MITSUBISHI ELECTRIC

AIR-COOLED SPLIT-TYPE DUCTED AIR CONDITIONERS

Series

COOLING ONLY PE-7,8,10

HEAT PUMP PEH-7,8,10

DATA BOOK

Warning Don't change this databook without permission.

HOW TO USE THIS DATA BOOK

Tools and buttons

The toolbar contains tools for selecting and viewing documents. Select a tool by clicking the tool icon. To hide or show the toolbar, choose Hide Toolbar or Show Toolbar from the Window menu.

The toolbar contains the following tools and buttons:

Click the **Page Only** button to close the overview area of the window.

Click the **Bookmarks and Page** button to open the overview area and display bookmarks created for the document. Click a bookmark's name to go to the location marked by that bookmark.

Click the **Thumbnails and Page** button to open the overview area and display thumbnail images of each document page. Click a thumbnail to go to the page marked by that thumbnail.

Use the **hand** tool to move a document page on-screen when it does not fit within the window. Drag the hand tool in the direction you want to move the page.


Use the **zoom** tools to magnify and reduce the page display by a factor of 2.

Use the **select text** tool to select text in a document, which can then be copied to the Clipboard by using the Copy command. Choose Select Graphics from the Tools menu to select graphics in a document.


Use the **Previous Page** or **Next Page** button to move the document backward or forward, one page at a time.


Use the **First Page** or **Last Page** button to move the document to the first or last page of a document.


Use the **Go Back** and **Go Forward** buttons to retrace your steps in a document, moving to each view in the order visited. Go Back also returns you to the original document after you click a link to another document.

Using notes

When you encounter a note in a PDF document, double-click it to open the note window. To find the next note in the document, choose Find Next Note from the Tools menu.
To close the note window, click the close box in the upper left corner of the note.

On detail you can see the online Guide of Acrobat reader.

CONTENTS

SAFETY FOR USE

Before conducting installation work, please read this “SAFETY FOR USE” carefully for correct installation.
Since the caution items shown here contain important description relative to safety, please observe them without fail.

⚠ **Warning**	Erroneous handling gives a high possibility to induce serious results such as death or heavy injury.
⚠ **Caution**	Erroneous handling may induce serious injury depending on the situation.

After reading, please keep it with you together the Instruction Manual, and read it again at the movement of the unit.

⚠ Warning

The unit should not be installed by the user.
If the unit is installed improperly, explosion, water leakage, electric shock or fire may be result.
Consult your dealer or specialist subcontractor for repair and movement.

For installation, conduct the work correctly by following the Installation Manual.
Improper installation may cause a fire, electrical shock or water leakage.

Install the unit on a spot sufficiently durable against the unit weight.
Insufficient durability can cause an injury by the falling down of unit.

All electric work must be performed by licensed technician, according to local regulations and the instructions given in this manual.
The units should be powered by dedicated power lines.
Power lines with insufficient capacity or improper electrical work may result in electric shock or fire.

Use only the specified cables for wiring. The connections must be made secured without tension the terminals.
Improper connection or fastening can cause a fire or electrical shock.

The unit should be installed according to the instructions in order to minimize the risk of damage from earthquakes, typhoons or strong winds.
Improper installation work can cause an injury by the falling down of the unit.

The outdoor unit must be installed on stable, flat surface, in a place where there is no accumulation of snow , leaves or rubbish.
The outdoor unit should be installed in a location where air and noise emitted by the unit will not disturb the neighbors. The indoor unit should be securely installed.
If the unit is loosely mounted, it may fall, and cause injury.

Never repair the unit, remodel or transfer it to another site by yourself.
If they are performed improperly, water leakage, electric shock or fire may result. If you need to have the unit repaired or moved, consult your dealer.

Use only the specified refrigerant (R-22) to charge the refrigerant circuit.
Do not mix it with any other refrigerant and do not allow air to remain in the circuit.
Air enclosed in the circuit can cause high pressure resulting in a rupture and other hazards.

Ventilate the room if refrigerant leaks during Installation.
The refrigerant heated generates poisonous gas by decomposition which can cause poisoning.

After completing installation work, make sure that refrigerant gas has not leaked.
If refrigerant gas has leaked and exposed to fan heater, stove, oven and so on, it may generate noxious gases.

Take a proper measure to suppress the critical concentration of refrigerant if leaked when installing the unit in a small room.
The limit density is made not to be exceeded even if the refrigerant leaks by any chance.
You are necessary to ventilation measures to prevent the accident. If the refrigerant leaks, hypoxia accident may caused.
For the countermeasure to be taken, consult your dealer.

The terminal block cover of unit must be firmly attached to prevent entry of dust and moisture.
Improper mounting of the cover cause electric shock or fire.

Use only optional parts authorised by Mitsubishi Electric.
If the accessories are installed improperly, water leakage, electric shock or fire may result.
Ask your dealer or an authorised company to install them.

⚠ Caution

Refrain from installing the unit in an area where flammable gas can accumulate around the unit.
If the flammable gas can accumulate around the unit, an explosion can occur.

When the unit is installed at telecommunication centers or hospitals, take a proper provision against noise.
The erroneous operation of air conditioner may be induced by inverter equipment, independent power device, medical equipment or communication equipment.
While the erroneous operation of medical equipment or communication equipment may caused by the air conditioner.

For special use as for foods, animals/plants, precision equipment or art objects, the applicability should be confirmed beforehand.
As the use for the applications other than that designed originally may result in the deterioration of the quality. Consult your dealer in this regard.

Do not use the unit under a special atmosphere.
Installing the unit at the following places may cause a trouble, a place where much machine oil, salt sonnet, humidity or dust, spa district, a place full of sulfur gas, volatile gas, or corrosive gas, a place near high frequency processing machine.

Thermal insulation of the drain pipes is necessary prevent dew condensation.
If the drain pipes are not properly insulated, condensation will result and drip on ceiling, floor or other possessions.

The drain piping must process by surely,and insulate the drain piping not to be dewy.
When the room humidity exceeds 80% or when the drain pipe is clogged, water may drip from the indoor unit. The outdoor unit produces condensation during the heating operation.
Make sure to provide drainage around the outdoor unit if such condensation is likely to cause damage.

Install drain piping according to this Installation Manual to ensure proper drainage.
Place thermal insulation on the pipes to prevent condensation.
Improper drain piping may cause water leakage and damage to furniture or other possessions.

The unit must be properly earth connected.
Do not connect the earth wire to gas pipe, city water pipe, lightning rod or telephone earth wire.
Improper earth connection may cause electrical shock.

When installing at a watery place, provide an electric leak breaker.
Failure to mount the electric leak breaker may cause electrical shock.

Use breaker or fuse with proper capacity.
Make sure that there is a main power switch.
Using a wire or a copper wire instead of proper capacity of fuse can cause fire or trouble.
Other appliances connected to the same line could cause an overload.

For the power lines, use standard cables of sufficient current capacity.
Otherwise, current leakage, overheating or fire may occur.

When installing the power lines, do not apply tension to the cables.
The tighten or loosen the connections may cause generate heat and cause fire.

Arrange the configuration of wiring not to bring up the panel and terminal cover, and fasten the panel and terminal cover securely.
The poor mounting of the panel or terminal cover may cause the heat generation of the terminal connection, a fire or electrical shock.

Do not wash the unit with water.
If washed with water, electrical shock may be caused.

Do not handle the switch with wet hands.
Otherwise electrical shock can be resulted.

Be very careful on handling the unit.
When carrying in outdoor unit, be sure to support it at four points.
Carrying in and lifting with 3-point support may make outdoor unit unstable, resulting in a fall of it.
The unit should not be carried by only one person if it is more than 20kg.
Some units use PP bands for packing.
Do not use any PP band for delivery purpose.
Do not touch the heat exchanger fins with your bear hands.
Doing so may cut your hands.
Be sure to safely dispose the packaging materials.
Packaging materials, such as catches and other metal or wooden parts, may cause stabs or other injuries.
Tear off and discard plastic packing bags so that children will not play any of them.
If children play with a plastic bag which was not torn off, it may cause a risk of suffocation.

The base and attachments of the unit should be periodically checked for looseness, cracks or other damage.
If such defects are left uncorrected, the unit may fall and cause personal injury or property damage.

Turn on the main power switch more than 6 hours before starting operation.
Do not turn the main power switch OFF during seasons of heavy use, doing so can result In failure.

Do not touch the compressor or refrigerant piping without wearing glove on your hands.
Touching directly such part can cause a burn or frostbite as it becomes high or low temperature according to the refrigerant state.

Do not touch the metal edges inside the unit without wearing glove on your hands.
Touching directly it may injure your hands.

Do not remove the front panel or the fan guard from the outdoor unit when it is running.
You could be injured if you touch rotating, hot or high-voltage parts.

Do not operate the air conditioner without the air filter set place.
Dust may accumulate, and cause a failure.

At emergency (if you smell something burning), stop operation and turn the power source switch off.
Continuing the operation without eliminating the emergency state may cause a machine trouble, fire, or electrical shock.

After stopping operation, be sure to wait for five minutes before turning off the main power switch.
Otherwise, water leakage or unit failure may occur.

A COMPLETE LINE UP

		PE(H)-7	PE(H)-8	PE(H)-10
Cooling capacity	kcal/h	15,400	18,900	24,800
	BTU/h	61,000	75,100	98,300
	kW	17.9	22.0	28.8
Heating capacity (PEH only)	kcal/h	15,600	18,900	24,800
	BTU/h	61,800	75,100	98,300
	kW	18.1	22.0	28.8

Note: Cooling & heating capacities are based following conditions.
Cooling: Indoor:27℃DB, 19 ℃WB; Outdoor: 35 ℃DB
Heating: Indoor:21℃DB; Outdoor: 7 ℃DB, 6 ℃DB (PEH only)
Cooling and Heating capacities are based 5m pipe length

Indoor unit

Outdoor unit

FEATURES

High sensible cooling capacity.

The sensible cooling capacity has been significantly improved through balanced optimised heat exchanger design.

Comfort heating. (PEH only)

The PEH series are designed to provide effective heating even when the outside temperature is down to -10℃.

Highly efficient operation.

The EER(Energy Efficiency Ratio) on these models is greatly improved by revised design specifications and by being manufactured stringently to Mitsubishi Electric high quality standards.

Labour saving installation.

The unit operation can commence immediately after connection to the power supply, refrigerant piping, drain piping, ducting and control system.

Low ambient cooling.

In applications with relatively high internal loads, there may be a requirement for the PE(H) series to operate on cooling at low ambient conditions.
Special order parts is available to maintain the refrigeration circuit in balance at outdoor temperatures as low as -5℃.
Please consult your local Mitsubishi Electric Sales office for application advice on these parts.

Wide electrical control capability.

The PE(H)-K series may be ordered in either or of two control configurations.
The factory standard is for provision of 24 volt terminal block to enable a field wired control of the contractors choice to be connected.
Alternatively, for models PE(H)-7,8,10 the intelligent "K" series remote control system may be ordered.
The K control utilises a microprocessor and includes liquid crystal display with touch pad for adjustment of control parameters.
These special parts give the flexibility to enable connection to building management system, smoke spill cycles, economy cycles, remote monitoring etc.
Please consult your local Mitsubishi Electric Sales office for application advice on these control.

DESCRIPTIONS

Mitsubishi Electric air conditioners series PE(H)/PU(H) are available in a wide range of sizes and models to enables the designer to select the best model for each application.
Series PE(H)/PU(H)-7,8,10 units are completely assembled, wired and strictly tested at the factory.

With the development of PE(H)/PU(H) series demands for such features as light weight, compactness, increased capacity, appropriate static pressure, air flow control, and having flexibility of inter facing energy saving electronic controls, Mitsubishi Electric have met market expectations.

MECHANICAL SPECIFICATIONS

General

All units are factory assembled, piped, internally wired. They are also tested and checked under a strict quality control system in the factory.
Exterior surfaces of all units of outdoor unit are phosphatized, zinc-coated steel with powder coating and ivory white baked enamel finish.

Refrigeration Controls

Refrigeration controls include condenser fan, evaporator fan and compressor contactors.

Compressors

All units have high efficiency type hermetic line starting compressors.
Compressors are equipped with thermal overload protector, over-current relay and high pressure protection control.
Crankcase heaters are standard.

Evaporator Coils

Highly efficient cross-finned coil are applied to provide a larger cooling capacity with low air speed on the coil.
Coils are made of 9.52mm OD and 0.35mm thick seamless copper tubing mechanically bonded to 0.12mm thick aluminium fins and are factory leak tested at a pressure of 3.3MPa. They are provided with strainers attached to the capillary tubes to further ensure a clean system.

Condenser Coils

Unnecessary power input due to higher discharge pressure is avoided by high performance designs of cross-finned coil.
Condenser coils are made of 9.52mm OD, 0.35mm thick seamless copper tubes mechanically bonded to 0.12mm thick aluminium fins and factory pressure and leak tested at 3.3MPa.

Evaporator Fans

The sirocco direct-drive fans are made of galvanised steel and balanced to proved accurate air flow performance at low noise level.

Condenser Fan

The direct-drive propeller fan is dynamically balanced, to ensure smooth airflow.
A weatherproof three-phase squirrel cage induction motor is used to drive the condenser fan.

TYPICAL INSTALLATION EXAMPLE

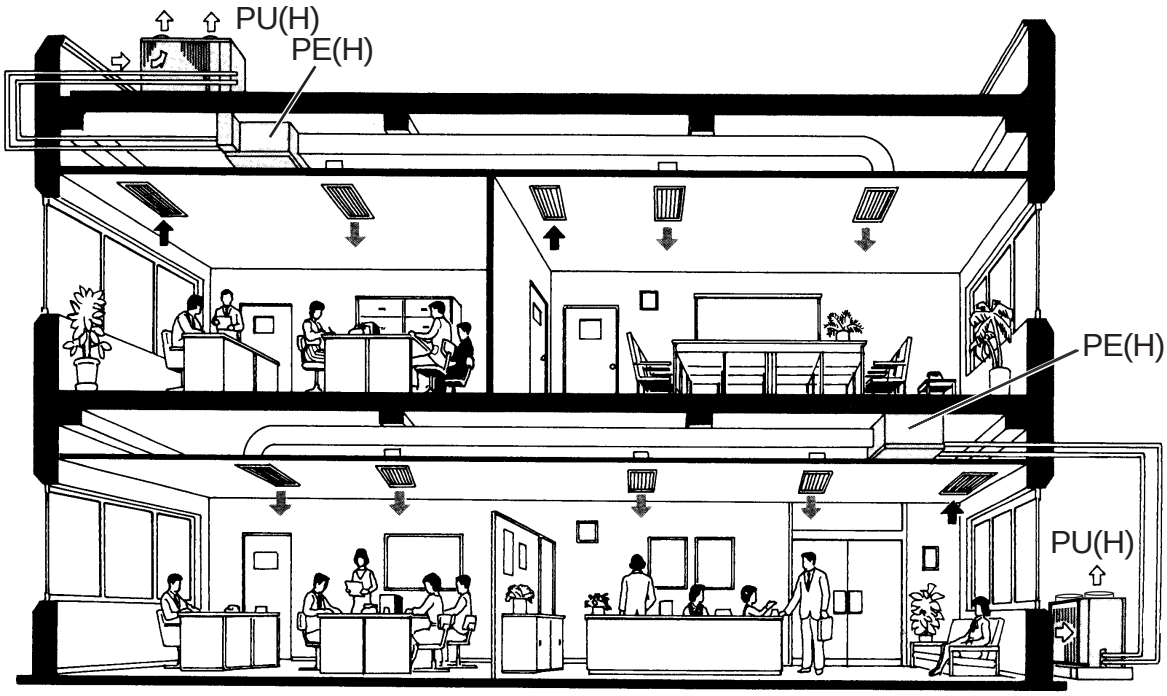

SPECIFICATIONS

PE-7,8,10MYC(-K)

COOLING ONLY

ITEM			PE-7MYC(-K) PU-7MYC	PE-8MYC(-K) PU-8MYC	PE-10MYC(-K) PU-10MYC
POWER SUPPLY	INDOOR		1PH 2W220/240V 50Hz	3PH 4W380/415V 50Hz	3PH 4W380/415V 50Hz
	OUTDOOR		3PH 4W380/415V 50Hz	3PH 4W380/415V 50Hz	3PH 4W380/415V 50Hz
TOTAL COOLING CAPACITY (GROSS)		kW	17.9	22.0	28.8
		BTU/H	61,100	75,100	98,300
		kcal/h	15,400	18,900	24,800
SENSIBLE COOLING CAPACITY (GROSS)		kW	14.3	17.6	23.0
		BTU/H	48,800	60,100	78,500
		kcal/h	12,300	15,100	19,800
CAPACITY STEPS		%	0-100		
REFRIGERANT			R-22		
REFRIGERANT CONTROL			CAPILLARY TUBE		
INDOOR UNIT			PE-7MYC(-K)	PE-8MYC(-K)	PE-10MYC(-K)
EXTERNAL FINISH			GALVANIZED STEEL		
DIMENSION	HEIGHT	mm	428		
	WIDTH	mm	1,415		1,615
	DEPTH	mm	650		
NET WEIGHT		kg	67	70	84
INDOOR COIL			CROSS FIN		
FAN			CENTRIFUGAL (GALVANIZED STEEL) -DIRECT DRIVE		
FAN MOTOR			SINGLE PHASE MOTOR	THREE PHASE CAGE INDUCTION MOTOR	
MOTOR OUTPUT		kW	0.21	0.7	1.0
AIR FLOW		CMM	60	70	90
		CFM	2,119	2,472	3,179
		L/S	1,000	1,167	1,500
EXTERNAL STATIC PRESSURE		mmAq	12.5		
		Pa	125		
DRAIN CONNECTION		mm	25.4		
OUTDOOR UNIT			PU-7MYC	PU-8MYC	PU-10MYC
EXTERNAL FINISH			ACRYLIC RESIN COATING		
COLOR			MUNSELL 5Y 8/1		
DIMENSION	HEIGHT	mm	980		
	WIDTH	mm	1,400		
	DEPTH	mm	700		
NET WEIGHT		kg	202	205	230
COMPRESSOR			HERMETIC LINE START (RECIPROCATING)		
MOTOR OUTPUT		kW	5.5		7.5
OUTDOOR COIL			CROSS FIN		
FAN			PROPELLER -DIRECT DRIVE		
FAN MOTOR			THREE PHASE CAGE INDUCTION MOTOR		
FAN MOTOR OUTPUT		kW	0.09X2	0.15X2	0.15X2
AIR FLOW		CMM	190	210	220
		CFM	6,711	7,415	7,770
		L/S	3,167	3,000	3,667
PROTECTION DEVICES			HIGH PRESSURE SWITCH, FREEZE PROTECTION, FUSE OVER CURRENT RELAY (COMP & INDOOR FAN, OUTDOOR FAN) INTERNAL THERMOSTAT (COMP & INDOOR FAN, OUTDOOR FAN)		

NOTICE 1. COOLING CAPACITY IS BASED FOLLOWING CONDITIONS.
INDOOR:27℃ DB, 19℃ WB ;OUTDOOR :35℃ DB
CAPACITY IS BASED 5M PIPE LENGTH.
2. CAPACITIES ARE GROSS CAPACITIES WHICH DO NOT INCLUDE A DEDUCTION FOR EVAPORATOR FAN MOTOR HEAT.
3. SPECIFICATION SUBJECT TO CHANGE WITHOUT NOTICE.

PEH-7,8,10MYA(-K)

HEAT PUMP

ITEM			PEH-7MYA(-K) PUH-7MYC	PEH-8MYA(-K) PUH-8MYC	PEH-10MYA(-K) PUH-10MYC
POWER SUPPLY	INDOOR		1PH 2W220/240V 50Hz	3PH 4W380/415V 50Hz	3PH 4W380/415V 50Hz
	OUTDOOR		3PH 4W380/415V 50Hz	3PH 4W380/415V 50Hz	3PH 4W380/415V 50Hz
TOTAL COOLING CAPACITY (GROSS)		kW	17.9	22.0	28.8
		BTU/H	61,100	75,100	98,300
		kcal/h	15,400	18,900	24,800
SENSIBLE COOLING CAPACITY (GROSS)		kW	14.3	17.6	23.0
		BTU/H	48,800	60,100	78,500
		kcal/h	12,300	15,100	19,800
TOTAL HEATING CAPACITY (GROSS)		kW	18.8	22.0	28.8
		BTU/H	64,100	75,100	98,300
		kcal/h	16,200	18,900	24,800
CAPACITY STEPS		%	0-100		
REFRIGERANT			R-22		
REFRIGERANT CONTROL			CAPILLARY TUBE		
INDOOR UNIT			PEH-7MYA(-K)	PEH-8MYA(-K)	PEH-10MYA(-K)
EXTERNAL FINISH			GALVANIZED STEEL		
DIMENSION	HEIGHT	mm	428		
	WIDTH	mm	1,415		1,615
	DEPTH	mm	650		
NET WEIGHT		kg	67	70	84
INDOOR COIL			CROSS FIN		
FAN			CENTRIFUGAL (GALVANIZED STEEL) -DIRECT DRIVE		
FAN MOTOR			SINGLE PHASE MOTOR	THREE PHASE CAGE INDUCTION MOTOR	
MOTOR OUTPUT		kW	0.21	0.7	1.0
AIR FLOW		CMM	60	70	90
		CFM	2,119	2,472	3,179
		L/S	1,000	1,167	1,500
EXTERNAL STATIC PRESSURE		mmAq	12.5		
		Pa	125		
DRAIN CONNECTION		mm	25.4		
OUTDOOR UNIT			PUH-7MYC	PUH-8MYC	PUH-10MYC
EXTERNAL FINISH			ACRYLIC RESIN COATING		
COLOR			MUNSELL 5Y 8/1		
DIMENSION	HEIGHT	mm	980		
	WIDTH	mm	1,400		
	DEPTH	mm	700		
NET WEIGHT		kg	211	214	240
COMPRESSOR			HERMETIC LINE START (RECIPROCATING)		
MOTOR OUTPUT		kW	5.5		7.5
OUTDOOR COIL			CROSS FIN		
FAN			PROPELLER -DIRECT DRIVE		
FAN MOTOR			THREE PHASE CAGE INDUCTION MOTOR		
FAN MOTOR OUTPUT		kW	0.09X2	0.09X2	0.15X2
AIR FLOW		CMM	167	167	190
		CFM	5,898	5,898	6,711
		L/S	2,783	2,783	3,167
PROTECTION DEVICES			HIGH PRESSURE SWITCH, FREEZE & FROST PROTECTION, FUSE OVER CURRENT RELAY (COMP & INDOOR FAN, OUTDOOR FAN) INTERNAL THERMOSTAT (COMP & INDOOR FAN, OUTDOOR FAN)		

NOTICE 1. COOLING & HEATING CAPACITIES ARE BASED FOLLOWING CONDITIONS.
COOLING : INDOOR :27 ℃ DB;19 ℃ WB;OUTDOOR :35℃DB
HEATING : INDOOR :21 ℃DB; OUTDOOR :7 ℃ DB,6℃WB
COOLING AND HEATING CAPACITIES ARE BASED 5M PIPE LENGTH.

2. CAPACITIES ARE GROSS CAPACITIES WHICH DO NOT INCLUDE A DEDUCTION FOR EVAPORATOR FAN MOTOR HEAT.

3. SPECIFICATION SUBJECT TO CHANGE WITHOUT NOTICE.

ELECTRICAL DATA

COOLING

VOLT	ITEM		PE-7MYC(-K) PEH-7MYA(-K)	PE-8MYC(-K) PEH-8MYA(-K)	PE-10MYC(-K) PEH-10MYA(-K)
PE(H)-7 240V PE(H)-8,10 415V	TOTAL INPUT	kW	7.2	7.8	10.1
	TOTAL RUN CURRENT	A	14.6	14.2	18.9
	POWER FACTOR	%	-	74%	74%
	START CURRENT	A	74	83	82
	COMPRESSOR INPUT	kW	6.0	6.8	8.6
	RUN CURRENT	A	10.7	12.3	15.9
	INDOOR FAN INPUT	kW	0.8	0.6	1.0
	RUN CURRENT	A	3.2	1.2	2.0
	OUTDOOR FAN INPUT	kW	0.4	0.4	0.5
	RUN CURRENT	A	0.7	0.7	1.0
PE(H)-7 220V PE(H)-8,10 380V	TOTAL INPUT	kW	7.2	7.8	10.1
	TOTAL RUN CURRENT	A	15.9	15.5	20.7
	POWER FACTOR	%	-	74%	74%
	START CURRENT	A	81	91	90
	COMPRESSOR INPUT	kW	6.0	6.8	8.6
	RUN CURRENT	A	11.6	13.4	17.6
	INDOOR FAN INPUT	kW	0.8	0.6	1.0
	RUN CURRENT	A	3.5	1.3	2.1
	OUTDOOR FAN INPUT	kW	0.4	0.4	0.5
	RUN CURRENT	A	0.8	0.8	1.0

HEATING (PEH only)

VOLT	ITEM		PEH-7MYA(-K)	PEH-8MYA(-K)	PEH-10MYA(-K)
PEH-7 240V PEH-8,10 415V	TOTAL INPUT	kW	6.3	6.5	8.3
	TOTAL RUN CURRENT	A	13.6	12.4	16.0
	POWER FACTOR	%	-	72%	73%
	START CURRENT	A	74	83	82
	COMPRESSOR INPUT	kW	5.1	5.5	6.8
	RUN CURRENT	A	9.7	10.5	13.0
	INDOOR FAN INPUT	kW	0.8	0.6	1.0
	RUN CURRENT	A	3.2	1.2	2.0
	OUTDOOR FAN INPUT	kW	0.4	0.4	0.5
	RUN CURRENT	A	0.7	0.7	1.0
PEH-7 220V PEH-8,10 380V	TOTAL INPUT	kW	6.3	6.5	8.3
	TOTAL RUN CURRENT	A	14.9	13.6	17.5
	POWER FACTOR	%	-	72%	73%
	START CURRENT	A	81	91	90
	COMPRESSOR INPUT	kW	5.1	5.5	6.8
	RUN CURRENT	A	10.6	11.5	14.4
	INDOOR FAN INPUT	kW	0.8	0.6	1.0
	RUN CURRENT	A	3.5	1.3	2.1
	OUTDOOR FAN INPUT	kW	0.4	0.4	0.5
	RUN CURRENT	A	0.8	0.8	1.0

CAPACITY TABLES

Cooling Capacity (Air Flow)
PE-7MYC(-K), PEH-7MYA(-K)

		OUTDOOR DB ℃																							
INDOOR	INDOOR	20.0				25.0				30.0				35.0				40.0				46.0			
DB℃	WB℃	Q kW	SHC kW	SHF	T/I kW	Q kW	SHC kW	SHF	T/I kW	Q kW	SHC kW	SHF	T/I kW	Q kW	SHC kW	SHF	T/I kW	Q kW	SHC kW	SHF	T/I kW	Q kW	SHC kW	SHF	T/I kW
20	15	16.9	11.7	0.72	5.4	16.5	11.5	0.72	5.7	15.8	11.1	0.73	6.1	15.1	10.8	0.74	6.6	14.3	10.4	0.76	7.1	13.6	10.1	0.77	7.8
	16	17.7	10.8	0.63	5.5	17.2	10.5	0.64	5.8	16.5	10.2	0.64	6.2	15.8	9.9	0.65	6.7	15.0	9.5	0.66	7.2	14.2	9.1	0.67	7.9
	17	18.4	9.6	0.55	5.6	17.9	9.4	0.55	5.9	17.2	9.1	0.56	6.3	16.5	8.8	0.56	6.8	15.7	8.5	0.57	7.4	14.8	8.0	0.57	8.0
22	15	16.9	13.5	0.83	5.4	16.5	13.3	0.83	5.7	15.8	13.0	0.85	6.1	15.1	12.7	0.87	6.6	14.3	12.4	0.90	7.1	13.6	12.1	0.92	7.8
	16	17.7	12.8	0.75	5.5	17.2	12.5	0.75	5.8	16.5	12.2	0.77	6.2	15.8	11.9	0.78	6.7	15.0	11.6	0.80	7.2	14.2	11.2	0.82	7.9
	17	18.4	11.8	0.67	5.6	17.9	11.6	0.67	5.9	17.2	11.3	0.68	6.3	16.5	11.0	0.69	6.8	15.7	10.7	0.71	7.4	14.8	10.3	0.72	8.0
	18	19.3	10.9	0.59	5.7	18.7	10.6	0.59	6.0	18.0	10.4	0.60	6.5	17.2	10.0	0.61	6.9	16.5	9.8	0.62	7.5	15.5	9.4	0.63	8.1
	19	19.9	9.7	0.51	5.8	19.3	9.4	0.51	6.2	18.7	9.2	0.52	6.6	17.9	8.9	0.52	7.1	17.0	8.6	0.53	7.6	16.0	8.2	0.54	8.2
24	16	17.7	15.0	0.87	5.5	17.2	14.7	0.88	5.8	16.5	14.5	0.90	6.2	15.8	14.1	0.92	6.7	15.0	13.8	0.95	7.2	14.2	13.4	0.97	7.9
	17	18.4	14.0	0.78	5.6	17.9	13.7	0.79	5.9	17.2	13.4	0.81	6.3	16.5	13.1	0.82	6.8	15.7	12.8	0.84	7.4	14.8	12.4	0.87	8.0
	18	19.3	12.9	0.69	5.7	18.7	12.7	0.70	6.0	18.0	12.4	0.71	6.5	17.2	12.0	0.72	6.9	16.5	11.8	0.74	7.5	15.5	11.4	0.76	8.1
	19	19.9	11.8	0.61	5.8	19.3	11.6	0.62	6.2	18.7	11.4	0.63	6.6	17.9	11.1	0.64	7.1	17.0	10.7	0.66	7.6	16.0	10.3	0.67	8.2
	20	21.2	10.9	0.54	6.0	20.4	10.6	0.54	6.3	19.7	10.4	0.55	6.7	18.8	10.1	0.56	7.2	17.9	9.8	0.57	7.8	16.9	9.4	0.58	8.4
	21	22.0	9.7	0.46	6.1	21.2	9.4	0.46	6.4	20.5	9.2	0.47	6.8	19.6	9.0	0.48	7.3	18.7	8.7	0.49	7.9	17.6	8.2	0.49	8.5
26	18	19.3	15.0	0.80	5.7	18.7	14.7	0.81	6.0	18.0	14.5	0.83	6.5	17.2	14.0	0.84	6.9	16.5	13.9	0.87	7.5	15.5	13.4	0.89	8.1
	19	19.9	13.9	0.72	5.8	19.3	13.6	0.73	6.2	18.7	13.4	0.74	6.6	17.9	13.1	0.76	7.1	17.0	12.8	0.78	7.6	16.0	12.3	0.80	8.2
	20	21.2	13.1	0.64	6.0	20.4	12.7	0.64	6.3	19.7	12.5	0.66	6.7	18.8	12.2	0.67	7.2	17.9	11.9	0.69	7.8	16.9	11.4	0.70	8.4
	21	22.0	12.1	0.57	6.1	21.2	11.7	0.57	6.4	20.5	11.5	0.58	6.8	19.6	11.3	0.60	7.3	18.7	10.9	0.61	7.9	17.6	10.4	0.62	8.5
	22	22.8	11.0	0.50	6.2	22.1	10.7	0.50	6.5	21.3	10.5	0.51	6.9	20.4	10.2	0.52	7.4	19.5	9.8	0.53	8.0	18.4	9.4	0.53	8.6
	23	23.7	9.9	0.43	6.3	23.0	9.5	0.43	6.7	22.1	9.3	0.44	7.1	21.2	9.0	0.45	7.6	20.3	8.6	0.45	8.1	19.2	8.1	0.45	8.8
28	19	19.9	15.9	0.82	5.8	19.3	15.8	0.84	6.2	18.7	15.7	0.86	6.6	17.9	15.4	0.88	7.1	17.0	15.0	0.91	7.6	16.0	14.5	0.93	8.2
	20	21.2	15.3	0.74	6.0	20.4	15.0	0.76	6.3	19.7	14.8	0.77	6.7	18.8	14.5	0.79	7.2	17.9	14.1	0.81	7.8	16.9	13.6	0.83	8.4
	21	22.0	14.1	0.66	6.1	21.2	13.8	0.67	6.4	20.5	13.6	0.69	6.8	19.6	13.3	0.70	7.3	18.7	13.0	0.72	7.9	17.6	12.4	0.73	8.5
	22	22.8	13.1	0.59	6.2	22.1	12.9	0.60	6.5	21.3	12.6	0.61	6.9	20.4	12.4	0.63	7.4	19.5	12.1	0.64	8.0	18.4	11.7	0.66	8.6
	23	23.7	12.0	0.53	6.3	23.0	11.8	0.53	6.7	22.1	11.5	0.54	7.1	21.2	11.3	0.55	7.6	20.3	11.1	0.57	8.1	19.2	10.7	0.58	8.8
	24	24.7	10.9	0.46	6.5	24.0	10.6	0.46	6.8	23.1	10.4	0.47	7.2	22.2	10.1	0.48	7.7	21.2	10.0	0.49	8.2	20.0	9.7	0.51	8.9
30	20	21.2	17.2	0.83	6.0	20.4	16.7	0.84	6.3	19.7	16.5	0.86	6.7	18.8	16.1	0.88	7.2	17.9	16.0	0.92	7.8	16.9	15.7	0.95	8.4
	21	22.0	16.2	0.76	6.1	21.2	15.8	0.77	6.4	20.5	15.6	0.78	6.8	19.6	15.3	0.80	7.3	18.7	15.1	0.83	7.9	17.6	14.6	0.86	8.5
	22	22.8	15.1	0.68	6.2	22.1	14.8	0.69	6.5	21.3	14.6	0.71	6.9	20.4	14.3	0.72	7.4	19.5	14.0	0.74	8.0	18.4	13.6	0.76	8.6
	23	23.7	14.2	0.62	6.3	23.0	14.1	0.63	6.7	22.1	13.7	0.64	7.1	21.2	13.4	0.65	7.6	20.3	13.2	0.67	8.1	19.2	12.8	0.69	8.8
	24	24.7	13.2	0.55	6.5	24.0	13.0	0.56	6.8	23.1	12.8	0.57	7.2	22.2	12.5	0.58	7.7	21.2	12.2	0.60	8.2	20.0	11.8	0.61	8.9

* Q: COOLING CAPACITY SHC: SENSIBLE HEAT CAPACITY T/I: TOTAL INPUT

Factor for Various Air Flow

PE-7MYC(-K) PEH-7MYA(-K)	AIR VOLUME	CMM	50	60	70
		L/S	830	1,000	1,167
COOLING	CAPACITY		0.975	1.0	1.024
	TOTAL INPUT		0.989	1.0	1.009
	SHC		0.964	1.0	1.040

Cooling Capacity (Air Flow)
(Use for low ambient cooling parts)
PE-7MYC(-K), PEH-7MYA(-K)

		OUTDOOR DB℃																			
INDOOR	INDOOR	-5.0				0.0				5.0				10.0				15.0			
DB℃	WB℃	Q kW	SHC kW	SHF	T/I kW	Q kW	SHC kW	SHF	T/I kW	Q kW	SHC kW	SHF	T/I kW	Q kW	SHC kW	SHF	T/I kW	Q kW	SHC kW	SHF	T/I kW
20	15	17.8	12.1	0.70	4.8	17.8	12.1	0.70	4.8	17.7	12.0	0.70	4.8	17.5	11.9	0.71	4.9	17.3	11.9	0.71	5.1
	16	18.8	11.3	0.62	4.9	18.8	11.3	0.62	4.9	18.7	11.2	0.62	4.9	18.5	11.1	0.62	5.0	18.1	10.9	0.63	5.2
	17	19.7	10.2	0.54	5.0	19.8	10.3	0.54	5.0	19.7	10.2	0.54	5.0	19.4	10.1	0.54	5.1	19.0	9.9	0.54	5.3
22	15	17.8	14.0	0.81	4.8	17.8	14.1	0.82	4.8	17.7	14.1	0.82	4.8	17.5	14.0	0.82	4.9	17.3	13.8	0.82	5.1
	16	18.8	13.3	0.73	4.9	18.8	13.4	0.73	4.9	18.7	13.3	0.74	4.9	18.5	13.2	0.74	5.0	18.1	13.0	0.74	5.2
	17	19.7	12.4	0.65	5.0	19.8	12.5	0.65	5.0	19.7	12.4	0.65	5.0	19.4	12.3	0.66	5.1	19.0	12.1	0.66	5.3
	18	20.7	11.6	0.58	5.1	20.7	11.6	0.58	5.0	20.5	11.5	0.58	5.1	20.3	11.4	0.58	5.2	19.9	11.2	0.59	5.4
	19	21.4	10.5	0.51	5.2	21.4	10.5	0.51	5.2	21.3	10.5	0.51	5.2	21.1	10.4	0.51	5.4	20.5	10.1	0.51	5.6
24	16	18.8	15.4	0.84	4.9	18.8	15.4	0.84	4.9	18.7	15.3	0.84	5.4	18.5	15.3	0.85	5.0	18.1	15.2	0.86	5.2
	17	19.7	14.5	0.76	5.0	19.8	14.5	0.76	5.0	19.7	14.5	0.76	5.0	19.4	14.4	0.76	5.1	19.0	14.2	0.77	5.3
	18	20.7	13.5	0.67	5.1	20.7	13.5	0.67	5.0	20.5	13.3	0.67	5.1	20.3	13.3	0.68	5.2	19.9	13.1	0.68	5.4
	19	21.4	12.4	0.60	5.2	21.4	12.4	0.60	5.2	21.3	12.4	0.60	5.2	21.1	12.3	0.60	5.4	20.5	12.0	0.61	5.6
	20	22.6	11.6	0.53	5.3	22.5	11.5	0.53	5.3	22.4	11.5	0.53	5.4	22.2	11.4	0.53	5.5	21.7	11.1	0.53	5.7
	21	23.4	10.4	0.46	5.4	23.4	10.4	0.46	5.4	23.3	10.3	0.46	5.5	23.0	10.1	0.46	5.6	22.5	9.8	0.46	5.8
26	18	20.7	15.5	0.77	5.1	20.7	15.5	0.77	5.0	20.5	15.4	0.77	5.1	20.3	15.4	0.78	5.2	19.9	15.3	0.79	5.4
	19	21.4	14.5	0.70	5.2	21.4	14.5	0.70	5.2	21.3	14.4	0.70	5.2	21.1	14.4	0.70	5.4	20.5	14.2	0.71	5.6
	20	22.6	13.6	0.62	5.3	22.5	13.6	0.62	5.3	22.4	13.5	0.62	5.4	22.2	13.5	0.63	5.5	21.7	13.3	0.63	5.7
	21	23.4	12.6	0.56	5.4	23.4	12.6	0.56	5.4	23.3	12.5	0.56	5.5	23.0	12.5	0.56	5.6	22.5	12.3	0.57	5.8
	22	24.3	11.5	0.49	5.5	24.3	11.5	0.49	5.5	24.2	11.5	0.49	5.6	23.8	11.4	0.50	5.7	23.5	11.4	0.50	5.9
	23	25.2	10.3	0.43	5.7	25.2	10.3	0.43	5.6	25.1	10.3	0.43	5.7	24.9	10.3	0.43	5.8	24.4	10.2	0.44	6.0
28	19	21.4	16.7	0.80	5.2	21.4	16.7	0.80	5.2	21.3	16.6	0.80	5.2	21.1	16.5	0.80	5.4	20.5	16.0	0.80	5.6
	20	22.6	15.9	0.72	5.3	22.5	15.8	0.72	5.3	22.4	15.7	0.72	5.4	22.2	15.6	0.72	5.5	21.7	15.3	0.73	5.7
	21	23.4	14.6	0.64	5.4	23.4	14.6	0.64	5.4	23.3	14.5	0.64	5.5	23.0	14.4	0.65	5.6	22.5	14.2	0.65	5.8
	22	24.3	13.7	0.58	5.5	24.3	13.7	0.58	5.5	24.2	13.6	0.58	5.6	23.8	13.5	0.58	5.7	23.5	13.3	0.59	5.9
	23	25.2	12.7	0.52	5.7	25.2	12.7	0.52	5.6	25.1	12.7	0.52	5.7	24.9	12.5	0.52	5.8	24.4	12.3	0.52	6.0
	24	26.0	11.6	0.46	5.8	26.0	11.6	0.46	5.8	26.1	11.6	0.46	5.8	25.8	11.4	0.46	6.0	25.4	11.2	0.46	6.2
30	20	22.6	17.7	0.80	5.3	22.5	17.6	0.80	5.3	22.4	17.5	0.80	5.4	22.2	17.6	0.81	5.5	21.7	17.4	0.82	5.7
	21	23.4	16.8	0.74	5.4	23.4	16.8	0.74	5.4	23.3	16.7	0.74	5.5	23.0	16.6	0.74	5.6	22.5	16.4	0.75	5.8
	22	24.3	15.9	0.67	5.5	24.3	15.9	0.67	5.5	24.2	15.8	0.67	5.6	23.8	15.5	0.67	5.7	23.5	15.3	0.67	5.9
	23	25.2	14.8	0.61	5.7	25.2	14.8	0.61	5.6	25.1	14.8	0.61	5.7	24.9	14.7	0.61	5.8	24.4	14.4	0.61	6.0
	24	26.0	13.6	0.54	5.8	26.0	13.6	0.54	5.8	26.1	13.7	0.54	5.8	25.8	13.5	0.54	6.0	25.4	13.3	0.54	6.2

* Q: COOLING CAPACITY SHC: SENSIBLE HEAT CAPACITY T/I: TOTAL INPUT

Factor for Various Air Flow

PE-7MYC(-K) PEH-7MYA(-K)	AIR VOLUME	CMM	50	60	70
		L/S	830	1,000	1,167
COOLING	CAPACITY		0.975	1.0	1.024
	TOTAL INPUT		0.989	1.0	1.009
	SHC		0.964	1.0	1.040

Heating Capacity (Air Flow)
PEH-7MYA(-K)

	OUTDOOR WB℃					
INDOOR	-10.0		-5.0		0.0	
DB℃	Q kW	T/I kW	Q kW	T/I kW	Q kW	T/I kW
15	11.0	5.3	13.0	5.7	15.4	6.1
16	11.2	5.3	13.3	5.7	15.6	6.1
17	10.8	5.4	12.9	5.7	15.3	6.2
18	10.7	5.4	12.8	5.8	15.2	6.2
19	10.5	5.5	12.7	5.8	15.1	6.2
20	10.5	5.5	12.7	5.8	15.1	6.3
21	10.5	5.5	12.6	5.9	15.0	6.3
22	10.4	5.5	12.6	5.9	15.0	6.4
23	10.3	5.5	12.5	5.9	14.9	6.4
24	10.3	5.5	12.4	6.0	14.8	6.5
25	10.3	5.5	12.5	6.0	14.9	6.5
26	10.1	5.5	12.3	6.0	14.6	6.5
27	10.1	5.6	12.2	6.0	14.5	6.6

	OUTDOOR WB℃					
INDOOR	5.0		10		15.0	
DB℃	Q kW	T/I kW	Q kW	T/I kW	Q kW	T/I kW
15	18.0	6.6	20.9	7.1	24.1	7.7
16	18.3	6.6	21.2	7.2	24.3	7.8
17	17.9	6.7	20.8	7.3	23.9	7.9
18	17.9	6.7	20.7	7.3	23.9	8.0
19	17.7	6.8	20.5	7.4	23.7	8.1
20	17.7	6.8	20.5	7.4	23.7	8.2
21	17.7	6.9	20.5	7.5	23.6	8.3
22	17.6	6.9	20.5	7.6	23.6	8.3
23	17.5	7.0	20.4	7.7	23.5	8.4
24	17.5	7.1	20.3	7.7	23.4	8.5
25	17.5	7.1	20.3	7.8	23.4	8.6
26	17.3	7.2	20.1	7.9	23.2	8.6
27	17.1	7.2	20.0	7.9	23.1	8.7

* Q : HEATING CAPACITY T/I : TOTAL INPUT

Factor for Various Air Flow

PEH-7MYA(-K)	AIR VOLUME	CMM	50	60	70
		L/S	830	1,000	1,167
HEATING	CAPACITY		0.980	1.0	1.011
	TOTAL INPUT		1.028	1.0	0.98

Cooling Capacity (Air Flow)
PE-8MYC(-K), PEH-8MYA(-K)

		OUTDOOR DB℃																							
INDOOR	INDOOR	20.0				25.0				30.0				35.0				40.0				46.0			
DB℃	WB℃	Q kW	SHC kW	SHF	T/I kW	Q kW	SHC kW	SHF	T/I kW	Q kW	SHC kW	SHF	T/I kW	Q kW	SHC kW	SHF	T/I kW	Q kW	SHC kW	SHF	T/I kW	Q kW	SHC kW	SHF	T/I kW
20	15	21.3	14.9	0.71	5.8	20.6	14.6	0.72	6.1	19.9	14.3	0.73	6.5	19.2	14.0	0.74	7.0	18.3	13.5	0.75	7.5	17.6	13.2	0.76	8.2
	16	22.0	13.7	0.63	5.9	21.3	13.4	0.64	6.2	20.6	13.0	0.64	6.6	19.9	12.6	0.65	7.1	19.1	12.4	0.66	7.6	18.3	12.1	0.67	8.3
	17	22.7	12.4	0.56	6.0	22.0	12.1	0.56	6.3	21.3	11.6	0.56	6.7	20.6	11.1	0.55	7.2	19.8	11.0	0.57	7.8	18.9	10.8	0.58	8.4
22	15	21.3	17.5	0.83	5.8	20.6	17.1	0.84	6.1	19.9	16.9	0.86	6.5	19.2	16.7	0.88	7.0	18.3	16.1	0.89	7.5	17.6	15.6	0.90	8.2
	16	22.0	16.1	0.74	5.9	21.3	15.9	0.76	6.2	20.6	15.6	0.77	6.6	19.9	15.3	0.78	7.1	19.1	14.9	0.79	7.6	18.3	14.5	0.81	8.3
	17	22.7	14.7	0.66	6.0	22.0	14.5	0.67	6.3	21.3	14.2	0.68	6.7	20.6	13.8	0.68	7.2	19.8	13.6	0.70	7.8	18.9	13.2	0.71	8.4
	18	23.5	13.6	0.59	6.1	22.8	13.4	0.60	6.4	22.1	13.1	0.60	6.9	21.3	12.7	0.61	7.3	20.6	12.5	0.62	7.9	19.5	12.1	0.63	8.5
	19	24.4	12.5	0.52	6.2	23.6	12.1	0.52	6.6	22.9	11.8	0.53	7.0	22.0	11.5	0.53	7.5	21.3	11.3	0.54	8.0	20.2	10.9	0.55	8.6
24	16	22.0	18.9	0.87	5.9	21.3	18.5	0.88	6.2	20.6	18.2	0.90	6.6	19.9	17.9	0.91	7.1	19.1	17.6	0.93	7.6	18.3	17.2	0.95	8.3
	17	22.7	17.7	0.79	6.0	22.0	17.3	0.80	6.3	21.3	17.0	0.81	6.7	20.6	16.7	0.82	7.2	19.8	16.4	0.84	7.8	18.9	16.0	0.86	8.4
	18	23.5	16.4	0.71	6.1	22.8	16.0	0.71	6.4	22.1	15.7	0.72	6.9	21.3	15.3	0.73	7.3	20.6	15.1	0.75	7.9	19.5	14.6	0.76	8.5
	19	24.4	15.1	0.63	6.2	23.6	14.7	0.63	6.6	22.9	14.4	0.64	7.0	22.0	14.0	0.65	7.5	21.3	13.8	0.66	8.0	20.2	13.3	0.67	8.6
	20	25.2	13.7	0.55	6.4	24.4	13.2	0.55	6.7	23.7	13.0	0.56	7.1	22.8	12.6	0.56	7.6	22.0	12.3	0.57	8.2	20.9	11.9	0.58	8.8
	21	26.1	12.1	0.47	6.5	25.3	11.7	0.47	6.8	24.5	11.4	0.47	7.2	23.7	11.1	0.48	7.7	22.8	10.8	0.48	8.3	21.7	10.4	0.49	8.9
26	18	23.5	18.8	0.81	6.1	22.8	18.4	0.81	6.4	22.1	18.1	0.83	6.9	21.3	17.8	0.84	7.3	20.6	17.5	0.86	7.9	19.5	16.9	0.87	8.5
	19	24.4	17.7	0.73	6.2	23.6	17.2	0.74	6.6	22.9	17.0	0.75	7.0	22.0	16.6	0.76	7.5	21.3	16.4	0.78	8.0	20.2	15.9	0.79	8.6
	20	25.2	16.3	0.65	6.4	24.4	16.0	0.66	6.7	23.7	15.8	0.67	7.1	22.8	15.4	0.68	7.6	22.0	15.2	0.70	8.2	20.9	14.7	0.71	8.8
	21	26.1	15.0	0.58	6.5	25.3	14.7	0.59	6.8	24.5	14.4	0.59	7.2	23.7	14.1	0.60	7.7	22.8	13.8	0.61	8.3	21.7	13.4	0.62	8.9
	22	27.0	13.5	0.51	6.6	26.2	13.3	0.51	6.9	25.4	13.0	0.52	7.3	24.4	12.6	0.52	7.8	23.6	12.3	0.53	8.4	22.4	11.8	0.53	9.0
	23	27.9	12.0	0.43	6.7	27.1	11.7	0.44	7.1	26.3	11.4	0.44	7.5	25.3	11.0	0.44	8.0	24.3	10.6	0.44	8.5	23.1	10.1	0.44	9.2
28	19	24.4	20.1	0.83	6.2	23.6	19.6	0.84	6.6	22.9	19.3	0.85	7.0	22.0	18.7	0.86	7.5	21.3	18.8	0.89	8.0	20.2	18.4	0.92	8.6
	20	25.2	18.9	0.76	6.4	24.4	18.5	0.77	6.7	23.7	18.2	0.78	7.1	22.8	17.7	0.79	7.6	22.0	17.7	0.81	8.2	20.9	17.4	0.84	8.8
	21	26.1	17.7	0.69	6.5	25.3	17.3	0.69	6.8	24.5	17.0	0.70	7.2	23.7	16.6	0.71	7.7	22.8	16.6	0.74	8.3	21.7	16.3	0.76	8.9
	22	27.0	16.4	0.62	6.6	26.2	16.0	0.62	6.9	25.4	15.7	0.63	7.3	24.4	15.3	0.64	7.8	23.6	15.2	0.65	8.4	22.4	14.8	0.67	9.0
	23	27.9	15.0	0.55	6.7	27.1	14.7	0.55	7.1	26.3	14.4	0.56	7.5	25.3	14.0	0.56	8.0	24.3	13.7	0.57	8.5	23.1	13.2	0.58	9.2
	24	28.8	13.5	0.48	6.9	28.0	13.2	0.48	7.2	27.1	12.9	0.48	7.6	26.0	12.4	0.49	8.1	25.2	12.1	0.49	8.6	23.9	11.5	0.49	9.3
30	20	25.2	21.6	0.87	6.4	24.4	21.3	0.88	6.7	23.7	21.0	0.90	7.1	22.8	20.5	0.91	7.6	22.0	20.2	0.93	8.2	20.9	19.4	0.94	8.8
	21	26.1	20.3	0.79	6.5	25.3	19.9	0.80	6.8	24.5	19.6	0.81	7.2	23.7	19.4	0.83	7.7	22.8	19.0	0.84	8.3	21.7	18.5	0.86	8.9
	22	27.0	18.8	0.71	6.6	26.2	18.4	0.71	6.9	25.4	18.2	0.73	7.3	24.4	17.9	0.74	7.8	23.6	17.7	0.76	8.4	22.4	17.3	0.78	9.0
	23	27.9	17.6	0.64	6.7	27.1	17.3	0.65	7.1	26.3	17.2	0.66	7.5	25.3	17.0	0.68	8.0	24.3	16.8	0.70	8.5	23.1	16.4	0.72	9.2
	24	28.8	16.2	0.57	6.9	28.0	16.0	0.58	7.2	27.1	16.1	0.60	7.6	26.0	15.9	0.62	8.1	25.2	15.9	0.64	8.6	23.9	15.6	0.66	9.3

* Q: COOLING CAPACITY SHC: SENSIBLE HEAT CAPACITY T/I: TOTAL INPUT

Factor for Various Air Flow

PE-8MYC(-K) PEH-8MYA(-K)	AIR VOLUME	CMM	60	70	80
		L/S	1,000	1,167	1,330
COOLING	CAPACITY		0.976	1.0	1.025
	TOTAL INPUT		0.991	1.0	1.009
	SHC		0.963	1.0	1.044

Cooling Capacity (Air Flow)
(Use for low ambient cooling parts)
PE-8MYC(-K), PEH-8MYA(-K)

INDOOR DB℃	INDOOR WB℃	OUTDOOR DB℃ -5.0 Q kW	SHC kW	SHF	T/I kW	0.0 Q kW	SHC kW	SHF	T/I kW	5.0 Q kW	SHC kW	SHF	T/I kW	10.0 Q kW	SHC kW	SHF	T/I kW	15.0 Q kW	SHC kW	SHF	T/I kW
20	15	22.0	15.2	0.70	5.2	22.0	15.1	0.70	5.2	21.9	14.9	0.69	5.2	21.8	15.0	0.70	5.3	21.6	14.9	0.70	5.5
	16	23.0	14.1	0.62	5.3	23.0	14.0	0.62	5.3	22.8	13.8	0.62	5.3	22.7	13.9	0.62	5.4	22.5	13.9	0.63	5.6
	17	23.8	12.7	0.54	5.4	23.9	12.7	0.54	5.4	23.7	12.6	0.54	5.4	23.6	12.7	0.55	5.5	23.3	12.6	0.55	5.7
22	15	22.0	17.6	0.81	5.2	22.0	17.6	0.81	5.2	21.9	17.5	0.81	5.2	21.8	17.6	0.82	5.3	21.6	17.5	0.82	5.5
	16	23.0	16.6	0.73	5.3	23.0	16.6	0.73	5.3	22.8	16.6	0.74	5.3	22.7	16.4	0.73	5.4	22.5	16.2	0.73	5.6
	17	23.8	15.3	0.65	5.4	23.9	15.5	0.66	5.4	23.7	15.4	0.66	5.4	23.6	15.1	0.65	5.5	23.3	14.7	0.64	5.7
	18	24.7	14.2	0.59	5.5	24.7	14.3	0.59	5.4	24.6	14.3	0.59	5.5	24.4	14.1	0.59	5.6	24.0	13.7	0.58	5.8
	19	25.6	13.1	0.52	5.6	25.5	13.1	0.52	5.6	25.4	13.0	0.52	5.6	25.1	12.9	0.52	5.8	24.8	12.7	0.52	6.1
24	16	23.0	19.6	0.86	5.3	23.0	19.5	0.86	5.3	22.8	19.2	0.85	5.3	22.7	19.2	0.86	5.4	22.5	19.2	0.86	5.6
	17	23.8	18.1	0.77	5.4	23.9	18.2	0.77	5.4	23.7	18.0	0.77	5.4	23.6	18.1	0.78	5.5	23.3	18.0	0.78	5.7
	18	24.7	16.6	0.68	5.5	24.7	16.7	0.69	5.4	24.6	16.8	0.69	5.5	24.4	16.8	0.70	5.6	24.0	16.6	0.70	5.8
	19	25.6	15.4	0.61	5.6	25.5	15.4	0.61	5.6	25.4	15.3	0.61	5.6	25.1	15.3	0.62	5.8	24.8	15.3	0.63	6.1
	20	26.5	14.1	0.54	5.7	26.4	13.9	0.54	5.7	26.3	13.7	0.53	5.8	26.1	13.9	0.54	5.9	25.8	14.0	0.55	6.1
	21	27.6	12.8	0.47	5.8	27.4	12.4	0.46	5.8	27.2	12.0	0.45	5.9	27.0	12.3	0.46	6.0	26.7	12.5	0.48	6.2
26	18	24.7	19.4	0.79	5.5	24.7	19.0	0.78	5.4	24.6	18.6	0.76	5.5	24.4	18.9	0.78	5.6	24.0	19.1	0.80	5.8
	19	25.6	18.2	0.72	5.6	25.5	17.9	0.71	5.6	25.4	17.7	0.70	5.6	25.1	17.7	0.71	5.8	24.8	17.8	0.72	6.1
	20	26.5	16.9	0.64	5.7	26.4	16.8	0.64	5.7	26.3	16.7	0.64	5.8	26.1	16.6	0.64	5.9	25.8	16.4	0.64	6.1
	21	27.6	15.8	0.58	5.8	27.4	15.6	0.57	5.8	27.2	15.4	0.57	5.9	27.0	15.3	0.57	6.0	26.7	15.1	0.57	6.2
	22	28.5	14.4	0.51	5.9	28.4	14.2	0.51	5.9	28.3	14.1	0.50	6.0	28.0	13.9	0.50	6.1	27.6	13.7	0.50	6.3
	23	29.3	12.9	0.45	6.1	29.3	12.7	0.44	6.0	29.2	12.5	0.43	6.1	28.9	12.3	0.43	6.2	28.5	12.2	0.43	6.4
28	19	25.6	20.5	0.81	5.6	25.5	20.5	0.81	5.6	25.4	20.4	0.81	5.6	25.1	20.3	0.82	5.8	24.8	20.1	0.82	6.1
	20	26.5	19.4	0.74	5.7	26.4	19.4	0.74	5.7	26.3	19.4	0.75	5.8	26.1	19.3	0.75	5.9	25.8	19.2	0.75	6.1
	21	27.6	18.3	0.67	5.8	27.4	18.3	0.68	5.8	27.2	18.3	0.68	5.9	27.0	18.2	0.68	6.0	26.7	18.0	0.68	6.2
	22	28.5	17.0	0.61	5.9	28.4	17.1	0.61	5.9	28.3	17.1	0.61	6.0	28.0	16.9	0.61	6.1	27.6	16.6	0.61	6.3
	23	29.3	15.6	0.54	6.1	29.3	15.6	0.54	6.0	29.2	15.6	0.54	6.1	28.9	15.4	0.54	6.2	28.5	15.2	0.54	6.4
	24	30.5	14.3	0.48	6.2	30.4	14.2	0.47	6.2	30.3	14.0	0.47	6.2	29.9	13.9	0.47	6.4	29.4	13.6	0.47	6.6
30	20	26.5	21.8	0.83	5.7	26.4	21.8	0.84	5.7	26.3	21.9	0.84	5.8	26.1	21.9	0.85	5.9	25.8	21.7	0.85	6.1
	21	27.6	20.8	0.76	5.8	27.4	20.7	0.76	5.8	27.2	20.6	0.77	5.9	27.0	20.6	0.77	6.0	26.7	20.5	0.78	6.2
	22	28.5	19.5	0.69	5.9	28.4	19.4	0.69	5.9	28.3	19.3	0.69	6.0	28.0	19.3	0.70	6.1	27.6	19.1	0.70	6.3
	23	29.3	18.1	0.63	6.1	29.3	18.1	0.63	6.0	29.2	18.1	0.63	6.1	28.9	17.9	0.63	6.2	28.5	17.8	0.63	6.4
	24	30.5	16.9	0.56	6.2	30.4	16.8	0.56	6.2	30.3	16.8	0.56	6.2	29.9	16.5	0.56	6.4	29.4	16.3	0.56	6.6

* Q: COOLING CAPACITY SHC: SENSIBLE HEAT CAPACITY T/I: TOTAL INPUT

Heating Capacity (Air Flow)
PEH-8MYA(-K)

INDOOR DB℃	OUTDOOR WB℃ -10.0 Q kW	T/I kW	-5.0 Q kW	T/I kW	0.0 Q kW	T/I kW
15	14.2	4.7	16.2	5.1	18.6	5.5
16	14.1	4.7	16.2	5.1	18.5	5.5
17	14.0	4.8	16.1	5.1	18.5	5.6
18	13.9	4.8	16.0	5.2	18.4	5.6
19	13.7	4.9	15.9	5.2	18.3	5.6
20	13.7	4.9	15.9	5.2	18.3	5.7
21	13.7	4.9	15.8	5.3	18.2	5.7
22	13.6	4.9	15.8	5.3	18.2	5.8
23	13.5	4.9	15.7	5.3	18.1	5.8
24	13.5	4.9	15.6	5.4	18.0	5.9
25	13.5	4.9	15.7	5.4	18.1	5.9
26	13.3	4.9	15.5	5.4	17.8	5.9
27	13.3	5.0	15.4	5.4	17.7	6.0

INDOOR DB℃	OUTDOOR WB℃ 5.0 Q kW	T/I kW	10 Q kW	T/I kW	15.0 Q kW	T/I kW
15	21.2	6.0	24.1	6.5	27.3	7.1
16	21.2	6.0	24.1	6.9	27.2	7.2
17	21.1	6.1	24.0	6.7	27.1	7.3
18	21.1	6.1	23.9	6.7	27.1	7.4
19	20.9	6..2	23.8	6.8	26.9	7.5
20	20.9	6.2	23.8	6.8	26.9	7.6
21	20.9	6..3	23.7	6.9	26.8	7.7
22	20.8	6.3	23.7	7.0	26.8	7.7
23	20.7	6.4	23.6	7.1	26.7	7.8
24	20.7	6.5	23.5	7.1	26.6	7.9
25	20.7	6.5	23.5	7.2	26.6	8.0
26	20.5	6.6	23.3	7.3	26.4	8.0
27	20.3	6..6	23.2	7.3	26.3	8.1

* Q : HEATING CAPACITY T/I : TOTAL INPUT

Factor for Various Air Flow

PE-8MYC(-K) PEH-8MYA(-K)	AIR VOLUME	CMM	60	70	80
		L/S	1,000	1,167	1,330
COOLING	CAPACITY		0.976	1.0	1.025
	TOTAL INPUT		0.991	1.0	1.009
	SHC		0.963	1.0	1.044

Factor for Various Air Flow

PEH-8MYA(-K)	AIR VOLUME	CMM	60	70	80
		L/S	1,000	1,167	1,330
HEATING	CAPACITY		0.989	1.0	1.011
	TOTAL INPUT		1.020	1.0	1.143

Cooling Capacity (Air Flow)
PE-10MYC(-K), PEH-10MYA(-K)

		OUTDOOR DB℃																							
INDOOR	INDOOR	20.0				25.0				30.0				35.0				40.0				46.0			
DB℃	WB℃	Q kW	SHC kW	SHF	T/I kW	Q kW	SHC kW	SHF	T/I kW	Q kW	SHC kW	SHF	T/I kW	Q kW	SHC kW	SHF	T/I kW	Q kW	SHC kW	SHF	T/I kW	Q kW	SHC kW	SHF	T/I kW
20	15	27.8	19.6	0.70	8.1	27.0	19.2	0.70	8.5	26.1	18.7	0.71	9.1	25.1	18.1	0.71	9.7	23.9	17.6	0.73	10.5	22.5	17.0	0.74	11.3
	16	28.9	18.2	0.62	8.2	28.1	17.9	0.63	8.6	27.1	17.3	0.63	9.2	26.0	16.7	0.63	9.8	24.7	16.1	0.64	10.6	23.3	15.4	0.65	11.4
	17	30.0	16.7	0.55	8.3	29.1	16.3	0.55	8.7	28.1	15.8	0.55	9.2	26.9	15.1	0.55	9.9	25.6	14.5	0.56	10.7	24.1	13.8	0.56	11.5
22	15	27.8	22.5	0.80	8.1	27.0	22.2	0.81	8.5	26.1	21.8	0.83	9.1	25.1	21.4	0.84	9.7	23.9	20.9	0.86	10.5	22.5	20.1	0.88	11.3
	16	28.9	21.3	0.73	8.2	28.1	21.0	0.74	8.6	27.1	20.5	0.75	9.2	26.0	19.9	0.76	9.8	24.7	19.4	0.77	10.6	23.3	18.7	0.79	11.4
	17	30.0	19.8	0.65	8.3	29.1	19.5	0.66	8.7	28.1	19.0	0.67	9.2	26.9	18.3	0.67	9.9	25.6	17.8	0.69	10.7	24.1	17.2	0.70	11.5
	18	31.1	18.3	0.58	8.3	30.2	18.0	0.59	8.8	29.1	17.5	0.59	9.3	27.9	16.9	0.60	10.0	26.5	16.3	0.61	10.8	24.9	15.6	0.62	11.6
	19	32.1	16.5	0.51	8.4	31.2	16.2	0.51	8.9	30.1	15.8	0.52	9.4	28.8	15.3	0.52	10.1	27.3	14.6	0.53	10.9	25.7	13.9	0.53	11.7
24	16	28.9	24.6	0.84	8.2	28.1	24.2	0.85	8.6	27.1	23.7	0.87	9.2	26.0	23.2	0.88	9.8	24.7	22.7	0.91	10.6	23.3	22.0	0.93	11.4
	17	30.0	23.0	0.76	8.3	29.1	22.6	0.77	8.7	28.1	22.1	0.78	9.2	26.9	21.6	0.79	9.9	25.6	21.1	0.81	10.7	24.1	20.4	0.84	11.5
	18	31.1	21.3	0.68	8.3	30.2	20.8	0.68	8.8	29.1	20.4	0.69	9.3	27.9	19.8	0.70	10.0	26.5	19.4	0.72	10.8	24.9	18.7	0.74	11.6
	19	32.1	19.6	0.60	8.4	31.2	19.2	0.61	8.9	30.1	18.7	0.61	9.4	28.8	18.2	0.62	10.1	27.3	17.6	0.64	10.9	25.7	17.0	0.65	11.7
	20	34.6	18.6	0.53	8.5	33.6	18.1	0.53	9.0	32.4	17.6	0.54	9.5	31.0	17.0	0.54	10.2	29.4	16.5	0.55	11.0	27.6	15.8	0.56	11.8
	21	34.6	16.1	0.46	8.6	33.6	15.6	0.46	9.1	32.4	15.1	0.46	9.6	31.0	14.6	0.46	10.3	29.4	14.0	0.47	11.1	27.6	13.3	0.47	12.0
26	18	31.1	24.2	0.77	8.3	30.2	23.9	0.78	8.8	29.1	23.4	0.80	9.3	27.9	22.9	0.81	10.0	26.5	22.4	0.84	10.8	24.9	21.7	0.86	11.6
	19	32.1	22.6	0.70	8.4	31.2	22.3	0.71	8.9	30.1	21.8	0.72	9.4	28.8	21.2	0.73	10.1	27.3	20.7	0.75	10.9	25.7	20.1	0.77	11.7
	20	34.6	21.8	0.62	8.5	33.6	21.5	0.63	9.0	32.4	20.9	0.64	9.5	31.0	20.1	0.64	10.2	29.4	19.7	0.66	11.0	27.6	19.1	0.68	11.8
	21	34.6	19.6	0.56	8.6	33.6	19.3	0.57	9.1	32.4	18.8	0.57	9.6	31.0	18.1	0.58	10.3	29.4	17.6	0.59	11.1	27.6	17.0	0.61	12.0
	22	35.8	18.0	0.50	8.7	34.7	17.7	0.50	9.2	33.5	17.2	0.51	9.8	32.0	16.6	0.51	10.4	30.4	16.1	0.52	11.2	28.6	15.5	0.53	12.1
	23	36.9	16.3	0.43	8.8	35.9	15.9	0.44	9.3	34.6	15.5	0.44	9.9	33.1	15.0	0.45	10.6	31.4	14.4	0.45	11.4	29.5	13.7	0.46	12.3
28	19	32.1	26.0	0.80	8.4	31.2	25.6	0.81	8.9	30.1	25.3	0.83	9.4	28.8	24.8	0.85	10.1	27.3	24.2	0.88	10.9	25.7	23.4	0.90	11.7
	20	34.6	25.4	0.73	8.5	33.6	25.0	0.74	9.0	32.4	24.7	0.75	9.5	31.0	24.2	0.77	10.2	29.4	23.6	0.79	11.0	27.6	22.8	0.82	11.8
	21	34.6	22.8	0.65	8.6	33.6	22.5	0.66	9.1	32.4	22.2	0.68	9.6	31.0	21.7	0.69	10.3	29.4	21.2	0.71	11.1	27.6	20.4	0.73	12.0
	22	35.8	21.3	0.59	8.7	34.7	20.9	0.60	9.2	33.5	20.7	0.61	9.8	32.0	20.1	0.62	10.4	30.4	19.6	0.64	11.2	28.6	18.9	0.65	12.1
	23	36.9	19.7	0.53	8.8	35.9	19.3	0.53	9.3	34.6	19.0	0.54	9.9	33.1	18.5	0.55	10.6	31.4	17.9	0.56	11.4	29.5	17.1	0.57	12.3
	24	38.0	17.9	0.46	8.9	36.9	17.5	0.47	9.4	35.7	17.2	0.47	10.0	34.2	16.7	0.48	10.7	32.5	16.1	0.49	11.5	30.5	15.2	0.49	12.4
30	20	34.6	28.0	0.80	8.5	33.6	27.5	0.81	9.0	32.4	27.0	0.83	9.5	31.0	26.3	0.84	10.2	29.4	26.0	0.88	11.0	27.6	25.4	0.91	11.8
	21	34.6	25.8	0.74	8.6	33.6	25.3	0.75	9.1	32.4	24.9	0.76	9.6	31.0	24.3	0.78	10.3	29.4	23.9	0.80	11.1	27.6	23.2	0.83	12.0
	22	35.8	24.5	0.68	8.7	34.7	23.9	0.68	9.2	33.5	23.6	0.70	9.8	32.0	23.0	0.71	10.4	30.4	22.5	0.73	11.2	28.6	21.8	0.75	12.1
	23	36.9	23.0	0.62	8.8	35.9	22.6	0.62	9.3	34.6	22.2	0.63	9.9	33.1	21.6	0.65	10.6	31.4	21.0	0.66	11.4	29.5	20.2	0.68	12.3
	24	38.0	21.4	0.56	8.9	36.9	21.0	0.56	9.4	35.7	20.6	0.57	10.0	34.2	20.1	0.58	10.7	32.5	19.5	0.59	11.5	30.5	18.6	0.60	12.4

* Q: COOLING CAPACITY SHC: SENSIBLE HEAT CAPACITY T/I: TOTAL INPUT

Factor for Various Air Flow

PE-10MYC(-K) PEH-10MYA(-K)	AIR VOLUME	CMM	80	90	100
		L/S	1,330	1,500	1,660
COOLING	CAPACITY		0.977	1.0	1.035
	TOTAL INPUT		0.991	1.0	1.005
	SHC		0.968	1.0	1.037

Cooling Capacity (Air Flow)
(Use for low ambient cooling parts)
PE-10MYC(-K), PEH-10MYA(-K)

		OUTDOOR DB ℃																			
INDOOR	INDOOR	-5.0				0.0				5.0				10.0				15.0			
DB℃	WB℃	Q kW	SHC kW	SHF	T/I kW	Q kW	SHC kW	SHF	T/I kW	Q kW	SHC kW	SHF	T/I kW	Q kW	SHC kW	SHF	T/I kW	Q kW	SHC kW	SHF	T/I kW
20	15	29.7	20.5	0.68	7.4	29.6	20.4	0.68	7.4	29.4	20.3	0.68	7.4	29.0	20.2	0.69	7.5	28.5	20.0	0.69	7.8
	16	30.8	18.9	0.61	7.5	30.7	18.9	0.61	7.5	30.5	18.8	0.61	7.5	30.1	18.7	0.61	7.6	29.6	18.5	0.62	7.9
	17	31.9	17.2	0.53	7.6	31.8	17.2	0.53	7.6	31.6	17.0	0.53	7.6	31.2	17.0	0.54	7.7	30.7	16.9	0.54	7.9
22	15	29.7	23.5	0.78	7.4	29.6	23.4	0.78	7.4	29.4	23.2	0.78	7.4	29.0	23.1	0.79	7.5	28.5	22.8	0.79	7.8
	16	30.8	22.0	0.71	7.5	30.7	22.0	0.71	7.5	30.5	22.0	0.71	7.5	30.1	21.7	0.71	7.6	29.6	21.5	0.72	7.9
	17	31.9	20.4	0.63	7.6	31.8	20.5	0.64	7.6	31.6	20.5	0.64	7.6	31.2	20.3	0.64	7.7	30.7	19.9	0.64	7.9
	18	32.9	18.9	0.57	7.7	32.9	19.0	0.57	7.7	32.7	18.9	0.57	7.7	32.3	18.7	0.57	7.8	31.8	18.4	0.57	8.0
	19	34.3	17.5	0.50	7.7	34.2	17.4	0.50	7.7	33.9	17.3	0.50	7.8	33.5	17.1	0.50	7.9	32.9	16.8	0.50	8.1
24	16	30.8	25.2	0.81	7.5	30.7	25.3	0.82	7.5	30.5	25.3	0.82	7.5	30.1	25.1	0.83	7.6	29.6	24.9	0.83	7.9
	17	31.9	23.7	0.74	7.6	31.8	23.8	0.74	7.6	31.6	23.7	0.74	7.6	31.2	23.5	0.75	7.7	30.7	23.3	0.75	7.9
	18	32.9	22.0	0.66	7.7	32.9	22.0	0.66	7.7	32.7	21.9	0.66	7.7	32.3	21.8	0.67	7.8	31.8	21.6	0.67	8.0
	19	34.3	20.5	0.59	7.7	34.2	20.5	0.59	7.7	33.9	20.3	0.59	7.8	33.5	20.2	0.60	7.9	32.9	20.0	0.60	8.1
	20	36.7	19.4	0.52	7.8	36.6	19.3	0.52	7.8	36.4	19.2	0.52	7.8	36.0	19.2	0.53	8.0	35.4	19.1	0.53	8.2
	21	36.7	16.8	0.45	7.9	36.6	16.8	0.45	7.9	36.4	16.7	0.45	7.9	36.0	16.7	0.46	8.0	35.4	16.6	0.46	8.3
26	18	32.9	25.0	0.75	7.7	32.9	25.0	0.75	7.7	32.7	24.8	0.75	7.7	32.3	24.7	0.76	7.8	31.8	24.5	0.76	8.0
	19	34.3	23.6	0.68	7.7	34.2	23.6	0.68	7.7	33.9	23.4	0.68	7.8	33.5	23.2	0.68	7.9	32.9	22.8	0.69	8.1
	20	36.7	22.7	0.61	7.8	36.6	22.6	0.61	7.8	36.4	22.5	0.61	7.8	36.0	22.3	0.61	8.0	35.4	21.9	0.61	8.2
	21	36.7	20.5	0.55	7.9	36.6	20.4	0.55	7.9	36.4	20.3	0.55	7.9	36.0	20.1	0.55	8.0	35.4	19.8	0.55	8.3
	22	37.9	18.9	0.49	8.0	37.9	18.9	0.49	8.0	37.6	18.7	0.49	8.0	37.2	18.5	0.49	8.1	36.6	18.2	0.49	8.4
	23	38.9	17.0	0.43	8.0	38.9	17.0	0.43	8.1	38.8	17.0	0.43	8.1	38.4	16.8	0.43	8.2	37.7	16.5	0.43	8.5
28	19	34.3	27.1	0.78	7.7	34.2	27.0	0.78	7.7	33.9	26.7	0.78	7.8	33.5	26.6	0.79	7.9	32.9	26.3	0.79	8.1
	20	36.7	26.2	0.71	7.8	36.6	26.2	0.71	7.8	36.4	26.1	0.71	7.8	36.0	26.0	0.71	8.0	35.4	25.6	0.72	8.2
	21	36.7	23.4	0.63	7.9	36.6	23.5	0.64	7.9	36.4	23.6	0.64	7.9	36.0	23.3	0.64	8.0	35.4	23.0	0.64	8.3
	22	37.9	22.1	0.58	8.0	37.9	22.2	0.58	8.0	37.6	22.1	0.58	8.0	37.2	21.9	0.58	8.1	36.6	21.5	0.58	8.4
	23	38.9	20.5	0.52	8.0	38.9	20.5	0.52	8.1	38.8	20.5	0.52	8.1	38.4	20.3	0.52	8.2	37.7	19.9	0.52	8.5
	24	39.8	18.8	0.47	8.1	39.9	18.8	0.46	8.1	39.7	18.6	0.46	8.2	39.4	18.4	0.46	8.3	38.8	18.1	0.46	8.5
30	20	36.7	28.9	0.78	7.8	36.6	28.8	0.78	7.8	36.4	28.7	0.78	7.8	36.0	28.6	0.79	8.0	35.4	28.3	0.79	8.2
	21	36.7	26.7	0.72	7.9	36.6	26.7	0.72	7.9	36.4	26.5	0.72	7.9	36.0	26.4	0.73	8.0	35.4	26.1	0.73	8.3
	22	37.9	25.3	0.66	8.0	37.9	25.3	0.66	8.0	37.6	25.1	0.66	8.0	37.2	25.0	0.67	8.1	36.6	24.8	0.67	8.4
	23	38.9	23.6	0.60	8.0	38.9	23.6	0.60	8.1	38.8	23.6	0.60	8.1	38.4	23.5	0.61	8.2	37.7	23.3	0.61	8.5
	24	39.8	21.8	0.54	8.1	39.9	21.8	0.54	8.1	39.7	21.7	0.54	8.2	39.4	21.8	0.55	8.3	38.8	21.6	0.55	8.5

* Q: COOLING CAPACITY SHC: SENSIBLE HEAT CAPACITY T/I: TOTAL INPUT

Heating Capacity (Air Flow)
PEH-10MYA(-K)

	OUTDOOR WB ℃					
INDOOR	-10.0		-5.0		0.0	
DB℃	Q kW	T/I kW	Q kW	T/I kW	Q kW	T/I kW
15	17.6	5.7	20.6	6.2	24.0	6.8
16	17.5	5.7	205	6.2	23.7	6.8
17	17.4	5.7	20.5	6.2	23.8	6.9
18	17.4	5.8	20.4	6.3	23.7	6.9
19	17.3	5.8	20.3	6.3	23.6	7.0
20	17.2	5.8	20.2	6.4	23.5	7.0
21	17.1	5.8	20.1	6.4	23.5	7.1
22	17.0	5.9	20.0	6.4	23.4	7.2
23	16.9	5.9	19.9	6.5	23.3	7.2
24	16.8	5.9	19.8	6.5	23.2	7.3
25	16.7	5.9	19.7	6.6	23.1	7.4
26	16.6	6.0	19.6	6.6	22.9	7.4
27	16.5	6.0	19.5	6.7	22.8	7.5

	OUTDOOR WB ℃					
INDOOR	5.0		10		15.0	
DB ℃	Q kW	T/I kW	Q kW	T/I kW	Q kW	T/I kW
15	27.8	7.6	32.0	8.5	36.5	9.5
16	27.7	7.5	31.9	8.4	36.4	9.4
17	27.6	7.7	31.8	8..6	36.3	9.6
18	27.5	7.7	31.7	8.7	36.2	9.8
19	27.3	7.8	31.5	8.8	36.1	9.9
20	27.3	7.9	31.4	8.9	36.0	10.0
21	27.2	8.0	31.3	9.0	35.8	10.1
22	27.1	8.0	31.2	9.0	35.6	10.2
23	27.0	8.1	31.0	9.1	35.4	10.2
24	26.9	8.2	30.9	9.2	35.3	10.3
25	26.8	8.3	30.8	9.3	35.1	10.4
26	26.6	8.3	30.6	9.4	34.8	10.6
27	26.4	8.4	30.3	9.5	34.6	10.7

* Q : HEATING CAPACITY T/I : TOTAL INPUT

Factor for Various Air Flow

PE-10MYC(-K) PEH-10MYA(-K)	AIR VOLUME	CMM	80	90	100
		L/S	1.330	1,500	1,660
COOLING	CAPACITY		0.977	1.0	1.035
	TOTAL INPUT		0.991	1.0	1.005
	SHC		0.968	1.0	1.037

Factor for Various Air Flow

PEH-10MYA(-K)	AIR VOLUME	CMM	80	90	100
		L/S	1,330	1,500	1,660
HEATING	CAPACITY		0.989	1.0	1.008
	TOTAL INPUT		1.025	1.0	0.984

SOUND DATA

INDOOR UNITS

Sound Levels

MODEL	PWL dB(A)	SPL dB(A)	OCTAVE BAND FREQ. Hz							
			63Hz	125Hz	250Hz	500Hz	1000Hz	2000Hz	4000Hz	8000Hz
PE(H)-7	62	55	62	60	54	53	50	42.5	37	31.5
PE(H)-8	64	56	63	61	55	54	51	43.5	38	32.5
PE(H)-10	67	59	62	62.5	58.5	59.5	53	48	43.5	36

OUTDOOR UNITS

Sound Levels

MODEL	PWL dB(A)	SPL dB(A)	OCTAVE BAND FREQ. Hz							
			63Hz	125Hz	250Hz	500Hz	1000Hz	2000Hz	4000Hz	8000Hz
PU(H)-7	76	65	62	63.5	62	62	60	57.5	54	54
PU(H)-8	76	65	62	63.5	62	62	60	57.5	54	54
PU(H)-10	76	65	64.5	65	64	62.5	60	57	54.5	53

POSITION MEASUREMENT

PE(H)

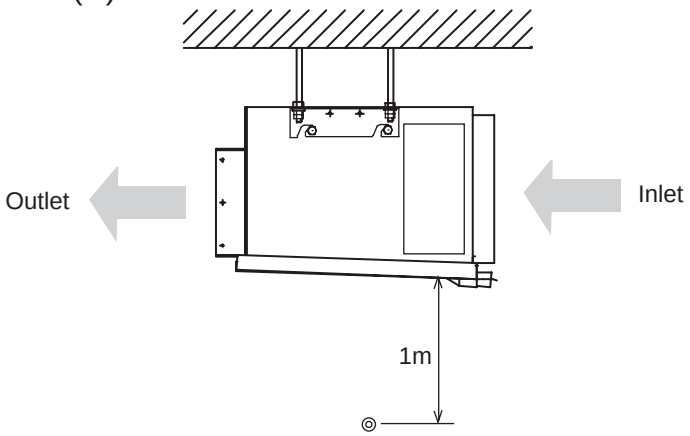

PU(H)

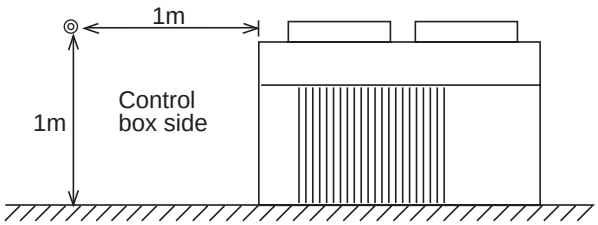

FAN PERFORMANCE CURVE

PE(H)-7

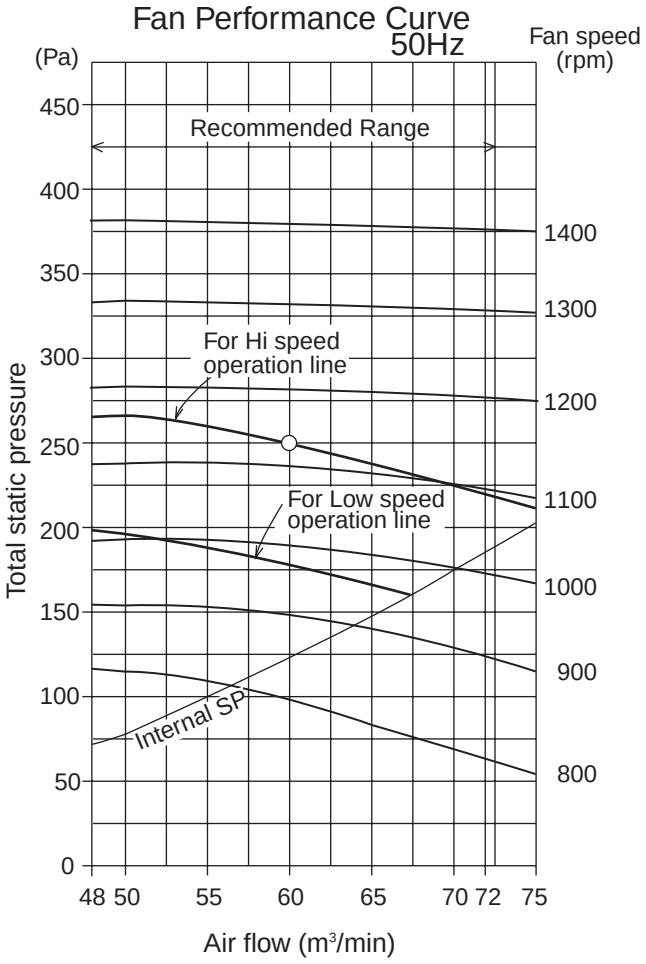

PE(H)-8

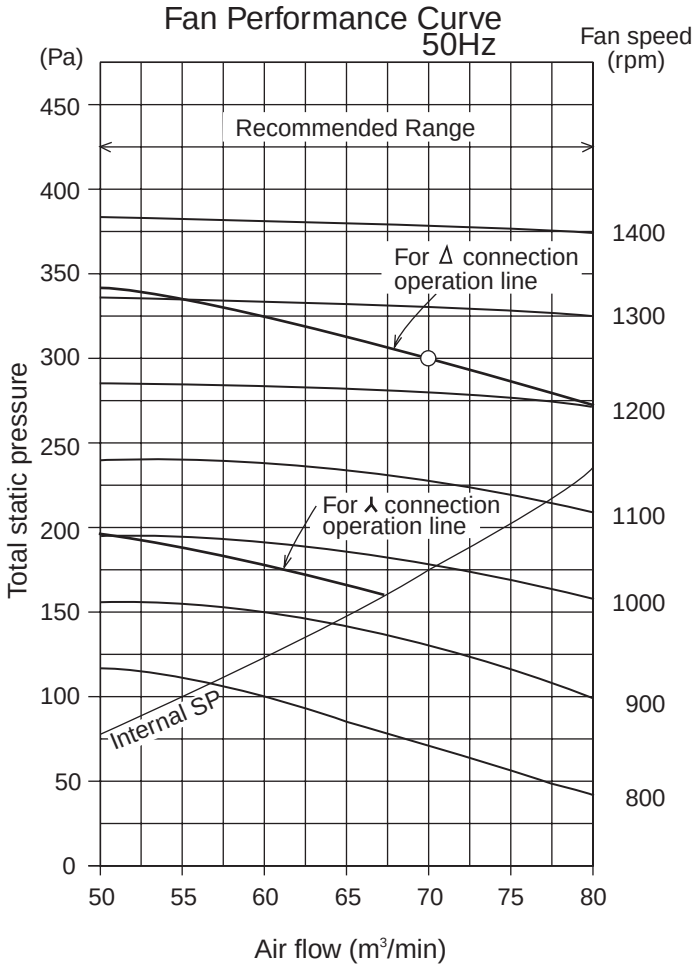

PE(H)-10

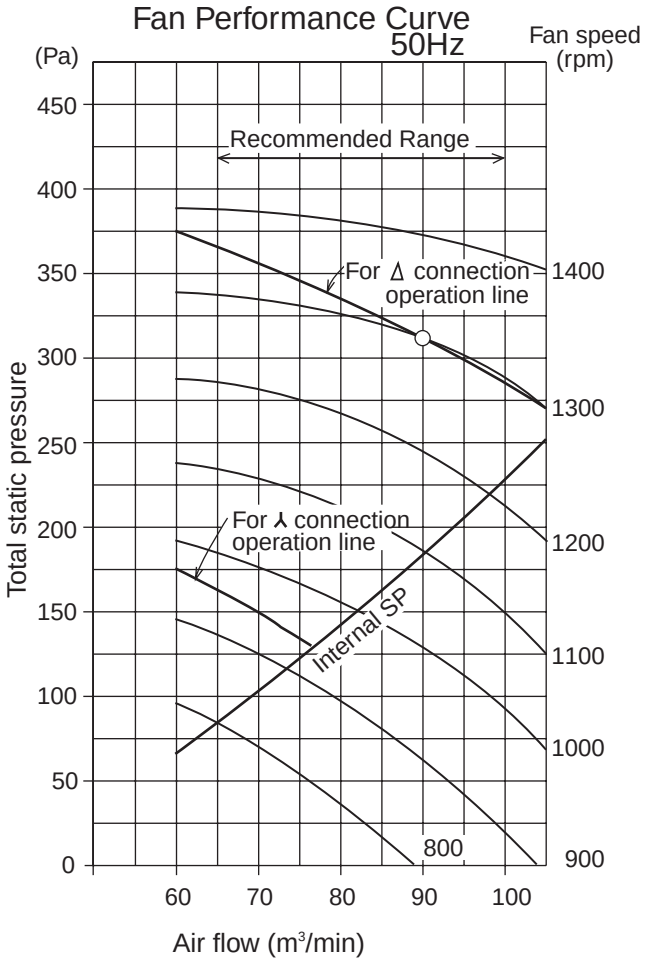

OUTLINE DIMENSIONS

PE(H)-7,8

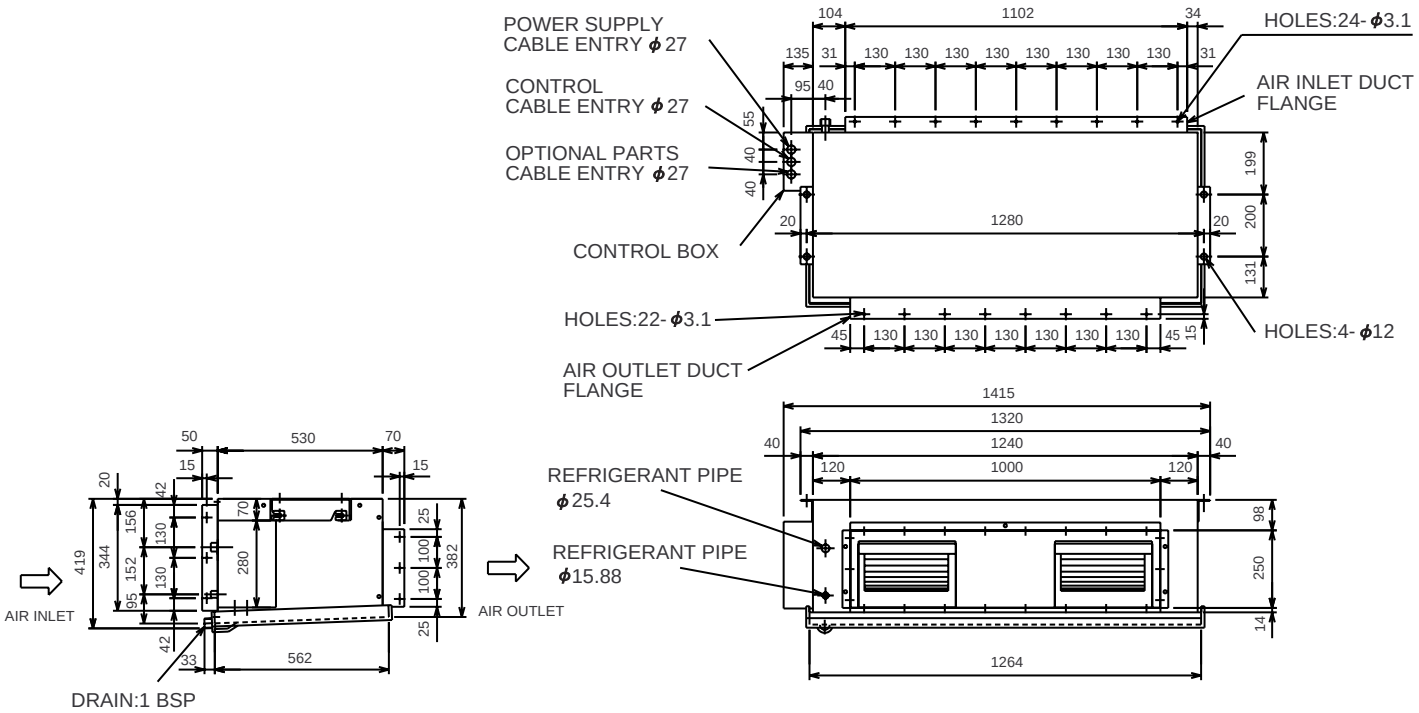

PE(H)-10

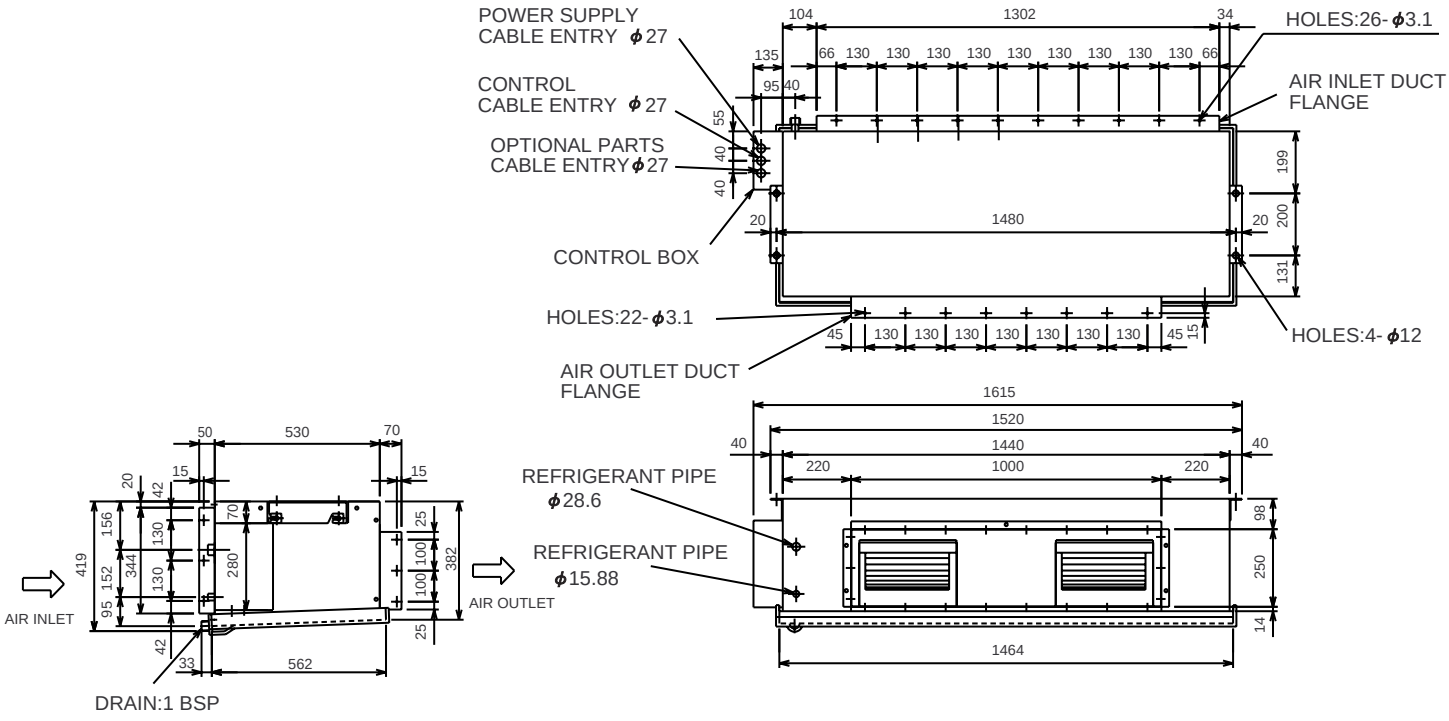

PU(H)-7,8,10

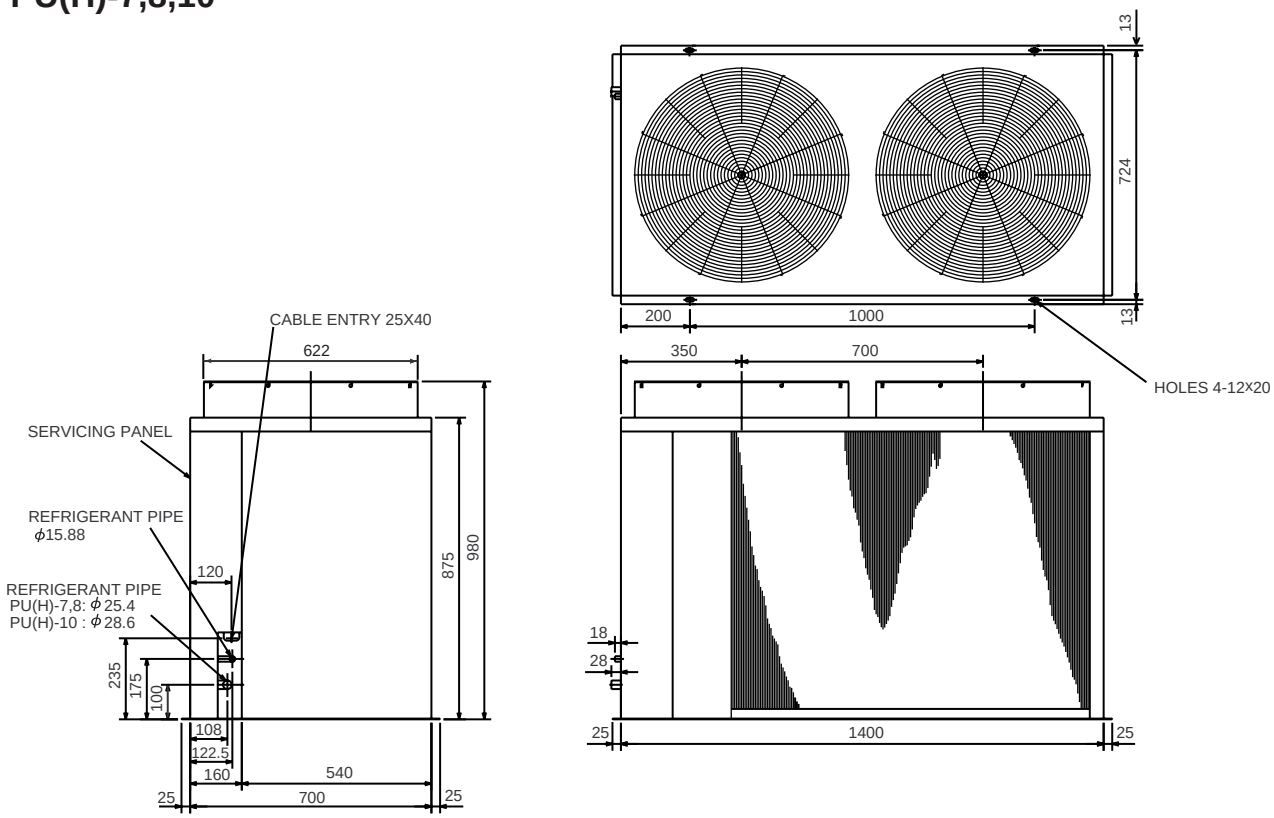

Note: In the case of installation are shown below, it is possible to use the unit by connecting the dust.
However, the pressure loss must be 30Pa (3mmAg) or less.
Dust work is local supply.

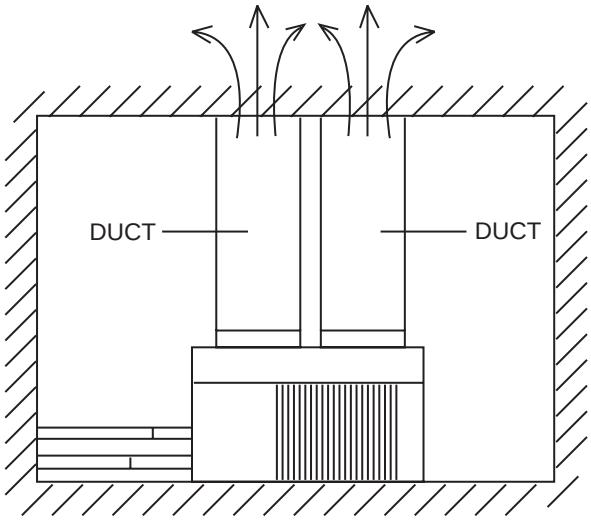

WIRING DIAGRAMS

PE-7MYC (STANDARD)

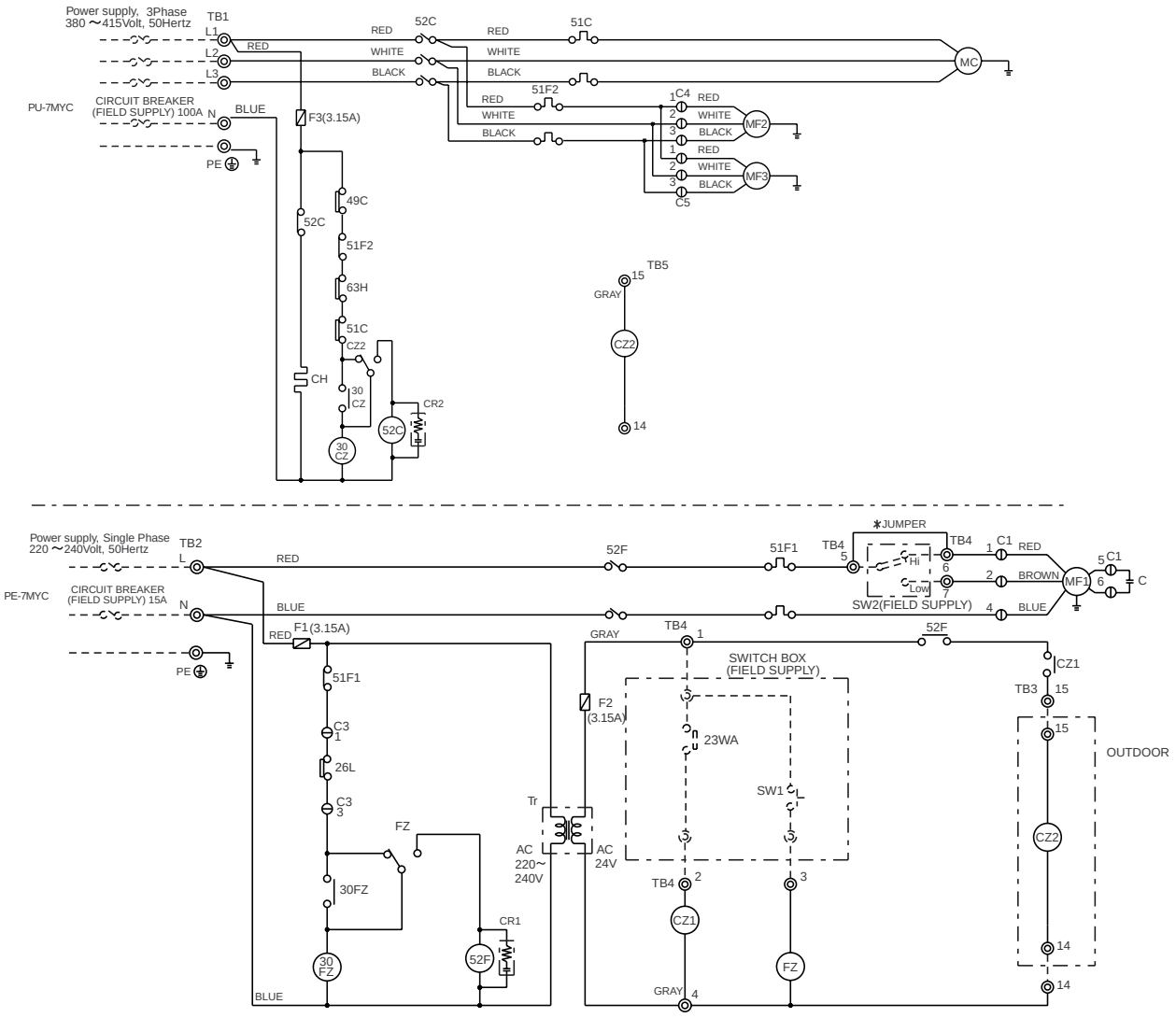

Symbol	Name
MC	Compressor motor
MF1	Fan motor (indoor)
MF2,3	Fan motor (outdoor)
52C	Contactor (compressor)
52F	Contactor (fan I/D)
TB1~5	Terminal block
CH	Crankcase heater
F1~3	Fuse (3.15A)
Tr	Transformer
49C	Internal thermostat (compressor)
51C	Over current relay (compressor)
51F1,2	Over current relay(fanI/D,O/D)
63H	High-pressure switch
26L	Thermostat (freeze protection)
FZ	Auxiliary relay (fan)
CZ1, 2	Auxiliary relay (compressor)
30CZ, FZ	Auxiliary relay (check)
〈SW1〉	Switch (on)
〈SW2〉	Switch (Fan Hi-Low)
〈23WA〉	Thermostat (room temp.)
C	Run capacitor
C1, C3~5	Connector
CR1, 2	Surge killer

Note:1.The dotted lines show field wiring.
2.The figure in the parentheses show field supply parts.
3.Color of earth wire is yellow and green twisting.
4.Not specified color of wire is brown.
5.Please remove the jumper wire (*Mark) in the above diagram if you use the Switch <SW2> at local.
If the Switch <SW2> is not used, the Fan motor (indoor) drives at high speed.
6.Specification subject to change without notice.

Caution,
1.To protect each Fan motor and Compressor from abnormal current, Over current relays <51C>, <51F1,2> are installed. Therefore, do not change factory set value of Over current relays.

Local controller connection.
(Ex.Type SHP-1)

Symbol	No.	Function	Local controller's terminal no.
TB4	1	Power (Active)	24V
	2	Cooling operation	Y1
	3	Fan operation	G
	4	Power (Neutral)	24V(C)

PE-8,10MYC (STANDARD)

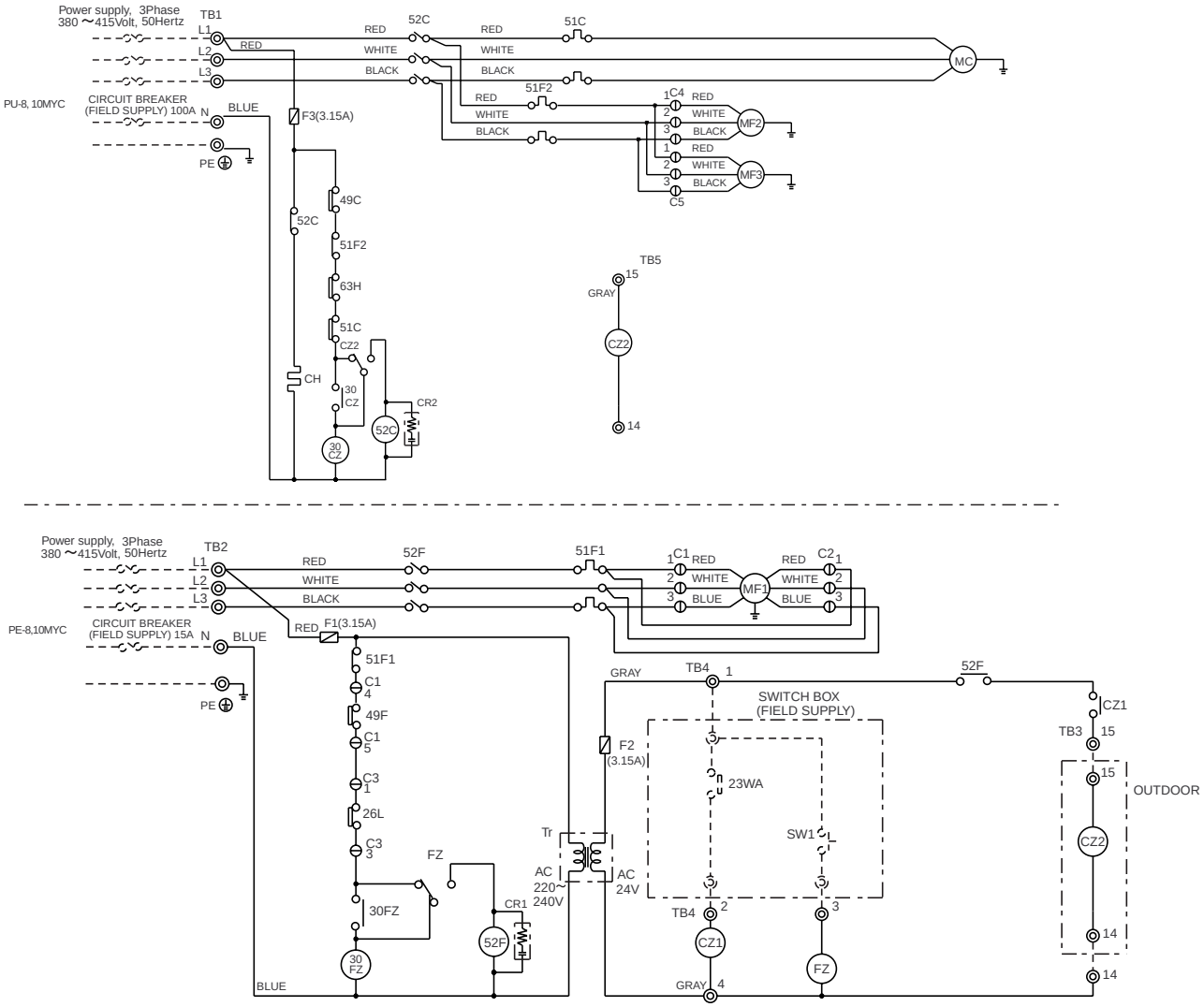

Symbol	Name
MC	Compressor motor
MF1	Fan motor (indoor)
MF2,3	Fan motor (outdoor)
52C	Contactor (compressor)
52F	Contactor (fan I/D)
TB1~5	Terminal block
CH	Crankcase heater
F1~3	Fuse (3.15A)
Tr	Transformer
49F	Internal thermostat (indoor fan)
49C	Internal thermostat (compressor)
51C	Over current relay (compressor)
51F1,2	Over current relay(fanI/D,O/D)
63H	High-pressure switch
26L	Thermostat (freeze protection)
FZ	Auxiliary relay (fan)
CZ1, 2	Auxiliary relay (compressor)
30CZ, FZ	Auxiliary relay (check)
〈SW1〉	Switch (on)
〈23WA〉	Thermostat (room temp.)
C1~5	Connector
CR1, 2	Surge killer

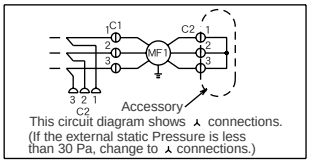

Note:1.The dotted lines show field wiring.
2.The figure in the parentheses show field supply parts.
3.Color of earth wire is yellow and green twisting.
4.Not specified color of wire is brown.
5.Specification subject to change without notice.

Caution,
1.To protect each Fan motor and Compressor from abnormal current, Over current relays <51C>, <51F1,2> are installed. Therefore, do not change factory set value of Over current relays.

Local controller connection.
(Ex.Type SHP-1)

Symbol	No.	Function	Local controller's terminal no.
TB4	1	Power (Active)	24V
	2	Cooling operation	Y1
	3	Fan operation	G
	4	Power (Neutral)	24V(C)

PE-7MYC-K (STANDARD)

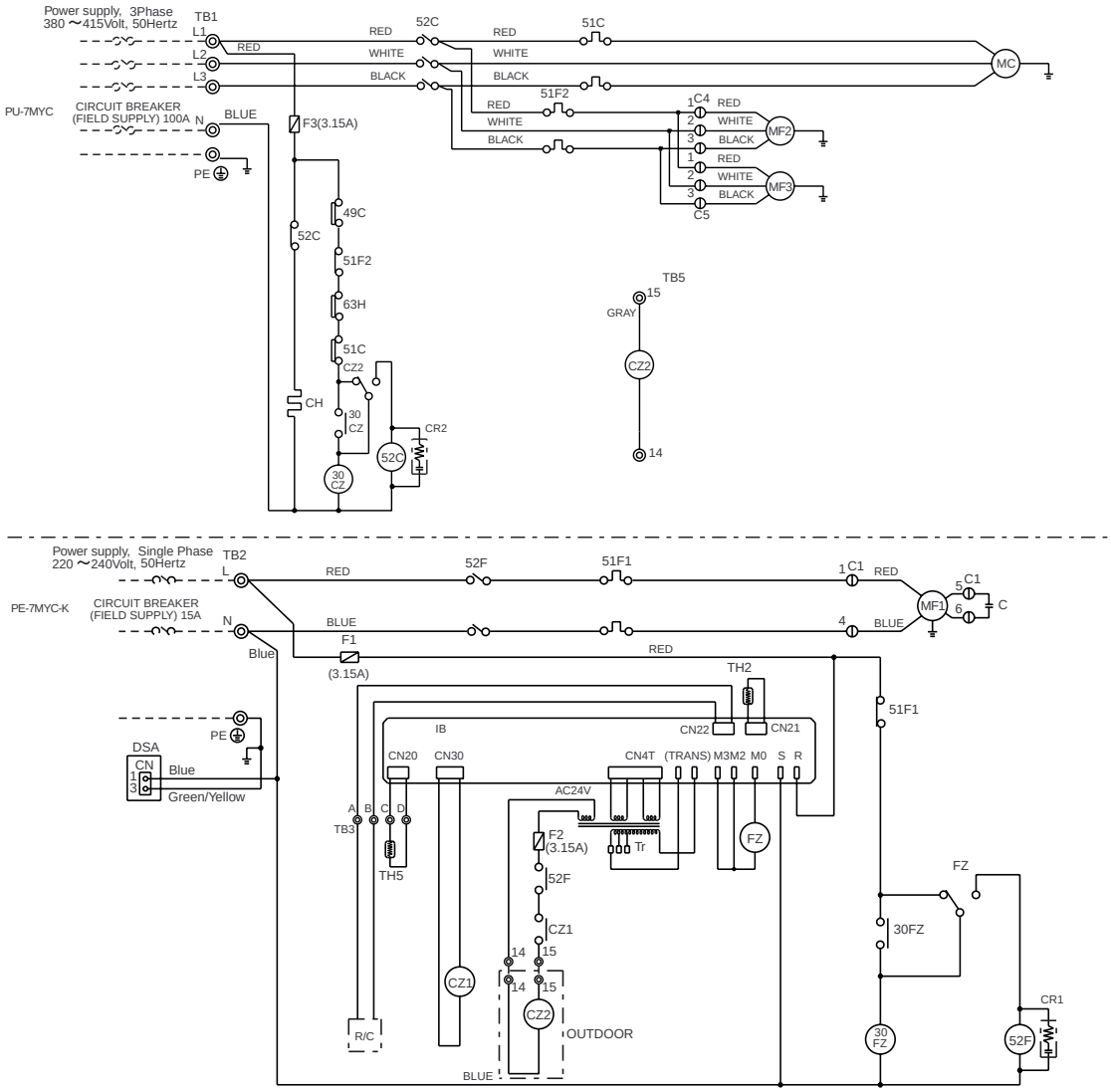

Symbol	Name
MC	Compressor motor
MF1	Fan motor (indoor)
MF2,3	Fan motor (outdoor)
52C	Contactor (compressor)
52F	Contactor (fan I/D)
TB1~3, 5	Terminal block
CH	Crankcase heater
F1~3	Fuse (3.15A)
Tr	Transformer
49C	Internal thermostat(compressor)
51C	Over current relay (compressor)
51F1,2	Over current relay(fanI/D,O/D)
63H	High-pressure switch
FZ	Auxiliary relay (fan)
CZ1, 2	Auxiliary relay (compressor)
30CZ, FZ	Auxiliary relay (check)
IB	Indoor board
TH2	Thermistor (pipe)
TH5	Thermistor (room temp.)
R/C	Remote controller
DSA	Surge absorber circuit board
C	Run capacitor
C1,4~5	Connector
CR1, 2	Surge killer

Note:1.The dotted lines show field wiring.
2.The figure in the parentheses show field supply parts.
3.Color of earth wire is yellow and green twisting.
4.Not specified color of wire is brown.
5.Specification subject to change without notice.

Caution,
1.To protect each Fan motor and Compressor from abnormal current, Over current relays <51C>, <51F1,2> are installed. Therefore, do not change factory set value of Over current relays.

PE-8,10MYC-K (STANDARD)

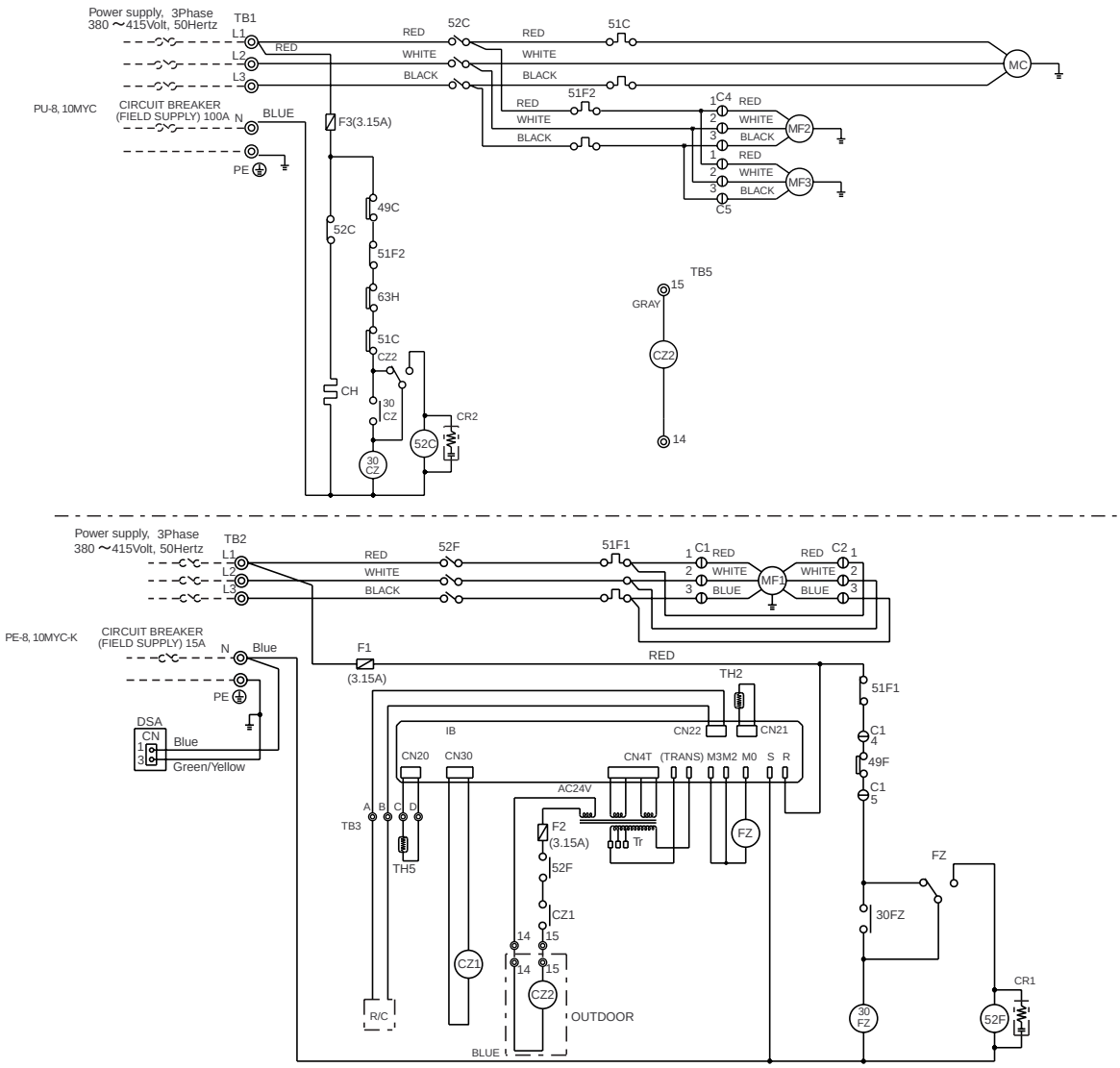

Symbol	Name
MC	Compressor motor
MF1	Fan motor (indoor)
MF2,3	Fan motor (outdoor)
52C	Contactor (compressor)
52F	Contactor (fan I/D)
TB1~3, 5	Terminal block
CH	Crankcase heater
F1~3	Fuse (3.15A)
Tr	Transformer
49F	Internal thermostat (indoor fan)
49C	Internal thermostat (compressor)
51C	Over current relay (compressor)
51F1,2	Over current relay(fanI/D,O/D)
63H	High-pressure switch
FZ	Auxiliary relay (fan)
CZ1, 2	Auxiliary relay (compressor)
30CZ, FZ	Auxiliary relay (check)
IB	Indoor board
TH2	Thermistor (pipe)
TH5	Thermistor (room temp.)
R/C	Remote controller
DSA	Surge absorber circuit board
C1,2,4,5	Connector
CR1, 2	Surge killer

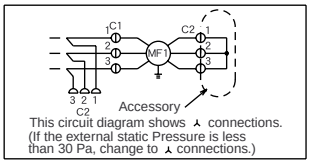

Note:1.The dotted lines show field wiring.
2.The figure in the parentheses show field supply parts.
3.Color of earth wire is yellow and green twisting.
4.Not specified color of wire is brown.
5.Specification subject to change without notice.

Caution,
1.To protect each Fan motor and Compressor from abnormal current, Over current relays <51C>, <51F1,2> are installed. Therefore, do not change factory set value of Over current relays.

PE-7MYC
(SPECIAL ORDER :ANTI SHORT CYCLE TIMER)

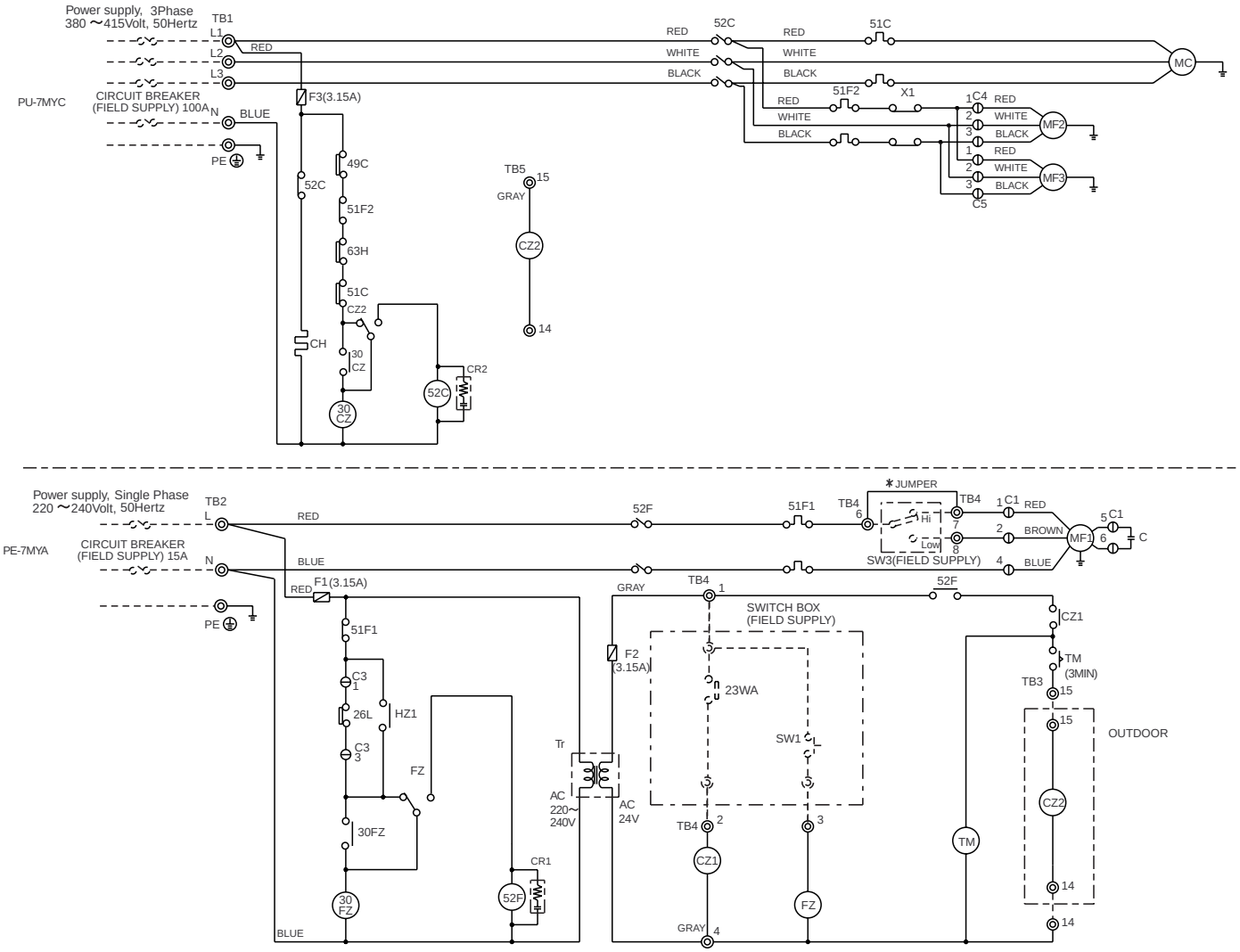

Symbol	Name
MC	Compressor motor
MF1	Fan motor (indoor)
MF2,3	Fan motor (outdoor)
52C	Contactor (compressor)
52F	Contactor (fan I/D)
TB1～5	Terminal block
CH	Crankcase heater
F1～3	Fuse (3.15A)
Tr	Transformer
49C	Internal thermostat (compressor)
51C	Over current relay (compressor)
51F1,2	Over current relay(fanI/D,O/D)
63H	High-pressure switch
26L	Thermostat (freeze protection)
FZ	Auxiliary relay (fan)
CZ1, 2	Auxiliary relay (compressor)
30CZ, FZ	Auxiliary relay (check)
〈SW1〉	Switch (on)
〈SW2〉	Switch (Fan Hi-Low)
〈23WA〉	Thermostat (room temp.)
C	Run capacitor
C1, C3～5	Connector
CR1, 2	Surge killer
TM	Timer (Anti short cycle)

Note:1.The dotted lines show field wiring.
2.The figure in the parentheses show field supply parts.
3.Color of earth wire is yellow and green twisting.
4.Not specified color of wire is brown.
5.Please remove the jumper wire (∗Mark) in the above diagram if you use the Switch <SW2> at local.
If the Switch <SW2> is not used, the Fan motor (indoor) drives at high speed.
6.Specification subject to change without notice.

Caution,
1.To protect each Fan motor and Compressor from abnormal current, Over current relays <51C>, <51F1,2> are installed. Therefore, do not change factory set value of Over current relays.

Local controller connection.
(Ex.Type SHP-1)

Symbol	No.	Function	Local controller's terminal no.
TB4	1	Power (Active)	24V
	2	Cooling operation	Y1
	3	Fan operation	G
	4	Power (Neutral)	24V(C)

PE-8,10MYC
(SPECIAL ORDER :ANTI SHORT CYCLE TIMER.)

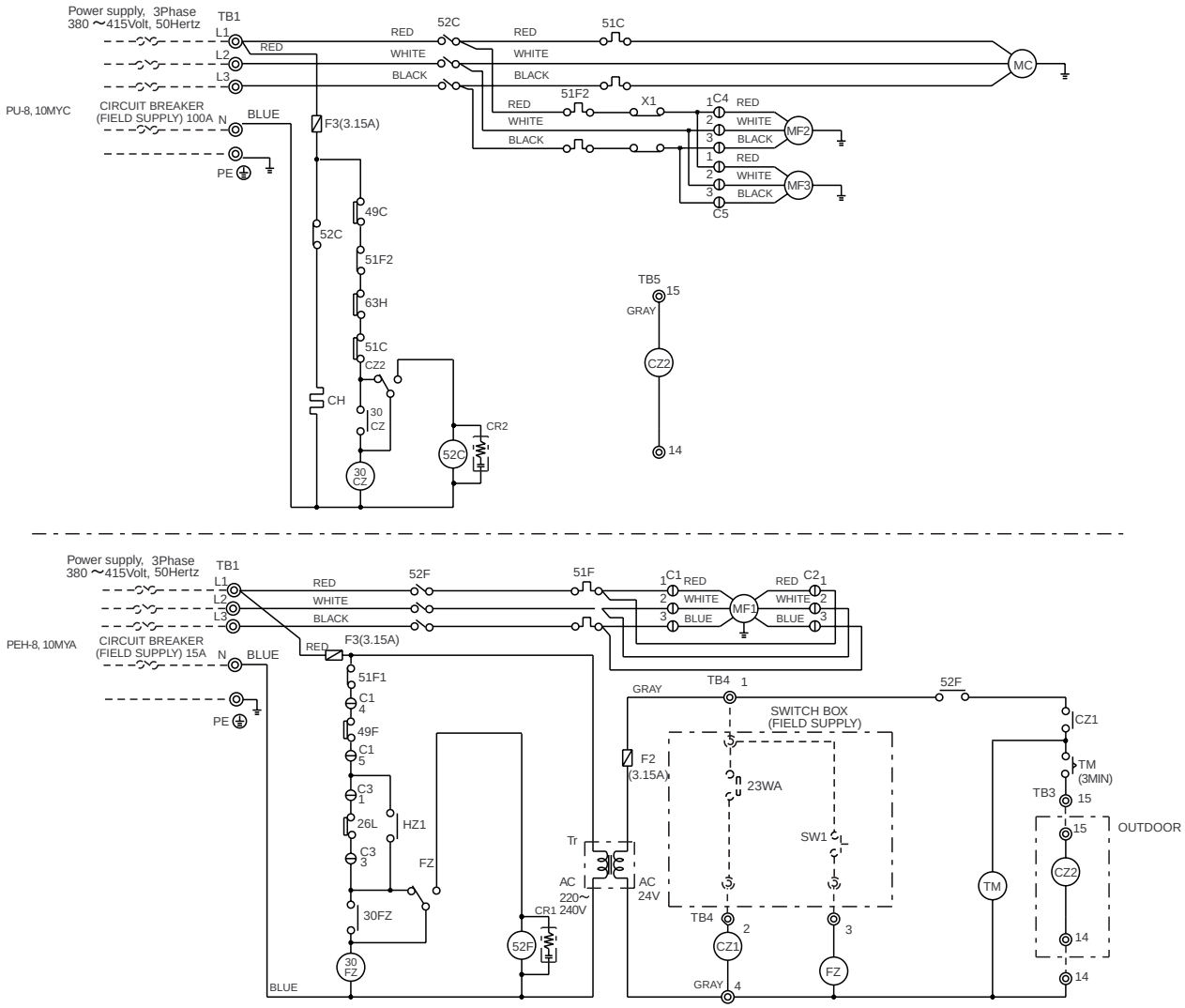

Symbol	Name
MC	Compressor motor
MF1	Fan motor (indoor)
MF2,3	Fan motor (outdoor)
52C	Contactor (compressor)
52F	Contactor (fan I/D)
TB1~5	Terminal block
CH	Crankcase heater
F1~3	Fuse (3.15A)
Tr	Transformer
49F	Internal thermostat(indoor fan)
49C	Internal thermostat(compressor)
51C	Over current relay (compressor)
51F1,2	Over current relay(fanI/D,O/D)
63H	High-pressure switch
26L	Thermostat (freeze protection)
FZ	Auxiliary relay (fan)
CZ1, 2	Auxiliary relay (compressor)
30CZ, FZ	Auxiliary relay (check)
〈SW1〉	Switch (on)
〈23WA〉	Thermostat (room temp.)
C1~5	Connector
CR1, 2	Surge killer
TM	Timer (Anti short cycle)

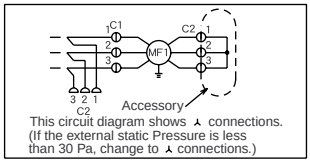

Note:1.The dotted lines show field wiring.
2.The figure in the parentheses show field supply parts.
3.Color of earth wire is yellow and green twisting.
4.Not specified color of wire is brown.
5.Specification subject to change without notice.

Caution,
1.To protect each Fan motor and Compressor from abnormal current, Over current relays <51C>, <51F1,2> are installed. Therefore, do not change factory set value of Over current relays.

Local controller connection.
(Ex.Type SHP-1)

Symbol	No.	Function	Local controller's terminal no.
TB4	1	Power (Active)	24V
	2	Cooling operation	Y1
	3	Fan operation	G
	4	Power (Neutral)	24V(C)

PE-7MYC
(SPECIAL ORDER :LOW AMBIENT COOLING)

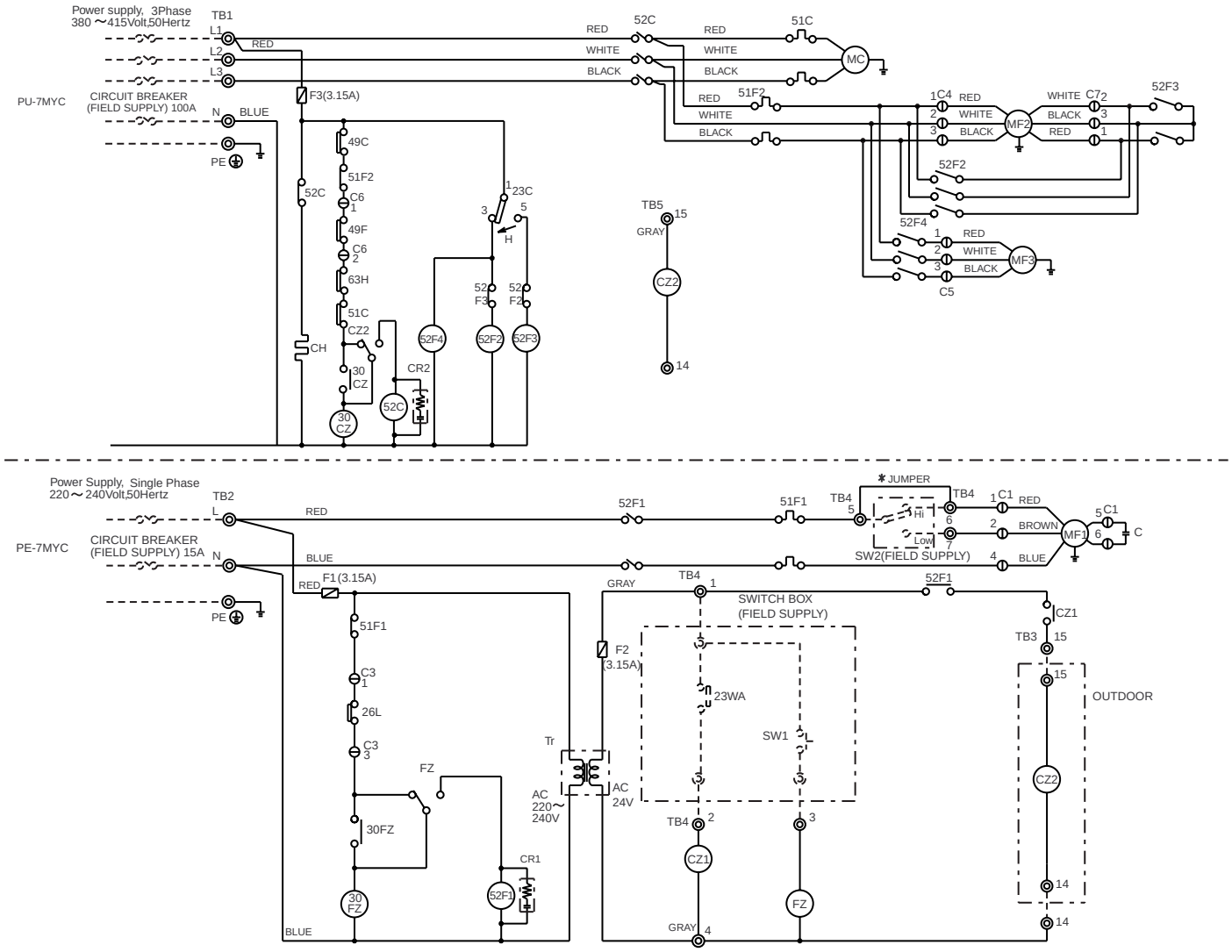

Symbol	Name
MC	Compressor motor
MF1	Fan motor (indoor)
MF2,3	Fan motor (outdoor)
52C	Contactor (compressor)
52F1	Contactor (fan I/D)
52F2~4	Contactor (fan O/D)
23C	Ambient temperature
TB1~5	Terminal block
CH	Crankcase heater
F1~3	Fuse (3.15A)
Tr	Transformer
49C	Internal thermostat(compressor)
49F	Internal thermostat(fan O/D)
51C	Over current relay (compressor)
51F1,2	Over current relay(fanI/D,O/D)
63H	High-pressure switch
26L	Thermostat (freeze protection)
FZ	Auxiliary relay (fan)
CZ1, 2	Auxiliary relay (compressor)
30CZ, FZ	Auxiliary relay (check)
〈SW1〉	Switch (on)
〈SW2〉	Switch (Fan Hi-Low)
〈23WA〉	Thermostat (room temp.)
C	Run capacitor
C1, 3~7	Connector
CR1, 2	Surge killer

Note:1.The dotted lines show field wiring.
2.The figure in the parentheses show field supply parts.
3.Color of earth wire is yellow and green twisting.
4.Not specified color of wire is brown.
5.Please remove the jumper wire (*Mark) in the above diagram if you use the Switch <SW2> at local.
If the Switch <SW2> is not used, the Fan motor (indoor) drives at high speed.
6.Specification subject to change without notice.

Caution,
1.To protect each Fan motor and Compressor from abnormal current, Over current relays <51C>, <51F1,2> are installed. Therefore, do not change factory set value of Over current relays.

Local controller connection.
(Ex.Type SHP-1)

Symbol	No.	Function	Local controller's terminal no.
TB4	1	Power (Active)	24V
	2	Cooling operation	Y1
	3	Fan operation	G
	4	Power (Neutral)	24V(C)

PE-8,10MYC
(SPECIAL ORDER :LOW AMBIENT COOLING)

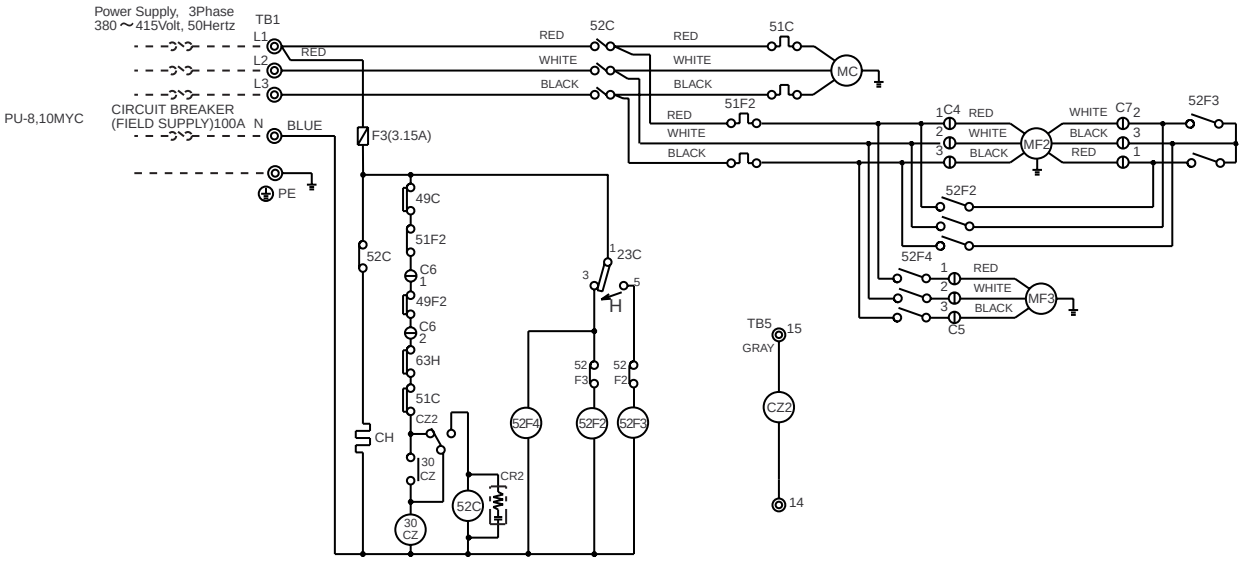

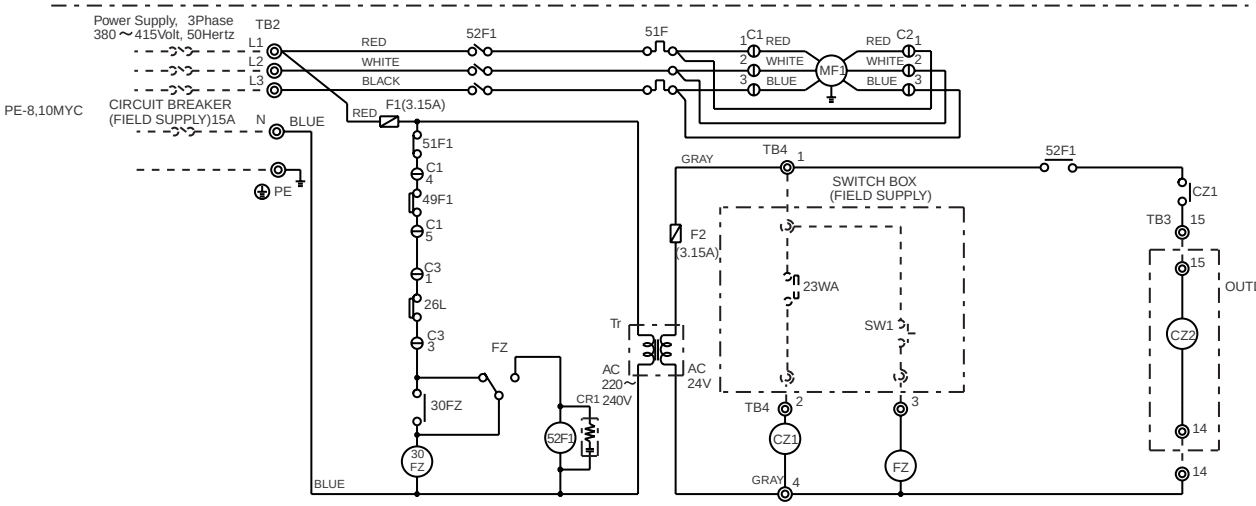

Symbol	Name
MC	Compressor motor
MF1	Fan motor (indoor)
MF2,3	Fan motor (outdoor)
52C	Contactor (compressor)
52F1	Contactor (fan I/D)
52F2～4	Contactor (fan O/D)
23C	Ambient temperature
TB1～5	Terminal block
CH	Crankcase heater
F1～3	Fuse (3.15A)
Tr	Transformer
49F1	Internal thermostat (indoor fan)
49F2	Internal thermostat (outdoor fan)
49C	Internal thermostat (compressor)
51C	Over current relay (compressor)
51F1,2	Over current relay(fanI/D,O/D)
63H	High-pressure switch
26L	Thermostat (freeze protection)
FZ	Auxiliary relay (fan)
CZ1, 2	Auxiliary relay (compressor)
30CZ, FZ	Auxiliary relay (check)
〈SW1〉	Switch (on)
〈23WA〉	Thermostat (room temp.)
C1～7	Connector
CR1, 2	Surge killer

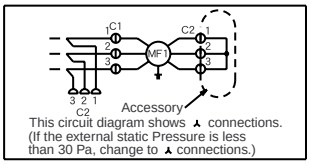

Note:1.The dotted lines show field wiring.
2.The figure in the parentheses show field supply parts.
3.Color of earth wire is yellow and green twisting.
4.Not specified color of wire is brown.
5.Specification subject to change without notice.

Caution,
1.To protect each Fan motor and Compressor from abnormal current, Over current relays <51C>, <51F1,2> are installed. Therefore, do not change factory set value of Over current relays.

Local controller connection.
(Ex.Type SHP-1)

Symbol	No.	Function	Local controller's terminal no.
TB4	1	Power (Active)	24V
	2	Cooling operation	Y1
	3	Fan operation	G
	4	Power (Neutral)	24V(C)

PEH-7MYA (STANDARD)

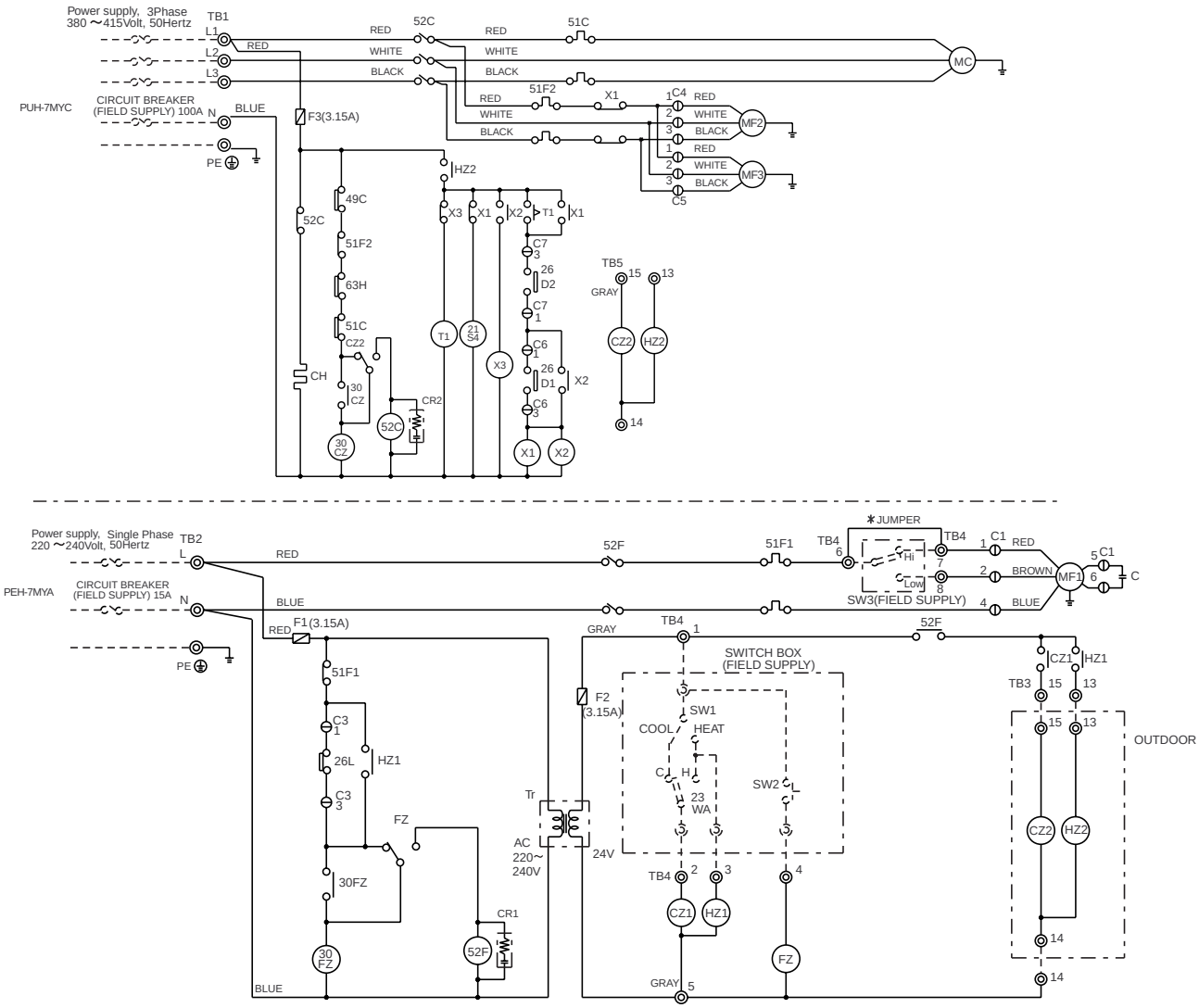

Symbol	Name
MC	Compressor motor
MF1	Fan motor (indoor)
MF2,3	Fan motor (outdoor)
52C	Contactor (compressor)
52F	Contactor (fan I/D)
TB1~5	Terminal block
CH	Crankcase heater
F1~3	Fuse (3.15A)
Tr	Transformer
49C	Internal thermostat (compressor)
51C	Over current relay (compressor)
51F1,2	Over current relay(fanI/D,O/D)
63H	High-pressure switch
26L	Thermostat (freeze protection)
26D1,2	Thermostat (defrost)
21S4	4-Way valve
FZ	Auxiliary relay (fan)
CZ1, 2	Auxiliary relay (compressor)
HZ1, 2	Auxiliary relay (4-way valve)
30CZ, FZ	Auxiliary relay (check)
X1	Contactor (fan O/D)
X2,3	Auxiliary relay (defrost)
〈SW1〉	Switch (operation mode)
〈SW2〉	Switch (on)
〈SW3〉	Switch (Fan Hi-Low)
〈23WA〉	Thermostat (room temp.)
C	Run capacitor
C1, C3~7	Connector
T1	Timer (defrost)
CR1, 2	Surge killer

Note:1.The dotted lines show field wiring.
2.The figure in the parentheses show field supply parts.
3.Color of earth wire is yellow and green twisting.
4.Not specified color of wire is brown.
5.Please remove the jumper wire (*Mark) in the above diagram if you use the Switch <SW3> at local.
If the Switch <SW3> is not used, the Fan motor (indoor) drives at high speed.
6.Specification subject to change without notice.

Caution,
1.To protect each Fan motor and Compressor from abnormal current, Over current relays <51C>, <51F1,2> are installed. Therefore, do not change factory set value of Over current relays.

Local controller connection.
(Ex.Type SHP-1)

Symbol	No.	Function	Local controller's terminal no.
TB4	1	Power (Active)	24V
	2	Cooling or Heating operation	Y1
	3	Reversing valve for Heating operation	B
	4	Fan operation	G
	5	Power (Neutral)	24V(C)

PEH-8,10MYA (STANDARD)

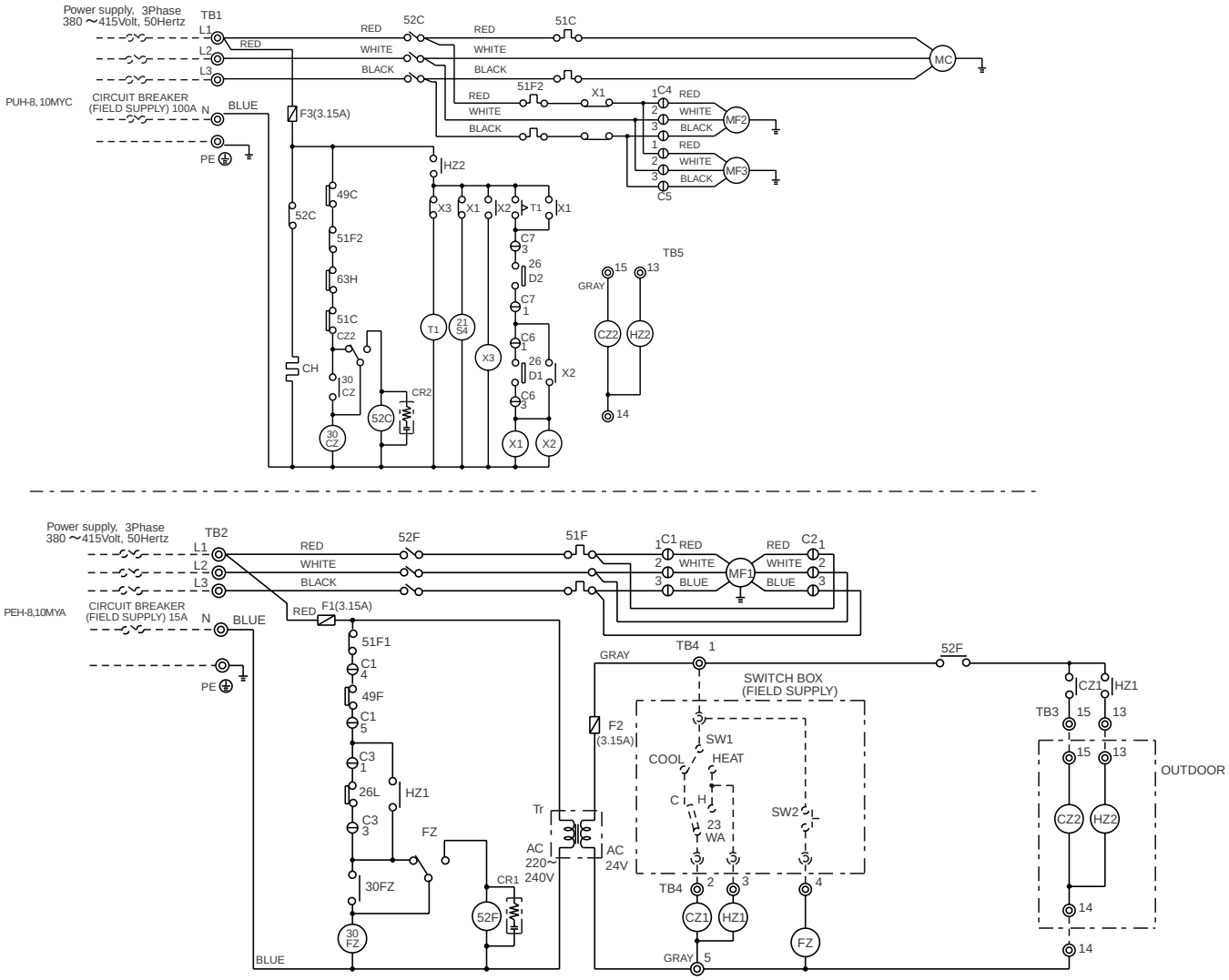

Symbol	Name
MC	Compressor motor
MF1	Fan motor (indoor)
MF2,3	Fan motor (outdoor)
52C	Contactor (compressor)
52F	Contactor (fan I/D)
TB1~5	Terminal block
CH	Crankcase heater
F1~3	Fuse (3.15A)
Tr	Transformer
49F	Internal thermostat (indoor fan)
49C	Internal thermostat (compressor)
51C	Over current relay (compressor)
51F1,2	Over current relay(fanI/D,O/D)
63H	High-pressure switch
26L	Thermostat (freeze protection)
26D1,2	Thermostat (defrost)
21S4	4-Way valve
FZ	Auxiliary relay (fan)
CZ1, 2	Auxiliary relay (compressor)
HZ1, 2	Auxiliary relay (4-way valve)
30CZ, FZ	Auxiliary relay (check)
X1	Contactor (fan O/D)
X2,3	Auxiliary relay (defrost)
〈SW1〉	Switch (operation mode)
〈SW2〉	Switch (on)
〈23WA〉	Thermostat (room temp.)
C1~7	Connector
T1	Timer (defrost)
CR1, 2	Surge killer

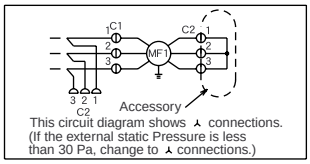

Note:1.The dotted lines show field wiring.
2.The figure in the parentheses show field supply parts.
3.Color of earth wire is yellow and green twisting.
4.Not specified color of wire is brown.
5.Specification subject to change without notice.

Caution,
1.To protect each Fan motor and Compressor from abnormal current, Over current relays <51C>, <51F1,2> are installed. Therefore, do not change factory set value of Over current relays.

Local controller connection.
(Ex.Type SHP-1)

Symbol	No.	Function	Local controller's terminal no.
TB4	1	Power (Active)	24V
	2	Cooling or Heating operation	Y1
	3	Reversing valve for Heating operation	B
	4	Fan operation	G
	5	Power (Neutral)	24V(C)

PEH-7MYA-K (STANDARD)

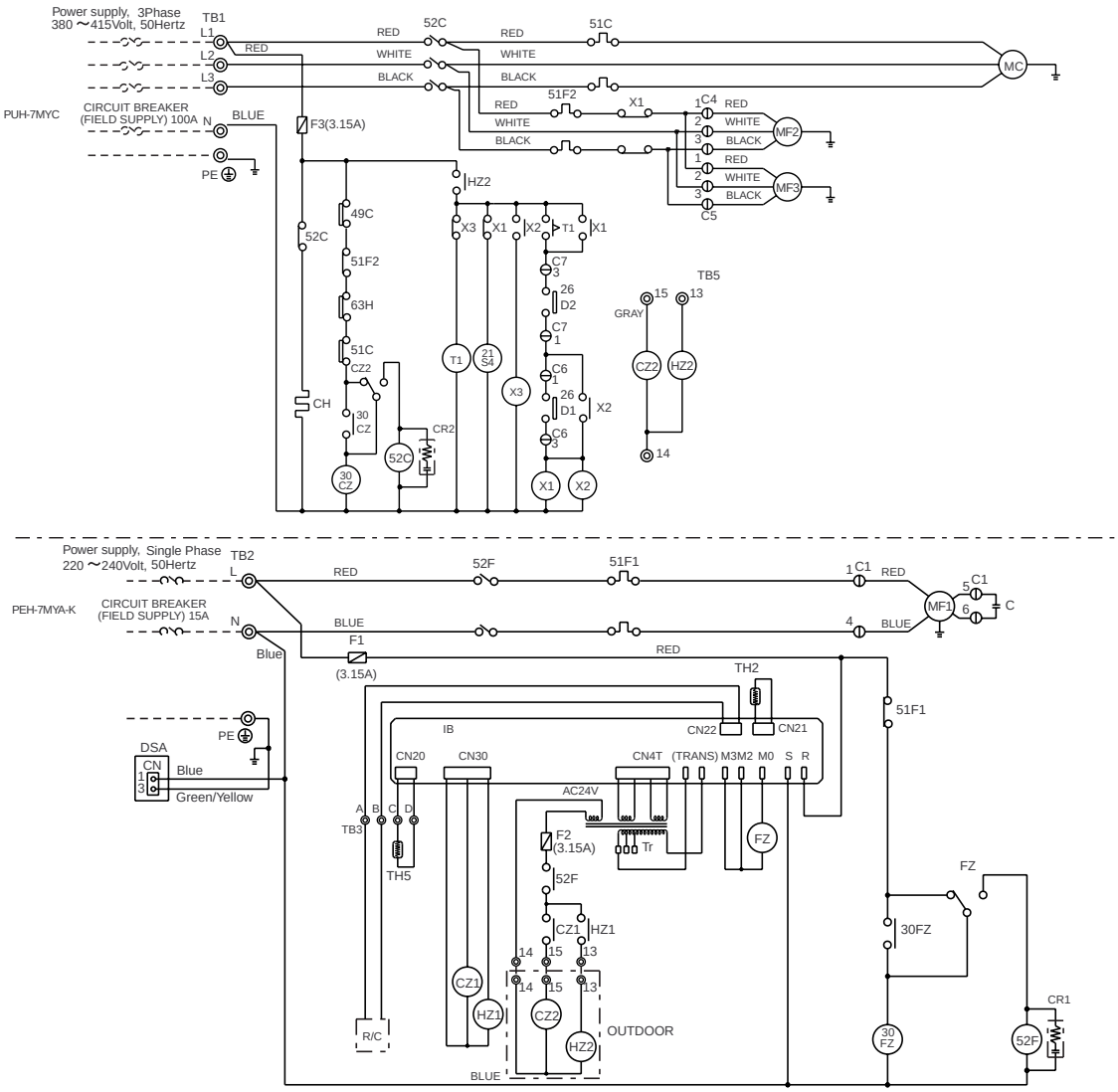

Symbol	Name
MC	Compressor motor
MF1	Fan motor (indoor)
MF2,3	Fan motor (outdoor)
52C	Contactor (compressor)
52F	Contactor (fan I/D)
TB1~3, 5	Terminal block
CH	Crankcase heater
F1~3	Fuse (3.15A)
Tr	Transformer
49C	Internal thermostat (compressor)
51C	Over current relay (compressor)
51F1,2	Over current relay(fanI/D,O/D)
63H	High-pressure switch
26D1,2	Thermostat (defrost)
21S4	4-Way valve
FZ	Auxiliary relay (fan)
CZ1, 2	Auxiliary relay (compressor)
HZ1, 2	Auxiliary relay (4way valve)
30CZ, FZ	Auxiliary relay (check)
X1	Contactor (fan O/D)
X2,3	Auxiliary relay (defrost)
IB	Indoor board
TH2	Thermistor (pipe)
TH5	Thermistor (room temp.)
R/C	Remote controller
DSA	Surge absorber circuit board
C	Run capacitor
C1,4~7	Connector
T1	Timer (defrost)
CR1, 2	Surge killer

Note:1.The dotted lines show field wiring.
2.The figure in the parentheses show field supply parts.
3.Color of earth wire is yellow and green twisting.
4.Not specified color of wire is brown.
5.Specification subject to change without notice.

Caution,
1.To protect each Fan motor and Compressor from abnormal current, Over current relays <51C>, <51F1,2> are installed. Therefore, do not change factory set value of Over current relays.

PEH-8,10MYA-K (STANDARD)

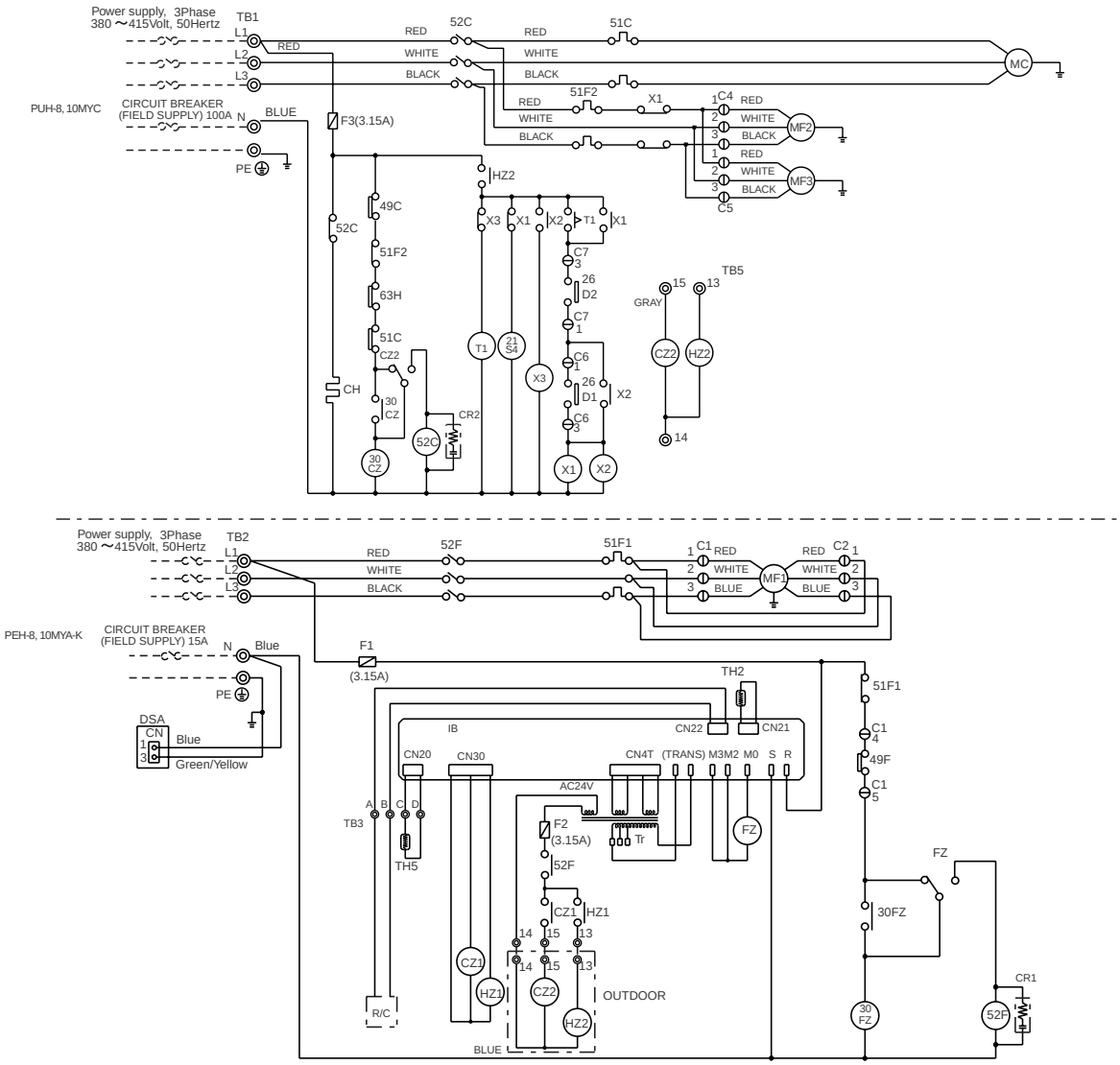

Symbol	Name
MC	Compressor motor
MF1	Fan motor (indoor)
MF2,3	Fan motor (outdoor)
52C	Contactor (compressor)
52F	Contactor (fan I/D)
TB1~3, 5	Terminal block
CH	Crankcase heater
F1~3	Fuse (3.15A)
Tr	Transformer
49F	Internal thermostat(indoor fan)
49C	Internal thermostat(compressor)
51C	Over current relay (compressor)
51F1,2	Over current relay(fanI/D,O/D)
63H	High-pressure switch
26D1,2	Thermostat (defrost)
21S4	4-Way valve
FZ	Auxiliary relay (fan)
CZ1, 2	Auxiliary relay (compressor)
HZ1, 2	Auxiliary relay (4-way valve)
30CZ, FZ	Auxiliary relay (check)
X1	Contactor (fan O/D)
X2,3	Auxiliary relay (defrost)
IB	Indoor board
TH2	Thermistor (pipe)
TH5	Thermistor (room temp.)
R/C	Remote controller
DSA	Surge absorber circuit board
C1,2,4~7	Connector
T1	Timer (defrost)
CR1, 2	Surge killer

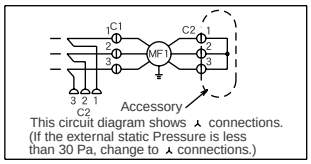

Note:1.The dotted lines show field wiring.
2.The figure in the parentheses show field supply parts.
3.Color of earth wire is yellow and green twisting.
4.Not specified color of wire is brown.
5.Specification subject to change without notice.

Caution,
1.To protect each Fan motor and Compressor from abnormal current, Over current relays <51C>, <51F1,2> are installed. Therefore, do not change factory set value of Over current relays.

PEH-7MYA
(SPECIAL ORDER :ANTI SHORT CYCLE TIMER., PROTECT FOR COOL AIR BLOW.)

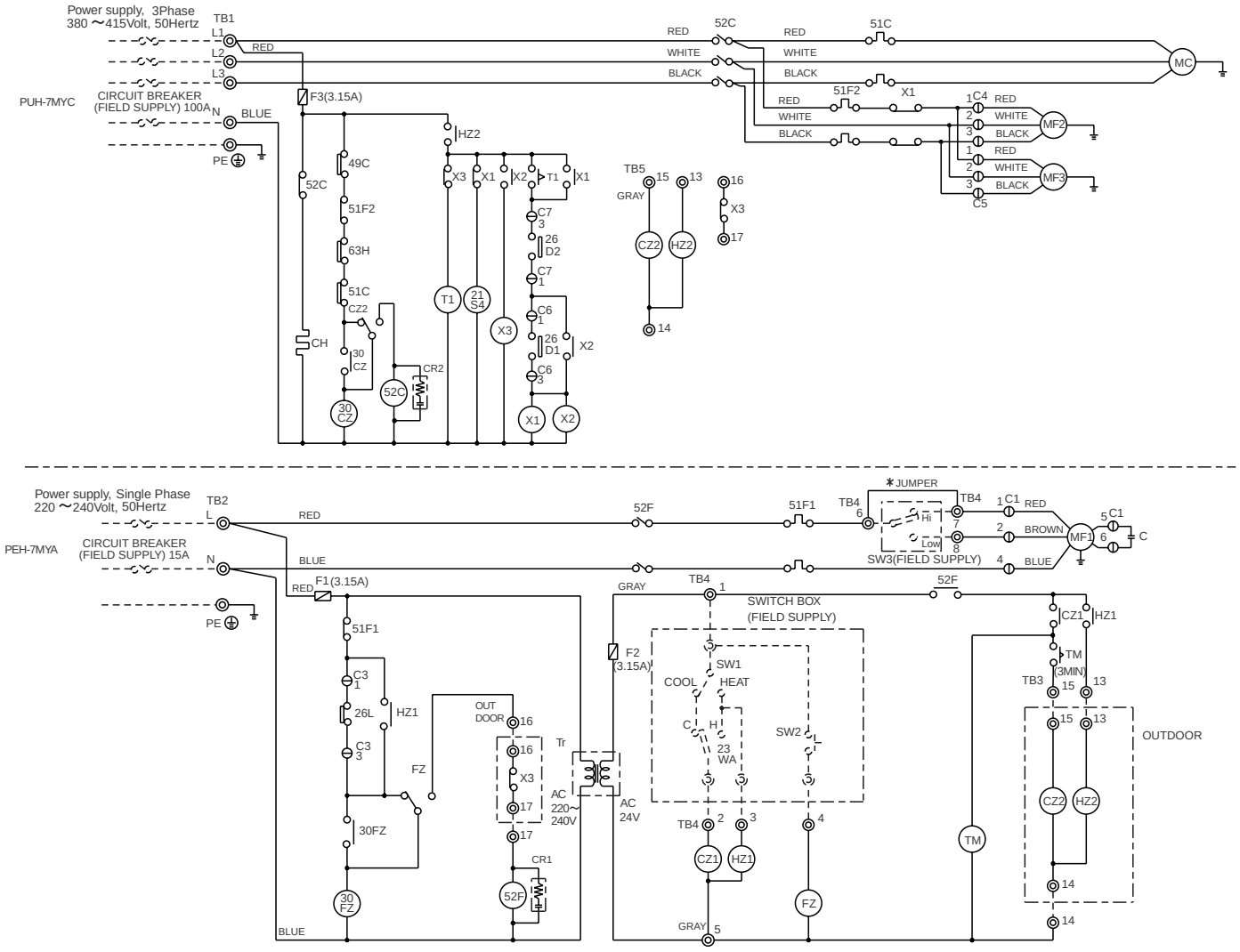

Symbol	Name
MC	Compressor motor
MF1	Fan motor (indoor)
MF2,3	Fan motor (outdoor)
52C	Contactor (compressor)
52F	Contactor (fan I/D)
TB1~5	Terminal block
CH	Crankcase heater
F1~3	Fuse (3.15A)
Tr	Transformer
49C	Internal thermostat (compressor)
51C	Over current relay (compressor)
51F1,2	Over current relay(fanI/D,O/D)
63H	High-pressure switch
26L	Thermostat (freeze protection)
26D1,2	Thermostat (defrost)
21S4	4-Way valve
FZ	Auxiliary relay (fan)
CZ1, 2	Auxiliary relay (compressor)
HZ1, 2	Auxiliary relay (4-way valve)
30CZ, FZ	Auxiliary relay (check)
X1	Contactor (fan O/D)
X2,3	Auxiliary relay (defrost)
〈SW1〉	Switch (operation mode)
〈SW2〉	Switch (on)
〈SW3〉	Switch (Fan Hi-Low)
〈23WA〉	Thermostat (room temp.)
C	Run capacitor
C1, 3~7	Connector
T1	Timer (defrost)
CR1, 2	Surge killer
TM	Timer (Anti short cycle)

Note:1.The dotted lines show field wiring.
2.The figure in the parentheses show field supply parts.
3.Color of earth wire is yellow and green twisting.
4.Not specified color of wire is brown.
5.Please remove the jumper wire (*Mark) in the above diagram if you use the Switch <SW3> at local. If the Switch <SW3> is not used, the Fan motor (indoor) drives at high speed.
6.Specification subject to change without notice.

Caution,
1.To protect each Fan motor and Compressor from abnormal current, Over current relays <51C>, <51F1,2> are installed. Therefore, do not change factory set value of Over current relays.

Local controller connection.
(Ex.Type SHP-1)

Symbol	No.	Function	Local controller's terminal no.
TB4	1	Power (Active)	24V
	2	Cooling or Heating operation	Y1
	3	Reversing valve for Heating operation	B
	4	Fan operation	G
	5	Power (Neutral)	24V(C)

PEH-8,10MYA
(SPECIAL ORDER :ANTI SHORT CYCLE TIMER., PROTECT FOR COOL AIR BLOW.)

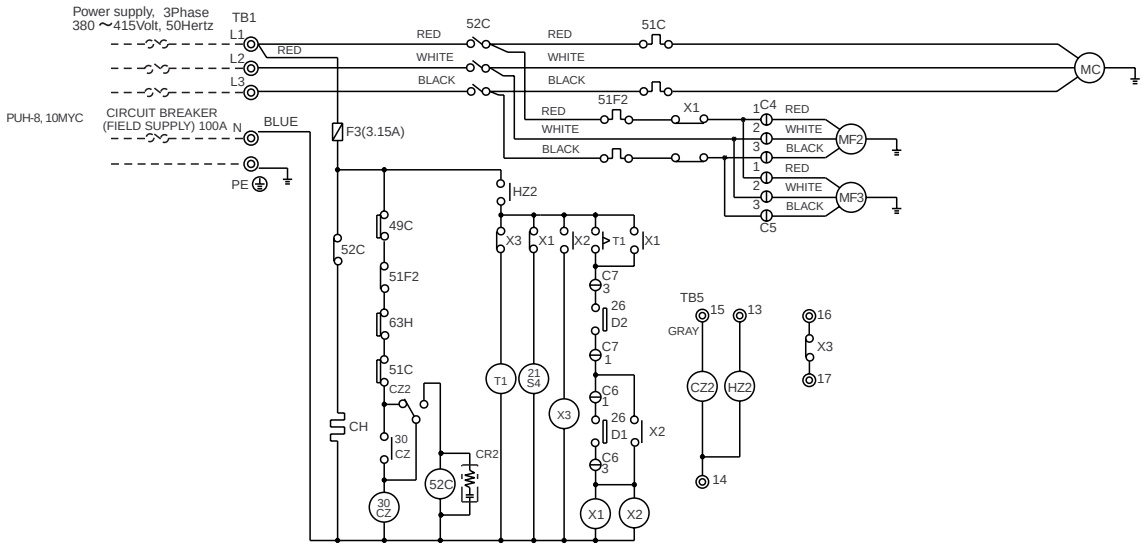

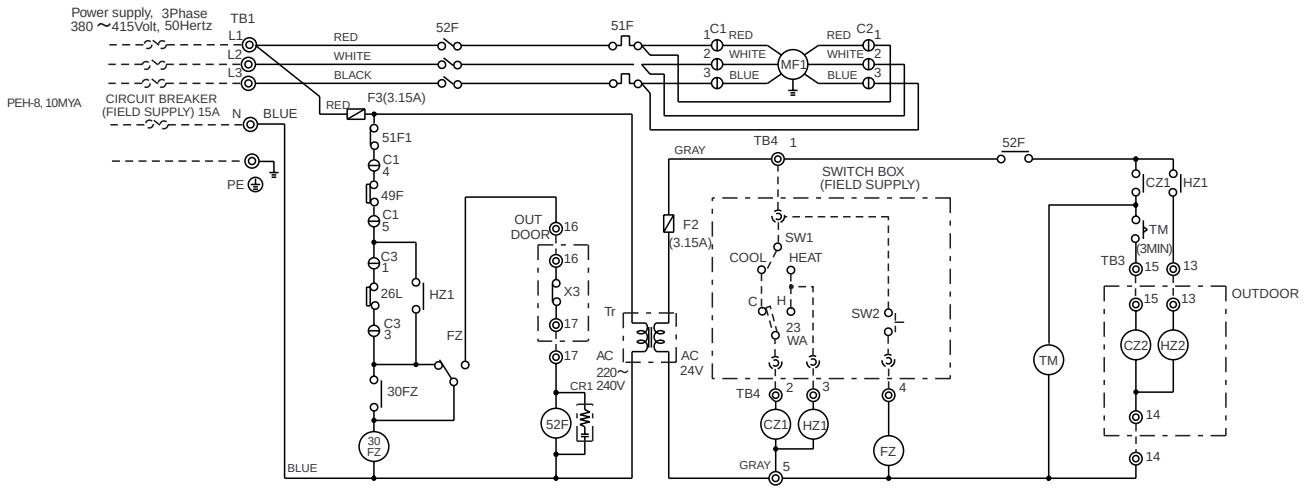

Symbol	Name
MC	Compressor motor
MF1	Fan motor (indoor)
MF2,3	Fan motor (outdoor)
52C	Contactor (compressor)
52F	Contactor (fan I/D)
TB1~5	Terminal block
CH	Crankcase heater
F1~3	Fuse (3.15A)
Tr	Transformer
49F	Internal thermostat (indoor fan)
49C	Internal thermostat (compressor)
51C	Over current relay (compressor)
51F1,2	Over current relay(fanI/D,O/D)
63H	High-pressure switch
26L	Thermostat (freeze protection)
26D1,2	Thermostat (defrost)
21S4	4-Way valve
FZ	Auxiliary relay (fan)
CZ1, 2	Auxiliary relay (compressor)
HZ1, 2	Auxiliary relay (4-way valve)
30CZ, FZ	Auxiliary relay (check)
X1	Contactor (fan O/D)
X2,3	Auxiliary relay (defrost)
〈SW1〉	Switch (operation mode)
〈SW2〉	Switch (on)
〈23WA〉	Thermostat (room temp.)
C1~7	Connector
T1	Timer (defrost)
CR1, 2	Surge killer
TM	Timer (Anti short cycle)

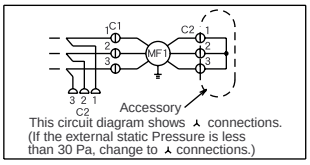

Note:1.The dotted lines show field wiring.
2.The figure in the parentheses show field supply parts.
3.Color of earth wire is yellow and green twisting.
4.Not specified color of wire is brown.
5.Specification subject to change without notice.

Caution,
1.To protect each Fan motor and Compressor from abnormal current, Over current relays <51C>, <51F1,2> are installed. Therefore, do not change factory set value of Over current relays.

Local controller connection.
(Ex.Type SHP-1)

Symbol	No.	Function	Local controller's terminal no.
TB4	1	Power (Active)	24V
	2	Cooling or Heating operation	Y1
	3	Reversing valve for Heating operation	B
	4	Fan operation	G
	5	Power (Neutral)	24V(C)

PEH-7MYA
(SPECIAL ORDER :LOW AMBIENT COOLING)

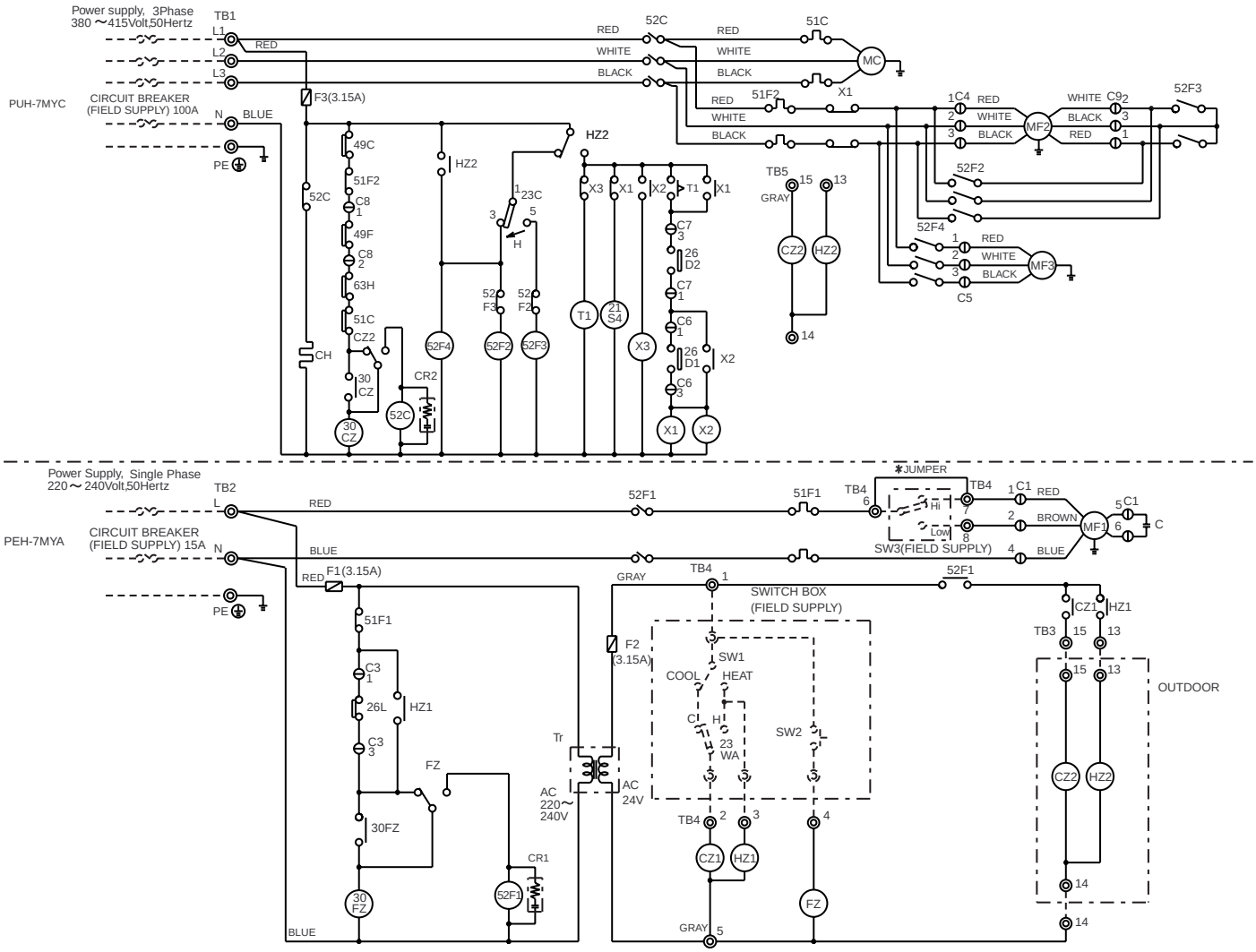

Symbol	Name	Symbol	Name
MC	Compressor motor	FZ	Auxiliary relay (fan)
MF1	Fan motor (indoor)	CZ1, 2	Auxiliary relay (compressor)
MF2, 3	Fan motor (outdoor)	HZ1, 2	Auxiliary relay (4-way valve)
52C	Contactor (compressor)	30CZ, FZ	Auxiliary relay (check)
52F1	Contactor (fan I/D)	X1	Contactor (fan O/D)
52F2, 3	Contactor (fan O/D)	X2, 3	Auxiliary relay (defrost)
52F4	Contactor (fan O/D)	<SW1>	Switch (operation mode)
23C	Ambient temperature	<SW2>	Switch (on)
TB1~5	Terminal block	<SW3>	Switch (Fan Hi-Low)
CH	Crankcase heater	<23WA>	Thermostat (room temp.)
F1~3	Fuse (3.15A)	C	Run capacitor
Tr	Transformer	C1, 3~9	Connector
49C	Internal thermostat (compressor)	T1	Timer (defrost)
49F	Internal thermostat (fan O/D)	CR1, 2	Surge killer
51C	Over current relay (compressor)	21S4	4-Way valve
51F1,2	Over current relay(fanI/D,O/D)	26D1, 2	Thermostat (defrost)
63H	High-pressure switch	26L	Thermostat (freeze protection)

Note:1.The dotted lines show field wiring.
2.The figure in the parentheses show field supply parts.
3.Color of earth wire is yellow and green twisting.
4.Not specified color of wire is brown.
5.Please remove the jumper wire (*Mark) in the above diagram if you use the Switch <SW3> at local.
If the Switch <SW3> is not used, the Fan motor (indoor) drives at high speed.
6.Specification subject to change without notice.

Caution,
1.To protect each Fan motor and Compressor from abnormal current, Over current relays <51C>, <51F1,2> are installed. Therefore, do not change factory set value of Over current relays.

Local controller connection.
(Ex.Type SHP-1)

Symbol	No.	Function	Local controller's terminal no.
TB4	1	Power (Active)	24V
	2	Cooling or Heating operation	Y1
	3	Reversing valve for Heating operation	B
	4	Fan operation	G
	5	Power (Neutral)	24V(C)

PEH-8,10MYA
(SPECIAL ORDER :LOW AMBIENT COOLONG)

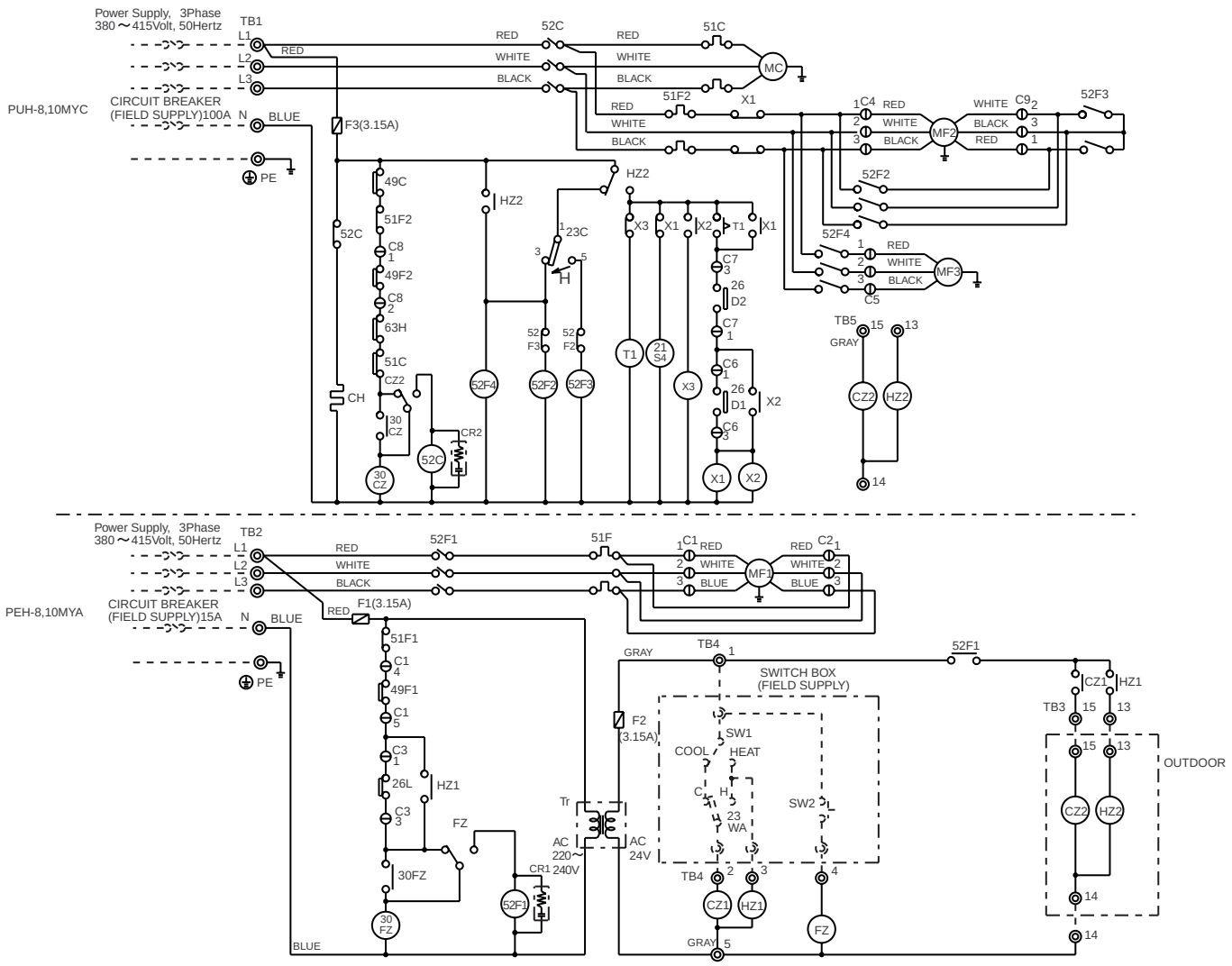

Symbol	Name	Symbol	Name
MC	Compressor motor	FZ	Auxiliary relay (fan)
MF1	Fan motor (indoor)	CZ1, 2	Auxiliary relay (compressor)
MF2, 3	Fan motor (outdoor)	HZ1, 2	Auxiliary relay (4-way valve)
52C	Contactor (compressor)	30CZ, FZ	Auxiliary relay (check)
52F1	Contactor (fan I/D)	X1	Contactor (fan O/D)
52F2, 3	Contactor (fan O/D)	X2, 3	Auxiliary relay (defrost)
52F4	Contactor (fan O/D)	<SW1>	Switch (operation mode)
23C	Ambient temperature	<SW2>	Switch (on)
TB1～5	Terminal block	<SW3>	Switch (Fan Hi-Low)
CH	Crankcase heater	<23WA>	Thermostat (room temp.)
F1～3	Fuse (3.15A)	63H	High-pressure switch
Tr	Transformer	C1～9	Connector
49C	Internal thermostat (compressor)	T1	Timer (defrost)
49F1	Internal thermostat (fan I/D)	CR1, 2	Surge killer
49F2	Internal thermostat (fan O/D)	21S4	4-Way valve
51C	Over current relay (compressor)	26D1, 2	Thermostat (defrost)
51F1,2	Over current relay(fanI/D,O/D)	26L	Thermostat (freeze protection)

Note:1.The dotted lines show field wiring.
2.The figure in the parentheses show field supply parts.
3.Color of earth wire is yellow and green twisting.
4.Not specified color of wire is brown.
5.Specification subject to change without notice.

Caution,
1.To protect each Fan motor and Compressor from abnormal current, Over current relays <51C>, <51F1,2> are installed. Therefore, do not change factory set value of Over current relays.

Local controller connection.
(Ex.Type SHP-1)

Symbol	No.	Function	Local controller's terminal no.
TB4	1	Power (Active)	24V
	2	Cooling or Heating operation	Y1
	3	Reversing valve for Heating operation	B
	4	Fan operation	G
	5	Power (Neutral)	24V(C)

ELECTRICAL OPERATION FLOW CHART

PE-7,8,10MYC (-K)

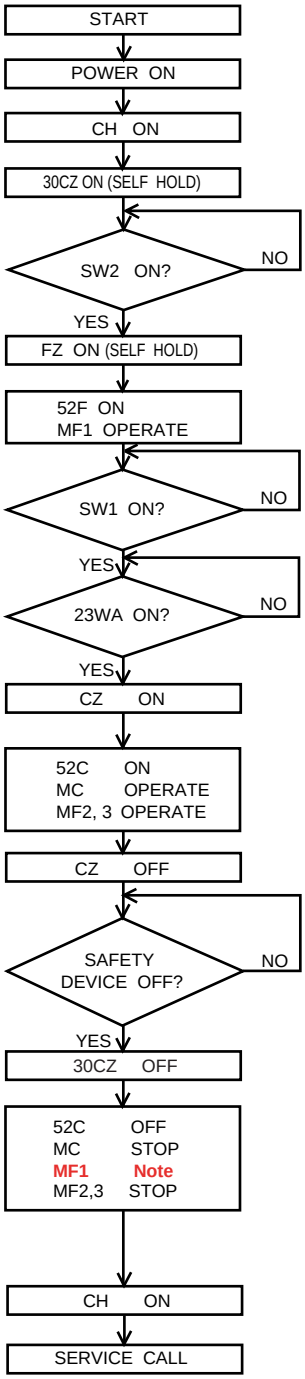

PEH-7,8,10MYA (-K)

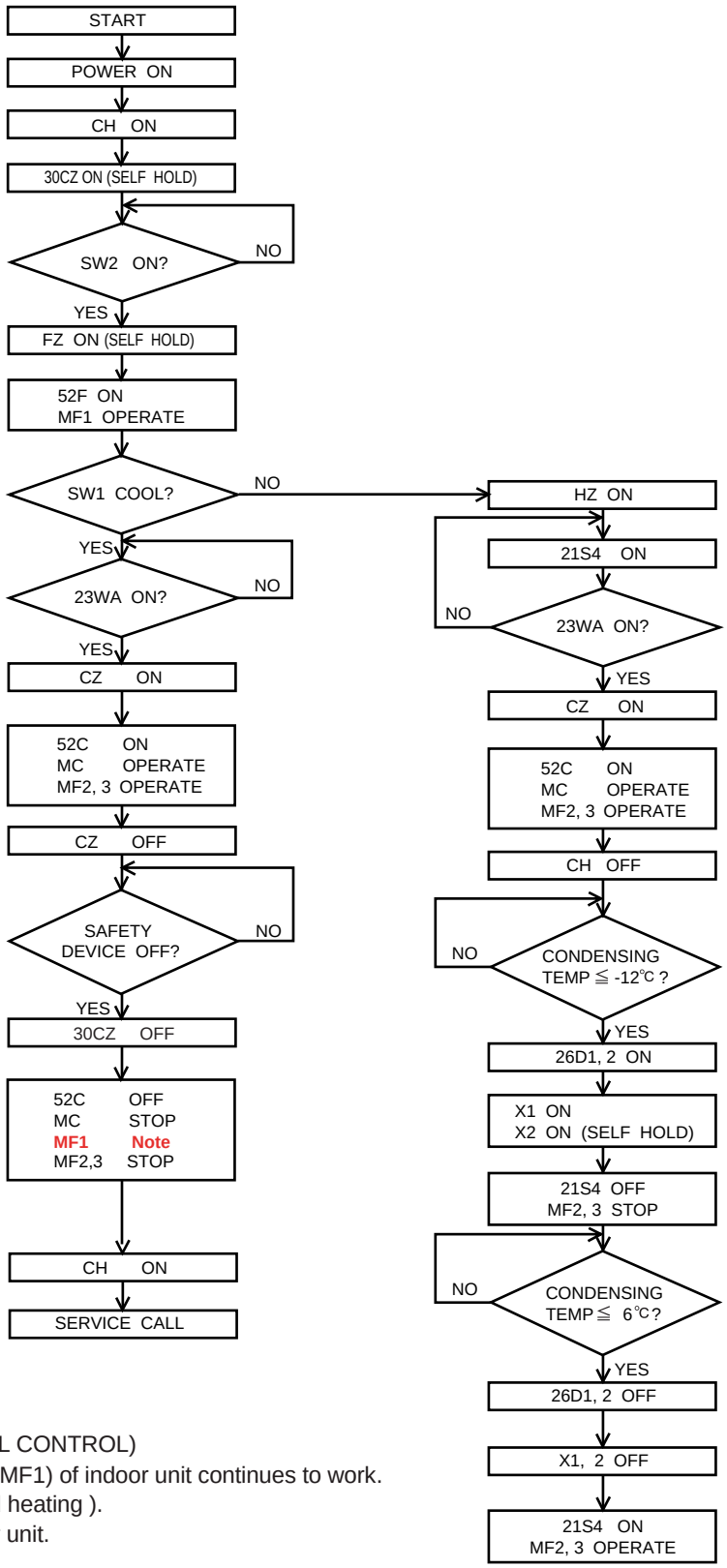

Note.

1. PE-7,8,10MYC,PEH-7,8,10MYA (MECHANICAL CONTROL)
   When the fault of outdoor unit is occurred, the fan(MF1) of indoor unit continues to work.
   But the unit doesn't work correctly (not cooling and heating).
   Then, turn off the power supply and check outdoor unit.

2. PE-7,8,10MYC-K,PEH-7,8,10MYA-K (K CONTROL)
   When the fault of outdoor unit is occurred, the fan(MF1) of indoor unit continues to work only in cooling mode.
   In addition, the error code (“P8”) of outdoor unit will be appeared on the remote controller.
   Then, turn off the power supply and check outdoor unit.

REFRIGERATION SCHEMATICS

PE-7,8,10

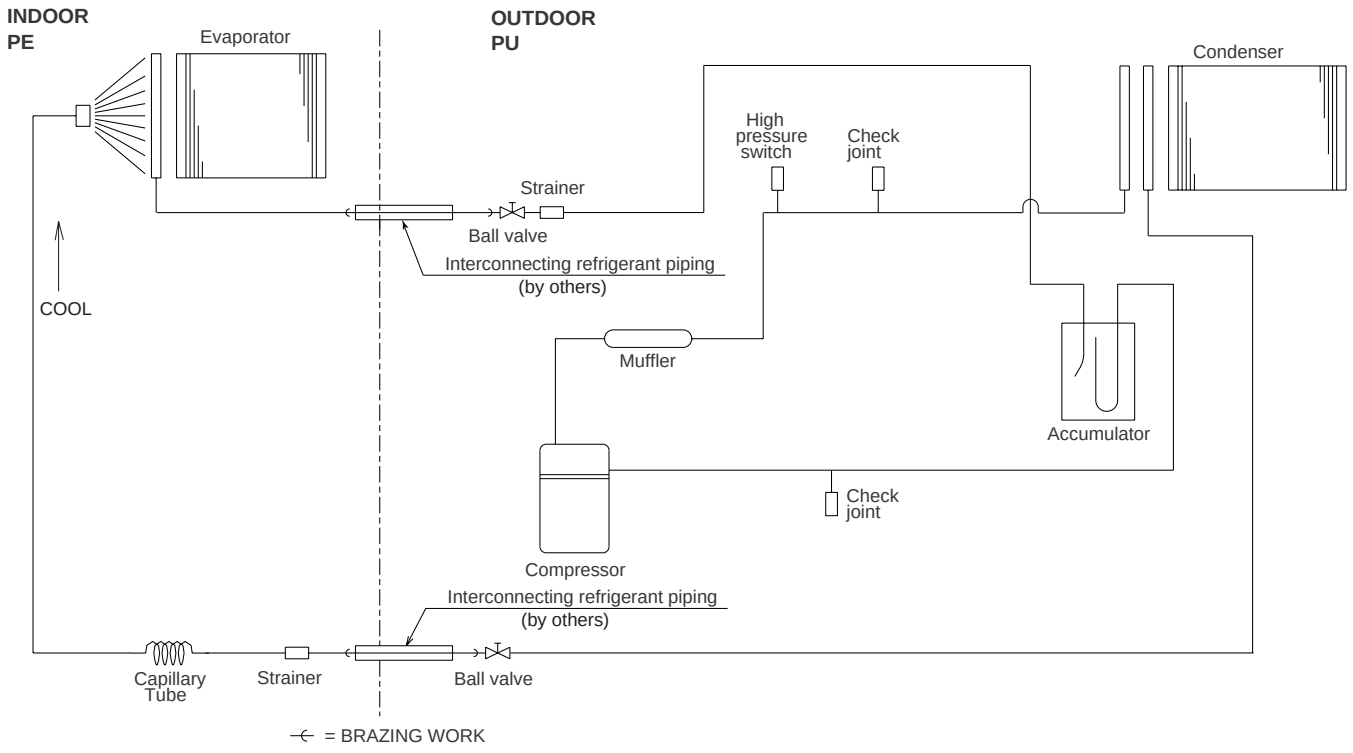

PEH-7,8,10

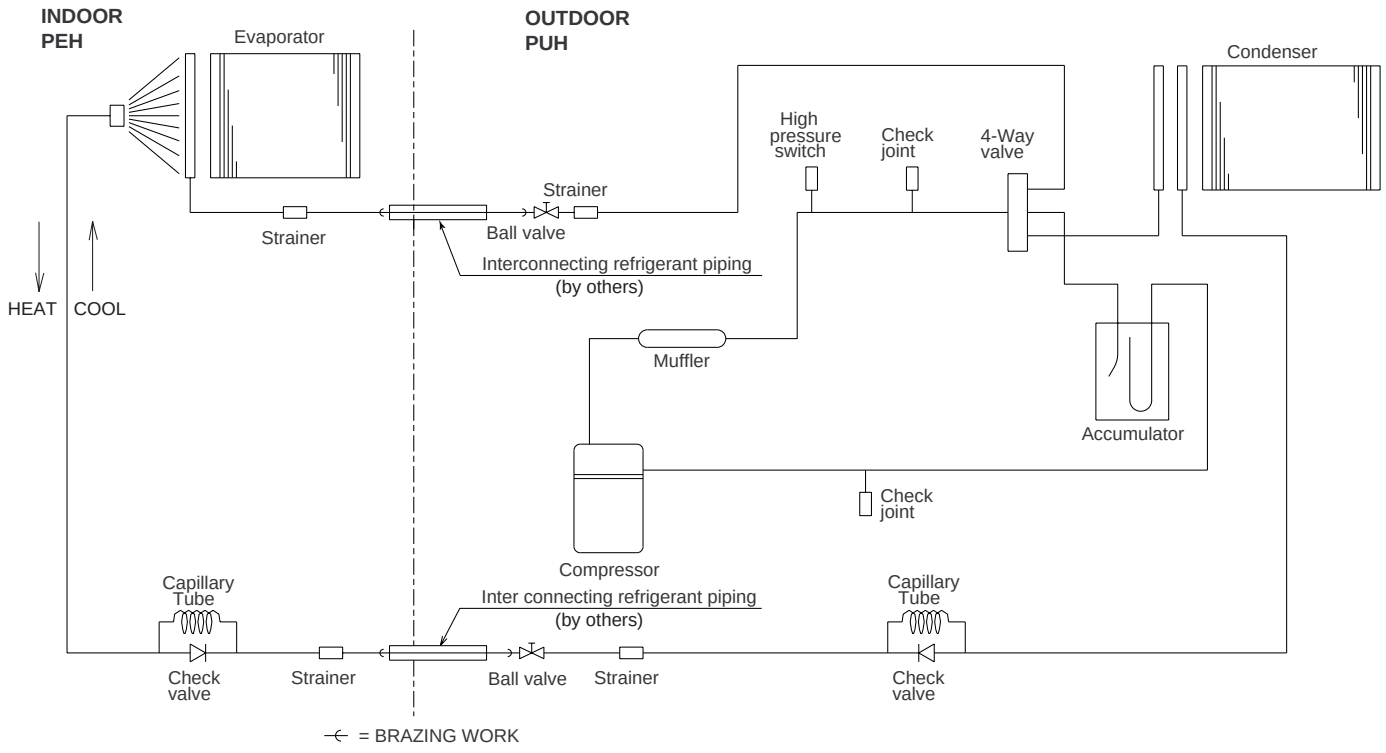

SAFETY & CONTROL DEVICES

PE-7,8,10

ITEM	NO.	PE-7MYC(-K) PU-7MYC	PE-8MYC(-K) PU-8MYC	PE-10MYC(-K) PU-10MYC
COMPRESSOR OVER CURRENT RELAY	51C	16.0A	18.0A	22.0A
COMPRESSOR INTERNAL THERMOSTAT	49C	105±5℃ OFF 83±11℃ ON		
HIGH PRESSURE SWITCH	63H	2.94MPa OFF		
FREEZE PROTECTOR	26L	-2±3℃ OFF		
INDOOR FAN MOTOR OVER CURRENT RELAY	51F1	3.5A	3.5A	5.0A
OUTDOOR FAN MOTOR OVER CURRENT RELAY	51F2	2.5A		
OUTDOOR FAN MOTOR INTERNAL THERMOSTAT	-	150℃OFF		
FUSE	F1～3	3.15A		

PEH-7,8,10

ITEM	NO.	PEH-7MYA(-K) PUH-7MYC	PEH-8MYA(-K) PUH-8MYC	PEH-10MYA(-K) PUH-10MYC
COMPRESSOR OVER CURRENT RELAY	51C	16.0A	18.0A	22.0A
COMPRESSOR INTERNAL THERMOSTAT	49C	105±5℃ OFF 83±11℃ ON		
HIGH PRESSURE SWITCH	63H	2.94MPa OFF		
FREEZE PROTECTOR	26L	-2±3℃OFF		
FROST PROTECTOR	26D1	-12±2℃ ON		
	26D2	6±2℃ OFF		
INDOOR FAN MOTOR OVER CURRENT RELAY	51F1	3.5A	3.5A	5.0A
OUTDOOR FAN MOTOR OVER CURRENT RELAY	51F2	2.5A		
OUTDOOR FAN MOTOR INTERNAL THERMOSTAT	-	150℃OFF		
FUSE	F1～3	3.15A		

SPECIAL ORDER

DESCRIPTION	MODEL NAME					
	PE-7MYC PEH-7MYA	PE-8MYC PEH-8MYA	PE-10MYC PEH-10MYA	PE-7MYC-K PEH-7MYA-K	PE-8MYC-K PEH-8MYA-K	PE-10MYC-K PEH-10MYA-K
Low Ambient Cooling	○	○	○	○	○	○
K-Remote Controller	—	—	—	○	○	○
Anti short cycle timer	○	○	○	Std.	Std.	Std.
Protect for cool air blow	○ (PEH ONLY)	○ (PEH ONLY)	○ (PEH ONLY)	○ (PEH ONLY)	○ (PEH ONLY)	○ (PEH ONLY)

PHYSICAL DATA

PE-7,8,10

[PRODUCT]	PACKAGE AIR COOLED HEATPUMP UNITS			
Product type	PE SERIES			
Product number : Indoor unit		PE-7MYC(-K)	PE-8MYC(-K)	PE-10MYC(-K)
Outdoor unit		PU-7MYC	PU-8MYC	PU-10MYC
Cooling capacity (AS1861)	kW	17.9	22.0	28.8
Sensible Cooling capacity (AS1861)	kW	14.3	17.6	23.0
Cooling power consumption (Input)	kW	7.2	7.8	10.1
Basic temperature condition cooling Indoor		27℃ DB/19℃ WB		
Basic temperature condition cooling Outdoor		35℃ DB		
[ELECTRICAL]				
<Indoor unit>				
Design voltage	Volts	240	415	
Cycles	Hz	50		
Power supply	Volts	1PH-240V	3PH-415V	
Control voltage		240/24		
Voltage change Max.	Volts	240	415	
Voltage change Min.	Volts	220	380	
Fan motor	HP(kW)	0.16(0.12)	0.52(0.39)	0.75(0.56)
Fan motor current	Amps	3.2	1.2	2.0
<Outdoor unit>				
Design voltage	Volts	415		
Cycles	Hz	50		
Power supply	Volts	3PH-415V		
Voltage change Max.	Volts	415		
Voltage change Min.	Volts	380		
Approx. starting current	Amps	74	83	82
Unit current (Nominal voltage and AS1861 maximum conditions)	Amps	13.2	13.9	18.9
Fan motor hp	HP(kW)	0.13(0.10)	0.13(0.10)	0.22(0.16)
Fan motor current	Amps	0.7		1.0
[COMPRESSOR]				
Make		MITSUBISHI		
Model		JH519YE	JH521YE	JH527YE
Type		HERMETIC LINE START (RECIPROCATING)		
Number of compressor		1		
Nominal motor	HP(kW)	5.5(4.1)		7.5(5.6)
Locked rotor current	Amps	76	83	85
Normal run current (AS1861)	Amps	13.0	15.5	19.2
Swept volume	cc/rev	149	171.3	214.1
Bore	mm	44.45		
Stroke	mm	24.0	25.9	27.6
Speed	rpm	2900		
Number of cylinders		4		5
Oil charge	ml	3000		4500
Type of oil		DIAMOND MS32(N-1) OR SUNISO 3GS(D)		
Crankcase heater	watts	62		72
[REFRIGERATION SYSTEM]				
Refrigerant		R22		
Refrigerant charge per circuit	kg	5.7	5.0	8.7
Number of refrigerant control		1		
Refrigerant control		Capillary tube		
Defrost system		Reverse cycle defrost		
Limit of pipe's length	m	50		
Limit of pipe's height difference	mtrs	20 (In case of indoor unit above outdoor unit)		
	mtrs	30 (In case of outdoor unit above indoor unit)		

Product number	Indoor unit Outdoor unit		PE-7MYC(-K) PU-7MYC	PE-8MYC(-K) PU-8MYC	PE-10MYC(-K) PU-10MYC
[INDOOR AIR CIRCUIT]					
Number of blowers			2		
Diameter of blower		mm	250		
Width of blowers		mm	245	275	
Blower drive			Direct drive		
Fan motor output		kW	0.21	0.70	1.00
Fan motor run current		A	3.2	1.2	2.0
Air quantity		L/s	1000	1167	1500
External static pressure		Pa	125		
Supply air dimensions(hxw)		mm	341 X 1102		341 X 1302
Return air dimensions(hxw)		mm	248 X 998		
[EVAPORATOR]					
Number of evaporator			1		
Face area		sq.m	0.42		0.50
Rows deep			4		
Rows high			15		
Finned length		mm	1100		1300
Face velocity		m/s	2.2	2.8	3.0
Fin per meter			474		513
Fin material thickness		mm	0.12		
Fin material/Type			Aluminium / Ring		
Tube diameter		mm	9.52		
Gauge of copper tube		mm	0.35		
Pipe type			Plain tube		
Number of circuit			10		
[OUTDOOR AIR CIRCUIT]					
Number of fans			2		
Diameter of fan		mm	600		
Blower drive			Direct drive		
Quantity of motor			2		
Fan motor output		kW	0.09X2	0.15X2	
Fan motor run current		A	0.7	1.0	
Air quantity		L/s	3167	3500	3667
[CONDENSER]					
Number of condensers			2		
Face area		sq.m	2.1 X 2		
Rows deep			1		2
Rows high			30	32	30
Finned length		mm	2706		2696
Face velocity		m/s	1.35	1.54	
Fin per meter/Pitch			474 / 2.7	625 / 1.6	538 / 1.86
Fin material thickness		mm	0.12		
Fin material/Type			Aluminium / Ring		
Tube diameter/Gauge		mm	9.52 / 0.35		
Pipe type			Groove tube		
Number of circuit			7		11

Product number	Indoor unit		PE-7MYC(-K)	PE-8MYC(-K)	PE-10MYC(-K)
	Outdoor unit		PU-7MYC	PU-8MYC	PU-10MYC
[ENCLOSURE AND FRAME]					
Dimension Indoor unit	height	mm	428		
	width	mm	1415		1615
	depth	mm	650		
Dimension Outdoor unit	height	mm	980		
	width	mm	1400		
	depth	mm	700		
Colour			Munsell 5Y8/1		
Panel thickness		mm	1.2		
Condense drain size		mm	25.4		
Weight Indoor unit		kg	67	70	84
Weight Outdoor unit		kg	202	205	230
Sound pressure level (indoor unit)		dbA	55	56	59
Sound pressure level (outdoor unit)		dbA	65	65	65
Sound power level (indoor unit)		dbA	62	64	67
Sound power level (outdoor unit)		dbA	76	76	76

PEH-7,8,10

[PRODUCT]		PACKAGE AIR COOLED HEATPUMP UNITS		
Product type		PEH SERIES		
Product number : Indoor unit		PEH-7MYA(-K)	PEH-8MYA(-K)	PEH-10MYA(-K)
Outdoor unit		PUH-7MYC	PUH-8MYC	PUH-10MYC
Cooling capacity (AS1861)	kW	17.9	22.0	28.8
Sensible Cooling capacity (AS1861)	kW	14.3	17.6	23.0
Cooling power consumption (Input)	kW	7.2	7.8	10.1
Heating capacity (AS1861)	kW	18.8	22.0	28.8
Heating power consumption	kW	6.3	6.5	8.3
Basic temperature condition cooling Indoor		27℃ DB/19℃ WB		
Basic temperature condition cooling Outdoor		35℃ DB		
Basic temperature condition heating Indoor		21℃ DB		
Basic temperature condition heating Outdoor		7℃ DB/6℃ WB		
[ELECTRICAL]				
<Indoor unit>				
Design voltage	Volts	240	415	
Cycles	Hz	50		
Power supply	Volts	1PH-240V	3PH-415V	
Control voltage		240/24		
Voltage change Max.	Volts	240	415	
Voltage change Min.	Volts	220	380	
Fan motor	HP(kW)	0.16(0.12)	0.52(0.39)	0.75(0.56)
Fan motor current	Amps	3.2	1.2	2.0
<Outdoor unit>				
Design voltage	Volts	415		
Cycles	Hz	50		
Power supply	Volts	3PH-415V		
Voltage change Max.	Volts	415		
Voltage change Min.	Volts	380		
Approx. starting current	Amps	74	83	82
Unit current (Nominal voltage and AS1861 maximum conditions)	Amps	13.2	13.9	18.9
Fan motor hp	HP(kW)	0.13(0.10)	0.13(0.10)	0.22(0.16)
Fan motor current	Amps	0.7		1.0
[COMPRESSOR]				
Make		MITSUBISHI		
Model		JH519YE	JH521YE	JH527YE
Type		HERMETIC LINE START (RECIPROCATING)		
Number of compressor		1		
Nominal motor	HP(kW)	5.5(4.1)		7.5(5.6)
Locked rotor current	Amps	76	83	85
Normal run current (AS1861)	Amps	13.0	15.5	19.2
Swept volume	cc/rev	149	171.3	214.1
Bore	mm	44.45		
Stroke	mm	24.0	25.9	27.6
Speed	rpm	2900		
Number of cylinders		4		5
Oil charge	ml	3000		4500
Type of oil		DIAMOND MS32(N-1) OR SUNISO 3GS(D)		
Crankcase heater	watts	62		72
[REFRIGERATION SYSTEM]				
Refrigerant		R22		
Refrigerant charge per circuit	kg	5.7	6.6	9.9
Number of refrigerant control		1		
Refrigerant control		Capillary tube		
Reverse cycle valve		4-Way valve		
Defrost system		Reverse cycle defrost		
Limit of pipe's length	m	50		
Limit of pipe's height difference	mtrs	20 (In case of indoor unit above outdoor unit)		
	mtrs	30 (In case of outdoor unit above indoor unit)		

Product number	Indoor unit		PEH-7MYA(-K)	PEH-8MYA(-K)	PEH-10MYA(-K)
	Outdoor unit		PUH-7MYC	PUH-8MYC	PUH-10MYC
[INDOOR AIR CIRCUIT]					
Number of blowers			2		
Diameter of blower		mm	250		
Width of blowers		mm	245	275	
Blower drive			Direct drive		
Fan motor output		kW	0.21	0.70	1.00
Fan motor run current		A	3.2	1.2	2.0
Air quantity		L/s	1000	1167	1500
External static pressure		Pa	125		
Supply air dimensions(hxw)		mm	341 X 1102		341 X 1302
Return air dimensions(hxw)		mm	248 X 998		
[EVAPORATOR]					
Number of evaporator			1		
Face area		sq.m	0.42		0.50
Rows deep			4		
Rows high			15		
Finned length		mm	1100		1300
Face velocity		m/s	2.2	2.8	3.0
Fin per meter			474		513
Fin material thickness		mm	0.12		
Fin material/Type			Aluminium / Ring		
Fin coating			NA 510 D		
Tube diameter		mm	9.52		
Gauge of copper tube		mm	0.35		
Pipe type			Plain tube		
Number of circuit			10		
[OUTDOOR AIR CIRCUIT]					
Number of fans			2		
Diameter of fan		mm	600		
Blower drive			Direct drive		
Quantity of motor			2		
Fan motor output		kW	0.09X2		0.15X2
Fan motor run current		A	0.7		1.0
Air quantity		L/s	2783		3167
[CONDENSER]					
Number of condenser			2		
Face area		sq.m	2.1 X 2		
Rows deep			2		3
Rows high			30		
Finned length		mm	2706		2696
Face velocity		m/s	1.35		1.54
Fin per meter/Pitch			474 / 2.11		
Fin material thickness		mm	0.12		
Fin material/Type			Aluminium / Ring		
Tube diameter/Gauge		mm	9.52 / 0.35		
Pipe type			Groove tube		
Number of circuit			7		11

Product number	Indoor unit		PEH-7MYA(-K)	PEH-8MYA(-K)	PEH-10MYA(-K)
	Outdoor unit		PUH-7MYC	PUH-8MYC	PUH-10MYC
[ENCLOSURE AND FRAME]					
Dimension Indoor unit	height	mm	428		
	width	mm	1415		1615
	depth	mm	650		
Dimension Outdoor unit	height	mm	980		
	width	mm	1400		
	depth	mm	700		
Colour			Munsell 5Y8/1		
Panel thickness		mm	1.2		
Condense drain size		mm	25.4		
Weight Indoor unit		kg	67	70	84
Weight Outdoor unit		kg	211	214	240
Sound pressure level (indoor unit)		dbA	55	56	59
Sound pressure level (outdoor unit)		dbA	65	65	65
Sound power level (indoor unit)		dbA	62	64	67
Sound power level (outdoor unit)		dbA	76	76	76

OPERATION RANGE

<Standard>

Cooling

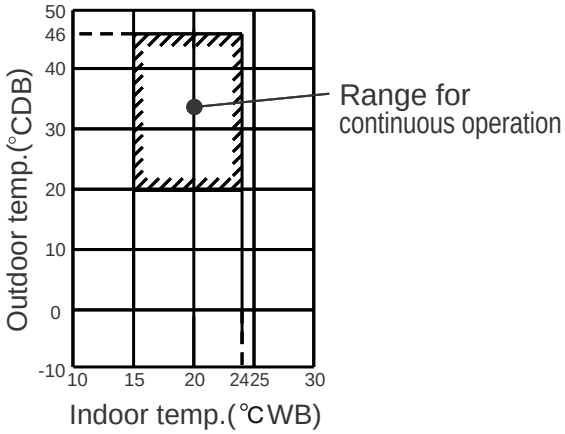

Heating (PEH only)

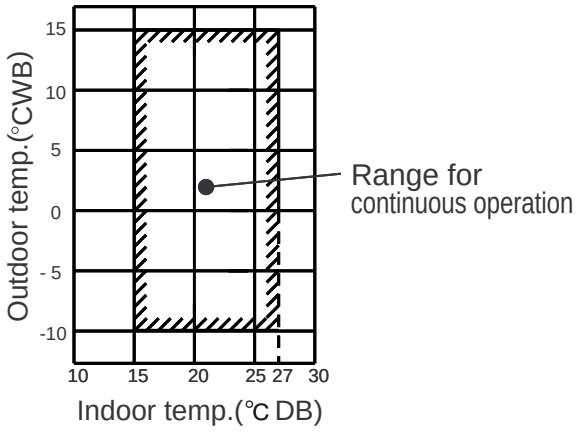

<LOW Ambient Option Range>

Cooling

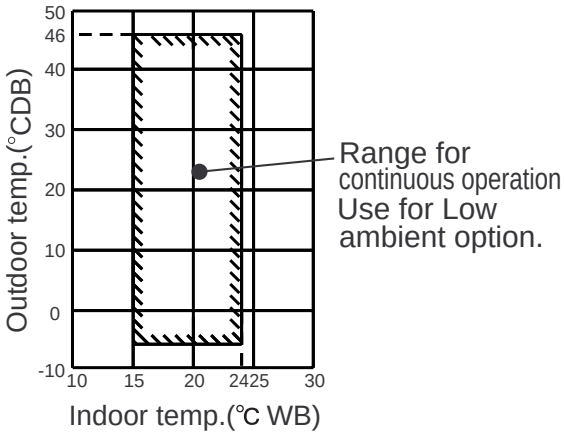

Heating (PEH only)

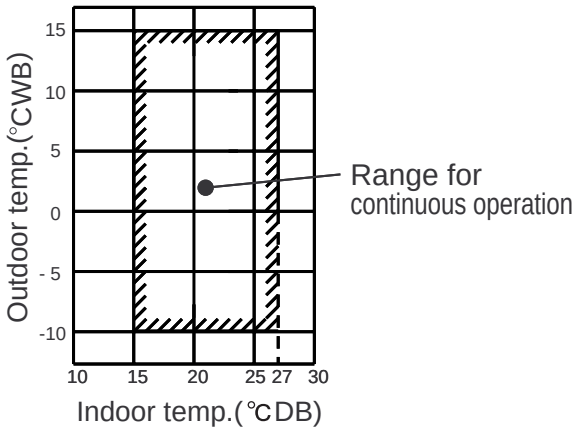

INSTALLATION

1. Space required around unit.

Indoor unit

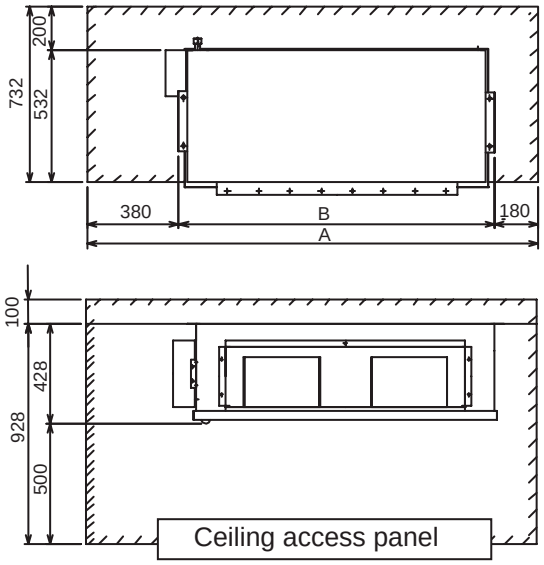

	A	B
PE(H)-7, 8	1880	1320
PE(H)-10	2080	1520

Outdoor unit

(1) At a single installation

The obstacle is on the outlet side. (Fig 1)
The obstacle is in three directions. (Fig 2,3)
The obstacle is in four directions. (Fig 4)

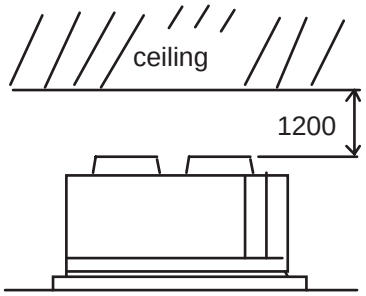

Fig 1

The right and left side and the back and forth side must be opened.

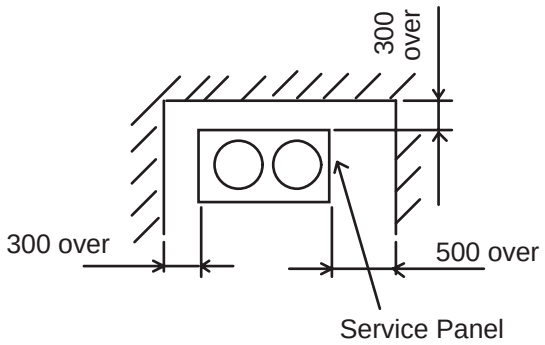

Fig 2

However, the outlet side must be opened.

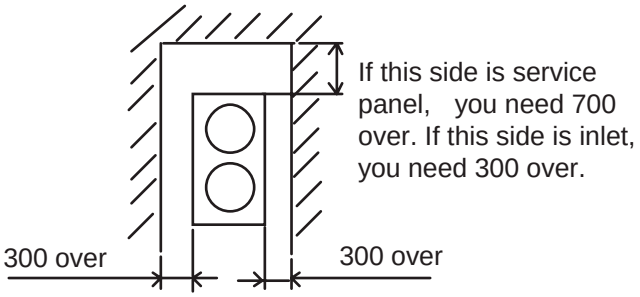

Fig 3

However, if the service panel is an interior side, the right or left side need 500 over.

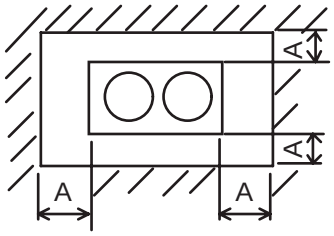

Fig 4

All "A" is 500 over.
However, outlet side must be opened.
And the obstacle in two directions must be lower than the unit.

(2) Relation of unit when many set up unit. (Fig 5,6,7)

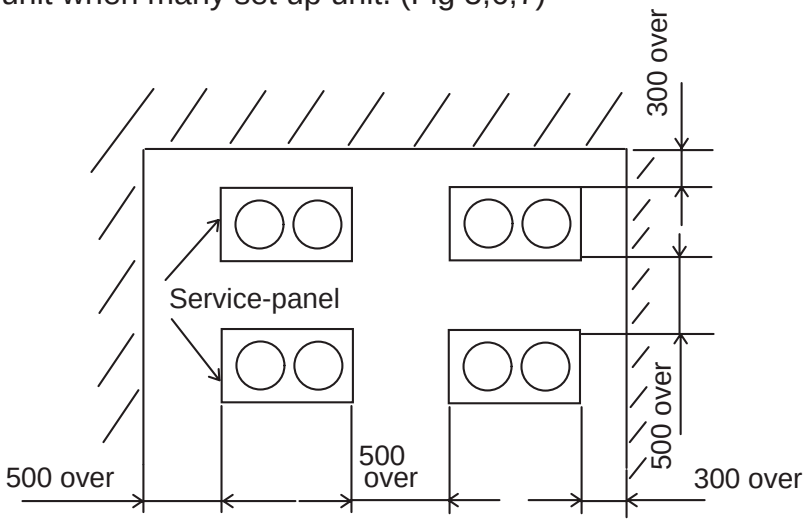

Fig 5

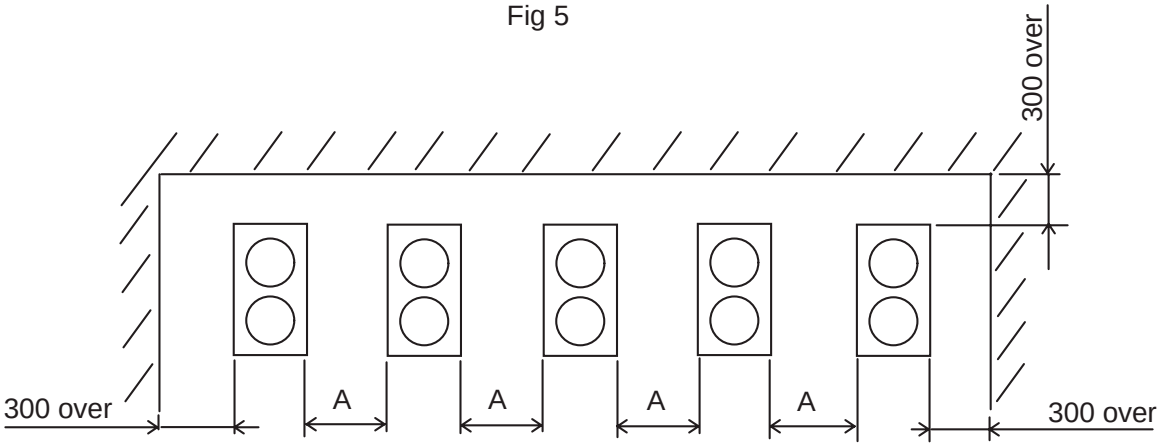

Fig 6 All "A" is 500 over.

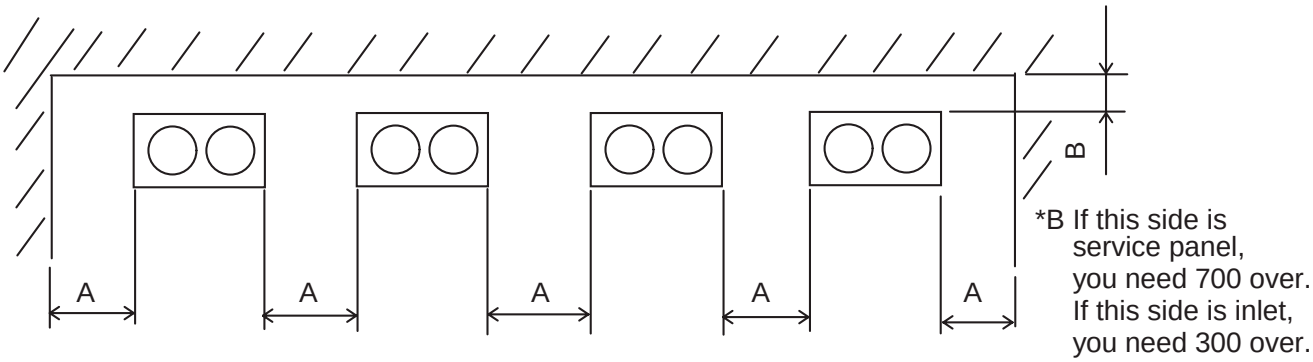

Fig 7 All "A" is 500 over in any case.

2. Preparation before installing

Indoor unit

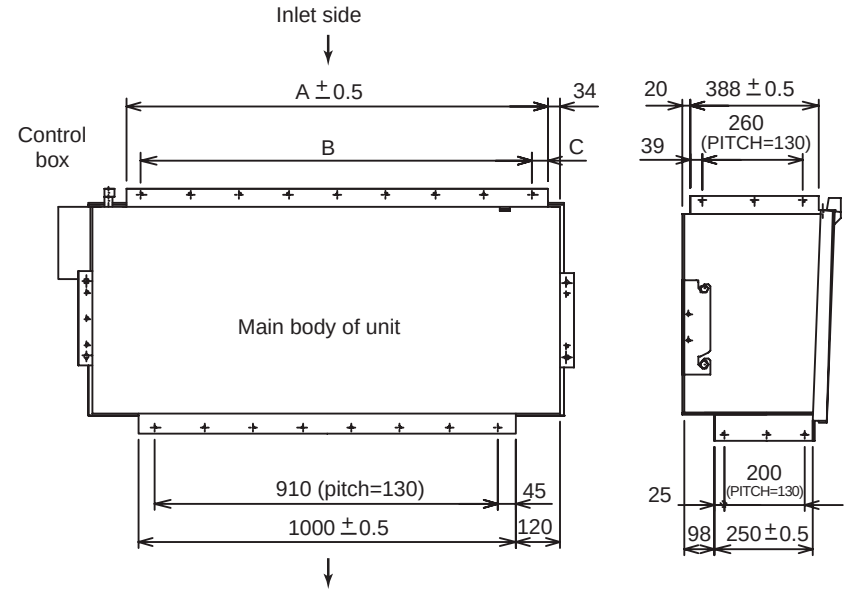

	A	B	C
PE(H)-7,8	1118	1040	39
PE(H)-10	1318	1170	74

B pitch is 130

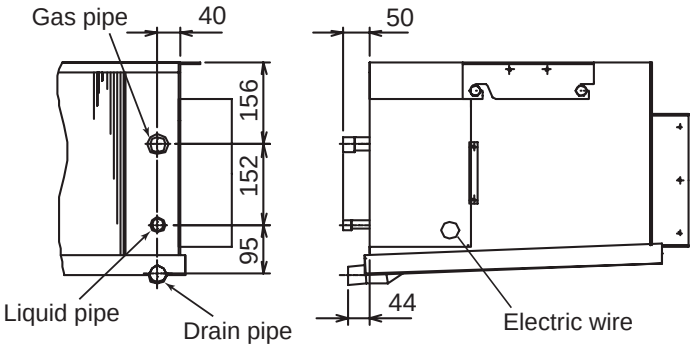

Please use the M10 hanging bolt in any case.
Hanging bolt is local supply.
Please use the method below or use the angle and the rectangular lumber, etc. and install the hanging bolt

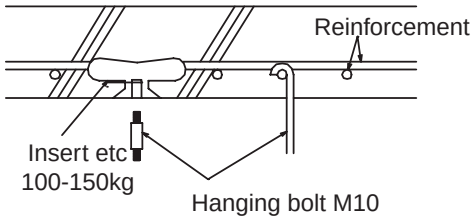

Outdoor unit

	Weight of unut(kg)
PEH-7	67
PEH-8	70
PEH-10	84
PU-7	202
PU-8	205
PU-10	230
PUH-7	211
PUH-8	214
PUH-10	240

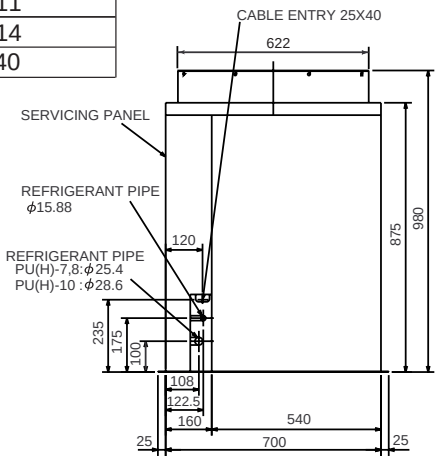

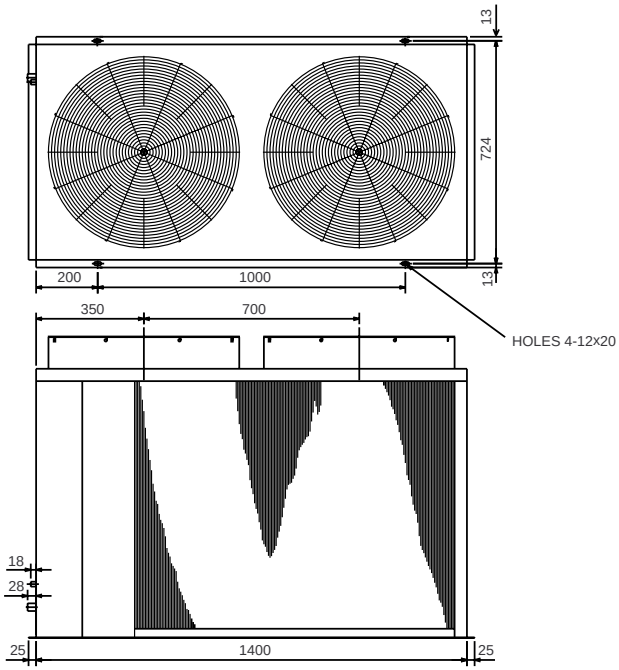

3. installation of the unit

Indoor unit

Please carry the packed until parallelly to installed place.
Please install the unit before construction of the ceiling -lined.

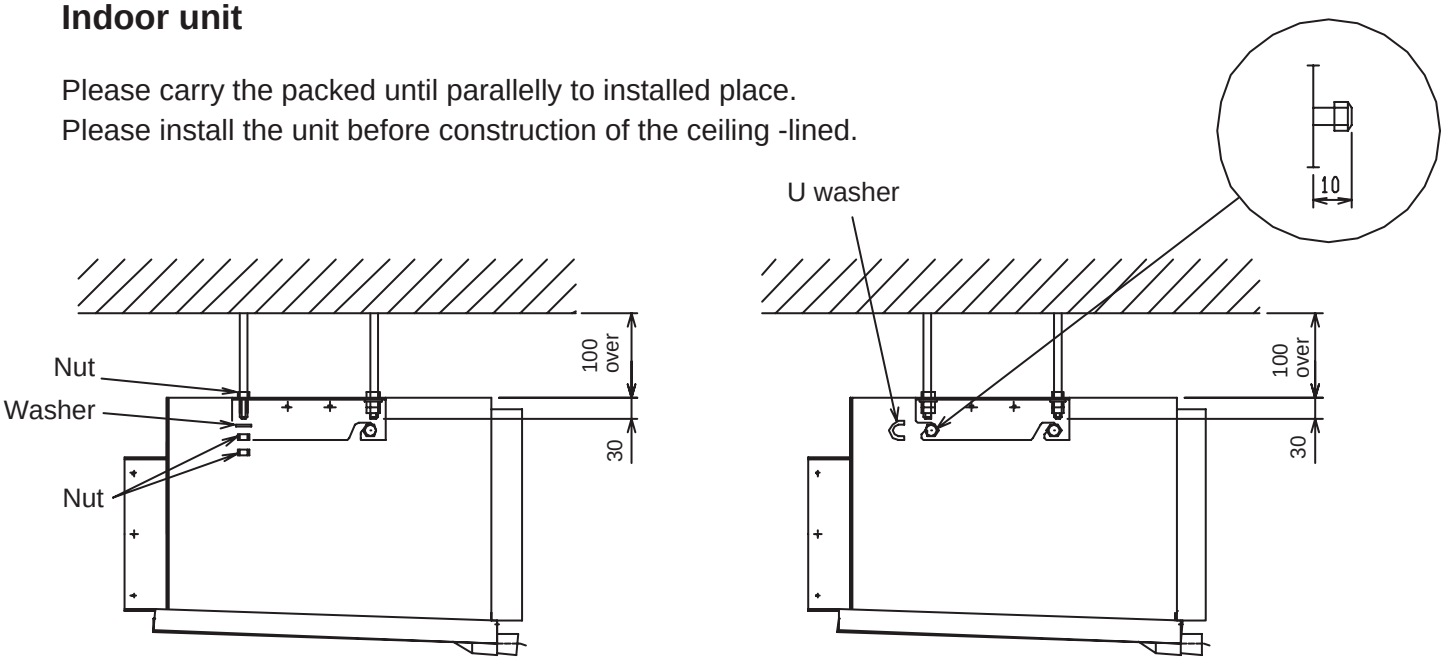

Outdoor unit

Fix unit tightly with bolts as shown below so that unit will be securely fixed in place.
Use concrete or angle foundation of unit.
At the time of bottom piping of refrigerant pipe, build a 100mm or higher foundation so that piping will go through bottom of unit.

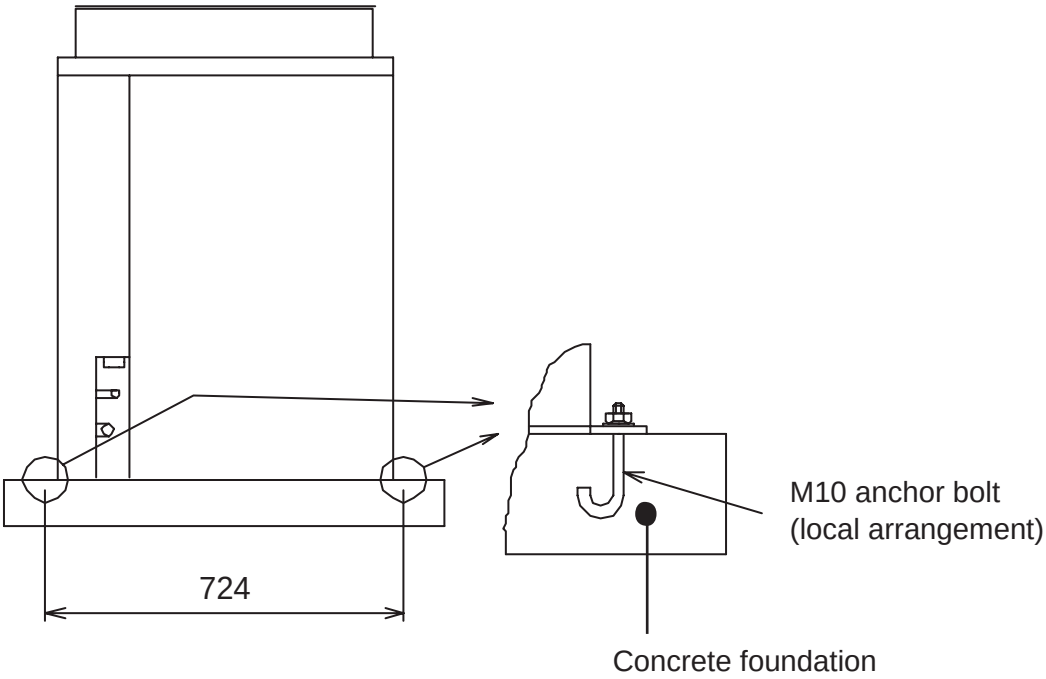

Lifting method.

When the unit is to be lifted and moved, attach ropes to the suspension plates(3 p.c.s) provided on the top of the unit.
When the unit is lifted, it 's center of gravity tends to shift the unit one side and so balance, such as that in the figure below, should be attained.
The angles at which the ropes suspend the unit should be at least 60° at the compressor end and at least 45° at the condenser end. Care should be taken to avoid contact with the main unit while carrying.

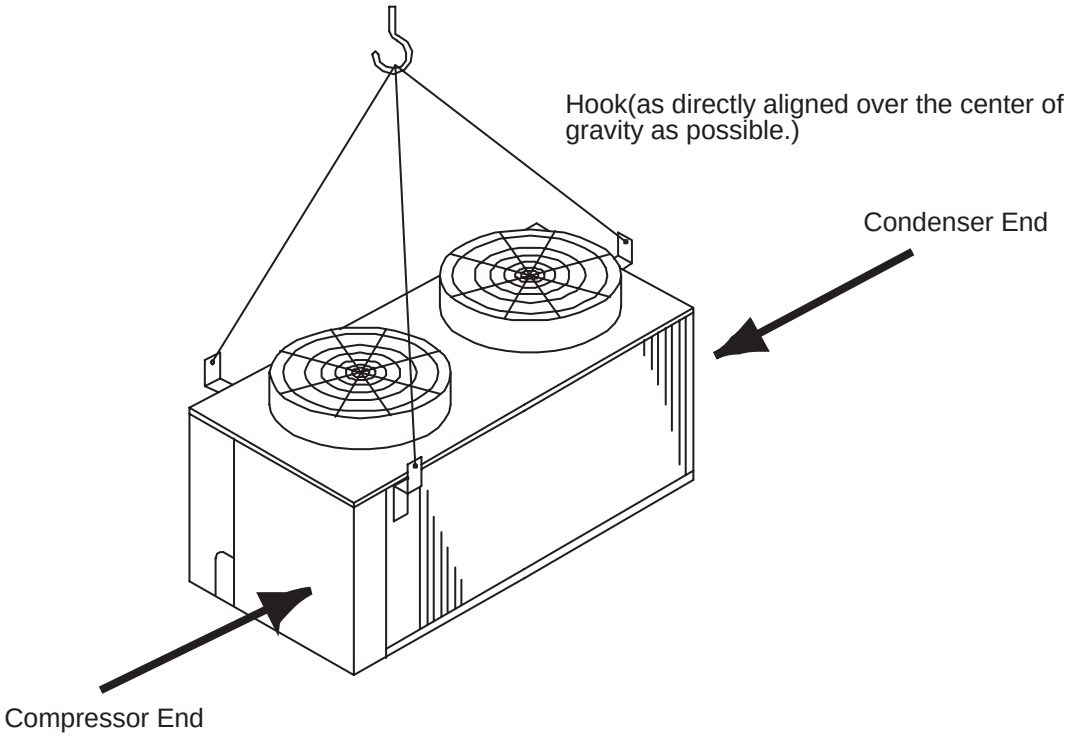

4.Duct construction.

Provide canvas flexible ducting between unit when connect to the duct-work.
The duct unit must use a nonflammable material.
Provide sufficient insulation for prevent dewdrop.

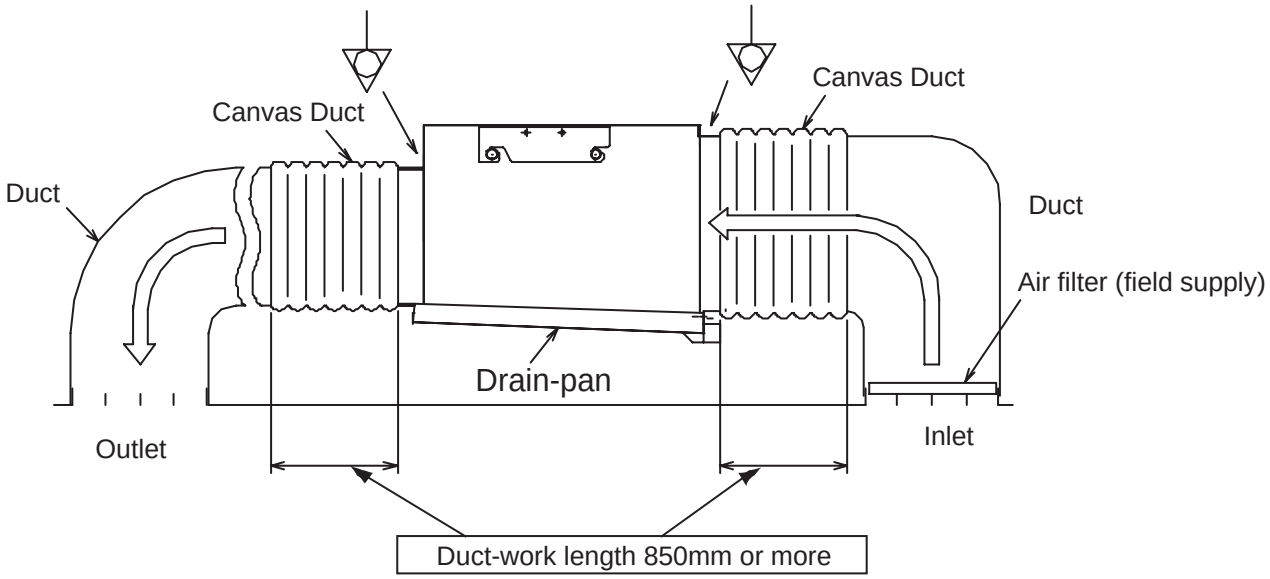

5. Refrigerant piping.

Extension piping and installation parts are field supply.
Perform the work only after carefully reading the appropriate instructions.

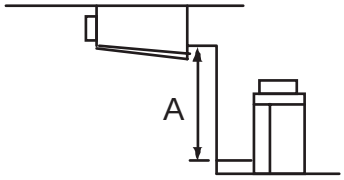

When the outdoor unit is lower.

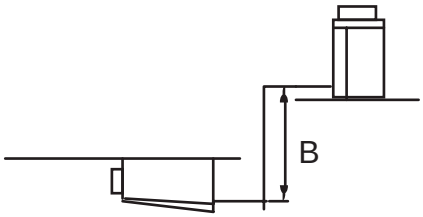

When the outdoor unit is higher.

Install the unit where the refrigerant piping is shortest, the difference between the indoor unit and outdoor unit is smallest.
As pipes purchased in the market may contain dust, below them off with dry inlet gas.
Take care not to allow dust and water content to enter the piping during pipe processing or installing.
Minimize the number of bends, and make the bending radius as long as possible.
Always observe the restriction(allowable length, height difference, pipe diameter) on the refrigerant piping.
For soldering & brazing, use high-quality materials.
Never purge air with a refrigerant. Always use a vacuum pump for purging.
Provide proper insulation to the piping . Insufficient insulation cause poor cooling/heating performance or condensation drip, leading to unexpected trouble.
Do not insulate gas or low pressure pipe and liquid or high pressure pipe together.
For the connection of the refrigerant piping, leave the valve of the outdoor unit fully closed (as set before shipment), and no operate it until the connection between the indoor/outdoor units and refrigerant piping, refrigerant leak test and evacuation work have been completed.
The maximum permissible values are shown below.

Good example

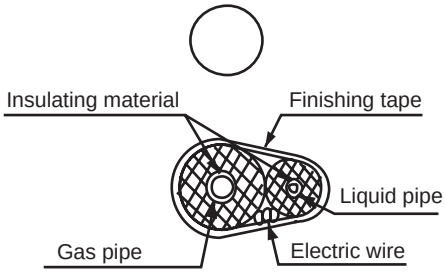

Bad example

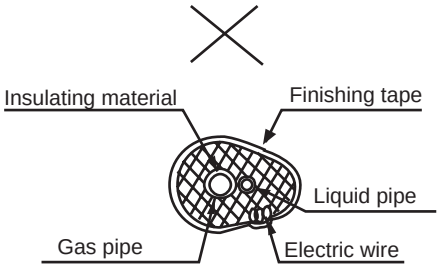

		PE(H)-7	PE(H)-8	PE(H)-10
Dimension A		20m	20m	20m
Dimension B		30m	30m	30m
Number of bend		15	15	15
Total piping length		50m	50m	50m
Piping size	Liquid pipe	15.88mm	15.88mm	15.88mm
	Gas pipe	25.4mm	25.4mm	28.6mm

kind of pipe	90angle-elbow
15.88	0.35m
25.4	0.52m
28.6	0.61m

unit m/one bend

elbow:50m meaning is actual length.
Equivalent length is 50m plus elbow.(Maximum 15pcs)

Airtight test

Airtight test should be made by pressurizing nitrogen gas to 3Mpa.
For the test method, refer to the following figure.
(Make a test with the valve closed. Be also sure to pressurize both liquid and gas pipe.)
The test result can be judged good if the pressure has not been reduced after leaving for about one day after completion of nitrogen pressurization.

a.	Nitrogen gas
b.	To indoor unit
c.	System analyzer
d.	Low knob
e.	High knob
f.	Valve
g.	Liquid gas
h.	Gas pipe
i.	Outdoor unit
j.	Service port

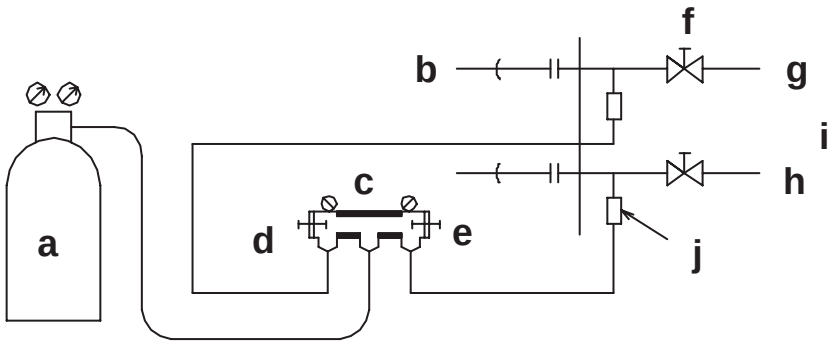

Evacuation should be made from the service port provided on the outdoor unit's valve to the vacuum pump commonly used for both liquid pipe and gas pipe.
(Make evacuation from both liquid pipe and gas pipe with valve closed.)
Remember :Never carry out air purge by refrigerant.

a.	System analyzer
b.	To indoor unit
c.	Low knob
d.	High knob
e.	Valve
f.	Liquid gas
g.	Gas pipe
h.	Outdoor unit
i.	Service port
j.	Vacuum pump

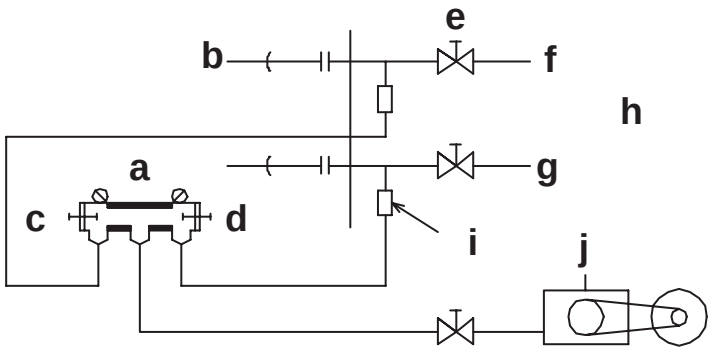

Additional refrigerant charge

The mount of refrigerant charged in this unit is a appropriate for 5-meter long refrigerant pipes. Refer to the table below and add the corresponding amount of refrigerant if the pipes are extended.

	Refrigerant piping length										
	unit	5m	10m	15m	20m	25m	30m	35m	40m	45m	50m
charge mount R-22 (kg)	PE-7	0	0.8	1.6	2.4	3.2	4.0	4.8	5.6	6.4	7.2
	PE-8	0	0.8	1.6	2.4	3.2	4.0	4.8	5.6	6.4	7.2
	PE-10	0	0.8	1.6	2.4	3.2	4.0	4.8	5.6	6.4	7.2
	PEH-7	0	0.8	1.6	2.4	3.2	4.0	4.8	5.6	6.4	7.2
	PEH-8	0	0.9	1.8	2.6	3.5	4.4	5.3	6.1	7.0	7.9
	PEH-10	0	0.9	1.7	2.6	3.4	4.3	5.1	6.0	6.8	7.7

6. Drain piping

Incline the drain piping to the outside (drain side) as shown in the figure below.
The outlet of the indoor unit drain pipe is 25mmBSP (male) thread.
After completion of piping, confirm that drainage is good and that there are no leaks.

Indoor unit drain piping

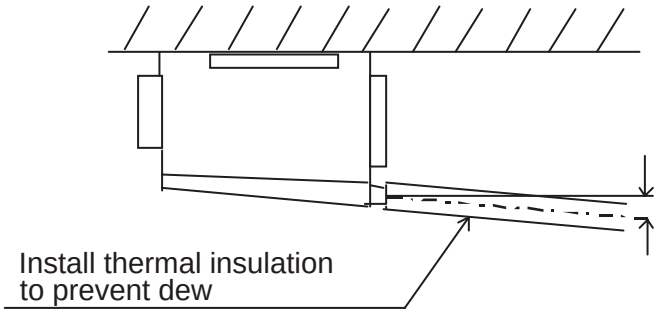

The drain piping should have a drain trap.

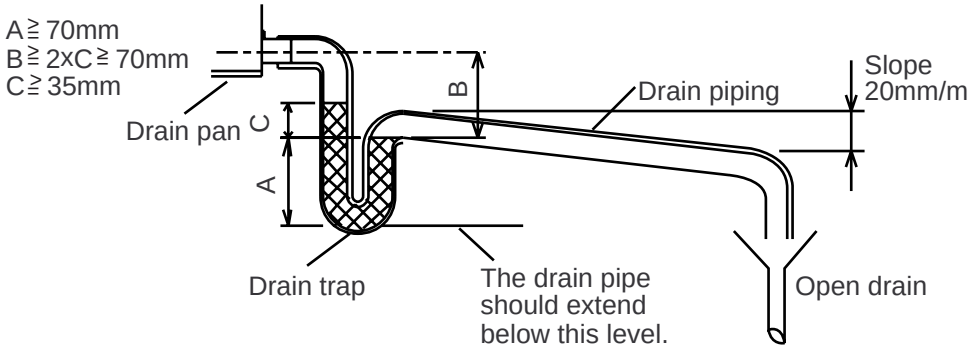

7. Electric wiring

Construct the earth connection.
All electrical work must be carried out by a suitable qualified electrical trades-person and in accordance with local supply authority requirements and associated regulators.
The outdoor unit is to be wired directly from an electrical distribution board either by a circuit breaker (preferred) or HRC fuse.

Fix power source wiring to control box by using buffer bushing for tensible force (PG connection or the like). Connect control wiring to control terminal block through the knockout hole of control box using ordinary bushing.

Arrangement such as terminal block in control box

Control module of Indoor unit

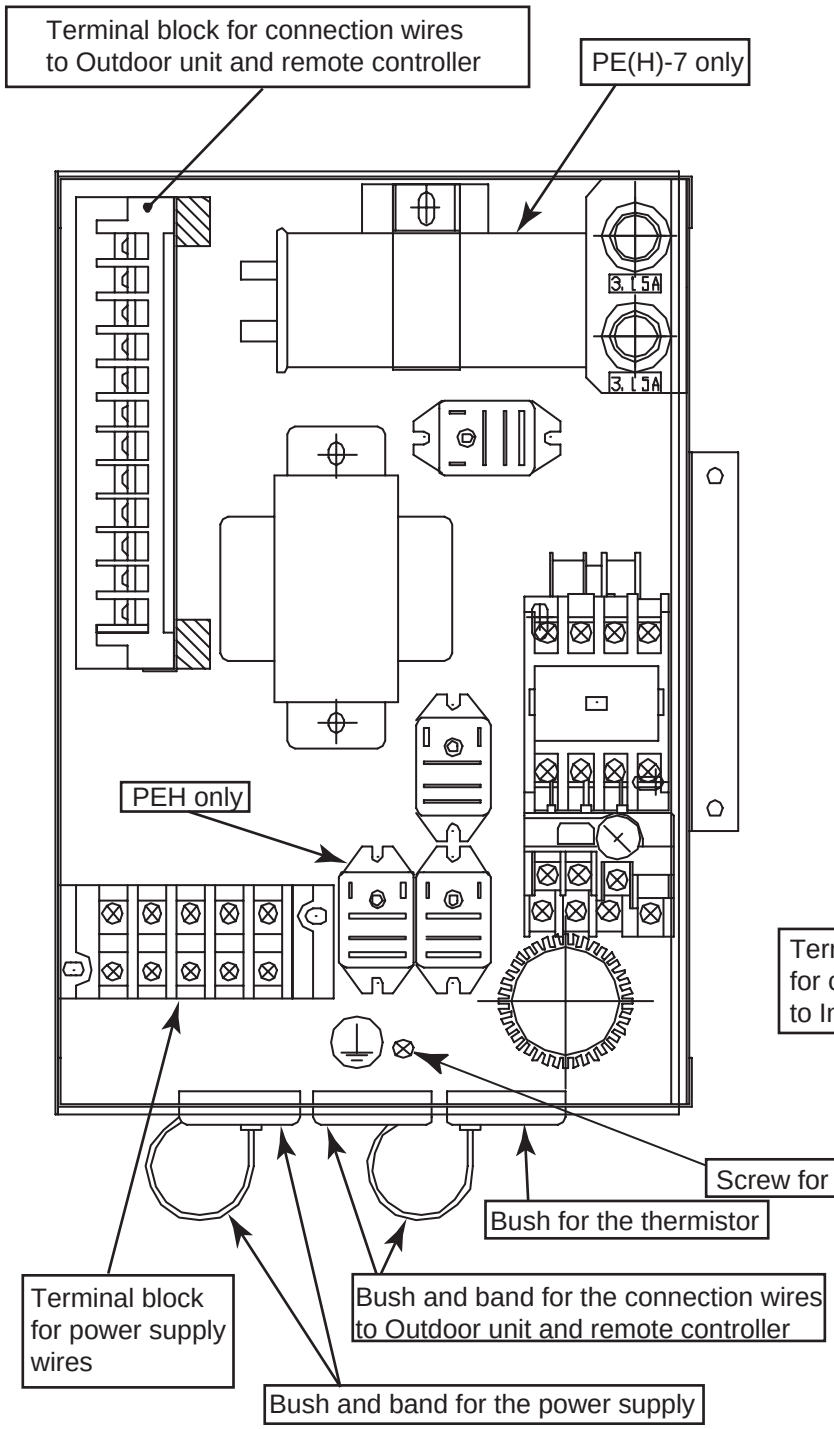

Control module of Outdoor unit

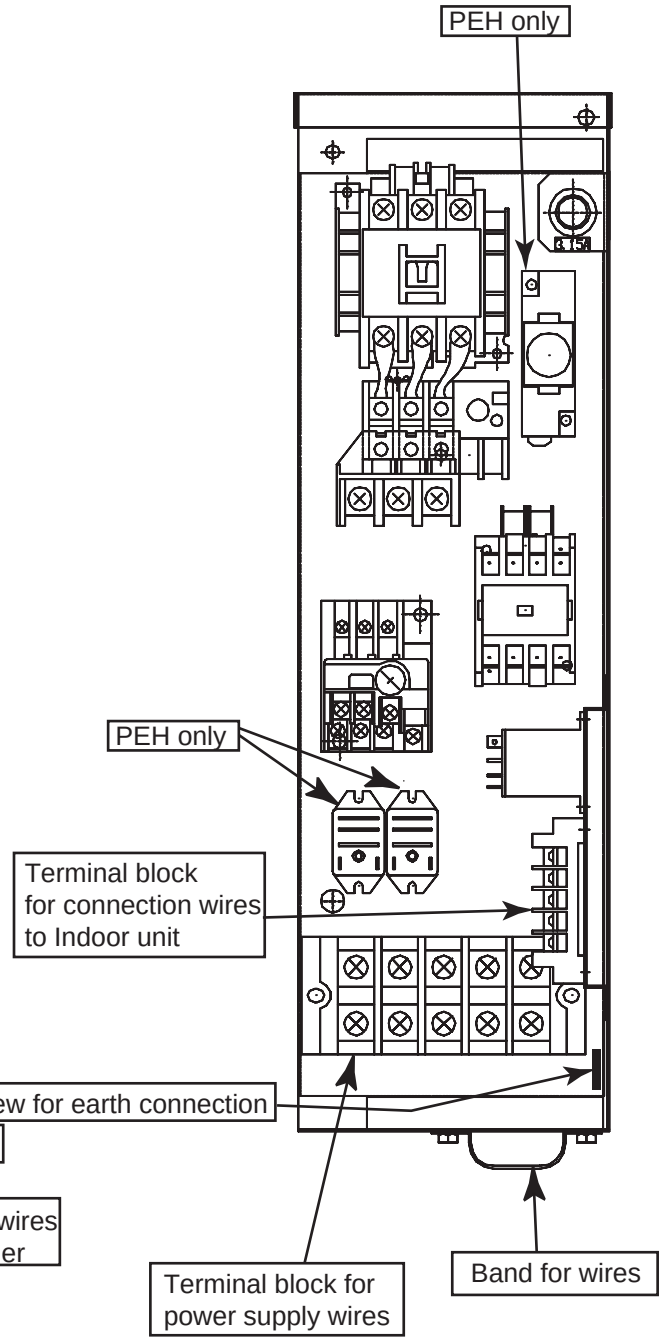

Method for connecting electric wire

Please do the wiring after consulting the electric power company of jurisdiction beforehand in the instruction.

(1) The entire wiring diagram of unit

a.	Power supply
b.	Main switch/fuse (field supply)
c.	Power supply wiring for outdoor unit
d.	Power supply wiring for indoor unit
e.	Outdoor unit
f.	Indoor unit
g.	Connection wiring for indoor/outdoor units (polarity)
h	Remote controller (field supply)
i.	Connection wiring for indoor/outdoor units (no polarity)
j	Grounding

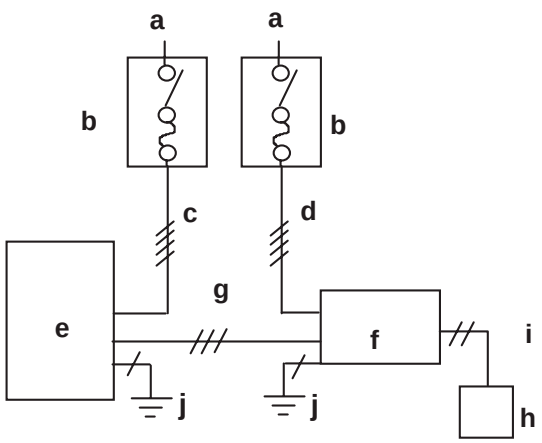

(2) Power supply construction and electric wiring connection of the indoor and outdoor unit

A.	Indoor unit
B.	Power cable wiring
C.	Control cable wiring (Fixing wire---Do not remove)
D.	Outdoor unit
E.	Breaker
F.	Fuse
G.	Power cable terminal bed
H.	Control cable terminal bed

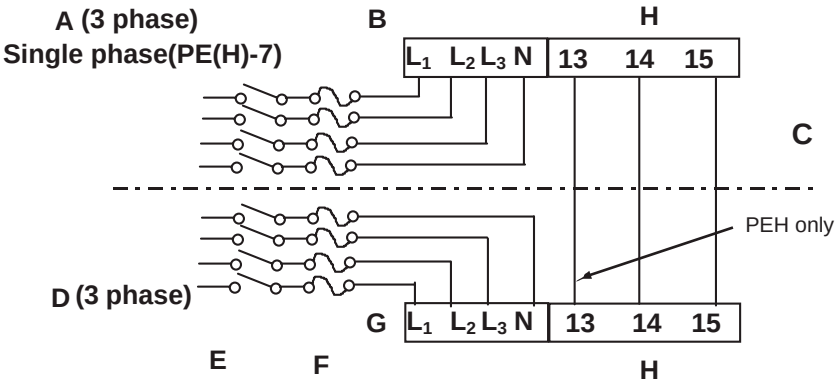

(3) Wiring example(For metal piping)

	Power cable	Breaker capacity	Over current protection switch	Earth cable	Control cable
PE(H)-7/8	1.6mm	15A	15A	3.5mm^2 over	Cable or wire of 2.0mm (24VDC)
PU(H)-7/8	8mm^2	50A	50A	5.5mm^2 over	
PE(H)-10	1.6mm	15A	15A	3.5mm^2 over	
PU(H)-10	14mm^2	60A	60A	5.5mm^2 over	

* The grounding wire must be of the same diameter as the power cable wires
Table above is an example. The selection of other capacities should be determined in accordance with the relevant standards.

Note:
All electrical wiring must be comply with local electrical authority regulations.

(4) Selecting earth leakage breaker (NV)

To select NF or NV instead of a combination of Class B fuse switch use the following.
In the case of Class B fuse rated 15A

Fuse (class B)	15A	50A	60A
Earth leakage breaker (with over-load protection)	NV-30CA	NV-50CF	NV-60CF
	15A	50A	60A
	30mA 0.1s or less	100mA 0.1s or less	100mA 0.1s or less

NV is a product of MITSUBISHI.
Table above is an example. The selection of other capacities should be determined in accordance with the relevant standards.

Note:
All electrical wiring must be comply with local electrical authority regulations.

8. Before starting the Trial run.

Check items

(1) Check to see whether there are refrigerant leakage, and slack power or transmission cable.
(2) Conform that 500V megohmmeter shows 1.0M ohm or more between power supply terminal and ground.
(3) Do not operate in the case of 1.0M ohm or less.
Note: Never carry out megger-ohm check over terminal control board. Otherwise the control board would be broken.
(4) Check to see whether both gas and liquid valves are fully opened.
Note: Be sure to tighten caps.
(5) Turn universal power supply at least 6 hours before getting test run in order to current to crank heater.
If current -carrying hours are too short, it may result in a malfunction of compressor.
(6) Confirm operation of high-pressure switch.
If the two lead wires of the outdoor unit fan motor are disconnected from the connector and cooling is performed, the high-pressure switch should operate and stop the unit after 5 to 10 minutes.
(7) Confirm that the fans of the indoor and outdoor unit rotate in the correct direction.
Change the power supply phase connections if it is rotating in the reverse direction.

Perform trial operation after completion of the above items.

INSTRUCTION FOR USE

1.Check points for operation.

Check the following points before you operate your air conditioner.

(1)Check that there is nothing blocking the flow of air from the air outlet into the air inlet.

Indoor unit

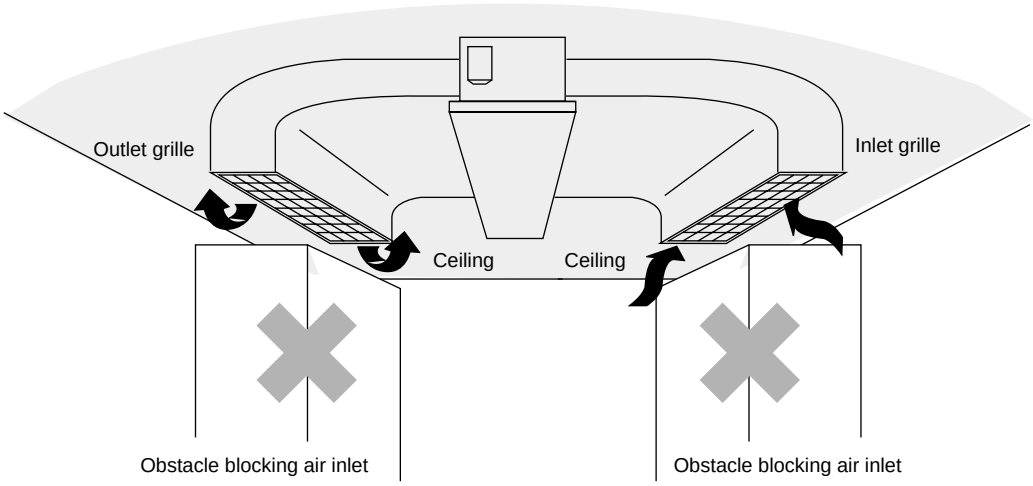

Outdoor unit

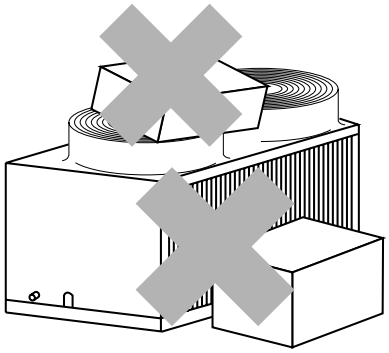

Obstacle blocking air inlet.

(2)Make sure the air conditioner is properly grounded by checking the ground terminal.

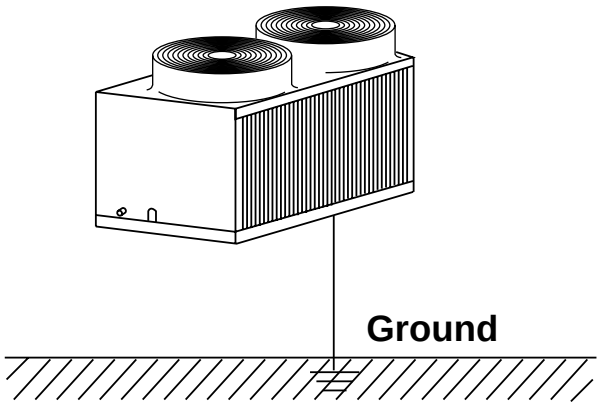

2.Caution for use.

Keep the following points in mind to safeguard against failures and breakdowns.

(1) This air conditioner does not restart within 3min. after shut down.
(These models have a crankcase heater in the compressor. If the air conditioner is shut down for a short time, please do not turn the power switch to OFF, but turn the operation switch to OFF.)

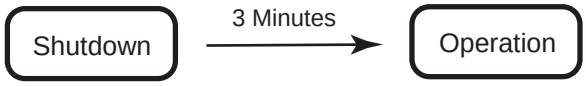

(2) If the air conditioner is shut down by a power failure, set the operation switch to OFF. When the power is restored, normal air conditioner operation can be resumed.

(3) Do not stick rods or other objects through the air outlet during operation since this may result in equipment damage or personal injury.

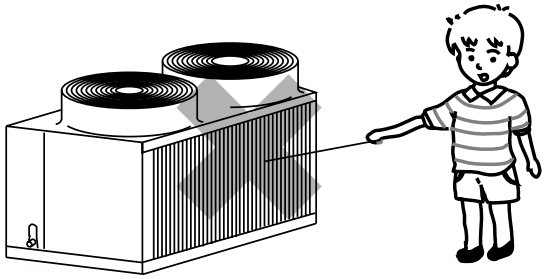

3.Maintenance.

For superior performance and lasting durability, please do not forget to conduct proper and regular maintenance.

⚠ Warning

1.Do not wash the product with water.
If washed with water, electrical shock may be caused.

2.Ahead of the maintenance.
For safety, turn the power source off before service work.

3.1 Cleaning the Air Filter (Field supply)

Clean the air filter about once a week with a neutral cleanser and leave it to dry in a shady location.
Clean more regularly if the air filter gets very dirty.
If the filter gets blocked, air will not be sucked in properly, and the cooling effect will deteriorate.
Failure to clean the air filter may result in equipment breakdown or malfunctions.

3.2 Cleaning panels

Clean dirt off front panel as follows.
Use a household neutral cleanser such as for dishes or vegetables. Moisten a soft cloth with the cleanser, then wipe lightly. Next,wipe three or four times with another soft cloth moisten with water. Finally, wipe off all the remaining cleanser with a soft cloth.
Moisten a soft cloth with the alcohol, then wipe off lightly. Isopropyl alcohol is sold at stores as reagents in small quantities.

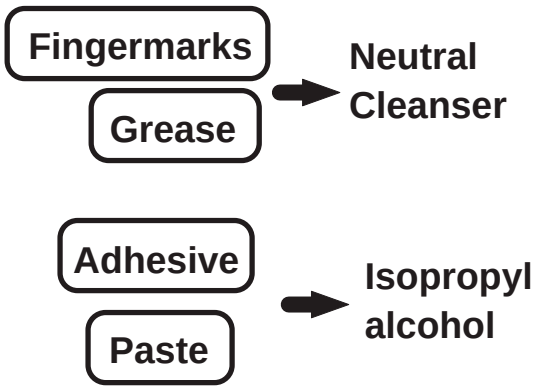

Note:
Alcohol is highly combustible. Take extreme care when handling. Also, do not use paint or adhesive thinner.

3.3 Cleaning the Outdoor Unit Heat Exchanger

If you use your air conditioner for prolonged periods, the outdoor heat exchanger will become dirty, impairing its function and reducing air conditioners performance. Consult your equipment supplier or air conditioning contractor on how to clean the heat exchanger.

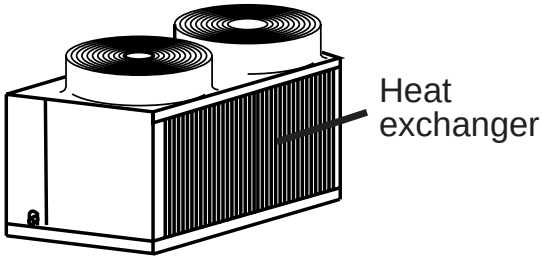

4.When beginning to use air conditioner again.

Please turn on the power supply after confirming an following check is done and abnormality is not found.

(1) It is confirmed that air inlet and outlet are not blocked.

(2) It is confirmed that the earth connection line does not come off.
The earth connection line is occasionally installed in the outdoor unit.

(3) It is confirmed that there are neither lifting , blocking , nor bending about the drain-hose.

Keep the power switch ON for more than 6hours before starting operation, to operate the crankcase heater to drive refrigerant out of oil.
Do not turn the power supply OFF during seasons of heavy use.
Doing so can result in failure .

5.When the air conditioner is not to be used for a long time.

(1) If the air conditioner is not to be used for a long time due to a seasonal change etc.,run it for 4-5hours with the air blowing until the inside is completely dry.
Failing to do so can result the growth of unhygienic, unhealthy mold in scattered areas throughout the room.

(2) When it is not to be used for an extended time, keep the < power supply >turned OFF.
If the power supply is kept on, several watts or several tens of watts will be wasted.
Also, the accumulation of dust, etc., can result in fire.

6. Troubleshooting.

Before you ask for repair service, check the following point:

State of Machine	Cause	Troubleshooting
Both fan and compressor do not run.	Power failure.	Wait for power supply recovery.
	Blown fuse of power source switch.	Contact your installing contractor.
	Excessively low power source voltage.	Ask your electric power company.
Fan runs but compressor does not run.	The set temperature of thermostat is excessively high for cooling. excessively high for heating. (PEH only)	For temperature control, decrease the set temperature at cooling. increase the set temperature at heating. (PEH only)
	The room temperature is excessively high for cooling. excessively high for heating. (PEH only)	Can not be operated as it is out of temperature control range.
Fan runs but stops immediately.	Air outlet and inlet are blocked.	Remove blocking matter.
Runs but it does not Cool or heat enough.	The filter installed in the field is clogged with dust.	Clean the filter and establish cleaning program.
	Windows and doors are being opened.	Close them.
	Air outlet and inlet are blocked.	Remove blocking matter.
	The set temperature of thermostat is excessively high for cooling. excessively high for heating. (PEH only)	For temperature control, decrease the set temperature at cooling. increase the set temperature at heating. (PEH only)
	Insufficient refrigerant charge.	Contact with your installing contractor.
Fogged white steam is discharged from the indoor unit.	When the indoor temperature and humidity are high, such a phenomenon is occasionally had at the beginning of system operation.	Please use as it is.
Water or steam is discharged from the outdoor unit.	At cooling, water which places to cooling piping and piping connection part drops . When heating, water which places to the heat exchanger drops. (PEH only)	Please use as it is.
On heating , does not heat enough. (PEH only)	Frost adheres to the outdoor coil when the temperature on the outside is low and humidity is high. This frost is melted.	Please wait about ten minutes.

Note.

1. PE-7,8,10MYC , PEH-7,8,10MYA (MECHANICAL CONTROL)

When the fault of outdoor unit is occurred, the fan(MF1) of indoor unit continues to work.

But the unit doesn't work correctly (not cooling and heating).

Then, turn off the power supply and check outdoor unit.

2. PE-7,8,10MYC-K , PEH-7,8,10MYA-K (K CONTROL)

When the fault of outdoor unit is occurred, the fan(MF1) of indoor unit continues to work only in cooling mode.

In addition, the error code (“P8”) of outdoor unit will be appeared on the remote controller.

Then, turn off the power supply and check outdoor unit.

SPECIFICATION GUIDELINES

Air to air reverse cycle split air conditioning system.

The systems shall operate at out door ambient temperatures as high as __℃.

The system shall have a total cooling capacity of __kW or greater with an indoor air quantity of __L/s at __℃ DB and __℃ WB entering indoor coil temperature with a __℃ temperature entering the outdoor coil.

The system shall have a sensible heat capacity of __kW or greater with a room DB temperature of __℃.

The total heating capacity (without electric element heaters) shall be 45kW or greater at __℃ DB, __℃ WB outdoor air conditions, with __℃ of indoor air entering indoor coil at __℃ DB.

The compressors shall be a welded high efficiency hermetic type with internal vibration isolation and be equipped with a crankcase heater.

Coils shall be of non-ferrous construction with mechanically bonded aluminum plate fins Outdoor coils shall be made, of 9.52mm OD, 0.35mm thick formless copper tubes mechanically bonded to 0.12mm thick aluminum plate fins.

Face area of the coil shall not be less than __m^2 The coil shall be factory pressure and leak tested at 3,233 kPa pressure. The indoor coil face area shall be not less than __ m^2.

Multi-wing propeller type fans shall be fitted at the condenser and shall be dynamically balanced, to ensure smooth airflow and shall discharge vertically and be direct driven by a weatherproof three phase squirrel cage __ kW induction motor.

The system shall be factory wired and all electrical wiring must comply with the Local wiring code (Controls and control wiring shall be supplied by the contractor). Compressors and fan motors shall have both internal and current sensitive overload devices.

An automatic defrost control shall be included to accomplish defrosting (only if required) every __ minutes for a period of __ minutes.

High pressure switch (pre-set) shall be factory installed.

The enclosure is weatherproof casing constructed of phosphatized, zinc coated steel with powder coating. (OUTDOOR UNIT)

The unit shall be provided with hoisting plates for rigging and hoisting the unit. The hoisting plates shall be located in the pillars. (OUTDOOR UNIT)

The unit shall have a drain connection provided (25mm BSP:male thread).

The enclosure shall have openings provided for power connections.

Access for both service and installation shall be provided to compressors, control wiring, and fans.

Side panels and top panels shall be removable for easy service access.

The unit maximum dimensions shall be : height: __mm, width: __mm and depth: __mm (INDOOR UNIT)
: height: __mm, width: __mm and depth: __mm (OUTDOOR UNIT)

Due to continuous product development, these guidelines are subject to change.

This product is designed and intended for use in the residential, commercial and light-industrial environment.

The product at hand is based on the following EU regulations:

- The Equipment Safety Low(GSG) accepted by RW-TUV.
- Low Voltage Directive 73/23/EEC
- Electromagnetic Compatibility Directive 89/336/EEC
- Machinery Directive 89/392/EEC

Please be sure to put the contact address/telephone number on the operation manual before handing it to the customer.

MITSUBISHI ELECTRIC CORPORATION

HEAD OFFICE MISTUBISHI DENNKI BLDG MARUNOUCHI TOKYO 100-0005 TELEX J24532 CABLE MELCO TOKYO

MEN10-412A

New publication Aug. 1998.
Specifications subject to change without notice.