MITSUBISHI ELECTRIC

AIR-COOLED ROOFTOP PACKAGED AIR CONDITIONERS

Series

HEAT PUMP ： PRHG-8,10,15,20

DATA BOOK

CONTENTS

Specifications subject to change without notice.

SAFETY FOR USE

Before conducting installation work, please read this “SAFETY FOR USE” carefully for correct installation.
Since the caution items shown here contain important description relative to safety, please observe them without fail.

⚠ **Warning**	Erroneous handling gives a high possibility to induce serious results such as death or heavy injury.
⚠ **Caution**	Erroneous handling may induce serious injury depending on the situation.

After reading, please keep it with you together the Instruction Manual, and read it again at the movement of the unit.

⚠ Warning

Ask your dealer or specialized subcontractor for installation.
Conducting installation work by yourself improperly may cause a fire, electric shock or water leakage.

For installation, conduct the work correctly by following the Installation Manual.
Improper installation may cause a fire, electrical shock or water leakage.

Install the unit on a spot sufficiently durable against the unit weight.
Insufficient durability can cause an injury by the falling down of unit.

All electric work must be performed by licensed technician, according to local regulations and the instructions given in this manual.
The units should be powered by dedicated power lines.
Power lines with insufficient capacity or improper electrical work may result in electric shock or fire.

Use only the specified cables for wiring. The connections must be made secured without tension the terminals.
Improper connection or fastening can cause a fire or electrical shock.

The unit should be installed according to the instructions in order to minimize the risk of damage from earthquakes, typhoons or strong winds.
Improper installation work can cause an injury by the falling down of the unit.

The outdoor unit must be installed on stable, level surface, in a place where there is no accumulation of snow , leaves or rubbish.

The outdoor unit should be installed in a location where air and noise emitted by the unit will not disturb the neighbors. The indoor unit should be securely installed.
If the unit is loosely mounted, it may fall, and cause injury.

The heating of refrigerant is noted.
When the refrigerant touches the fire etc., it was decomposed and a poisonous gas is generated.
Do not use the welding machine etc., in the room close up of the installation of the air conditioner.

Never repair the unit, remodel or transfer it to another site by yourself.
If they are performed improperly, water leakage, electric shock or fire may result. If you need to have the unit repaired or moved, consult your dealer.

Use only the specified refrigerant (R-22) to charge the refrigerant circuit.
Do not mix it with any other refrigerant and do not allow air to remain in the circuit.
Air enclosed in the circuit can cause high pressure resulting in a rupture and other hazards.

Ventilate the room if refrigerant leaks during Installation.
The refrigerant heated generates poisonous gas by decomposition which can cause poisoning.

After completing installation work, make sure that refrigerant gas has not leaked.
If refrigerant gas has leaked and exposed to fan heater, stove, oven and so on, it may generate noxious gases.
Please do the gas leakage inspection before starting.

Take a proper measure to suppress the critical concentration of refrigerant if leaked when installing the unit in a small room.
The limit density is made not to be exceeded even if the refrigerant leaks by any chance.
You are necessary to ventilation measures to prevent the accident. If the refrigerant leaks, hypoxia accident may caused.
For the countermeasure to be taken, consult your dealer.

The terminal block cover of unit must be firmly attached to prevent entry of dust and moisture.
Improper mounting of the cover cause electric shock or fire.

Use only optional parts authorised by Mitsubishi Electric.
If the accessories are installed improperly, water leakage, electric shock or fire may result.
Ask your dealer or an authorised company to install them.

⚠ Caution

Never install on the place where a combustible gas might leak.
The gas may ignite or explode when the gas leaks and collects in surround of the unit.

When the unit is installed at telecommunication centers or hospitals, take a proper provision against noise.
The erroneous operation of air conditioner may be induced by inverter equipment, independent power device, medical equipment or communication equipment.

For special use as for foods, animals/plants, precision equipment or art objects, the applicability should be confirmed beforehand.
As the use for the applications other than that designed originally may result in the deterioration of the quality. Consult your dealer in this regard.

Do not use the unit under a special atmosphere.
Installing the unit at the following places may cause a trouble, a place where is much machine oil, salt , humidity or dust, spa district, a place full of sulfur gas, volatile gas, or corrosive gas, a place near high frequency processing machine.

Thermal insulation of the drain pipes is necessary prevent dew condensation.
If the drain pipes are not properly insulated, condensation will result and drip on ceiling, floor or other possessions.

The unit should be securely installed level surface.
When the unit inclines, it causes the water leak and the breakdown.
Please confirm the horizontal with the spirit level.

Install drain piping (hose) according to this Installation Manual to ensure proper drainage.
Improper drain piping (hose) may cause water leakage and damage to furniture or other possessions.

The unit must be properly earth connected.
Do not connect the earth wire to gas pipe, city water pipe, lightning rod or telephone earth wire.
Improper earth connection may cause electrical shock.

When installing at a watery place, provide an electric leak breaker.
Failure to mount the electric leak breaker may cause electrical shock.

Use breaker or fuse with proper capacity.
Make sure that each appliance has a main power switch.
Using a wire or copper wire instead of proper capacity can cause fire or trouble.
Other appliances connected to the same line could cause an overload.

For the power lines, use standard cables of sufficient current capacity.
Otherwise, current leakage, overheating or fire may occur.

When installing the power lines, do not apply tension to the cables.
The tighten or loosen the connections may cause generate heat and cause fire.

Do not place objects under the units to avoid damage of condensation.
When the room is high humidity or when the drain pipe is clogged, water may drip from the indoor unit.

Arrange the configuration of wiring not to bring up the panel and terminal cover, and fasten the panel and terminal cover securely.
The poor mounting of the panel or terminal cover may cause the heat generation of the terminal connection, a fire or electrical shock.

Do not wash the unit with water.
If washed with water, electric shock may be caused.

Do not handle the switch with wet hands.
Otherwise electric shock can be resulted.

Be very careful about unit transportation.
The unit should not be carried by only one person if it is more than 20kg. It occasionally causes the damage of the unit and health to be impaired.
Some unit use PP bands for packing. Do not use any PP band for delivery purpose. It may cause the injury.
Do not touch the heat exchanger fins with your bear hands.
Doing so may cut your hands.
When carrying in outdoor unit, be sure to support it at four points. Carrying in and lifting with 3-point support may make outdoor unit unstable, resulting in a fall of it.
Be sure to safety dispose the packing materials.
Packing materials, such as catches and other metal or wooden parts, may cause stabs or other injuries.

Do not leave the mounting base being damaged.
The damaged base may cause the falling down of the unit which may give injury.

Turn on the main power switch more than 6 hours before starting operation.
Do not turn the main power switch OFF during seasons of heavy use, doing so can result in failure.

Do not touch the compressor or refrigerant piping without wearing glove on your hands.
Touching directly such part can cause a burn or frostbite as it becomes high or low temperature according to the refrigerant state.

Do not touch the metal edges inside the unit without wearing glove on your hands.
Touching directly it may injure your hands.

Do not remove the panel or the fan guard from the unit when it is running.
You could be injured if you touch rotating, hot or high-voltage parts.

Do not operate the air conditioner without the air filter set place.
Dust may accumulate, and cause a failure.

At emergency (if you smell something burning), stop operation and turn the power source switch off.
Continuing the operation without eliminating the emergency state may cause a machine trouble, fire, or electrical shock.

After stopping operation, be sure to wait for five minutes before turning off the main power switch.
Otherwise, water leakage or unit failure may occur.

Remote controller is not installed for the place where direct sunshine strikes.

Remote controller should be pushed with finger.
Remote controller may be broken.

FEATURES

Highly Efficient operation
The EER(Energy Efficiency Ratio) on these models is greatly improved by revised design specifications and by being manufactured stringently to Mitsubishi Electric high quality standards.

High sensible cooling capacity
The sensible cooling capacity has been significantly improved through balanced optimised heat exchanger design.

Flexible Installation (Convertible Airflow)
The customer can select whichever side flow and down flow in the PRHG series. The standard specification is side flow. Also the PRHG series can install more flexible in local work, too.

Labor Saving Installation
Because of the single unit configuration, all refrigeration work can be omitted.
The unit operation can commence immediately after connection to the power supply, drain piping, ducting and control system.

Minimum Floor Space
The PRHG series feature a compact design and has been succeeded in reducing more floor space.

Flexibility of Supply Air Delivery
All series feature belt driven Supply Air fans enabling accurate matching of actual airflow rates to the specified quantities.
Accurate commissioning is assisted by the capability to exchange pulleys and belts if necessary to achieve the desired air balance.

Comfort heating
The PRHG series are designed to provide effective heating even when the outside temperature is down to -15˚C.
<Merit up at defrost>
Cold air stop is introduced during defrost in PRHG8, 10.

Wide Electrical Control Capability
All series is flexible mechanical control configulation.
In addition Global Remote Controller is prepared on standard.
The Global Remote Controller give the programmable weekly timer, compressor anti-short cycle timer(3 min), cool/heat/fan/auto changeover etc.
This controller utlises a microprocessor and includes liquid crystal display with touch pad for adjustment for control program.
The factory standard is for provision of 24volt terminal block to enable a field wired control of contractors choice to be connected.
Please consult your local Mitsubishi Electric Sales office for application advice on these control.

Global Remote Controller

Low Ambient Cooling Kit (option)
In applications with relatively high internal loads, there may be a requirment for all series to operate on cooling at low ambient conditions.
An optional accessory is available to maintain the refrigeration circuit in balance at outdoor temperatures as low as -5˚C.
Please consult your local Mitsubishi Electric Sales office for application advice on this accessory.

TYPICAL INSTALLATION EXAMPLE

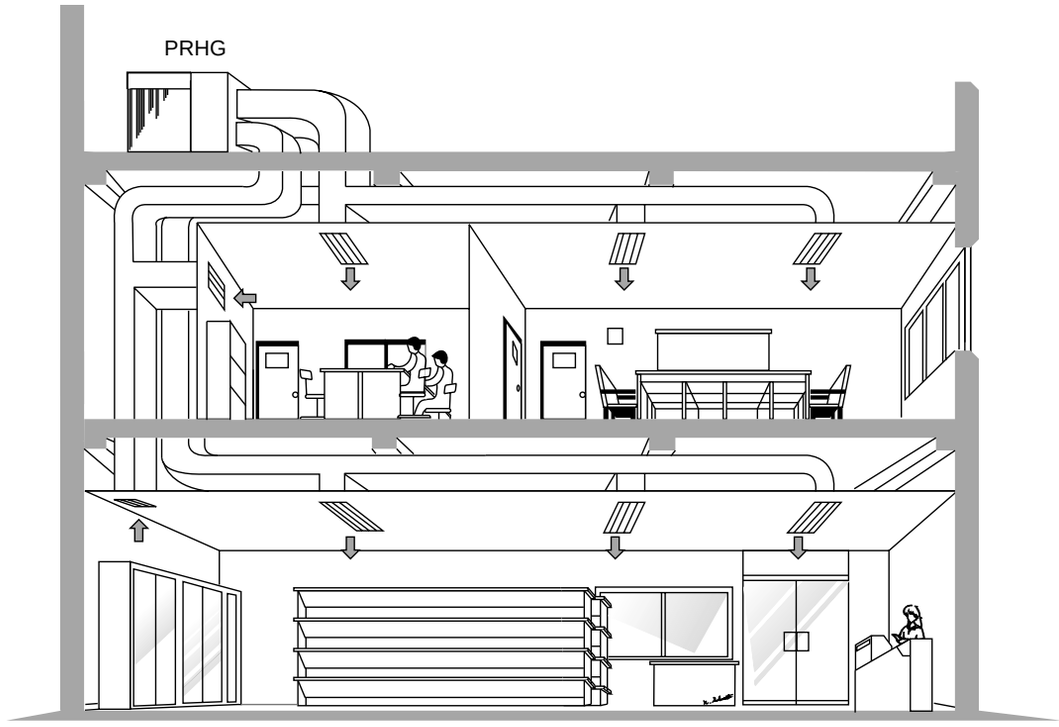

MODEL-DESIGNATION BREAKDOWN

P R H G — 1 0 M Y A — E U

Series symbol
Self-contained type
(rooftop type)

Heat pump type

Series symbol
global type

Compressor horse power
8=8HP
10=10HP
15=15HP
20=20HP

Design sequence

Series symbol
Y=3-phase
380V,400V,415V,50Hz,4 wires

Design sequence

Service reference

SPECIFICATIONS

Model name			PRHG-8MYA	PRHG-10MYA	PRHG-15MYA	PRHG-20MYA
Service reference			PRHG-8MYA-EU(S)	PRHG-10MYA-EU(S)	PRHG-15MYA-EU(S)	PRHG-20MYA-EU(S)
Power supply			3N~ 380~415V 50Hz			
Total cooling capacity (Gross)		kW	23.8	29.7	46.3	60.8
		Btu/h	81,300	101,400	158,000	207,500
		kcal/h	20,500	25,600	39,900	52,300
Sensible cooling capacity (Gross)		kW	19.0	23.8	37.0	48.6
		Btu/h	64,900	81,300	126,300	165,900
		kcal/h	16,400	20,500	31,900	41,800
Total cooling capacity (Net)		kW	23.0/22.6	28.3/27.8	44.8/44.1	58.3/57.2
		Btu/h	78,500/77,200	96,600/94,900	152,900/150,500	199,000/195,200
		kcal/h	19,800/19,500	24,400/24,000	38,600/38,000	50,200/49,200
Total heating capacity (Gross)		kW	21.8	30.1	43.3	57.6
		Btu/h	74,400	102,800	147,800	196,600
		kcal/h	18,800	25,900	37,300	49,600
Total heating capacity (Net)		kW	22.6/23.0	31.5/32.0	44.8/45.5	60.1/61.2
		Btu/h	77,200/78,600	107,500/109,100	152,900/155,100	205,100/208,700
		kcal/h	19,500/19,800	27,100/27,600	38,600/39,200	51,700/52,700
Capacity steps		%	0-100		0-50-100	
Refrigerant			R-22			
Refrigerant charge		kg	4.7	5.6	2x4.7	2x5.6
Refrigerant control			Capillary tube			
External finish			Acrylic resin coating			
Color			MUNSELL 5Y8/1			
Dimension	Height	mm	1,000		1,200	
	Width	mm	1,300		1,990	
	Depth	mm	1,530		1,800	
Net weight		kg	385	415	700	800
Compressor			Hermetic line start (reciprocating)			
No. x Motor output		kW	5.5	7.5	2x5.5	2x7.5
Indoor coil			Cross fin coil			
Indoor fan			Centrifugal (galvanized steel) - belt drive			
Indoor fan motor			Three phase cage induction motor			
No. x Motor output		kW	1.1	1.5	2.2	3.7
Indoor fan air flow		CMM	80	100	160	190
		CFM	2,826	3,532	5,651	6,710
		L/S	1,333	1,667	2,667	3,167
External static pressure		mmAq	5/10	6.2/10	10/20	
		Pa	50/100	62/100	100/200	
Outdoor coil			Cross fin coil			
Outdoor fan			Propeller - direct drive			
Outdoor fan motor			Three phase cage induction motor			
No. x Motor output		kW	0.55		2x0.55	
Condenser fan air flow		CMM	160		320	
		CFM	5,651		11,302	
		L/S	2,667		5,333	
Drain connection		mm	25.4			
Sound pressure level		dB(A)	66		70	
Protection devices			High pressure switch, fuse Over current relay (compressor, indoor fan and outdoor fan) Internal thermostat (compressor and outdoor fan motor)			

Note
1. Cooling & Heating capacity is based on the following conditions.
   Cooling : Indoor:27˚CDB , 19˚CWB ; Outdoor:35˚CDB
   Heating : Indoor:21˚CDB ; Outdoor:7˚CDB , 6˚CWB
2. Refrigerant charge volumes are factory charged.
3. Gross capacity do not include a deduction for evaporator fan motor heat.
4. The measuring point of the Sound pressure level is 1m from the unit surface.
5. The range of working voltage is with in ±10% voltage of power supply.
6. Specification subject to change without notice.

ELECTRICAL DATA

VOLT	ITEM		PRHG-8MYA		PRHG-10MYA	
			Cooling	Heating	Cooling	Heating
415V	TOTAL INPUT	kW	7.9/8.3	6.6/7.0	10.9/11.4	9.4/9.9
	TOTAL RUN CURRENT	A	13.3/14.0	11.1/11.8	17.8/18.5	15.3/16.0
	POWER FACTOR	%	82%	83%	86%	86%
	START CURRENT	A	77.8	77.8	76.3	76.3
	COMPRESSOR INPUT	kW	6.6	5.3	9.0	7.5
	RUN CURRENT	A	10.4	8.2	14.5	12.0
	O/D FAN INPUT	kW	0.5	0.5	0.5	0.5
	RUN CURRENT	A	1.5	1.5	1.3	1.3
	I/D FAN External static pressure	Pa	62/100	62/100	62/100	62/100
	INPUT	kW	0.8/1.2	0.8/1.2	1.4/1.9	1.4/1.9
	RUN CURRENT	A	1.4/2.1	1.4/2.1	2.0/2.7	2.0/2.7
400V	TOTAL INPUT	kW	7.9/8.3	6.6/7.0	10.9/11.4	9.4/9.9
	TOTAL RUN CURRENT	A	13.8/14.5	11.6/12.3	18.5/19.2	15.8/16.5
	POWER FACTOR	%	82%	83%	86%	86%
	START CURRENT	A	80.8	80.8	79.1	79.1
	COMPRESSOR INPUT	kW	6.6	5.3	9.0	7.5
	RUN CURRENT	A	10.7	8.5	15.1	12.4
	O/D FAN INPUT	kW	0.5	0.5	0.5	0.5
	RUN CURRENT	A	1.6	1.6	1.3	1.3
	I/D FAN External static pressure	Pa	50/100	50/100	62/100	62/100
	INPUT	kW	0.8/1.2	0.8/1.2	1.4/1.9	1.4/1.9
	RUN CURRENT	A	1.5/2.2	1.5/2.2	2.1/2.8	2.1/2.8
380V	TOTAL INPUT	kW	7.9/8.3	6.6/7.0	10.9/11.4	9.4/9.9
	TOTAL RUN CURRENT	A	14.5/15.3	12.1/12.9	19.4/20.2	16.6/17.4
	POWER FACTOR	%	82%	83%	86%	86%
	START CURRENT	A	85.0	85.0	83.3	83.3
	COMPRESSOR INPUT	kW	6.6	5.3	9.0	7.5
	RUN CURRENT	A	11.4	9.0	15.9	13.1
	O/D FAN INPUT	kW	0.5	0.5	0.5	0.5
	RUN CURRENT	A	1.6	1.6	1.4	1.4
	I/D FAN External static pressure	Pa	50/100	50/100	62/100	62/100
	INPUT	kW	0.8/1.2	0.8/1.2	1.4/1.9	1.4/1.9
	RUN CURRENT	A	1.5/2.3	1.5/2.3	2.1/2.9	2.1/2.9

VOLT	ITEM		PRHG-15MYA		PRHG-20MYA	
			Cooling	Heating	Cooling	Heating
415V	TOTAL INPUT	kW	15.7/16.4	14.0/14.7	21.0/22.1	18.2/19.3
	TOTAL RUN CURRENT	A	26.3/27.5	23.5/24.7	34.2/35.7	29.7/31.2
	POWER FACTOR	%	83%	83%	86%	86%
	START CURRENT	A	104.5	101.7	110.6	106.1
	COMPRESSOR INPUT	kW	13.2	11.5	17.5	14.7
	RUN CURRENT	A	20.9	18.1	28.2	23.7
	O/D FAN INPUT	kW	1.0	1.0	1.0	1.0
	RUN CURRENT	A	2.8	2.8	2.6	2.6
	I/D FAN External static pressure	Pa	100/200	100/200	100/200	100/200
	INPUT	kW	1.5/2.2	1.5/2.2	2.5/3.6	2.5/3.6
	RUN CURRENT	A	2.6/3.8	2.6/3.8	3.4/4.9	3.4/4.9
400V	TOTAL INPUT	kW	15.7/16.4	14.0/14.7	21.0/22.1	18.2/19.3
	TOTAL RUN CURRENT	A	27.3/28.5	24.4/25.6	35.4/37.0	30.8/32.4
	POWER FACTOR	%	83%	83%	86%	86%
	START CURRENT	A	108.4	105.5	114.7	110.1
	COMPRESSOR INPUT	kW	13.2	11.5	17.5	14.7
	RUN CURRENT	A	21.7	18.8	29.2	24.6
	O/D FAN INPUT	kW	1.0	1.0	1.0	1.0
	RUN CURRENT	A	2.9	2.9	2.7	2.7
	I/D FAN External static pressure	Pa	100/200	100/200	100/200	100/200
	INPUT	kW	1.5/2.2	1.5/2.2	2.5/3.6	2.5/3.6
	RUN CURRENT	A	2.7/3.9	2.7/3.9	3.5/5.1	3.5/5.1
380V	TOTAL INPUT	kW	15.7/16.4	14.0/14.7	21.0/22.1	18.2/19.3
	TOTAL RUN CURRENT	A	28.7/30.0	25.7/27.0	37.4/39.0	32.5/34.1
	POWER FACTOR	%	83%	83%	86%	86%
	START CURRENT	A	114.2	111.1	120.7	115.8
	COMPRESSOR INPUT	kW	13.2	11.5	17.5	14.7
	RUN CURRENT	A	22.7	19.7	30.8	25.9
	O/D FAN INPUT	kW	1.0	1.0	1.0	1.0
	RUN CURRENT	A	3.1	3.1	2.8	2.8
	I/D FAN External static pressure	Pa	100/200	100/200	100/200	100/200
	INPUT	kW	1.5/2.2	1.5/2.2	2.5/3.6	2.5/3.6
	RUN CURRENT	A	2.9/4.2	2.9/4.2	3.8/5.4	3.8/5.4

SELECTION PROCEDURE

1. Model Selection (With actual examples)

First step, to select the approximate model:

Based on the cooling load and the cooling capacity listed in the capacity table, select the applicable model.

Second step, to select the model:

To select the model, the following conditions must be known:

(1) Total cooling load or sensible cooling load

(2) Indoor conditioned temperature (WB*1, DB)

(3) Designed outdoor temperature (DB)*2

(4) Designed air flow

(5) Designed external static pressure (= Wind pressure loss of air duct)*3

Notes:

*1. The correct WB is required since it has a serious effect on the capacity.

*2. The cooling capacity decreases as the outdoor temperature increases. Therefore, the estimated highest temperature during an air conditioning time frame is the “designed outdoor temperature”. However, it is recommended that the abnormal outdoor temperature which may occur once or twice a year be excluded from the calculation to avoid selection of an excessively large capacity model.

*3. The wind pressure loss of an air duct should be calculated correctly. If a value having an excessive allowance is used, an excessively large model will be selected. Moreover, an excessively high air flow will be induced during actual operation causing the generation of high operating sounds and carry-over of condensed water.

(Step-1) Confirmation of operation range

Confirm that the conditions given above for the model to be selected are within the operation range listed on Page 18.

(Step-2) Calculation of actual air flow, external static pressure, and fan motor input

Based on the designed air flow and external static pressure, obtain the actual air flow and fan motor power from the fan performance table for the model input selected. For an explanation of how to use the fan performance table, see the following examples.

Example: PRHG-10, 50Hz

Example 1. (To operate with values near to the designed air flow and external static pressure.)

Condition : Designed air flow 100CMM
Designed external static pressure 60Pa

Calculation : The designed point is A. Therefore, duct resistance line passing A is dotted line. Therefore, actual point is B for fan speed 1088rpm.
(Select a pulley near A point to fan speed.)
Actual air flow = 110CMM

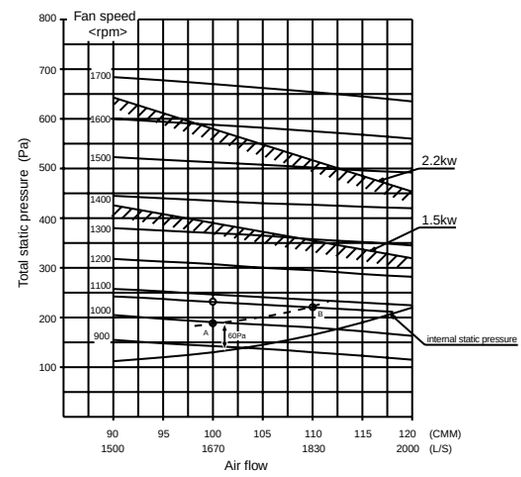

(Step-3) Calculation of net capacity

Based on the indoor conditioned temperature (WB,DB), designed outdoor temperature (DB), and the actual air flow obtained in Step-2, obtain the gross capacity from the gross capacity tables (pages 9~16). Then, calculate the net capacity from the formula below by using the fan motor input obtained in Step-2.

Net capacity (kW) = Gross capacity (kW) - Fan motor input (kW)

Example: PRHG-10, 50Hz cooling

Condition:

Indoor conditioned temp. : 26˚CDB, 19˚CWB

Designed outdoor temp. : 40˚CDB

Actual air flow : 110CMM

Indoor fan motor input : 1.9kW (See P.6, 17)

Outdoor fan motor input : 0.5kW (See P.6)

Calculation :

The sections of the gross capacity table applicable for the above conditions are shown right.

INDOOR	INDOOR	OUTDOOR DB˚C					
			40.0				
DB˚C	WB˚C		Q kW	SHC kW	SHF	W kW	
			⋮	⋮	⋮	⋮	
26	19.0	- - - - - - - - - - - - - -	28.3	22.6	0.77	9.6	
	20.0		29.2	20.4	⋮	9.8	

Factor for Various Air Flow

Air Volume	CMM	90	100	110	120
	l/s	1500	1670	1830	2000
Cooling capacity		0.987	1.000	1.012	1.022
Compressor input		0.996	1.000	1.003	1.007

At 26˚CDB, 19˚CWB of Indoor,

Q = 28.3, SHC = 22.6, W = 9.6

Therefore, when Air flow is 110 (CMM)

Q = 28.3 × 1.012 ≒ 28.6 (kW)

SHC = 22.6 × 1.012 ≒ 22.9 (kW)

W = 9.6 × 1.003 ≒ 9.63 (kW)

Note * : crrection factors of air flow

Therfore, the net capacity is,

Net total cooling capacity = 28.6 (kw) - 1.9 (kW)
= 26.7 (kW)

Net sensible cooling capacity = 22.9 (kW) - 1.9 (kW)
= 21.0 (kW)

2. Efficiency Calculation

• Refrigerant cycle energy efficienty

(1) $COP = \frac{\text{Gross total cooling capacity (kW)}}{\text{Compressor input (kW)}}$

(2) $EER = \frac{\text{Gross total cooling capacity (kW)}}{\text{Total input (kW)}}$

• System energy efficienty

(1) $COP = \frac{\text{Net cooling capacity (kW)}}{\text{Compressor input (kW)}}$

(2) $EER = \frac{\text{Net cooling capacity (kW)}}{\text{Total input (kW)}}$

1kW = 3412Btu/h

Notes:

1. COP : Coefficient of performance
2. EER : Energy efficiency ratio
3. Temperature condition of COP, EER (ARI Standard Ratings)
   Indoor entering air temp. : 80˚FDB (=27˚CDB), 66˚FWB(=19˚CWB)
   Outdoor entering air temp. : 95˚FDB (=35˚CDB)
4. Total input = Compressor input + Indoor fan motor input (page 17) + Outdoor fan motor input (page 6).

Cooling Capacity (Standard Air Flow)

PRHG-8MYA

		Outdoor DB°C																							
		20.0				25.0				30.0				35.0				40.0				46.0			
Indoor	Indoor	Q	SHC	SHF	W	Q	SHC	SHF	W	Q	SHC	SHF	W	Q	SHC	SHF	W	Q	SHC	SHF	W	Q	SHC	SHF	W
DB°C	WB°C	kW	kW		kW	kW	kW		kW	kW	kW		kW	kW	kW		kW	kW	kW		kW	kW	kW		kW
20	15	22.8	16.2	0.71	5.2	22.3	15.8	0.71	5.5	21.7	15.6	0.72	5.8	21.0	15.3	0.73	6.1	20.3	15.0	0.74	6.5	19.4	14.7	0.76	7.0
	16	23.5	14.8	0.63	5.2	22.9	14.4	0.63	5.5	22.3	14.3	0.64	5.9	21.6	14.0	0.65	6.2	20.9	13.8	0.66	6.6	20.1	13.5	0.67	7.1
	17	24.2	13.3	0.55	5.3	23.6	13.0	0.55	5.6	23.0	12.7	0.55	6.0	22.3	12.5	0.56	6.4	21.6	12.1	0.56	6.8	20.7	11.8	0.57	7.3
22	15	22.8	19.2	0.84	5.2	22.3	19.0	0.85	5.5	21.7	18.7	0.86	5.8	21.0	18.3	0.87	6.1	20.3	17.9	0.88	6.5	19.4	17.5	0.90	7.0
	16	23.5	17.6	0.75	5.2	22.9	17.4	0.76	5.5	22.3	17.2	0.77	5.9	21.6	16.8	0.78	6.2	20.9	16.5	0.79	6.6	20.1	16.3	0.81	7.1
	17	24.2	16.2	0.67	5.3	23.6	15.8	0.67	5.6	23.0	15.6	0.68	6.0	22.3	15.4	0.69	6.4	21.6	15.1	0.70	6.8	20.7	14.7	0.71	7.3
	18	25.0	14.8	0.59	5.3	24.4	14.4	0.59	5.7	23.7	14.2	0.60	6.1	23.0	14.0	0.61	6.5	22.3	13.8	0.62	6.9	21.3	13.4	0.63	7.4
	19	25.7	13.4	0.52	5.4	25.2	13.1	0.52	5.8	24.5	13.0	0.53	6.2	23.8	12.6	0.53	6.6	23.0	12.4	0.54	7.0	22.0	11.9	0.54	7.5
24	16	23.5	20.4	0.87	5.2	22.9	20.2	0.88	5.5	22.3	19.8	0.89	5.9	21.6	19.7	0.91	6.2	20.9	19.4	0.93	6.6	20.1	19.1	0.95	7.1
	17	24.2	18.9	0.78	5.3	23.6	18.6	0.79	5.6	23.0	18.6	0.81	6.0	22.3	18.3	0.82	6.4	21.6	18.1	0.84	6.8	20.7	17.6	0.85	7.3
	18	25.0	17.5	0.70	5.3	24.4	17.3	0.71	5.7	23.7	17.1	0.72	6.1	23.0	16.8	0.73	6.5	22.3	16.7	0.75	6.9	21.3	16.2	0.76	7.4
	19	25.7	15.9	0.62	5.4	25.2	15.6	0.62	5.8	24.5	15.4	0.63	6.2	23.8	15.2	0.64	6.6	23.0	15.0	0.65	7.0	22.0	14.5	0.66	7.5
	20	26.5	14.6	0.55	5.5	25.9	14.2	0.55	5.9	25.2	14.1	0.56	6.3	24.5	13.7	0.56	6.7	23.7	13.5	0.57	7.2	22.7	13.2	0.58	7.7
	21	27.3	13.1	0.48	5.6	26.7	12.8	0.48	6.0	25.9	12.7	0.49	6.4	25.2	12.3	0.49	6.9	24.4	12.2	0.50	7.3	23.4	11.7	0.50	7.9
26	18	25.0	20.5	0.82	5.3	24.4	20.3	0.83	5.7	23.7	19.9	0.84	6.1	23.0	19.6	0.85	6.5	22.3	19.2	0.86	6.9	21.3	18.7	0.88	7.4
	19	25.7	18.8	0.73	5.4	25.2	18.6	0.74	5.8	24.5	18.4	0.75	6.2	23.8	18.1	0.76	6.6	23.0	17.7	0.77	7.0	22.0	17.4	0.79	7.5
	20	26.5	17.2	0.65	5.5	25.9	17.1	0.66	5.9	25.2	16.9	0.67	6.3	24.5	16.7	0.68	6.7	23.7	16.4	0.69	7.2	22.7	15.9	0.70	7.7
	21	27.3	15.8	0.58	5.6	26.7	15.8	0.59	6.0	25.9	15.5	0.60	6.4	25.2	15.4	0.61	6.9	24.4	15.1	0.62	7.3	23.4	14.5	0.62	7.9
	22	28.1	14.3	0.51	5.7	27.5	14.3	0.52	6.1	26.7	14.2	0.53	6.6	26.0	13.8	0.53	7.0	25.2	13.6	0.54	7.5	24.1	13.0	0.54	8.0
	23	29.0	13.1	0.45	5.8	28.4	12.8	0.45	6.2	27.6	12.7	0.46	6.7	26.8	12.3	0.46	7.1	26.0	12.2	0.47	7.6	24.9	11.7	0.47	8.2
28	19	25.7	21.6	0.84	5.4	25.2	21.4	0.85	5.8	24.5	21.1	0.86	6.2	23.8	20.7	0.87	6.6	23.0	20.5	0.89	7.0	22.0	20.0	0.91	7.5
	20	26.5	20.1	0.76	5.5	25.9	19.9	0.77	5.9	25.2	19.7	0.78	6.3	24.5	19.4	0.79	6.7	23.7	19.0	0.80	7.2	22.7	18.6	0.82	7.7
	21	27.3	18.6	0.68	5.6	26.7	18.4	0.69	6.0	25.9	18.1	0.70	6.4	25.2	17.9	0.71	6.9	24.4	17.6	0.72	7.3	23.4	17.3	0.74	7.9
	22	28.1	17.1	0.61	5.7	27.5	16.8	0.61	6.1	26.7	16.6	0.62	6.6	26.0	16.4	0.63	7.0	25.2	16.1	0.64	7.5	24.1	15.7	0.65	8.0
	23	29.0	15.7	0.54	5.8	28.4	15.3	0.54	6.2	27.6	15.2	0.55	6.7	26.8	15.0	0.56	7.1	26.0	14.6	0.56	7.6	24.9	14.2	0.57	8.2
	24	30.0	14.4	0.48	5.9	29.3	14.1	0.48	6.4	28.5	14.0	0.49	6.8	27.7	13.6	0.49	7.3	26.8	13.1	0.49	7.8	25.6	12.8	0.50	8.3
30	20	26.5	22.8	0.86	5.5	25.9	22.5	0.87	5.9	25.2	22.2	0.88	6.3	24.5	22.1	0.90	6.7	23.7	21.8	0.92	7.2	22.7	21.3	0.94	7.7
	21	27.3	21.6	0.79	5.6	26.7	21.4	0.80	6.0	25.9	21.0	0.81	6.4	25.2	20.7	0.82	6.9	24.4	20.5	0.84	7.3	23.4	20.1	0.86	7.9
	22	28.1	20.0	0.71	5.7	27.5	19.8	0.72	6.1	26.7	19.5	0.73	6.6	26.0	19.2	0.74	7.0	25.2	18.9	0.75	7.5	24.1	18.6	0.77	8.0
	23	29.0	18.6	0.64	5.8	28.4	18.2	0.64	6.2	27.6	17.9	0.65	6.7	26.8	17.7	0.66	7.1	26.0	17.4	0.67	7.6	24.9	17.2	0.69	8.2
	24	30.0	17.1	0.57	5.9	29.3	16.7	0.57	6.4	28.5	16.5	0.58	6.8	27.7	16.3	0.59	7.3	26.8	16.1	0.60	7.8	25.6	15.6	0.61	8.3

※Q; Cooling Capacity, SHC; Sensible Heat Capacity, W; Compressor Input

Total input = Compressor input + indoor fan motor input + outdoor fan motor input

Factor for Various Air Flow

Air Volume	CMM	80	85	90	95
	l/s	1330	1420	1500	1580
Cooling capacity		1.000	1.006	1.012	1.017
Compressor input		1.000	1.001	1.001	1.003

Cooling Capacity (Standard Air Flow)

PRHG-8MYA (Use for Low ambient cooling parts)

		Outdoor DB°C																			
		–5.0				0.0				5.0				10.0				15.0			
Indoor	Indoor	Q	SHC	SHF	W	Q	SHC	SHF	W	Q	SHC	SHF	W	Q	SHC	SHF	W	Q	SHC	SHF	W
DB°C	WB°C	kW	kW		kW	kW	kW		kW	kW	kW		kW	kW	kW		kW	kW	kW		kW
20	15	25.3	17.7	0.70	4.4	24.9	17.4	0.70	4.4	24.5	17.2	0.70	4.5	24.1	17.1	0.71	4.7	23.7	16.8	0.71	4.9
	16	26.2	16.2	0.62	4.4	25.7	15.9	0.62	4.4	25.3	15.7	0.62	4.5	24.9	15.7	0.63	4.7	24.4	15.4	0.63	4.9
	17	27.0	14.6	0.54	4.5	26.5	14.3	0.54	4.5	26.1	14.1	0.54	4.6	25.7	14.1	0.55	4.8	25.2	13.8	0.55	5.0
22	15	25.3	20.5	0.81	4.4	24.9	20.4	0.82	4.4	24.5	20.1	0.82	4.5	24.1	20.0	0.83	4.7	23.7	19.9	0.84	4.9
	16	26.2	19.1	0.73	4.4	25.7	19.0	0.74	4.4	25.3	18.7	0.74	4.5	24.9	18.7	0.75	4.7	24.4	18.3	0.75	4.9
	17	27.0	17.5	0.65	4.5	26.5	17.5	0.66	4.5	26.1	17.2	0.66	4.6	25.7	17.2	0.67	4.8	25.2	16.9	0.67	5.0
	18	27.9	16.2	0.58	4.5	27.4	15.9	0.58	4.5	27.0	15.7	0.58	4.6	26.5	15.7	0.59	4.8	26.0	15.4	0.59	5.0
	19	28.8	14.7	0.51	4.6	28.2	14.4	0.51	4.6	27.8	14.2	0.51	4.7	27.3	13.9	0.51	4.9	26.8	13.9	0.52	5.1
24	16	26.2	22.2	0.85	4.4	25.7	22.1	0.86	4.4	25.3	21.8	0.86	4.5	24.9	21.7	0.87	4.7	24.4	21.2	0.87	4.9
	17	27.0	20.8	0.77	4.5	26.5	20.4	0.77	4.5	26.1	20.1	0.77	4.6	25.7	20.0	0.78	4.8	25.2	19.6	0.78	5.0
	18	27.9	19.3	0.69	4.5	27.4	18.9	0.69	4.5	27.0	18.6	0.69	4.6	26.5	18.6	0.70	4.8	26.0	18.2	0.70	5.0
	19	28.8	17.5	0.61	4.6	28.2	17.2	0.61	4.6	27.8	17.0	0.61	4.7	27.3	16.9	0.62	4.9	26.8	16.6	0.62	5.1
	20	29.7	16.0	0.54	4.6	29.2	15.8	0.54	4.6	28.7	15.5	0.54	4.7	28.2	15.2	0.54	4.9	27.6	15.2	0.55	5.2
	21	30.7	14.4	0.47	4.7	30.1	14.1	0.47	4.7	29.6	13.9	0.47	4.8	29.1	13.7	0.47	5.0	28.5	13.7	0.48	5.3
26	18	27.9	22.3	0.80	4.5	27.4	21.9	0.80	4.5	27.0	21.9	0.81	4.6	26.5	21.5	0.81	4.8	26.0	21.3	0.82	5.0
	19	28.8	20.4	0.71	4.6	28.2	20.1	0.71	4.6	27.8	20.0	0.72	4.7	27.3	19.7	0.72	4.9	26.8	19.5	0.73	5.1
	20	29.7	19.0	0.64	4.6	29.2	18.7	0.64	4.6	28.7	18.4	0.64	4.7	28.2	18.3	0.65	4.9	27.6	18.0	0.65	5.2
	21	30.7	17.5	0.57	4.7	30.1	17.2	0.57	4.7	29.6	16.9	0.57	4.8	29.1	16.9	0.58	5.0	28.5	16.5	0.58	5.3
	22	31.6	15.8	0.50	4.8	31.0	15.5	0.50	4.8	30.5	15.3	0.50	4.9	30.0	15.3	0.51	5.1	29.4	15.0	0.51	5.4
	23	32.7	14.4	0.44	4.9	32.1	14.1	0.44	4.9	31.6	13.9	0.44	5.0	31.0	13.6	0.44	5.2	30.3	13.7	0.45	5.5
28	19	28.8	23.3	0.81	4.6	28.2	22.9	0.81	4.6	27.8	22.8	0.82	4.7	27.3	22.4	0.82	4.9	26.8	22.2	0.83	5.1
	20	29.7	21.7	0.73	4.6	29.2	21.3	0.73	4.6	28.7	21.3	0.74	4.7	28.2	20.9	0.74	4.9	27.6	20.7	0.75	5.2
	21	30.7	20.2	0.66	4.7	30.1	19.9	0.66	4.7	29.6	19.9	0.67	4.8	29.1	19.5	0.67	5.0	28.5	19.4	0.68	5.3
	22	31.6	18.7	0.59	4.8	31.0	18.3	0.59	4.8	30.5	18.0	0.59	4.9	30.0	18.0	0.60	5.1	29.4	17.6	0.60	5.4
	23	32.7	17.3	0.53	4.9	32.1	17.0	0.53	4.9	31.6	16.7	0.53	5.0	31.0	16.4	0.53	5.2	30.3	16.4	0.54	5.5
	24	33.9	15.9	0.47	5.0	33.2	15.6	0.47	5.0	32.7	15.4	0.47	5.1	32.1	15.1	0.47	5.3	31.4	15.1	0.48	5.6
30	20	29.7	24.7	0.83	4.6	29.2	24.2	0.83	4.6	28.7	24.1	0.84	4.7	28.2	23.7	0.84	4.9	27.6	23.5	0.85	5.2
	21	30.7	23.3	0.76	4.7	30.1	22.9	0.76	4.7	29.6	22.8	0.77	4.8	29.1	22.4	0.77	5.0	28.5	22.2	0.78	5.3
	22	31.6	21.8	0.69	4.8	31.0	21.4	0.69	4.8	30.5	21.4	0.70	4.9	30.0	21.0	0.70	5.1	29.4	20.8	0.71	5.4
	23	32.7	20.3	0.62	4.9	32.1	19.9	0.62	4.9	31.6	19.9	0.63	5.0	31.0	19.5	0.63	5.2	30.3	19.4	0.64	5.5
	24	33.9	18.6	0.55	5.0	33.2	18.3	0.55	5.0	32.7	18.1	0.55	5.1	32.1	18.0	0.56	5.3	31.4	17.6	0.56	5.6

※Q; Cooling Capacity, SHC; Sensible Heat Capacity, W; Compressor Input

Total input = Compressor input + indoor fan motor input + outdoor fan motor input

Factor for Various Air Flow

Air Volume	CMM	80	85	90	95
	l/s	1330	1420	1500	1580
Cooling capacity		1.000	1.006	1.012	1.017
Compressor input		1.000	1.001	1.001	1.003

Heating Capacity (Standard Air Flow)

PRHG-8MYA

	OD WB°C													
	–15		–10		–5		0		5		10		15	
Indoor	Q	W	Q	W	Q	W	Q	W	Q	W	Q	W	Q	W
DB°C	kW	kW	kW	kW	kW	kW	kW	kW	kW	kW	kW	kW	kW	kW
15	13.5	3.4	15.4	3.6	17.6	3.9	20.1	4.4	22.9	4.8	26.0	5.4	29.5	6.0
16	13.4	3.4	15.3	3.6	17.5	3.9	20.0	4.4	22.8	4.9	25.9	5.5	29.5	6.1
17	13.3	3.4	15.2	3.6	17.4	3.9	19.9	4.4	22.7	4.9	25.9	5.5	29.4	6.2
18	13.2	3.4	15.1	3.6	17.3	3.9	19.9	4.5	22.6	5.0	25.8	5.6	29.3	6.3
19	13.2	3.4	15.1	3.6	17.3	4.0	19.8	4.5	22.6	5.1	25.7	5.7	29.2	6.4
20	13.1	3.5	15.0	3.7	17.2	4.0	19.7	4.6	22.5	5.1	25.6	5.8	29.1	6.5
21	13.0	3.5	14.9	3.7	17.1	4.0	19.6	4.6	22.4	5.2	25.5	5.8	29.1	6.6
22	12.9	3.5	14.8	3.7	17.0	4.1	19.5	4.6	22.3	5.2	25.5	5.9	29.0	6.7
23	12.8	3.5	14.7	3.7	17.0	4.1	19.5	4.7	22.2	5.3	25.4	5.9	28.9	6.7
24	12.8	3.6	14.7	3.8	16.9	4.1	19.4	4.7	22.2	5.3	25.3	6.0	28.8	6.8
25	12.7	3.6	14.6	3.8	16.8	4.2	19.3	4.8	22.1	5.4	25.2	6.1	28.7	6.9
26	12.6	3.6	14.5	3.8	16.7	4.2	19.2	4.8	22.0	5.4	25.1	6.2	28.6	7.0
27	12.6	3.6	14.5	3.8	16.7	4.2	19.2	4.8	22.0	5.4	25.1	6.2	28.6	7.0

※Q; Heating Capacity, W; Compressor Input

Factor for Various Air Flow

Air Volume	CMM	80	85	90	95
	l/s	1330	1420	1500	1580
Heating capacity		1.000	1.004	1.090	1.015
Compressor input		1.000	0.996	0.992	0.987

Cooling Capacity (Standard Air Flow)

PRHG-10MYA

		Outdoor DB°C																							
		20.0				25.0				30.0				35.0				40.0				46.0			
Indoor	Indoor	Q	SHC	SHF	W	Q	SHC	SHF	W	Q	SHC	SHF	W	Q	SHC	SHF	W	Q	SHC	SHF	W	Q	SHC	SHF	W
DB°C	WB°C	kW	kW		kW	kW	kW		kW	kW	kW		kW	kW	kW		kW	kW	kW		kW	kW	kW		kW
20	15	29.4	21.2	0.72	7.1	28.4	20.7	0.73	7.4	27.3	20.2	0.74	7.8	26.1	19.6	0.75	8.3	24.4	18.5	0.76	8.8	23.3	18.4	0.79	9.5
	16	30.4	19.5	0.64	7.2	29.4	18.8	0.64	7.5	28.2	18.3	0.65	8.0	27.0	17.8	0.66	8.4	25.7	17.2	0.67	9.0	24.1	16.6	0.69	9.7
	17	31.4	17.6	0.56	7.3	30.3	17.0	0.56	7.7	29.1	16.6	0.57	8.1	27.9	15.9	0.57	8.6	26.6	15.4	0.58	9.2	24.9	14.7	0.59	9.9
22	15	29.4	24.7	0.84	7.1	28.4	24.1	0.85	7.4	27.3	23.8	0.87	7.8	26.1	23.2	0.89	8.3	24.4	22.2	0.91	8.8	23.3	22.1	0.95	9.5
	16	30.4	23.1	0.76	7.2	29.4	22.6	0.77	7.5	28.2	22.0	0.78	8.0	27.0	21.6	0.80	8.4	25.7	21.1	0.82	9.0	24.1	20.5	0.85	9.7
	17	31.4	21.4	0.68	7.3	30.3	20.6	0.68	7.7	29.1	20.1	0.69	8.1	27.9	19.5	0.70	8.6	26.6	18.9	0.71	9.2	24.9	18.4	0.74	9.9
	18	32.4	19.4	0.60	7.4	31.3	18.8	0.60	7.8	30.0	18.3	0.61	8.3	28.7	17.8	0.62	8.8	27.4	17.3	0.63	9.4	25.7	16.7	0.65	10.1
	19	33.5	17.4	0.52	7.5	32.3	16.8	0.52	7.9	31.0	16.4	0.53	8.5	29.7	16.0	0.54	9.0	28.3	15.6	0.55	9.6	26.6	14.9	0.56	10.3
24	16	30.4	26.8	0.88	7.2	29.4	26.5	0.90	7.5	28.2	25.9	0.92	8.0	27.0	25.4	0.94	8.4	25.7	24.7	0.96	9.0	24.1	24.1	1.00	9.7
	17	31.4	25.1	0.80	7.3	30.3	24.5	0.81	7.7	29.1	23.9	0.82	8.1	27.9	23.2	0.83	8.6	26.6	22.6	0.85	9.2	24.9	22.2	0.89	9.9
	18	32.4	23.3	0.72	7.4	31.3	22.8	0.73	7.8	30.0	22.2	0.74	8.3	28.7	21.5	0.75	8.8	27.4	21.1	0.77	9.4	25.7	20.3	0.79	10.1
	19	33.5	21.1	0.63	7.5	32.3	20.7	0.64	7.9	31.0	20.2	0.65	8.5	29.7	19.6	0.66	9.0	28.3	19.0	0.67	9.6	26.6	18.4	0.69	10.3
	20	34.6	19.0	0.55	7.6	33.4	18.4	0.55	8.1	32.1	18.0	0.56	8.6	30.6	17.4	0.57	9.2	29.2	16.9	0.58	9.8	27.4	16.4	0.60	10.5
	21	35.7	17.1	0.48	7.7	34.4	16.5	0.48	8.2	33.0	16.2	0.49	8.8	31.6	15.8	0.50	9.4	30.1	15.4	0.51	10.0	28.3	14.7	0.52	10.7
26	18	32.4	26.9	0.83	7.4	31.3	26.3	0.84	7.8	30.0	25.8	0.86	8.3	28.7	25.3	0.88	8.8	27.4	24.7	0.90	9.4	25.7	23.9	0.93	10.1
	19	33.5	24.8	0.74	7.5	32.3	24.2	0.75	7.9	31.0	23.6	0.76	8.5	29.7	23.2	0.78	9.0	28.3	22.6	0.80	9.6	26.6	21.8	0.82	10.3
	20	34.6	22.8	0.66	7.6	33.4	22.4	0.67	8.1	32.1	21.8	0.68	8.6	30.6	21.1	0.69	9.2	29.2	20.4	0.70	9.8	27.4	20.0	0.73	10.5
	21	35.7	20.7	0.58	7.7	34.4	20.0	0.58	8.2	33.0	19.5	0.59	8.8	31.6	19.0	0.60	9.4	30.1	18.4	0.61	10.0	28.3	18.1	0.64	10.7
	22	36.8	18.8	0.51	7.9	35.4	18.1	0.51	8.4	34.0	17.7	0.52	9.0	32.5	17.2	0.53	9.6	31.0	16.7	0.54	10.2	29.1	16.3	0.56	10.9
	23	38.0	17.1	0.45	8.0	36.6	16.5	0.45	8.6	35.1	16.1	0.46	9.2	33.5	15.4	0.46	9.8	31.9	15.0	0.47	10.4	30.0	14.4	0.48	11.1
28	19	33.5	28.1	0.84	7.5	32.3	27.5	0.85	7.9	31.0	27.0	0.87	8.5	29.7	26.4	0.89	9.0	28.3	25.8	0.91	9.6	26.6	25.3	0.95	10.3
	20	34.6	26.3	0.76	7.6	33.4	25.7	0.77	8.1	32.1	25.4	0.79	8.6	30.6	24.8	0.81	9.2	29.2	24.2	0.83	9.8	27.4	23.6	0.86	10.5
	21	35.7	24.6	0.69	7.7	34.4	24.1	0.70	8.2	33.0	23.4	0.71	8.8	31.6	23.1	0.73	9.4	30.1	22.6	0.75	10.0	28.3	21.8	0.77	10.7
	22	36.8	22.4	0.61	7.9	35.4	21.9	0.62	8.4	34.0	21.4	0.63	9.0	32.5	21.1	0.65	9.6	31.0	20.5	0.66	10.2	29.1	19.8	0.68	10.9
	23	38.0	20.5	0.54	8.0	36.6	20.1	0.55	8.6	35.1	19.7	0.56	9.2	33.5	19.1	0.57	9.8	31.9	18.5	0.58	10.4	30.0	18.0	0.60	11.1
	24	39.2	18.8	0.48	8.2	37.7	18.1	0.48	8.8	36.1	17.7	0.49	9.4	34.5	17.3	0.50	10.0	32.9	16.8	0.51	10.7	30.8	16.0	0.52	11.4
30	20	34.6	30.1	0.87	7.6	33.4	29.7	0.89	8.1	32.1	29.2	0.91	8.6	30.6	28.5	0.93	9.2	29.2	28.0	0.96	9.8	27.4	27.1	0.99	10.5
	21	35.7	28.2	0.79	7.7	34.4	27.9	0.81	8.2	33.0	27.4	0.83	8.8	31.6	26.9	0.85	9.4	30.1	26.2	0.87	10.0	28.3	25.8	0.91	10.7
	22	36.8	26.1	0.71	7.9	35.4	25.5	0.72	8.4	34.0	25.2	0.74	9.0	32.5	24.7	0.76	9.6	31.0	24.2	0.78	10.2	29.1	23.3	0.80	10.9
	23	38.0	24.3	0.64	8.0	36.6	23.8	0.65	8.6	35.1	23.5	0.67	9.2	33.5	22.8	0.68	9.8	31.9	22.3	0.70	10.4	30.0	21.6	0.72	11.1
	24	39.2	22.3	0.57	8.2	37.7	21.9	0.58	8.8	36.1	21.3	0.59	9.4	34.5	20.7	0.60	10.0	32.9	20.1	0.61	10.7	30.8	19.7	0.64	11.4

※Q; Cooling Capacity, SHC; Sensible Heat Capacity, W; Compressor Input

Total input = Compressor input + indoor fan motor input + outdoor fan motor input

Factor for Various Air Flow

Air Volume	CMM	90	100	110	120
	l/s	1500	1670	1830	2000
Cooling capacity		0.987	1.000	1.012	1.022
Compressor input		0.996	1.000	1.003	1.007

Cooling Capacity (Standard Air Flow)

PRHG-10MYA (Use for Low ambient cooling parts)

		Outdoor DB°C																			
		–5.0				0.0				5.0				10.0				15.0			
Indoor	Indoor	Q	SHC	SHF	W	Q	SHC	SHF	W	Q	SHC	SHF	W	Q	SHC	SHF	W	Q	SHC	SHF	W
DB°C	WB°C	kW	kW		kW	kW	kW		kW	kW	kW		kW	kW	kW		kW	kW	kW		kW
20	15	32.7	22.5	0.69	6.3	32.1	22.2	0.69	6.3	31.6	22.1	0.70	6.4	31.1	22.1	0.71	6.6	30.5	22.0	0.72	6.8
	16	33.8	21.0	0.62	6.3	33.3	20.6	0.62	6.3	32.8	20.3	0.62	6.4	32.2	20.3	0.63	6.6	31.6	19.9	0.63	6.9
	17	35.0	18.9	0.54	6.4	34.4	18.6	0.54	6.4	33.9	18.3	0.54	6.5	33.3	18.3	0.55	6.7	32.7	18.0	0.55	7.0
22	15	32.7	26.5	0.81	6.3	32.1	26.3	0.82	6.3	31.6	25.9	0.82	6.4	31.1	25.8	0.83	6.6	30.5	25.3	0.83	6.8
	16	33.8	24.7	0.73	6.3	33.3	24.6	0.74	6.3	32.8	24.2	0.74	6.4	32.2	24.1	0.75	6.6	31.6	23.7	0.75	6.9
	17	35.0	22.8	0.65	6.4	34.4	22.7	0.66	6.4	33.9	22.4	0.66	6.5	33.3	22.3	0.67	6.7	32.7	21.9	0.67	7.0
	18	36.2	21.0	0.58	6.5	35.6	20.6	0.58	6.5	35.0	20.3	0.58	6.6	34.4	20.3	0.59	6.8	33.7	19.9	0.59	7.0
	19	37.5	19.1	0.51	6.6	36.8	18.8	0.51	6.6	36.3	18.5	0.51	6.7	35.6	18.2	0.51	6.9	34.9	18.2	0.52	7.1
24	16	33.8	28.8	0.85	6.3	33.3	28.6	0.86	6.3	32.8	28.2	0.86	6.4	32.2	28.0	0.87	6.6	31.6	27.8	0.88	6.9
	17	35.0	26.6	0.76	6.4	34.4	26.1	0.76	6.4	33.9	26.1	0.77	6.5	33.3	26.0	0.78	6.7	32.7	25.8	0.79	7.0
	18	36.2	25.0	0.69	6.5	35.6	24.5	0.69	6.5	35.0	24.5	0.70	6.6	34.4	24.1	0.70	6.8	33.7	23.9	0.71	7.0
	19	37.5	22.9	0.61	6.6	36.8	22.5	0.61	6.6	36.3	22.5	0.62	6.7	35.6	22.1	0.62	6.9	34.9	22.0	0.63	7.1
	20	38.8	20.9	0.54	6.7	38.1	20.6	0.54	6.7	37.5	20.2	0.54	6.8	36.8	19.9	0.54	7.0	36.1	19.8	0.55	7.2
	21	40.1	18.8	0.47	6.8	39.4	18.5	0.47	6.8	38.7	18.2	0.47	6.9	38.0	17.9	0.47	7.0	37.3	17.9	0.48	7.3
26	18	36.2	28.6	0.79	6.5	35.6	28.1	0.79	6.5	35.0	28.0	0.80	6.6	34.4	27.5	0.80	6.8	33.7	27.3	0.81	7.0
	19	37.5	26.6	0.71	6.6	36.8	26.1	0.71	6.6	36.3	26.1	0.72	6.7	35.6	25.6	0.72	6.9	34.9	25.5	0.73	7.1
	20	38.8	24.4	0.63	6.7	38.1	24.4	0.64	6.7	37.5	24.0	0.64	6.8	36.8	23.9	0.65	7.0	36.1	23.5	0.65	7.2
	21	40.1	22.5	0.56	6.8	39.4	22.4	0.57	6.8	38.7	22.1	0.57	6.9	38.0	22.1	0.58	7.0	37.3	21.6	0.58	7.3
	22	41.4	20.7	0.50	6.9	40.6	20.3	0.50	6.9	40.0	20.0	0.50	7.0	39.3	20.0	0.51	7.2	38.5	19.6	0.51	7.5
	23	42.8	18.8	0.44	7.0	42.0	18.5	0.44	7.0	41.4	18.2	0.44	7.1	40.6	17.9	0.44	7.3	39.7	17.9	0.45	7.6
28	19	37.5	30.4	0.81	6.6	36.8	29.8	0.81	6.6	36.3	29.7	0.82	6.7	35.6	29.2	0.82	6.9	34.9	29.0	0.83	7.1
	20	38.8	28.3	0.73	6.7	38.1	27.8	0.73	6.7	37.5	27.7	0.74	6.8	36.8	27.2	0.74	7.0	36.1	27.1	0.75	7.2
	21	40.1	26.5	0.66	6.8	39.4	26.0	0.66	6.8	38.7	26.0	0.67	6.9	38.0	25.5	0.67	7.0	37.3	25.3	0.68	7.3
	22	41.4	24.4	0.59	6.9	40.6	24.0	0.59	6.9	40.0	24.0	0.60	7.0	39.3	23.6	0.60	7.2	38.5	23.5	0.61	7.5
	23	42.8	22.3	0.52	7.0	42.0	21.9	0.52	7.0	41.4	21.9	0.53	7.1	40.6	21.5	0.53	7.3	39.7	21.5	0.54	7.6
	24	44.3	20.4	0.46	7.0	43.4	20.0	0.46	7.0	42.7	20.1	0.47	7.2	41.9	19.7	0.47	7.4	41.0	19.3	0.47	7.8
30	20	38.8	31.8	0.82	6.7	38.1	31.6	0.83	6.7	37.5	31.5	0.84	6.8	36.8	31.3	0.85	7.0	36.1	31.0	0.86	7.2
	21	40.1	30.1	0.75	6.8	39.4	29.5	0.75	6.8	38.7	29.4	0.76	6.9	38.0	29.3	0.77	7.0	37.3	29.1	0.78	7.3
	22	41.4	28.2	0.68	6.9	40.6	27.6	0.68	6.9	40.0	27.6	0.69	7.0	39.3	27.1	0.69	7.2	38.5	26.9	0.70	7.5
	23	42.8	26.1	0.61	7.0	42.0	25.6	0.61	7.0	41.4	25.6	0.62	7.1	40.6	25.2	0.62	7.3	39.7	25.0	0.63	7.6
	24	44.3	24.3	0.55	7.0	43.4	23.9	0.55	7.0	42.7	23.9	0.56	7.2	41.9	23.5	0.56	7.4	41.0	23.4	0.57	7.8

※Q; Cooling Capacity, SHC; Sensible Heat Capacity, W; Compressor Input

Total input = Compressor input + indoor fan motor input + outdoor fan motor input

Factor for Various Air Flow

Air Volume	CMM	90	100	110	120
	l/s	1500	1670	1830	2000
Cooling capacity		0.987	1.000	1.012	1.022
Compressor input		0.996	1.000	1.003	1.007

Heating Capacity (Standard Air Flow)

PRHG-10MYA

	OD WB°C													
	–15		–10		–5		0		5		10		15	
Indoor	Q	W	Q	W	Q	W	Q	W	Q	W	Q	W	Q	W
DB°C	kW	kW	kW	kW	kW	kW	kW	kW	kW	kW	kW	kW	kW	kW
15	18.7	5.3	21.5	5.5	24.6	5.8	28.0	6.3	31.9	6.9	36.5	7.7	41.1	8.4
16	18.6	5.3	21.4	5.5	24.5	5.8	27.9	6.4	31.8	7.0	36.4	7.8	40.9	8.5
17	18.5	5.3	21.3	5.5	24.4	5.9	27.8	6.4	31.7	7.1	36.2	7.9	40.7	8.6
18	18.4	5.4	21.2	5.6	24.3	5.9	27.7	6.5	31.6	7.1	36.1	7.9	40.6	8.7
19	18.3	5.4	21.1	5.6	24.2	6.0	27.6	6.6	31.4	7.2	35.9	8.0	40.4	8.8
20	18.2	5.4	21.0	5.6	24.1	6.0	27.5	6.6	31.3	7.3	35.8	8.1	40.2	8.9
21	18.1	5.5	20.9	5.7	24.0	6.1	27.4	6.7	31.2	7.4	35.7	8.2	40.1	9.0
22	18.0	5.5	20.8	5.7	23.9	6.1	27.3	6.8	31.1	7.4	35.5	8.3	39.9	9.1
23	17.9	5.5	20.7	5.7	23.8	6.2	27.2	6.8	30.9	7.5	35.3	8.4	39.7	9.2
24	17.8	5.6	20.6	5.8	23.7	6.2	27.1	6.9	30.8	7.6	35.2	8.5	39.6	9.3
25	17.8	5.6	20.5	5.8	23.5	6.3	26.9	6.9	30.7	7.7	35.1	8.6	39.4	9.4
26	17.8	5.6	20.5	5.8	23.5	6.3	26.9	7.0	30.6	7.7	35.0	8.6	39.3	9.5
27	17.7	5.6	20.4	5.8	23.4	6.3	26.8	7.0	30.5	7.8	34.8	8.7	39.1	9.6

※Q; Heating Capacity, W; Compressor Input

Factor for Various Air Flow

Air Volume	CMM	90	100	110	120
	l/s	1500	1670	1830	2000
Heating capacity		0.991	1.000	1.009	1.017
Compressor input		1.013	1.000	0.987	0.974

Cooling Capacity (Standard Air Flow)

PRHG-15MYA

		Outdoor DB°C																							
		20.0				25.0				30.0				35.0				40.0				46.0			
Indoor	Indoor	Q	SHC	SHF	W	Q	SHC	SHF	W	Q	SHC	SHF	W	Q	SHC	SHF	W	Q	SHC	SHF	W	Q	SHC	SHF	W
DB°C	WB°C	kW	kW		kW	kW	kW		kW	kW	kW		kW	kW	kW		kW	kW	kW		kW	kW	kW		kW
20	15	44.5	32.0	0.72	10.3	43.3	31.2	0.72	10.9	42.0	30.7	0.73	11.6	40.8	30.2	0.74	12.3	39.5	29.6	0.75	13.0	37.8	29.1	0.77	13.9
	16	45.7	29.2	0.64	10.4	44.5	28.5	0.64	11.1	43.2	28.1	0.65	11.8	42.0	27.7	0.66	12.5	40.7	27.3	0.67	13.3	39.0	26.5	0.68	14.2
	17	47.2	26.0	0.55	10.5	46.0	25.3	0.55	11.3	44.7	25.0	0.56	12.0	43.3	24.7	0.57	12.7	41.9	23.9	0.57	13.5	40.1	23.3	0.58	14.5
22	15	44.5	37.8	0.85	10.3	43.3	37.2	0.86	10.9	42.0	36.5	0.87	11.6	40.8	35.9	0.88	12.3	39.5	35.2	0.89	13.0	37.8	34.4	0.91	13.9
	16	45.7	34.7	0.76	10.4	44.5	34.3	0.77	11.1	43.2	33.7	0.78	11.8	42.0	33.2	0.79	12.5	40.7	32.6	0.80	13.3	39.0	32.0	0.82	14.2
	17	47.2	31.6	0.67	10.5	46.0	31.3	0.68	11.3	44.7	30.8	0.69	12.0	43.3	30.3	0.70	12.7	41.9	29.7	0.71	13.5	40.1	28.9	0.72	14.5
	18	48.9	28.9	0.59	10.7	47.6	28.1	0.59	11.4	46.2	27.7	0.60	12.2	44.8	27.3	0.61	13.0	43.2	26.8	0.62	13.8	41.2	26.0	0.63	14.8
	19	50.5	26.3	0.52	10.9	49.2	25.6	0.52	11.6	47.8	25.3	0.53	12.4	46.3	24.5	0.53	13.2	44.7	24.1	0.54	14.1	42.6	23.4	0.55	15.1
24	16	45.7	40.2	0.88	10.4	44.5	39.6	0.89	11.1	43.2	39.3	0.91	11.8	42.0	39.1	0.93	12.5	40.7	38.7	0.95	13.3	39.0	37.8	0.97	14.2
	17	47.2	37.3	0.79	10.5	46.0	36.8	0.80	11.3	44.7	36.2	0.81	12.0	43.3	35.9	0.83	12.7	41.9	35.6	0.85	13.5	40.1	34.9	0.87	14.5
	18	48.9	34.7	0.71	10.7	47.6	34.3	0.72	11.4	46.2	33.7	0.73	12.2	44.8	33.2	0.74	13.0	43.2	32.4	0.75	13.8	41.2	31.7	0.77	14.8
	19	50.5	31.8	0.63	10.9	49.2	31.0	0.63	11.6	47.8	30.6	0.64	12.4	46.3	30.1	0.65	13.2	44.7	29.5	0.66	14.1	42.6	28.5	0.67	15.1
	20	52.1	28.7	0.55	11.0	50.7	27.9	0.55	11.8	49.3	27.6	0.56	12.6	47.7	27.2	0.57	13.4	46.1	26.7	0.58	14.3	44.1	26.0	0.59	15.4
	21	53.9	26.4	0.49	11.2	52.3	25.6	0.49	12.0	50.8	25.4	0.50	12.8	49.2	24.6	0.50	13.6	47.6	24.3	0.51	14.6	45.5	23.2	0.51	15.7
26	18	48.9	40.6	0.83	10.7	47.6	40.0	0.84	11.4	46.2	39.7	0.86	12.2	44.8	39.0	0.87	13.0	43.2	38.4	0.89	13.8	41.2	37.1	0.90	14.8
	19	50.5	37.4	0.74	10.9	49.2	36.9	0.75	11.6	47.8	36.3	0.76	12.4	46.3	35.7	0.77	13.2	44.7	34.9	0.78	14.1	42.6	34.1	0.80	15.1
	20	52.1	34.4	0.66	11.0	50.7	33.5	0.66	11.8	49.3	33.0	0.67	12.6	47.7	32.4	0.68	13.4	46.1	31.8	0.69	14.3	44.1	31.3	0.71	15.4
	21	53.9	31.8	0.59	11.2	52.3	30.9	0.59	12.0	50.8	30.5	0.60	12.8	49.2	30.0	0.61	13.6	47.6	29.5	0.62	14.6	45.5	28.7	0.63	15.7
	22	55.7	29.0	0.52	11.4	54.0	28.1	0.52	12.2	52.4	27.8	0.53	13.0	50.7	26.9	0.53	13.9	49.0	26.5	0.54	14.8	47.0	25.9	0.55	16.0
	23	57.3	25.8	0.45	11.5	55.7	25.1	0.45	12.4	54.0	24.3	0.45	13.2	52.3	24.1	0.46	14.1	50.5	23.2	0.46	15.0	48.4	22.7	0.47	16.2
28	19	50.5	43.4	0.86	10.9	49.2	42.8	0.87	11.6	47.8	42.1	0.88	12.4	46.3	41.2	0.89	13.2	44.7	40.7	0.91	14.1	42.6	39.6	0.93	15.1
	20	52.1	40.1	0.77	11.0	50.7	39.5	0.78	11.8	49.3	38.9	0.79	12.6	47.7	38.2	0.80	13.4	46.1	37.3	0.81	14.3	44.1	36.6	0.83	15.4
	21	53.9	37.2	0.69	11.2	52.3	36.6	0.70	12.0	50.8	36.1	0.71	12.8	49.2	35.4	0.72	13.6	47.6	34.7	0.73	14.6	45.5	34.1	0.75	15.7
	22	55.7	34.5	0.62	11.4	54.0	34.0	0.63	12.2	52.4	33.5	0.64	13.0	50.7	32.4	0.64	13.9	49.0	31.9	0.65	14.8	47.0	31.0	0.66	16.0
	23	57.3	31.5	0.55	11.5	55.7	31.2	0.56	12.4	54.0	30.2	0.56	13.2	52.3	29.8	0.57	14.1	50.5	28.8	0.57	15.0	48.4	28.1	0.58	16.2
	24	59.0	28.3	0.48	11.7	57.4	28.1	0.49	12.6	55.6	27.2	0.49	13.5	53.9	27.0	0.50	14.4	52.0	26.0	0.50	15.3	49.8	25.4	0.51	16.4
30	20	52.1	45.8	0.88	11.0	50.7	45.1	0.89	11.8	49.3	44.4	0.90	12.6	47.7	43.9	0.92	13.4	46.1	43.3	0.94	14.3	44.1	41.9	0.95	15.4
	21	53.9	43.1	0.80	11.2	52.3	42.4	0.81	12.0	50.8	41.7	0.82	12.8	49.2	41.3	0.84	13.6	47.6	40.9	0.86	14.6	45.5	40.0	0.88	15.7
	22	55.7	40.7	0.73	11.4	54.0	39.4	0.73	12.2	52.4	38.8	0.74	13.0	50.7	38.0	0.75	13.9	49.0	37.2	0.76	14.8	47.0	36.7	0.78	16.0
	23	57.3	37.2	0.65	11.5	55.7	36.2	0.65	12.4	54.0	35.6	0.66	13.2	52.3	35.0	0.67	14.1	50.5	34.3	0.68	15.0	48.4	33.9	0.70	16.2
	24	59.0	33.6	0.57	11.7	57.4	32.7	0.57	12.6	55.6	32.2	0.58	13.5	53.9	31.8	0.59	14.4	52.0	31.2	0.60	15.3	49.8	30.9	0.62	16.4

※Q; Cooling Capacity, SHC; Sensible Heat Capacity, W; Compressor Input

Total input = Compressor input + indoor fan motor input + outdoor fan motor input

Factor for Various Air Flow

Air Volume	CMM	120	140	160	180
	l/s	2000	2330	2670	3000
Cooling capacity		0.962	0.982	1.000	1.018
Compressor input		0.984	0.991	1.000	1.009

Cooling Capacity (Standard Air Flow)

PRHG-15MYA (Use for Low ambient cooling parts)

		Outdoor DB°C																			
		–5.0				0.0				5.0				10.0				15.0			
Indoor	Indoor	Q	SHC	SHF	W	Q	SHC	SHF	W	Q	SHC	SHF	W	Q	SHC	SHF	W	Q	SHC	SHF	W
DB°C	WB°C	kW	kW		kW	kW	kW		kW	kW	kW		kW	kW	kW		kW	kW	kW		kW
20	15	49.4	35.1	0.71	8.8	48.6	34.5	0.71	8.9	47.9	34.0	0.71	9.1	47.1	33.9	0.72	9.4	46.2	33.3	0.72	9.8
	16	50.9	31.0	0.61	8.9	50.0	31.0	0.62	9.0	49.2	30.5	0.62	9.2	48.4	30.5	0.63	9.5	47.5	29.9	0.63	9.9
	17	52.6	27.9	0.53	9.0	51.7	27.4	0.53	9.1	50.9	27.0	0.53	9.3	50.1	27.5	0.55	9.6	49.1	27.0	0.55	10.0
22	15	49.4	41.0	0.83	8.8	48.6	40.3	0.83	8.9	47.9	39.7	0.83	9.1	47.1	39.5	0.84	9.4	46.2	38.8	0.84	9.8
	16	50.9	37.6	0.74	8.9	50.0	37.0	0.74	9.0	49.2	36.4	0.74	9.2	48.4	36.3	0.75	9.5	47.5	35.6	0.75	9.9
	17	52.6	34.7	0.66	9.0	51.7	34.1	0.66	9.1	50.9	33.6	0.66	9.3	50.1	33.5	0.67	9.6	49.1	32.9	0.67	10.0
	18	54.6	31.7	0.58	9.1	53.7	31.1	0.58	9.2	52.8	30.7	0.58	9.4	51.9	30.6	0.59	9.7	50.9	30.0	0.59	10.1
	19	56.5	28.8	0.51	9.2	55.5	28.3	0.51	9.3	54.7	27.9	0.51	9.5	53.7	27.9	0.52	9.8	52.6	27.4	0.52	10.2
24	16	50.9	43.7	0.86	8.9	50.0	43.5	0.87	9.0	49.2	42.8	0.87	9.2	48.4	42.6	0.88	9.5	47.5	41.8	0.88	9.9
	17	52.6	41.0	0.78	9.0	51.7	40.3	0.78	9.1	50.9	39.7	0.78	9.3	50.1	39.5	0.79	9.6	49.1	38.8	0.79	10.0
	18	54.6	38.2	0.70	9.1	53.7	37.6	0.70	9.2	52.8	37.0	0.70	9.4	51.9	36.9	0.71	9.7	50.9	36.1	0.71	10.1
	19	56.5	34.5	0.61	9.2	55.5	34.0	0.61	9.3	54.7	33.5	0.61	9.5	53.7	33.3	0.62	9.8	52.6	32.6	0.62	10.2
	20	58.4	31.5	0.54	9.3	57.4	31.0	0.54	9.4	56.5	30.5	0.54	9.6	55.4	30.5	0.55	10.0	54.3	29.9	0.55	10.4
	21	60.5	28.4	0.47	9.4	59.4	27.9	0.47	9.5	58.5	27.5	0.47	9.7	57.4	27.6	0.48	10.1	56.3	27.0	0.48	10.5
26	18	54.6	43.7	0.80	9.1	53.7	42.9	0.80	9.2	52.8	42.8	0.81	9.4	51.9	42.1	0.81	9.7	50.9	41.7	0.82	10.1
	19	56.5	40.1	0.71	9.2	55.5	39.4	0.71	9.3	54.7	39.3	0.72	9.5	53.7	38.6	0.72	9.8	52.6	38.4	0.73	10.2
	20	58.4	37.4	0.64	9.3	57.4	36.7	0.64	9.4	56.5	36.1	0.64	9.6	55.4	36.0	0.65	10.0	54.3	35.3	0.65	10.4
	21	60.5	34.5	0.57	9.4	59.4	33.9	0.57	9.5	58.5	33.3	0.57	9.7	57.4	33.3	0.58	10.1	56.3	32.6	0.58	10.5
	22	62.7	31.3	0.50	9.5	61.5	30.8	0.50	9.6	60.5	30.3	0.50	9.8	59.4	30.3	0.51	10.2	58.2	29.7	0.51	10.7
	23	64.6	28.4	0.44	9.6	63.4	27.9	0.44	9.7	62.4	27.4	0.44	9.9	61.2	27.5	0.45	10.3	59.9	27.0	0.45	10.8
28	19	56.5	46.3	0.82	9.2	55.5	45.5	0.82	9.3	54.7	45.4	0.83	9.5	53.7	45.1	0.84	9.8	52.6	44.7	0.85	10.2
	20	58.4	43.2	0.74	9.3	57.4	42.4	0.74	9.4	56.5	42.3	0.75	9.6	55.4	41.6	0.75	10.0	54.3	41.3	0.76	10.4
	21	60.5	40.6	0.67	9.4	59.4	39.8	0.67	9.5	58.5	39.8	0.68	9.7	57.4	39.0	0.68	10.1	56.3	38.8	0.69	10.5
	22	62.7	37.6	0.60	9.5	61.5	36.9	0.60	9.6	60.5	36.9	0.61	9.8	59.4	36.2	0.61	10.2	58.2	36.1	0.62	10.7
	23	64.6	34.2	0.53	9.6	63.4	33.6	0.53	9.7	62.4	33.7	0.54	9.9	61.2	33.0	0.54	10.3	59.9	33.0	0.55	10.8
	24	66.6	31.3	0.47	9.7	65.4	30.7	0.47	9.8	64.3	30.2	0.47	10.1	63.1	30.3	0.48	10.5	61.8	29.7	0.48	11.0
30	20	58.4	49.1	0.84	9.3	57.4	48.8	0.85	9.4	56.5	48.0	0.85	9.6	55.4	47.7	0.86	10.0	54.3	47.3	0.87	10.4
	21	60.5	46.0	0.76	9.4	59.4	45.8	0.77	9.5	58.5	45.0	0.77	9.7	57.4	44.8	0.78	10.1	56.3	44.5	0.79	10.5
	22	62.7	43.2	0.69	9.5	61.5	42.4	0.69	9.6	60.5	42.4	0.70	9.8	59.4	42.2	0.71	10.2	58.2	41.9	0.72	10.7
	23	64.6	40.0	0.62	9.6	63.4	39.3	0.62	9.7	62.4	38.7	0.62	9.9	61.2	38.5	0.63	10.3	59.9	38.4	0.64	10.8
	24	66.6	37.3	0.56	9.7	65.4	36.6	0.56	9.8	64.3	36.0	0.56	10.1	63.1	36.0	0.57	10.5	61.8	35.2	0.57	11.0

※Q; Cooling Capacity, SHC; Sensible Heat Capacity, W; Compressor Input

Total input = Compressor input + indoor fan motor input + outdoor fan motor input

Factor for Various Air Flow

Air Volume	CMM	120	140	160	180
	l/s	2000	2330	2670	3000
Cooling capacity		0.962	0.982	1.000	1.018
Compressor input		0.984	0.991	1.000	1.009

Heating Capacity (Standard Air Flow)

PRHG-15MYA

	OD WB°C													
	–15		–10		–5		0		5		10		15	
Indoor	Q	W	Q	W	Q	W	Q	W	Q	W	Q	W	Q	W
DB°C	kW	kW	kW	kW	kW	kW	kW	kW	kW	kW	kW	kW	kW	kW
15	27.5	7.0	31.0	7.7	35.1	8.5	39.9	9.3	45.4	10.4	51.6	11.6	58.8	13.0
16	27.3	7.0	30.8	7.7	34.9	8.5	39.7	9.4	45.2	10.5	51.4	11.7	58.6	13.2
17	27.1	7.1	30.6	7.8	34.7	8.6	39.5	9.5	45.0	10.6	51.2	12.0	58.3	13.3
18	26.9	7.1	30.4	7.8	34.5	8.6	39.3	9.7	44.8	10.8	51.0	12.1	58.1	13.5
19	26.6	7.2	30.2	7.9	34.4	8.7	39.2	9.8	44.6	10.9	50.8	12.2	57.8	13.7
20	26.5	7.2	30.1	7.9	34.3	8.8	39.0	9.9	44.5	11.1	50.6	12.4	57.6	13.8
21	26.3	7.4	29.9	8.0	34.1	8.8	38.9	10.0	44.3	11.2	50.5	12.5	57.4	14.1
22	26.2	7.4	29.8	8.0	34.0	8.9	38.8	10.0	44.2	11.3	50.3	12.6	57.2	14.2
23	26.0	7.5	29.6	8.1	33.8	8.9	38.7	10.1	44.1	11.4	50.2	12.7	57.0	14.4
24	25.9	7.5	29.5	8.1	33.7	9.0	38.5	10.2	43.9	11.5	50.0	13.0	56.7	14.5
25	25.8	7.6	29.4	8.2	33.6	9.1	38.4	10.3	43.8	11.6	49.8	13.1	56.5	14.7
26	25.7	7.6	29.3	8.2	33.5	9.2	38.2	10.4	43.6	11.7	49.6	13.2	56.2	14.9
27	25.5	7.7	29.1	8.3	33.3	9.3	38.0	10.5	43.4	11.9	49.4	13.4	56.0	15.0

※Q; Heating Capacity, W; Compressor Input

Factor for Various Air Flow

Air Volume	CMM	120	140	160	180
	l/s	2000	2330	2670	3000
Heating capacity		0.973	0.985	1.000	1.015
Compressor input		1.025	1.013	1.000	0.987

Cooling Capacity (Standard Air Flow)

PRHG-20MYA

		Outdoor DB°C																							
		20.0				25.0				30.0				35.0				40.0				46.0			
Indoor	Indoor	Q	SHC	SHF	W	Q	SHC	SHF	W	Q	SHC	SHF	W	Q	SHC	SHF	W	Q	SHC	SHF	W	Q	SHC	SHF	W
DB°C	WB°C	kW	kW		kW	kW	kW		kW	kW	kW		kW	kW	kW		kW	kW	kW		kW	kW	kW		kW
20	15	59.3	42.7	0.72	13.7	57.4	41.9	0.73	14.5	55.4	40.4	0.73	15.2	53.4	39.5	0.74	16.2	51.4	38.6	0.75	17.1	48.8	37.6	0.77	18.3
	16	61.3	39.2	0.64	14.0	59.5	38.1	0.64	14.8	57.6	37.4	0.65	15.6	55.5	36.1	0.65	16.6	53.2	35.1	0.66	17.5	50.4	34.3	0.68	18.7
	17	63.2	34.8	0.55	14.1	61.2	33.7	0.55	15.0	59.2	33.2	0.56	15.9	57.0	31.9	0.56	16.8	54.8	31.2	0.57	17.9	51.9	30.1	0.58	19.2
22	15	59.3	50.4	0.85	13.7	57.4	49.4	0.86	14.5	55.4	48.2	0.87	15.2	53.4	47.0	0.88	16.2	51.4	46.3	0.90	17.1	48.8	44.9	0.92	18.3
	16	61.3	46.6	0.76	14.0	59.5	45.8	0.77	14.8	57.6	44.9	0.78	15.6	55.5	43.8	0.79	16.6	53.2	43.1	0.81	17.5	50.4	41.8	0.83	18.7
	17	63.2	43.0	0.68	14.1	61.2	41.6	0.68	15.0	59.2	40.8	0.69	15.9	57.0	39.9	0.70	16.8	54.8	38.9	0.71	17.9	51.9	37.9	0.73	19.2
	18	65.0	39.0	0.60	14.3	63.0	37.8	0.60	15.2	60.9	37.1	0.61	16.2	58.7	35.8	0.61	17.2	56.4	35.0	0.62	18.3	53.4	33.6	0.63	19.6
	19	67.0	34.8	0.52	14.5	64.9	34.4	0.53	15.4	62.7	33.2	0.53	16.5	60.8	32.2	0.53	17.5	58.0	31.3	0.54	18.6	54.9	29.6	0.54	19.9
24	16	61.3	54.6	0.89	14.0	59.5	53.6	0.90	14.8	57.6	53.0	0.92	15.6	55.5	51.6	0.93	16.6	53.2	50.5	0.95	17.5	50.4	49.4	0.98	18.7
	17	63.2	50.6	0.80	14.1	61.2	49.6	0.81	15.0	59.2	48.5	0.82	15.9	57.0	47.3	0.83	16.8	54.8	46.6	0.85	17.9	51.9	45.7	0.88	19.2
	18	65.0	46.2	0.71	14.3	63.0	45.4	0.72	15.2	60.9	44.5	0.73	16.2	58.7	43.4	0.74	17.2	56.4	42.3	0.75	18.3	53.4	41.7	0.78	19.6
	19	67.0	42.2	0.63	14.5	64.9	41.5	0.64	15.4	62.7	40.8	0.65	16.5	60.8	40.1	0.66	17.5	58.0	38.9	0.67	18.6	54.9	37.3	0.68	19.9
	20	69.0	38.0	0.55	14.8	66.8	37.4	0.56	15.7	64.6	36.8	0.57	16.7	62.2	35.5	0.57	17.9	59.7	34.6	0.58	19.0	56.5	33.3	0.59	20.3
	21	71.2	34.2	0.48	15.0	68.9	33.8	0.49	16.1	66.6	32.6	0.49	17.1	64.0	32.0	0.50	18.3	61.4	31.3	0.51	19.4	58.2	30.3	0.52	20.8
26	18	65.0	54.0	0.83	14.3	63.0	52.9	0.84	15.2	60.9	51.8	0.85	16.2	58.7	51.1	0.87	17.2	56.4	50.2	0.89	18.3	53.4	48.6	0.91	19.6
	19	67.0	49.6	0.74	14.5	64.9	48.7	0.75	15.4	62.7	47.7	0.76	16.5	60.8	46.8	0.77	17.5	58.0	45.8	0.79	18.6	54.9	44.5	0.81	19.9
	20	69.0	45.5	0.66	14.8	66.8	44.8	0.67	15.7	64.6	43.9	0.68	16.7	62.2	42.9	0.69	17.9	59.7	41.8	0.70	19.0	56.5	40.7	0.72	20.3
	21	71.2	42.0	0.59	15.0	68.9	41.3	0.60	16.1	66.6	40.6	0.61	17.1	64.0	39.7	0.62	18.3	61.4	38.7	0.63	19.4	58.2	37.8	0.65	20.8
	22	73.4	38.2	0.52	15.2	71.0	37.6	0.53	16.4	68.6	37.0	0.54	17.5	66.0	35.6	0.54	18.6	63.3	34.8	0.55	19.9	59.8	33.5	0.56	21.4
	23	75.7	34.1	0.45	15.5	73.3	33.0	0.45	16.7	70.8	32.6	0.46	17.9	68.0	31.3	0.46	19.1	65.0	30.6	0.47	20.2	61.1	28.7	0.47	21.8
28	19	67.0	57.0	0.85	14.5	64.9	55.8	0.86	15.4	62.7	54.5	0.87	16.5	60.8	54.1	0.89	17.5	58.0	52.8	0.91	18.6	54.9	52.2	0.95	19.9
	20	69.0	53.1	0.77	14.8	66.8	52.1	0.78	15.7	64.6	51.0	0.79	16.7	62.2	50.4	0.81	17.9	59.7	49.6	0.83	19.0	56.5	48.0	0.85	20.3
	21	71.2	49.8	0.70	15.0	68.9	48.9	0.71	16.1	66.6	48.0	0.72	17.1	64.0	46.7	0.73	18.3	61.4	45.4	0.74	19.4	58.2	44.2	0.76	20.8
	22	73.4	45.5	0.62	15.2	71.0	44.7	0.63	16.4	68.6	43.9	0.64	17.5	66.0	42.9	0.65	18.6	63.3	41.8	0.66	19.9	59.8	40.7	0.68	21.4
	23	75.7	41.6	0.55	15.5	73.3	41.0	0.56	16.7	70.8	39.6	0.56	17.9	68.0	38.8	0.57	19.1	65.0	37.7	0.58	20.2	61.1	36.7	0.60	21.8
	24	78.0	37.4	0.48	15.8	75.6	37.0	0.49	17.0	72.8	35.7	0.49	18.3	69.9	35.0	0.50	19.5	66.7	34.0	0.51	20.8	62.5	32.5	0.52	22.3
30	20	69.0	60.0	0.87	14.8	66.8	58.8	0.88	15.7	64.6	58.1	0.90	16.7	62.2	57.2	0.92	17.9	59.7	56.1	0.94	19.0	56.5	55.4	0.98	20.3
	21	71.2	56.2	0.79	15.0	68.9	55.1	0.80	16.1	66.6	54.6	0.82	17.1	64.0	53.8	0.84	18.3	61.4	52.8	0.86	19.4	58.2	51.8	0.89	20.8
	22	73.4	52.1	0.71	15.2	71.0	51.1	0.72	16.4	68.6	50.1	0.73	17.5	66.0	49.5	0.75	18.6	63.3	48.7	0.77	19.9	59.8	47.8	0.80	21.4
	23	75.7	48.4	0.64	15.5	73.3	47.6	0.65	16.7	70.8	46.7	0.66	17.9	68.0	45.6	0.67	19.1	65.0	44.9	0.69	20.2	61.1	43.4	0.71	21.8
	24	78.0	44.5	0.57	15.8	75.6	43.8	0.58	17.0	72.8	43.0	0.59	18.3	69.9	41.9	0.60	19.5	66.7	41.4	0.62	20.8	62.5	40.0	0.64	22.3

※Q; Cooling Capacity, SHC; Sensible Heat Capacity, W; Compressor Input

Total input = Compressor input + indoor fan motor input + outdoor fan motor input

Factor for Various Air Flow

Air Volume	CMM	170	180	200	220	240
	l/s	2830	3000	3330	3670	4000
Cooling capacity		0.977	0.987	1.000	1.010	1.020
Compressor input		0.995	0.997	1.000	1.003	1.007

Cooling Capacity (Standard Air Flow)

PRHG-20MYA (Use for Low ambient cooling parts)

		Outdoor DB°C																			
		–5.0				0.0				5.0				10.0				15.0			
Indoor	Indoor	Q	SHC	SHF	W	Q	SHC	SHF	W	Q	SHC	SHF	W	Q	SHC	SHF	W	Q	SHC	SHF	W
DB°C	WB°C	kW	kW		kW	kW	kW		kW	kW	kW		kW	kW	kW		kW	kW	kW		kW
20	15	65.9	46.1	0.70	11.9	64.8	45.3	0.70	12.0	63.8	44.7	0.70	12.3	62.7	43.9	0.70	12.7	61.6	43.7	0.71	13.2
	16	68.2	42.3	0.62	12.0	67.0	41.6	0.62	12.2	66.1	41.0	0.62	12.5	64.9	40.9	0.63	12.9	63.7	40.1	0.63	13.4
	17	70.5	38.8	0.55	12.1	69.2	38.1	0.55	12.3	68.2	37.5	0.55	12.6	67.0	36.9	0.55	13.0	65.7	36.2	0.55	13.5
22	15	65.9	54.0	0.82	11.9	64.8	53.1	0.82	12.0	63.8	53.0	0.83	12.3	62.7	52.1	0.83	12.7	61.6	51.7	0.84	13.2
	16	68.2	50.5	0.74	12.0	67.0	49.6	0.74	12.2	66.1	49.5	0.75	12.5	64.9	48.7	0.75	12.9	63.7	48.4	0.76	13.4
	17	70.5	46.5	0.66	12.1	69.2	45.7	0.66	12.3	68.2	45.0	0.66	12.6	67.0	44.9	0.67	13.0	65.7	44.0	0.67	13.5
	18	72.6	42.1	0.58	12.3	71.3	41.4	0.58	12.4	70.2	40.7	0.58	12.7	69.0	40.7	0.59	13.1	67.7	39.9	0.59	13.6
	19	75.0	38.2	0.51	12.5	73.6	37.6	0.51	12.6	72.5	37.0	0.51	12.9	71.2	37.0	0.52	13.3	69.8	36.3	0.52	13.8
24	16	68.2	58.0	0.85	12.0	67.0	57.0	0.85	12.2	66.1	56.8	0.86	12.5	64.9	56.5	0.87	12.9	63.7	56.0	0.88	13.4
	17	70.5	54.3	0.77	12.1	69.2	53.3	0.77	12.3	68.2	53.2	0.78	12.6	67.0	52.3	0.78	13.0	65.7	51.9	0.79	13.5
	18	72.6	50.1	0.69	12.3	71.3	49.2	0.69	12.4	70.2	49.2	0.70	12.7	69.0	48.3	0.70	13.1	67.7	48.0	0.71	13.6
	19	75.0	45.7	0.61	12.5	73.6	44.9	0.61	12.6	72.5	45.0	0.62	12.9	71.2	44.2	0.62	13.3	69.8	44.0	0.63	13.8
	20	77.3	41.8	0.54	12.6	76.0	41.0	0.54	12.7	74.8	40.4	0.54	13.0	73.4	40.4	0.55	13.5	72.0	39.6	0.55	14.0
	21	80.0	37.6	0.47	12.8	78.5	36.9	0.47	12.9	77.3	36.3	0.47	13.2	75.8	36.4	0.48	13.6	74.3	35.7	0.48	14.2
26	18	72.6	57.4	0.79	12.3	71.3	56.3	0.79	12.4	70.2	56.2	0.80	12.7	69.0	55.9	0.81	13.1	67.7	55.5	0.82	13.6
	19	75.0	53.2	0.71	12.5	73.6	52.3	0.71	12.6	72.5	52.2	0.72	12.9	71.2	51.3	0.72	13.3	69.8	51.0	0.73	13.8
	20	77.3	49.5	0.64	12.6	76.0	48.6	0.64	12.7	74.8	48.6	0.65	13.0	73.4	47.7	0.65	13.5	72.0	47.5	0.66	14.0
	21	80.0	45.6	0.57	12.8	78.5	44.8	0.57	12.9	77.3	44.8	0.58	13.2	75.8	44.0	0.58	13.6	74.3	43.9	0.59	14.2
	22	82.6	41.3	0.50	12.9	81.1	40.5	0.50	13.0	79.8	40.7	0.51	13.4	78.3	39.9	0.51	13.8	76.7	39.9	0.52	14.5
	23	85.3	37.5	0.44	13.1	83.7	36.8	0.44	13.2	82.4	36.3	0.44	13.5	80.8	36.4	0.45	14.0	79.2	35.6	0.45	14.7
28	19	75.0	60.7	0.81	12.5	73.6	59.6	0.81	12.6	72.5	59.5	0.82	12.9	71.2	59.1	0.83	13.3	69.8	58.6	0.84	13.8
	20	77.3	56.5	0.73	12.6	76.0	55.5	0.73	12.7	74.8	55.3	0.74	13.0	73.4	55.1	0.75	13.5	72.0	54.7	0.76	14.0
	21	80.0	52.8	0.66	12.8	78.5	51.8	0.66	12.9	77.3	51.8	0.67	13.2	75.8	51.6	0.68	13.6	74.3	51.3	0.69	14.2
	22	82.6	48.7	0.59	12.9	81.1	48.6	0.60	13.0	79.8	48.7	0.61	13.4	78.3	47.8	0.61	13.8	76.7	47.6	0.62	14.5
	23	85.3	45.2	0.53	13.1	83.7	44.4	0.53	13.2	82.4	44.5	0.54	13.5	80.8	43.6	0.54	14.0	79.2	43.6	0.55	14.7
	24	88.1	41.4	0.47	13.2	86.4	40.6	0.47	13.4	85.0	40.0	0.47	13.7	83.4	40.0	0.48	14.2	81.7	39.2	0.48	15.0
30	20	77.3	64.2	0.83	12.6	76.0	63.0	0.83	12.7	74.8	62.8	0.84	13.0	73.4	62.4	0.85	13.5	72.0	61.9	0.86	14.0
	21	80.0	60.8	0.76	12.8	78.5	59.7	0.76	12.9	77.3	59.5	0.77	13.2	75.8	58.4	0.77	13.6	74.3	58.0	0.78	14.2
	22	82.6	57.0	0.69	12.9	81.1	55.9	0.69	13.0	79.8	55.8	0.70	13.4	78.3	54.8	0.70	13.8	76.7	54.5	0.71	14.5
	23	85.3	52.9	0.62	13.1	83.7	51.9	0.62	13.2	82.4	51.9	0.63	13.5	80.8	50.9	0.63	14.0	79.2	50.7	0.64	14.7
	24	88.1	48.4	0.55	13.2	86.4	48.4	0.56	13.4	85.0	47.6	0.56	13.7	83.4	47.5	0.57	14.2	81.7	46.5	0.57	15.0

※Q; Cooling Capacity, SHC; Sensible Heat Capacity, W; Compressor Input

Total input = Compressor input + indoor fan motor input + outdoor fan motor input

Factor for Various Air Flow

Air Volume	CMM	170	180	200	220	240
	l/s	2830	3000	3330	3670	4000
Coolinr capacity		0.977	0.987	1.000	1.010	1.020
Compressor input		0.995	0.997	1.000	1.003	1.007

Heating Capacity (Standard Air Flow)

PRHG-20MYA

	OD WB°C													
	–15		–10		–5		0		5		10		15	
Indoor	Q	W	Q	W	Q	W	Q	W	Q	W	Q	W	Q	W
DB°C	kW	kW	kW	kW	kW	kW	kW	kW	kW	kW	kW	kW	kW	kW
15	36.1	9.1	41.2	9.9	46.9	10.9	53.5	12.2	60.9	13.5	69.4	15.2	78.8	17.0
16	35.7	9.1	40.9	9.9	46.7	11.0	53.3	12.3	60.6	13.7	69.1	15.4	78.5	17.2
17	35.3	9.2	40.6	10.0	46.5	11.1	53.1	12.4	60.4	13.8	68.8	15.6	78.2	17.4
18	35.1	9.3	40.4	10.1	46.3	11.2	52.8	12.5	60.2	14.0	68.5	15.7	77.9	17.6
19	34.9	9.4	40.2	10.2	46.1	11.3	52.6	12.6	60.0	14.1	68.3	15.9	77.6	17.8
20	34.7	9.4	40.0	10.3	45.9	11.4	52.4	12.7	59.8	14.2	68.0	16.0	77.3	18.0
21	34.5	9.4	39.8	10.3	45.7	11.5	52.2	12.8	59.6	14.4	67.8	16.2	77.0	18.2
22	34.3	9.4	39.6	10.3	45.5	11.6	52.0	12.9	59.4	14.5	67.6	16.3	76.6	18.4
23	34.1	9.5	39.4	10.4	45.3	11.7	51.8	13.1	59.2	14.6	67.3	16.5	76.3	18.6
24	33.9	9.6	39.2	10.5	45.1	11.8	51.6	13.2	59.0	14.8	67.0	16.7	76.0	18.9
25	33.9	9.6	39.1	10.5	44.9	11.8	51.4	13.2	58.7	14.9	66.7	16.8	75.6	19.1
26	33.7	9.7	38.9	10.6	44.7	11.9	51.2	13.3	58.4	15.1	66.4	17.0	75.3	19.3
27	33.4	9.8	38.6	10.7	44.4	12.0	50.9	13.4	58.1	15.2	66.1	17.2	75.0	19.5

※Q; Heating Capacity, W; Compressor Input

Factor for Various Air Flow

Air Volume	CMM	170	180	200	220	240
	l/s	2830	3000	3330	3670	4000
Heating capacity		0.985	0.993	1.000	1.007	1.015
Compressor input		1.020	1.013	1.000	0.987	0.974

Indoor fan input

PRHG8

Total SP (Pa)		CMM	80	85	90	95
		L/S	1330	1420	1500	1580
200	fan speed	rpm	967	1036	1036	1036
	Indoor fan input	kW	1.20	1.27	1.27	1.27
300	fan speed	rpm	1139	1139	1208	1208
	Indoor fan input	kW	1.80	1.80	2.02	2.02
400	fan speed	rpm	1305	1329	1329	–
	Indoor fan input	kW	2.42	2.56	2.56	

PRHG10

Total SP (Pa)		CMM	90	100	110	120
		L/S	1500	1660	1830	2000
250	fan speed	rpm	1088	1088	1139	1139
	Indoor fan input	kW	1.90	1.90	2.16	2.16
350	fan speed	rpm	1208	1208	1318	1318
	Indoor fan input	kW	2.26	2.26	2.86	2.86
450	fan speed	rpm	1450	1450	1450	–
	Indoor fan input	kW	3.13	3.13	3.13	
550	fan speed	rpm	1595	–	–	–
	Indoor fan input	kW	3.96			

PRHG15

Total SP (Pa)		CMM	120	130	140	150	160	170	180
		L/S	2000	2170	2330	2500	2670	2830	3000
200	fan speed	rpm	659	659	659	659	659	659	659
	Indoor fan input	kW	1.58	1.68	1.79	1.89	1.99	2.1	2.21
300	fan speed	rpm	791	791	791	791	791	791	791
	Indoor fan input	kW	1.95	2.08	2.21	2.34	2.47	2.6	2.73
400	fan speed	rpm	886	886	886	906	906	906	906
	Indoor fan input	kW	2.27	2.43	2.58	2.83	2.99	3.15	3.31
500	fan speed	rpm	997	997	997	997	997	997	997
	Indoor fan input	kW	2.72	2.93	3.13	3.34	3.54	3.75	3.96
600	fan speed	rpm	1088	1088	1088	–	–	–	–
	Indoor fan input	kW	3.07	3.3	3.52				

PRHG20

Total SP (Pa)		CMM	170	180	190	200
		L/S	2830	3000	3170	3330
300	fan speed	rpm	798	798	798	798
	Indoor fan input	kW	2.98	3.06	3.14	3.23
400	fan speed	rpm	906	906	906	906
	Indoor fan input	kW	3.50	3.66	3.82	3.98
500	fan speed	rpm	997	997	997	997
	Indoor fan input	kW	3.97	4.17	4.37	4.56
600	fan speed	rpm	1088	1088	1088	1088
	Indoor fan input	kW	4.44	4.66	4.89	5.11
700	fan speed	rpm	1208	1208	1208	1208
	Indoor fan input	kW	5.03	5.27	5.51	5.75

OPERATION RANGE

The range of working temperatures is as below.
Make sure which unit you are using and confirm the range of application.

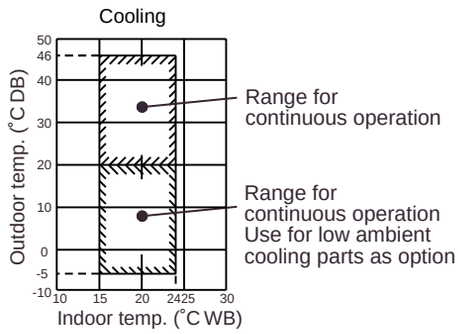

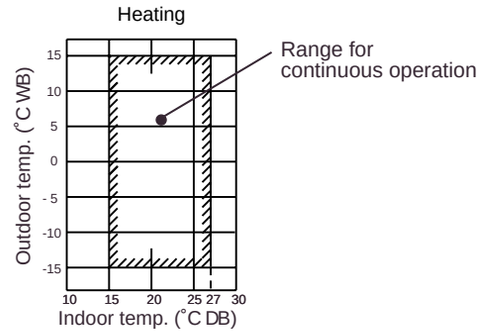

(Note)
As an applicable humidity outside standard for both indoors and outdoors,
we recommend use within a range of 35-80% relative humidity.
However, it is a condition that there is no be dewy in surfaces of electric parts.

⚠ Caution:

The use of your air conditioner outside the range of working temperature and humidity can result in serious failure.

FAN PERFORMANCE

PRHG-8MYA

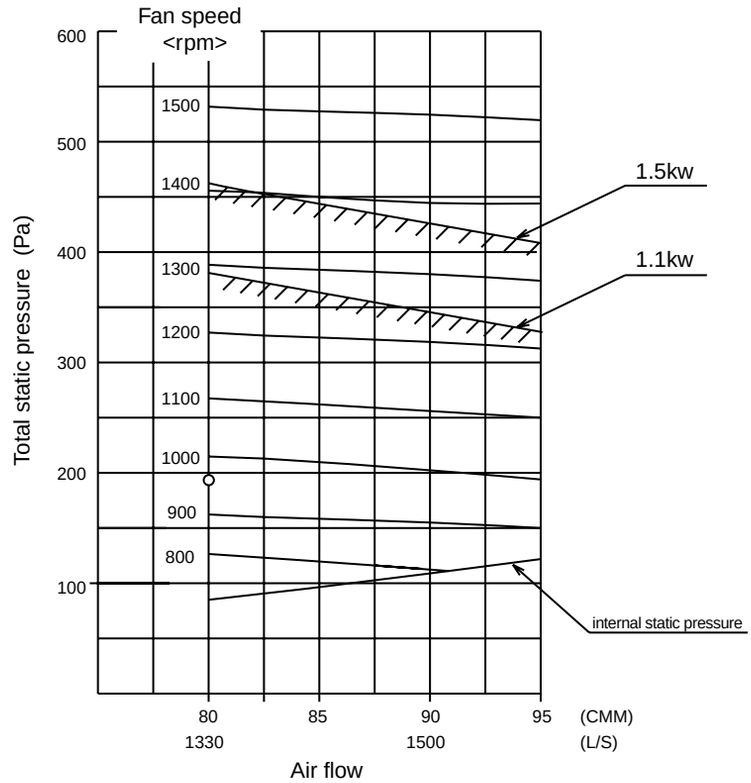

* o: factory pre setting ESP = 100 Pa

PRHG-10MYA

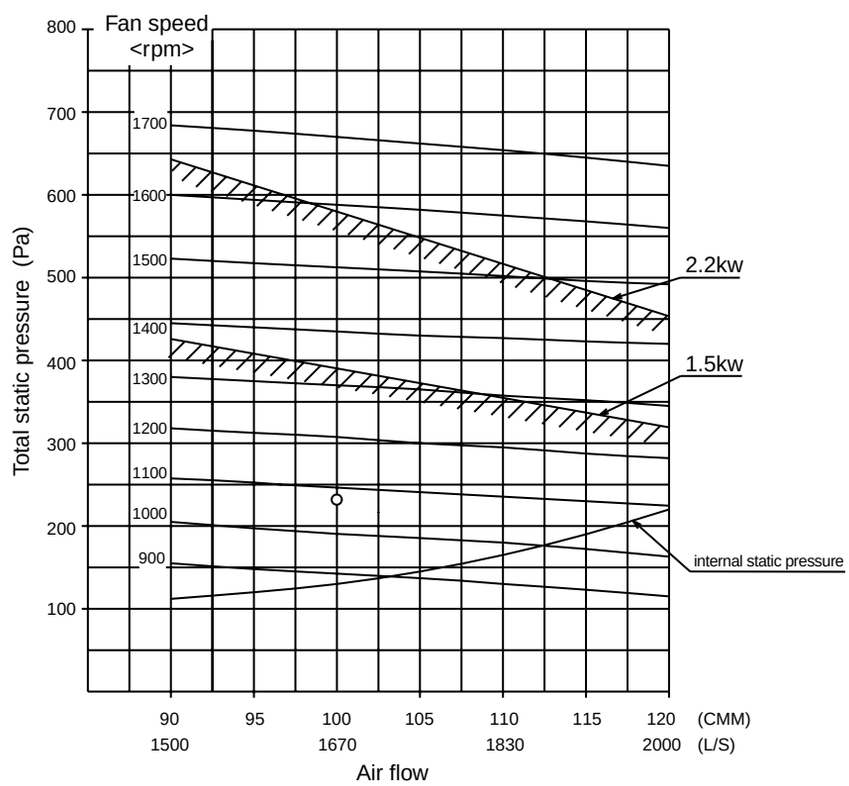

* o: factory pre setting ESP = 100 Pa

PRHG-15MYA

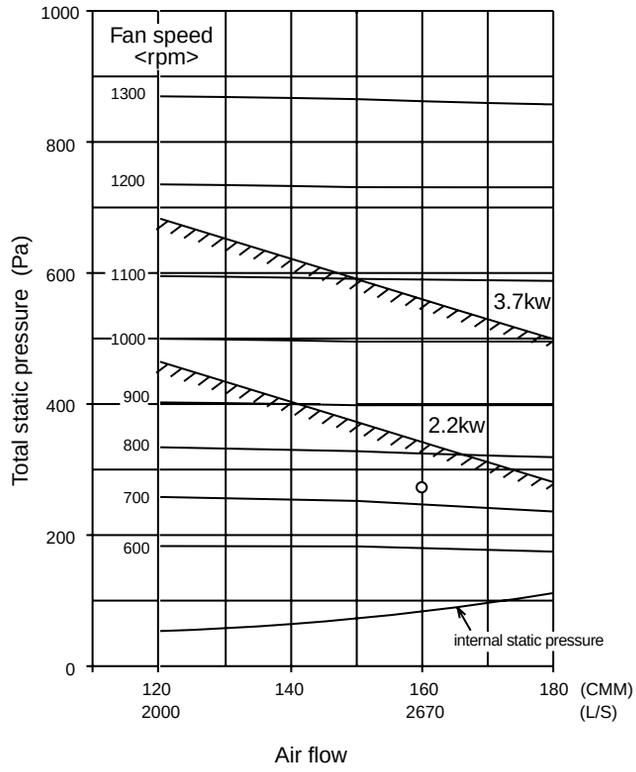

* ○: factory pre setting ESP = 200 Pa

PRHG-20MYA

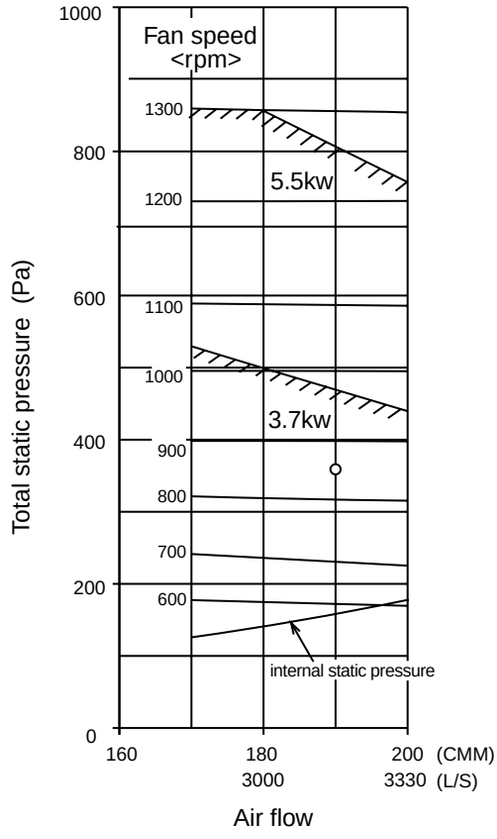

* ○: factory pre setting ESP = 200 Pa

PRHG-8MYA

※ factory pre setting

Total SP (Pa)	Air flow	CMM	80	85	90	95
		L/S	1330	1420	1500	1580
200	Fan speed	rpm	967	1036	1036	1036
	Pulley size	mm	101.6	127	127	127
	(Motor side)	inch	4	5	5	5
	Pulley size	mm	152.4	177.8	177.8	177.8
	(Fan side)	inch	6	7	7	7
	Belt size	inch	B30	B34	B34	B34
	Motor	kW	1.1	1.1	1.1	1.1
300	Fan speed	rpm	1139	1139	1208	1208
	Pulley size	mm	139.7	139.7	127	127
	(Motor side)	inch	5.5	5.5	5	5
	Pulley size	mm	177.8	177.8	152.4	152.4
	(Fan side)	inch	7	7	6	6
	Belt size	inch	B34	B34	B32	B32
	Motor	kW	1.1	1.1	1.1	1.1
400	Fan speed	rpm	1305	1329	1329	—
	Pulley size	mm	114.3	139.7	139.7	—
	(Motor side)	inch	4.5	5.5	5.5	—
	Pulley size	mm	127	152.4	152.4	—
	(Fan side)	inch	5	6	6	—
	Belt size	inch	B33	B33	B33	—
	Motor	kW	1.5	1.5	1.5	—

PRHG-10MYA

※ factory pre setting

Total SP (Pa)	Air flow	CMM	90	100	110	120
		L/S	1500	1660	1830	2000
250	Fan speed	rpm	1088	1088	1139	1139
	Pulley size	mm	114.3	114.3	139.7	137.7
	(Motor side)	inch	4.5	4.5	5.5	5.5
	Pulley size	mm	152.4	152.4	177.8	177.8
	(Fan side)	inch	6	6	7	7
	Belt size	inch	B31	B31	B34	B34
	Motor	kW	1.5	1.5	1.5	1.5
350	Fan speed	rpm	1208	1208	1318	1318
	Pulley size	mm	127	127	127	127
	(Motor side)	inch	5	5	5	5
	Pulley size	mm	152.4	152.4	139.7	139.7
	(Fan side)	inch	6	6	5.5	5.5
	Belt size	inch	B32	B32	B31	B31
	Motor	kW	1.5	1.5	2.2	2.2
450	Fan speed	rpm	1450	1450	1450	—
	Pulley size	mm	127	127	127	—
	(Motor side)	inch	5	5	5	—
	Pulley size	mm	127	127	127	—
	(Fan side)	inch	5	5	5	—
	Belt size	inch	B30	B30	B30	—
	Motor	kW	1.5	2.2	2.2	—
550	Fan speed	rpm	1595	—	—	—
	Pulley size	mm	139.7	—	—	—
	(Motor side)	inch	5.5	—	—	—
	Pulley size	mm	127	—	—	—
	(Fan side)	inch	5	—	—	—
	Belt size	inch	B31	—	—	—
	Motor	kW	2.2	—	—	—

PRHG-15MYA

※ factory pre setting

Total SP (Pa) \ Air flow		CMM	120	130	140	150	160	170	180
		L/S	2000	2170	2330	2500	2670	2830	3000
200	Fan speed	rpm	659	659	659	659	659	659	659
	Pulley size (Motor side)	mm	127	127	127	127	127	127	127
		inch	5	5	5	5	5	5	5
	Pulley size (Fan side)	mm	279.4	279.4	279.4	279.4	279.4	279.4	279.4
		inch	11	11	11	11	11	11	11
	Belt size	inch	B44X2	B44X2	B44X2	B44X2	B44X2	B44X2	B44X2
	Motor	kW	2.2	2.2	2.2	2.2	2.2	2.2	2.2
300	Fan speed	rpm	791	791	791	791	791	791	791
	Pulley size (Motor side)	mm	152.4	152.4	152.4	152.4	152.4	152.4	152.4
		inch	6	6	6	6	6	6	6
	Pulley size (Fan side)	mm	279.4	279.4	279.4	279.4	279.4	279.4	279.4
		inch	11	11	11	11	11	11	11
	Belt size	inch	B45X2	B45X2	B45X2	B45X2	B45X2	B45X2	B45X2
	Motor	kW	2.2	2.2	2.2	2.2	2.2	3.7	3.7
400	Fan speed	rpm	886	886	886	906	906	906	906
	Pulley size (Motor side)	mm	139.7	139.7	139.7	127	127	127	127
		inch	5.5	5.5	5.5	5	5	5	5
	Pulley size (Fan side)	mm	228.6	228.6	228.6	203.2	203.2	203.2	203.2
		inch	9	9	9	8	8	8	8
	Belt size	inch	B41X2	B41X2	B41X2	B38X2	B38X2	B38X2	B38X2
	Motor	kW	2.2	2.2	2.2	3.7	3.7	3.7	3.7
500	Fan speed	rpm	997	997	997	997	997	997	997
	Pulley size (Motor side)	mm	139.7	139.7	139.7	139.7	139.7	139.7	139.7
		inch	5.5	5.5	5.5	5.5	5.5	5.5	5.5
	Pulley size (Fan side)	mm	203.2	203.2	203.2	203.2	203.2	203.2	203.2
		inch	8	8	8	8	8	8	8
	Belt size	inch	B39X2	B39X2	B39X2	B39X2	B39X2	B39X2	B39X2
	Motor	kW	3.7	3.7	3.7	3.7	3.7	3.7	3.7
600	Fan speed	rpm	1088	1088	1088	—	—	—	—
	Pulley size (Motor side)	mm	152.4	152.4	152.4	—	—	—	—
		inch	6	6	6	—	—	—	—
	Pulley size (Fan side)	mm	203.2	203.2	203.2	—	—	—	—
		inch	8	8	8	—	—	—	—
	Belt size	inch	B40X2	B40X2	B40X2	—	—	—	—
	Motor	kW	3.7	3.7	3.7	—	—	—	—

PRHG-20MYA

※ factory pre setting

Total SP (Pa) \ Air flow		CMM	170	180	190	200
		L/S	2830	3000	3170	3330
300	Fan speed	rpm	798	798	798	798
	Pulley size (Motor side)	mm	139.7	139.7	139.7	139.7
		inch	5.5	5.5	5.5	5.5
	Pulley size (Fan side)	mm	254	254	254	254
		inch	10	10	10	10
	Belt size	inch	B42X2	B42X2	B42X2	B42X2
	Motor	kW	3.7	3.7	3.7	3.7
400	Fan speed	rpm	906	906	906	906
	Pulley size (Motor side)	mm	127	127	127	127
		inch	5	5	5	5
	Pulley size (Fan side)	mm	203.2	203.2	203.2	203.2
		inch	8	8	8	8
	Belt size	inch	B38X2	B38X2	B38X2	B38X2
	Motor	kW	3.7	3.7	3.7	3.7
500	Fan speed	rpm	997	997	997	997
	Pulley size (Motor side)	mm	139.7	139.7	139.7	139.7
		inch	5.5	5.5	5.5	5.5
	Pulley size (Fan side)	mm	203.2	203.2	203.2	203.2
		inch	8	8	8	8
	Belt size	inch	B39X2	B39X2	B39X2	B39X2
	Motor	kW	3.7	3.7	3.7	3.7
600	Fan speed	rpm	1088	1088	1088	1088
	Pulley size (Motor side)	mm	152.4	152.4	152.4	152.4
		inch	6	6	6	6
	Pulley size (Fan side)	mm	203.2	203.2	203.2	203.2
		inch	8	8	8	8
	Belt size	inch	B40X2	B40X2	B40X2	B40X2
	Motor	kW	5.5	5.5	5.5	5.5
700	Fan speed	rpm	1208	1208	1208	1208
	Pulley size (Motor side)	mm	127	127	127	127
		inch	5	5	5	5
	Pulley size (Fan side)	mm	152.4	152.4	152.4	152.4
		inch	6	6	6	6
	Belt size	inch	B35X2	B35X2	B35X2	B35X2
	Motor	kW	5.5	5.5	5.5	5.5

Pulley outside dimensions are shown below: (Unit : mm)

(1) Shape of belt groove

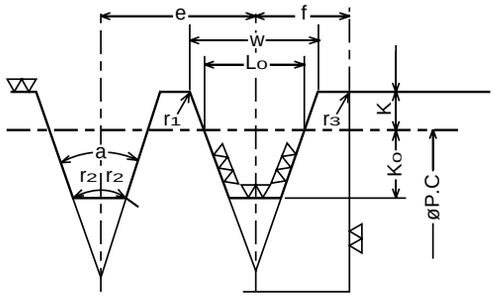

Shape of V-belt	Nominal Dia. øP.C	a (°)	W	Lo	K	Ko	e	f	r1	r2	r3	V-belt thickness (Reference)
B	Over 125 Under 160	34	15.86	12.5	5.5	9.5	19.0	12.5	0.2~0.5	0.5~1.0	1~2	11
	Over 160 Under 200	36	16.07									
	Over 200	38	16.29									

Sectional plan of V-belt

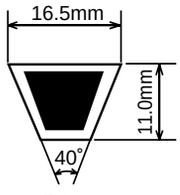

B type

(2) Shape of motor pulley boss (Unit : mm)

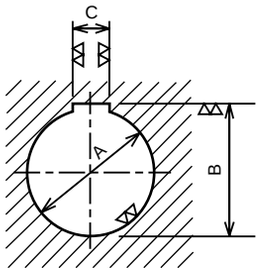

MOTOR CAPACITY (kW)	A	B	C
1.1, 1.5	$\phi 24^{+0.028}_{+0.007}$	$27^{+0.128}_{+0.007}$	$8^{+0.018}_{-0.018}$
2.2, 3.7	$\phi 28^{+0.028}_{+0.007}$	$31^{+0.128}_{+0.007}$	$8^{+0.028}_{-0.013}$
5.5	$\phi 38^{+0.028}_{+0.007}$	$41^{+0.128}_{+0.009}$	$10^{+0.028}_{-0.013}$

NC CURVES

PRHG-8MYA

50Hz Sound pressure levels (SPL)

Condition	SPL dB(A)	63Hz	125Hz	250Hz	500Hz	1000Hz	2000Hz	4000Hz	8000Hz
Cooling & Heating	66.0	71.5	73.0	65.0	64.0	60.5	55.5	48.5	43.5

(dB)

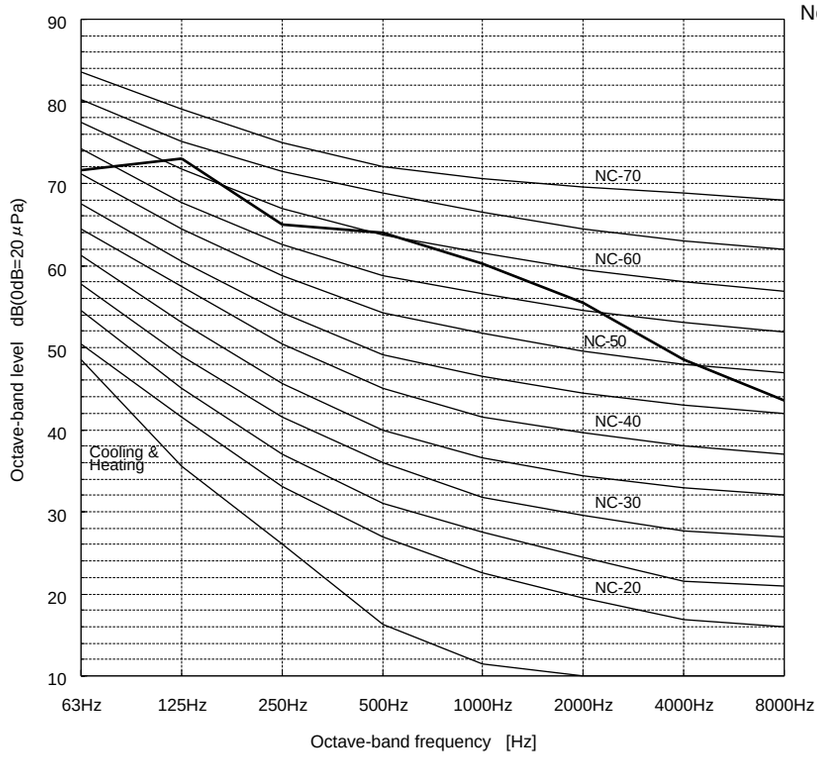

Note. The measuring point is 1m from the comp.service panel.

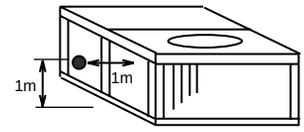

measuring place : dead room

PRHG-10MYA

50Hz Sound pressure levels (SPL)

Condition	SPL dB(A)	63Hz	125Hz	250Hz	500Hz	1000Hz	2000Hz	4000Hz	8000Hz
Cooling & Heating	66.0	73.5	71.5	70.0	63.5	59.0	53.5	47.0	45.0

(dB)

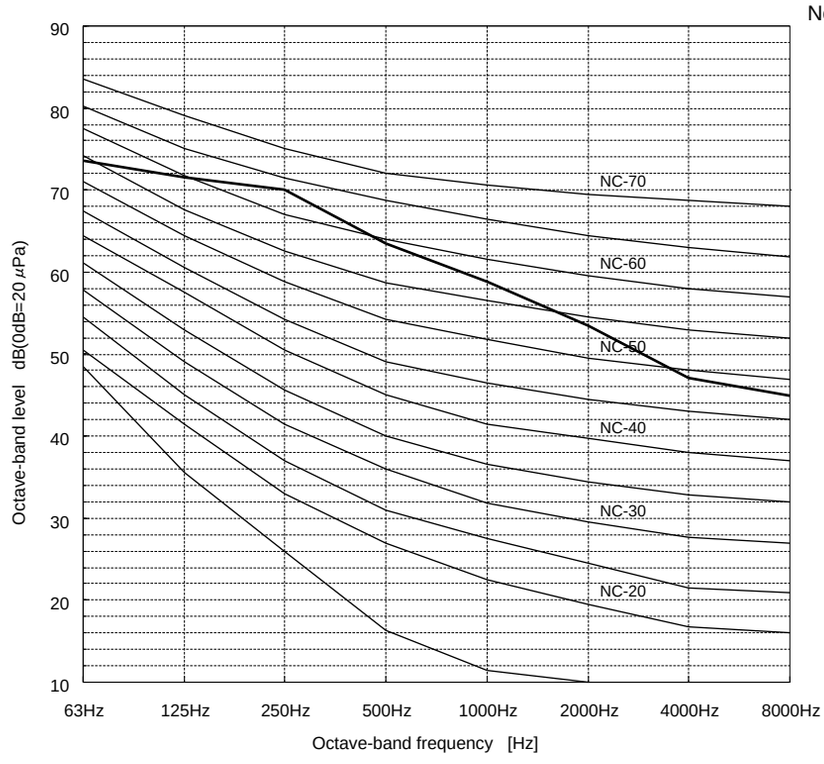

Note. The measuring point is 1m from the comp.service panel.

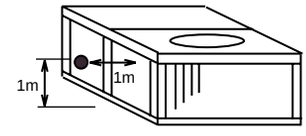

measuring place : dead room

PRHG-15MYA

50Hz Sound pressure levels (SPL)

Condition	SPL dB(A)	63Hz	125Hz	250Hz	500Hz	1000Hz	2000Hz	4000Hz	8000Hz
Cooling & Heating	70.0	71.5	77.0	69.0	66.5	65.5	60.0	53.5	50.5

(dB)

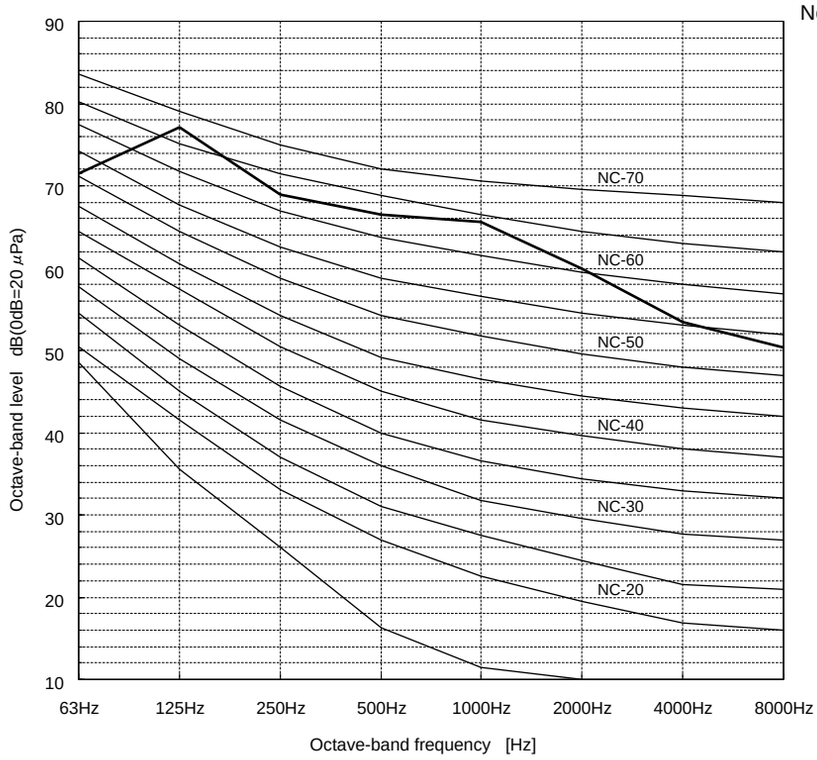

Note. The measuring point is 1m from the comp.service panel.

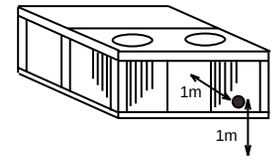

measuring place : dead room

PRHG-20MYA

50Hz Sound pressure levels (SPL)

Condition	SPL dB(A)	63Hz	125Hz	250Hz	500Hz	1000Hz	2000Hz	4000Hz	8000Hz
Cooling & Heating	70.0	75.5	75.0	71.5	68.5	64.0	58.5	49.0	45.5

(dB)

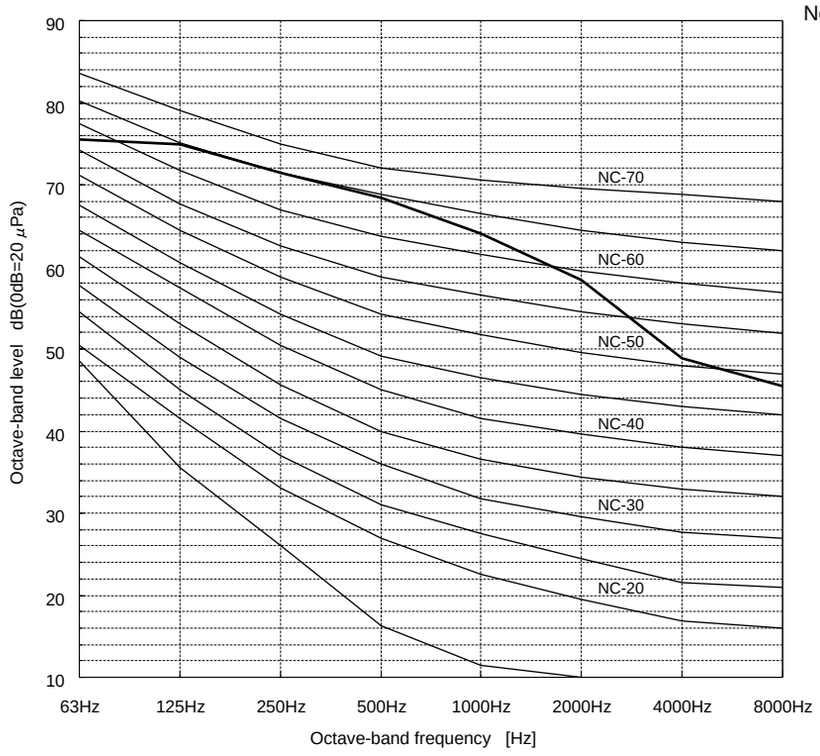

Note. The measuring point is 1m from the comp.service panel.

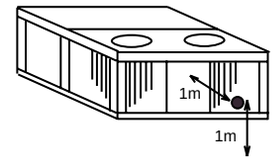

measuring place : dead room

OUTLINE DIMENSIONS

PRHG-8, 10

(side flow)

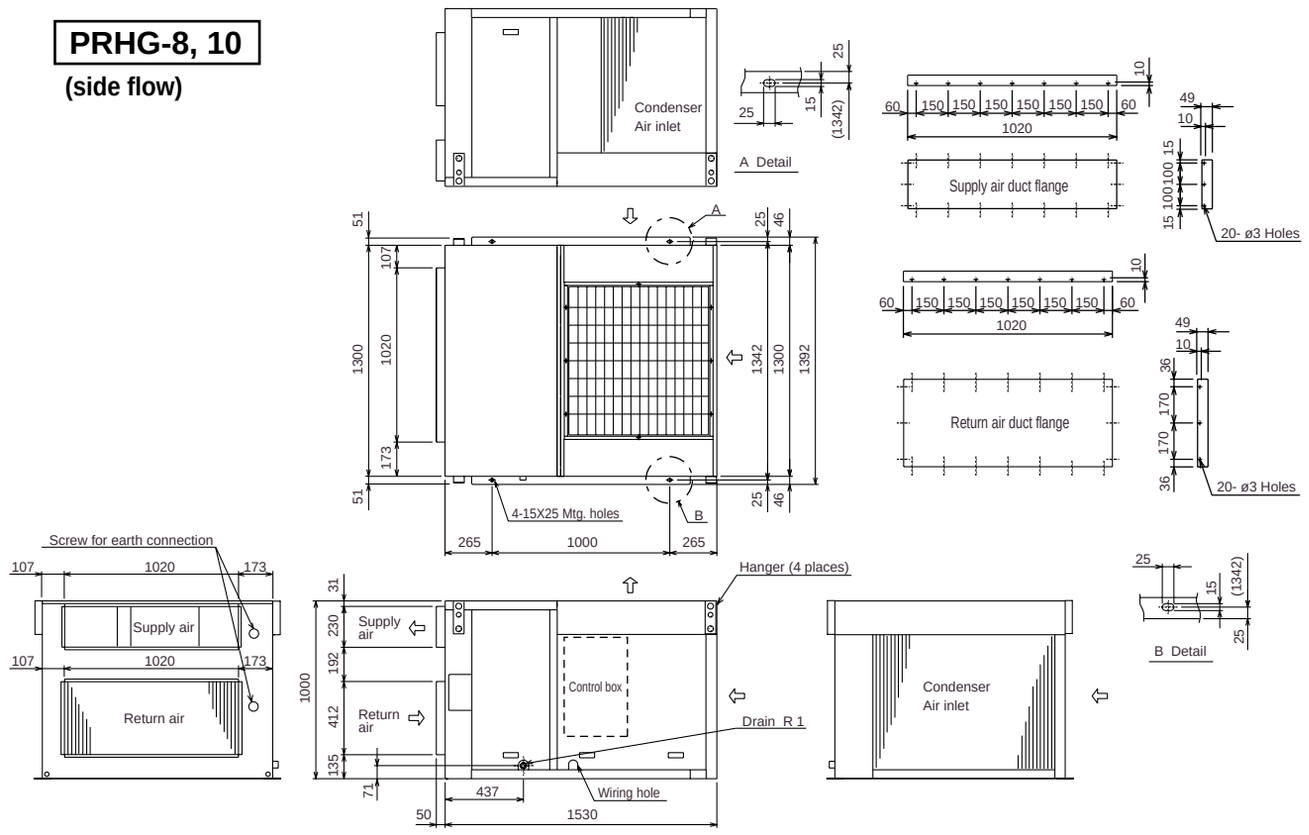

(down flow)

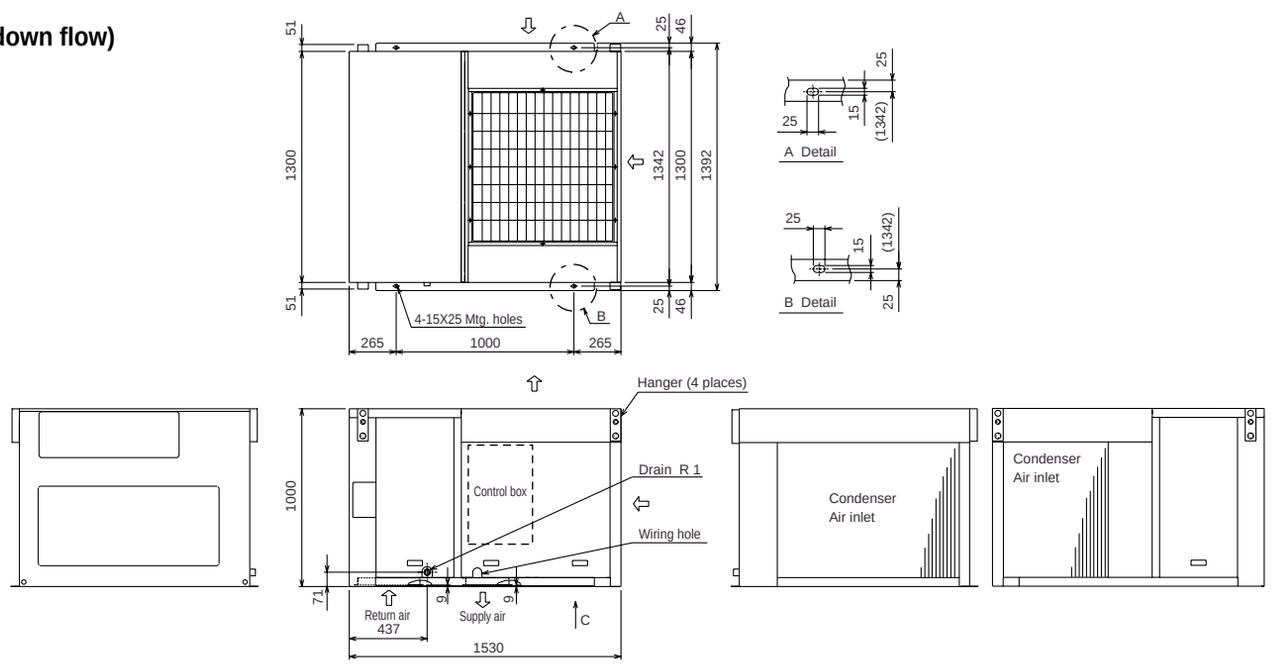

※ Screw is accessory parts.
Accessory parts is attached on control box cover.

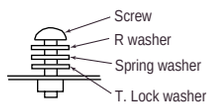

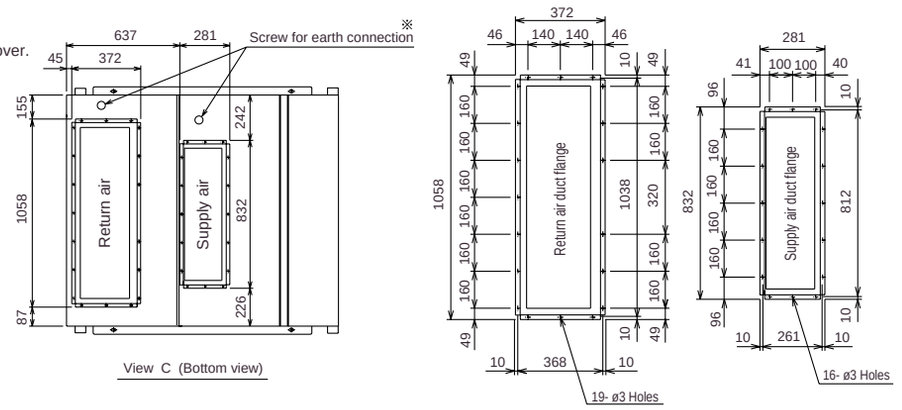

PRHG-15, 20

(side flow)

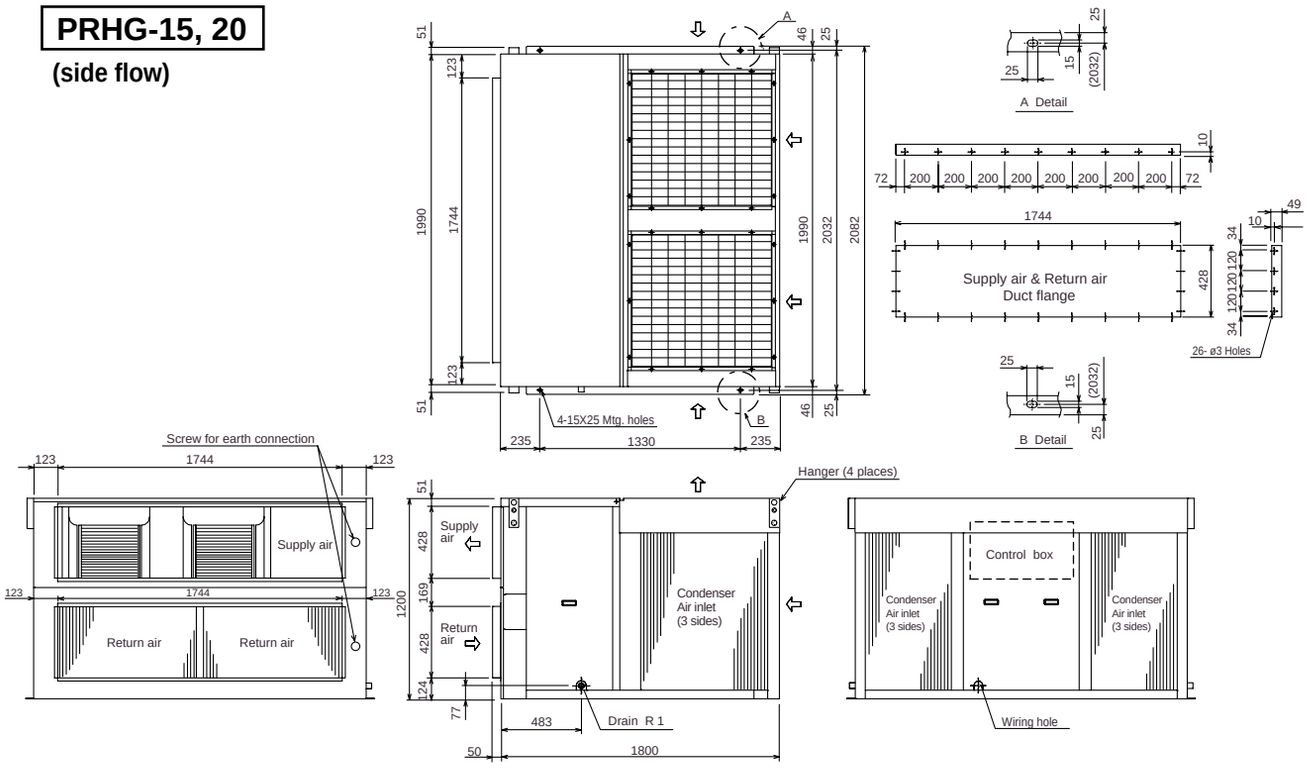

(down flow)

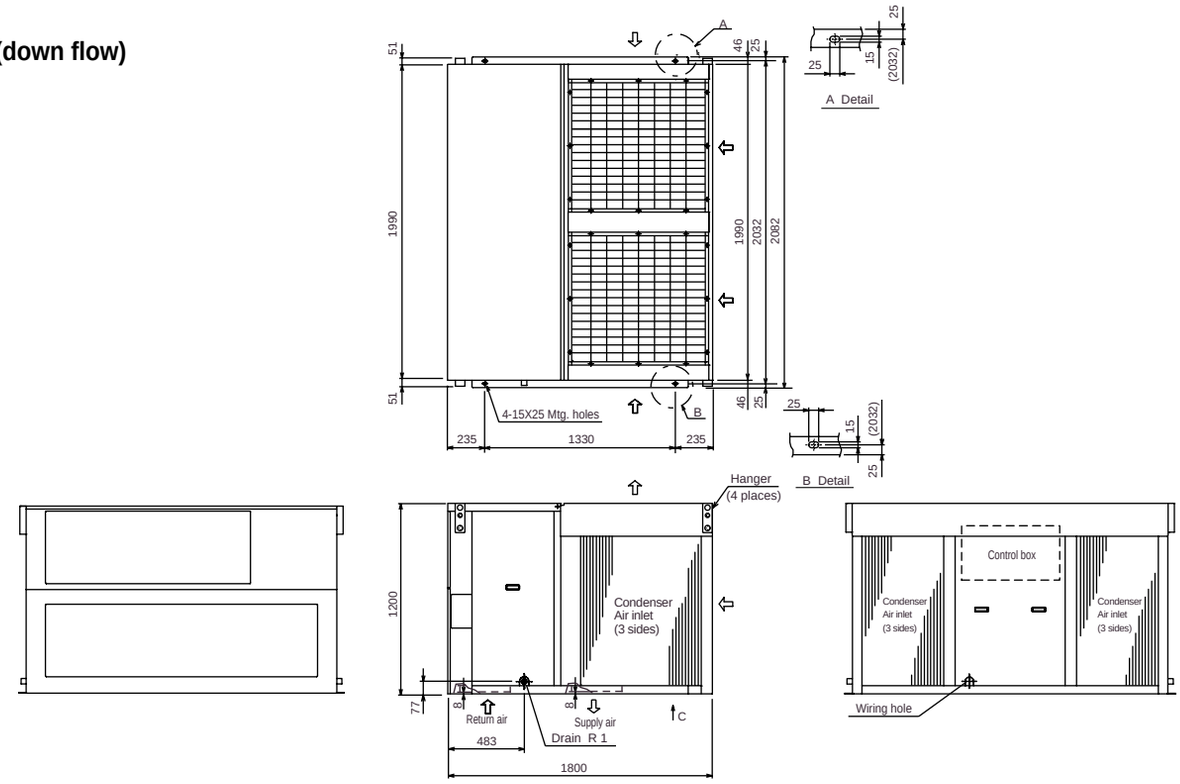

※ Screw is accessory parts.
Accessory parts is attached on control box cover.

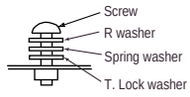

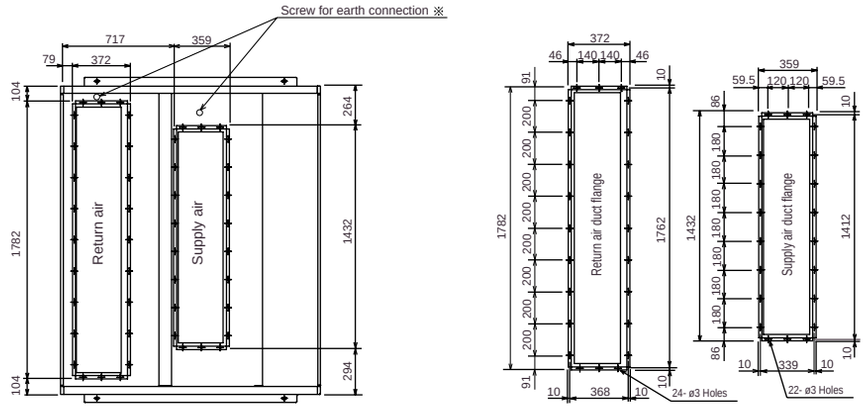

WIRING DIAGRAMS

PRHG-8MYA
PRHG-10MYA
(STANDARD)

Symbol	Name	Symbol	Name	Symbol	Name
MC	Compressor motor	51F1,2	Over current relay(fanI/D,O/D)	T1,2	Timer (defrost)
MF1	Fan motor (indoor)	CR1,2	Surge killer	21S4	4-Way valve
MF2	Fan motor (outdoor)	63H	High-pressure switch	C03,04,05 11~15	Connector
52C	Contactor (compressor)	FZ	Auxiliary relay (fan)		
52F	Contactor (fan I/D)	CZ	Auxiliary relay (compressor)	X1	Contactor (defrost)
TB1~3	Terminal block	30CZ,30FZ	Auxiliary relay (check)	X2	Auxiliary relay (defrost)
F1,F2	Fuse (3.15A)	49F	Internal thermostat (fan O/D)	26D	Thermostat (defrost)
Tr	Transformer	49C	Internal thermostat (compressor)	HZ	Auxiliary relay (4-way valve)
51C	Over current relay(compressor)	CH	Crankcase heater	SV	Solenoid valve

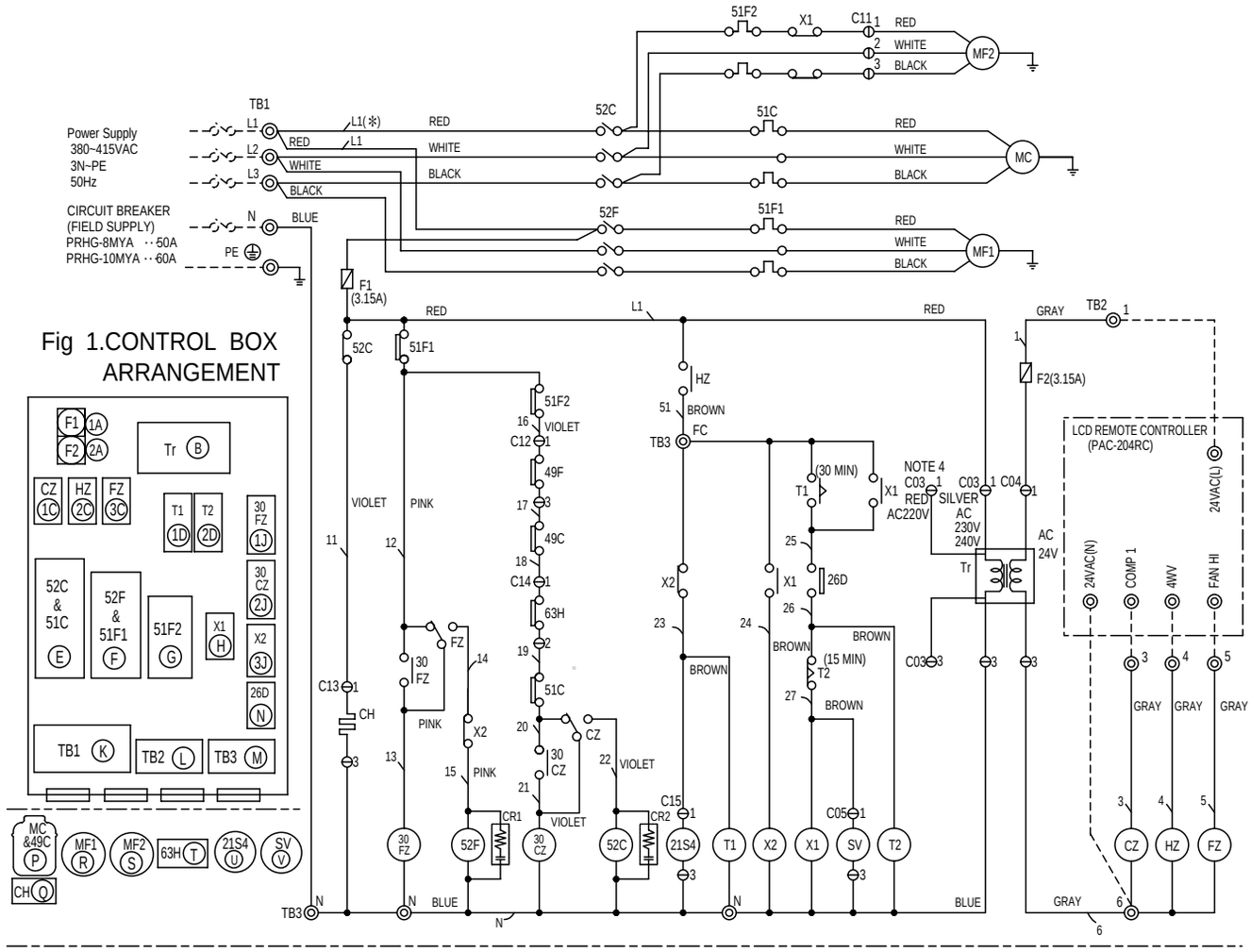

Fig 1.CONTROL BOX ARRANGEMENT

Note
1.The dotted lines show field wiring.
2.The figure in the parenthesis show field supply parts.
3.Color of earth wire is yellow and green twisting.
4.If the power supply is 380VAC, Change the “C03” connector with silver color tape to red color tape.
5.Refer below example about wiring mark.
6.Specification subject to change without notice.

Caution,
1.To protect each fan motors and compressor from abnormal current, Over current relays <51C>,<51F1,2> are installed. Therefore, Do not change factory set value of over current relays.
2.Do not change factory set value of all timers.

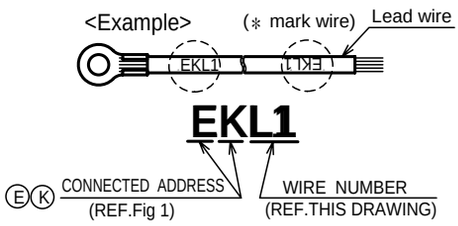

Controller connection.

Symbol	No.	Function	PAC-204RC terminal no.
TB2	1	Power (Active)	24VAC(L)
	3	Cooling or Heating operation	COMP1
	4	Reversing valve for Heating operation	4WV
	5	Fan operation	FAN HI
	6	Power (Neutral)	24VAC(N)

PRHG-15MYA
PRHG-20MYA
(STANDARD)

Symbol	Name	Symbol	Name
MC1,2	Compressor motor	TCZ	Timer
MF1	Fan motor (indoor)	49F1,2	Internal thermostat (fan O/D)
MF2,3	Fan motor (outdoor)		
52C1,2	Contactor (compressor)	49C1,2	Internal thermostat (compressor)
52F	Contactor (fan I/D)		
TB1~3	Terminal block	CH1,2	Crankcase heater
F1,F2	Fuse (3.15A)	X1,2	Contactor (defrost)
Tr	Transformer	X3,4	Auxiliary relay (defrost)
51C1,2	Over current relay (compressor)	21S41,2	4-Way valve
		HZ	Auxiliary relay (4-Way-valve)
51F1	Over current relay(fan I/D)		
51F2,3	Over current relay(fan O/D)	T1~4	Timer (defrost)
63H1,2	High-pressure switch	26D1,2	Thermostat (defrost)
FZ	Auxiliary relay (fan)	C03,04, 11~15, 21~25	Connector
CZ	Auxiliary relay (compressor)		
30CZ1,2	Auxiliary relay (check)		
30FZ	Auxiliary relay (check)	CR1~3	Surge killer

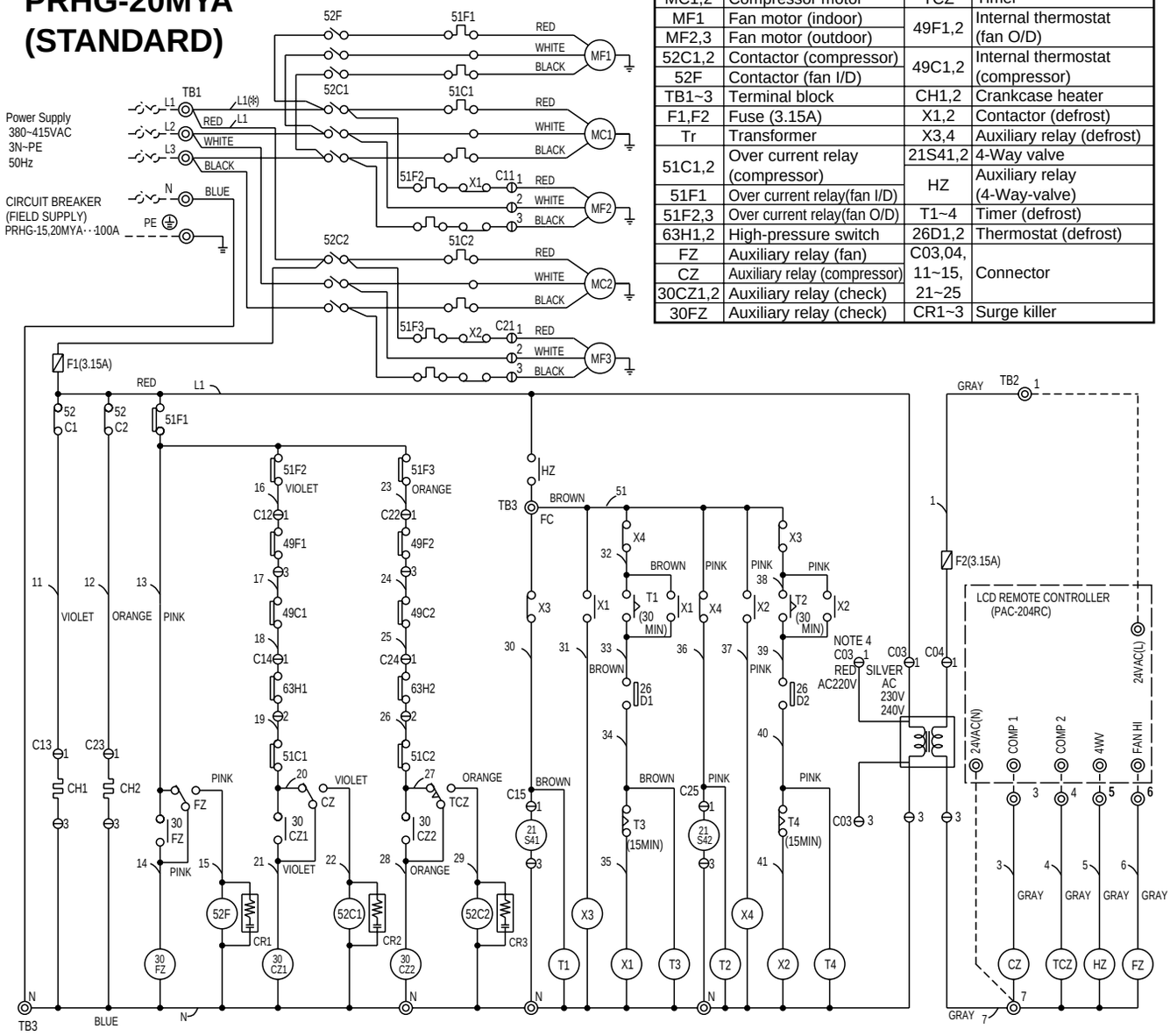

Fig 1.CONTROL BOX ARRANGEMENT

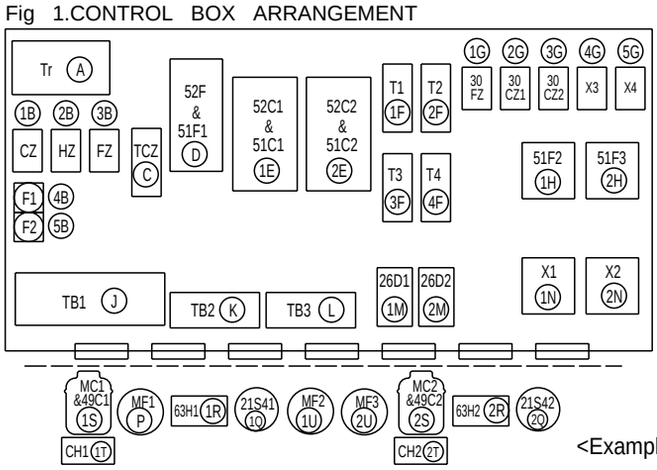

Caution,
1. To protect each fan motor and compressor from abnormal current, Over current relays<51C1,2>, <51F1~3>are installed. Therefore, Do not change factory set value of over current relays.
2. Do not change factory set value of all timers.
3. This timer <TCZ> installed because the power supply breaker may operate if two compressors start at the same time.

Controller connection.

Symbol	No.	Function	PAC-204RC terminal no.
TB2	1	Power (Active)	24VAC(L)
	3	Cooling or Heating operation	COMP1
	4	Cooling or Heating operation	COMP2
	5	Reversing valve for Heating operation	4WV
	6	Fan operation	FAN HI
	7	Power (Neutral)	24VAC(N)

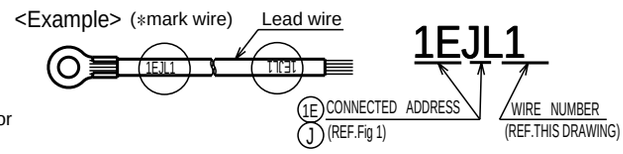

Note:1. The dotted lines show field wiring.
2. The figure in the parenthesis show field supply parts.
3. Color of earth wire is yellow and green twisting.
4. If the power supply is 380VAC, Change the "C03" connector with silver color tape to red color tape.
5. Refer right example about wiring mark.
6. Specification subject to change without notice.

PRHG-8MYA
PRHG-10MYA
(Use for Low ambient cooling parts <option>)

Symbol	Name	Symbol	Name	Symbol	Name
MC	Compressor motor	CR1,2	Surge killer	21S4	4-Way valve
MF1	Fan motor (indoor)	63H	High-pressure switch	C03,04,05 11~15	Connector
MF2	Fan motor (outdoor)	FZ	Auxiliary relay (fan)		
52C	Contactor (compressor)	CZ	Auxiliary relay (compressor)	X1	Contactor (defrost)
52F	Contactor (fan I/D)	30CZ,30FZ	Auxiliary relay (check)	X2	Auxiliary relay (defrost)
TB1~3	Terminal block	<TH>	Thermistor	26D	Thermostat (defrost)
F1,F2	Fuse (3.15A)	49F	Internal thermostat (fan O/D)	HZ	Auxiliary relay (4-way valve)
Tr	Transformer	49C	Internal thermostat (compressor)	SV	Solenoid valve
51C	Over current relay(compressor)	CH	Crankcase heater		
51F1,2	Over current relay(fanI/D,O/D)	T1,2	Timer (defrost)		

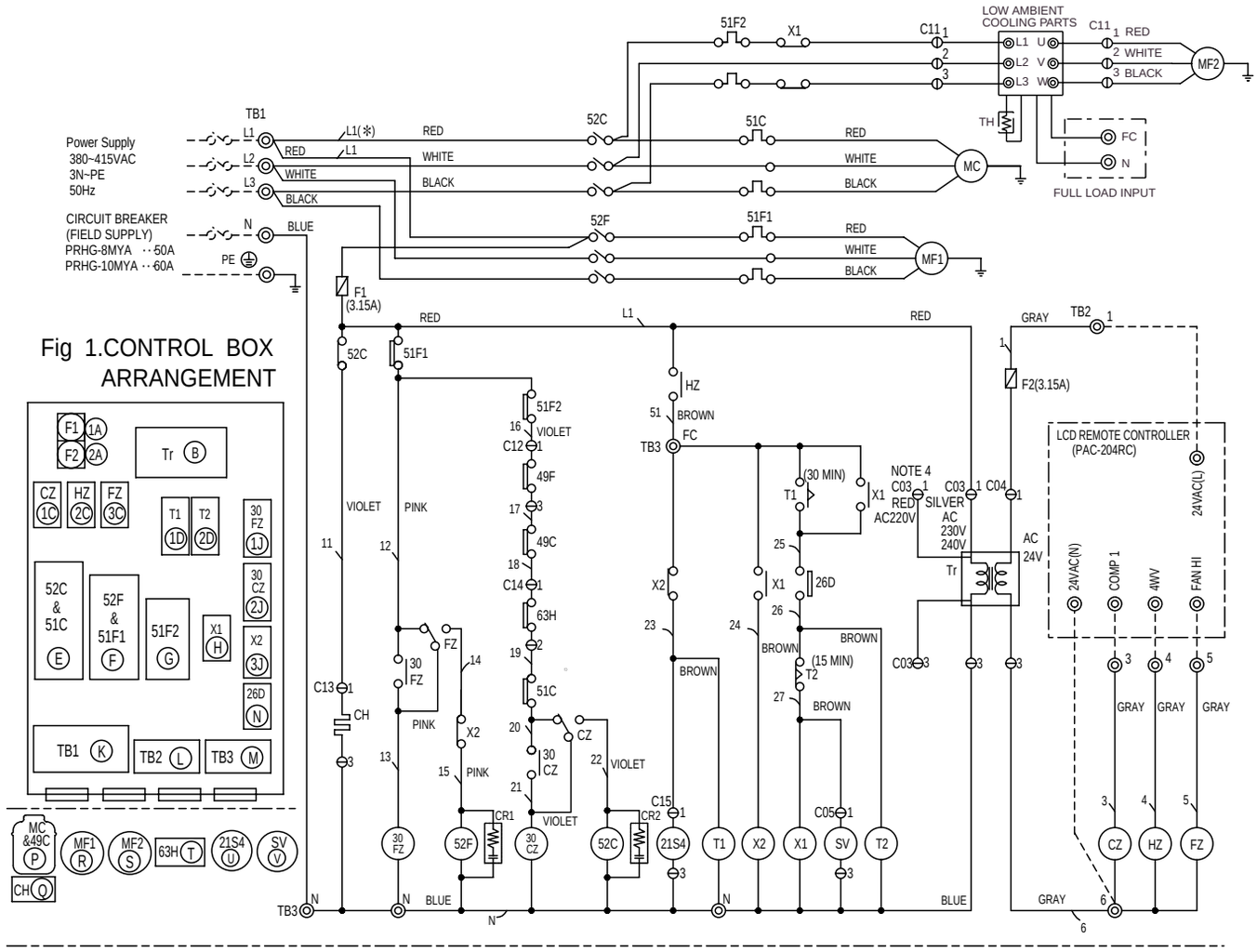

Note
1.The dotted lines show field wiring.
2.The figure in the parenthesis show field supply parts.
3.Color of earth wire is yellow and green twisting.
4.If the power supply is 380VAC, Change the "C03" connector with silver color tape to red color tape.
5.Refer below example about wiring mark.
6.Specification subject to change without notice.

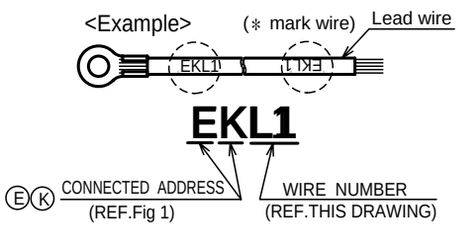

Caution,
1.To protect each fan motors and compressor from abnormal current, Over current relays <51C>,<51F1,2> are installed. Therefore, Do not change factory set value of over current relays.
2.Do not change factory set value of all timers.

Controller connection.

Symbol	No.	Function	PAC-204RC terminal no.
TB2	1	Power (Active)	24VAC(L)
	3	Cooling or Heating operation	COMP1
	4	Reversing valve for Heating operation	4WV
	5	Fan operation	FAN HI
	6	Power (Neutral)	24VAC(N)

PRHG-15MYA
PRHG-20MYA
(Use for Low ambient cooling parts <option>)

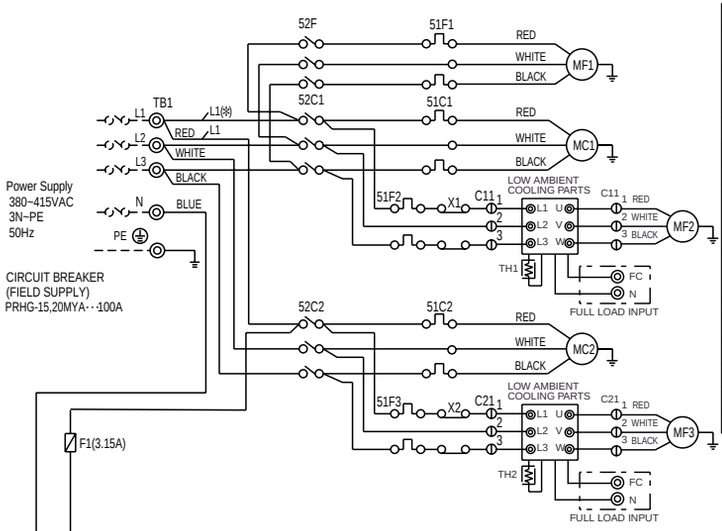

Symbol	Name	Symbol	Name
MC1,2	Compressor motor	49F1,2	Internal thermostat (fan O/D)
MF1	Fan motor (indoor)		
MF2,3	Fan motor (outdoor)	49C1,2	Internal thermostat (compressor)
52C1,2	Contactor (compressor)		
52F	Contactor (fan I/D)	CH1,2	Crankcase heater
TB1~3	Terminal block	X1,2	Contactor (defrost)
F1,F2	Fuse (3.15A)	X3,4	Auxiliary relay (defrost)
Tr	Transformer	21S41,2	4-Way valve
51C1,2	Over current relay (compressor)	HZ	Auxiliary relay (4-Way-valve)
51F1	Over current relay(fan I/D)	T1~4	Timer (defrost)
51F2,3	Over current relay(fan O/D)	26D1,2	Thermostat (defrost)
63H1,2	High-pressure switch	C03,04, 11~15, 21~25	Connector
FZ	Auxiliary relay (fan)		
CZ	Auxiliary relay (compressor)		
30CZ1,2	Auxiliary relay (check)	CR1~3	Surge killer
30FZ	Auxiliary relay (check)	TH1, 2	Thermistor
TCZ	Timer		

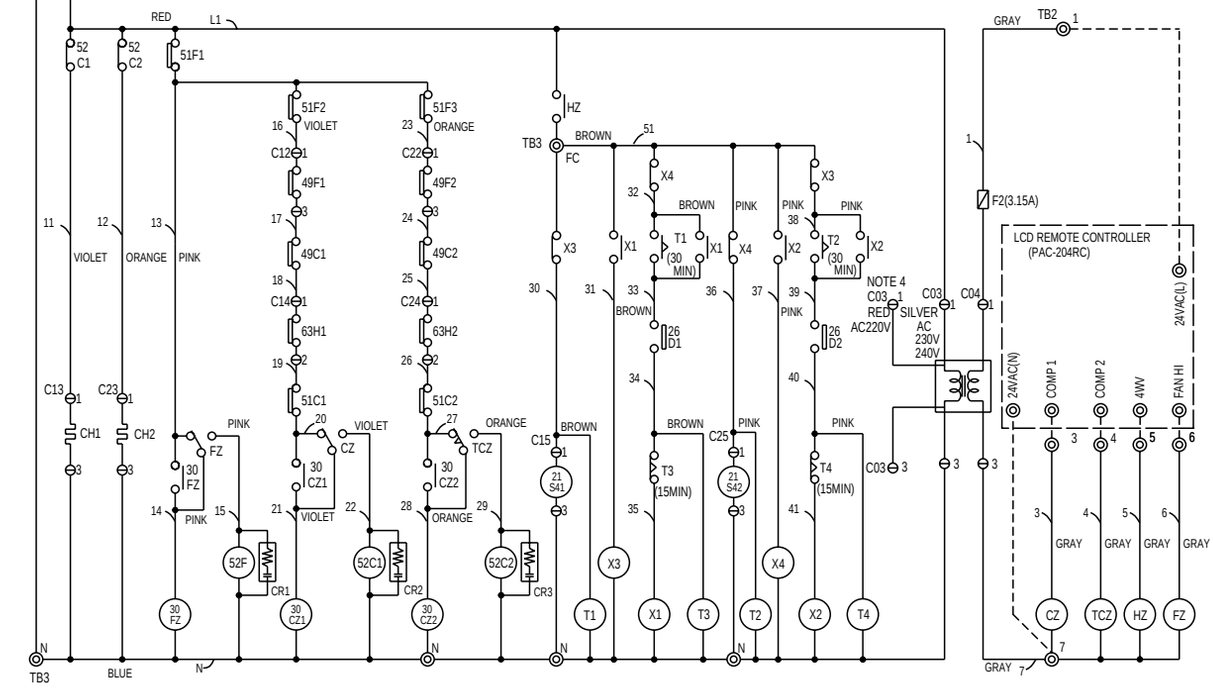

Fig 1.CONTROL BOX ARRANGEMENT

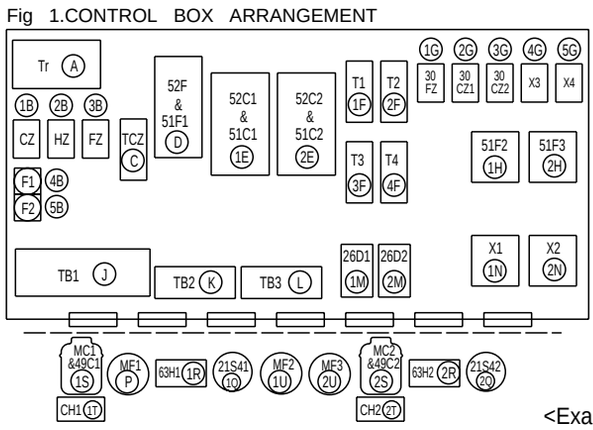

Caution,
1.To protect each fan motor and compressor from abnormal current, Over current relays<51C1,2>, <51F1~3>are installed. Therefore, Do not change factory set value of over current relays.
2.Do not change factory set value of all timers.
3.This timer <TCZ> installed because the power supply breaker may operate if two compressors start at the same time.

Controller connection.

Symbol	No.	Function	PAC-204RC terminal no.
TB2	1	Power (Active)	24VAC(L)
	3	Cooling or Heating operation	COMP1
	4	Cooling or Heating operation	COMP2
	5	Reversing valve for Heating operation	4WV
	6	Fan operation	FAN HI
	7	Power (Neutral)	24VAC(N)

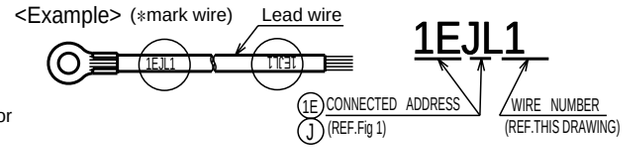

Note:1.The dotted lines show field wiring.
2.The figure in the parenthesis show field supply parts.
3.Color of earth wire is yellow and green twisting.
4.If the power supply is 380VAC, Change the "C03" connector with silver color tape to red color tape.
5.Refer right example about wiring mark.
6.Specification subject to change without notice.

ELECTRICAL OPERATION FLOW CHARTS

PRHG-8, 10MYA

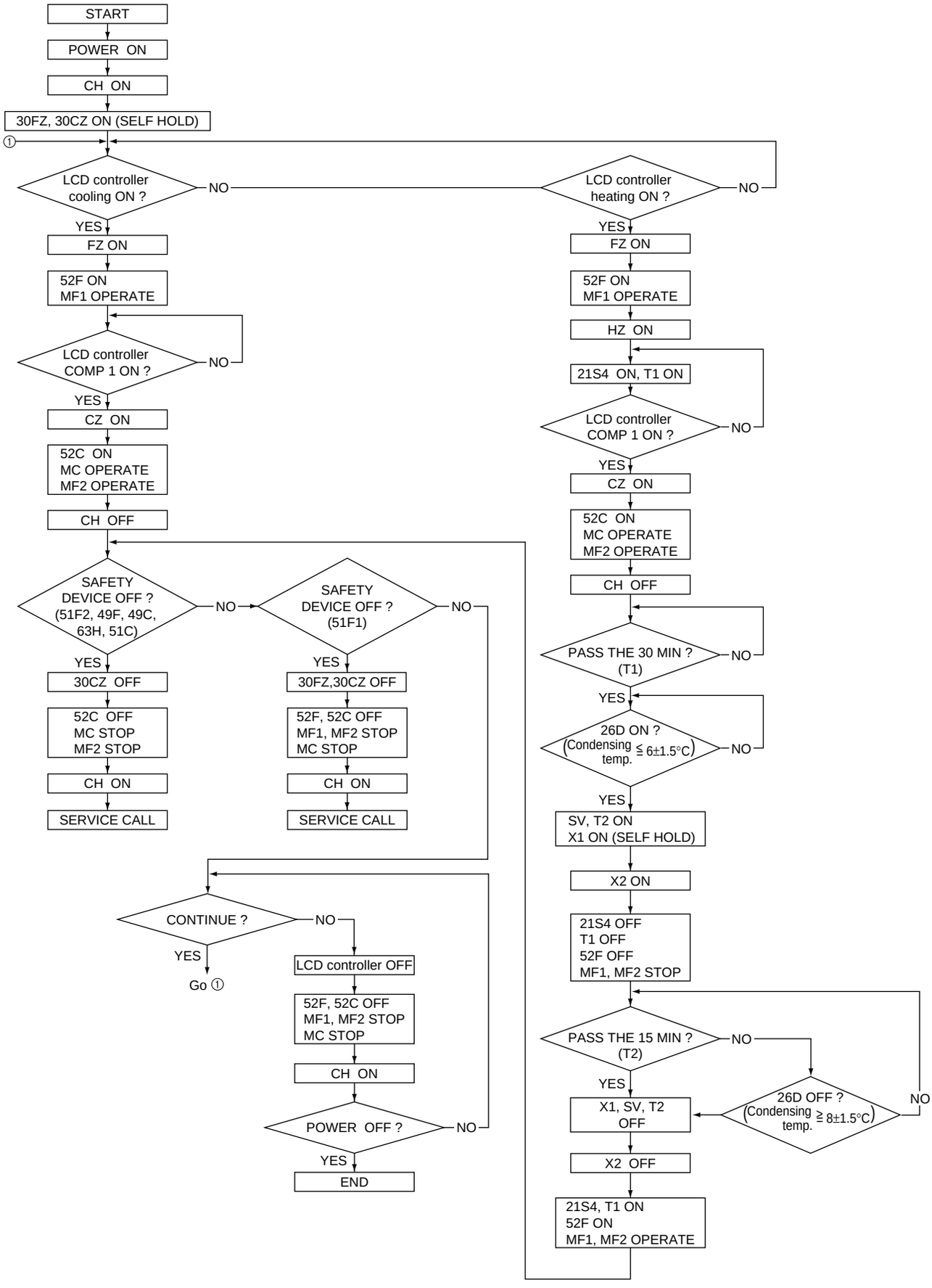

PRHG-15, 20MYA

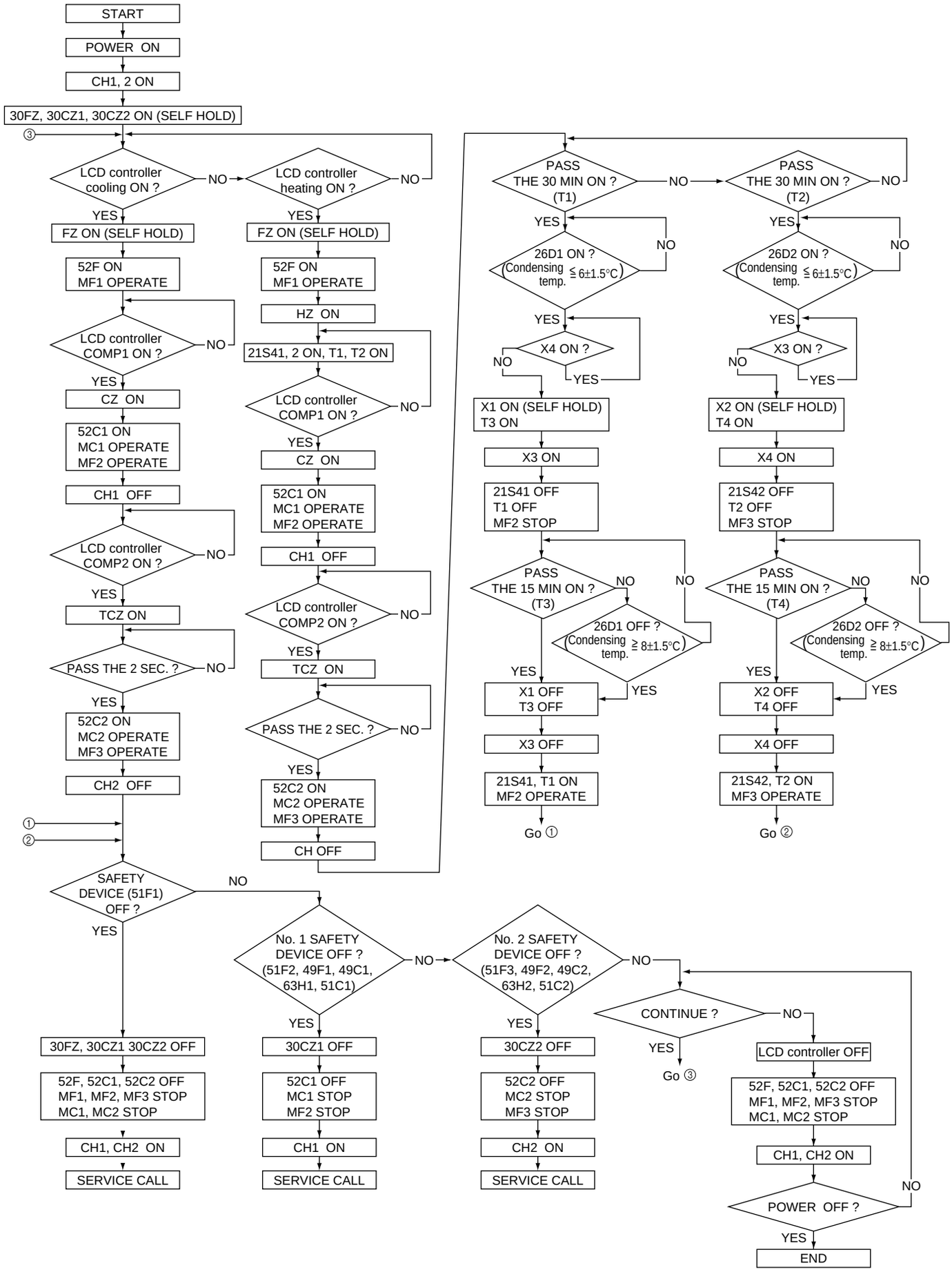

REFRIGERANT CYCLE SCHEMATIC

PRHG-8MYA
PRHG-10MYA
PRHG-15MYA
PRHG-20MYA

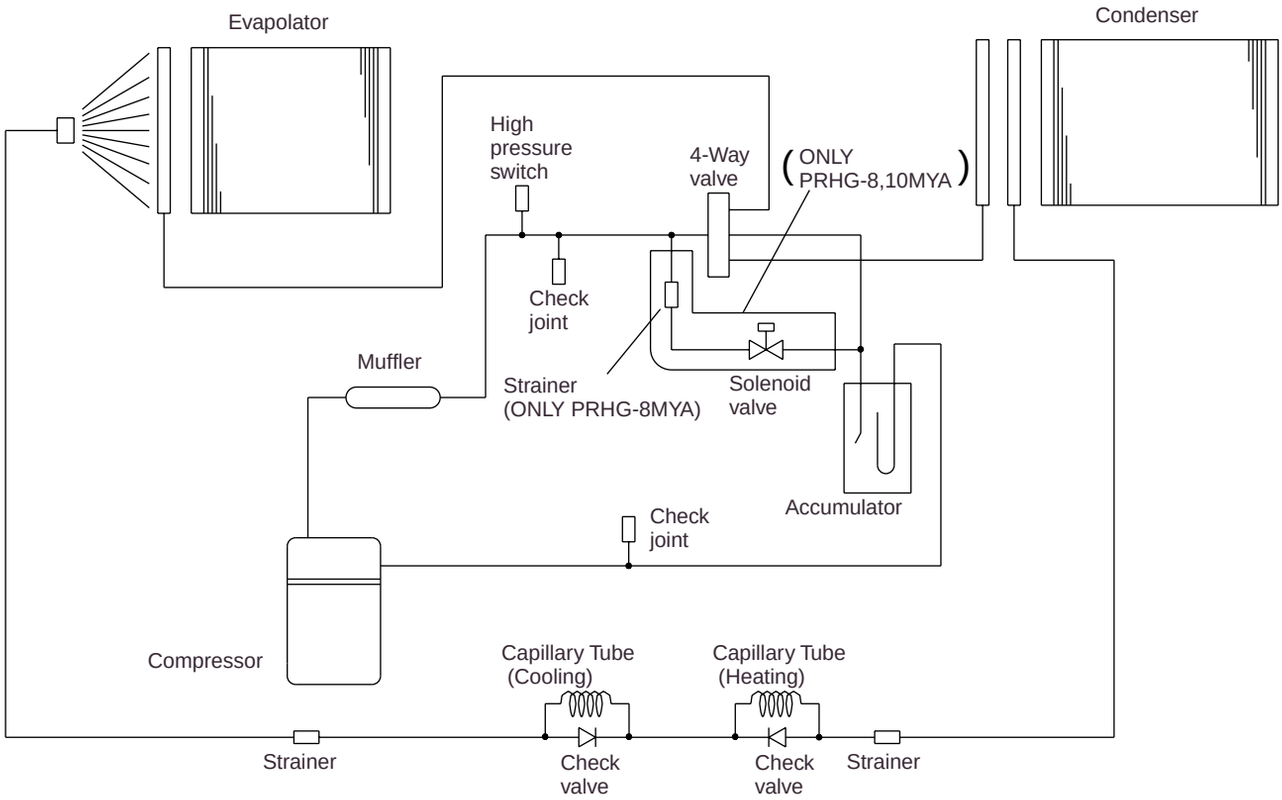

Note: 1.PRHG-15,20MYA is comprised of two refrigerant cycles.

SAFETY & CONTROL DEVICES

ITEM		PRHG-8MYA	PRHG-10MYA	PRHG-15MYA	PRHG-20MYA
Compressor over current relay	51C	22A	31.0A	22A	31.0A
High pressure switch	63H	2.94MPa OFF			
Indoor fan motor over current relay	51F1	2.8A	3.6A	5.0A	7.5A
Outdoor fan motor over corrent relay	51F2,3	2.5A			
Outdoor fan motor internal thermostat	49F	150 ˚C OFF			
Frost protector	26D, 26D1, 2	6 ± 1.5 ˚C ON, 8 ± 1.5 ˚C OFF			
Fuse (Control circuit)	F	3.15A			
Fuse (Operation circuit)	F	3.15A			

ACCESSORY AVAILABILITY

Description	Model	PRHG-8MYA	PRHG-10MYA	PRHG-15MYA	PRHG-20MYA
	Service ref.	PRHG-8MYA-EU	PRHG-10MYA-EU	PRHG-15MYA-EU	PRHG-20MYA-EU
Low Ambient Cooling parts		PAC-205FC			
Pressure Gauge		○			
Air filter		○			
fin guard		○	○	○	○
Anti corrosion (Service ref.)		○ (PRHG-8MYA-EUS)	○ (PRHG-10MYA-EUS)	○ (PRHG-15MYA-EUS)	○ (PRHG-20MYA-EUS)

** Low Ambient cooling* It is possible to conduct cooling operation under an outdoor temperature even down to -5 ˚C.

INSTALLATION

All series of air conditioners are designed for outdoor installations and are to be placed on a slab or rooftop, however if the air conditioner is to be installed in a plant room application, please contact your equipment supplier prior to installation. Access for both service and installation must be provided to the compressors, control wiring and fans as shown below.

1. Space required around units

(1) Care must be taken to prevent recirculation air.
To stabilize compressor, condensing pressures it is recommended that wherever possible the condenser air inlet side be faced away from prevailing winds.

(2) For rooftop installation, the type of mounting base depends on the roof construction.
A built-up roof may not support the weight of the unit and so it may be necessary to support the unit by adding structural members below it.

(3) The units are equipped with hoisting plates for rigging and hoisting of the unit.
The hoisting plates are located on the top of the unit.
When hoisting the unit with a crane, spreader bars must be used to prevent damage to side panels by the supporting cables.

PRHG-8, 10

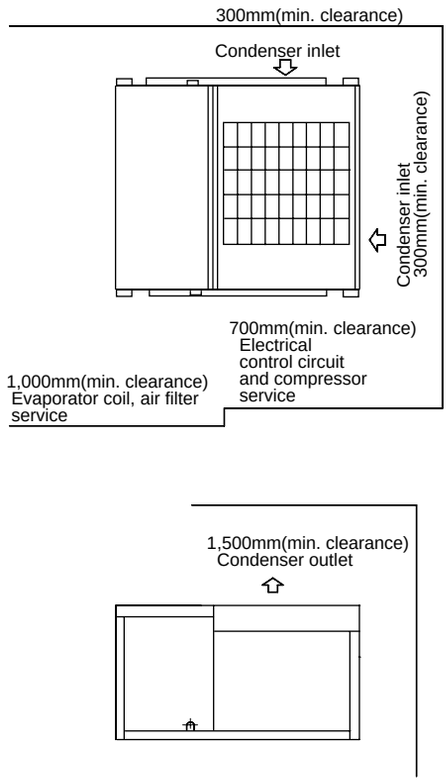

PRHG-15, 20

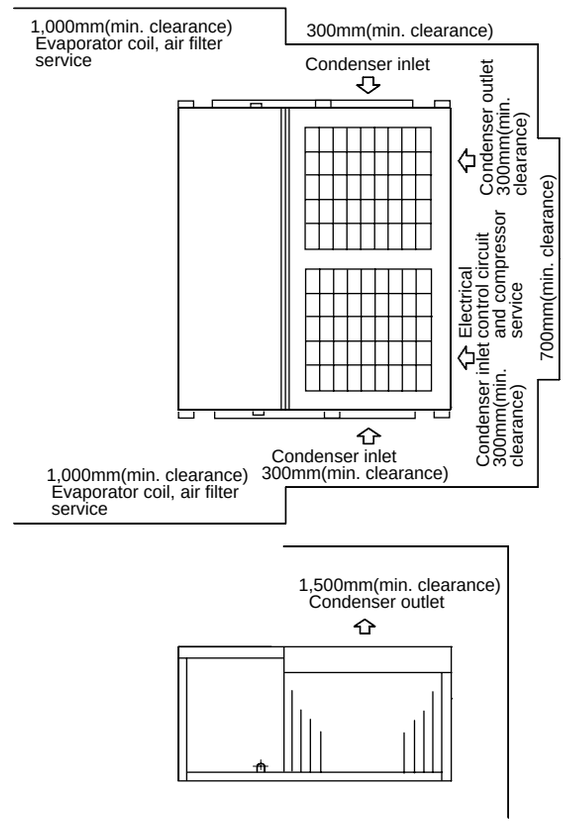

2. Installation of the unit

(1) The figure shows the use of the roof curb available for mounting these units.

(2) The curb should be sealed and fixed to the roof by weather stripping. A suggested means of sealing the unit and roof curb is shown below.

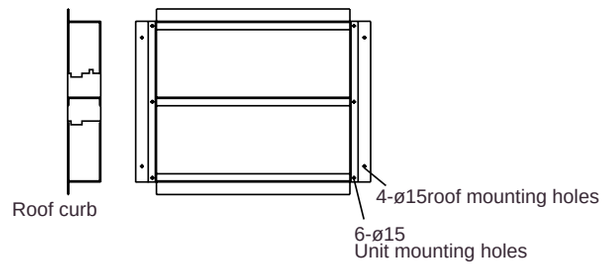

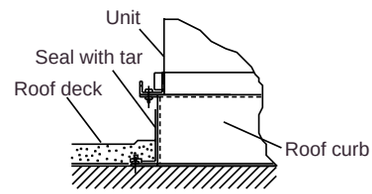

3. Duct construction

(1) Series PRHG side flow units are equipped with horizontal supply and return air openings. Duct connection to the unit should be made with duct flanges and secured directly to the air openings with flexible duct connectors to avoid normal noise transmission.
(2) For vertical air supply, a field supply plenum should be used.
The figure below shows the recommended method for duct connection.
(3) Series PRHG down flow units are equipped with vertical supply and return air openings. Duct connection to the unit should be made with duct flanges to avoid normal noise transmission.
(4) To prevent air leakage, all duct seams should be taped.
Ducts run in air spaces that are not air-conditioned must be insulated and provided with a vapor barrier.
Ducts exposed to the outside must be weather proofed.
For quiet operation, we recommend that the insulation on the supply duct be placed inside, lining the duct.
(5) Where ducts from the outside enter a building, the duct openings in the building should be sealed with weather stripping to prevent rain, duct, sand, etc. from entering the building.
(6) Fans will not accept any external resistance to airflow and what provision is available if ductwork is to be fitted to the external fans.
(7) Correctly sized filters must be fitted and there is no provision within the unit, however the filters may be installed in the return air.
(8) Duct earth wiring must be connected, refer to term 4 (outline drawing) about earth point.
In case of down flow, we must use accessory screw attached on control box cover.

Duct connection with a vertical air plenum at PRHG side flow unit

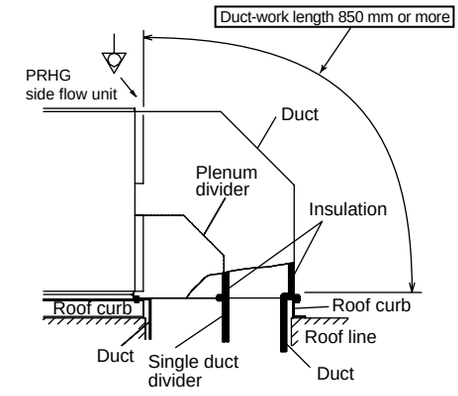

Duct connection at PRHG down flow unit

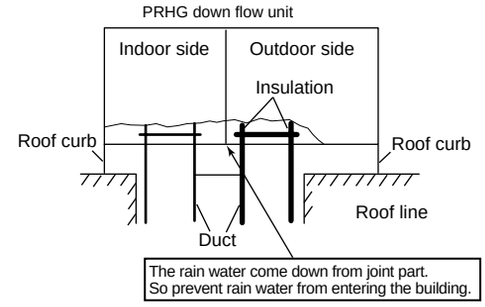

4. Lifting method

When the unit is to be lifted and moved, attach ropes to the suspension plates (4 pcs) provided on the top of the unit.
When the unit is lifted, it is center of gravity tends to shift the unit one side and so balance, such as that in the figure below, should be attained.
The angles at which the ropes suspend the unit should be at least 60° at the compressor end and at least 45° at the condenser end.
Care should be taken to avoid contact with the main unit while carrying.

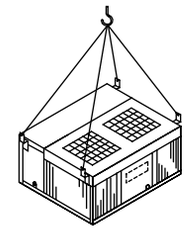

Hook (as directly aligned over the center of gravity as possible.

5. Drain piping

(1) The condensate drain fitting (R 1) is provided. The drain pipe can be led out at the right side.
(2) The drain pipe must be provided with a trap on the outside of the unit and also installed at an incline for proper drainage, as shown below.
(3) To prevent condensate formation and leakage, provide the drain pipe with insulation to safeguard against sweating.
(4) Upon completion of the piping work, check that there is no leakage and that the water drains off properly.

The drain piping should have a drain trap.

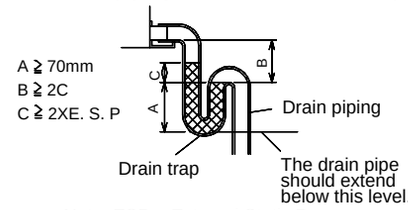

Note: ESP = External Static Pressure
Drain trap for condensate

6. Refrigerant charge

An additional charge is unnecessary.
The table below shows the amount of the charge when the factory is shipped.

	PRHG-8	PRHG-10	PRHG-15	PRHG-20
Refrigerant charge per circuit (kg)	4.7	5.6	2 × 4.7	2 × 5.6

7. Modification method of fan direction (From side flow to down flow)

Series PRHG side flow units are able to modified to down flow at field.
In case of needing down flow model, you can modify to down flow as below method.

Preparation)

Please confirm below accessory parts.

1.Side inlet cover	1 piece	Attach on the top surface of PRHG side flow unit.	
2.Casing leg	2 pieces 4 pieces	Attach on the inside surface of service panel.(8,10MYA) Attach on the inside surface of service panel.(15,20MYA)	8,10MYA 15,20MYA

Modification)

Please modify as below method. (From Step1 to Step4)

(Note)

Please use screws you remove parts (Supply air cover,duct flange, low cover) ,when you re-install additional parts (Side inlet cover, Casing leg).

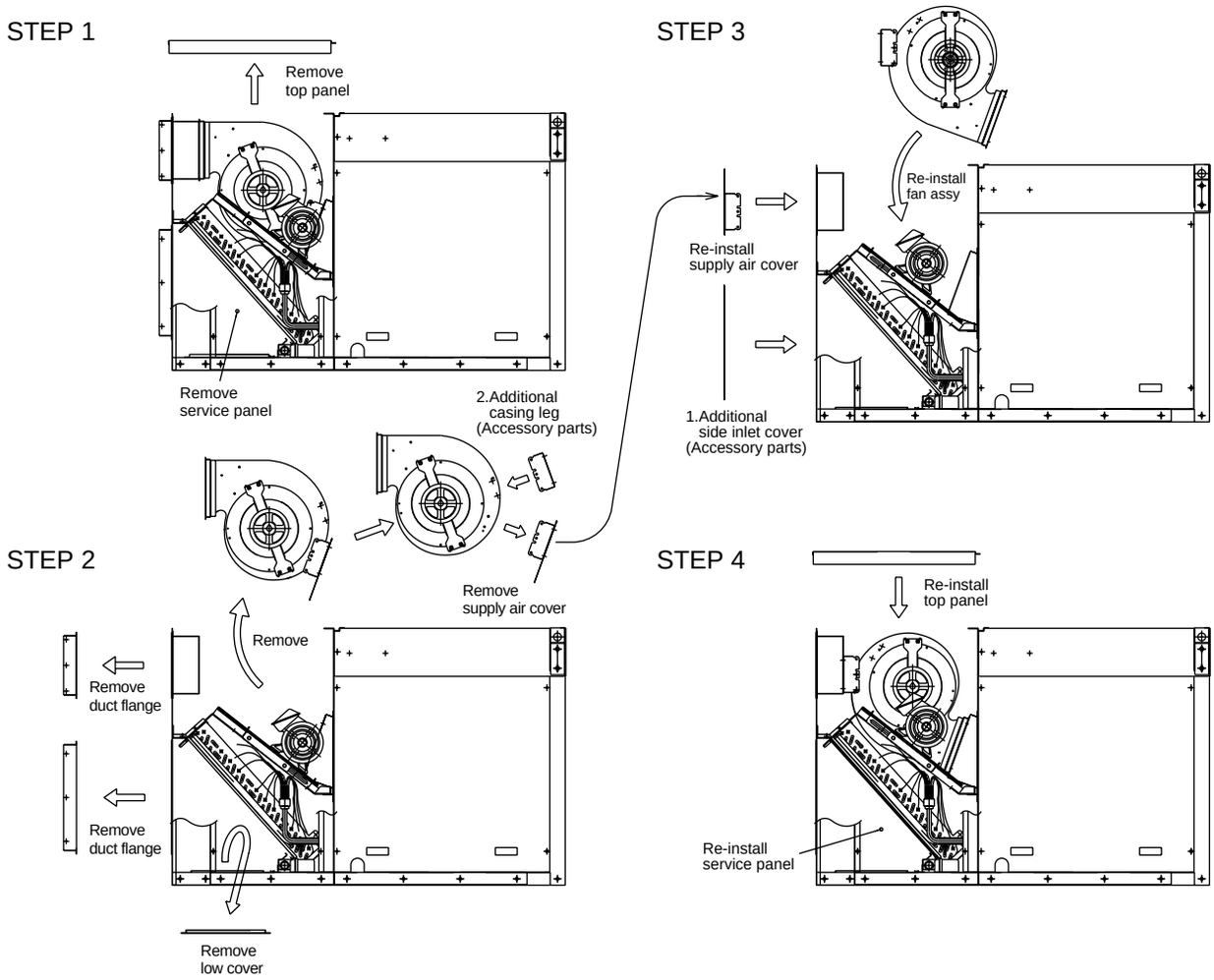

8. LCD remote controller (PAC-204RC)

8.1. Confirmation of parts

The following parts are contained in the carton box together with this manual.
Please check to make sure that everything is included.

	Q'TY
① Remote controller (upper case, lower case)	1
② Pan-head screw with cross hole M4	2
③ Wooden screw 4.1×16 (for installing unit directly on a wall)	2
④ Instruction manual	1

8.2. Outline and inside drawing

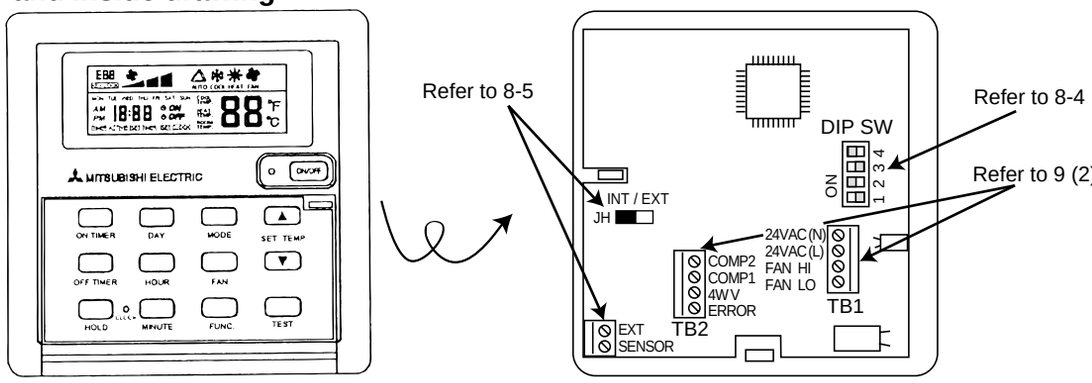

Outline (Key cover open) Controller board

8.3. Installation

(1) Decide where you want to install the LCD remote controller (switch box)
In deciding, please observe the following precautions:
Do not install the LCD remote controller in locations, which are:
- Exposed to direct sunlight.
- Susceptible to humidity and moisture.
- Near a source of heat.
- Near machines emitting high-frequency waves. (High-frequency welders, etc.)

1) Procure the following parts locally : Switch box for two units
Connecting wire (Length : below 20m size : 0.3mm ~ 0.75mm)
Lock nut, bushing

(2) Install the lower case on the switch box.

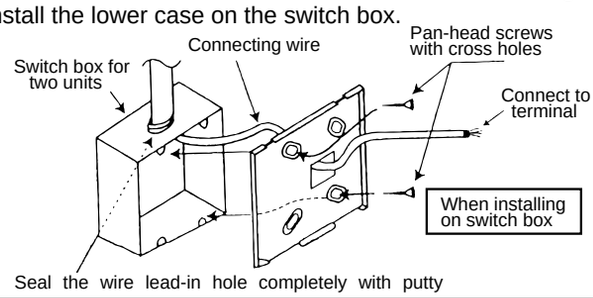

⚠ Caution:
- Over-tightening the screws can cause deformation and/or cracks on the lower case.
- Install the LCD remote controller on a wall with flat surface. Installation on an uneven surface can cause cracks on the LCD and other failures.

Snap the upper case into place. Hook the two upper claws into their slots, and shut the lower part as shown in the right diagram.

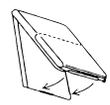

⚠ Caution:
- Press the case until it snaps shut.
- To use, remove the protective sheet on the operation section.

To remove the upper case, insert a screwdriver(-) into one of the slots and slide it in the direction of the arrow shown in the diagram on the right.

⚠ Caution:
- Press the case until it snaps shut.
- To use, remove the protective sheet on the operation section.

8.4. Setting DIP switch

Set the DIP switches on the basis of the below table.

		DIP Switch 1		DIP Switch 2		DIP Switch 3		DIP Switch 4	
		ON	OFF	ON	OFF	ON	OFF	ON	OFF
	Factory pre setting		○	○			○	○	
	PRHG setting	○ **(change)**		○ (Not change)			○ (*2)	○ (*3)	
FUNCTION	Mode select	Heat pump	Cooling only						
FUNCTION	Fan speed Hi / Lo (*1)			Not Available(Hi)	Available				
FUNCTION	Auto change over function (*2)					Available	Not Available		
FUNCTION	Auto start at Power failure (*3)							Not Available	Automatically

Note. *1: This function can not use at above models, because the fan speed of these models is constant.
*2: If need this function, please consult your local MITSUBISHI ELECTRIC SALES office for application advice on this function.
*3: This function can change by customer self.
If this function use, The unit will auto start at power supply come back after power failure.

8.5. How to connect the external sensor (PAC-SE40TSA) to LCD remote controller.

This controller is set for using internal sensor.
If you need the external sensor, please consult your dealer and purchase option external sensor. (PAC-SE40TSA)
And please change below method.

1. Remove the cover of LCD remote controller.
2. Connect the wire of external sensor to terminal as below.
3. Replace the shunt jumper from “INT” side to “EXT” side as below.
4. Check above connection. (Refer to PAC-SE40TSA Installation manual.)

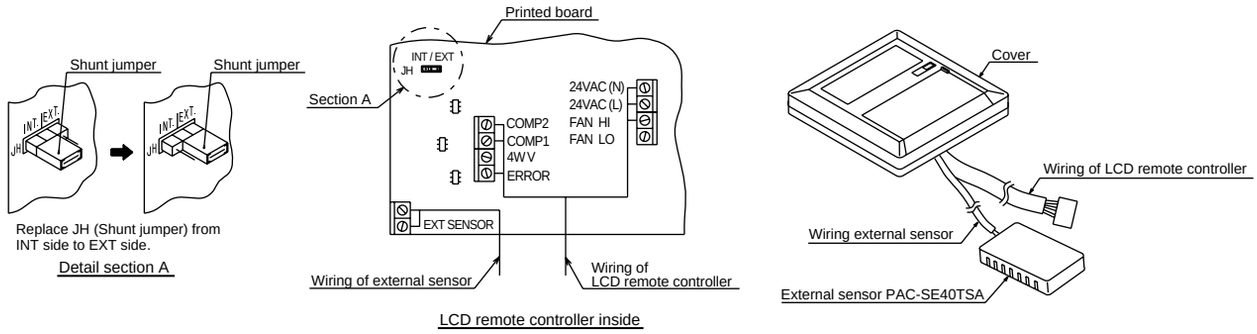

9. Electric wiring

Construct the earth connection.
All electrical work must be carried out by a suitable qualified electrical trades-person and in accordance with local supply authority requirements and associated regulators.
The unit is to be wired directly from an electrical distribution board either by a circuit breaker (preferred) or HRC fuse.

Fix power source wiring to control box by using buffer bushing for sensible force (PG connection or the like).
Connect control wiring to control terminal block through the knockout hole of control box using ordinary bushing.

NOTE: Earth wiring must be connected.
Arrangement such as terminal block in control box.

Control module of unit (PRHG-8,10Y)

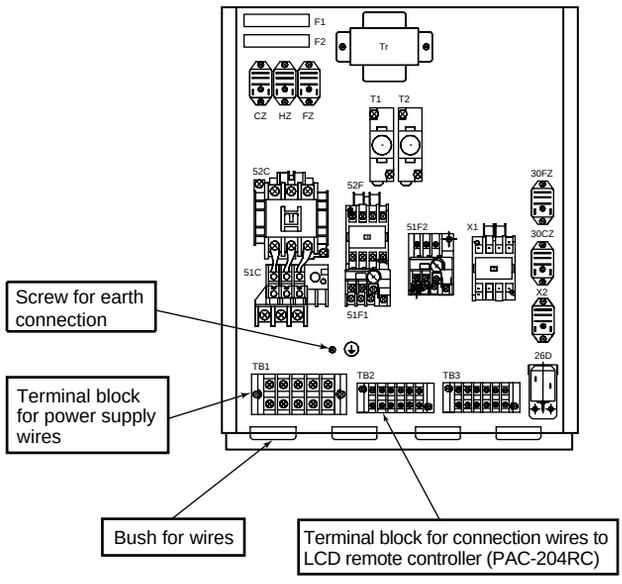

Control module of unit (PRHG-15,20Y)

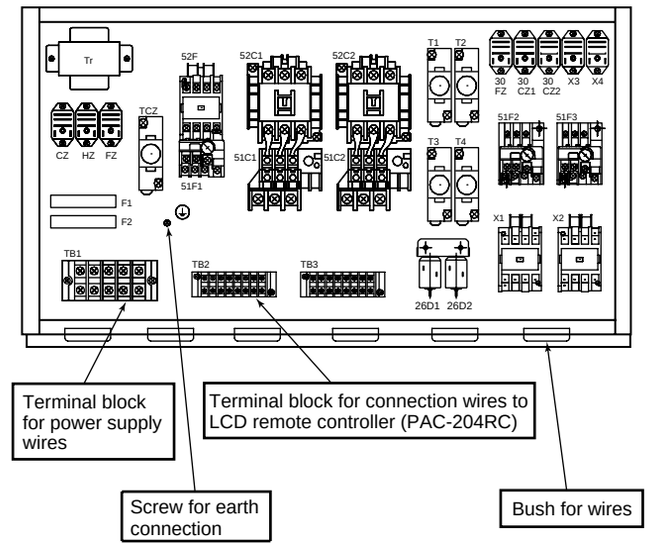

Method for connecting electric wire

Please do the wiring after consulting the electric power company of jurisdiction beforehand in the instruction.

(1) The entire wiring diagram of unit.

PRHG-8 ~ 20Y

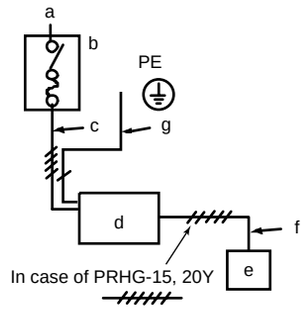

a.	Power supply
b.	Main switch/fuse (field supply)
c.	Power supply wiring for unit
d.	unit
e.	LCD remote controller (PAC-204RC)
f.	Connection wiring for unit / remote controller
g.	Earth

(2) Electrical wiring

Remove the panel on the right side (PRHG-8,10Y) or the rear side (PRHG-15,20Y) of the unit and connect the units power supply wiring to the proper terminals in the control box.

Connect the wires on the basis of the following wiring diagram. If mistook the connection, the controller is damaged.

(1) Connect the wires on the basis of the following wiring diagram.

(2) Connecting work is different each models.

Caution : This controller is damaged if mistook the connection.

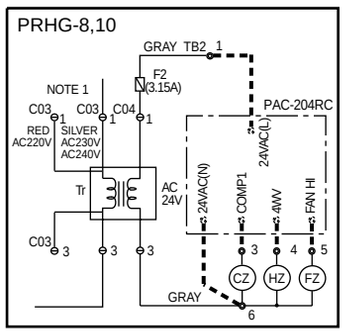

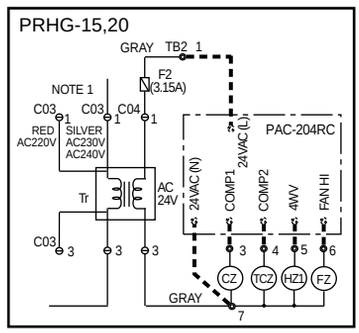

Note 1. If the power supply is 380VAC, change the “C03” connector with silver color tape to red color tape.

(3) Wiring example (For metal piping)

	Power cable	Breaker capacity	Over current protection switch	Earth cable
PRHG-8MYA	14mm^2	50A	50A	14mm^{2}over
PRHG-10MYA	14mm^2	50A	50A	14mm^{2}over
PRHG-15MYA	22mm^2	100A	100A	22mm^{2}over
PRHG-20MYA	38mm^2	100A	100A	22mm^2 over

The grounding wire must be of the same diameter as the power cable wires. Table above is an example.
The selection of other capacities should be determined in accordance with the relevant standards.

(4) Selecting earth leakage breaker (NV)
To select NF or NV instead of a combination of Class B fuse switch use the following.
In the case of Class B fuse rated 15A.

	Fuse (class B)	Earth leakage breaker (with over-load protection)		
PRHG - 8MYA	50A	NV50-CP	50A	30mA 0.1s or less
PRHG - 10MYA	50A	NV50-CP	50A	30mA 0.1s or less
PRHG - 15MYA	100A	NV100-CP	100A	100mA 0.1s or less
PRHG - 20MYA	100A	NV100-CP	100A	100mA 0.1s or less

NV is a product of MITSUBISHI ELECTRIC.
Table above is an example. The selection of other capacities should be determined in accordance with the relevant standards.

Note:
All electrical wiring must be comply with local electrical authority regulations.

10. The putting condition of the belt

1. Set the parallel angle of the fan and the motor pulley as shown in the table and figure 1 below.
2. Set the tension of the per one belt when the flexion load is within the range as shown in the figure 1 and table 2 below at the proper flexion. (A = 0.016 × C mm)
3. Adjust the suitable tension after the belt sit properly across the pulley (after more 24-28 hours working).
   When the new belt is used, adjust the suitable tension about the 1.3 times of the maximum value of the flexion load.
4. Readjust the belt every 2,000 hours after the first adjustment.
   Exchange the belt when the belt's surroundings length has expanded by 2% including the first expansion of the belt. (about 1%) (about 8,000 hours converted working time)

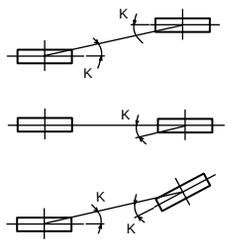

figure1 Parallel degree of pulley

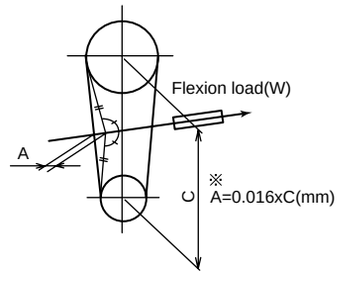

figure2 Belt tension

table 1

pulley \ parallel angle	K (″)	note
pulley	10 or less	gap of 3mm every 1m

table 2

pulley		
type	smaller out diameter (mm)	Flexion load W (N)
B	～135	22 ～29
	136 ～160	27 ～34
	161 ～	29 ～37

11. Before starting the trial run

After having installed the unit, check that:
(1) The unit is fixed securely.
(2) The unit is installed properly.
(3) The drain pipe is provided with a drain trap.
(4) The electrical wiring has been connected correctly and the terminal screws have been properly tightened.
(5) The duct work has been performed correctly.
(6) Before turning the unit on, measure the resistance between the terminals of the electrical parts and ground with a 500V megger and check that the value is at least 1.0M ohm.
If the measured value is below 1.0M ohm, do not operate the unit.
Turn universal power supply at least 6 hours before getting test run in order to current to crank heater.
If current-carrying hours are too short, it may result in a malfunction of compressor.
(7) Check that the fans are rotating in the proper direction.
(8) Check to see whether there are refrigerant leakage, and slack power or transmission cable.
(9) Check the operation of high-pressure switch.
If the two lead wires of the outdoor unit fan motor are disconnected from the contactor and cooling is performed the high-pressure switch should operate and stop the unit after 5 to 10 minutes.

Perform trial operation after completion above items.

INSTRUCTIONS FOR USE

1. Check points for operation

Check the following points before you operate your air conditioner.

(1) Check that there is nothing blocking the flow of air from the air outlet into the air inlet.

Indoor Side

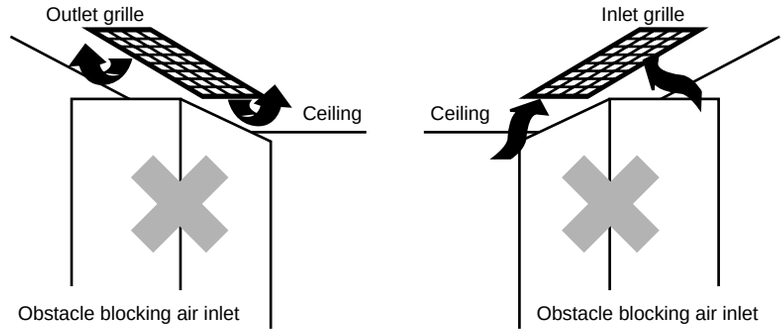

Outdoor Side

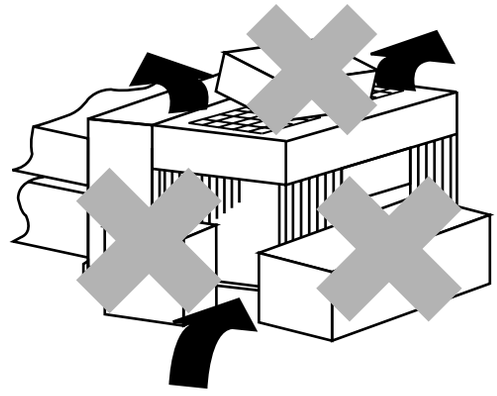

(2) Make sure the air conditioner is properly grounded by checking the ground terminal .

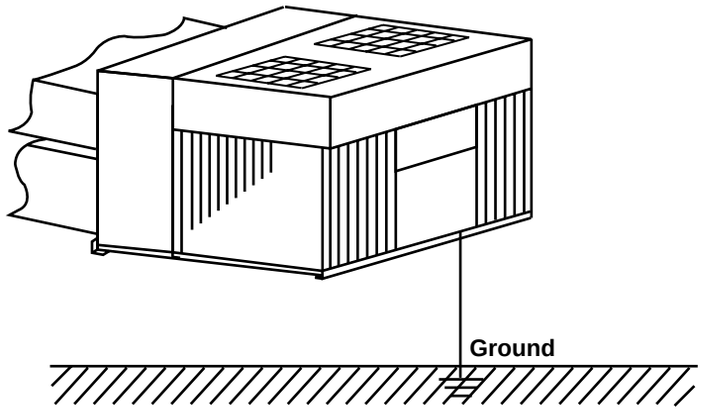

2. Caution for use

Keep the following points in mind to safeguard against failures and break downs.

- For safety, confirm that the earth terminal has been connected to the earth wire correctly.
- Never block or cover the unit's intakes or outlets.
  It will reduce the unit's efficiency.
- To start the unit again after once stopped, be sure to turn the start switch on after 3 minutes elapsed.
  Repeating stopping and starting within 3 minutes gives improper force to the machine which can cause to trip the fuse or power source switch.

3. Maintenance

For superior performance and lasting durability, please do not forget to conduct proper and regular maintenance.

⚠ Warning:

1. Do not wash the unit with water.
If washed with water, electrical shock may be caused.
2. Ahead of the maintenance.
For safety, turn the power source off before service work.

3.1 Cleaning the Eliminator

Clean the eliminator about once a week (If you do not use the air filter : special order or field supply) with a neutral cleanser and leave it to dry in a shady location.
Clean more regularly if the air filter gets very dirty.
If the eliminator gets blocked, air will not be sucked in properly, and the cooling effect will deteriorate.
Failure to clean the eliminator may result in equipment breakdown or malfunctions.

1. Removing the eliminator.
   The eliminator is mounted in the service panel.
   (In front of the heat exchanger.)

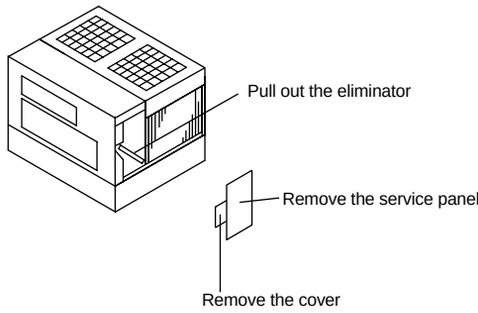

2. The eliminator is cleaned with the cleaner or washed in clear water.
   Please wash when dirty is cruel in lukewarm water by which the neutral detergent is method.
   Please do not use a hot water of 50°C or more. (It transforms occasionally.)
   It is necessary to avoid massage washing and squeeze strongly.
   It must rinse enough and the detergent must not remain.
3. When the eliminator is washed in clear water, it is often dried because of shade.
   Please do not dry it to direct sunshine and a direct fire.

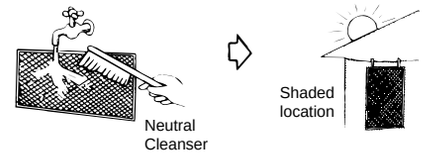

4. The eliminator is installed as before.

3.2 Cleaning of panel

Clean dirt of panel as follows.
Use a household neutral cleanser such as for dishes or vegetables.
Motion a soft cloth with the cleanser, then wipe lightly.
Next, wipe three or four times with another soft cloth moisten with water.
Finally, wipe off all the remaining cleanser with a soft cloth.
Moisten a soft cloth with the alcohol, then wipe off lightly.
Isopropyl alcohol is sold at stores as regents in small quantities.

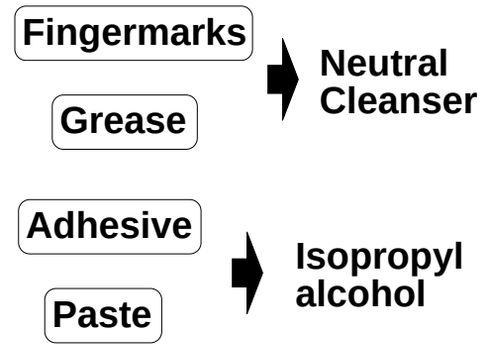

(Note)
Alcohol is highly combustible. Take extreme care when handling.
Also, do not use paint or adhesive thinner.

3.3 Cleaning the outdoor Heat Exchanger

If you use your air conditioner for prolonged periods, the outdoor heat exchanger will become dirty, impairing its function and reducing air conditioners performance. Consult your equipment supplier or air conditioning contractor on how to clean the heat exchanger.

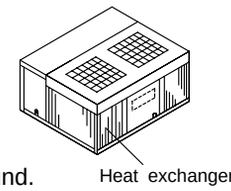

3.4 When beginning to use air conditioner again

Please turn on the power supply after confirming an following check is done and abnormality is not found.
Please do the following work.

It is confirmed that air inlet and outlet are not blocked.
It is confirmed that the earth connection line does not come off.
The earth connection line is installed surely in the unit.
It is confirmed that there are neither lifting, blocking, no bending about the drain-hose.

1. It is confirmed to keep the controller OFF.
2. The power supply switch is turned on.

3.5 When the air conditioner is not to be used for long time

If the air conditioner is not to be used for a long time due to a seasonal change, etc.,
Please do the following work.

1. The power supply switch is turned off.
   If the power supply is kept on, several watts or several tends of watts will be wasted.
   Also, the accumulation of dust, etc., can result in fire.
2. Filter, eliminator and drain pan are cleaned. Pay attention to throw dust in the drain.
3. Run it for 4-5 hours with the air blowing until the inside is completely dry.
   Failing to do so can result the growth of unhygienic, unhealthy mold in scattered areas throughout the room.

3.6 In case of failure

(1) Never remodel the air conditioner. Consult your dealer for any repair service.
Improper repair work can result in water leakage, electric shock, fire, etc.
(2) If the poser breaker is frequently activated, get in touch with your dealer.
Leaving the unit as it is under such conditions can result in fire or failure.
(3) If the refrigeration gas blows out or leaks, stop the operation of the air conditioner.
(4) Thoroughly ventilate the room, and contact your dealer.
Leaving the unit as it is can result in accidents due to oxygen deficiency.

4. Transferring work and construction

4.1 Transfer of installation

(1) When removing and reinstalling the air conditioner when you enlarge your home, remodel or move, consult with your dealer in advance to ascertain the cost of the professional engineering work required for transferring the installation.
(2) Please do not mix the one other than a specified refrigerant when you add the refrigerant (R-22) at the installation and the transferring.
(3) When moving or reinstalling the air conditioner, consult with your dealer.
Defective installation can result in electric shock, fire, etc.

4.2 Place for installation

Please do not use the unit in the following places.
(1) Place where a lot of oil (The machine oil is contained), moistures, and dust exist.
(2) Place where a lot of salinities such as beach districts exists.
(3) Place where sulfur gas, volatile gas, and corroded gas are filled.
(4) Place where acid solution is frequently used.
(5) Place where special spray is frequently used.
(6) Hot spring zone.
(7) Never machine (high cycle welding machine etc.) generating high cycle.
(8) Place where ventilation entrance of unit is closed by snowfall.
(9) The unit must be installed on stable, level surface.
The main body might corrode when the unit is used in such a place, the refrigerant leak, the performance of the unit decrease remarkably, and it cause the damage of parts of the unit.

4.3 Regarding electric work

(1) The electrical work must be undertaken by a person who is qualified as an electric engineer according to the (technical standard respecting electrical installation), (internal wiring rules), and the installation instruction manual with the absolute use of exclusive circuits.
(2) Please install a special power supply in the power supply.
(3) Please install the earth connection for the electric shock prevention.
(4) Never connect the grounding wire to a gas pipe, water pipe, arrester, or telephone grounding wires.
For details, consult with your dealer.
(5) In some types of installation sites, the installation of an earth leakage breaker is mandatory.
For details, consult with your dealer.
(6) The breaker and the fuse must use the one of correct capacity.

4.4 Consideration of the noise

(1) Take sufficient measures against noise when installing the air conditioners at hospitals or communication-related businesses.
(2) If the air conditioner is used in any of the above-mentioned environments, frequent operational failure can be excepted. It is advisable to avoid these type of installation sites. For further details, consult with your dealer.
(3) Choose a place where cool air and noise from the outdoor air outlet of the air conditioner do not inconvenience the neighbors.
(4) If any alien object is placed near the air outlet of the unit, decreased performance and increased noise can result.
Avoid placing any obstacles adjacent to the air outlet.
(5) If the air conditioner produces any abnormal sound, consult with your dealer.

4.5 Disposing of the unit

When you need to dispose of the unit, consult your dealer.
If pipes are removed incorrectly, refrigerant (fluorocarbon gas) may blow out and come into contact with your skin, causing injury. Releasing refrigerant into the atmosphere also damages the environments.

4.6 Maintenance and inspection

(1) If the air conditioner is used throughout several seasons, the insides can get dirty, reducing the performance.
(2) Depending upon the conditions of usage, foul odours can be generated and drainage can deteriorate due to dust and dirt, etc.

HOW TO OPERATE (LCD remote controller PAC-204RC)

If you use the LCD remote controller, you can operate below method.
Please consult operate method with dealer, if you use field supply control parts.

Display section

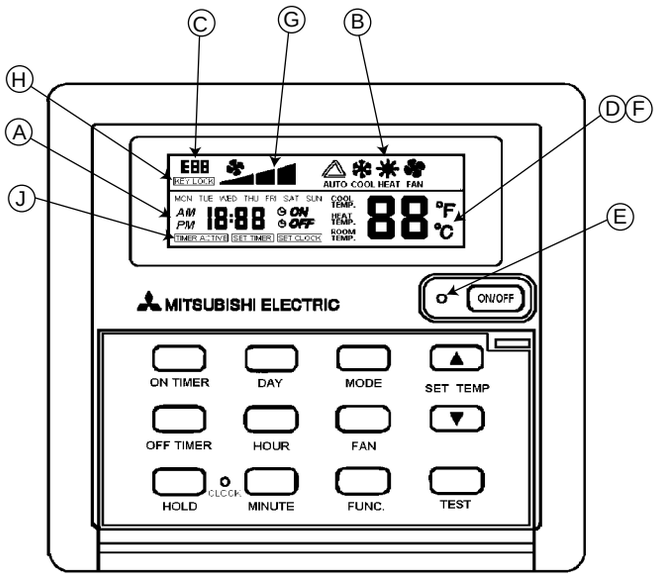

For purposes of explanation, all the displays on this page are shown in their lit condition. This configuration does not occur in the actual unit.

Before starting operation

* Make sure that the power supply is turned ON before use. (Keep the power supply turned ON at all times when the air conditioner is in use. Use of the unit without power can result in compressor failure.)

⚠ Warning:

Check and confirm the power circuit before use. For the contents, refer to
the previously described chapter [Crucial points to be observed for safety].

Ⓐ [Current/start/ending time] Display

Ⓑ Operation mode
Displays the status of operation.

Ⓒ [Checking] Display
This displays indication when some abnormality occurs in the unit.

Ⓓ [Set temperature] Display
Displays the set temperature.

Ⓔ [Operation] Lamp
Lights up during operation, goes off during stop.

Ⓕ [Room temperature] Display
Displays the temperature of the air sucked in during operation.

Ⓖ [Fan] Display
This displays indication fan operation.

Ⓗ [Key lock] Display
This display indication during key lock function active.

Ⓙ [Timer Hold / Resume setting] Display

1. ON / OFF

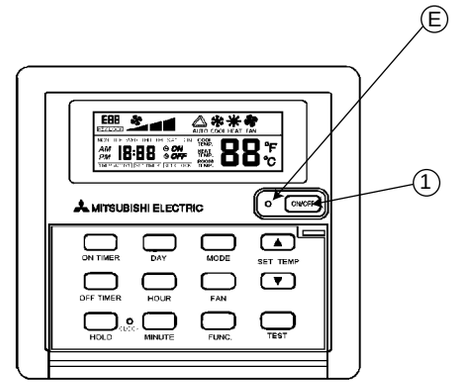

Ⓔ Operation lamp

Start operation

Press the [ON/OFF] button ①
Operation lamp lights up and operation starts.

Stop operation

Press the [ON/OFF] button ① again
Operation lamp goes off and operation stops.

* Once the buttons have been set, pressing of the [ON/OFF] button only can repeat the same operation thereafter.
* During operation, the operation lamp above the [ON/OFF] button lights up.

⚠ Caution:
Even if the operation button is pressed immediately after the operation is once stopped, operation is not restarted for about 3 minutes.
This function protects the machine. It automatically starts operation after the lapse of approximately 3 minutes.

2. Selecting operation

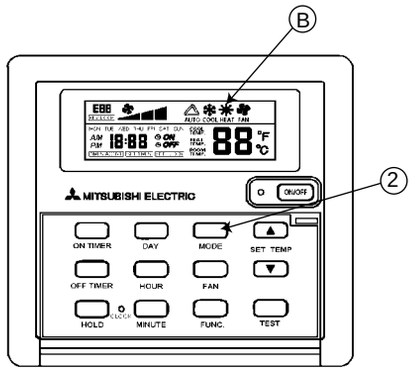

Ⓑ Operation mode display

When selecting operation

Press the [MODE] button ②
Consecutive press of the [MODE] button switches the operation over to “FAN”, “COOL”, “HEAT” and ※“AUTO”.
For the contents of operation, check the display.

For fan

Press the [MODE] button ② and bring up the “FAN” display.

* The fan operation functions to circulate the air in the room.
* The temperature of the room cannot be set by fan operation.

⚠ Caution:
Never expose your body directly to cool air for a long time. Excessive exposure to cool air is bad for your health, and should therefore be avoided.

For cooling

Press the [MODE] button ② and bring up the “COOL” display.

For heating

Press the [MODE] button ② and bring up the “HEAT” display.

⚠ Caution:

* When the air conditioner is used together with burners, thoroughly ventilate the area. Insufficient ventilation can result in accidents due to oxygen deficiency.
* Never place a burner at a place where it is exposed to the airflow from the air conditioner.
  Doing so can result in imperfect combustion of the burner.

For Auto change over※

Press the [MODE] button ② and bring up the “AUTO” display.

※ This function is special order. Please consult your local Mitsubishi Electric Sales office for application advice on this function.
Because this function need low ambient cooling parts as option.
Indoor temperature can be set within the following range.

Indoor temperature setting range : 17 ~ 30 ˚C

3. Room temperature adjustment

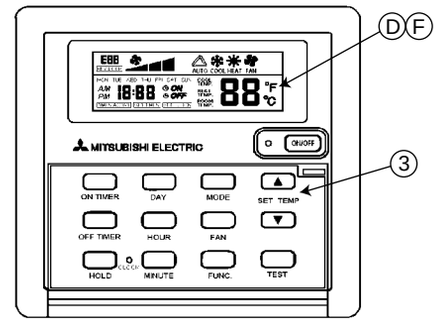

Ⓓ Set temperature display and Ⓕ room temperature display

To change room temperature

Press the [SET TEMP] button ③ and set the room temperature of your choice.
Press △ or ▽ button once changes the setting by 1˚C.
If the pressing is continued, the setting continues to change by 1˚C

* Indoor temperature can be set within the following range.
  Cooling 19 ~ 30 ˚C
  Heating 17 ~ 28 ˚C
* It is impossible to set the room temperature by the air-blow operation.

Press △ and ▽ button together, the unit of temperature
change “˚C ” (degree-centigrade) and “˚F ”. (degree-Fahrenheit)

4. Time setting

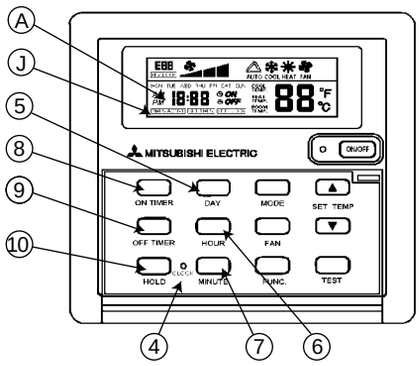

Ⓐ Current time display
Ⓙ Timer Hold/Resume display

Clock setting

Press the [CLOCK] key ④ one time will activate set clock mode.
Press the [CLOCK] key ④ again will disable set clock mode.
Under set clock mode, the real time clock and present day setting can be changed by pressing [DAY] button ⑤ , [HOUR] button ⑥ or [MINUTE] button ⑦ .

⚠ Caution:
[CLOCK] key ④ is not allowed to be pushed with the thing of sharp tip.

7-Days timer setting

There are two buttons for timer. One is [ON TIMER] ⑧, another is
[OFF TIMER] ⑨ .
Press the button one time will activate set timer mode.
Press the same button again will disable set timer mode.
Under set timer mode, the 7-days timer setting can be changed by pressing [DAY] button ⑤, [HOUR] button ⑥ or [MINUTE] button ⑦.

Day setting

During set clock mode or set timer mode, press the [DAY] button ⑤ will change the day setting.

Hour setting

During set clock mode or set timer mode, press the [HOUR] button ⑥ will change the hour setting.

Minute setting

During set clock mode or set timer mode, press the [MINUTE] button ⑦ will change the minute setting.

Timer Hold / Resume setting

If 7-days timer is set, then the word “Timer Active” is displayed Ⓙ .
To clear all the timers setting, press and hold the [HOLD] button ⑩ until the word “Timer Active” is not displayed.
To resume the timer setting after timers have been held, press and hold the [HOLD] button ⑩ until the word “Timer Active” is
displayed.

5. Other function

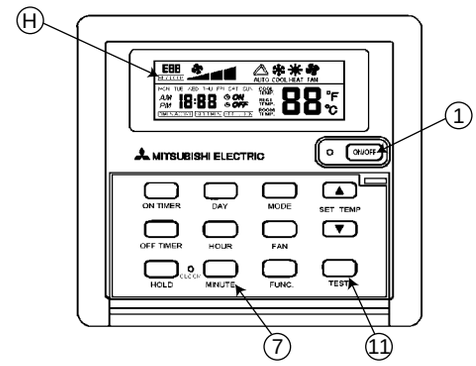

Key lock

Press the [MINUTE] button ⑦ three times consecutively, the word “KEY LOCK” will displayed Ⓗ .
At this time, only [ON-OFF] button ① is valid.
This function purpose is protect from mischief of child etc.

To cancel the key lock function, Please press [MINUTE] button ⑦ three times consecutively again.

Test run

Press the [TEST] button ⑪ two times consecutively.
The unit will run and finished automatically after two hours.

6. Troubleshooting

Before you ask for repair service, check the following points:

State of Machine	LCD remote Controller	Cause	Troubleshooting
It does not run.	"ON-OFF" display is not lit up. No display appears even when the [ON/OFF] button is pressed.	Power failure	Press the [ON/OFF] button after power restoration.
		The power supply is turned OFF.	Turn the power supply ON.
		The fuse in the power supply is gone.	Replace fuse.
		The earth leakage breaker is gone.	Put in the earth leakage breaker.
		The wiring phase of power supply is mistaken.	Modify the wiring phase of power supply.
Air flows out but it does not cool or heat enough.	The liquid crystal display shows that it is in the state of operation.	Improper temperature adjustment.	After checking the set temperature and inlet temperature on the liquid crystal display, refer to [To change room temperature] on page 6, and operate the adjustment button.
		The filter is filled with dust and dirt.	Clean up the filter.
		There are some obstacles at the air inlet or outlet of the units.	Remove.
		Windows or doors are open.	Close.
		Insufficient refrigerant charge.	Contact with your installing contractor.
Cool or warm air does not come out.	The liquid crystal display shows that it is in operation.	The restart-preventing circuit is in operation for 3 minutes.	Wait for a while. (To protect the compressor, a 3-minute restart-preventing circuit is built into the unit. Therefore, there are occasions sometimes when the compressor does not start running immediately. There are cases when it does not run for as long as 3 minutes.)
Can not change to Heat mode.	Can not change to Heat mode when press the "MODE" key.	DIP switch 1 is not correct.	Change the DIP switch off to on. (Refer to Instruction manual for Installation.)
On heating, the air flow stops.		Indoor unit operation shift to defrost. (PRHG-8,10 only)	Wait for a while. (Heating operation starts after ending defrosting operation.)
On heating, cool air comes out.		Indoor unit operation shift to defrost. (PRHG-15,20 only)	Wait for a while. (Heating operation starts after ending defrosting operation.)
Fan runs but compressor do not run.		The set temperature of thermostat is excessively high for cooling. excessively low for heating.	For temperature control, decrease the set temperature at cooling. increase the set temperature at heating.
		The room temperature is excessively low for cooling. excessively high for heating.	Can not be operated as it is out of temperature control range.
Compressor runs but stops immediately.		Air outlet or inlet are blocked.	Remove blocking matter.
Water or steam is discharged from the unit.		At cooling, water which places to cooling piping and piping connection part drops. When heating, water which places to the heat exchanger drops.	It is not a breakdown. Please contact and consult your dealer.
		The drain pipe is clogged due to dust, therefore the drain water overflow.	
On heating, the air flow stops although a set temperature is not reached.		Outdoor unit operation shift to defrost.	It is not a breakdown. Please use as it is.

LCD remote controller error display

Indicate	Cause	Troubleshooting
E01	Room temperature sensor open	Automatically reset to restoration error
E02	Room temperature sensor short	Automatically reset to restoration error
E03	Error input from Indoor unit or Outdoor unit	Push the On-Off switch. (OFF to ON)

LOW AMBIENT COOLING PARTS; OPTION PAC-205FC (Fan controller)

1. Outline

This fan controller apply to following units.

Model name	Q'TY	Model name	Q'TY
PRHG-8,10	1 set	PRHG-15,20	2 set

These units can be operated on cooling mode at the low ambient temperature with this optional FAN CONTROLLER.
Please read carefully this manual and install following this.

2. Caution

1. Fan controller changes the outdoor fan speed.
   Strong wind is injurious to fan speed controller.
   Please install the windproof when unit is influenced by strong wind such as install it on the place there is no building in surrounding or the rooftop
2. As the case may be the operation with FAN CONTROLLER generate an electromagnetic sound from fan motor.
   Please consider the soundproofing wall equipment etc. when using the fan controller in the place where the noise becomes a problem.
   There is no worry which interferes to the unit though an electromagnetic sound might be generated from fan motor.
3. When shipping the fan controller, the dip switch on the control circuit board is set as follows.
   Do not change factory set of all dip switches.

SW0	SW1	SW2	SW3
ON 1 2 3 4 (3,4 ON)	ON 1 2 3 4 (All OFF)	ON 1 2 3 4 (1,3 ON)	ON 1 2 3 4 5 6 7 8 (1,3,4,5,6 ON)

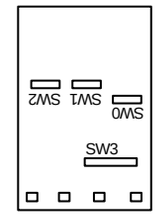

Control circuit board

※ Only SW3 direction is different.

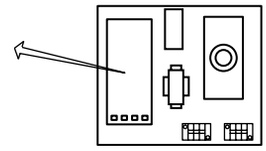

Fan controller inside

3. Parts

There are the following parts in this box, and confirm whether there are all attached.
There are two kinds of wiring sticker in this box.
Please select the pertinent one by model name.

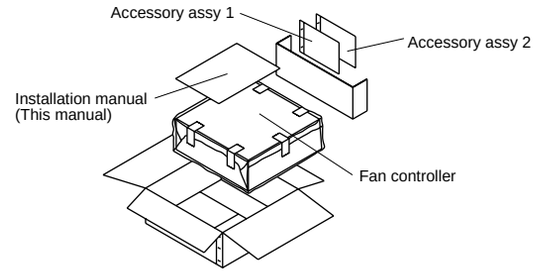

Accessory assy 1

Name	Wiring sticker	Screw	Connector cap	Spring	Earth sticker	Grommet
Shape						
Amount	2	12	1	1	1	2

Accessory assy 2

Name	Attachment	Attachment	Attachment	Pipe cover	Band	Connector assy
Shape						
Amount	1	1	3	3	15	1

4. Instllation

4.1. PRHG-8,10

Please use the following parts during installation of fan controller.
There are two kinds of wiring sticker, please use writing as “W881927”.

	Accessory assy 1					Accessory assy 2	
Use	①Wiring sticker	② Screw	③ Spring	④Earth sticker	⑤ Grommet	⑥ Pipe cover	⑦ Band
	1	3	1	1	2	3	15

	Accessory assy 1			Accessory assy 2			
Not use	Wiring sticker	Screw	Connector	Attachment	Attachment	Attachment	Connector assy
	ONLY PU(H)-7,8,10						
	1	9	1	1	1	3	1

4.1.1. Install

1. The service panel and control box cover are removed.

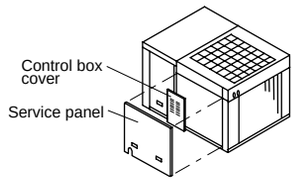

2. Penetrate the knockout holes at the top panel.
   The grommet ⑤ (2 pieces) install to the hole for wiring in the top panel.

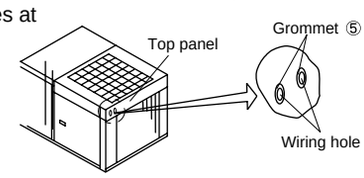

3. Wiring from the fan controller is passed through the hole of procedure 2.
   The thermistor and other wiring should use separate wiring hole.
   The fan controller install to the top panel with the screw ② (2 pieces) and install to the holder with the screw ② (1 piece).

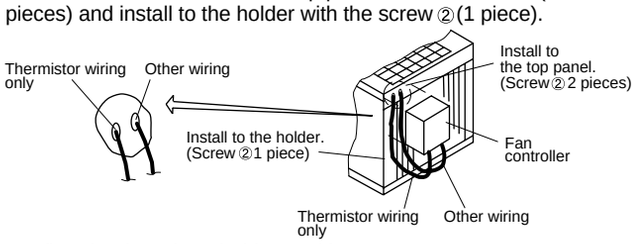

4. Confirm the thermistor holder position.
   The spring ③ insert in the thermistor holder.
   The thermistor (black wiring) which is connected to the fan controller is put in the holder.

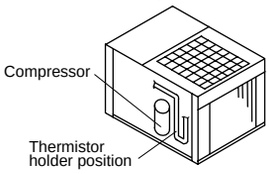

Thermistor position

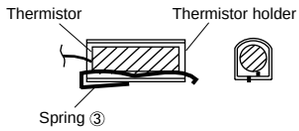

Insert the thermistor

5. Please use the pipe cover ⑥ (1 piece) and fix with the band ⑦ (2 pieces).

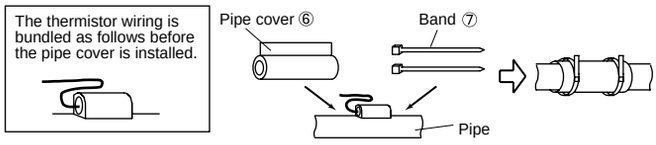

6. The earth sticker and wiring sticker are put on an following place.
   1. The earth sticker ④ is put on the pillar.
   2. The wiring sticker ① is put on the service panel cover (inside).

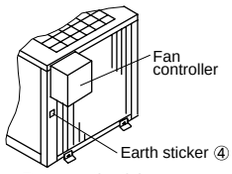

Put a earth sticker

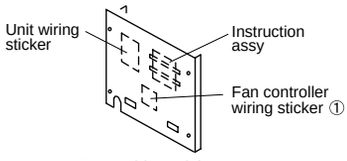

Put a wiring sticker

4.1.2. Wiring

1. Disconnect connector C11 - C11.
   The connector C11 removes to the motor side and the control box side.

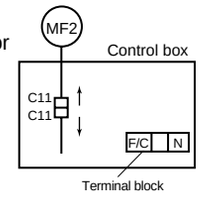

2. When the fan controller is installed, the connector is connected in the control box.
   The wiring from CN04 connect to the terminal block (F/C, N) in the control box.

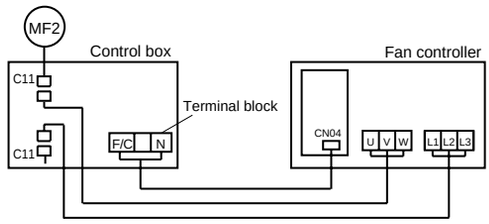

Please be careful, do not damage wires by the sheet metal edges or the fin, etc.

3. After connect wiring, to prevent wiring being damaged with the fin, the pipe cover ⑥ (2 pieces) and band ⑦ (4 pieces) are used.
   In that time, never bundle the thermistor wiring with other wiring.

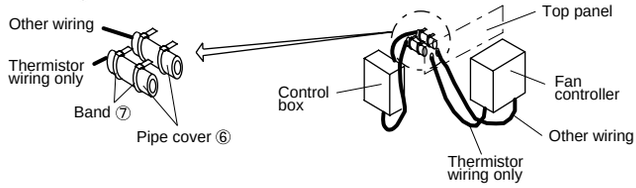

4. After wiring ends, the wiring is bundled with a remaining band.
   Never bundle the thermistor and other wiring together.

5. Ensure there is not wiring mistake found, then only install the controller box cover and service panel.

4.2. PRHG-15,20

Please use the following parts during installation of fan controller. There are two kinds of wiring sticker, please use writing as "W881927".

The fan controller is necessary for these models by two sets. (The following accessory parts show the fan controller one set.)

	Accessory assy 1					Accessory assy 2	
Use	①Wiring sticker	② Screw	③ Spring	④Earth sticker	⑤ Grommet	⑥ Pipe cover	⑦ Band
	1	3	1	1	2	3	15

	Accessory assy 1			Accessory assy 2			
Not use	Wiring sticker	Screw	Connector	Attachment	Attachment	Attachment	Connector assy
	ONLY PU(H)-7,8,10						
	1	9	1	1	1	3	1

4.2.1. Install

1. The service panel and control box cover are removed.

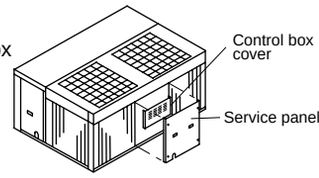

2. Penetrate the knockout holes at the top panel.
   The grommet ⑤ (2x2 pieces) install to the hole for wiring in the top panel.

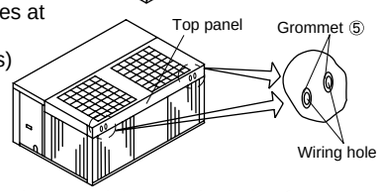

3. Wiring from the fan controller is passed through the hole of procedure 2.
   The thermistor and other wiring should use separate wiring hole.
   The fan controller install to the top panel with the screw ②(2x2 pieces) and install to the pillar with the screw ②(2x1 pieces).

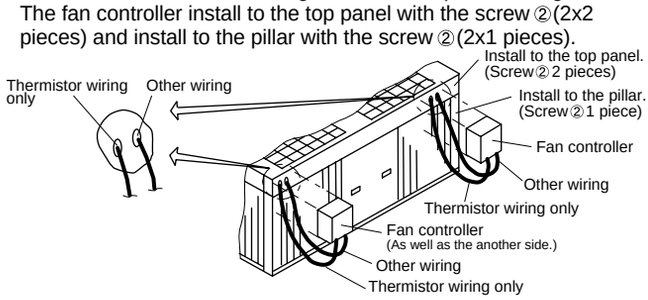

4. Confirm the thermistor holder position. (2 places)
   The spring ③ (2x1 pieces) insert in the thermistor holder.
   The thermistor (black wiring) which is connected to the fan controller is put in the holder.

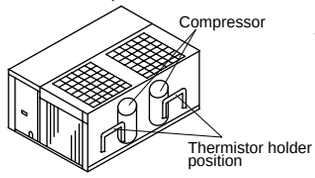

Thermistor position

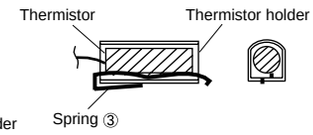

Insert the thermistor

6. Please use the pipe cover ⑥ (2x1 pieces) and fix with the band ⑦ (2x2 pieces).

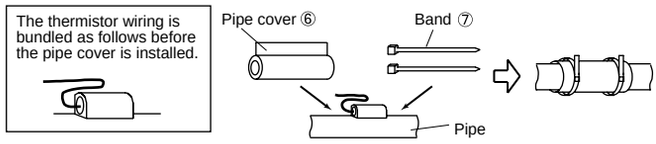

6. The earth sticker and wiring sticker are put on an following place.
   1. The earth sticker ④ (2x1 pieces) is put on the pillar.
   2. The wiring sticker ① (1 piece) is put on the service panel cover (inside).

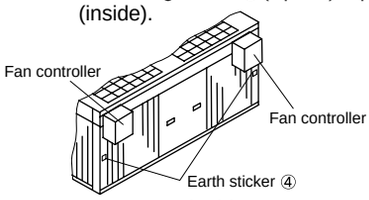

Put a earth sticker

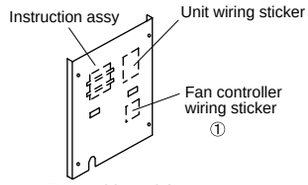

Put a wiring sticker

4.2.2. Wiring

1. Disconnect connector C11 - C11 and C21 - C21.
   The connector C11 and C21 remove to the motor side and the control box side.

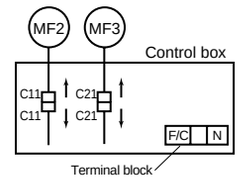

2. When the fan controller is installed, the connector is connected in the control box.
   The wiring from CN04 connect to the terminal block (F/C, N) in the control box.

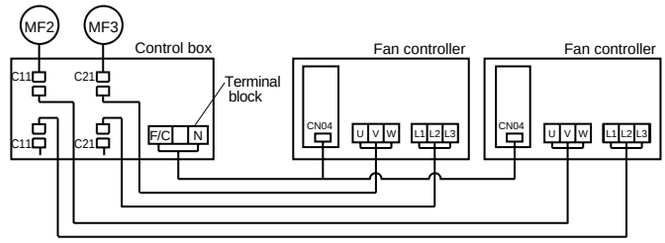

Please be careful, do not damage wires by the sheet metal edges or the fin, etc.

3. After connect wiring, to prevent wiring being damaged with the fin, the pipe cover ⑥ (2x2 pieces) and band ⑦ (2x4 pieces) are used.
   In that time, never bundle the thermistor wiring with other wiring.

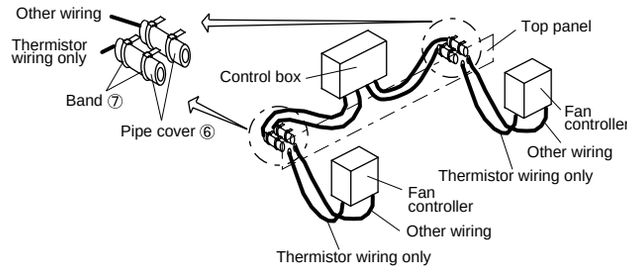

4. After wiring ends, the wiring is bundled with a remaining band. Never bundle the thermistor and other wiring together.

5. Ensure there is not wiring mistake found, then only install the controller box cover and service panel.

5. Before starting the trial run

Please execute the following confirmations to prevent wrong connection.
If there is wrong connection, it may damage fan controller, but also damage the unit.

Confirmation

Please intercept the power supply without fail, and secure safety when you execute detaching wiring, the connector, and the measurement machine to the following work.

Step		Confirmation matter	Check	Correspondence
Step 1 Connected confirmation	Step 1-1	Is fan controller's power supply input wiring position connected correctly as shown in installed manual?		
	Step 1-2	Is the phase of the connection of fan controller power supply input (TB IN) accurate?		
	Step 1-3	Is the phase of the connection of fan controller output (TB OUT) accurate?		
	Step 1-4	Is the phase of connection of fan controller output wiring to fan motor accurate?		
	Step 1-5	Is the thermistor for the condensing temperature detection of the attachment connected with CN01?		
	Step 1-6	Is the thermistor for the condensing temperature detection accurately installed in the unit?		
	Step 1-7	In case of the heat pump model, the wiring for full load input is connected with CN04?		
	Step 1-8	In case of the heat pump model, the wiring for full load input is connected accurately in control box?		
Step 2 Drive confirmation	Step 2-1	Does the fan rotate in a correct direction, when the unit is driven ?		Troubleshooting 1,2
	Step 2-2	The thermistor for the condensing temperature detection is removed to CN01. Drive to the cooling operation. (The unit stops abnormally when the cooling operation drive is continued for a long time occasionally. - High pressure switch off) Whether LED01 has blinked is confirmed. When the unit is in operation, the fan controller output voltage measured in TB OUT, and checked whether the output of about 200V. There is a problem when it is an output of about 300V.		Troubleshooting 3
	Step 2-3	The thermistor for the condensing temperature detection is surely connected with CN01 as before.		
	Step 2-4	In case of the heat pump model and the heating drive is possible, the heating drive is executed and the voltage of CN04 is input AC198V - 264V. In that case, the fan must be full load drive. (The output of the power-supply voltage is confirmed in TB OUT.) When heating cannot be driven, step 1-7, step 1-8 is executed again.		Troubleshooting 4

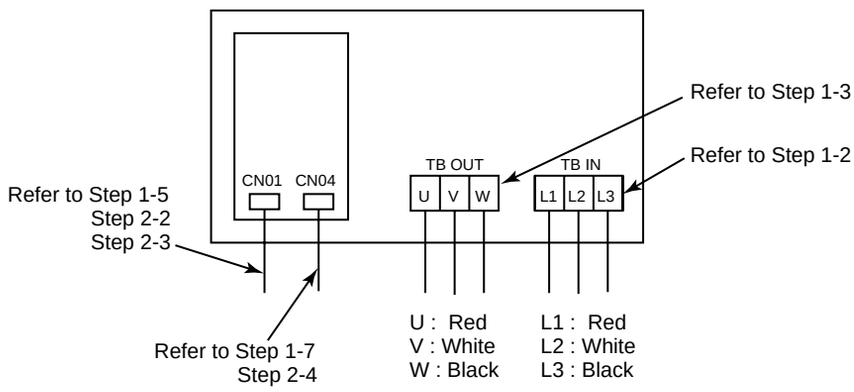

Fan controller layout

6. Troubleshooting (PAC-205FC)

Please intercept the power supply without fail, and secure safety when you execute detaching wiring, the connector, and the measurement machine to the following work.

State of Machine	Cause	Check point	Content of confirmation	Troubleshooting
1. The fun does not run.	1) The power-supply voltage is abnormal.	The value of power-supply voltage is confirmed. (TB IN)	Is the power-supply voltage 342-457V?	The power supply wiring is confirmed, and corrected.
	2) Connected mistake	The fan controller connection is confirmed.	TB IN-NF wiring	The wiring mistake is corrected.
			TB IN-T01-CN02.	
			NF-SCRM-TB OUT	
			CNU, CNV, CNW-SCRM (The connection is noted.)	
			CN02- thermistor	
		The unit side connection is confirmed.	TB OUT - fan motor	
	3) The transformer (T01) is defective.	The resistance is confirmed. (Between the lines of primary side, and lines of secondary side.)	Resistance between the lines of primary side (red and white) about 310 ohm.	Replace the transformer in case of abnormal resistance.
			Resistance between the lines of secondary side (CN02 the connector is removed from the printing wiring board.) Between 1-3 pin about 0.9 ohm	
	4) The thyristor module (SCRM) is defective.	The content of P15 is checked. (SCRM)	The content of P15 is judgment. (SCRM)	Replace SCRM when abnormality is found.
	5) The control printing wiring board is defective.	The blinking of LED01 is confirmed.	After checking item 1)-4), when the power supply is turned on, the blinking of LED01 is confirmed.	At the time of turning on light. (always) The CN01 connector is removed, and measures resistance. When the resistance is 1 kilo-ohm or less, repair the control printing board due to the thermistor short-circuit breakdown. In case of thermistor is correct, the control printing board is defective and exchange.
				At the time of turning off light. The CN01 connector is removed, and measures resistance. When the resistance is 25 kilo-ohm or more, repair the control printing board due to the thermistor open breakdown. In case of thermistor is correct, the control printing board is defective and exchange.
	6) The fan motor and unit side control box are defective.	Fan power supply wiring is connected with fan controller power supply taking out part, and confirm operation.	Whether the voltage is input to fan motor is confirmed. Whether the fan motor operation is confirmed.	When the voltage impression and fan motor does not work, fan motor is defective. When the voltage is not impressed to the fan, the unit side control box is defective. When there is no wrong above-mentioned, it is assumed fan controller connection state, if abnormality relapses, the control printing board is defective and exchange.

State of Machine	Cause	Check point	Content of confirmation	Troubleshooting
2. The fan rotates oppositely.	1) Power supply reverse-phase.	The phase of input voltage is confirmed. (TB IN)	Is the phase of L1, L2, L3 correct?	The phase of L1, L2,L3 is corrected.
	2) Output wiring supply reverse-phase.	The phase of fan motor output wiring is confirmed. (TB OUT)	Is the phase of U, V, W correct?	The phase of U, V, W is corrected.
	3) Connected mistake	The fan controller connection is confirmed.	TB IN-NF wiring (The connection phase is noted.)	The connected phase is confirmed. The wiring mistake is corrected.
			NF-SCRM-TB OUT (The connection phase is noted.)	
			CNU, CNV, CNW-SCRM (The connection is noted.)	
3. The rotation speed of fans cannot control. •Something wrong occurs by step2-2 drive confirmation of installed confirmation matter. •It becomes high-pressure abnormal pressure.	1) During heating drive	The input voltage is confirmed. (CN04)	Is not AC198-264V input in CN04?	During heating drive, there is an input in CN04 and the fan becomes full load drive. → Normality
	2) Power supply reverse-phase. Output wiring reverse-phase.	The phase of input voltage is confirmed. (TB IN)	Is the phase of L1, L2, L3 correct?	The phase of L1, L2,L3 is corrected.
		The phase of fan motor output wiring is confirmed. (TB OUT)	Is the phase of U, V, W correct?	The phase of U, V, W is corrected.
	3) Connected mistake	The fan controller connection is confirmed.	TB IN-NF wiring (The connection phase is noted.)	The connected phase is confirmed. The wiring mistake is corrected.
			TB IN-T01-CN02 (The connection phase is noted.)	
			NF-SCRM-TB OUT (The connection phase is noted.)	
			CNU, CNV, CNW-SCRM (The connection is noted.)	
			CN02- thermistor	
			CN04- the wiring for full load input in heating (CN04 input is AC198-264V in heating.)	In cooling, when there is an input in CN04, wiring of CN04 is mistake connection. The wiring is corrected.
			There must not be connector connection in CNX. (CNX is compulsion full load input. Full load when short-circuited.)	When there is a connector connection in CNX, it is removed.
		The unit side connection is confirmed.	TB OUT - fan motor (The phase (U, V, W) is noted.)	The connected phase is confirmed. The wiring mistake is corrected.
			Position of the wiring for full load input (In heating)	When there is an input in CN04, the fan is full load.
			Installation position of thermistor	If the position where the thermistor is installed is wrong, the rotation speed control of the fan as condensing temperature is impossible.
	4) The control printing wiring board setting is defective.	The set of dip switch is confirmed. (SW0-3) (P2)	It is confirmed that the switch setting is corresponding to the electric wiring diagram.	The control substrate is matched to setting the electric wiring diagram.
	5) The thyristor module (SCRM) is defective.	The content of P14 is checked. (SCRM)	The content of P14 is judgment. (SCRM)	SCRM exchange when abnormality is found.

State of Machine	Cause	Check point	Content of confirmation	Troubleshooting
	6) The control printing wiring board is defective.	The blinking of LED01 is confirmed.	After checking item 1)-5), when the power supply is turned on, the blinking of LED01 is confirmed.	At the time of turning on light (always) (There is a possibility of the thermistor short-circuit.) The CN01 connector is removed, and measures resistance. When the resistance is 1 kilo-ohm or less, repair the control printing board due to the thermistor short-circuit breakdown. In case of thermistor is correct, the control printing board is defective and exchange.
				At the time of turning off light (There is a possibility of the thermistor open breakdown.) The CN01 connector is removed, and measures resistance. When the resistance is 25 kilo-ohm or more, repair the control printing board due to the thermistor open breakdown. In case of thermistor is correct, the control printing board is defective and exchange.
				At the time of blinking The item 2), 3) are confirmed again, and there is no connection mistake, the control printing board is defective and exchange.
4. The fan never becomes full load drive. (In heating)	1) Connected mistake	The fan controller connection is confirmed.	TB IN-NF wiring	It is confirmed that wiring is correctly connected. The wiring mistake is corrected.
			TB IN-T01-CN02	
			NF-SCRM-TB OUT	
			CNU, CNV, CNW-SCRM (The connection is noted.)	
			CN04- the wiring for full load input (CN04 input is AC198-264V in heating.)	
		The unit side connection is confirmed.	Position of the wiring for full load input (In heating)	The wiring mistake is corrected.
	2) The thyristor module (SCRM) is defective.	The content of P14 is checked. (SCRM)	The content of P14 is judgment. (SCRM)	Replace SCRM when abnormality is found.
	3) The control printing wiring board is defective.	After checking item 1), there is a possibility of a defective printed circuit board if a normal drive is not done.	Item 1) is checked, again.	After checking item 1), if there is no problem, the control printing board is defective and exchange.

Thyristor module (SCRM)

<Judgment Method> Measure the resistance between each of the SCRM pins and judge if there is a failure or not by the resulting values.

<Judgment Values 1> Check between G and K.
Use the smallest resistance range on the tester.
Judgment Value: 1.5 ohm ～ 80 ohm

<Judgment Values 2> Check between AK1 and AK2.
Use the greatest resistance range on the tester.
Judgment Value: 60 kilo-ohm ～ ∞ ohm

<External View>

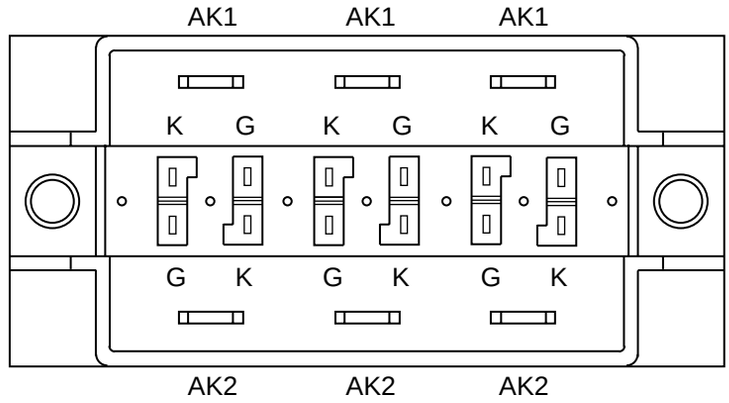

<Internal Circuit Diagrams>

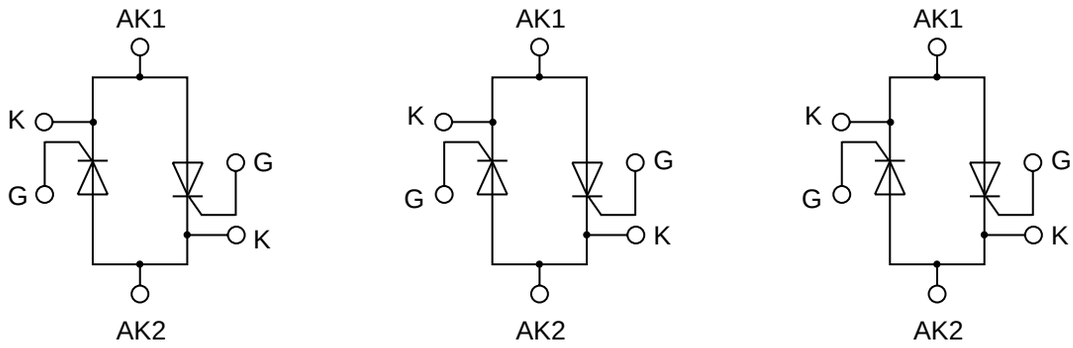

DATA BOOK PRHG

MITSUBISHI ELECTRIC CORPORATION
HEAD OFFICE DENKI BLDG., MARUNOUCHI,TOKYO 100-0005,TELEX J24532 CABLE MELCO TOKYO

Issuued in Oct. 2001 MEE01K069
Printed in Japan.

New publication effective Oct. 2001.
Specifications subject to change without notice.