A.7 OUTDOOR UNIT

A.7.1 FEATURES A-312
A.7.2 ELECTRICAL DATA A-313
A.7.3 OUTLINES AND DIMENTIONS A-317
A.7.4 WIRING DIAGRAM A-322
A.7.5 NOISE CRITERION CURVES A-327
A.7.6 INSTALLATION PROCEDURE A-331
A.7.7 CENTER OF GRAVITY POSITION A-333
A.7.8 SAFETY DEVICE SETTINGS A-334

Back to Index page

A.7.1 FEATURES

- **Refrigerant R407C models**

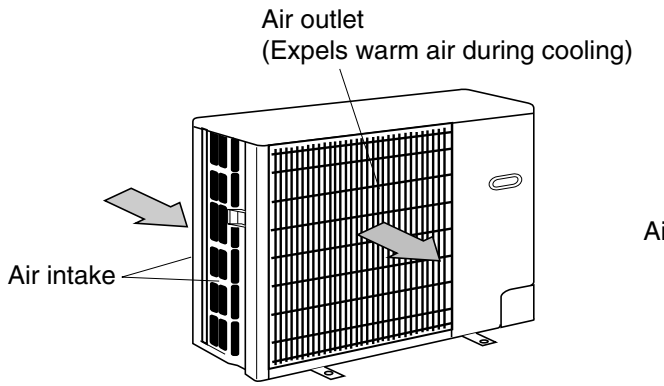

PU(H)-P1, P1.6

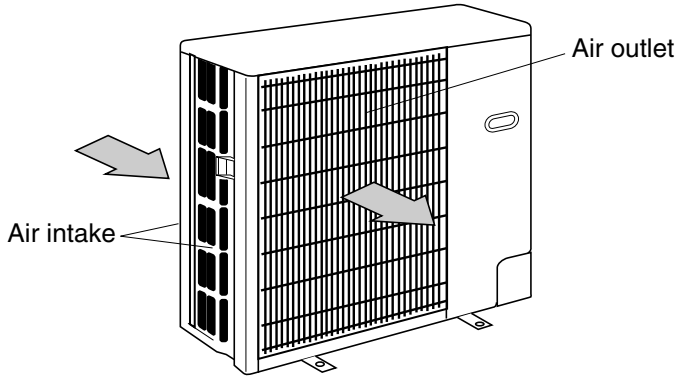

PU(H)-P2, P2.5, P3

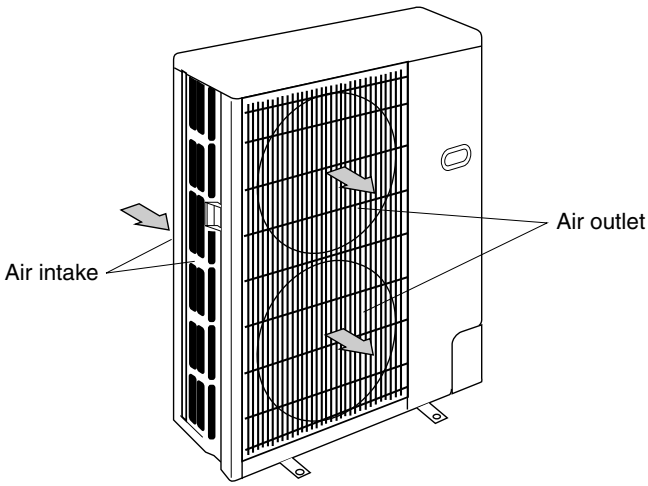

PU(H)-P4

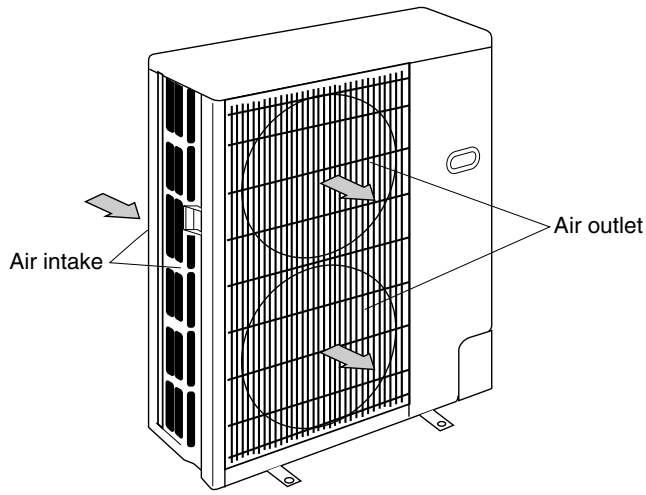

PU(H)-P5, P6

1. Chargeless refrigerant system
2. Easy service and maintenance features
3. Slimmer refrigerant piping
4. Microprocessor control of various function
5. Sound of silence

A.7.2 ELECTRICAL DATA

Rating conditions — Cool : Indoor : 27℃ D.B., 19℃ W.B. Heat : Indoor : 20℃ D.B., 15℃ W.B.
Outdoor : 35℃ D.B., 24℃ W.B. Outdoor : 7℃ D.B., 6℃ W.B.

Outdoor unit ... 220V 50Hz Single phase

Model		**PUH-P1VGAA**		**PUH-P1.6VGAA**		**PUH-P2VGAA**		**PUH-P2.5VGAA**	
Mode		Cool	Heat	Cool	Heat	Cool	Heat	Cool	Heat
Starting current	A	27	27	33	33	62	62	71	71
Current	A	5.37	4.93	8.03	8.28	11.19	11.53	12.98	12.56

Outdoor unit ... 230V 50Hz Single phase

Model		**PUH-P1VGAA**		**PUH-P1.6VGAA**		**PUH-P2VGAA**		**PUH-P2.5VGAA**	
Mode		Cool	Heat	Cool	Heat	Cool	Heat	Cool	Heat
Starting current	A	29	29	35	35	62	62	74	74
Current	A	5.13	4.72	7.68	7.92	10.71	11.03	12.42	12.01

Outdoor unit ... 240V 50Hz Single phase

Model		**PUH-P1VGAA**		**PUH-P1.6VGAA**		**PUH-P2VGAA**		**PUH-P2.5VGAA**	
Mode		Cool	Heat	Cool	Heat	Cool	Heat	Cool	Heat
Starting current	A	30	30	36	36	62	62	77	77
Current	A	4.92	4.52	7.36	7.59	10.26	10.57	11.90	11.51

Rating conditions — Cool : Indoor : 27℃ D.B., 19℃ W.B. Heat : Indoor : 20℃ D.B., 15℃ W.B.
Outdoor : 35℃ D.B., 24℃ W.B. Outdoor : 7℃ D.B., 6℃ W.B.

Outdoor unit ... 220V 50Hz Single phase

Model		**PUH-P3VGAA**		**PUH-P4VGAA**	
Mode		Cool	Heat	Cool	Heat
Starting current	A	85	85	91	91
Current	A	16.16	17.19	17.13	18.08

Outdoor unit ... 230V 50Hz Single phase

Model		**PUH-P3VGAA**		**PUH-P4VGAA**	
Mode		Cool	Heat	Cool	Heat
Starting current	A	89	89	95	95
Current	A	15.45	16.45	16.39	17.30

Outdoor unit ... 240V 50Hz Single phase

Model		**PUH-P3VGAA**		**PUH-P4VGAA**	
Mode		Cool	Heat	Cool	Heat
Starting current	A	93	93	99	99
Current	A	14.81	15.76	15.71	16.58

Rating conditions — Cool : Indoor : 27℃ D.B., 19℃ W.B. Heat : Indoor : 20℃ D.B., 15℃ W.B.
Outdoor : 35℃ D.B., 24℃ W.B. Outdoor : 7℃ D.B., 6℃ W.B.

Outdoor unit ... 380V 50Hz 3 phases

Model		**PUH-P1.6YGAA**		**PUH-P2YGAA**		**PUH-P2.5YGAA**		**PUH-P3YGAA**	
Mode		Cool	Heat	Cool	Heat	Cool	Heat	Cool	Heat
Starting current	A	18	18	31	31	32	32	43	43
Current	A	2.71	2.80	4.05	4.17	4.89	4.73	5.78	6.15

Outdoor unit ... 400V 50Hz 3 phases

Model		**PUH-P1.6YGAA**		**PUH-P2YGAA**		**PUH-P2.5YGAA**		**PUH-P3YGAA**	
Mode		Cool	Heat	Cool	Heat	Cool	Heat	Cool	Heat
Starting current	A	19	19	31	31	34	34	45	45
Current	A	2.58	2.66	3.84	3.96	4.65	4.50	5.49	5.84

Outdoor unit ... 415V 50Hz 3 phases

Model		**PUH-P1.6YGAA**		**PUH-P2YGAA**		**PUH-P2.5YGAA**		**PUH-P3YGAA**	
Mode		Cool	Heat	Cool	Heat	Cool	Heat	Cool	Heat
Starting current	A	20	20	31	31	35	35	47	47
Current	A	2.49	2.56	3.70	3.82	4.48	4.34	5.29	5.63

Rating conditions — Cool : Indoor : 27℃ D.B., 19℃ W.B. Heat : Indoor : 20℃ D.B., 15℃ W.B.
Outdoor : 35℃ D.B., 24℃ W.B. Outdoor : 7℃ D.B., 6℃ W.B.

Outdoor unit ... 380V 50Hz 3 phases

Model		**PUH-P4YGAA**		**PUH-P5YGAA**		**PUH-P6YGAA**	
Mode		Cool	Heat	Cool	Heat	Cool	Heat
Starting current	A	44	44	65.5	65.5	74	74
Current	A	6.06	6.40	8.30	8.90	9.86	10.44

Outdoor unit ... 400V 50Hz 3 phases

Model		**PUH-P4YGAA**		**PUH-P5YGAA**		**PUH-P6YGAA**	
Mode		Cool	Heat	Cool	Heat	Cool	Heat
Starting current	A	47	47	65.5	65.5	74	74
Current	A	5.76	6.08	7.89	8.46	9.37	9.92

Outdoor unit ... 415V 50Hz 3 phases

Model		**PUH-P4YGAA**		**PUH-P5YGAA**		**PUH-P6YGAA**	
Mode		Cool	Heat	Cool	Heat	Cool	Heat
Starting current	A	49	49	65.5	65.5	74	74
Current	A	5.55	5.86	7.60	8.15	9.03	9.56

Rating conditions — Cool : Indoor : 27℃ D.B., 19℃ W.B.
Outdoor : 35℃ D.B., 24℃ W.B.

Outdoor unit ... 220V 50Hz Single phase

Model		PU-P1.6VGAA	PU-P2VGAA	PU-P2.5VGAA	PU-P3VGAA	PU-P4VGAA
Mode		Cool	Cool	Cool	Cool	Cool
Starting current	A	33	62	71	85	91
Current	A	8.03	11.19	12.98	16.16	17.13

Outdoor unit ... 230V 50Hz Single phase

Model		PU-P1.6VGAA	PU-P2VGAA	PU-P2.5VGAA	PU-P3VGAA	PU-P4VGAA
Mode		Cool	Cool	Cool	Cool	Cool
Starting current	A	35	62	74	89	95
Current	A	7.68	10.71	12.42	15.45	16.39

Outdoor unit ... 240V 50Hz Single phase

Model		PU-P1.6VGAA	PU-P2VGAA	PU-P2.5VGAA	PU-P3VGAA	PU-P4VGAA
Mode		Cool	Cool	Cool	Cool	Cool
Starting current	A	36	62	77	93	99
Current	A	7.36	10.26	11.90	14.81	15.71

Rating conditions — Cool : Indoor : 27℃ D.B., 19℃ W.B.
Outdoor : 35℃ D.B., 24℃ W.B.

Outdoor unit ... 380V 50Hz 3 phases

Model		PU-P1.6YGAA	PU-P2YGAA	PU-P2.5YGAA	PU-P3YGAA	PU-P4YGAA	PU-P5YGAA	PU-P6YGAA
Mode		Cool	Cool	Cool	Cool	Cool	Cool	Cool
Starting current	A	18	31	32	43	44	65.5	74
Current	A	2.71	4.05	4.89	5.78	6.06	8.30	9.86

Outdoor unit ... 400V 50Hz 3 phases

Model		PU-P1.6YGAA	PU-P2YGAA	PU-P2.5YGAA	PU-P3YGAA	PU-P4YGAA	PU-P5YGAA	PU-P6YGAA
Mode		Cool	Cool	Cool	Cool	Cool	Cool	Cool
Starting current	A	19	31	34	45	47	65.5	74
Current	A	2.58	3.84	4.65	5.49	5.76	7.89	9.37

Outdoor unit ... 415V 50Hz 3 phases

Model		PU-P1.6YGAA	PU-P2YGAA	PU-P2.5YGAA	PU-P3YGAA	PU-P4YGAA	PU-P5YGAA	PU-P6YGAA
Mode		Cool	Cool	Cool	Cool	Cool	Cool	Cool
Starting current	A	20	31	35	47	49	65.5	74
Current	A	2.49	3.70	4.48	5.29	5.55	7.60	9.03

Rating conditions — Cool : Indoor : 27℃ D.B., 19℃ W.B.
Outdoor : 35℃ D.B., —℃ W.B.

Heat : Indoor : 20℃ D.B., —℃ W.B.
Outdoor : 7℃ D.B., 6℃ W.B.

Outdoor unit ... 380V 50Hz 3 phases

Model	**PUH-P8YE**		**PUH-P10YE**	
Mode	Cool	Heat	Cool	Heat
Starting current (A)	110	110	133	133
Current (A)	13.0	12.8	16.0	15.4

Outdoor unit ... 400V 50Hz 3 phases

Model	**PUH-P8YE**		**PUH-P10YE**	
Mode	Cool	Heat	Cool	Heat
Starting current (A)	110	110	133	133
Current (A)	13.0	12.8	16.0	15.4

Outdoor unit ... 415V 50Hz 3 phases

Model	**PUH-P8YE**		**PUH-P10YE**	
Mode	Cool	Heat	Cool	Heat
Starting current (A)	110	110	133	133
Current (A)	13.0	12.8	16.0	15.4

A.7.3 OUTLINES AND DIMENTIONS

PUH-P1VGAA
PUH-P1.6VGAA, PU-P1.6VGAA
PUH-P1.6YGAA

Unit: mm

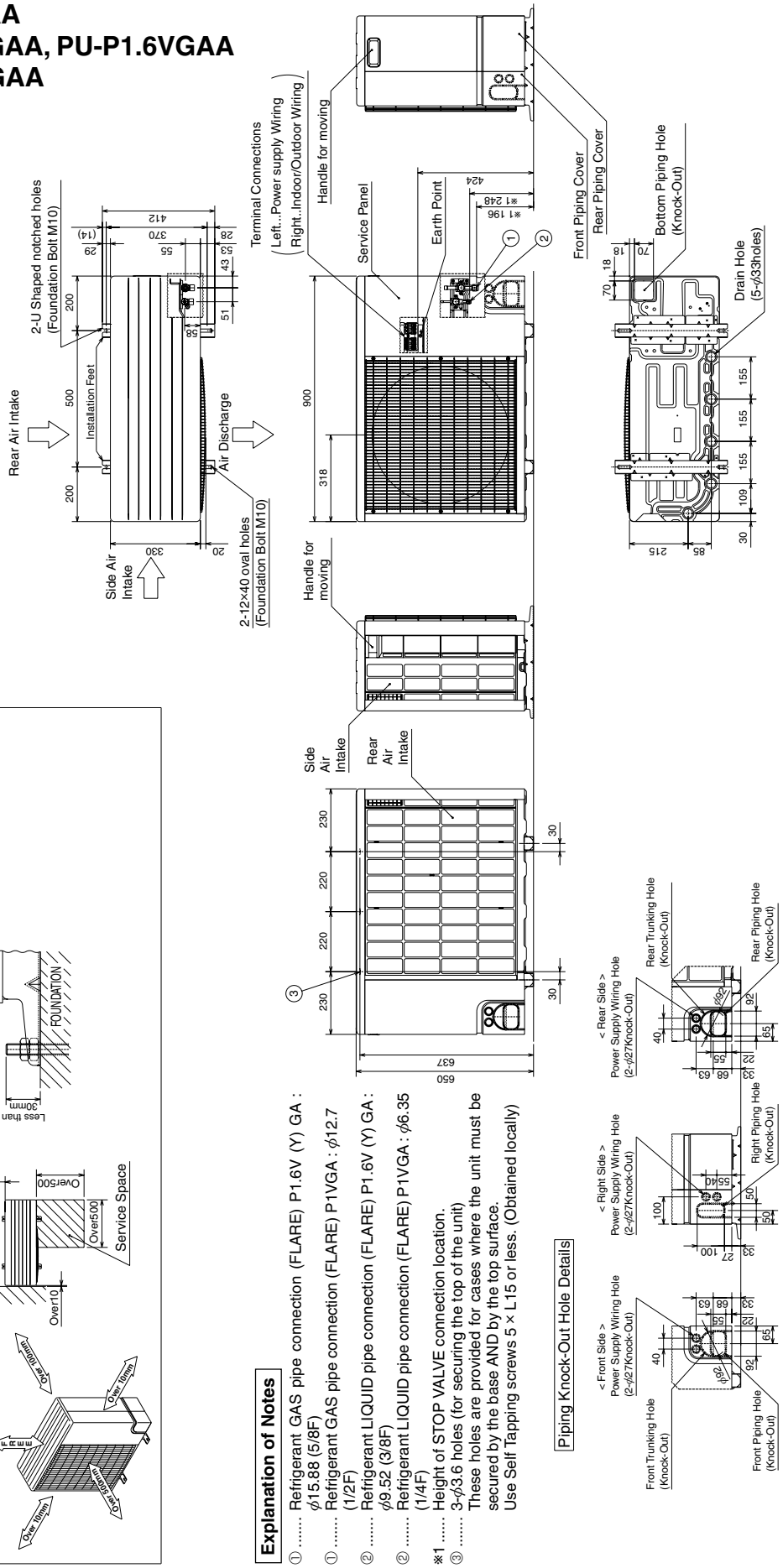

PUH-P2VGAA, PU-P2VGAA
PUH-P2YGAA, PU-P2YGAA
PUH-P2.5VGAA, PU-P2.5VGAA
PUH-P2.5YGAA, PU-P2.5YGAA
PUH-P3VGAA
PUH-P3YGAA
PU-P3VGAA
PU-P3YGAA

Unit: mm

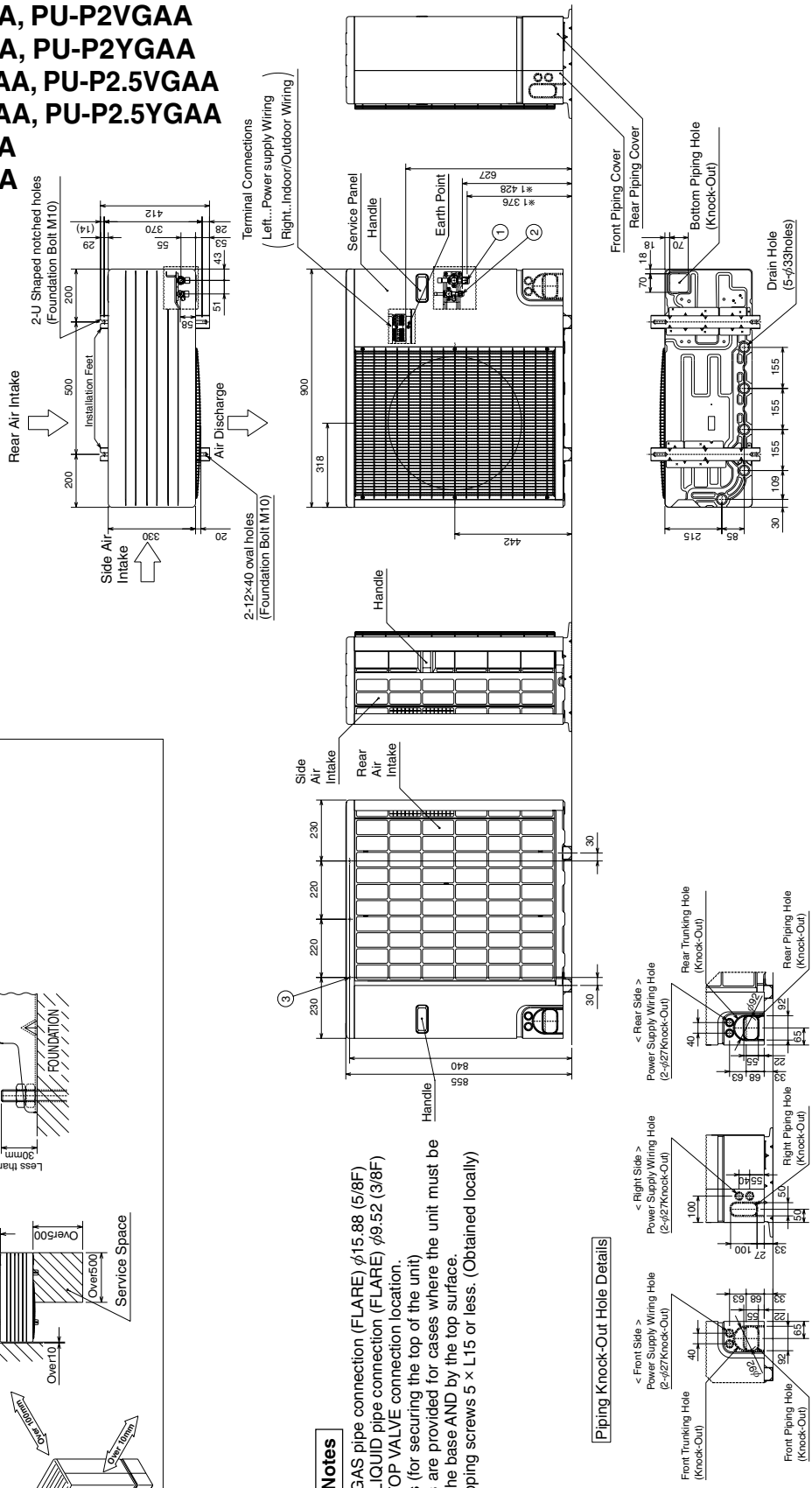

1 FREE SPACE (Around the Unit)

The diagram below shows a basic example.
Explanation of particular details are given in the installation manuals etc.

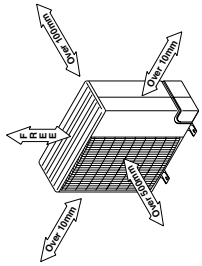

2 SERVICE SPACE

Dimensions of space needed for service access are shown in the below diagram.

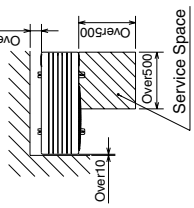

3 FOUNDATION BOLTS

Please secure the unit firmly with 4 foundation (M10) bolts. (Bolts and washers must be purchased locally).

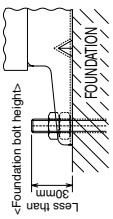

4 PIPING-WIRING DIRECTIONS

Piping and wiring connections can be made from 4 directions: Front, Right, Rear and Below.

Explanation of Notes

① ..... Refrigerant GAS pipe connection (FLARE) φ15.88 (5/8F)
② ..... Refrigerant LIQUID pipe connection (FLARE) φ9.52 (3/8F)
※1 ..... Height of STOP VALVE connection location.
③ ..... 3-φ3.6 holes (for securing the top of the unit)
These holes are provided for cases where the unit must be secured by the base AND by the top surface.
Use Self Tapping screws 5 × L15 or less. (Obtained locally)

PUH-P4VGAA, PU-P4VGAA
PUH-P4YGAA, PU-P4YGAA

Unit: mm

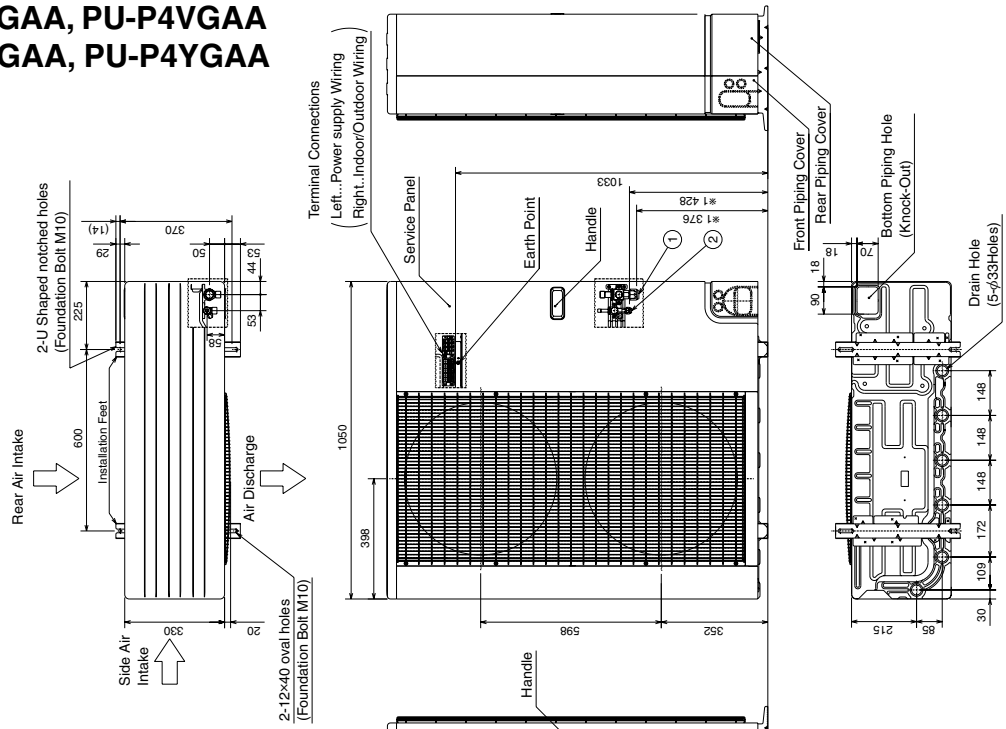

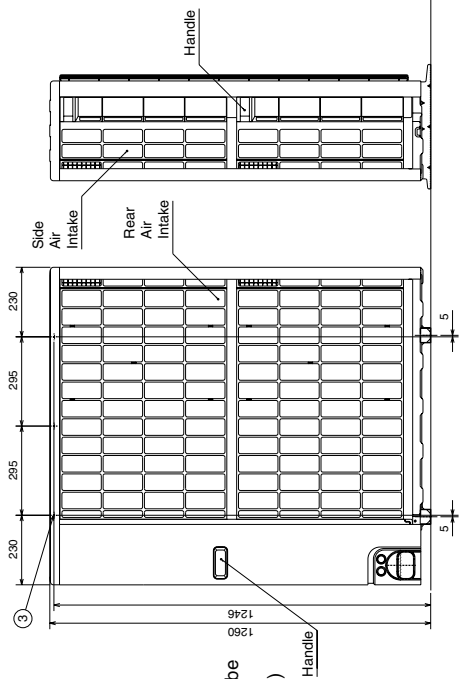

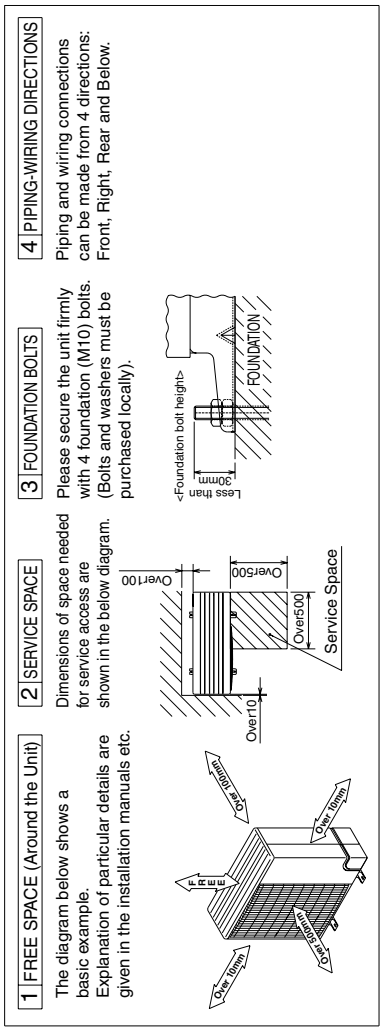

Explanation of Notes

① ..... Refrigerant GAS pipe connection (FLARE) φ19.05 (3/4F)
② ..... Refrigerant LIQUID pipe connection (FLARE) φ9.52 (3/8F)
※1 ..... Height of STOP VALVE connection location.
③ ..... 3-φ3.6 holes (for securing the top of the unit)
These holes are provided for cases where the unit must be secured by the base AND by the top surface.
Use Self Tapping screws 5 × L15 or less. (Obtained locally)

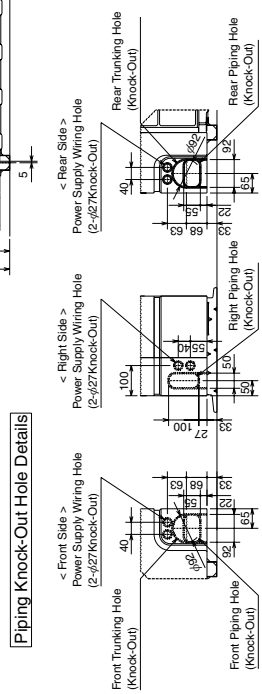

PUH-P5YGAA, PU-P5YGAA
PUH-P6YGAA, PU-P6YGAA

Unit: mm

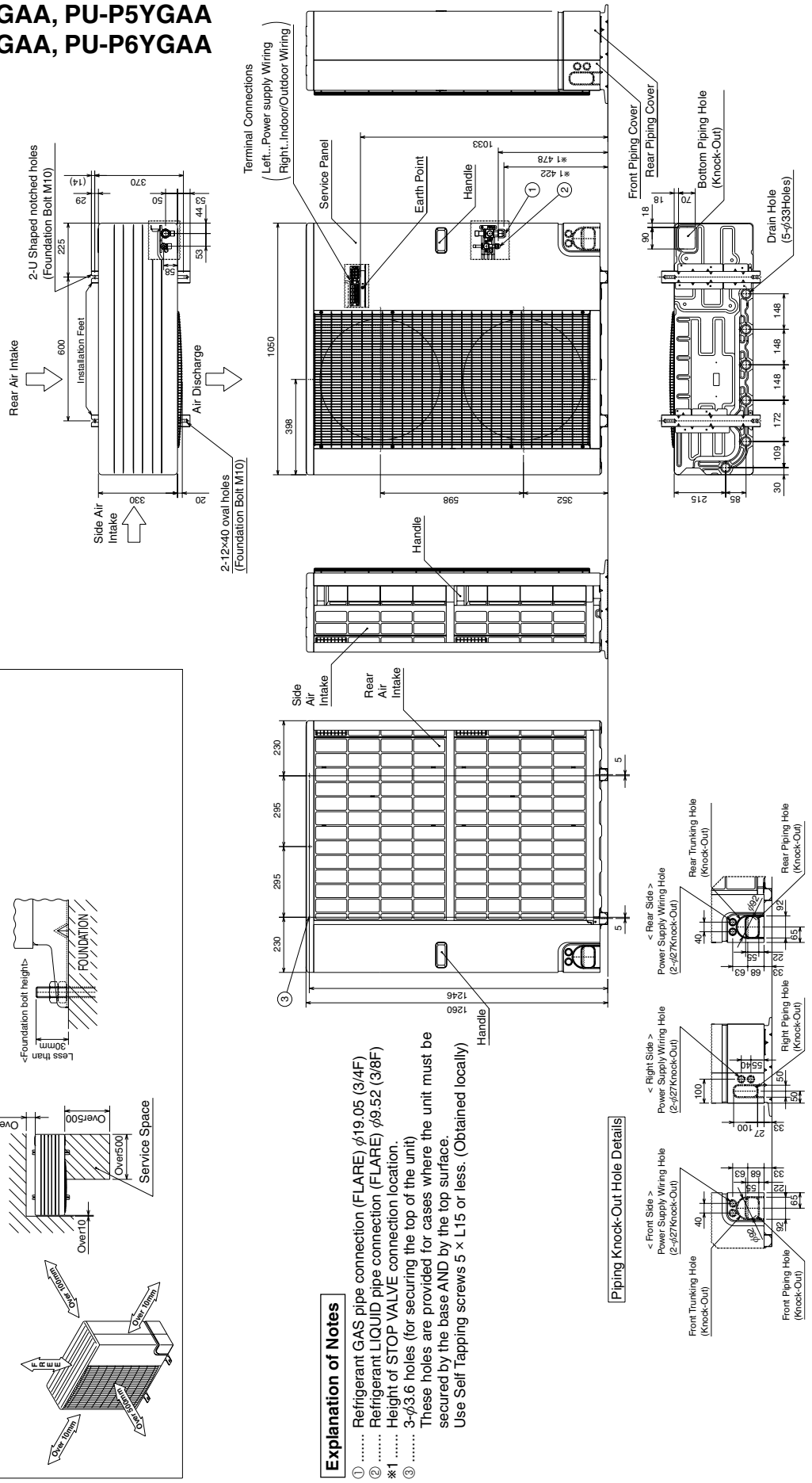

Explanation of Notes

① ..... Refrigerant GAS pipe connection (FLARE) φ19.05 (3/4F)
② ..... Refrigerant LIQUID pipe connection (FLARE) φ9.52 (3/8F)
※1 ..... Height of STOP VALVE connection location.
③ ..... 3-φ3.6 holes (for securing the top of the unit)
These holes are provided for cases where the unit must be secured by the base AND by the top surface.
Use Self Tapping screws 5 × L15 or less. (Obtained locally)

1 FREE SPACE (Around the Unit)

The diagram below shows a basic example.
Explanation of particular details are given in the installation manuals etc.

2 SERVICE SPACE

Dimensions of space needed for service access are shown in the below diagram.

3 FOUNDATION BOLTS

Please secure the unit firmly with 4 foundation (M10) bolts. (Bolts and washers must be purchased locally).

4 PIPING-WIRING DIRECTIONS

Piping and wiring connections can be made from 4 directions: Front, Right, Rear and Below.

OUTDOOR UNIT

OUTLINES AND DIMENTIONS

PUH-P8YE, PUH-P10YE

Unit: mm

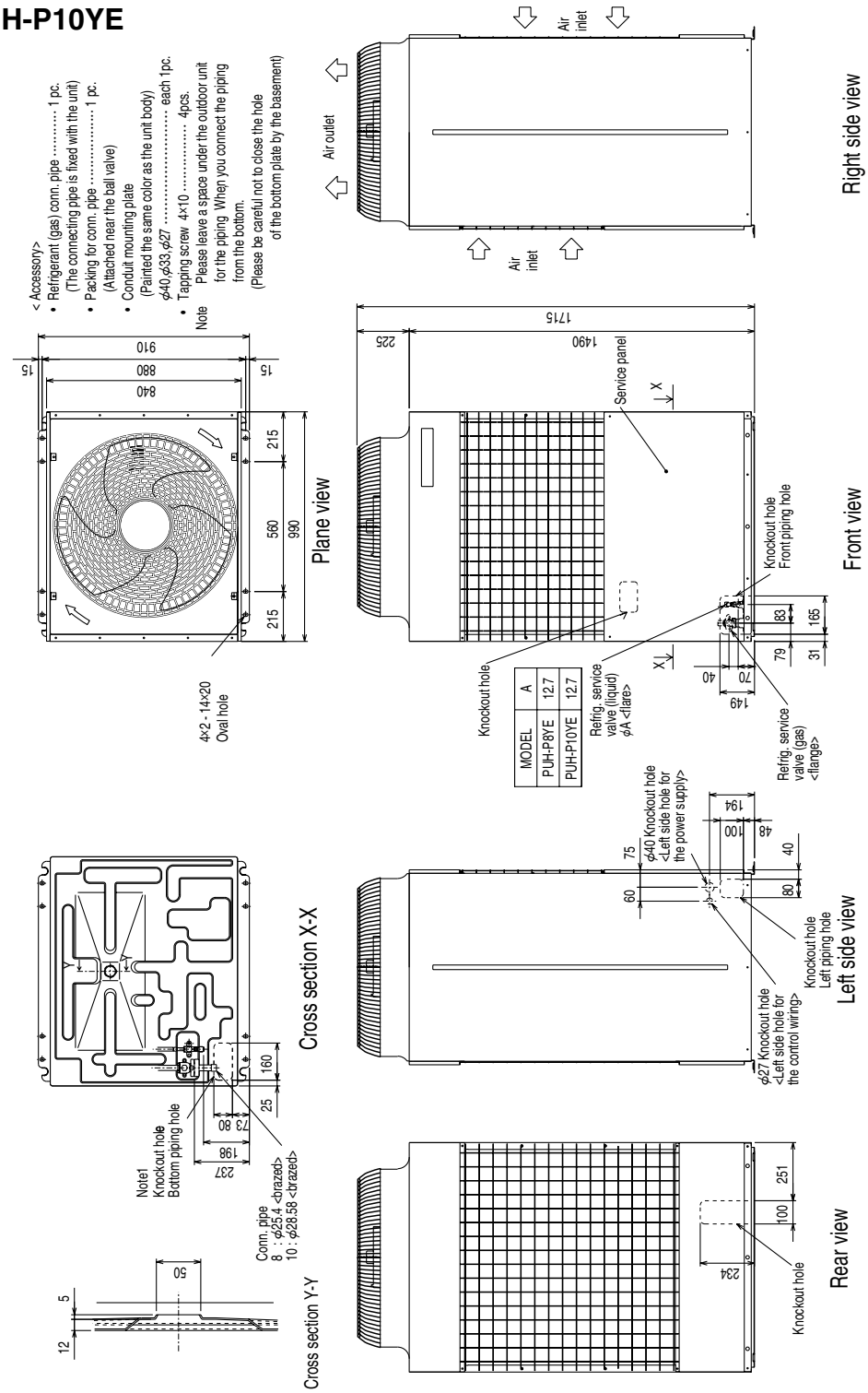

A.7.4 WIRING DIAGRAM

PUH-P1/P1.6/P2/P2.5/P3/P4VGAA

SYMBOL	NAME		SYMBOL	NAME
MC	COMPRESSOR (INNER THERMOSTAT)		OB	OUTDOOR CONTROLLER BOARD
MF	FAN MOTOR (INNER THERMOSTAT)		FUSE1	FUSE (6.3A)
TH3	THERMISTOR	LIQUID TEMPERATURE	FUSE2	FUSE (6.3A)
TH4		DISCHARGE TEMPERATURE	FUSE3	FUSE (6.3A)
TH6		CONDENSER/EVAPORATOR TEMPERATURE	FUSE4	FUSE (6.3A)
			X51	MC/CH RELAY
C3	MF CAPACITOR		X52	21S4 RELAY
C4	MF CAPACITOR		F.C	FAN CONTROLLER
C5	MC CAPACITOR		SW1	GROUP NUMBER ADDRESS
CH	CRANKCASE HEATER		SW4	TEST RUN
52C	MC CONTACTOR		SW5	FUNCTION SELECTION
21S4	4-WAY VALVE SOLENOID COIL		J1~J6	MODEL SELECTION
63H	HIGH PRESSURE PROTECT SWITCH		T	TRANSFORMER
49C	INNER THERMOSTAT FOR MC		CT	CURRENT TRANSFORMER
TB1	TERMINAL BLOCK		LED1	OPERATION CHECK DISPLAY LED
LEV	LINEAR EXPANSION VALVE		LED2	OPERATION CHECK DISPLAY LED
TB2	TERMINAL BLOCK		CN31	EMERGENCY OPERATION CONNECTOR

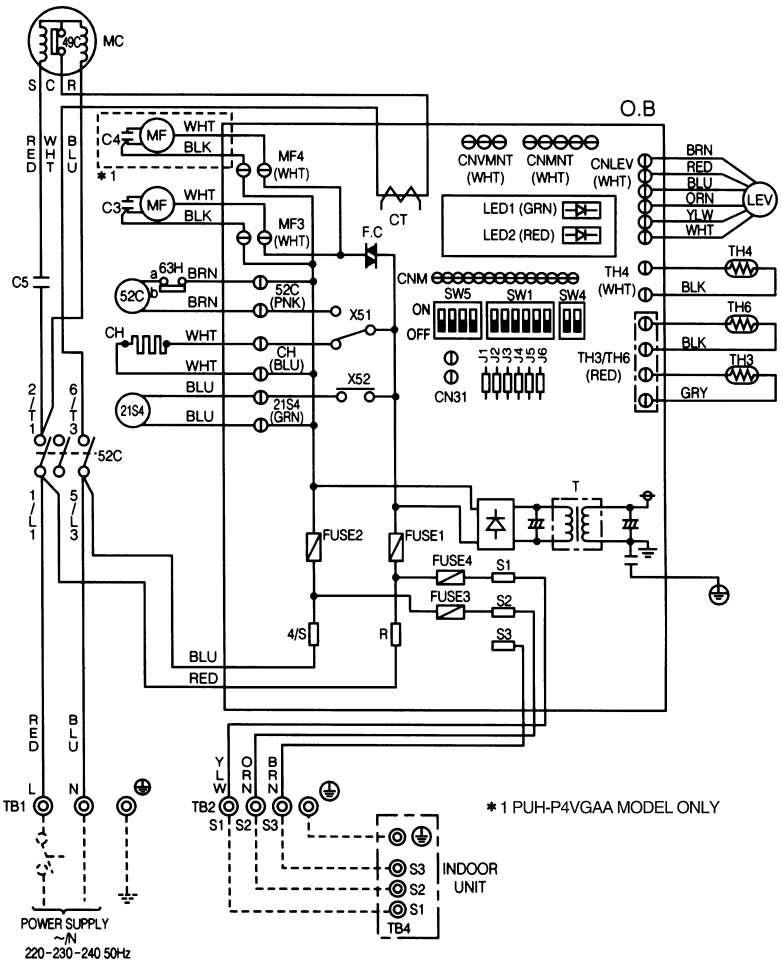

<Notes when servicing>
Some fastening terminals have a lock mechanism: When removing the fastening terminal, push the projection (locking lever) on the terminal with your finger and pull it out.

PUH-P1.6/P2/P2.5/P3/P4/P5/P6YGAA

SYMBOL	NAME		SYMBOL	NAME
MC	COMPRESSOR		OB	OUTDOOR CONTROLLER BOARD
MF	FAN MOTOR (INNER THERMOSTAT)		FUSE1	FUSE (6.3A)
TH3	THERMISTOR	LIQUID TEMPERATURE	FUSE2	FUSE (6.3A)
TH4		DISCHARGE TEMPERATURE	FUSE3	FUSE (6.3A)
TH6		CONDENSER/EVAPORATOR TEMPERATURE	FUSE4	FUSE (6.3A)
			X51	MC/CH RELAY
C3	MF CAPACITOR		X52	21S4 RELAY
C4	MF CAPACITOR		X53	SV RELAY
CH	CRANKCASE HEATER		F.C	FAN CONTROLLER
52C	MC CONTACTOR		SW1	GROUP NUMBER ADDRESS
21S4	4-WAY VALVE SOLENOID COIL		SW4	TEST RUN
SV	BYPASS VALVE SOLENOID COIL		SW5	FUNCTION SELECTION
63H	HIGH PRESSURE PROTECT SWITCH		J1~J6	MODEL SELECTION
51C	THERMAL RELAY		T	TRANSFORMER
TB1	TERMINAL BLOCK		CT	CURRENT TRANSFORMER
LEV	LINEAR EXPANSION VALVE		LED1	OPERATION CHECK DISPLAY LED
TB2	TERMINAL BLOCK		LED2	OPERATION CHECK DISPLAY LED
			CN31	EMERGENCY OPERATION CONNECTOR

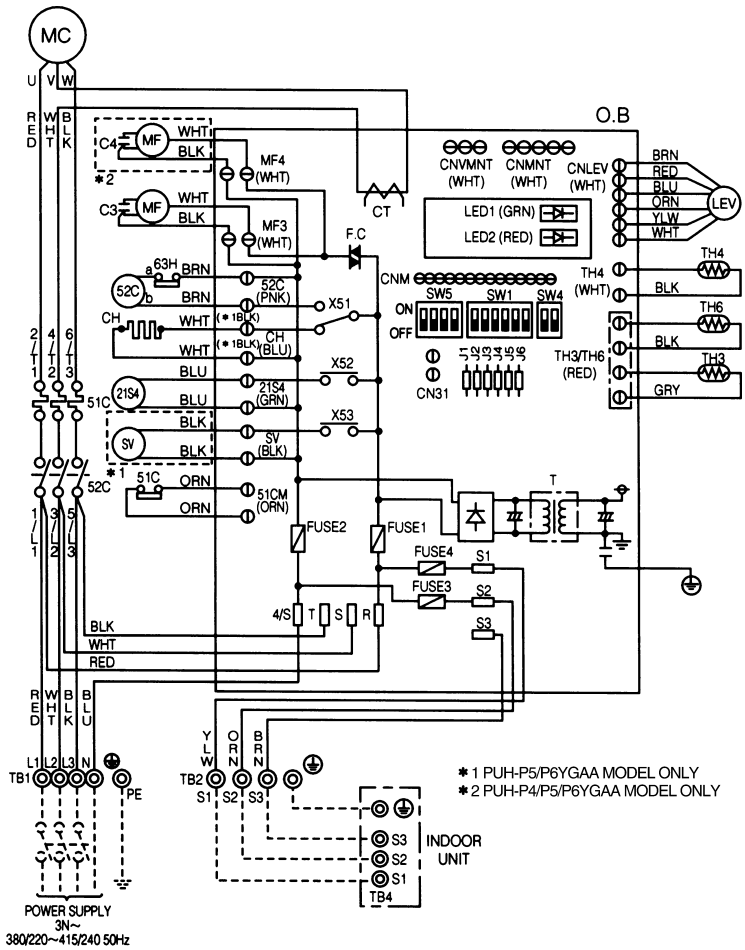

<Notes when servicing>
Some fastening terminals have a lock mechanism: When removing the fastening terminal, push the projection (locking lever) on the terminal with your finger and pull it out.

PU-P1.6/P2/P2.5/P3/P4VGAA

SYMBOL	NAME		SYMBOL	NAME
MC	COMPRESSOR (INNER THERMOSTAT)		OB	OUTDOOR CONTROLLER BOARD
MF	FAN MOTOR (INNER THERMOSTAT)		FUSE1	FUSE (6.3A)
TH3	THERMISTOR	LIQUID TEMPERATURE	FUSE2	FUSE (6.3A)
TH4		DISCHARGE TEMPERATURE	FUSE3	FUSE (6.3A)
TH6		CONDENSER TEMPERATURE	FUSE4	FUSE (6.3A)
C3	MF CAPACITOR		X51	MC/CH RELAY
C4	MF CAPACITOR		F.C	FAN CONTROLLER
C5	MC CAPACITOR		SW1	GROUP NUMBER ADDRESS
CH	CRANKCASE HEATER		SW4	TEST RUN
52C	MC CONTACTOR		SW5	FUNCTION SELECTION
63H	HIGH PRESSURE PROTECT SWITCH		J1~J6	MODEL SELECTION
49C	INNER THERMOSTAT FOR MC		T	TRANSFORMER
TB1	TERMINAL BLOCK		CT	CURRENT TRANSFORMER
LEV	LINEAR EXPANSION VALVE		LED1	OPERATION CHECK DISPLAY LED
TB2	TERMINAL BLOCK		LED2	OPERATION CHECK DISPLAY LED
			CN31	EMERGENCY OPERATION CONNECTOR

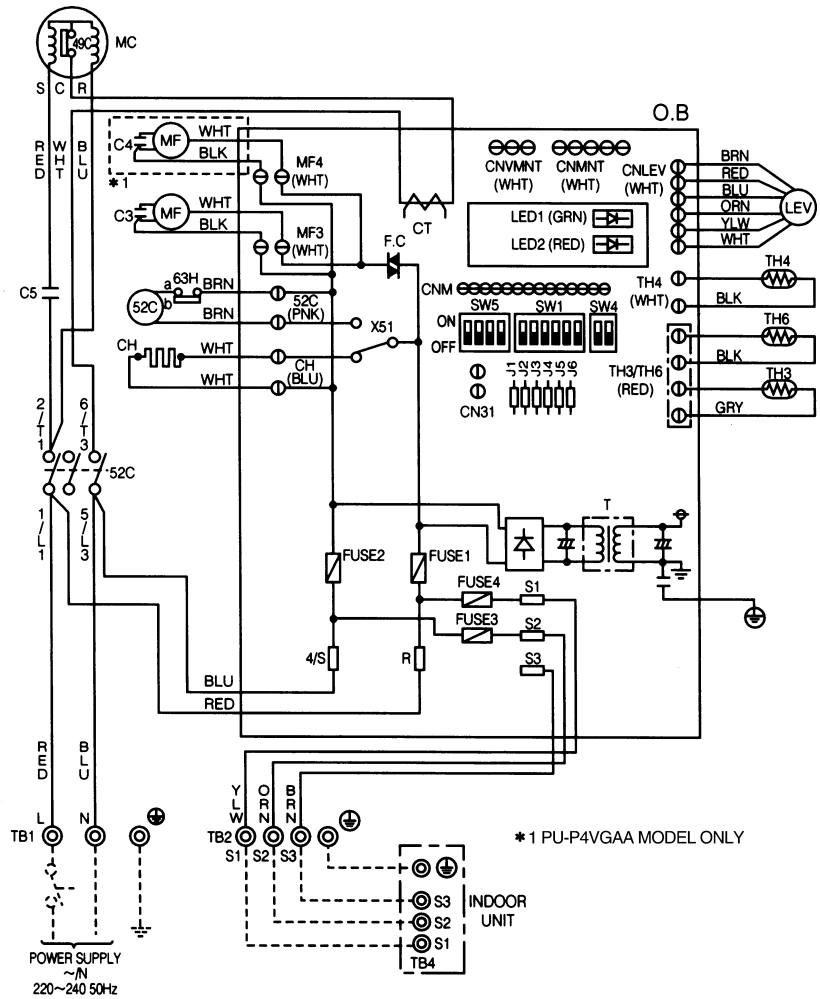

<Notes when servicing>
Some fastening terminals have a lock mechanism: When removing the fastening terminal, push the projection (locking lever) on the terminal with your finger and pull it out.

PU-P1.6/P2/P2.5/P3/P4/P5/P6YGAA

SYMBOL	NAME		SYMBOL	NAME
MC	COMPRESSOR		OB	OUTDOOR CONTROLLER BOARD
MF	FAN MOTOR (INNER THERMOSTAT)		FUSE1	FUSE (6.3A)
TH3	THERMISTOR	LIQUID TEMPERATURE	FUSE2	FUSE (6.3A)
TH4		DISCHARGE TEMPERATURE	FUSE3	FUSE (6.3A)
TH6		CONDENSER TEMPERATURE	FUSE4	FUSE (6.3A)
C3	MF CAPACITOR		X51	MC/CH RELAY
C4	MF CAPACITOR		F.C	FAN CONTROLLER
CH	CRANKCASE HEATER		SW1	GROUP NUMBER ADDRESS
52C	MC CONTACTOR		SW4	TEST RUN
63H	HIGH PRESSURE PROTECT SWITCH		SW5	FUNCTION SELECTION
51C	TERMINAL RELAY		J1~J6	MODEL SELECTION
TB1	TERMINAL BLOCK		T	TRANSFORMER
LEV	LINEAR EXPANSION VALVE		CT	CURRENT TRANSFORMER
TB2	TERMINAL BLOCK		LED1	OPERATION CHECK DISPLAY LED
			LED2	OPERATION CHECK DISPLAY LED
			CN31	EMERGENCY OPERATION CONNECTOR

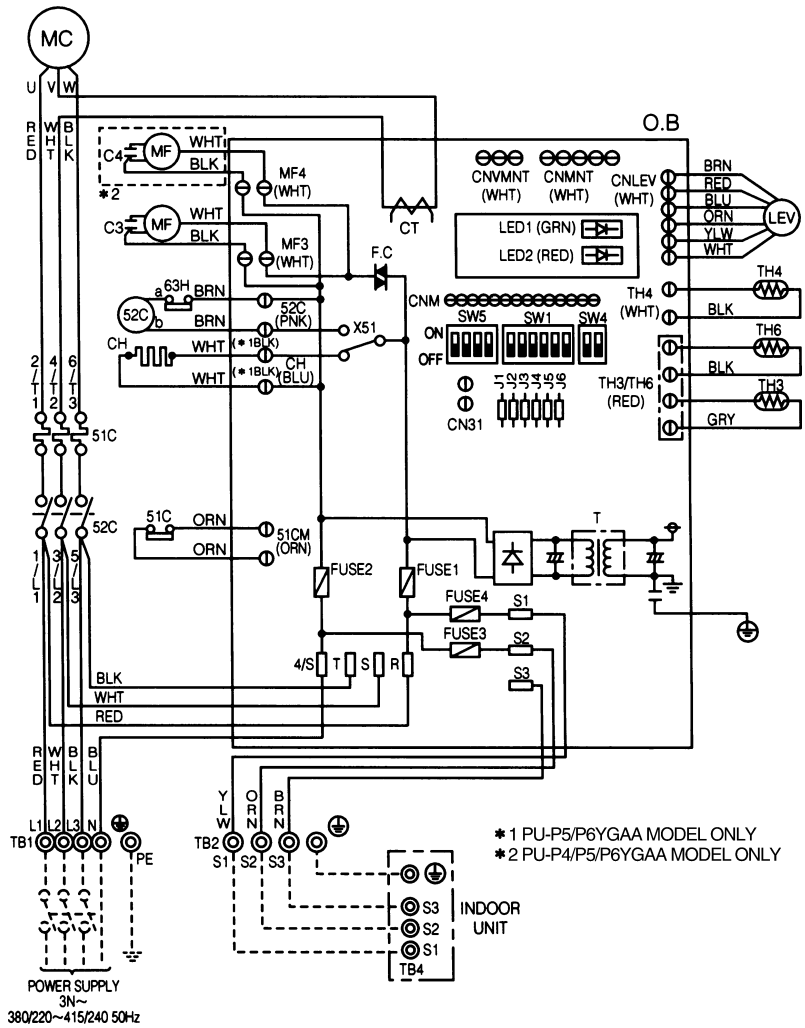

<Notes when servicing>
Some fastening terminals have a lock mechanism: When removing the fastening terminal, push the projection (locking lever) on the terminal with your finger and pull it out.

PUH-P8YE, PUH-P10YE

SYMBOL	NAME	SYMBOL	NAME	
F1, F2	FUSE (15A 250VAC CLASS T)	X01~X05	RELAY	
F01~F04	FUSE (6.3A 250VAC CLASS F)	SW1~5	SWITCH	
F10~F30	FUSE (6.3A 250VAC CLASS F)	21S4	4-WAY VALVE	
51C	OVER CURRENT RELAY	SV1	SORENOID VALVE	
52C	MAGNETIC CONTACTOR (COMPRESSOR)	LEV	ELECTRIC EXPANSION VALVE	
63L	PRESSURE SWITCH (LOW PRESSURE)	TH1	THERMISTOR	LIQUID TEMP
63H1	PRESSURE SWITCH (HIGH PRESSURE)	TH2		DISCHARGE TEMP
63H2	PRESSURE SWITCH (FOR CONTROL)	TH3		CONDENSER/EVAPORATOR TEMP
TR	TRANSFORMER	TB1	POWER SOURCE TERMINAL BLOCK	
MC	ELECTRIC MOTOR OF COMPRESSOR	TB3	INDOOR/OUTDOOR CONNECTION TERMINAL BLOCK	
MF	FAN MOTOR (HEAT EXCHANGER)	⏚	EARTH TERMINAL	
CH	CRANK CASE HEATER (COMPRESSOR)			

NOTE:
1. Be sure to apply earth work to the unit. (Use the earth ter-minal of TB1.)

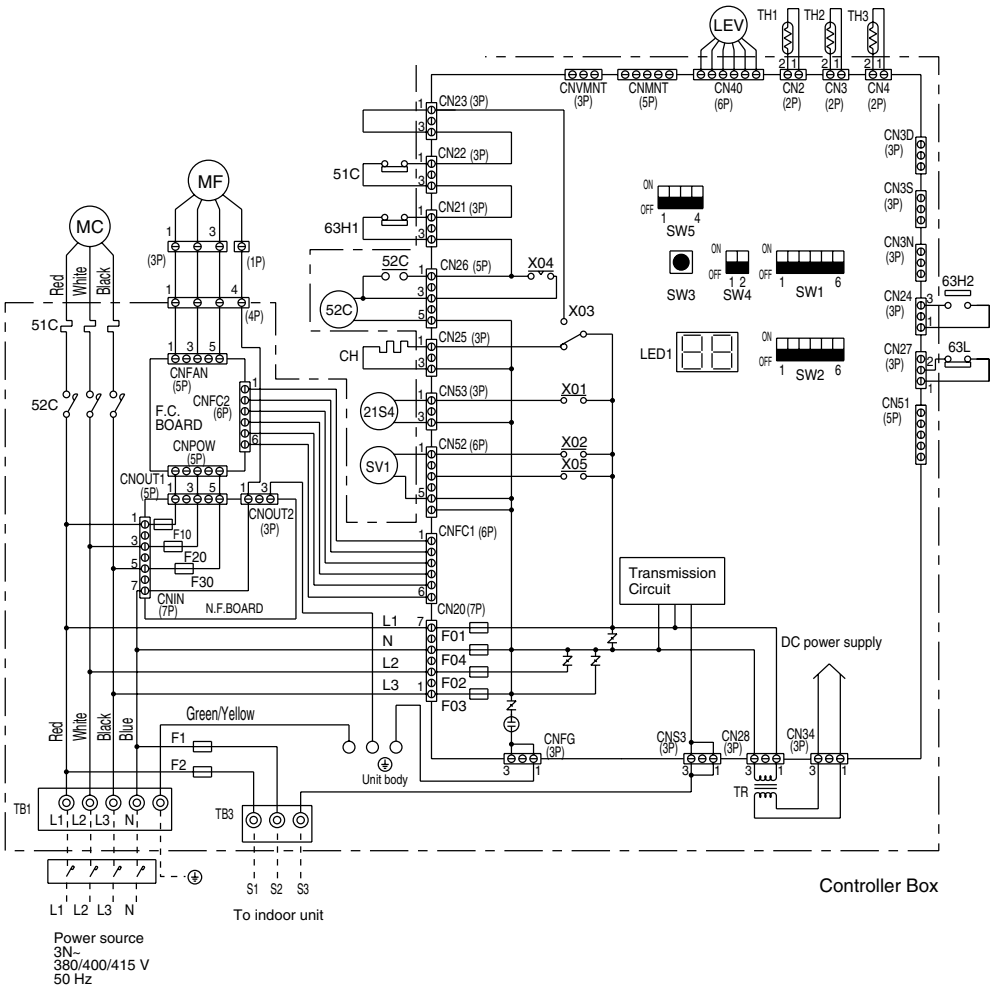

NOTE SW5-4 IS OFF IN CASE OF PUH-P8YE.
SW5-4 IS ON IN CASE OF PUH-P10YE.

PUH-P8YE **PUH-P10YE**

A.7.5 NOISE CRITERION CURVES

Ambient temperature 27℃

Test conditions are based on JIS Z8731

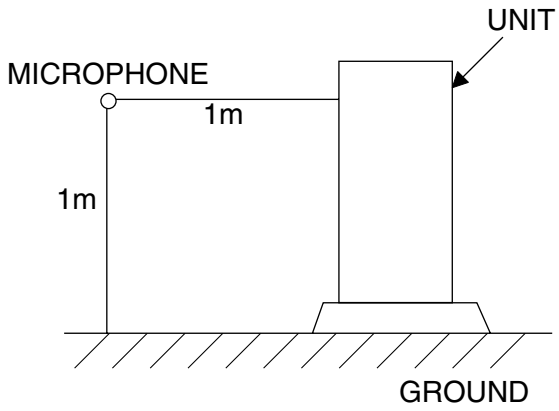

PUH-P1VGAA

NOTCH	SPL(dB)	LINE
COOLING	46	○——○
HEATING	48	●——●

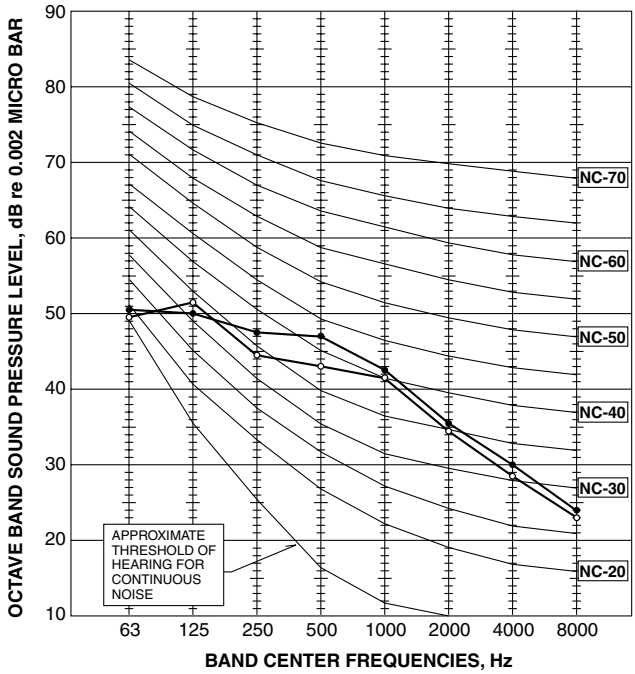

PUH-P1.6VGAA / P1.6YGAA PU-P1.6VGAA

NOTCH	SPL(dB)	LINE
COOLING	47	○——○
HEATING	49	●——●

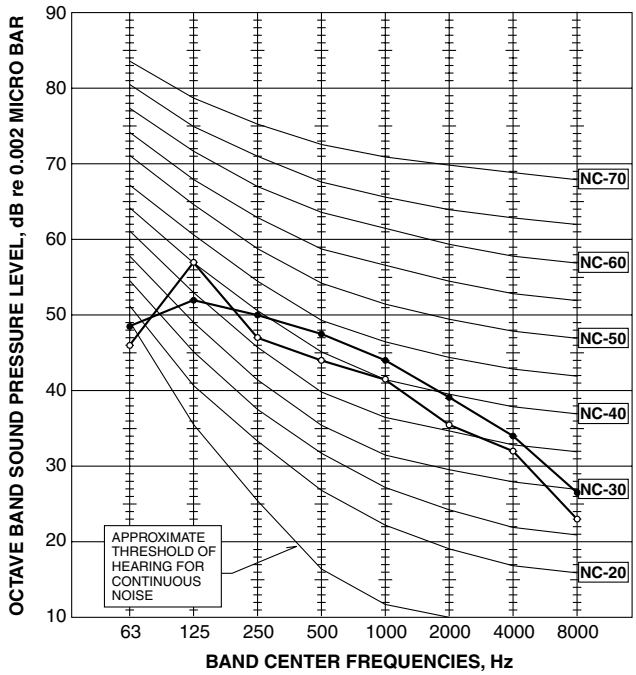

PUH-P2VGAA / P2YGAA PU-P2VGAA

NOTCH	SPL(dB)	LINE
COOLING	48	○——○
HEATING	49	●——●

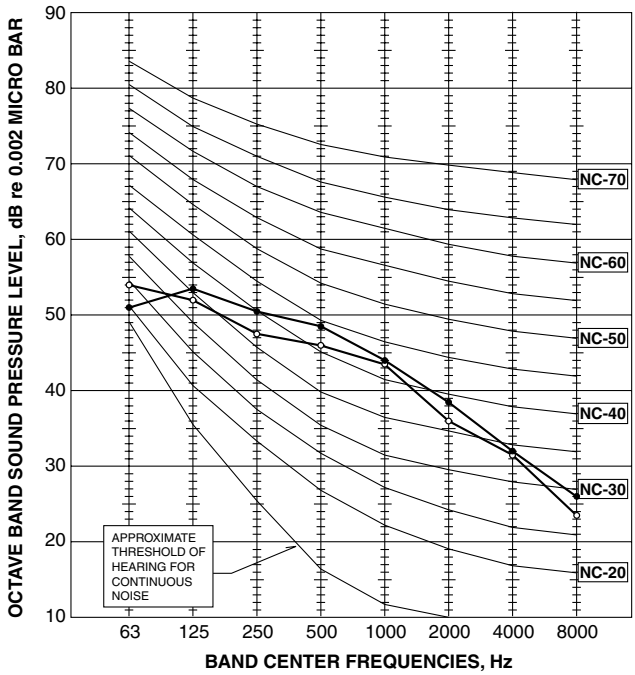

PUH-P2.5VGAA / P2.5YGAA
PU-P2.5VGAA

NOTCH	SPL(dB)	LINE
COOLING	48	○——○
HEATING	50	●——●

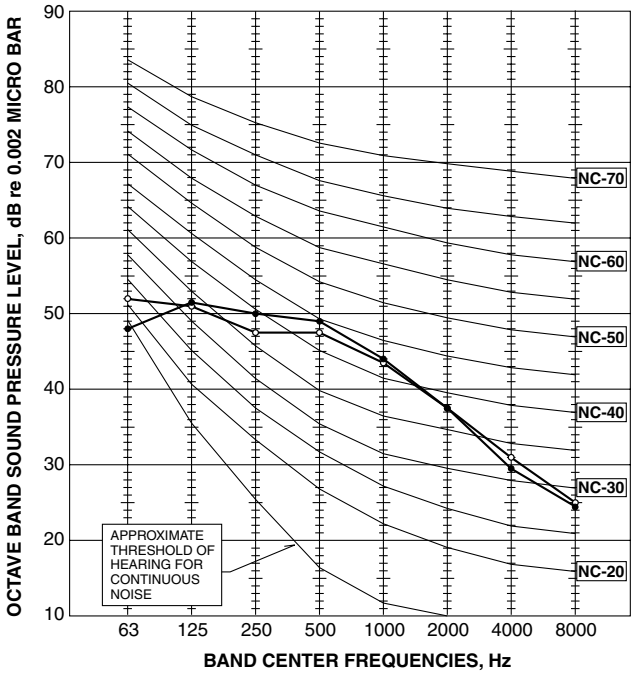

PUH-P3VGAA / P3YGAA
PU-P3VGAA / P3YGAA

NOTCH	SPL(dB)	LINE
COOLING	49	○——○
HEATING	51	●——●

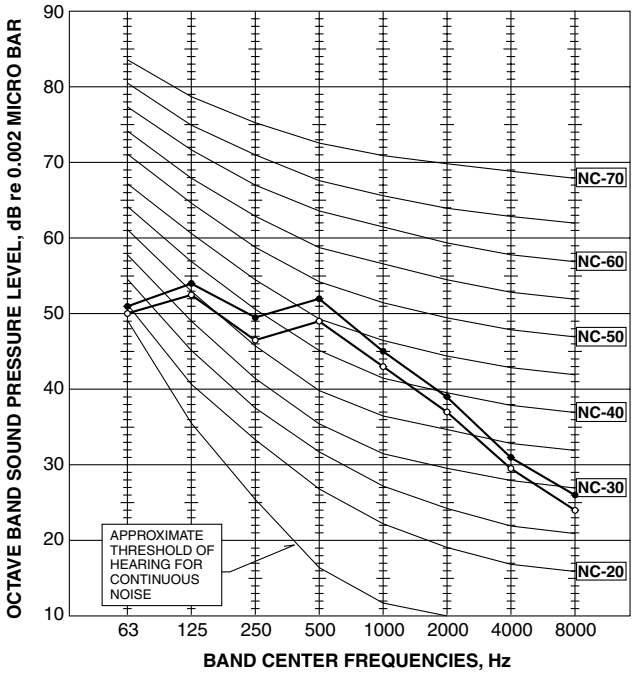

OUTDOOR UNIT

NOISE CRITERION CURVES

PUH-P4VGAA / P4YGAA
PU-P4VGAA / P4YGAA

NOTCH	SPL(dB)	LINE
COOLING	51	○——○
HEATING	53	●——●

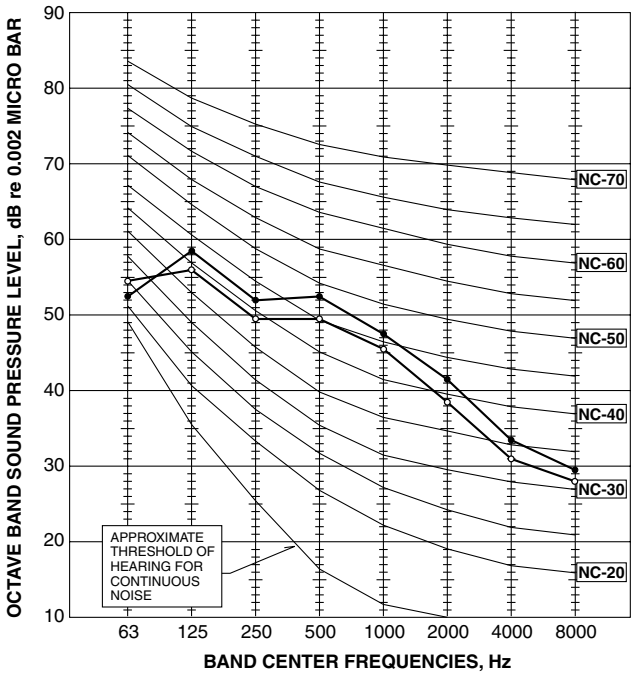

PUH-P5YGAA
PU-P5YGAA

NOTCH	SPL(dB)	LINE
COOLING	55	○——○
HEATING	56	●——●

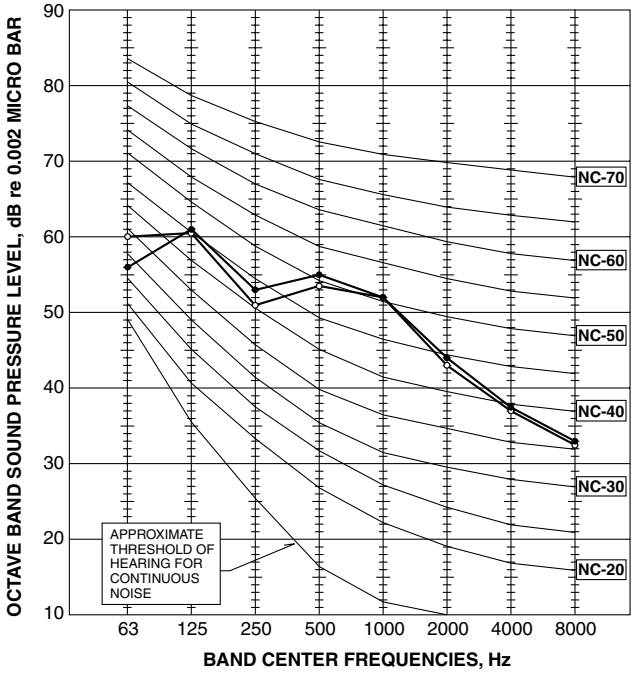

PUH-P6YGAA
PU-P6YGAA

NOTCH	SPL(dB)	LINE
COOLING	57	○——○
HEATING	58	●——●

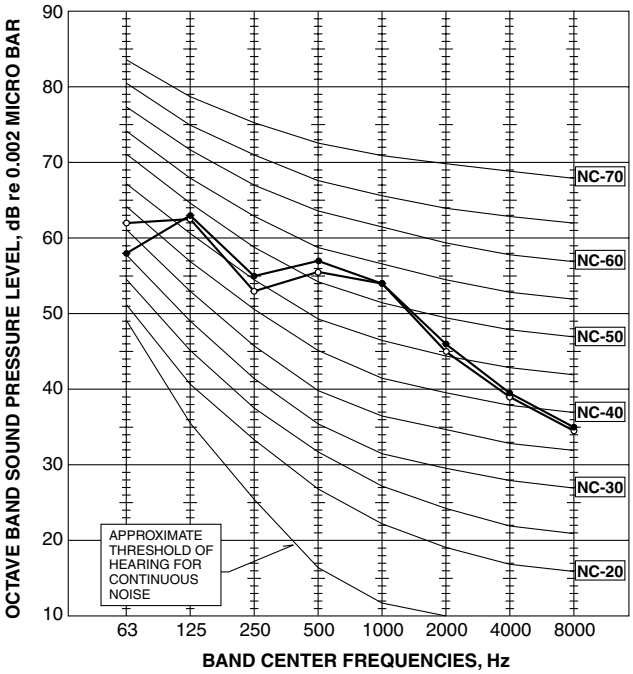

PUH-P8YE

Measurement condition

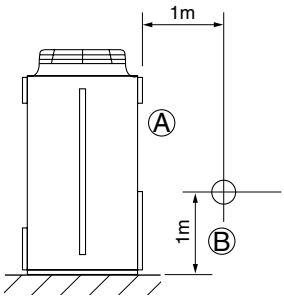

Sound pressure level in anechoic room
56 dB (A)

63Hz	125Hz	250Hz	500Hz	1000Hz	2000Hz	4000Hz	8000Hz	
63	59	56	55	50	45	42	39	(dB)

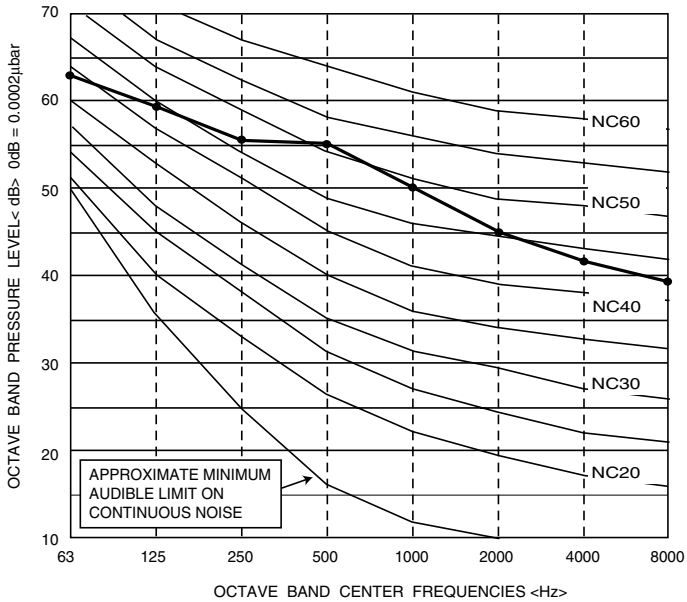

NOTE: The measuring point is 1m from the bottom of the unit (1m from the front of the unit)

PUH-P10YE

Measurement condition

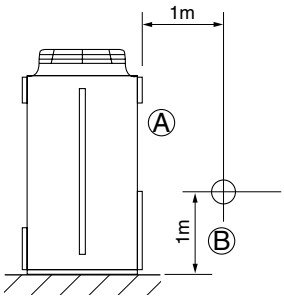

Sound pressure level in anechoic room
57 dB (A)

63Hz	125Hz	250Hz	500Hz	1000Hz	2000Hz	4000Hz	8000Hz	
63	60	56	56	51	47	44	40	(dB)

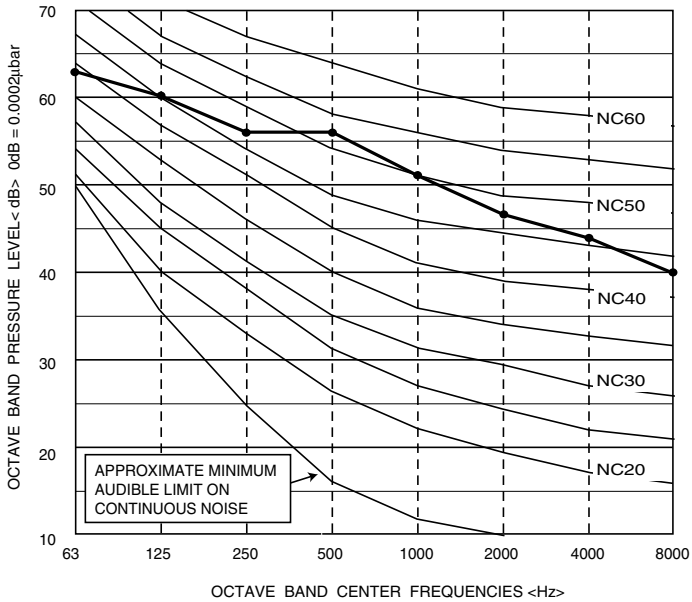

NOTE: The measuring point is 1m from the bottom of the unit (1m from the front of the unit)

A.7.6 INSTALLATION PROCEDURE

In case of PUH-P·GAA

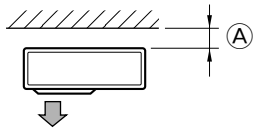

1. Installation location

1-1 Ventilation and service space

When installing a single outdoor unit

Ⓐ 100 (150) mm or more

When installing many outdoor units

Ⓐ Min. 1000 (1500) mm
Ⓑ Min. 300 (500) mm
Ⓒ Max. 300 mm
Ⓓ Min. 1000 (1500) mm
∗ The dimensions in ( ) are for PUH-P4, P5, P6 models.

When installing the unit on a rooftop or other location unprotected from the wind, situate the unit's air outlet so that it is not directly exposed to strong winds.

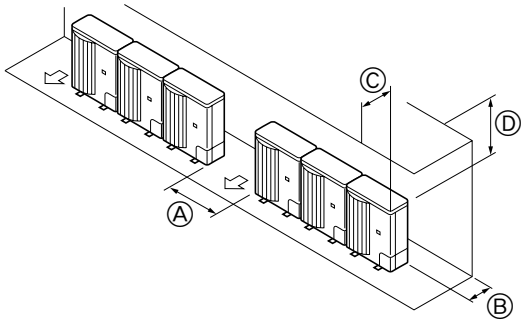

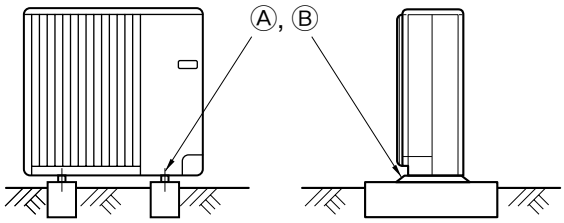

2. Installing the outdoor unit

- Be sure to install the unit in a sturdy, level surface to prevent rattling noises during operation.

<Foundation specifications>

Foundation bolt	M10 (3/8")
Thickness of concrete	120 mm
Length of bolt	70 mm
Weight-bearing capacity	320 kg

Ⓐ M10 (3/8") bolt
Ⓑ M10 (3/8") bolt
Ⓒ Installation base
Ⓓ Max. 30 mm (Length of foundation bolt)
∗ The dimensions in ( ) are for PU(H)-P5, P6 models.

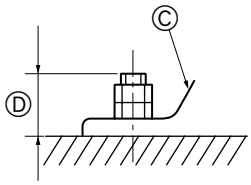

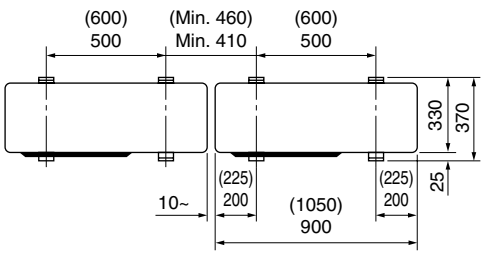

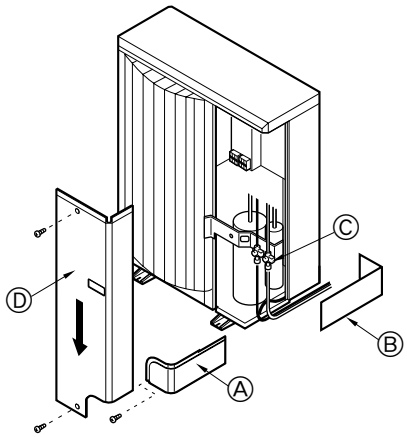

(1) Gas side

①

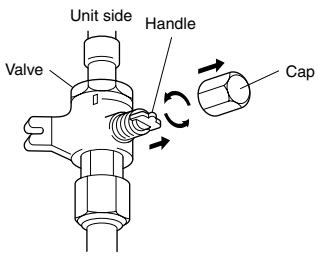

Refrigerant piping side

②

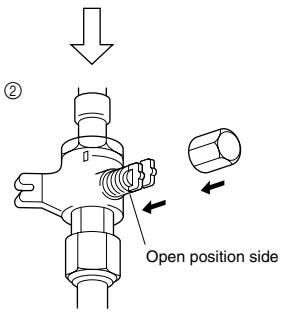

(2) Liquid side

①

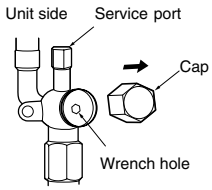

(On-site installation)
Refrigerant piping side

②

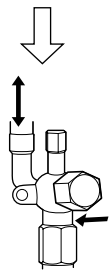

Direction the refrigerant flows in

3. Installing the refrigerant piping

3-1 Precautions for devices that use R407C refrigerant

- **Do not use the existing refrigerant piping.**
- **Do not use crushed, misshapen, or discolored tubing. The inside of the tubing should be clean and free from harmful sulfuric compounds, oxidants, dirt, debris, oils and moisture.**
- **Store the piping to be used during installation indoors and keep both ends of the piping sealed until just before brazing.**
- **Use ester oil, ether oil or alkylbenzene (small amount) as the refrigerator oil to coat flares and flange connections.**
- **Use liquid refrigerant to fill the system.**
- **Do not use a refrigerant other than R407C.**
- **Use a vacuum pump with a reverse flow check valve.**
- **Do not use the tools that are used with conventional refrigerants.**
- **Do not use a charging cylinder.**
- **Be especially careful when managing the tools.**
- **Do not use commercially available dryers.**

3-2 Outdoor unit

Remove the service panel Ⓓ (three screws) and the front piping cover Ⓐ (one screw) and rear piping cover Ⓑ (two screws).

Ⓒ Stop valve

① Perform refrigerant piping connections for the indoor/outdoor unit when the outdoor unit's stop valve is completely closed.
② Vacuum-purge air from the indoor unit and the connection piping.
③ Release the vacuum inside of the service port mentioned above by completely opening the stop valves of the outdoor unit.
Operation of the unit while the valves are closed may cause damage to the compressor, controller, etc.
④ Use a sealant to protect the pipe connections to prevent water from saturating the ends of the insulation material.

3-3 Stop valve

(1) Gas side
① Remove the cap, pull the handle toward you and rotate 1/4 turn in a counterclockwise direction to shut.
② Make sure that the stop valve is open completely, push in the handle and rotate the cap back to its original position.

(2) Liquid side
① Remove the cap and turn the valve rod counterclockwise as far as it will go with the use of a 4 mm hexagonal wrench. Stop turning when it hits the stopper.
(ϕ6.35: Approximately 4.5 revolutions) (ϕ9.52: Approximately 10 revolutions)
② Make sure that the stop valve is open completely, push in the handle and rotate the cap back to its original position.

3-4 Addition of refrigerant

Refrigerant charge:
- The liquid refrigerant should be charged using the low pressure charge plug in the service panel.
- Use the following table when adding R407C refrigerant to tubing that is over 30 m.

(kg)

Models	Piping length (One way)					Factory charged
	-10 m	-20 m	-30 m	-40 m	-50 m	
P1	1.7		1.8	–	–	1.7
P1.6	2.5		2.6	3.0	–	2.5
P2	2.6		3.1	3.7	–	2.6
P2.5	3.1		3.3	3.9	4.5	3.1
P3	3.3			3.9	4.5	3.3
P4	4.0			4.7	5.4	4.0
P5	4.6			5.3	6.0	4.6
P6	4.9			5.6	6.3	4.9

Example) For P5 model with 38 m of piping.
5.3 kg (40 m) – 4.6 kg
Therefore, additional refrigerant required = 0.7 kg

A.7.7 CENTER OF GRAVITY POSITION

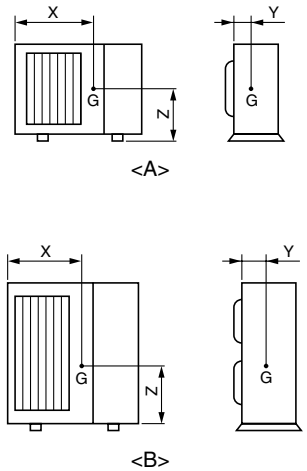

Model \ Item	Center of gravity (G) X	Y	Z	Outline
PUH-P1/P1.6VGAA PUH-P1.6YGAA	560	160	270	A
PUH-P2/P2.5/P3VGAA PUH-P2/P2.5/P3YGAA	585	160	340	A
PUH-P4VGAA PUH-P4YGAA	660	150	490	B
PUH-P5/P6YGAA	620	160	540	B
PU-P1.6VGAA PU-P1.6YGAA	560	160	270	A
PU-P2/P2.5/P3VGAA PU-P2/P2.5/P3YGAA	585	160	340	A
PU-P4VGAA PU-P4YGAA	660	150	490	B
PU-P5/P6YGAA	620	160	540	B

Model \ Item	Center of gravity (mm) X	Y	Z	Net weight (kg)
PUH-P8YE	330	350	490	215
PUH-P10YE	300	330	510	220

⚠ Warning

Lift unit slowly by suspending rope uniformly so that the rope will not slip off or unit will not incline seriously.

Be careful that unit may fall down if the rope is not in a proper position as the center or gravity of unit is being inclined.

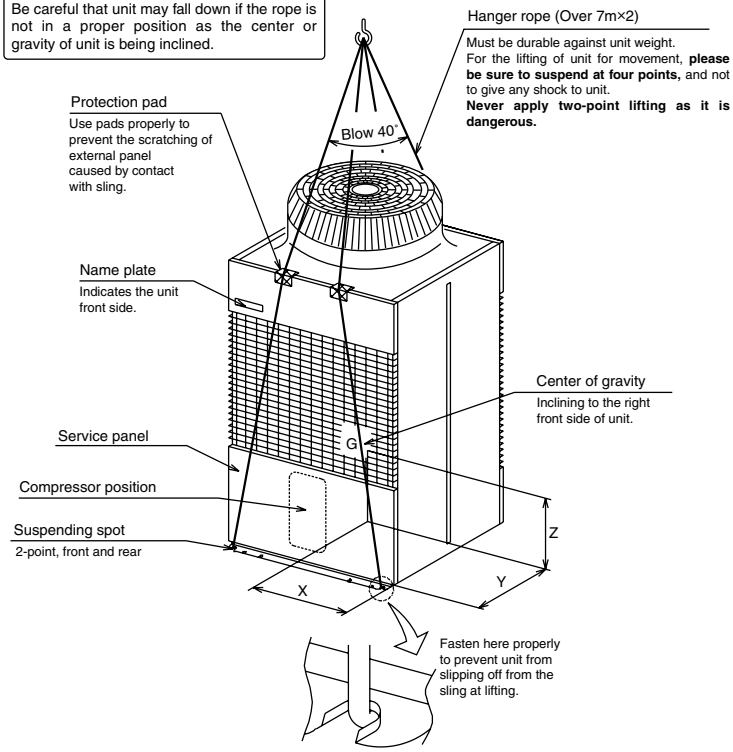

A.7.8 SAFETY DEVICE SETTINGS

PUH-P1/P1.6/P2/P2.5/P3/P4VGAA
PUH-P1.6/P2/P2.5/P3/P4/P5/P6YGAA

Safety device \ Model		PUH-P1VGAA	PUH-P1.6VGAA	PUH-P1.6YGAA	PUH-P2VGAA	PUH-P2YGAA
Comp direct cut	U.T.C	8.4-12.6A 130℃	8.0-11.5A 130℃	—	18.6-24.4A 130℃	—
	ST(at 25℃)	30A,3-10sec	26A,5-15sec	—	65A,3-10sec	—
	OPEN	155±5℃	160±5℃	—	170±5℃	—
Comp thermal relay		—	—	4.5A	—	5.8A
CT direction		—	—	4.5A	—	5.8A
High pressure switch		OFF 3.3+0.1/–0.05Mpa ON 2.6±0.2Mpa				
Low pressure switch		—				
Fan motor thermal protector		OFF 135±5℃				

Safety device \ Model		PUH-P2.5VGAA	PUH-P2.5YGAA	PUH-P3VGAA	PUH-P3YGAA
Comp direct cut	U.T.C	21.0-31.4A 130℃	—	25-36A 130℃	—
	ST(at 25℃)	74A,5-15sec	—	96A,3-10sec	—
	OPEN	160±5℃	—	155±5℃	—
Comp thermal relay		—	6.4A	—	9A
CT direction		—	6.4A	—	9A
High pressure switch		OFF 3.3+0.1/–0.05Mpa ON 2.6±0.2Mpa			
Low pressure switch		—			
Fan motor thermal protector		OFF 135±5℃			

Safety device \ Model		PUH-P4VGAA	PUH-P4YGAA	PUH-P5YGAA	PUH-P6YGAA
Comp direct cut	U.T.C	28-41A 130℃	—	—	—
	ST(at 25℃)	97A,3-10sec	—	59A,3-10sec	58A,3-10sec
	OPEN	160±5℃	—	120℃	130℃
Comp thermal relay		—	9A	17A	17A
CT direction		—	9A	15A	17A
High pressure switch		OFF 3.3+0.1/–0.05Mpa ON 2.6±0.2Mpa			
Low pressure switch		—			
Fan motor thermal protector		OFF 135±5℃			

PU-P1.6/P2/P2.5/P3/P4VGAA
PU-P1.6/P2/P2.5/P3/P4/P5/P6YGAA

Safety device \ Model		PU-P1.6VGAA	PU-P1.6YGAA	PU-P2VGAA	PU-P2YGAA
Comp direct cut	U.T.C	8.0-11.5A 130℃	—	21-26A 120℃	—
	ST(at 25℃)	26A,5-15sec	—	55A,13sec	—
	OPEN	160±5℃	—	170±5℃	—
Comp thermal relay		—	4.5A	—	5.8A
CT direction		—	4.5A	—	5.8A
High pressure switch		OFF 3.3+0.1/–0.05Mpa ON 2.6±0.2Mpa			
Low pressure switch		—			
Fan motor thermal protector		OFF 120±5℃			

Safety device \ Model		PU-P2.5VGAA	PU-P2.5YGAA	PU-P3VGAA	PU-P3YGAA
Comp direct cut	U.T.C	21-26A 120℃	—	21.8A 130℃	—
	ST(at 25℃)	55A,13sec	—	96A,3-9sec	—
	OPEN	170±5℃	—	165+8/-5℃	—
Comp thermal relay		—	6.4A	—	9A-9A
CT direction		—	6.4A	—	8A
High pressure switch		OFF 3.3+0.1/–0.05Mpa ON 2.6±0.2Mpa			
Low pressure switch		—			
Fan motor thermal protector		OFF 120±5℃			

Safety device \ Model		PU-P4VGAA	PU-P4YGAA	PU-P5YGAA	PU-P6YGAA
Comp direct cut	U.T.C	28-41A 130℃	—	—	—
	ST(at 25℃)	97A,3-10sec	—	59A,3-10sec	58A,3-10sec
	OPEN	160±5℃	—	120℃	130℃
Comp thermal relay		—	9A-9A	15A-17A	15A-17A
CT direction		—	9A	15A	17A
High pressure switch		OFF 3.3+0.1/–0.05Mpa ON 2.6±0.2Mpa			
Low pressure switch		—		OFF –0.03 ±0.03Mpa ON 0.05±0.04Mpa	
Fan motor thermal protector		OFF 120±5℃			

PUH-P8YE, PUH-P10YE

Safety device \ Model		PUH-P8YE	PUH-P10YE
Comp direct cut	U.T.C	—	—
	ST(at 25℃)	—	—
	OPEN	—	—
Comp thermal relay		22A	27A
CT direction		—	—
High pressure switch		OFF 3.3+0/–0.15Mpa ON 2.65±0.2Mpa	
Low pressure switch		OFF 0±0.02Mpa ON 0.06±0.4Mpa	
Discharge temperature thermostat		OFF 118℃	
Fan motor thermal protector		OFF 150±5℃	