A.3 CEILING-SUSPENDED

A.3.1 FEATURES A-126
A.3.2 SPECIFICATIONS A-127
A.3.2.1 Heat Pump (Refrigerant R407C) A-127
A.3.2.2 Cool Only (Refrigerant R407C) A-133
A.3.3 ELECTRICAL DATA A-136
A.3.3.1 Heat Pump (Refrigerant R407C) A-136
A.3.3.2 Cool Only (Refrigerant R407C) A-139
A.3.4 OUTLINES AND DIMENSIONS A-141
A.3.5 WIRING DIAGRAM A-145
A.3.6 REFRIGERANT SYSTEM DIAGRAM A-146
A.3.7 PERFORMANCE DATA A-150
A.3.8 NOISE CRITERION CURVES A-164
A.3.9 TEMPERATURE AND AIR FLOW DISTRIBUTIONS A-166
A.3.10 OUTLET AIR SPEED AND COVERAGE RANGE A-168
A.3.11 REMOTE CONTROLLER A-169
A.3.12 TROUBLESHOOTING A-171
A.3.13 INSTALLATION PROCEDURE A-172
A.3.14 ACCESSORIES AND PARTS A-175
A.3.15 SAFETY DEVICE SETTINGS A-176
A.3.16 SYSTEM CONTROL A-177

Back to Index page

A.3.1 FEATURES

● **Indoor (Main) Unit** **In case of PCH-P3GAH**

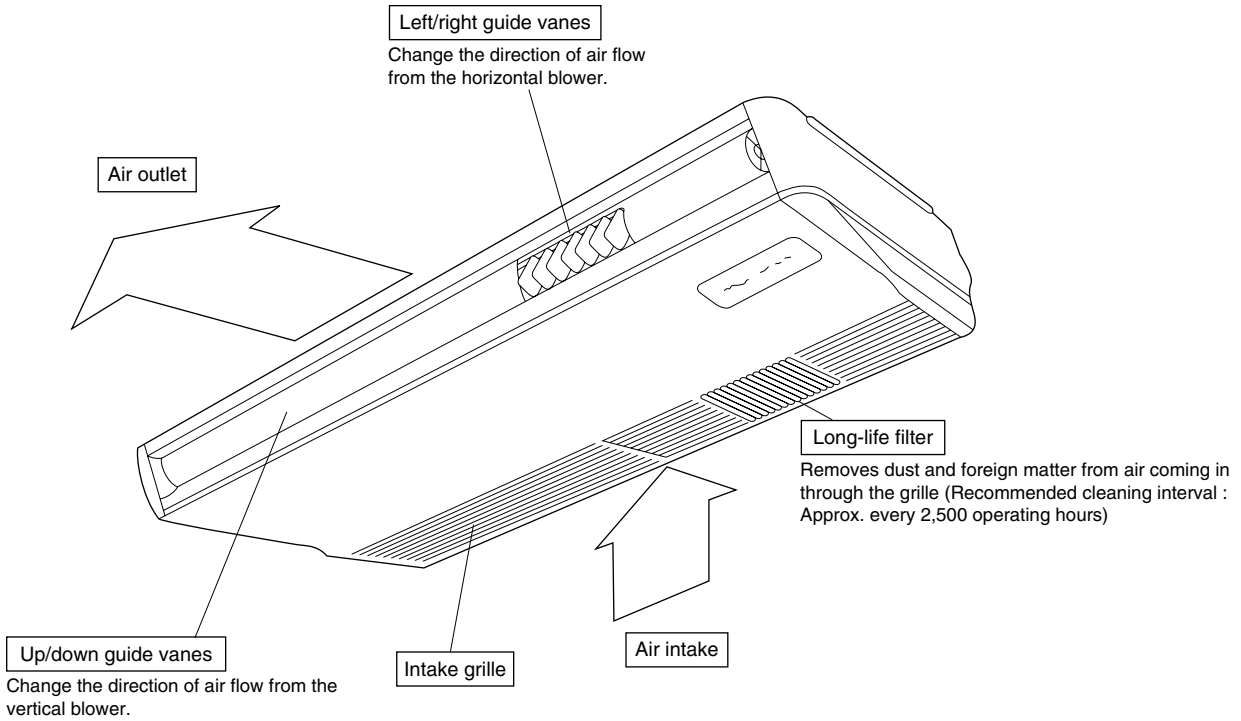

1. AIR OUTLET

New PCH series models have 1 air outlet (auto vane switching of horizontal air flow / down flow by switched by auto vane) instead of 2 (horizontal,and down flows).

2. EASY TO CLEAN ; FLOCKLESS VANE

With our original air current control mechanism, a flockless vane is newly adapted.
The flockless vane prevents the condensation on the vane.
By changing the vane to the flockless type, the unit can be cleaned much easier with mild household detergent.

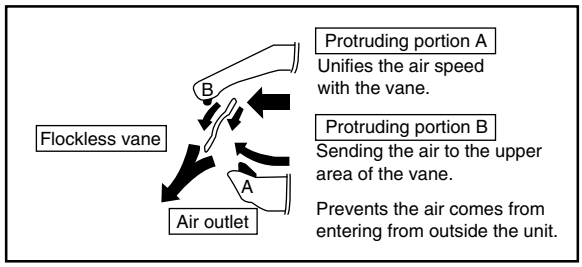

3. NEW MATERIALS FOR BETTER OIL RESISTANCE

We have changed the materials of grille, filer, fan and fan casing from ABS to P.P. (polypropylene) for better oil resistance. As a result, oil crazing is cut in haif.

4. SIMPLIFIED INSTALLATION WORK (DIRECT SUSPENDING METHOD)

Simplified the installation work by changing the suspending method to the direct suspending method. (suspending the unit directly from the suspension fixture)
In this way, the unit can be attached to the suspension fixture without removing the installation parts off (Only the side cover is removed). This method is much simpler than the “One-time installation method”.

A.3.2 SPECIFICATIONS

A.3.2.1 Heat Pump (Refrigerant R407C)

Item				Model / With Electric heater	Without Electric heater	
				PCH-P2GAH	PCA-P2GA	
Function				Cooling	Heating	
Capacity ※1			Btu/h	18,400	21,300 [26,100]	
			W	5,400	6,250 [7,650]	
Total input ※1			kW	2.40	2.40 [3.80]	
Indoor unit	Model name		With Electric heater	PCH-P2GAH		
			Without Electric heater	PCA-P2GA		
	Power supply (phase, cycle,voltage)			Single phase, 50Hz, 220-230-240V		
		Input ※2	kW	0.10	0.10 <1.40>	
		Running current ※2	A	0.43	0.43 <5.83>	
		Starting current ※2	A	1.20	1.20 <5.83>	
	External finish			Munsell 0.70Y 8.59 / 0.97		
	Heat exchanger			Plate fin coil		
	Fan	Fan (drive) × No.		Sirocco (direct) × 2		
		Fan motor output	kW	0.054		
		Air flow (Lo-Mi2-Mi1-Hi)	m³ / min (CFM)	10-11-12-13 (353-338-424-459)		
		External static pressure	Pa (mmAq)	0 (direct blow)		
	Booster heater		kW	1.4		
	Operation control & Thermostat			Remote controller & built-in		
	Noise level (Lo-Mi2-Mi1-Hi)		dB	37-38-40-42		
	Unit drain pipe I.D.		mm (in.)	26 (1)		
	Dimensions	W	mm (in.)	1,000 (39-3/8)		
		D	mm (in.)	680 (26-3/4)		
		H	mm (in.)	210 (8-1/4)		
	Weight	With Electric heater	kg (lbs.)	28.5 (63)		
		Without Electric heater	kg (lbs.)	27 (60)		
Outdoor unit	Model name			PUH-P2VGAA / P2YGAA		
	Power supply (phase, cycle, voltage)			Single phase, 50Hz, 220-230-240V / 3 phases, 50Hz, 380-400-415V (4wires)		
		Input	kW	2.29	2.36	
		Running current	A	10.26 / 3.70	10.57 / 3.82	
		Starting current	A	62 / 31		
	External finish			Munsell 5Y 7/1		
	Refrigerant control			Linear expansion valve		
	Compressor			Hermetic		
		Model		NE36VMJMT / NE36YEKMT		
		Motor output	kW	1.6		
		Starter type		Line start		
		Protection devices		Internal thermostat, HP switch, Discharge thermo. / Thermal relay, HP switch, Discharge thermo.		
	Heat exchanger			Plate fin coil		
	Fan	Fan (drive) × No.		Propeller (direct) × 1		
		Fan motor output	kW	0.070		
		Air flow	m³ / min (CFM)	55 (1,940)		
	Crankcase heater		W	38		
	Defrost method			Reverse cycle		
	Noise level	Cooling	dB	48		
		Heating	dB	49		
	Dimensions	W	mm (in.)	900 (35-7/16)		
		D	mm (in.)	330+20 (13+3/4)		
		H	mm (in.)	855 (33-5/8)		
	Weight		kg (lbs.)	71 (157)		
Refrigerant piping	Refrigerant			R407C		
		Charge	kg (lbs.)	2.6 (5.7)		
		Oil (Model)	L	1.2 (Ester) MEL56		
	Pipe size O.D.	Liquid	mm (in.)	9.52 (3/8)		
		Gas	mm (in.)	15.88 (5/8)		
	Connection method	Indoor side		Flared		
		Outdoor side		Flared		
	Between the indoor & outdoor units	Height difference		Max. 40m		
		Piping length		Max. 40m		

NOTES: 1. Rating Conditions (ISO T1)
Cooling : Indoor : D.B. 27℃ (80˚F), W.B. 19℃ (66˚F) Outdoor : D.B. 35℃ (95˚F), W.B. 24℃ (75˚F)
Heating : Indoor : D.B. 20℃ (68˚F) Outdoor : D.B. 7℃ (45˚F), W.B. 6℃ (43˚F)
Refrigerant piping length (one way) : 5m (16ft)

2. Guaranteed operating range

		Indoor	Outdoor
Cooling	Upper limit	D.B. 35℃, W.B. 22.5℃	D.B. 46℃
	Lower limit	D.B. 19℃, W.B. 15℃	D.B. -5℃
Heating	Upper limit	D.B. 28℃	D.B. 24℃, W.B. 18℃
	Lower limit	D.B. 17℃	D.B. -11℃, W.B. -12℃

※1 : [ ] Shows the total rating.
※2 : < > Shows the only booster heater rating.

3. Above data based on indicated voltage
Indoor unit Single phase 240V 50Hz
Outdoor unit Single phase 240V 50Hz / 3 phases 415V 50Hz

Item	Model	With Electric heater / Without Electric heater		PCH-P2.5GAH / PCA-P2.5GA	
Function				Cooling	Heating
Capacity ※1			Btu/h	22,600	24,900 [32,100]
			W	6,650	7,300 [9,400]
Total input ※1			kW	2.65	2.71 [4.81]
Indoor unit	Model name	With Electric heater		PCH-P2.5GAH	
		Without Electric heater		PCA-P2.5GA	
	Power supply			Single phase, 50Hz, 220-230-240V	
	Input ※2		kW	0.13	0.13 <2.10>
	Running current ※2		A	0.55	0.55 <8.75>
	Starting current ※2		A	1.27	1.27 <8.75>
	External finish			Munsell 0.70Y 8.59 / 0.97	
	Heat exchanger			Plate fin coil	
	Fan	Fan (drive) × No.		Sirocco (direct) × 3	
		Fan motor output	kW	0.07	
		Air flow (Lo-Mi2-Mi1-Hi)	m³ / min (CFM)	14-15-16-18 (494-530-565-635)	
		External static pressure	Pa (mmAq)	0 (direct blow)	
	Booster heater		kW	2.1	
	Operation control & Thermostat			Remote controller & built-in	
	Noise level (Lo-Mi2-Mi1-Hi)		dB	37-39-41-43	
	Unit drain pipe I.D.		mm (in.)	26 (1)	
	Dimensions	W	mm (in.)	1,310 (51-9/16)	
		D	mm (in.)	680 (26-3/4)	
		H	mm (in.)	210 (8-1/4)	
	Weight	With Electric heater	kg (lbs.)	36 (79)	
		Without Electric heater	kg (lbs.)	34 (75)	
Outdoor unit	Model name			PUH-P2.5VGAA / P2.5YGAA	
	Power supply (phase, cycle, voltage)			Single phase, 50Hz, 220-230-240V / 3 phases, 50Hz, 380-400-415V (4wires)	
	Input		kW	2.77	2.68
	Running current		A	11.90 / 4.48	11.51 / 4.34
	Starting current		A	77 / 35	
	External finish			Munsell 5Y 7/1	
	Refrigerant control			Linear expansion valve	
	Compressor			Hermetic	
		Model		NE41VMJMT / NE41YEKMT	
		Motor output	kW	1.9	
		Starter type		Line start	
		Protection devices		Internal thermostat, HP switch, Discharge thermo. / Thermal relay, HP switch, Discharge thermo.	
	Heat exchanger			Plate fin coil	
	Fan	Fan (drive) × No.		Propeller (direct) × 1	
		Fan motor output	kW	0.070	
		Air flow	m³ / min (CFM)	50 (1,770)	
	Crankcase heater		W	38	
	Defrost method			Reverse cycle	
	Noise level	Cooling	dB	48	
		Heating	dB	50	
	Dimensions	W	mm (in.)	900 (35-7/16)	
		D	mm (in.)	330+20 (13+3/4)	
		H	mm (in.)	855 (33-5/8)	
	Weight		kg (lbs.)	82 (181)	
Refrigerant piping	Refrigerant			R407C	
		Charge	kg (lbs.)	3.1 (6.8)	
		Oil (Model)	L	1.2 (Ester) MEL56	
	Pipe size O.D.	Liquid	mm (in.)	9.52 (3/8)	
		Gas	mm (in.)	15.88 (5/8)	
	Connection method	Indoor side		Flared	
		Outdoor side		Flared	
	Between the indoor & outdoor units	Height difference		Max. 50m	
		Piping length		Max. 50m	

NOTE:

1. Rating Conditions (ISO T1)
   Cooling : Indoor : D.B. 27℃ (80˚F), W.B. 19℃ (66˚F) Outdoor : D.B. 35℃ (95˚F), W.B. 24℃ (75˚F)
   Heating : Indoor : D.B. 20℃ (68˚F) Outdoor : D.B. 7℃ (45˚F), W.B. 6℃ (43˚F)
   Refrigerant piping length (one way) : 5m (16ft)
2. Guaranteed operating range

		Indoor	Outdoor
Cooling	Upper limit	D.B. 35˚C, W.B. 22.5˚C	D.B. 46˚C
	Lower limit	D.B. 19˚C, W.B. 15˚C	D.B. -5˚C
Heating	Upper limit	D.B. 28˚C	D.B. 24˚C, W.B. 18˚C
	Lower limit	D.B. 17˚C	D.B. -11˚C, W.B. -12˚C

※1 : [ ] Shows the total rating.
※2 : < > Shows the only booster heater rating.

3. Above data based on indicated voltage
   Indoor unit Single phase 240V 50Hz
   Outdoor unit Single phase 240V 50Hz / 3 phases 415V 50Hz

Item	Model	With Electric heater / Without Electric heater		PCH-P3GAH / PCA-P3GA	
Function				Cooling	Heating
Capacity ※1			Btu/h	25,600	31,300 [38,500]
			W	7,500	9,200 [11,300]
Total input ※1			kW	3.40	3.50 [5.60]
Indoor unit	Model name	With Electric heater		PCH-P3GAH	
		Without Electric heater		PCA-P3GA	
	Power supply			Single phase, 50Hz, 220-230-240V	
	Input ※2		kW	0.13	0.13 <2.10>
	Running current ※2		A	0.55	0.55 <8.75>
	Starting current ※2		A	1.27	1.27 <8.75>
	External finish			Munsell 0.70Y 8.59 / 0.97	
	Heat exchanger			Plate fin coil	
	Fan	Fan (drive) × No.		Sirocco (direct) × 3	
		Fan motor output	kW	0.07	
		Air flow (Lo-Mi2-Mi1-Hi)	m³ / min (CFM)	14-15-16-18 (494-530-565-635)	
		External static pressure	Pa (mmAq)	0 (direct blow)	
	Booster heater		kW	2.1	
	Operation control & Thermostat			Remote controller & built-in	
	Noise level (Lo-Mi2-Mi1-Hi)		dB	37-39-41-43	
	Unit drain pipe I.D.		mm (in.)	26 (1)	
	Dimensions	W	mm (in.)	1,310 (51-9/16)	
		D	mm (in.)	680 (26-3/4)	
		H	mm (in.)	210 (8-1/4)	
	Weight	With Electric heater	kg (lbs.)	36 (79)	
		Without Electric heater	kg (lbs.)	34 (75)	
Outdoor unit	Model name			PUH-P3VGAA / P3YGAA	
	Power supply (phase, cycle, voltage)			Single phase, 50Hz, 220-230-240V / 3 phases, 50Hz, 380-400-415V (4wires)	
	Input		kW	3.27	3.48
	Running current		A	14.81 / 5.29	15.76 / 5.63
	Starting current		A	93 / 47	
	External finish			Munsell 5Y 7/1	
	Refrigerant control			Linear expansion valve	
	Compressor			Hermetic	
	Model			NE52VNJMT / NE52YDKMT	
	Motor output		kW	2.5	
	Starter type			Line start	
	Protection devices			Internal thermostat, HP switch, Discharge thermo. / Thermal relay, HP switch, Discharge thermo.	
	Heat exchanger			Plate fin coil	
	Fan	Fan (drive) × No.		Propeller (direct) × 1	
		Fan motor output	kW	0.070	
		Air flow	m³ / min (CFM)	50 (1,770)	
	Crankcase heater		W	38	
	Defrost method			Reverse cycle	
	Noise level	Cooling	dB	49	
		Heating	dB	51	
	Dimensions	W	mm (in.)	900 (35-7/16)	
		D	mm (in.)	330+20 (13+3/4)	
		H	mm (in.)	855 (33-5/8)	
	Weight		kg (lbs.)	82 (181)	
Refrigerant piping	Refrigerant			R407C	
	Charge		kg (lbs.)	3.3 (7.3)	
	Oil (Model)		L	1.3 (Ester) MEL56	
	Pipe size O.D.	Liquid	mm (in.)	9.52 (3/8)	
		Gas	mm (in.)	15.88 (5/8)	
	Connection method	Indoor side		Flared	
		Outdoor side		Flared	
	Between the indoor & outdoor units	Height difference		Max. 50m	
		Piping length		Max. 50m	

NOTE:

1. Rating Conditions (ISO T1)
   Cooling : Indoor : D.B. 27℃ (80˚F), W.B. 19℃ (66˚F) Outdoor : D.B. 35℃ (95˚F), W.B. 24℃ (75˚F)
   Heating : Indoor : D.B. 20℃ (68˚F) Outdoor : D.B. 7℃ (45˚F), W.B. 6℃ (43˚F)
   Refrigerant piping length (one way) : 5m (16ft)
2. Guaranteed operating range

		Indoor	Outdoor
Cooling	Upper limit	D.B. 35℃, W.B. 22.5℃	D.B. 46℃
	Lower limit	D.B. 19℃, W.B. 15℃	D.B. -5℃
Heating	Upper limit	D.B. 28℃	D.B. 24℃, W.B. 18℃
	Lower limit	D.B. 17℃	D.B. -11℃, W.B. -12℃

※1 : [ ] Shows the total rating.
※2 : < > Shows the only booster heater rating.

3. Above data based on indicated voltage
   Indoor Unit Single phase 240V 50Hz
   Outdoor Unit Single phase 240V 50Hz / 3 phases 415V 50Hz

Item	Model	With Electric heater / Without Electric heater		PCH-P4GAH / PCA-P4GA	
Function				Cooling	Heating
Capacity ※1			Btu/h	33,100	36,300 [45,600]
			W	9,700	10,650 [13,350]
Total input ※1			kW	3.64	3.83 [6.53]
Indoor unit	Model name	With Electric heater		PCH-P4GAH	
		Without Electric heater		PCA-P4GA	
	Power supply			Single phase, 50Hz, 220-230-240V	
	Input ※2		kW	0.16	0.16 <2.70>
	Running current ※2		A	0.70	0.70 <11.25>
	Starting current ※2		A	1.48	1.48 <11.25>
	External finish			Munsell 0.70Y 8.59 / 0.97	
	Heat exchanger			Plate fin coil	
	Fan	Fan (drive) × No.		Sirocco (direct) × 3	
		Fan motor output	kW	0.09	
		Air flow (Lo-Mi2-Mi1-Hi)	m³ / min (CFM)	20-21-23-25 (706-741-812-883)	
		External static pressure	Pa (mmAq)	0 (direct blow)	
	Booster heater		kW	2.7	
	Operation control & Thermostat			Remote controller & built-in	
	Noise level (Lo-Mi2-Mi1-Hi)		dB	40-41-43-45	
	Unit drain pipe I.D.		mm (in.)	26 (1)	
	Dimensions	W	mm (in.)	1,310 (51-9/16)	
		D	mm (in.)	680 (26-3/4)	
		H	mm (in.)	270 (10-5/8)	
	Weight	With Electric heater	kg (lbs.)	39.5 (87)	
		Without Electric heater	kg (lbs.)	37 (82)	
Outdoor unit	Model name			PUH-P4VGAA / P4YGAA	
	Power supply (phase, cycle, voltage)			Single phase, 50Hz, 220-230-240V / 3 phases, 50Hz, 380-400-415V (4wires)	
	Input		kW	3.43	3.62
	Running current		A	15.71 / 5.55	16.58 / 5.86
	Starting current		A	99 / 49	
	External finish			Munsell 5Y 7/1	
	Refrigerant control			Linear expansion valve	
	Compressor			Hermetic	
		Model		NE56VNJMT / NE56YDKMT	
		Motor output	kW	2.7	
		Starter type		Line start	
		Protection devices		Internal thermostat, HP switch, Discharge thermo. / Thermal relay, HP switch, Discharge thermo.	
	Heat exchanger			Plate fin coil	
	Fan	Fan (drive) × No.		Propeller (direct) × 2	
		Fan motor output	kW	0.070+0.070	
		Air flow	m³ / min (CFM)	85 (3,000)	
	Crankcase heater		W	38	
	Defrost method			Reverse cycle	
	Noise level	Cooling	dB	51	
		Heating	dB	53	
	Dimensions	W	mm (in.)	900 (35-7/16)	
		D	mm (in.)	330+20 (13+3/4)	
		H	mm (in.)	1,260 (49-5/8)	
	Weight		kg (lbs.)	96 (212)	
Refrigerant piping	Refrigerant			R407C	
		Charge	kg (lbs.)	4.0 (8.8)	
		Oil (Model)	L	1.3 (Ester) MEL56	
	Pipe size O.D.	Liquid	mm (in.)	9.52 (3/8)	
		Gas	mm (in.)	19.05 (3/4)	
	Connection method	Indoor side		Flared	
		Outdoor side		Flared	
	Between the indoor & outdoor units	Height difference		Max. 50m	
		Piping length		Max. 50m	

NOTE:

1. Rating Conditions (ISO T1)
   Cooling : Indoor : D.B. 27℃ (80˚F), W.B. 19℃ (66˚F) Outdoor : D.B. 35℃ (95˚F), W.B. 24℃ (75˚F)
   Heating : Indoor : D.B. 20℃ (68˚F) Outdoor : D.B. 7℃ (45˚F), W.B. 6℃ (43˚F)
   Refrigerant piping length (one way) : 5m (16ft)
2. Guaranteed operating range

		Indoor	Outdoor
Cooling	Upper limit	D.B. 35℃, W.B. 22.5℃	D.B. 46℃
	Lower limit	D.B. 19℃, W.B. 15℃	D.B. -5℃
Heating	Upper limit	D.B. 28℃	D.B. 24℃, W.B. 18℃
	Lower limit	D.B. 17℃	D.B. -11℃, W.B. -12℃

※1 : [ ] Shows the total rating.
※2 : < > Shows the only booster heater rating.

3. Above data based on indicated voltage
   Indoor unit Single phase 240V 50Hz
   Outdoor unit Single phase 240V 50Hz / 3 phases 415V 50Hz

Item \ Model			With Electric heater / Without Electric heater	PCH-P5GAH / PCA-P5GA	
Function				Cooling	Heating
Capacity ※1			Btu/h	42,300	50,800 [61,000]
			W	12,400	14,900 [17,880]
Total input ※1			kW	4.94	5.14 [8.14]
Indoor unit	Model name		With Electric heater	PCH-P5GAH	
			Without Electric heater	PCA-P5GA	
	Power supply			Single phase, 50Hz, 220-230-240V	
		Input ※2	kW	0.24	0.24 <3.00>
		Running current ※2	A	1.06	1.06 <12.50>
		Starting current ※2	A	2.20	2.20 <12.50>
	External finish			Munsell 0.70Y 8.59 / 0.97	
	Heat exchanger			Plate fin coil	
	Fan	Fan (drive) × No.		Sirocco (direct) × 4	
		Fan motor output	kW	0.15	
		Air flow (Lo-Mi2-Mi1-Hi)	m³ / min (CFM)	27-30-32-34 (953-1,059-1,130-1,200)	
		External static pressure	Pa (mmAq)	0 (direct blow)	
	Booster heater		kW	3.0	
	Operation control & Thermostat			Remote controller & built-in	
	Noise level (Lo-Mi2-Mi1-Hi)		dB	41-43-45-46	
	Unit drain pipe I.D.		mm (in.)	26 (1)	
	Dimensions	W	mm (in.)	1,620 (63-3/4)	
		D	mm (in.)	680 (26-3/4)	
		H	mm (in.)	270 (10-5/8)	
	Weight	With Electric heater	kg (lbs.)	46 (101)	
		Without Electric heater	kg (lbs.)	43 (95)	
Outdoor unit	Model name			PUH-P5YGAA	
	Power supply (phase, cycle, voltage)			3 phases, 50Hz, 380-400-415V (4wires)	
		Input	kW	4.70	5.04
		Running current	A	7.60	8.15
		Starting current	A	65.5	
	External finish			Munsell 5Y 7/1	
	Refrigerant control			Linear expansion valve	
	Compressor			Hermetic	
		Model		ZR61KCE-TFD	
		Motor output	kW	3.5	
		Starter type		Line start	
		Protection devices		Internal thermostat, Thermal relay, HP switch, Discharge thermo.	
	Heat exchanger			Plate fin coil	
	Fan	Fan (drive) × No.		Propeller (direct) × 2	
		Fan motor output	kW	0.070+0.070	
		Air flow	m³ / min (CFM)	95 (3,360)	
	Crankcase heater		W	38	
	Defrost method			Reverse cycle	
	Noise level	Cooling	dB	55	
		Heating	dB	56	
	Dimensions	W	mm (in.)	1,050 (41-5/16)	
		D	mm (in.)	330+20 (13+3/4)	
		H	mm (in.)	1,260 (49-5/8)	
	Weight		kg (lbs.)	122 (269)	
Refrigerant piping	Refrigerant			R407C	
		Charge	kg (lbs.)	4.6 (10.1)	
		Oil (Model)	L	1.690 (Ester) MMMA-POE	
	Pipe size O.D.	Liquid	mm (in.)	9.52 (3/8)	
		Gas	mm (in.)	19.05 (3/4)	
	Connection method	Indoor side		Flared	
		Outdoor side		Flared	
	Between the indoor & outdoor units	Height difference		Max. 50m	
		Piping length		Max. 50m	

NOTE:

1. Rating Conditions (ISO T1)
   Cooling : Indoor : D.B. 27℃ (80˚F), W.B. 19℃ (66˚F) Outdoor : D.B. 35℃ (95˚F), W.B. 24℃ (75˚F)
   Heating : Indoor : D.B. 20℃ (68˚F) Outdoor : D.B. 7℃ (45˚F), W.B. 6℃ (43˚F)
   Refrigerant piping length (one way) : 5m (16ft)
2. Guaranteed operating range

		Indoor	Outdoor
Cooling	Upper limit	D.B. 35℃, W.B. 22.5℃	D.B. 46℃
	Lower limit	D.B. 19℃, W.B. 15℃	D.B. -5℃
Heating	Upper limit	D.B. 28℃	D.B. 24℃, W.B. 18℃
	Lower limit	D.B. 17℃	D.B. -11℃, W.B. -12℃

※1 : [ ] Shows the total rating.
※2 : < > Shows the only booster heater rating.

3. Above data based on indicated voltage
   Indoor unit Single phase 240V 50Hz
   Outdoor unit 3 phases 415V 50Hz

Item	Model	With Electric heater / Without Electric heater		PCH-P6GAH / PCA-P6GA	
Function				Cooling	Heating
Capacity ※1			Btu/h	48,700	58,300 [68,500]
			W	14,300	17,100 [20,100]
Total input ※1			kW	5.94	6.27 [9.27]
Indoor unit	Model name	With Electric heater		PCH-P6GAH	
		Without Electric heater		PCA-P6GA	
	Power supply			Single phase, 50Hz, 220-230-240V	
		Input ※2	kW	0.24	0.24 <3.00>
		Running current ※2	A	1.06	1.06 <12.50>
		Starting current ※2	A	2.20	2.20 <12.50>
	External finish			Munsell 0.70Y 8.59 / 0.97	
	Heat exchanger			Plate fin coil	
	Fan	Fan (drive) × No.		Sirocco (direct) × 4	
		Fan motor output	kW	0.15	
		Air flow (Lo-Mi2-Mi1-Hi)	m³ / min (CFM)	27-30-32-34 (953-1,059-1,130-1,200)	
		External static pressure	Pa (mmAq)	0 (direct blow)	
	Booster heater		kW	3.0	
	Operation control & Thermostat			Remote controller & built-in	
	Noise level (Lo-Mi2-Mi1-Hi)		dB	42-44-46-48	
	Unit drain pipe I.D.		mm (in.)	26 (1)	
	Dimensions	W	mm (in.)	1,620 (63-3/4)	
		D	mm (in.)	680 (26-3/4)	
		H	mm (in.)	270 (10-5/8)	
	Weight	With Electric heater	kg (lbs.)	48 (106)	
		Without Electric heater	kg (lbs.)	45 (99)	
Outdoor unit	Model name			PUH-P6YGAA	
	Power supply (phase, cycle, voltage)			3 phases, 50Hz, 380-400-415V (4wires)	
		Input	kW	5.58	5.91
		Running current	A	9.03	9.56
		Starting current	A	74	
	External finish			Munsell 5Y 7/1	
	Refrigerant control			Linear expansion valve	
	Compressor			Hermetic	
		Model		ZR72KCE-TFD	
		Motor output	kW	4.2	
		Starter type		Line start	
		Protection devices		Internal thermostat, Thermal relay, HP switch, Discharge thermo.	
	Heat exchanger			Plate fin coil	
	Fan	Fan (drive) × No.		Propeller (direct) × 2	
		Fan motor output	kW	0.070+0.070	
		Air flow	m³ / min (CFM)	100 (3,530)	
	Crankcase heater		W	38	
	Defrost method			Reverse cycle	
	Noise level	Cooling	dB	57	
		Heating	dB	58	
	Dimensions	W	mm (in.)	1,050 (41-5/16)	
		D	mm (in.)	330+20(13+3/4)	
		H	mm (in.)	1,260 (49-5/8)	
	Weight		kg (lbs.)	122 (269)	
Refrigerant piping	Refrigerant			R407C	
		Charge	kg (lbs.)	4.9 (10.8)	
		Oil (Model)	L	1.774 (Ester) MMMA-POE	
	Pipe size O.D.	Liquid	mm (in.)	9.52 (3/8)	
		Gas	mm (in.)	19.05 (3/4)	
	Connection method	Indoor side		Flared	
		Outdoor side		Flared	
	Between the indoor & outdoor units	Height difference		Max. 50m	
		Piping length		Max. 50m	

NOTE:

1. Rating Conditions (ISO T1)
   Cooling : Indoor : D.B. 27℃ (80˚F), W.B. 19℃ (66˚F) Outdoor : D.B. 35℃ (95˚F), W.B. 24℃ (75˚F)
   Heating : Indoor : D.B. 20℃ (68˚F) Outdoor : D.B. 7℃ (45˚F), W.B. 6℃ (43˚F)
   Refrigerant piping length (one way) : 5m (16ft)
2. Guaranteed operating range

		Indoor	Outdoor
Cooling	Upper limit	D.B. 35℃, W.B. 22.5℃	D.B. 46℃
	Lower limit	D.B. 19℃, W.B. 15℃	D.B. -5℃
Heating	Upper limit	D.B. 28℃	D.B. 24℃, W.B. 18℃
	Lower limit	D.B. 17℃	D.B. -11℃, W.B. -12℃

※1 : [ ] Shows the total rating.
※2 : < > Shows the only booster heater rating.

3. Above data based on indicated voltage
   Indoor unit Single phase 240V 50Hz
   Outdoor unit 3 phases 415V 50Hz

A.3.2.2 Cool Only (Refrigerant R407C)

Item \ Model				PCA-P2GA	PCA-P2.5GA
Function				Cooling	
Capacity			Btu/h	18,400	22,700
			W	5,400	6,650
Total input			kW	2.40	2.65
Indoor unit	**Model name**			**PCA-P2GA**	**PCA-P2.5GA**
	Power supply			Single phase, 50Hz, 220-230-240V	
		Input	kW	0.10	0.13
		Running current	A	0.43	0.55
		Starting current	A	1.20	1.27
	External finish			Munsell 0.70Y 8.59 / 0.97	
	Heat exchanger			Plate fin coil	
	Fan	Fan (drive) × No.		Sirocco (direct) × 2	Sirocco (direct) × 3
		Fan motor output	kW	0.054	0.07
		Air flow (Lo-Mi2-Mi1-Hi)	m³ / min (CFM)	10 -11-12-13 (353-338-424-459)	14 -15-16-18 (494-530-565-635)
		External static pressure	Pa (mmAq)	0 (direct blow)	
	Booster heater		kW	—	
	Operation control & Thermostat			Remote controller & built-in	
	Noise level (Lo-Mi2-Mi1-Hi)		dB	37-38-40-42	37-39-41-43
	Unit drain pipe I.D.		mm (in.)	26 (1)	
	Dimensions	W	mm (in.)	1,000 (39-3/8)	1,310 (51-9/16)
		D	mm (in.)	680 (26-3/4)	
		H	mm (in.)	210 (8-1/4)	
	Weight		kg (lbs.)	27 (60)	34 (75)
Outdoor unit	**Model name**			**PU-P2VGAA / P2YGAA**	**PU-P2.5VGAA / P2.5YGAA**
	Power supply (phase, cycle, voltage)			Single phase, 50Hz, 220-230-240V / 3 phases, 50Hz, 380-400-415V (4wires)	
		Input	kW	2.29	2.77
		Running current	A	10.26 / 3.70	11.90 / 4.48
		Starting current	A	62 / 31	77 / 35
	External finish			Munsell 5Y 7/1	
	Refrigerant control			Linear expansion valve	
	Compressor			Hermetic	
		Model		NE36VMJMT / NE36YEKMT	NE41VMJMT / NE41YEKMT
		Motor output	kW	1.6	1.9
		Starter type		Line start	
		Protection devices		Internal thermostat, HP switch,Discharge thermo. / Thermal relay, HP switch, Discharge thermo.	
	Heat exchanger			Plate fin coil	
	Fan	Fan (drive) × No.		Propeller (direct) × 1	
		Fan motor output	kW	0.070	
		Air flow	m³ / min (CFM)	55 (1,940)	50 (1,770)
	Crankcase heater		W	38	
	Defrost method			—	
	Noise level	Cooling	dB	48	
	Dimensions	W	mm (in.)	900 (35-7/16)	
		D	mm (in.)	330+20 (13+3/4)	
		H	mm (in.)	855 (33-5/8)	
	Weight		kg (lbs.)	71 (157)	82 (181)
Refrigerant piping	Refrigerant			R407C	
		Charge	kg (lbs.)	2.6 (5.7)	3.1 (6.8)
		Oil (Model)	L	1.2 (Ester) MEL56	
	Pipe size O.D.	Liquid	mm (in.)	9.52 (3/8)	
		Gas	mm (in.)	15.88 (5/8)	
	Connection method	Indoor side		Flared	
		Outdoor side		Flared	
	Between the indoor & outdoor units	Height difference		Max. 40m	Max. 50m
		Piping length		Max. 40m	Max. 50m

NOTE:

1. Rating Conditions (ISO T1)
   Cooling : Indoor : D.B. 27℃ (80˚F), W.B. 19℃ (66˚F)
   Outdoor : D.B. 35℃ (95˚F), W.B. 24℃ (75˚F)
   Refrigerant piping length (one way) : 5m (16ft)
2. Guaranteed operating range

		Indoor	Outdoor
Cooling	Upper limit	D.B. 35˚C, W.B. 22.5˚C	D.B. 46˚C
	Lower limit	D.B. 19˚C, W.B. 15˚C	D.B. -5˚C

3. Above data based on indicated voltage
   Indoor unit Single phase 240V 50Hz
   Outdoor unit Single phase 240V 50Hz / 3 phases 415V 50Hz

Item				Model	PCA-P3GA	PCA-P4GA
Function					Cooling	
Capacity				Btu/h	25,600	33,100
				W	7,500	9,700
Total input				kW	3.40	3.64
Indoor unit	**Model name**				**PCA-P3GA**	**PCA-P4GA**
	Power supply				Single phase, 50Hz, 220-230-240V	
		Input		kW	0.13	0.16
		Running current		A	0.55	0.70
		Starting current		A	1.27	1.48
	External finish				Munsell 0.70Y 8.59 / 0.97	
	Heat exchanger				Plate fin coil	
	Fan	Fan (drive) × No.			Sirocco (direct) × 3	
		Fan motor output		kW	0.07	0.09
		Air flow (Lo-Mi2-Mi1-Hi)		m³ / min (CFM)	14-15-16-18 (494-530-565-635)	20-21-23-25 (706-741-812-883)
		External static pressure		Pa (mmAq)	0 (direct blow)	
	Booster heater			kW	—	
	Operation control & Thermostat				Remote controller & built-in	
	Noise level (Lo-Mi2-Mi1-Hi)			dB	37-39-41-43	40-41-43-45
	Unit drain pipe I.D.			mm (in.)	26 (1)	
	Dimensions		W	mm (in.)	1,310 (51-9/16)	
			D	mm (in.)	680 (26-3/4)	
			H	mm (in.)	210 (8-1/4)	270 (10-5/8)
	Weight			kg (lbs.)	34 (75)	37 (82)
Outdoor unit	**Model name**				**PU-P3VGAA / P3YGAA**	**PU-P4VGAA / P4YGAA**
	Power supply (phase, cycle, voltage)				Single phase, 50Hz, 220-230-240V / 3 phases, 50Hz, 380-400-415V (4wires)	
		Input		kW	3.27	3.43
		Running current		A	14.81 / 5.29	15.71 / 5.55
		Starting current		A	93 / 47	99 / 49
	External finish				Munsell 5Y 7/1	
	Refrigerant control				Linear expansion valve	
	Compressor				Hermetic	
		Model			NE52VNJMT / NE52YDKMT	NE56VNJMT / NE56YDKMT
		Motor output		kW	2.5	2.7
		Starter type			Line start	
		Protection devices			Internal thermostat, HP switch, Discharge thermo. / Thermal relay, HP switch, Discharge thermo.	
	Heat exchanger				Plate fin coil	
	Fan	Fan (drive) × No.			Propeller (direct) × 1	Propeller (direct) × 2
		Fan motor output		kW	0.070	0.070+0.070
		Air flow		m³ / min (CFM)	50 (1,770)	85 (3,000)
	Crankcase heater			W	38	
	Defrost method				—	
	Noise level		Cooling	dB	49	51
	Dimensions		W	mm (in.)	900 (35-7/16)	
			D	mm (in.)	330+20 (13+3/4)	
			H	mm (in.)	855 (33-5/8)	1,260 (49-5/8)
	Weight			kg (lbs.)	82 (181)	96 (212)
Refrigerant piping	Refrigerant				R407C	
		Charge		kg (lbs.)	3.3 (7.3)	4.0 (8.8)
		Oil (Model)		L	1.3 (Ester) MEL56	
	Pipe size O.D.		Liquid	mm (in.)	9.52 (3/8)	
			Gas	mm (in.)	15.88 (5/8)	19.05 (3/4)
	Connection method		Indoor side		Flared	
			Outdoor side		Flared	
	Between the indoor & outdoor units		Height difference		Max. 50m	
			Piping length		Max. 50m	

NOTE:

1. Rating Conditions (ISO T1)
   Cooling : Indoor : D.B. 27℃ (80˚F), W.B. 19℃ (66˚F)
   Outdoor : D.B. 35℃ (95˚F), W.B. 24℃ (75˚F)
   Refrigerant piping length (one way) : 5m (16ft)
2. Guaranteed operating range

		Indoor	Outdoor
Cooling	Upper limit	D.B. 35˚C, W.B. 22.5˚C	D.B. 46˚C
	Lower limit	D.B. 19˚C, W.B. 15˚C	D.B. -5˚C

3. Above data based on indicated voltage
   Indoor unit Single phase 240V 50Hz
   Outdoor unit Single phase 240V 50Hz / 3 phases 415V 50Hz

Item \ Model				PCA-P5GA	PCA-P6GA
Function				Cooling	
Capacity			Btu/h	42,300	48,700
			W	12,400	14,300
Total input			kW	4.94	5.94
Indoor unit	**Model name**			**PCA-P5GA**	**PCA-P6GA**
	Power supply			Single phase, 50Hz, 220-230-240V	
		Input	kW	0.24	
		Running current	A	1.06	
		Starting current	A	2.20	
	External finish			Munsell 0.70Y 8.59 / 0.97	
	Heat exchanger			Plate fin coil	
	Fan	Fan (drive) × No.		Sirocco (direct) × 4	
		Fan motor output	kW	0.15	
		Air flow (Lo-Mi2-Mi1-Hi)	m³ / min (CFM)	27-30-32-34 (953-1,059-1,130-1,200)	
		External static pressure	Pa (mmAq)	0 (direct blow)	
	Booster heater		kW	—	
	Operation control & Thermostat			Remote controller & built-in	
	Noise level (Lo-Mi2-Mi1-Hi)		dB	41-43-45-46	42-44-46-48
	Unit drain pipe I.D.		mm (in.)	26 (1)	
	Dimensions	W	mm (in.)	1,620 (63-3/4)	
		D	mm (in.)	680 (26-3/4)	
		H	mm (in.)	270 (10-5/8)	
	Weight		kg (lbs.)	43 (95)	45 (99)
Outdoor unit	**Model name**			**PU-P5YGAA**	**PU-P6YGAA**
	Power supply (phase, cycle, voltage)			3 phases, 50Hz, 380-400-415V (4wires)	
		Input	kW	4.70	5.58
		Running current	A	7.60	9.03
		Starting current	A	65.5	74
	External finish			Munsell 5Y 7/1	
	Refrigerant control			Linear expansion valve	
	Compressor			Hermetic	
		Model		ZR61KCE-TFD	ZR72KCE-TFD
		Motor output	kW	3.5	4.2
		Starter type		Line start	
		Protection devices		Internal thermostat, Thermal relay, HP switch, Discharge thermo.	
	Heat exchanger			Plate fin coil	
	Fan	Fan (drive) × No.		Propeller (direct) × 2	
		Fan motor output	kW	0.070+0.070	
		Air flow	m³ / min (CFM)	95 (3,360)	100 (3,530)
	Crankcase heater		W	38	
	Defrost method			—	
	Noise level	Cooling	dB	55	57
	Dimensions	W	mm (in.)	1,050 (41-5/16)	
		D	mm (in.)	330+20 (13+3/4)	
		H	mm (in.)	1,260 (49-5/8)	
	Weight		kg (lbs.)	122 (269)	
Refrigerant piping	Refrigerant			R407C	
		Charge	kg (lbs.)	4.6 (10.1)	4.9 (10.8)
		Oil (Model)	L	1.690 MMMA-POE	1.774 MMMA-POE
	Pipe size O.D.	Liquid	mm (in.)	9.52 (3/8)	
		Gas	mm (in.)	19.05 (3/4)	
	Connection method	Indoor side		Flared	
		Outdoor side		Flared	
	Between the indoor & outdoor units	Height difference		Max. 50m	
		Piping length		Max. 50m	

NOTE:

1. Rating Conditions (ISO T1)
   Cooling : Indoor : D.B. 27℃ (80˚F), W.B. 19℃ (66˚F)
   Outdoor : D.B. 35℃ (95˚F), W.B. 24℃ (75˚F)
   Refrigerant piping length (one way) : 5m (16ft)
2. Guaranteed operating range

		Indoor	Outdoor
Cooling	Upper limit	D.B. 35˚C, W.B. 22.5˚C	D.B. 46˚C
	Lower limit	D.B. 19˚C, W.B. 15˚C	D.B. -5˚C

3. Above data based on indicated voltage
   Indoor unit Single phase 240V 50Hz
   Outdoor unit 3 phases 415V 50Hz

A.3.3 ELECTRICAL DATA

A.3.3.1 Heat Pump (Refrigerant R407C)

Indoor unit ..... 220V 50Hz Single phase Outdoor unit .... 220V 50Hz Single phase / 380V 50Hz 3 phases

Model	Indoor unit	With heater	PCH-P2GAH				PCH-P2.5GAH			
		Without heater	PCA-P2GA				PCA-P2.5GA			
	Outdoor unit		PUH-P2VGAA		PUH-P2YGAA		PUH-P2.5VGAA		PUH-P2.5YGAA	
Mode			Cool	Heat	Cool	Heat	Cool	Heat	Cool	Heat
Capacity (W)			5,300	6,150 (7,330)	5,300	6,150 (7,330)	6,550	7,200 (8,960)	6,550	7,200 (8,960)
Total Input (kW) (In + Out) (In + Out + Heater)			2.31	2.30 (3.48)	2.31	2.30 (3.48)	2.58	2.60 (4.36)	2.58	2.60 (4.36)
Indoor unit	Input (kW)		0.08	0.08 <1.18>	0.08	0.08 <1.18>	0.11	0.11 <1.76>	0.11	0.11 <1.76>
Indoor unit	Current (A)		0.38	0.38 <5.36>	0.38	0.38 <5.36>	0.51	0.51 <8.00>	0.51	0.51 <8.00>
Outdoor unit	Starting current (A)		62	62	31	31	71	71	32	32
Outdoor unit	Current (A)		11.19	11.53	4.05	4.17	12.98	12.56	4.89	4.73

※ ( ) shows the total rating. < > shows the only booster heater rating.

Indoor unit ..... 230V 50Hz Single phase Outdoor unit .... 230V 50Hz Single phase / 400V 50Hz 3 phases

Model	Indoor unit	With heater	PCH-P2GAH				PCH-P2.5GAH			
		Without heater	PCA-P2GA				PCA-P2.5GA			
	Outdoor unit		PUH-P2VGAA		PUH-P2YGAA		PUH-P2.5VGAA		PUH-P2.5YGAA	
Mode			Cool	Heat	Cool	Heat	Cool	Heat	Cool	Heat
Capacity (W)			5,350	6,200 (6,930)	5,350	6,200 (6,930)	6,600	7,250 (9,180)	6,600	7,250 (9,180)
Total Input (kW) (In + Out) (In + Out + Heater)			2.35	2.34 (3.07)	2.35	2.34 (3.07)	2.62	2.66 (4.59)	2.62	2.66 (4.59)
Indoor unit	Input (kW)		0.09	0.09 <1.29>	0.09	0.09 <1.29>	0.12	0.12 <1.93>	0.12	0.12 <1.93>
Indoor unit	Current (A)		0.41	0.41 <5.61>	0.41	0.41 <5.61>	0.53	0.53 <8.39>	0.53	0.53 <8.39>
Outdoor unit	Starting current (A)		62	62	31	31	74	74	34	34
Outdoor unit	Current (A)		10.71	11.03	3.84	3.96	12.42	12.01	4.65	4.50

※ ( ) shows the total rating. < > shows the only booster heater rating.

Indoor unit ..... 240V 50Hz Single phase Outdoor unit ..... 240V 50Hz Single phase / 415V 50Hz 3 phases

Model	Indoor unit	With heater	PCH-P2GAH				PCH-P2.5GAH			
		Without heater	PCA-P2GA				PCA-P2.5GA			
	Outdoor unit		PUH-P2VGAA		PUH-P2YGAA		PUH-P2.5VGAA		PUH-P2.5YGAA	
Mode			Cool	Heat	Cool	Heat	Cool	Heat	Cool	Heat
Capacity (W)			5,400	6,250 (7,650)	5,400	6,250 (7,650)	6,650	7,300 (9,400)	6,650	7,300 (9,400)
Total Input (kW) (In + Out) (In + Out + Heater)			2.40	2.40 (3.80)	2.40	2.40 (3.80)	2.65	2.71 (4.81)	2.65	2.71 (4.81)
Indoor unit	Input (kW)		0.10	0.10 <1.40>	0.10	0.10 <1.40>	0.13	0.13 <2.10>	0.13	0.13 <2.10>
Indoor unit	Current (A)		0.43	0.43 <5.83>	0.43	0.43 <5.83>	0.55	0.55 <8.75>	0.55	0.55 <8.75>
Outdoor unit	Starting current (A)		62	62	31	31	77	77	35	35
Outdoor unit	Current (A)		10.26	10.57	3.70	3.82	11.90	11.51	4.48	4.34

※ ( ) shows the total rating. < > shows the only booster heater rating.

Indoor unit ..... 220V 50Hz Single phase Outdoor unit .... 220V 50Hz Single phase / 380V 50Hz 3 phases

Model	Indoor unit: With heater	PCH-P3GAH				PCH-P4GAH			
	Indoor unit: Without heater	PCA-P3GA				PCA-P4GA			
	Outdoor unit	PUH-P3VGAA		PUH-P3YGAA		PUH-P4VGAA		PUH-P4YGAA	
Mode		Cool	Heat	Cool	Heat	Cool	Heat	Cool	Heat
Capacity (W)		7,400	9,100 (10,860)	7,400	9,100 (10,860)	9,500	10,550 (12,820)	9,500	10,550 (12,820)
Total Input (kW) (In + Out) (In + Out + Heater)		3.36	3.47 (5.23)	3.36	3.47 (5.23)	3.59	3.78 (6.05)	3.59	3.78 (6.05)
Indoor unit	Input (kW)	0.11	0.11 <1.76>	0.11	0.11 <1.76>	0.14	0.14 <2.27>	0.14	0.14 <2.27>
Indoor unit	Current (A)	0.51	0.51 <8.00>	0.51	0.51 <8.00>	0.68	0.68 <10.32>	0.68	0.68 <10.32>
Outdoor unit	Starting current (A)	85	85	43	43	91	91	44	44
Outdoor unit	Current (A)	16.16	17.19	5.78	6.15	17.13	18.08	6.06	6.40

※ ( ) shows the total rating. < > shows the only booster heater rating.

Indoor unit ..... 230V 50Hz Single phase Outdoor unit .... 230V 50Hz Single phase / 400V 50Hz 3 phases

Model	Indoor unit: With heater	PCH-P3GAH				PCH-P4GAH			
	Indoor unit: Without heater	PCA-P3GA				PCA-P4GA			
	Outdoor unit	PUH-P3VGAA		PUH-P3YGAA		PUH-P4VGAA		PUH-P4YGAA	
Mode		Cool	Heat	Cool	Heat	Cool	Heat	Cool	Heat
Capacity (W)		7,450	9,150 (11,080)	7,450	9,150 (11,080)	9,600	10,600 (13,080)	9,600	10,600 (13,080)
Total Input (kW) (In + Out) (In + Out + Heater)		3.37	3.48 (5.41)	3.37	3.48 (5.41)	3.62	3.81 (6.29)	3.62	3.81 (6.29)
Indoor unit	Input (kW)	0.12	0.12 <1.93>	0.12	0.12 <1.93>	0.15	0.15 <2.48>	0.15	0.15 <2.48>
Indoor unit	Current (A)	0.53	0.53 <8.39>	0.53	0.53 <8.39>	0.69	0.69 <10.78>	0.69	0.69 <10.78>
Outdoor unit	Starting current (A)	89	89	45	45	95	95	47	47
Outdoor unit	Current (A)	15.45	16.45	5.49	5.84	16.39	17.30	5.76	6.08

※ ( ) shows the total rating. < > shows the only booster heater rating.

Indoor unit ..... 240V 50Hz Single phase Outdoor unit ..... 240V 50Hz Single phase / 415V 50Hz 3 phases

Model	Indoor unit: With heater	PCH-P3GAH				PCH-P4GAH			
	Indoor unit: Without heater	PCA-P3GA				PCA-P4GA			
	Outdoor unit	PUH-P3VGAA		PUH-P3YGAA		PUH-P4VGAA		PUH-P4YGAA	
Mode		Cool	Heat	Cool	Heat	Cool	Heat	Cool	Heat
Capacity (W)		7,500	9,200 (11,300)	7,500	9,200 (11,300)	9,700	10,650 (13,350)	9,700	10,650 (13,350)
Total Input (kW) (In + Out) (In + Out + Heater)		3.40	3.50 (5.60)	3.40	3.50 (5.60)	3.64	3.83 (6.53)	3.64	3.83 (6.53)
Indoor unit	Input (kW)	0.13	0.13 <2.10>	0.13	0.13 <2.10>	0.16	0.16 <2.70>	0.16	0.16 <2.70>
Indoor unit	Current (A)	0.55	0.55 <8.75>	0.55	0.55 <8.75>	0.70	0.70 <11.25>	0.70	0.70 <11.25>
Outdoor unit	Starting current (A)	93	93	47	47	99	99	49	49
Outdoor unit	Current (A)	14.81	15.76	5.29	5.63	15.71	16.58	5.55	5.86

※ ( ) shows the total rating. < > shows the only booster heater rating.

Indoor unit ..... 220V 50Hz Single phase Outdoor unit .... 380V 50Hz 3 phases

Model						
Model	Indoor unit	With heater	PCH-P5GAH		PCH-P6GAH	
		Without heater	PCA-P5GA		PCA-P6GA	
	Outdoor unit		PUH-P5YGAA		PUH-P6YGAA	
Mode			Cool	Heat	Cool	Heat
Capacity (W)			12,200	14,700 (17,210)	14,100	16,900 (19,420)
Total Input (kW) (In + Out) (In + Out + Heater)			4.89	5.08 (7.60)	5.83	6.21 (8.73)
Indoor unit	Input (kW)		0.20	0.20 <2.52>	0.20	0.20 <2.52>
Indoor unit	Current (A)		0.96	0.96 <11.46>	0.96	0.96 <11.46>
Outdoor unit	Starting current (A)		65.5	65.5	74	74
Outdoor unit	Current (A)		8.30	8.90	9.86	10.44

※ ( ) shows the total rating. < > shows the only booster heater rating.

Indoor unit ..... 230V 50Hz Single phase Outdoor unit .... 400V 50Hz 3 phases

Model						
Model	Indoor unit	With heater	PCH-P5GAH		PCH-P6GAH	
		Without heater	PCA-P5GA		PCA-P6GA	
	Outdoor unit		PUH-P5YGAA		PUH-P6YGAA	
Mode			Cool	Heat	Cool	Heat
Capacity (W)			12,300	14,800 (17,550)	14,200	17,000 (19,760)
Total Input (kW) (In + Out) (In + Out + Heater)			4.91	5.11 (7.87)	5.89	6.24 (9.00)
Indoor unit	Input (kW)		0.22	0.22 <2.76>	0.22	0.22 <2.76>
Indoor unit	Current (A)		1.01	1.01 <12.00>	1.01	1.01 <12.00>
Outdoor unit	Starting current (A)		65.5	65.5	74	74
Outdoor unit	Current (A)		7.89	8.46	9.37	9.92

※ ( ) shows the total rating. < > shows the only booster heater rating.

Indoor unit ..... 240V 50Hz Single phase Outdoor unit ..... 415V 50Hz 3 phases

Model						
Model	Indoor unit	With heater	PCH-P5GAH		PCH-P6GAH	
		Without heater	PCA-P5GA		PCA-P6GA	
	Outdoor unit		PUH-P5YGAA		PUH-P6YGAA	
Mode			Cool	Heat	Cool	Heat
Capacity (W)			12,400	14,900 (17,880)	14,300	17,100 (20,100)
Total Input (kW) (In + Out) (In + Out + Heater)			4.94	5.14 (8.14)	5.94	6.27 (9.27)
Indoor unit	Input (kW)		0.24	0.24 <3.00>	0.24	0.24 <3.00>
Indoor unit	Current (A)		1.06	1.06 <12.50>	1.06	1.06 <12.50>
Outdoor unit	Starting current (A)		65.5	65.5	74	74
Outdoor unit	Current (A)		7.60	8.15	9.03	9.56

※ ( ) shows the total rating. < > shows the only booster heater rating.

A.3.3.2 Cool Only (Refrigerant R407C)

Indoor unit ..... 220V 50Hz Single phase Outdoor unit .... 220V 50Hz Single phase / 380V 50Hz 3 phases

Model	Indoor unit	PCA-P2GA		PCA-P2.5GA		PCA-P3GA	
	Outdoor unit	PU-P2VGAA	PU-P2YGAA	PU-P2.5VGAA	PU-P2.5YGAA	PU-P3VGAA	PU-P3YGAA
Mode		Cool	Cool	Cool	Cool	Cool	Cool
Capacity (W)		5,300	5,300	6,550	6,550	7,400	7,400
Total Input (kW) (In + Out) (In + Out + Heater)		2.31	2.31	2.58	2.58	3.36	3.36
Indoor unit	Input (kW)	0.08	0.08	0.11	0.11	0.11	0.11
Indoor unit	Current (A)	0.38	0.38	0.51	0.51	0.51	0.51
Outdoor unit	Starting current (A)	62	31	71	32	85	43
Outdoor unit	Current (A)	11.19	4.05	12.98	4.89	16.16	5.78

Indoor unit ..... 230V 50Hz Single phase Outdoor unit .... 230V 50Hz Single phase / 400V 50Hz 3 phases

Model	Indoor unit	PCA-P2GA		PCA-P2.5GA		PCA-P3GA	
	Outdoor unit	PU-P2VGAA	PU-P2YGAA	PU-P2.5VGAA	PU-P2.5YGAA	PU-P3VGAA	PU-P3YGAA
Mode		Cool	Cool	Cool	Cool	Cool	Cool
Capacity (W)		5,350	5,350	6,600	6,600	7,450	7,450
Total Input (kW) (In + Out) (In + Out + Heater)		2.35	2.35	2.62	2.62	3.37	3.37
Indoor unit	Input (kW)	0.09	0.09	0.12	0.12	0.12	0.12
Indoor unit	Current (A)	0.41	0.41	0.53	0.53	0.53	0.53
Outdoor unit	Starting current (A)	62	31	74	34	89	45
Outdoor unit	Current (A)	10.71	3.84	12.42	4.65	15.45	5.49

Indoor unit ..... 240V 50Hz Single phase Outdoor unit .... 240V 50Hz Single phase / 415V 50Hz 3 phases

Model	Indoor unit	PCA-P2GA		PCA-P2.5GA		PCA-P3GA	
	Outdoor unit	PU-P2VGAA	PU-P2YGAA	PU-P2.5VGAA	PU-P2.5YGAA	PU-P3VGAA	PU-P3YGAA
Mode		Cool	Cool	Cool	Cool	Cool	Cool
Capacity (W)		5,400	5,400	6,650	6,650	7,500	7,500
Total Input (kW) (In + Out) (In + Out + Heater)		2.40	2.40	2.65	2.65	3.40	3.40
Indoor unit	Input (kW)	0.10	0.10	0.13	0.13	0.13	0.13
Indoor unit	Current (A)	0.43	0.43	0.55	0.55	0.55	0.55
Outdoor unit	Starting current (A)	62	31	77	35	93	47
Outdoor unit	Current (A)	10.26	3.70	11.90	4.48	14.81	5.29

Indoor unit ..... 220V 50Hz Single phase Outdoor unit .... 220V 50Hz Single phase / 380V 50Hz 3 phases

Model	Indoor unit	PCA-P4GA		PCA-P5GA	PCA-P6GA
	Outdoor unit	PU-P4VGAA	PU-P4YGAA	PU-P5YGAA	PU-P6YGAA
Mode		Cool	Cool	Cool	Cool
Capacity (W)		9,500	9,500	12,200	14,100
Total Input (kW) (In + Out) (In + Out + Heater)		3.59	3.59	4.89	5.83
Indoor unit	Input (kW)	0.14	0.14	0.20	0.20
Indoor unit	Current (A)	0.68	0.68	0.96	0.96
Outdoor unit	Starting current (A)	91	44	65.5	74
Outdoor unit	Current (A)	17.13	6.06	8.30	9.86

Indoor unit ..... 230V 50Hz Single phase Outdoor unit .... 230V 50Hz Single phase / 400V 50Hz 3 phases

Model	Indoor unit	PCA-P4GA		PCA-P5GA	PCA-P6GA
	Outdoor unit	PU-P4VGAA	PU-P4YGAA	PU-P5YGAA	PU-P6YGAA
Mode		Cool	Cool	Cool	Cool
Capacity (W)		9,600	9,600	12,300	14,200
Total Input (kW) (In + Out) (In + Out + Heater)		3.62	3.62	4.91	5.89
Indoor unit	Input (kW)	0.15	0.15	0.22	0.22
Indoor unit	Current (A)	0.69	0.69	1.01	1.01
Outdoor unit	Starting current (A)	95	47	65.5	74
Outdoor unit	Current (A)	16.39	5.76	7.89	9.37

Indoor unit ..... 240V 50Hz Single phase Outdoor unit .... 240V 50Hz Single phase / 415V 50Hz 3 phases

Model	Indoor unit	PCA-P4GA		PCA-P5GA	PCA-P6GA
	Outdoor unit	PU-P4VGAA	PU-P4YGAA	PU-P5YGAA	PU-P6YGAA
Mode		Cool	Cool	Cool	Cool
Capacity (W)		9,700	9,700	12,400	14,300
Total Input (kW) (In + Out) (In + Out + Heater)		3.64	3.64	4.94	5.94
Indoor unit	Input (kW)	0.16	0.16	0.24	0.24
Indoor unit	Current (A)	0.70	0.70	1.06	1.06
Outdoor unit	Starting current (A)	99	49	65.5	74
Outdoor unit	Current (A)	15.71	5.55	7.60	9.03

A.3.4 OUTLINES AND DIMENSIONS

PCH-P2GAH
PCA-P2GA

Unit: mm

NOTE:
1. Use M10 or W3/8 screws for anchor bolt.
2. Please be sure when installing the drain-up machine (option parts). Refrigerant pipe will be only upper drain pipe arrangement.

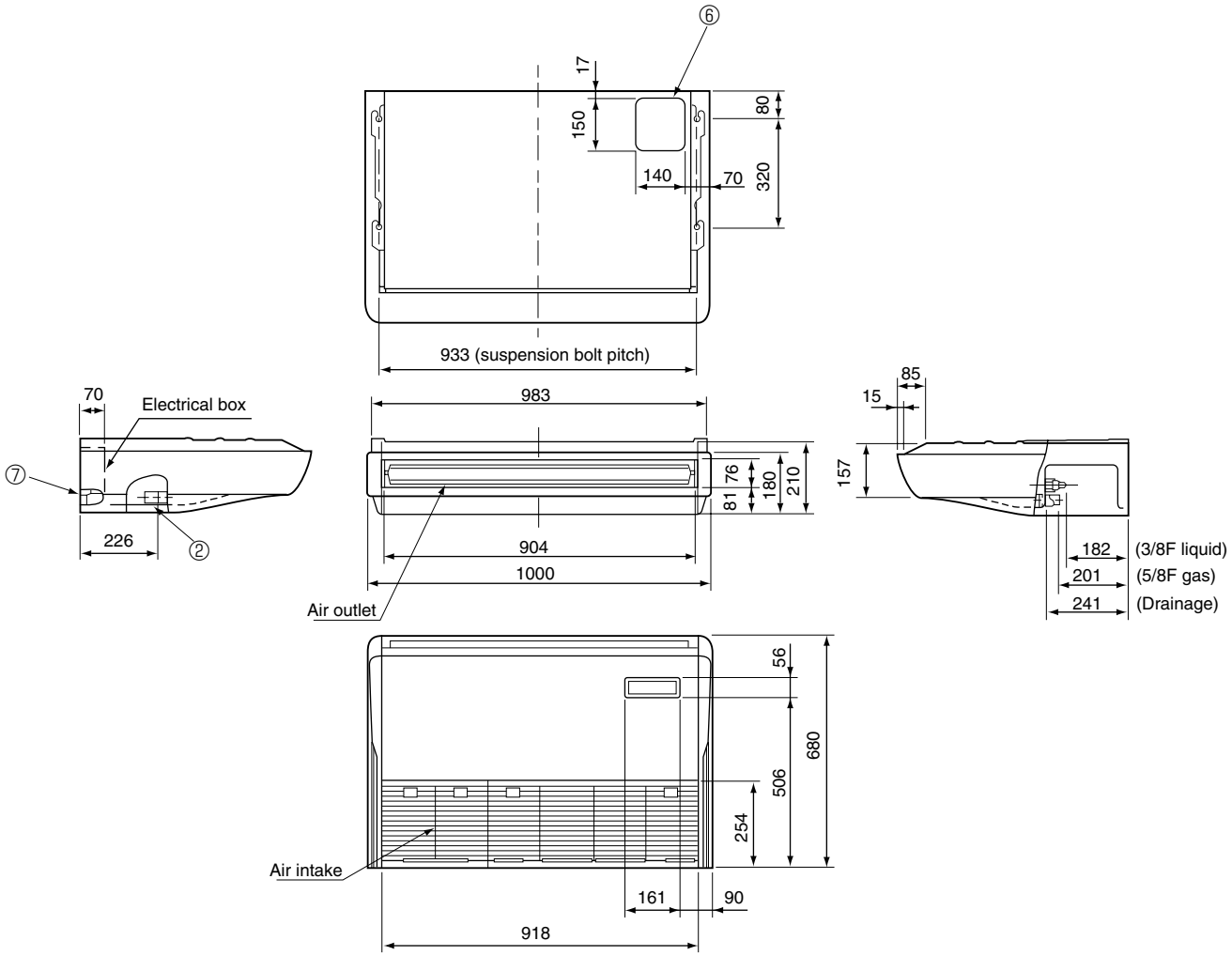

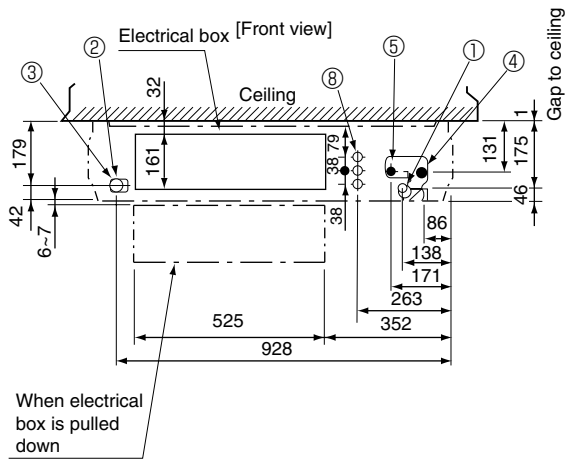

① Drainage pipe connection (26mm I.D.)
② Drainage pipe connection (for the left arrangement)
③ Knock out hole for left drain-piping arrangement
④ Refrigerant-pipe connection (gas pipe side/flared connection)
⑤ Refrigerant-pipe connection (liquid pipe side/flared connection)
⑥ Knock out hole for upper drain pipe arrangement
⑦ Knock out hole for left drain pipe arrangement
⑧ Knock out hole for wiring arrangement

PCH-P2.5GAH, PCA-P2.5GA
PCH-P3GAH, PCA-P3GA

Unit: mm

NOTE:
1. Use M10 or W3/8 screws for anchor bolt.
2. Please be sure when installing the drain-up machine (option parts). Refrigerant pipe will be only upper drain pipe arrangement.

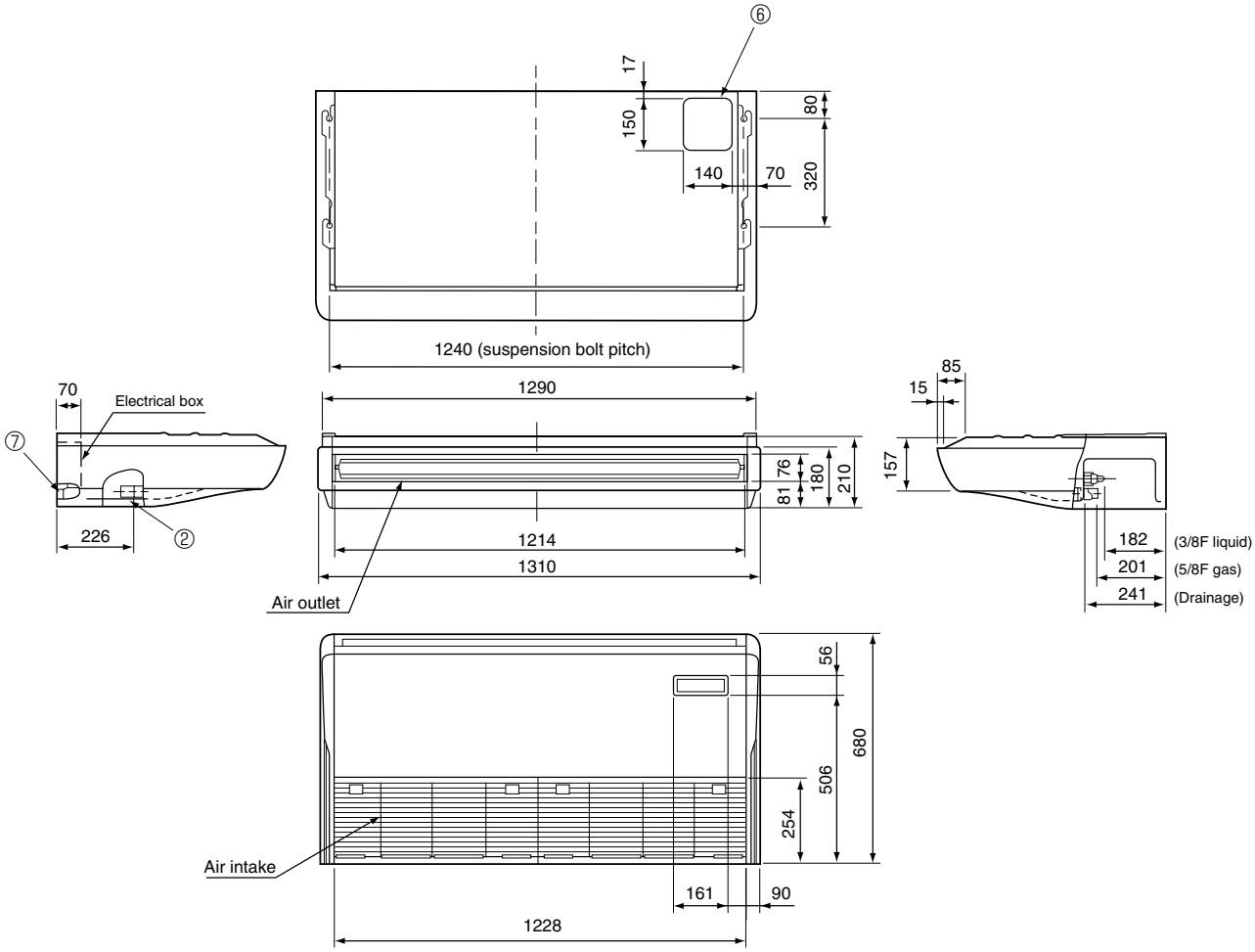

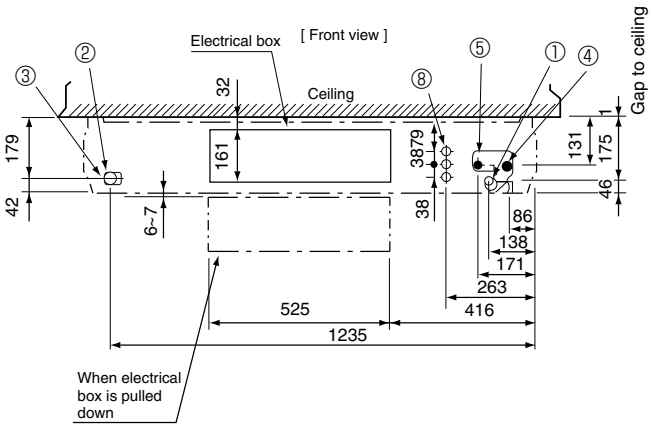

① Drainage pipe connection (26mm I.D.)
② Drainage pipe connection (for the left arrangement)
③ Knock out hole for left drain-piping arrangement
④ Refrigerant-pipe connection (gas pipe side/flared connection)
⑤ Refrigerant-pipe connection (liquid pipe side/flared connection)
⑥ Knock out hole for upper drain pipe arrangement
⑦ Knock out hole for left drain pipe arrangement
⑧ Knock out hole for wiring arrangement

PCH-P4GAH, PCA-P4GA

Unit: mm

NOTE:
1. Use M10 or W3/8 screws for anchor bolt.
2. Please be sure when installing the drain-up machine (option parts). Refrigerant pipe will be only upper drain pipe arrangement.

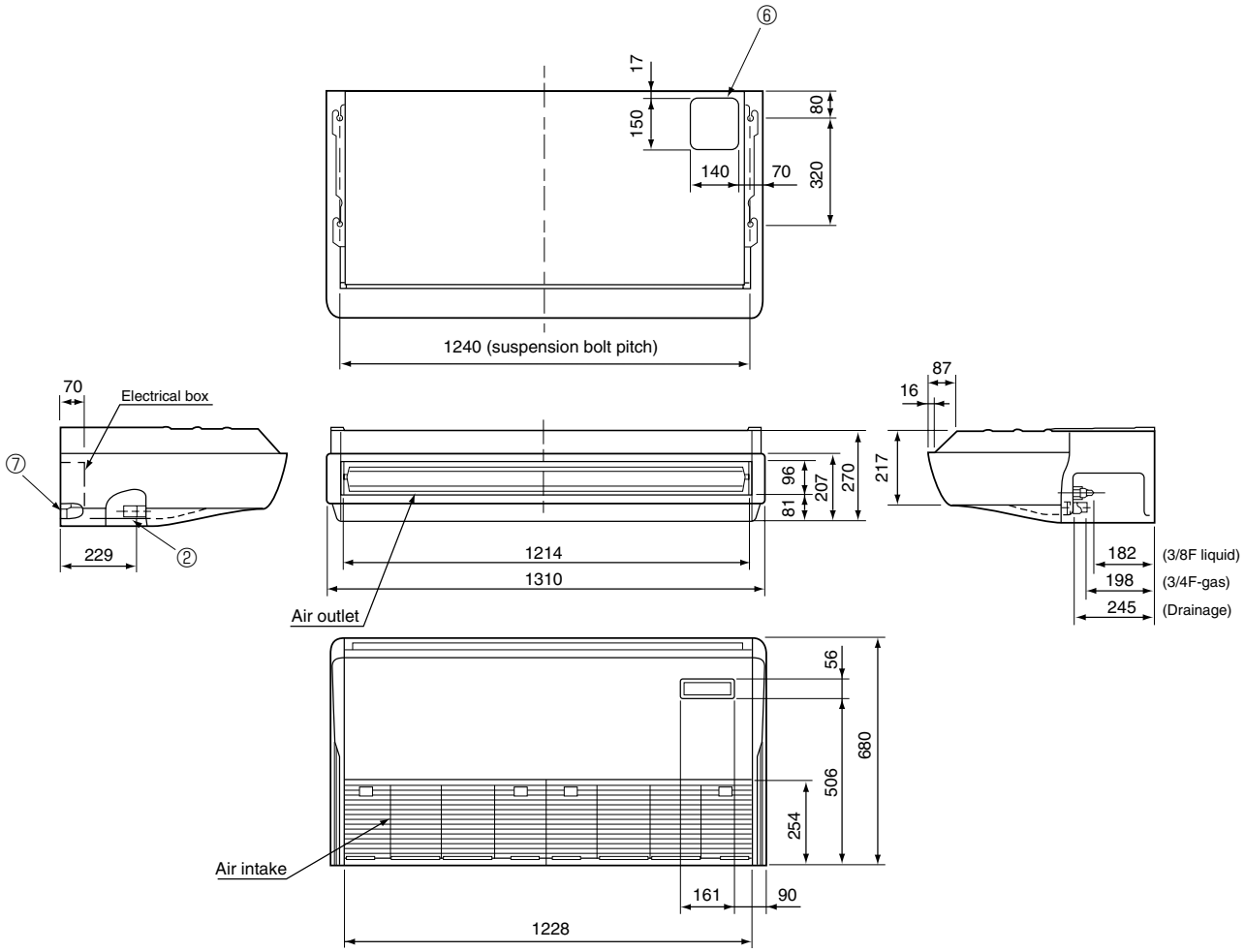

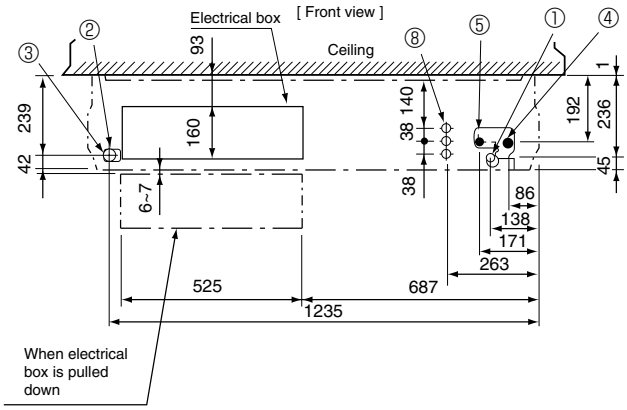

① Drainage pipe connection (26mm I.D.)
② Drainage pipe connection (for the left arrangement)
③ Knock out hole for left drain-piping arrangement
④ Refrigerant-pipe connection (gas pipe side/flared connection)
⑤ Refrigerant-pipe connection (liquid pipe side/flared connection)
⑥ Knock out hole for upper drain pipe arrangement
⑦ Knock out hole for left drain pipe arrangement
⑧ Knock out hole for wiring arrangement

PCH-P5GAH, PCA-P5GA
PCH-P6GAH, PCA-P6GA

Unit: mm

NOTE:
1. Use M10 or W3/8 screws for anchor bolt.
2. Please be sure when installing the drain-up machine (option parts). Refrigerant pipe will be only upper drain pipe arrangement.

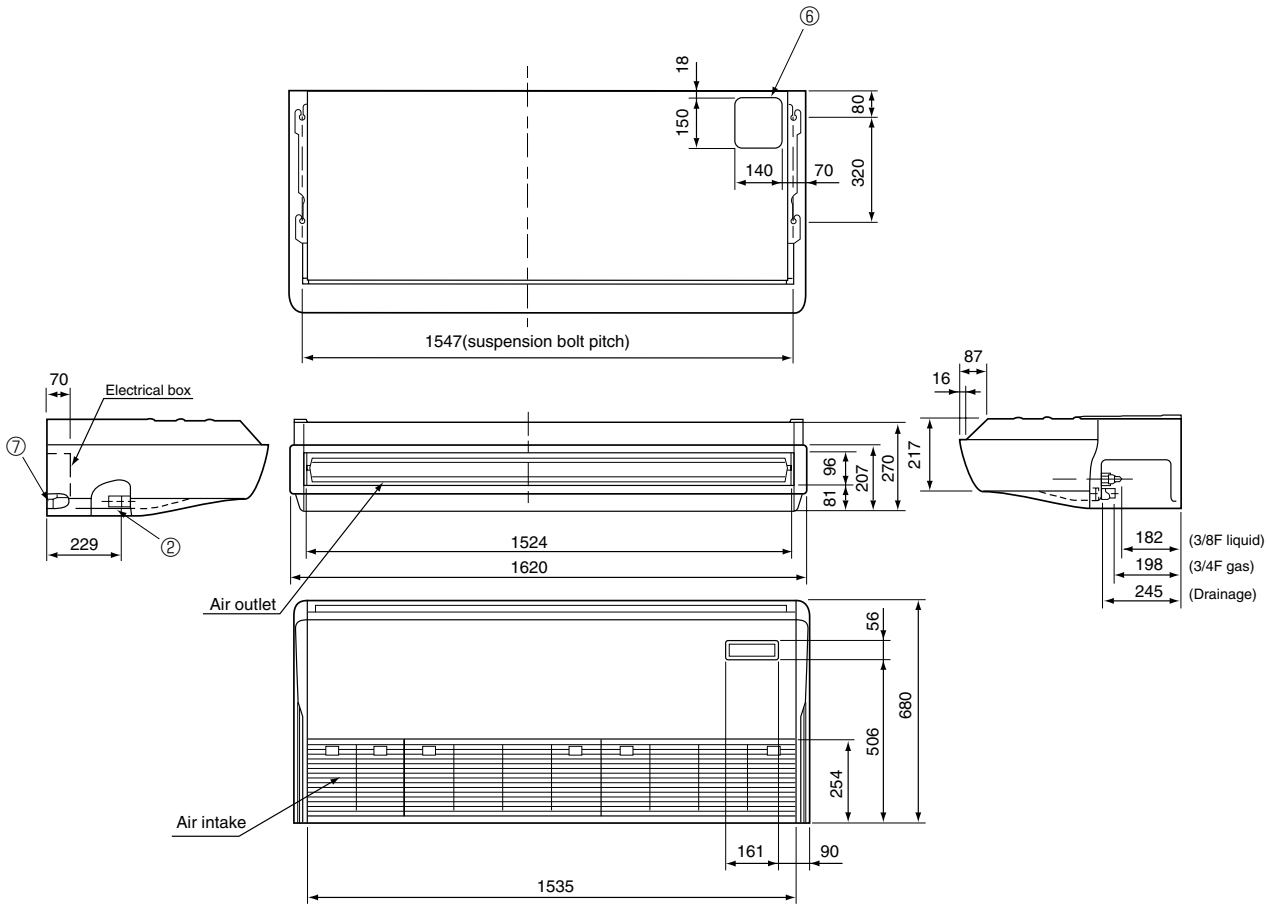

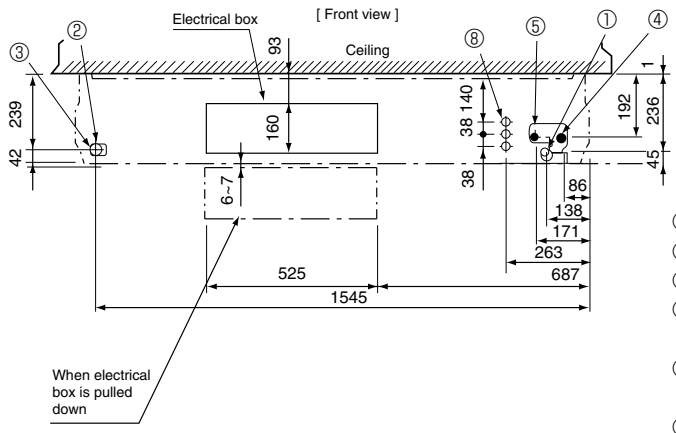

① Drainage pipe connection (26mm I.D.)
② Drainage pipe connection (for the left arrangement)
③ Knock out hole for left drain-piping arrangement
④ Refrigerant-pipe connection (gas pipe side/flared connection)
⑤ Refrigerant-pipe connection (liquid pipe side/flared connection)
⑥ Knock out hole for upper drain pipe arrangement
⑦ Knock out hole for left drain pipe arrangement
⑧ Knock out hole for wiring arrangement

A.3.5 WIRING DIAGRAM

PCH-P2GAH, PCH-P2.5GAH, PCH-P3GAH, PCH-P4GAH, PCH-P5GAH, PCH-P6GAH PCA-P2GA, PCA-P2.5GA, PCA-P3GA, PCA-P4GA, PCA-P5GA, PCA-P6GA

SYMBOL	NAME
P.B	INDOOR POWER BOARD
F1	FUSE(4A)
ZNR	VARISTOR
I.B	INDOOR CONTROLLER BOARD
CN2L	CONNECTOR(LOSSNAY)
CN32	CONNECTOR(REMOTE SWITCH)
CN41	CONNECTOR(HA TERMINAL-A)
SW1	JUMPER WIRE(MODEL SELECTION)
SW2	JUMPER WIRE(CAPACITY CODE)
SWE	SWITCH(EMERGENCY OPERATION)
X1	RELAY(DRAIN PUMP)
X4	RELAY(FAN MOTOR)
FC	FAN PHASE CONTROL
LED1	POWER SUPPLY(I.B)
LED2	POWER SUPPLY(R.B)
LED3	TRANSMISSION(INDOOR-OUTDOOR)
C	CAPACITOR(FAN MOTOR)
MF	FAN MOTOR

SYMBOL	NAME
MV	VANE MOTOR
DP	DRAIN-UP MACHINE(OPTION)
DS	DRAIN SENSOR(OPTION)
TB2	TERMINAL BLOCK(HEATER)
TB4	TERMINAL BLOCK(INDOOR/OUTDOOR CONNECTING LINE)
TB5	TERMINAL BLOCK(REMOTE CONTROLLER TRANSMISSION LINE)
TH1	ROOM TEMPERATURE THERMISTOR (0℃/15kΩ, 25℃/5.4kΩ DETECT)
TH2	PIPE TEMPERATURE THERMISTOR/LIQUID (0℃/15kΩ, 25℃/5.4kΩ DETECT)
TH5	CONDENSER/ EVAPORATOR TEMPERATURE THERMISTOR (0℃/15kΩ, 25℃/5.4kΩ DETECT)
R.B	REMOTE CONTROLLER BOARD
CN2	CONNECTOR(SCHEDULE TIMER)
TB6	TERMINAL BLOCK(REMOTE CONTROLLER TRANSMISSION LINE)

SYMBOL	NAME
W.B	WIRELESS REMOTE CONTROLLER BOARD(OPTION)
RU	RECEIVING UNIT
BZ	BUZZER
LED1	LED(RUN INDICATOR)
LED2	LED(HOT ADJUST)
SW1	SWITCH(HEATING ON/OFF)
SW2	SWITCH(COOLING ON/OFF)
HEATER	
FS1,2	THERMAL FUSE<98℃10A:2GAH / 117℃16A:4GAH 110℃16A:2.5,3GAH,5,6GAH>
H1	HEATER
26H	HEATER THERMAL SWITCH
88H	HEATER CONTACTOR

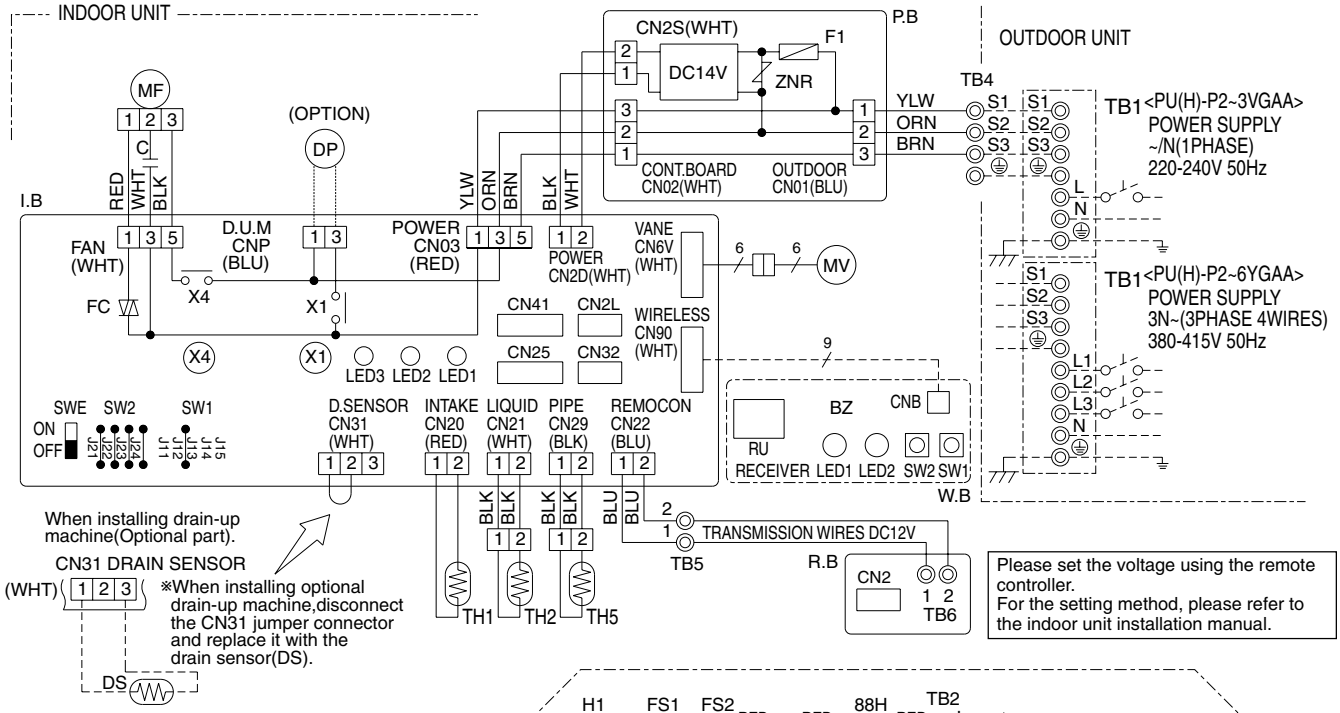

Please set the voltage using the remote controller.
For the setting method, please refer to the indoor unit installation manual.

MODELS	SW1	SW2 Manufacture	SW2 Service board
2GA(H)	<For manufacture> J11 J12 J13 J14 J15	J21 J22 J23 J24	1 2 3 4 ON OFF
2.5GA(H)		J21 J22 J23 J24	1 2 3 4 ON OFF
3GA(H)		J21 J22 J23 J24	1 2 3 4 ON OFF
4GA(H)	<For service board> 1 2 3 4 5 ON OFF	J21 J22 J23 J24	1 2 3 4 ON OFF
5GA(H)		J21 J22 J23 J24	1 2 3 4 ON OFF
6GA(H)		J21 J22 J23 J24	1 2 3 4 ON OFF

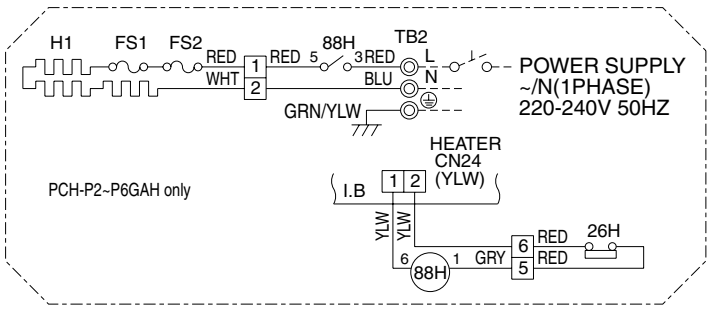

NOTE:

1. Since the outdoor side electric wiring may change be sure to check the outdoor unit electric wiring for servicing.
2. Indoor and outdoor connecting wires are made with polarities,make wiring matching terminal numbers (S1,S2,S3).
3. Make sure that the main power supply of the booster heater is independent.
4. Symbols used in wiring diagram above are, ☐☐☐:Connector, ◎:Terminal block.

A.3.6 REFRIGERANT SYSTEM DIAGRAM

PCH-P2GAH, PCA-P2GA / PUH-P2VGAA, PUH-P2YGAA
PCH-P2.5GAH, PCA-P2.5GA / PUH-P2.5VGAA, PUH-P2.5YGAA
PCH-P3GAH, PCA-P3GA / PUH-P3VGAA, PUH-P3YGAA

Unit: mm

INDOOR UNIT **OUTDOOR UNIT**

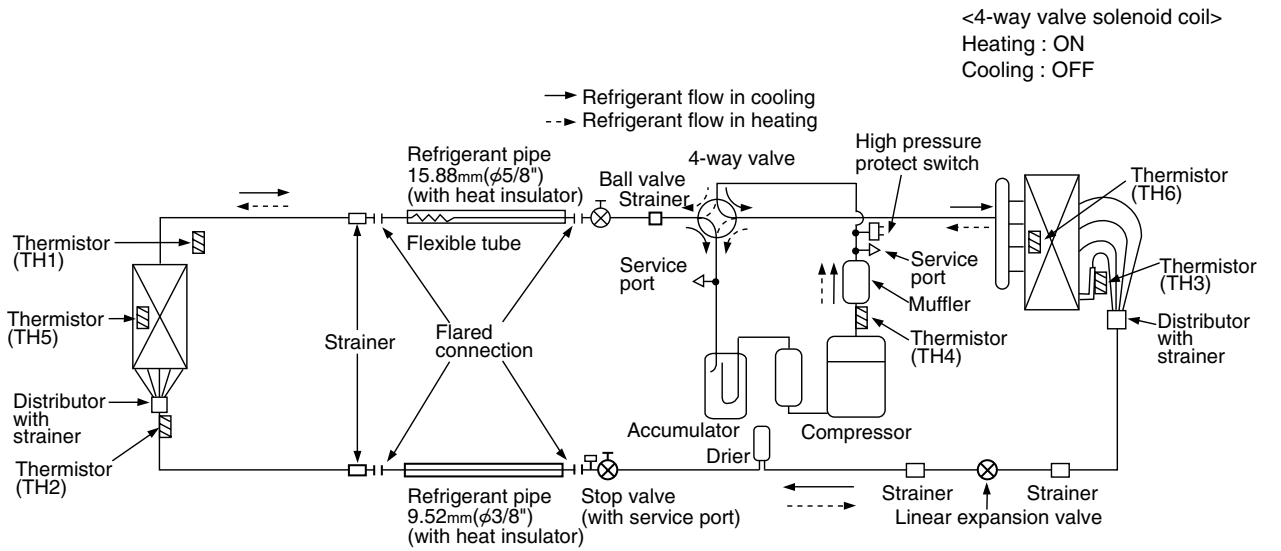

PCH-P4GAH, PCA-P4GA / PUH-P4VGAA, PUH-P4YGAA

INDOOR UNIT **OUTDOOR UNIT**

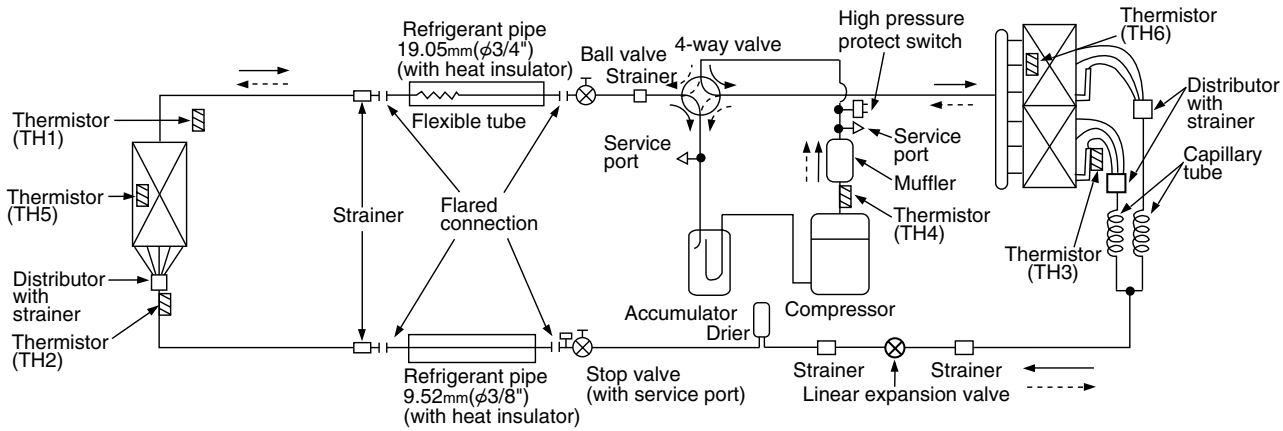

PCH-P5GAH, PCA-P5GA / PUH-P5YGAA
PCH-P6GAH, PCA-P6GA / PUH-P6YGAA

Unit: mm

INDOOR UNIT **OUTDOOR UNIT**

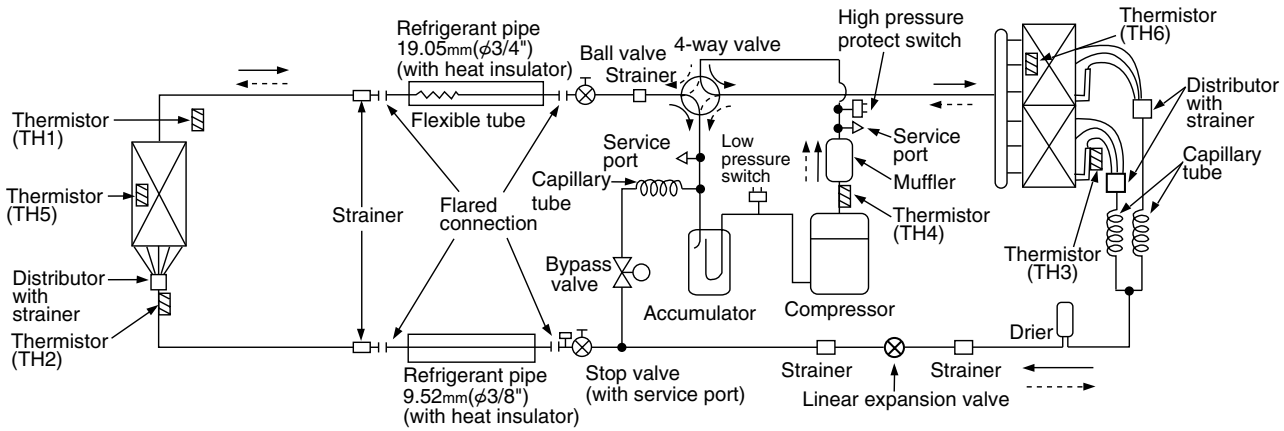

PCA-P2GA / PU-P2VGAA, PU-P2YGAA
PCA-P2.5GA / PU-P2.5VGAA, PU-P2.5YGAA
PCA-P3GA / PU-P3VGAA, PU-P3YGAA

Unit: mm

INDOOR UNIT **OUTDOOR UNIT**

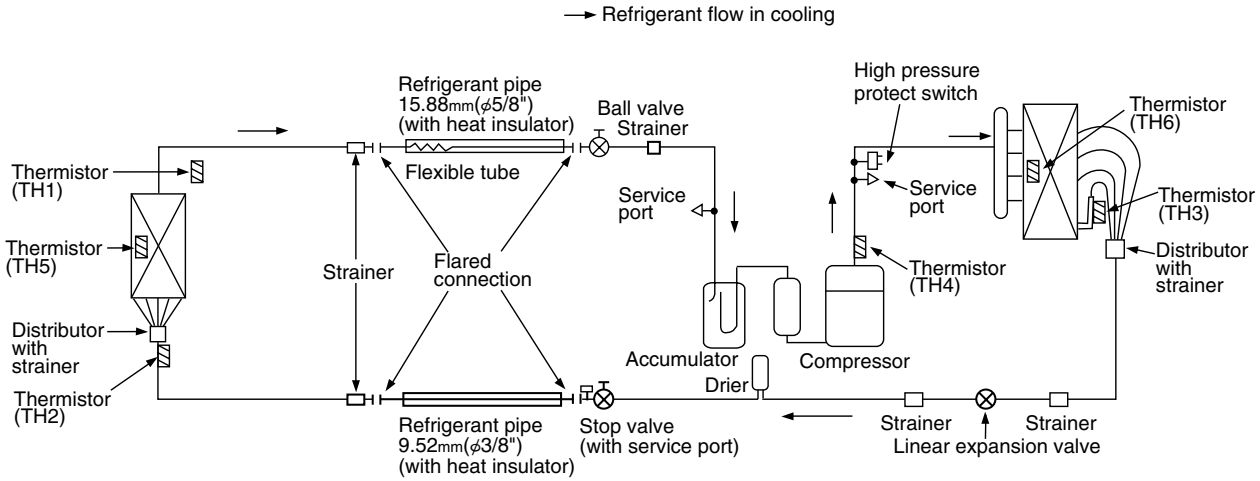

PCA-P4GA / PU-P4VGAA, PU-P4YGAA

INDOOR UNIT **OUTDOOR UNIT**

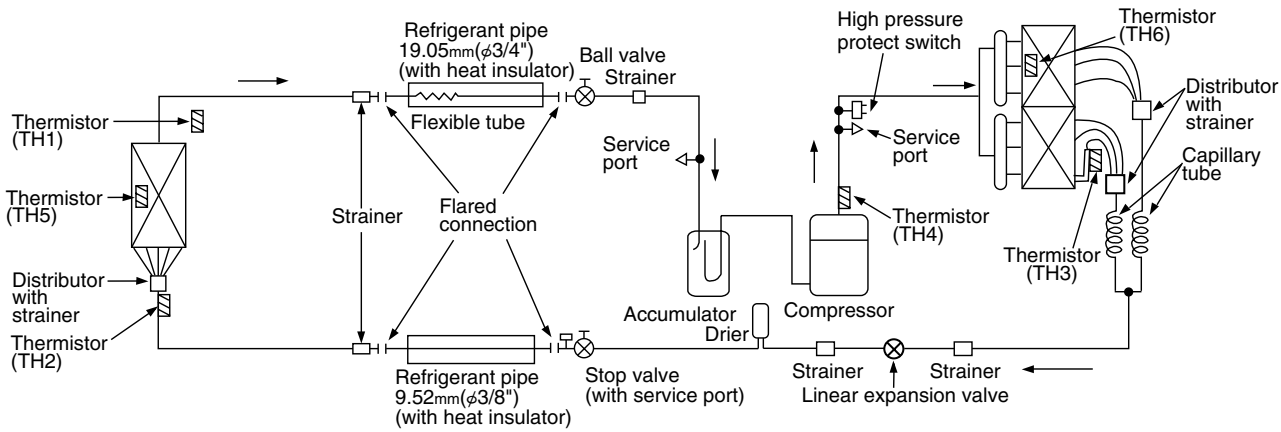

PCA-P5GA / PU-P5YGAA
PCA-P6GA / PU-P6YGAA

Unit: mm

INDOOR UNIT **OUTDOOR UNIT**

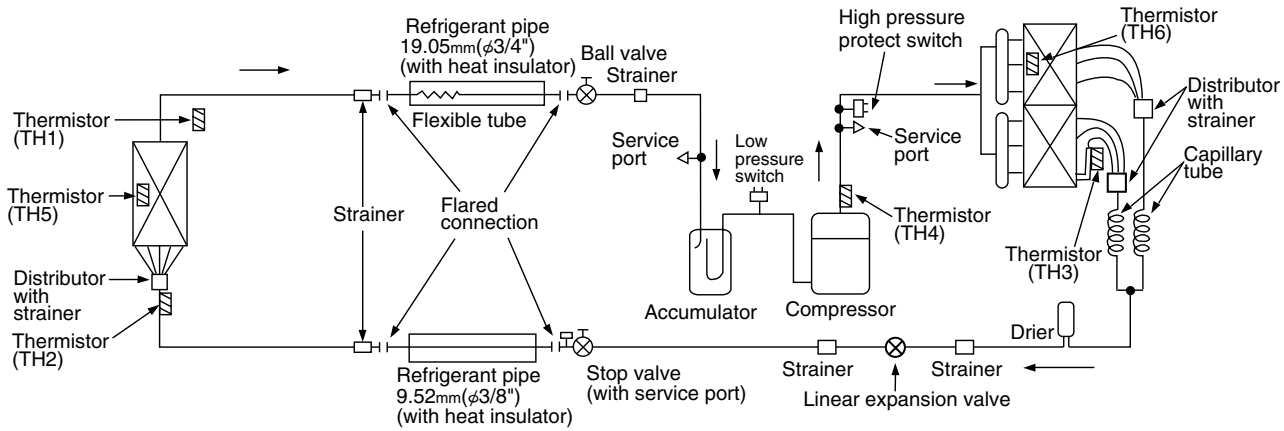

A.3.7 PERFORMANCE DATA

COOLING CAPACITY (240V)

PCA-P2GA, PCH-P2GAH

CAPACITY : 5,400 W INPUT : 2.40 kW SHF : 0.72

Indoor intake air DB (℃)	Indoor intake air WB (℃)	Outdoor intake air DB (℃)											
		20				25				30			
		CA	SHC	SHF	P.C.	CA	SHC	SHF	P.C.	CA	SHC	SHF	P.C.
20	16	5,346	3,315	0.62	1.92	5,184	3,214	0.62	2.03	5,022	3,114	0.62	2.15
20	18	5,724	2,862	0.50	1.96	5,562	2,781	0.50	2.06	5,373	2,687	0.50	2.21
20	20	6,156	2,339	0.38	2.02	6,021	2,288	0.38	2.11	5,859	2,226	0.38	2.26
22	16	5,346	3,742	0.70	1.92	5,184	3,629	0.70	2.03	5,022	3,515	0.70	2.15
22	18	5,724	3,320	0.58	1.96	5,562	3,226	0.58	2.06	5,373	3,116	0.58	2.21
22	20	6,156	2,832	0.46	2.02	6,021	2,770	0.46	2.11	5,859	2,695	0.46	2.26
24	16	5,346	4,170	0.78	1.92	5,184	4,044	0.78	2.03	5,022	3,917	0.78	2.15
24	18	5,724	3,778	0.66	1.96	5,562	3,671	0.66	2.06	5,373	3,546	0.66	2.21
24	20	6,156	3,324	0.54	2.02	6,021	3,251	0.54	2.11	5,859	3,164	0.54	2.26
26	16	5,346	4,598	0.86	1.92	5,184	4,458	0.86	2.03	5,022	4,319	0.86	2.15
26	18	5,724	4,236	0.74	1.96	5,562	4,116	0.74	2.06	5,373	3,976	0.74	2.21
26	20	6,156	3,817	0.62	2.02	6,021	3,733	0.62	2.11	5,859	3,633	0.62	2.26
28	16	5,346	5,025	0.94	1.92	5,184	4,873	0.94	2.03	5,022	4,721	0.94	2.15
28	18	5,724	4,694	0.82	1.96	5,562	4,561	0.82	2.06	5,373	4,406	0.82	2.21
28	20	6,156	4,309	0.70	2.02	6,021	4,215	0.70	2.11	5,859	4,101	0.70	2.26
30	16	5,346	5,346	1.00	1.92	5,184	5,184	1.00	2.03	5,022	5,022	1.00	2.15
30	18	5,724	5,152	0.90	1.96	5,562	5,006	0.90	2.06	5,373	4,836	0.90	2.21
30	20	6,156	4,802	0.78	2.02	6,021	4,696	0.78	2.11	5,859	4,570	0.78	2.26
32	16	5,346	5,346	1.00	1.92	5,184	5,184	1.00	2.03	5,022	5,022	1.00	2.15
32	18	5,724	5,610	0.98	1.96	5,562	5,451	0.98	2.06	5,373	5,266	0.98	2.21
32	20	6,156	5,294	0.86	2.02	6,021	5,178	0.86	2.11	5,859	5,039	0.86	2.26
34	16	5,346	5,346	1.00	1.92	5,184	5,184	1.00	2.03	5,022	5,022	1.00	2.15
34	18	5,724	5,724	1.00	1.96	5,562	5,562	1.00	2.06	5,373	5,373	1.00	2.21
34	20	6,156	5,787	0.94	2.02	6,021	5,660	0.94	2.11	5,859	5,507	0.94	2.26

NOTE: CA: Capacity (W) SHC: Sensible heat capacity (W)
P.C.: Power consumption (kW) SHF: Sensible heat factor

COOLING CAPACITY (240V)

PCA-P2GA, PCH-P2GAH

CAPACITY : 5,400 W INPUT : 2.40 kW SHF : 0.72

Indoor intake air DB (℃)	Indoor intake air WB (℃)	Outdoor intake air DB (℃)											
		35				40				45			
		CA	SHC	SHF	P.C.	CA	SHC	SHF	P.C.	CA	SHC	SHF	P.C.
20	16	4,806	2,980	0.62	2.30	4,590	2,846	0.62	2.47	4,374	2,712	0.62	2.68
20	18	5,184	2,592	0.50	2.36	5,022	2,511	0.50	2.54	4,698	2,349	0.50	2.74
20	20	5,616	2,134	0.38	2.42	5,400	2,052	0.38	2.59	5,076	1,929	0.38	2.78
22	16	4,806	3,364	0.70	2.30	4,590	3,213	0.70	2.47	4,374	3,062	0.70	2.68
22	18	5,184	3,007	0.58	2.36	5,022	2,913	0.58	2.54	4,698	2,725	0.58	2.74
22	20	5,616	2,583	0.46	2.42	5,400	2,484	0.46	2.59	5,076	2,335	0.46	2.78
24	16	4,806	3,749	0.78	2.30	4,590	3,580	0.78	2.47	4,374	3,412	0.78	2.68
24	18	5,184	3,421	0.66	2.36	5,022	3,315	0.66	2.54	4,698	3,101	0.66	2.74
24	20	5,616	3,033	0.54	2.42	5,400	2,916	0.54	2.59	5,076	2,741	0.54	2.78
26	16	4,806	4,133	0.86	2.30	4,590	3,947	0.86	2.47	4,374	3,762	0.86	2.68
26	18	5,184	3,836	0.74	2.36	5,022	3,716	0.74	2.54	4,698	3,477	0.74	2.74
26	20	5,616	3,482	0.62	2.42	5,400	3,348	0.62	2.59	5,076	3,147	0.62	2.78
28	16	4,806	4,518	0.94	2.30	4,590	4,315	0.94	2.47	4,374	4,112	0.94	2.68
28	18	5,184	4,251	0.82	2.36	5,022	4,118	0.82	2.54	4,698	3,852	0.82	2.74
28	20	5,616	3,931	0.70	2.42	5,400	3,780	0.70	2.59	5,076	3,553	0.70	2.78
30	16	4,806	4,806	1.00	2.30	4,590	4,590	1.00	2.47	4,374	4,374	1.00	2.68
30	18	5,184	4,666	0.90	2.36	5,022	4,520	0.90	2.54	4,698	4,228	0.90	2.74
30	20	5,616	4,380	0.78	2.42	5,400	4,212	0.78	2.59	5,076	3,959	0.78	2.78
32	16	4,806	4,806	1.00	2.30	4,590	4,590	1.00	2.47	4,374	4,374	1.00	2.68
32	18	5,184	5,080	0.98	2.36	5,022	4,922	0.98	2.54	4,698	4,604	0.98	2.74
32	20	5,616	4,830	0.86	2.42	5,400	4,644	0.86	2.59	5,076	4,365	0.86	2.78
34	16	4,806	4,806	1.00	2.30	4,590	4,590	1.00	2.47	4,374	4,374	1.00	2.68
34	18	5,184	5,184	1.00	2.36	5,022	5,022	1.00	2.54	4,698	4,698	1.00	2.74
34	20	5,616	5,279	0.94	2.42	5,400	5,076	0.94	2.59	5,076	4,771	0.94	2.78

NOTE: CA: Capacity (W) SHC: Sensible heat capacity (W)
P.C.: Power consumption (kW) SHF: Sensible heat factor

COOLING CAPACITY (240V)

PCA-P2.5GA, PCH-P2.5GAH

CAPACITY : 6,650 W INPUT : 2.65 kW SHF : 0.75

Indoor intake air DB (℃)	Indoor intake air WB (℃)	Outdoor intake air DB (℃)											
		20				25				30			
		CA	SHC	SHF	P.C.	CA	SHC	SHF	P.C.	CA	SHC	SHF	P.C.
20	16	6,584	4,279	0.65	2.12	6,384	4,150	0.65	2.24	6,185	4,020	0.65	2.37
20	18	7,049	3,736	0.53	2.16	6,850	3,630	0.53	2.28	6,617	3,507	0.53	2.44
20	20	7,581	3,108	0.41	2.23	7,415	3,040	0.41	2.33	7,215	2,958	0.41	2.49
22	16	6,584	4,806	0.73	2.12	6,384	4,660	0.73	2.24	6,185	4,515	0.73	2.37
22	18	7,049	4,300	0.61	2.16	6,850	4,178	0.61	2.28	6,617	4,036	0.61	2.44
22	20	7,581	3,715	0.49	2.23	7,415	3,633	0.49	2.33	7,215	3,535	0.49	2.49
24	16	6,584	5,333	0.81	2.12	6,384	5,171	0.81	2.24	6,185	5,009	0.81	2.37
24	18	7,049	4,864	0.69	2.16	6,850	4,726	0.69	2.28	6,617	4,566	0.69	2.44
24	20	7,581	4,321	0.57	2.23	7,415	4,226	0.57	2.33	7,215	4,113	0.57	2.49
26	16	6,584	5,859	0.89	2.12	6,384	5,682	0.89	2.24	6,185	5,504	0.89	2.37
26	18	7,049	5,428	0.77	2.16	6,850	5,274	0.77	2.28	6,617	5,095	0.77	2.44
26	20	7,581	4,928	0.65	2.23	7,415	4,820	0.65	2.33	7,215	4,690	0.65	2.49
28	16	6,584	6,386	0.97	2.12	6,384	6,192	0.97	2.24	6,185	5,999	0.97	2.37
28	18	7,049	5,992	0.85	2.16	6,850	5,822	0.85	2.28	6,617	5,624	0.85	2.44
28	20	7,581	5,534	0.73	2.23	7,415	5,413	0.73	2.33	7,215	5,267	0.73	2.49
30	16	6,584	6,584	1.00	2.12	6,384	6,384	1.00	2.24	6,185	6,185	1.00	2.37
30	18	7,049	6,556	0.93	2.16	6,850	6,370	0.93	2.28	6,617	6,154	0.93	2.44
30	20	7,581	6,141	0.81	2.23	7,415	6,006	0.81	2.33	7,215	5,844	0.81	2.49
32	16	6,584	6,584	1.00	2.12	6,384	6,384	1.00	2.24	6,185	6,185	1.00	2.37
32	18	7,049	7,049	1.00	2.16	6,850	6,850	1.00	2.28	6,617	6,617	1.00	2.44
32	20	7,581	6,747	0.89	2.23	7,415	6,599	0.89	2.33	7,215	6,422	0.89	2.49
34	16	6,584	6,584	1.00	2.12	6,384	6,384	1.00	2.24	6,185	6,185	1.00	2.37
34	18	7,049	7,049	1.00	2.16	6,850	6,850	1.00	2.28	6,617	6,617	1.00	2.44
34	20	7,581	7,354	0.97	2.23	7,415	7,192	0.97	2.33	7,215	6,999	0.97	2.49

NOTE: CA: Capacity (W) SHC: Sensible heat capacity (W)
P.C.: Power consumption (kW) SHF: Sensible heat factor

COOLING CAPACITY (240V)

PCA-P2.5GA, PCH-P2.5GAH

CAPACITY : 6,650 W INPUT : 2.65 kW SHF : 0.75

Indoor intake air DB (℃)	Indoor intake air WB (℃)	Outdoor intake air DB (℃)											
		35				40				45			
		CA	SHC	SHF	P.C.	CA	SHC	SHF	P.C.	CA	SHC	SHF	P.C.
20	16	5,919	3,847	0.65	2.54	5,653	3,674	0.65	2.73	5,387	3,501	0.65	2.95
20	18	6,384	3,384	0.53	2.61	6,185	3,278	0.53	2.81	5,786	3,066	0.53	3.02
20	20	6,916	2,836	0.41	2.68	6,650	2,727	0.41	2.86	6,251	2,563	0.41	3.07
22	16	5,919	4,321	0.73	2.54	5,653	4,126	0.73	2.73	5,387	3,932	0.73	2.95
22	18	6,384	3,894	0.61	2.61	6,185	3,773	0.61	2.81	5,786	3,529	0.61	3.02
22	20	6,916	3,389	0.49	2.68	6,650	3,259	0.49	2.86	6,251	3,063	0.49	3.07
24	16	5,919	4,794	0.81	2.54	5,653	4,579	0.81	2.73	5,387	4,363	0.81	2.95
24	18	6,384	4,405	0.69	2.61	6,185	4,267	0.69	2.81	5,786	3,992	0.69	3.02
24	20	6,916	3,942	0.57	2.68	6,650	3,791	0.57	2.86	6,251	3,563	0.57	3.07
26	16	5,919	5,267	0.89	2.54	5,653	5,031	0.89	2.73	5,387	4,794	0.89	2.95
26	18	6,384	4,916	0.77	2.61	6,185	4,762	0.77	2.81	5,786	4,455	0.77	3.02
26	20	6,916	4,495	0.65	2.68	6,650	4,323	0.65	2.86	6,251	4,063	0.65	3.07
28	16	5,919	5,741	0.97	2.54	5,653	5,483	0.97	2.73	5,387	5,225	0.97	2.95
28	18	6,384	5,426	0.85	2.61	6,185	5,257	0.85	2.81	5,786	4,918	0.85	3.02
28	20	6,916	5,049	0.73	2.68	6,650	4,855	0.73	2.86	6,251	4,563	0.73	3.07
30	16	5,919	5,919	1.00	2.54	5,653	5,653	1.00	2.73	5,387	5,387	1.00	2.95
30	18	6,384	5,937	0.93	2.61	6,185	5,752	0.93	2.81	5,786	5,381	0.93	3.02
30	20	6,916	5,602	0.81	2.68	6,650	5,387	0.81	2.86	6,251	5,063	0.81	3.07
32	16	5,919	5,919	1.00	2.54	5,653	5,653	1.00	2.73	5,387	5,387	1.00	2.95
32	18	6,384	6,384	1.00	2.61	6,185	6,185	1.00	2.81	5,786	5,786	1.00	3.02
32	20	6,916	6,155	0.89	2.68	6,650	5,919	0.89	2.86	6,251	5,563	0.89	3.07
34	16	5,919	5,919	1.00	2.54	5,653	5,653	1.00	2.73	5,387	5,387	1.00	2.95
34	18	6,384	6,384	1.00	2.61	6,185	6,185	1.00	2.81	5,786	5,786	1.00	3.02
34	20	6,916	6,709	0.97	2.68	6,650	6,451	0.97	2.86	6,251	6,063	0.97	3.07

NOTE: CA: Capacity (W) SHC: Sensible heat capacity (W)
P.C.: Power consumption (kW) SHF: Sensible heat factor

COOLING CAPACITY (240V)

PCA-P3GA, PCH-P3GAH

CAPACITY : 7,500 W INPUT : 3.40 kW SHF : 0.73

Indoor intake air DB (℃)	Indoor intake air WB (℃)	Outdoor intake air DB (℃)											
		20				25				30			
		CA	SHC	SHF	P.C.	CA	SHC	SHF	P.C.	CA	SHC	SHF	P.C.
20	16	7,425	4,678	0.63	2.72	7,200	4,536	0.63	2.87	6,975	4,394	0.63	3.04
20	18	7,950	4,055	0.51	2.77	7,725	3,940	0.51	2.92	7,463	3,806	0.51	3.13
20	20	8,550	3,335	0.39	2.86	8,363	3,261	0.39	2.99	8,138	3,174	0.39	3.20
22	16	7,425	5,272	0.71	2.72	7,200	5,112	0.71	2.87	6,975	4,952	0.71	3.04
22	18	7,950	4,691	0.59	2.77	7,725	4,558	0.59	2.92	7,463	4,403	0.59	3.13
22	20	8,550	4,019	0.47	2.86	8,363	3,930	0.47	2.99	8,138	3,825	0.47	3.20
24	16	7,425	5,866	0.79	2.72	7,200	5,688	0.79	2.87	6,975	5,510	0.79	3.04
24	18	7,950	5,327	0.67	2.77	7,725	5,176	0.67	2.92	7,463	5,000	0.67	3.13
24	20	8,550	4,703	0.55	2.86	8,363	4,599	0.55	2.99	8,138	4,476	0.55	3.20
26	16	7,425	6,460	0.87	2.72	7,200	6,264	0.87	2.87	6,975	6,068	0.87	3.04
26	18	7,950	5,963	0.75	2.77	7,725	5,794	0.75	2.92	7,463	5,597	0.75	3.13
26	20	8,550	5,387	0.63	2.86	8,363	5,268	0.63	2.99	8,138	5,127	0.63	3.20
28	16	7,425	7,054	0.95	2.72	7,200	6,840	0.95	2.87	6,975	6,626	0.95	3.04
28	18	7,950	6,599	0.83	2.77	7,725	6,412	0.83	2.92	7,463	6,194	0.83	3.13
28	20	8,550	6,071	0.71	2.86	8,363	5,937	0.71	2.99	8,138	5,778	0.71	3.20
30	16	7,425	7,425	1.00	2.72	7,200	7,200	1.00	2.87	6,975	6,975	1.00	3.04
30	18	7,950	7,235	0.91	2.77	7,725	7,030	0.91	2.92	7,463	6,791	0.91	3.13
30	20	8,550	6,755	0.79	2.86	8,363	6,606	0.79	2.99	8,138	6,429	0.79	3.20
32	16	7,425	7,425	1.00	2.72	7,200	7,200	1.00	2.87	6,975	6,975	1.00	3.04
32	18	7,950	7,871	0.99	2.77	7,725	7,648	0.99	2.92	7,463	7,388	0.99	3.13
32	20	8,550	7,439	0.87	2.86	8,363	7,275	0.87	2.99	8,138	7,080	0.87	3.20
34	16	7,425	7,425	1.00	2.72	7,200	7,200	1.00	2.87	6,975	6,975	1.00	3.04
34	18	7,950	7,950	1.00	2.77	7,725	7,725	1.00	2.92	7,463	7,463	1.00	3.13
34	20	8,550	8,123	0.95	2.86	8,363	7,944	0.95	2.99	8,138	7,731	0.95	3.20

NOTE: CA: Capacity (W) SHC: Sensible heat capacity (W)
P.C.: Power consumption (kW) SHF: Sensible heat factor

COOLING CAPACITY (240V)

PCA-P3GA, PCH-P3GAH

CAPACITY : 7,500 W INPUT : 3.40 kW SHF : 0.73

Indoor intake air DB (℃)	Indoor intake air WB (℃)	Outdoor intake air DB (℃)											
		35				40				45			
		CA	SHC	SHF	P.C.	CA	SHC	SHF	P.C.	CA	SHC	SHF	P.C.
20	16	6,675	4,205	0.63	3.26	6,375	4,016	0.63	3.50	6,075	3,827	0.63	3.79
20	18	7,200	3,672	0.51	3.35	6,975	3,557	0.51	3.60	6,525	3,328	0.51	3.88
20	20	7,800	3,042	0.39	3.43	7,500	2,925	0.39	3.67	7,050	2,750	0.39	3.94
22	16	6,675	4,739	0.71	3.26	6,375	4,526	0.71	3.50	6,075	4,313	0.71	3.79
22	18	7,200	4,248	0.59	3.35	6,975	4,115	0.59	3.60	6,525	3,850	0.59	3.88
22	20	7,800	3,666	0.47	3.43	7,500	3,525	0.47	3.67	7,050	3,314	0.47	3.94
24	16	6,675	5,273	0.79	3.26	6,375	5,036	0.79	3.50	6,075	4,799	0.79	3.79
24	18	7,200	4,824	0.67	3.35	6,975	4,673	0.67	3.60	6,525	4,372	0.67	3.88
24	20	7,800	4,290	0.55	3.43	7,500	4,125	0.55	3.67	7,050	3,878	0.55	3.94
26	16	6,675	5,807	0.87	3.26	6,375	5,546	0.87	3.50	6,075	5,285	0.87	3.79
26	18	7,200	5,400	0.75	3.35	6,975	5,231	0.75	3.60	6,525	4,894	0.75	3.88
26	20	7,800	4,914	0.63	3.43	7,500	4,725	0.63	3.67	7,050	4,442	0.63	3.94
28	16	6,675	6,341	0.95	3.26	6,375	6,056	0.95	3.50	6,075	5,771	0.95	3.79
28	18	7,200	5,976	0.83	3.35	6,975	5,789	0.83	3.60	6,525	5,416	0.83	3.88
28	20	7,800	5,538	0.71	3.43	7,500	5,325	0.71	3.67	7,050	5,006	0.71	3.94
30	16	6,675	6,675	1.00	3.26	6,375	6,375	1.00	3.50	6,075	6,075	1.00	3.79
30	18	7,200	6,552	0.91	3.35	6,975	6,347	0.91	3.60	6,525	5,938	0.91	3.88
30	20	7,800	6,162	0.79	3.43	7,500	5,925	0.79	3.67	7,050	5,570	0.79	3.94
32	16	6,675	6,675	1.00	3.26	6,375	6,375	1.00	3.50	6,075	6,075	1.00	3.79
32	18	7,200	7,128	0.99	3.35	6,975	6,905	0.99	3.60	6,525	6,460	0.99	3.88
32	20	7,800	6,786	0.87	3.43	7,500	6,525	0.87	3.67	7,050	6,134	0.87	3.94
34	16	6,675	6,675	1.00	3.26	6,375	6,375	1.00	3.50	6,075	6,075	1.00	3.79
34	18	7,200	7,200	1.00	3.35	6,975	6,975	1.00	3.60	6,525	6,525	1.00	3.88
34	20	7,800	7,410	0.95	3.43	7,500	7,125	0.95	3.67	7,050	6,698	0.95	3.94

NOTE: CA: Capacity (W) SHC: Sensible heat capacity (W)
P.C.: Power consumption (kW) SHF: Sensible heat factor

COOLING CAPACITY (240V)

PCA-P4GA, PCH-P4GAH

CAPACITY : 9,700 W INPUT : 3.64 kW SHF : 0.76

Indoor intake air DB (℃)	Indoor intake air WB (℃)	Outdoor intake air DB (℃)											
		20				25				30			
		CA	SHC	SHF	P.C.	CA	SHC	SHF	P.C.	CA	SHC	SHF	P.C.
20	16	9,603	6,338	0.66	2.91	9,312	6,146	0.66	3.08	9,021	5,954	0.66	3.26
20	18	10,282	5,552	0.54	2.97	9,991	5,395	0.54	3.13	9,652	5,212	0.54	3.35
20	20	11,058	4,644	0.42	3.06	10,816	4,543	0.42	3.20	10,525	4,420	0.42	3.42
22	16	9,603	7,106	0.74	2.91	9,312	6,891	0.74	3.08	9,021	6,676	0.74	3.26
22	18	10,282	6,375	0.62	2.97	9,991	6,194	0.62	3.13	9,652	5,984	0.62	3.35
22	20	11,058	5,529	0.50	3.06	10,816	5,408	0.50	3.20	10,525	5,262	0.50	3.42
24	16	9,603	7,874	0.82	2.91	9,312	7,636	0.82	3.08	9,021	7,397	0.82	3.26
24	18	10,282	7,197	0.70	2.97	9,991	6,994	0.70	3.13	9,652	6,756	0.70	3.35
24	20	11,058	6,414	0.58	3.06	10,816	6,273	0.58	3.20	10,525	6,104	0.58	3.42
26	16	9,603	8,643	0.90	2.91	9,312	8,381	0.90	3.08	9,021	8,119	0.90	3.26
26	18	10,282	8,020	0.78	2.97	9,991	7,793	0.78	3.13	9,652	7,528	0.78	3.35
26	20	11,058	7,298	0.66	3.06	10,816	7,138	0.66	3.20	10,525	6,946	0.66	3.42
28	16	9,603	9,411	0.98	2.91	9,312	9,126	0.98	3.08	9,021	8,841	0.98	3.26
28	18	10,282	8,843	0.86	2.97	9,991	8,592	0.86	3.13	9,652	8,300	0.86	3.35
28	20	11,058	8,183	0.74	3.06	10,816	8,003	0.74	3.20	10,525	7,788	0.74	3.42
30	16	9,603	9,603	1.00	2.91	9,312	9,312	1.00	3.08	9,021	9,021	1.00	3.26
30	18	10,282	9,665	0.94	2.97	9,991	9,392	0.94	3.13	9,652	9,072	0.94	3.35
30	20	11,058	9,068	0.82	3.06	10,816	8,869	0.82	3.20	10,525	8,630	0.82	3.42
32	16	9,603	9,603	1.00	2.91	9,312	9,312	1.00	3.08	9,021	9,021	1.00	3.26
32	18	10,282	10,282	1.00	2.97	9,991	9,991	1.00	3.13	9,652	9,652	1.00	3.35
32	20	11,058	9,952	0.90	3.06	10,816	9,734	0.90	3.20	10,525	9,472	0.90	3.42
34	16	9,603	9,603	1.00	2.91	9,312	9,312	1.00	3.08	9,021	9,021	1.00	3.26
34	18	10,282	10,282	1.00	2.97	9,991	9,991	1.00	3.13	9,652	9,652	1.00	3.35
34	20	11,058	10,837	0.98	3.06	10,816	10,599	0.98	3.20	10,525	10,314	0.98	3.42

NOTE: CA: Capacity (W) SHC: Sensible heat capacity (W)
P.C.: Power consumption (kW) SHF: Sensible heat factor

COOLING CAPACITY (240V)

PCA-P4GA, PCH-P4GAH

CAPACITY : 9,700 W INPUT : 3.64 kW SHF : 0.76

Indoor intake air DB (℃)	Indoor intake air WB (℃)	Outdoor intake air DB (℃)											
		35				40				45			
		CA	SHC	SHF	P.C.	CA	SHC	SHF	P.C.	CA	SHC	SHF	P.C.
20	16	8,633	5,698	0.66	3.49	8,245	5,442	0.66	3.75	7,857	5,186	0.66	4.06
20	18	9,312	5,028	0.54	3.59	9,021	4,871	0.54	3.86	8,439	4,557	0.54	4.15
20	20	10,088	4,237	0.42	3.68	9,700	4,074	0.42	3.93	9,118	3,830	0.42	4.22
22	16	8,633	6,388	0.74	3.49	8,245	6,101	0.74	3.75	7,857	5,814	0.74	4.06
22	18	9,312	5,773	0.62	3.59	9,021	5,593	0.62	3.86	8,439	5,232	0.62	4.15
22	20	10,088	5,044	0.50	3.68	9,700	4,850	0.50	3.93	9,118	4,559	0.50	4.22
24	16	8,633	7,079	0.82	3.49	8,245	6,761	0.82	3.75	7,857	6,443	0.82	4.06
24	18	9,312	6,518	0.70	3.59	9,021	6,315	0.70	3.86	8,439	5,907	0.70	4.15
24	20	10,088	5,851	0.58	3.68	9,700	5,626	0.58	3.93	9,118	5,288	0.58	4.22
26	16	8,633	7,770	0.90	3.49	8,245	7,421	0.90	3.75	7,857	7,071	0.90	4.06
26	18	9,312	7,263	0.78	3.59	9,021	7,036	0.78	3.86	8,439	6,582	0.78	4.15
26	20	10,088	6,658	0.66	3.68	9,700	6,402	0.66	3.93	9,118	6,018	0.66	4.22
28	16	8,633	8,460	0.98	3.49	8,245	8,080	0.98	3.75	7,857	7,700	0.98	4.06
28	18	9,312	8,008	0.86	3.59	9,021	7,758	0.86	3.86	8,439	7,258	0.86	4.15
28	20	10,088	7,465	0.74	3.68	9,700	7,178	0.74	3.93	9,118	6,747	0.74	4.22
30	16	8,633	8,633	1.00	3.49	8,245	8,245	1.00	3.75	7,857	7,857	1.00	4.06
30	18	9,312	8,753	0.94	3.59	9,021	8,480	0.94	3.86	8,439	7,933	0.94	4.15
30	20	10,088	8,272	0.82	3.68	9,700	7,954	0.82	3.93	9,118	7,477	0.82	4.22
32	16	8,633	8,633	1.00	3.49	8,245	8,245	1.00	3.75	7,857	7,857	1.00	4.06
32	18	9,312	9,312	1.00	3.59	9,021	9,021	1.00	3.86	8,439	8,439	1.00	4.15
32	20	10,088	9,079	0.90	3.68	9,700	8,730	0.90	3.93	9,118	8,206	0.90	4.22
34	16	8,633	8,633	1.00	3.49	8,245	8,245	1.00	3.75	7,857	7,857	1.00	4.06
34	18	9,312	9,312	1.00	3.59	9,021	9,021	1.00	3.86	8,439	8,439	1.00	4.15
34	20	10,088	9,886	0.98	3.68	9,700	9,506	0.98	3.93	9,118	8,936	0.98	4.22

NOTE: CA: Capacity (W) SHC: Sensible heat capacity (W)
P.C.: Power consumption (kW) SHF: Sensible heat factor

COOLING CAPACITY (240V)

PCA-P5GA, PCH-P5GAH

CAPACITY : 12,400 W INPUT : 4.94 kW SHF : 0.77

Indoor intake air DB (℃)	Indoor intake air WB (℃)	Outdoor intake air DB (℃)											
		20				25				30			
		CA	SHC	SHF	P.C.	CA	SHC	SHF	P.C.	CA	SHC	SHF	P.C.
20	16	12,276	8,225	0.67	3.95	11,904	7,976	0.67	4.17	11,532	7,726	0.67	4.42
20	18	13,144	7,229	0.55	4.03	12,772	7,025	0.55	4.25	12,338	6,786	0.55	4.54
20	20	14,136	6,078	0.43	4.15	13,826	5,945	0.43	4.35	13,454	5,785	0.43	4.64
22	16	12,276	9,207	0.75	3.95	11,904	8,928	0.75	4.17	11,532	8,649	0.75	4.42
22	18	13,144	8,281	0.63	4.03	12,772	8,046	0.63	4.25	12,338	7,773	0.63	4.54
22	20	14,136	7,209	0.51	4.15	13,826	7,051	0.51	4.35	13,454	6,862	0.51	4.64
24	16	12,276	10,189	0.83	3.95	11,904	9,880	0.83	4.17	11,532	9,572	0.83	4.42
24	18	13,144	9,332	0.71	4.03	12,772	9,068	0.71	4.25	12,338	8,760	0.71	4.54
24	20	14,136	8,340	0.59	4.15	13,826	8,157	0.59	4.35	13,454	7,938	0.59	4.64
26	16	12,276	11,171	0.91	3.95	11,904	10,833	0.91	4.17	11,532	10,494	0.91	4.42
26	18	13,144	10,384	0.79	4.03	12,772	10,090	0.79	4.25	12,338	9,747	0.79	4.54
26	20	14,136	9,471	0.67	4.15	13,826	9,263	0.67	4.35	13,454	9,014	0.67	4.64
28	16	12,276	12,153	0.99	3.95	11,904	11,785	0.99	4.17	11,532	11,417	0.99	4.42
28	18	13,144	11,435	0.87	4.03	12,772	11,112	0.87	4.25	12,338	10,734	0.87	4.54
28	20	14,136	10,602	0.75	4.15	13,826	10,370	0.75	4.35	13,454	10,091	0.75	4.64
30	16	12,276	12,276	1.00	3.95	11,904	11,904	1.00	4.17	11,532	11,532	1.00	4.42
30	18	13,144	12,487	0.95	4.03	12,772	12,133	0.95	4.25	12,338	11,721	0.95	4.54
30	20	14,136	11,733	0.83	4.15	13,826	11,476	0.83	4.35	13,454	11,167	0.83	4.64
32	16	12,276	12,276	1.00	3.95	11,904	11,904	1.00	4.17	11,532	11,532	1.00	4.42
32	18	13,144	13,144	1.00	4.03	12,772	12,772	1.00	4.25	12,338	12,338	1.00	4.54
32	20	14,136	12,864	0.91	4.15	13,826	12,582	0.91	4.35	13,454	12,243	0.91	4.64
34	16	12,276	12,276	1.00	3.95	11,904	11,904	1.00	4.17	11,532	11,532	1.00	4.42
34	18	13,144	13,144	1.00	4.03	12,772	12,772	1.00	4.25	12,338	12,338	1.00	4.54
34	20	14,136	13,995	0.99	4.15	13,826	13,688	0.99	4.35	13,454	13,319	0.99	4.64

NOTE: CA: Capacity (W) SHC: Sensible heat capacity (W)
P.C.: Power consumption (kW) SHF: Sensible heat factor

COOLING CAPACITY (240V)

PCA-P5GA, PCH-P5GAH

CAPACITY : 12,400 W INPUT : 4.94 kW SHF : 0.77

Indoor intake air DB (℃)	Indoor intake air WB (℃)	Outdoor intake air DB (℃)											
		35				40				45			
		CA	SHC	SHF	P.C.	CA	SHC	SHF	P.C.	CA	SHC	SHF	P.C.
20	16	11,036	7,394	0.67	4.74	10,540	7,062	0.67	5.09	10,044	6,729	0.67	5.51
20	18	11,904	6,547	0.55	4.87	11,532	6,343	0.55	5.24	10,788	5,933	0.55	5.63
20	20	12,896	5,545	0.43	4.99	12,400	5,332	0.43	5.34	11,656	5,012	0.43	5.73
22	16	11,036	8,277	0.75	4.74	10,540	7,905	0.75	5.09	10,044	7,533	0.75	5.51
22	18	11,904	7,500	0.63	4.87	11,532	7,265	0.63	5.24	10,788	6,796	0.63	5.63
22	20	12,896	6,577	0.51	4.99	12,400	6,324	0.51	5.34	11,656	5,945	0.51	5.73
24	16	11,036	9,160	0.83	4.74	10,540	8,748	0.83	5.09	10,044	8,337	0.83	5.51
24	18	11,904	8,452	0.71	4.87	11,532	8,188	0.71	5.24	10,788	7,659	0.71	5.63
24	20	12,896	7,609	0.59	4.99	12,400	7,316	0.59	5.34	11,656	6,877	0.59	5.73
26	16	11,036	10,043	0.91	4.74	10,540	9,591	0.91	5.09	10,044	9,140	0.91	5.51
26	18	11,904	9,404	0.79	4.87	11,532	9,110	0.79	5.24	10,788	8,523	0.79	5.63
26	20	12,896	8,640	0.67	4.99	12,400	8,308	0.67	5.34	11,656	7,810	0.67	5.73
28	16	11,036	10,926	0.99	4.74	10,540	10,435	0.99	5.09	10,044	9,944	0.99	5.51
28	18	11,904	10,356	0.87	4.87	11,532	10,033	0.87	5.24	10,788	9,386	0.87	5.63
28	20	12,896	9,672	0.75	4.99	12,400	9,300	0.75	5.34	11,656	8,742	0.75	5.73
30	16	11,036	11,036	1.00	4.74	10,540	10,540	1.00	5.09	10,044	10,044	1.00	5.51
30	18	11,904	11,309	0.95	4.87	11,532	10,955	0.95	5.24	10,788	10,249	0.95	5.63
30	20	12,896	10,704	0.83	4.99	12,400	10,292	0.83	5.34	11,656	9,674	0.83	5.73
32	16	11,036	11,036	1.00	4.74	10,540	10,540	1.00	5.09	10,044	10,044	1.00	5.51
32	18	11,904	11,904	1.00	4.87	11,532	11,532	1.00	5.24	10,788	10,788	1.00	5.63
32	20	12,896	11,735	0.91	4.99	12,400	11,284	0.91	5.34	11,656	10,607	0.91	5.73
34	16	11,036	11,036	1.00	4.74	10,540	10,540	1.00	5.09	10,044	10,044	1.00	5.51
34	18	11,904	11,904	1.00	4.87	11,532	11,532	1.00	5.24	10,788	10,788	1.00	5.63
34	20	12,896	12,767	0.99	4.99	12,400	12,276	0.99	5.34	11,656	11,539	0.99	5.73

NOTE: CA: Capacity (W) SHC: Sensible heat capacity (W)
P.C.: Power consumption (kW) SHF: Sensible heat factor

COOLING CAPACITY (240V)

PCA-P6GA, PCH-P6GAH

CAPACITY : 14,300 W INPUT : 5.94 kW SHF : 0.74

Indoor intake air DB (℃)	Indoor intake air WB (℃)	Outdoor intake air DB (℃)											
		20				25				30			
		CA	SHC	SHF	P.C.	CA	SHC	SHF	P.C.	CA	SHC	SHF	P.C.
20	16	14,157	9,060	0.64	4.75	13,728	8,786	0.64	5.02	13,299	8,511	0.64	5.32
20	18	15,158	7,882	0.52	4.84	14,729	7,659	0.52	5.11	14,229	7,399	0.52	5.46
20	20	16,302	6,521	0.40	4.99	15,945	6,378	0.40	5.23	15,516	6,206	0.40	5.58
22	16	14,157	10,193	0.72	4.75	13,728	9,884	0.72	5.02	13,299	9,575	0.72	5.32
22	18	15,158	9,095	0.60	4.84	14,729	8,837	0.60	5.11	14,229	8,537	0.60	5.46
22	20	16,302	7,825	0.48	4.99	15,945	7,653	0.48	5.23	15,516	7,447	0.48	5.58
24	16	14,157	11,326	0.80	4.75	13,728	10,982	0.80	5.02	13,299	10,639	0.80	5.32
24	18	15,158	10,307	0.68	4.84	14,729	10,016	0.68	5.11	14,229	9,675	0.68	5.46
24	20	16,302	9,129	0.56	4.99	15,945	8,929	0.56	5.23	15,516	8,689	0.56	5.58
26	16	14,157	12,458	0.88	4.75	13,728	12,081	0.88	5.02	13,299	11,703	0.88	5.32
26	18	15,158	11,520	0.76	4.84	14,729	11,194	0.76	5.11	14,229	10,814	0.76	5.46
26	20	16,302	10,433	0.64	4.99	15,945	10,204	0.64	5.23	15,516	9,930	0.64	5.58
28	16	14,157	13,591	0.96	4.75	13,728	13,179	0.96	5.02	13,299	12,767	0.96	5.32
28	18	15,158	12,733	0.84	4.84	14,729	12,372	0.84	5.11	14,229	11,952	0.84	5.46
28	20	16,302	11,737	0.72	4.99	15,945	11,480	0.72	5.23	15,516	11,171	0.72	5.58
30	16	14,157	14,157	1.00	4.75	13,728	13,728	1.00	5.02	13,299	13,299	1.00	5.32
30	18	15,158	13,945	0.92	4.84	14,729	13,551	0.92	5.11	14,229	13,090	0.92	5.46
30	20	16,302	13,042	0.80	4.99	15,945	12,756	0.80	5.23	15,516	12,412	0.80	5.58
32	16	14,157	14,157	1.00	4.75	13,728	13,728	1.00	5.02	13,299	13,299	1.00	5.32
32	18	15,158	15,158	1.00	4.84	14,729	14,729	1.00	5.11	14,229	14,229	1.00	5.46
32	20	16,302	14,346	0.88	4.99	15,945	14,031	0.88	5.23	15,516	13,654	0.88	5.58
34	16	14,157	14,157	1.00	4.75	13,728	13,728	1.00	5.02	13,299	13,299	1.00	5.32
34	18	15,158	15,158	1.00	4.84	14,729	14,729	1.00	5.11	14,229	14,229	1.00	5.46
34	20	16,302	15,650	0.96	4.99	15,945	15,307	0.96	5.23	15,516	14,895	0.96	5.58

NOTE: CA: Capacity (W) SHC: Sensible heat capacity (W)
P.C.: Power consumption (kW) SHF: Sensible heat factor

COOLING CAPACITY (240V)

PCA-P6GA, PCH-P6GAH

CAPACITY : 14,300 W INPUT : 5.94 kW SHF : 0.74

Indoor intake air DB (℃)	Indoor intake air WB (℃)	Outdoor intake air DB (℃)											
		35				40				45			
		CA	SHC	SHF	P.C.	CA	SHC	SHF	P.C.	CA	SHC	SHF	P.C.
20	16	12,727	8,145	0.64	5.70	12,155	7,779	0.64	6.12	11,583	7,413	0.64	6.62
20	18	13,728	7,139	0.52	5.85	13,299	6,915	0.52	6.30	12,441	6,469	0.52	6.77
20	20	14,872	5,949	0.40	6.00	14,300	5,720	0.40	6.42	13,442	5,377	0.40	6.89
22	16	12,727	9,163	0.72	5.70	12,155	8,752	0.72	6.12	11,583	8,340	0.72	6.62
22	18	13,728	8,237	0.60	5.85	13,299	7,979	0.60	6.30	12,441	7,465	0.60	6.77
22	20	14,872	7,139	0.48	6.00	14,300	6,864	0.48	6.42	13,442	6,452	0.48	6.89
24	16	12,727	10,182	0.80	5.70	12,155	9,724	0.80	6.12	11,583	9,266	0.80	6.62
24	18	13,728	9,335	0.68	5.85	13,299	9,043	0.68	6.30	12,441	8,460	0.68	6.77
24	20	14,872	8,328	0.56	6.00	14,300	8,008	0.56	6.42	13,442	7,528	0.56	6.89
26	16	12,727	11,200	0.88	5.70	12,155	10,696	0.88	6.12	11,583	10,193	0.88	6.62
26	18	13,728	10,433	0.76	5.85	13,299	10,107	0.76	6.30	12,441	9,455	0.76	6.77
26	20	14,872	9,518	0.64	6.00	14,300	9,152	0.64	6.42	13,442	8,603	0.64	6.89
28	16	12,727	12,218	0.96	5.70	12,155	11,669	0.96	6.12	11,583	11,120	0.96	6.62
28	18	13,728	11,532	0.84	5.85	13,299	11,171	0.84	6.30	12,441	10,450	0.84	6.77
28	20	14,872	10,708	0.72	6.00	14,300	10,296	0.72	6.42	13,442	9,678	0.72	6.89
30	16	12,727	12,727	1.00	5.70	12,155	12,155	1.00	6.12	11,583	11,583	1.00	6.62
30	18	13,728	12,630	0.92	5.85	13,299	12,235	0.92	6.30	12,441	11,446	0.92	6.77
30	20	14,872	11,898	0.80	6.00	14,300	11,440	0.80	6.42	13,442	10,754	0.80	6.89
32	16	12,727	12,727	1.00	5.70	12,155	12,155	1.00	6.12	11,583	11,583	1.00	6.62
32	18	13,728	13,728	1.00	5.85	13,299	13,299	1.00	6.30	12,441	12,441	1.00	6.77
32	20	14,872	13,087	0.88	6.00	14,300	12,584	0.88	6.42	13,442	11,829	0.88	6.89
34	16	12,727	12,727	1.00	5.70	12,155	12,155	1.00	6.12	11,583	11,583	1.00	6.62
34	18	13,728	13,728	1.00	5.85	13,299	13,299	1.00	6.30	12,441	12,441	1.00	6.77
34	20	14,872	14,277	0.96	6.00	14,300	13,728	0.96	6.42	13,442	12,904	0.96	6.89

NOTE: CA: Capacity (W) SHC: Sensible heat capacity (W)
P.C.: Power consumption (kW) SHF: Sensible heat factor

HEATING CAPACITY (240V)

Model	Indoor intake air DB (℃)	Outdoor intake air WB (℃)					
		-10		-5		0	
		CA	P.C.	CA	P.C.	CA	P.C.
PCA-P2GA PCH-P2GAH	15	3,969	1.42	4,313	1.56	4,813	1.80
	20	3,813	1.54	4,125	1.68	4,563	1.94
	25	3,688	1.63	4,000	1.82	4,375	2.11
PCA-P2.5GA PCH-P2.5GAH	15	4,223	1.56	4,589	1.72	5,121	1.99
	20	4,057	1.70	4,389	1.86	4,855	2.15
	25	3,924	1.80	4,256	2.01	4,655	2.33
PCA-P3GA PCH-P3GAH	15	5,842	2.07	6,348	2.28	7,084	2.63
	20	5,612	2.24	6,072	2.45	6,716	2.84
	25	5,428	2.38	5,888	2.66	6,440	3.08
PCA-P4GA PCH-P4GAH	15	6,763	2.26	7,349	2.49	8,201	2.87
	20	6,497	2.45	7,029	2.68	7,775	3.10
	25	6,284	2.60	6,816	2.91	7,455	3.37
PCA-P5GA PCH-P5GAH	15	9,462	3.03	10,281	3.34	11,473	3.86
	20	9,089	3.29	9,834	3.60	10,877	4.16
	25	8,791	3.50	9,536	3.91	10,430	4.52
PCA-P6GA PCH-P6GAH	15	10,859	3.70	11,799	4.08	13,167	4.70
	20	10,431	4.01	11,286	4.39	12,483	5.08
	25	10,089	4.26	10,944	4.77	11,970	5.52

Model	Indoor intake air DB (℃)	Outdoor intake air WB (℃)					
		5		10		15	
		CA	P.C.	CA	P.C.	CA	P.C.
PCA-P2GA PCH-P2GAH	15	6,313	2.16	7,125	2.40	7,938	2.59
	20	6,094	2.33	6,875	2.59	7,656	2.78
	25	5,750	2.47	6,625	2.77	7,375	2.99
PCA-P2.5GA PCH-P2.5GAH	15	6,717	2.39	7,581	2.65	8,446	2.86
	20	6,484	2.57	7,315	2.86	8,146	3.07
	25	6,118	2.73	7,049	3.06	7,847	3.30
PCA-P3GA PCH-P3GAH	15	9,292	3.15	10,488	3.50	11,684	3.78
	20	8,970	3.40	10,120	3.78	11,270	4.06
	25	8,464	3.61	9,752	4.04	10,856	4.36
PCA-P4GA PCH-P4GAH	15	10,757	3.45	12,141	3.83	13,526	4.14
	20	10,384	3.72	11,715	4.14	13,046	4.44
	25	9,798	3.94	11,289	4.42	12,567	4.77
PCA-P5GA PCH-P5GAH	15	15,049	4.63	16,986	5.14	18,923	5.55
	20	14,528	4.99	16,390	5.55	18,253	5.96
	25	13,708	5.29	15,794	5.94	17,582	6.40
PCA-P6GA PCH-P6GAH	15	17,271	5.64	19,494	6.27	21,717	6.77
	20	16,673	6.08	18,810	6.77	20,948	7.27
	25	15,732	6.46	18,126	7.24	20,178	7.81

NOTE: CA: Capacity (W) P.C.: Power consumption (kW)

Cooling capacity correction factors

Models	Refrigerant piping length (one way)									
	5m	10m	15m	20m	25m	30m	35m	40m	45m	50m
P1.6	1.00	0.993	0.984	0.978	0.969	0.961	0.956	0.948	—	—
P2	1.00	0.993	0.984	0.978	0.969	0.961	0.956	0.948	—	—
P2.5	1.00	0.989	0.980	0.970	0.960	0.950	0.940	0.930	0.920	0.910
P3	1.00	0.981	0.968	0.952	0.940	0.925	0.913	0.900	0.886	0.874
P4	1.00	0.989	0.980	0.970	0.960	0.950	0.940	0.930	0.920	0.910
P5	1.00	0.981	0.968	0.952	0.940	0.925	0.913	0.900	0.886	0.874
P6	1.00	0.975	0.955	0.935	0.918	0.900	0.884	0.869	0.855	0.840

Heating capacity correction factors

Models	Refrigerant piping length (one way)									
	5m	10m	15m	20m	25m	30m	35m	40m	45m	50m
P1.6	1.00	0.998	0.995	0.993	0.990	0.988	0.985	0.983	—	—
P2	1.00	0.998	0.995	0.993	0.990	0.988	0.985	0.983	—	—
P2.5	1.00	0.998	0.995	0.993	0.990	0.988	0.985	0.983	0.980	0.978
P3	1.00	0.998	0.995	0.993	0.990	0.988	0.985	0.983	0.980	0.978
P4	1.00	0.998	0.995	0.993	0.990	0.988	0.985	0.983	0.980	0.978
P5	1.00	0.998	0.995	0.993	0.990	0.988	0.985	0.983	0.980	0.978
P6	1.00	0.998	0.955	0.993	0.990	0.988	0.985	0.983	0.980	0.978

Cooling performance curve (50Hz)

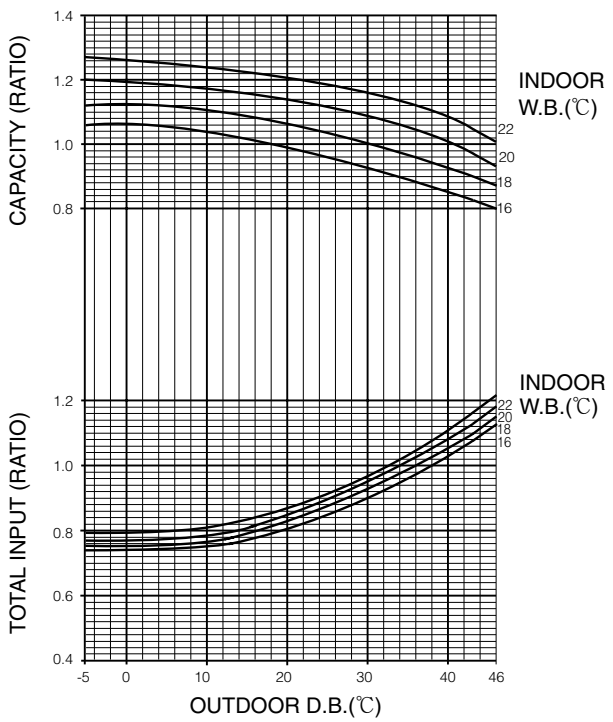

Heating performance curve (50Hz)

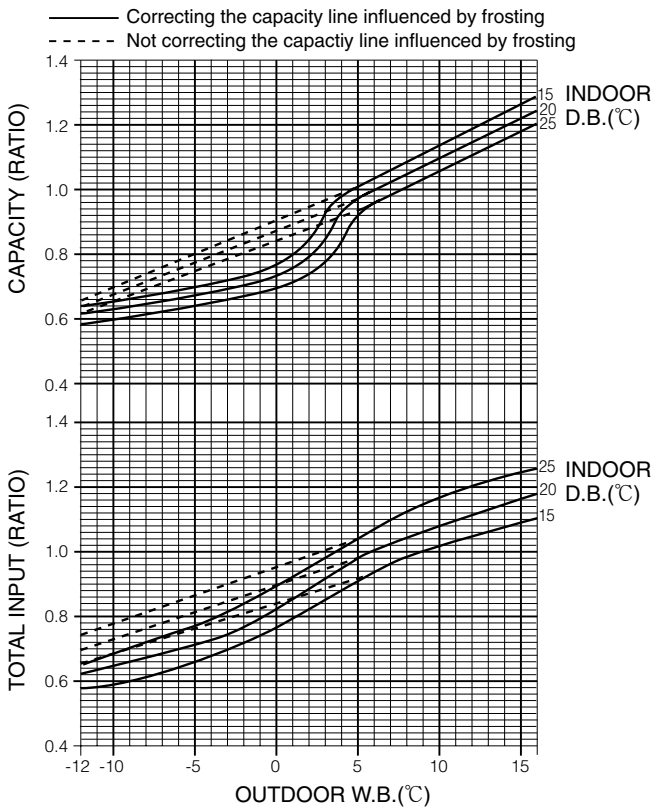

A.3.8 NOISE CRITERION CURVES

Ambient temperature 27˚C

Test conditions are based on JIS Z8731

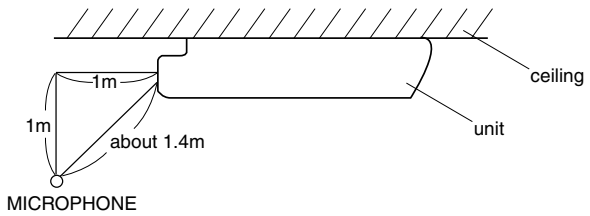

PCH-P2GAH
PCA-P2GA

NOTCH	SPL(dB)	LINE
Hi	42	○——○
Mi1	40	△——△
Mi2	38	●——●
Lo	37	▲——▲

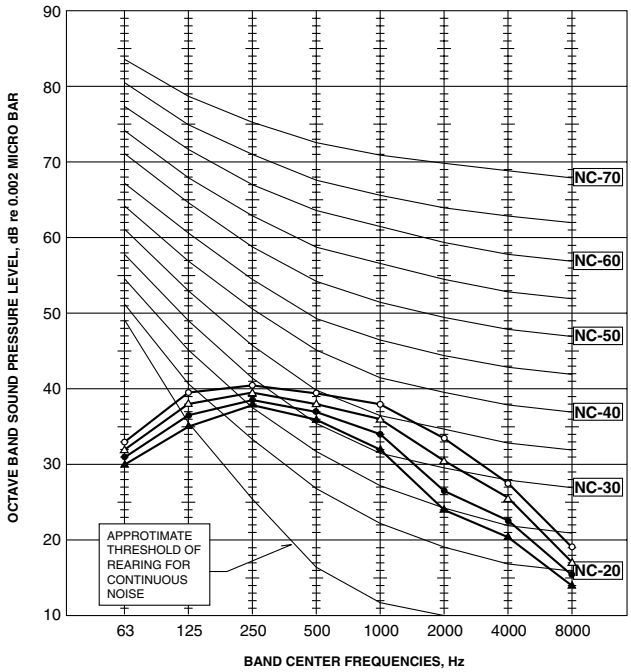

PCH-P2.5/P3GAH
PCA-P2.5/P3GA

NOTCH	SPL(dB)	LINE
Hi	43	○——○
Mi1	41	△——△
Mi2	39	●——●
Lo	37	▲——▲

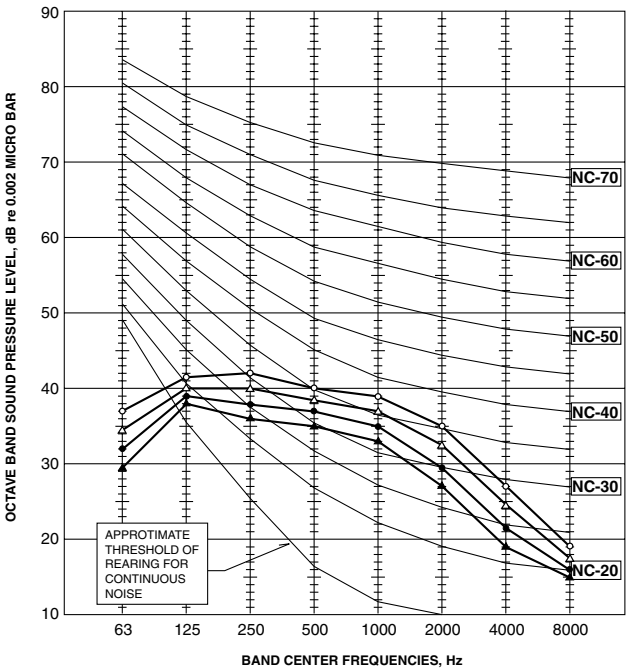

PCH-P4GAH
PCA-P4GA

NOTCH	SPL(dB)	LINE
Hi	45	○——○
Mi1	43	△——△
Mi2	41	●——●
Lo	40	▲——▲

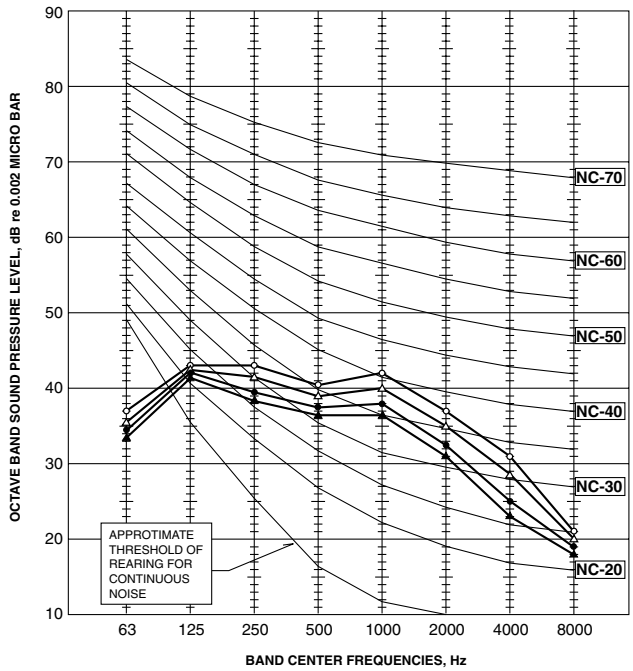

PCH-P5GAH
PCA-P5GA

NOTCH	SPL(dB)	LINE
Hi	46	○——○
Mi1	45	△——△
Mi2	43	●——●
Lo	41	▲——▲

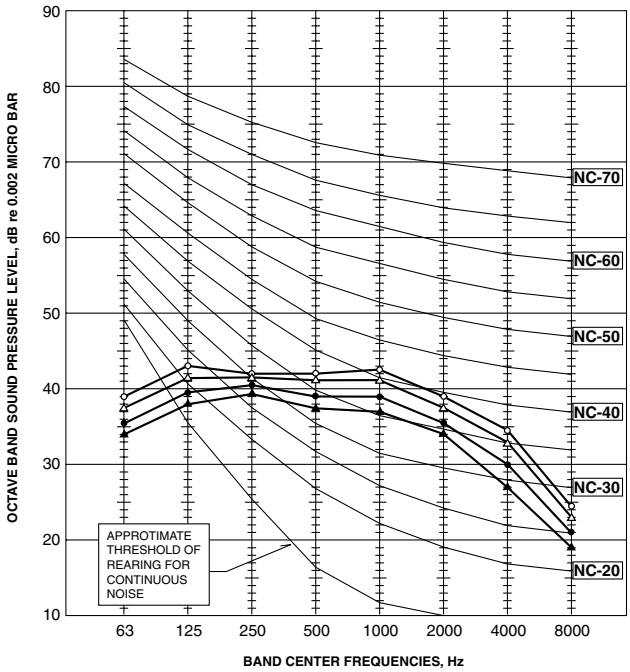

PCH-P6GAH
PCA-P6GA

NOTCH	SPL(dB)	LINE
Hi	48	○——○
Mi1	46	△——△
Mi2	44	●——●
Lo	42	▲——▲

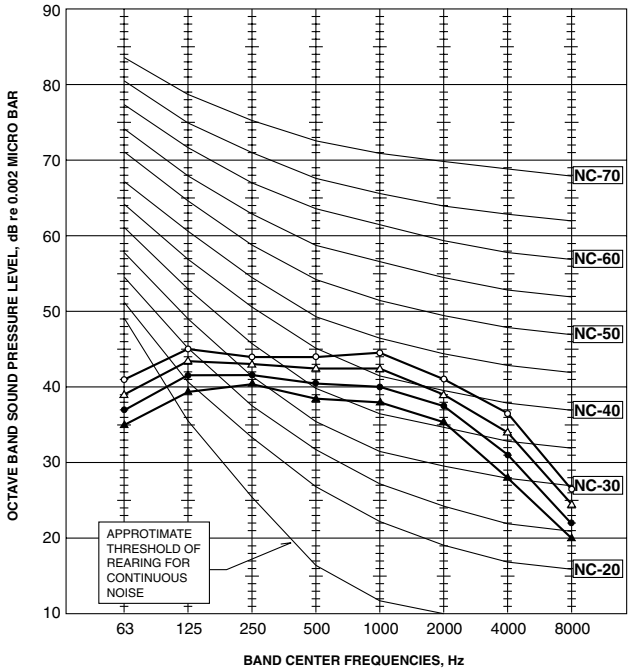

A.3.9 TEMPERATURE AND AIR FLOW DISTRIBUTIONS

PCH-P3GAH, PCA-P3GA

Temperature distribution

<Cooling mode>
Flow angle : 0°
Notch : Hi

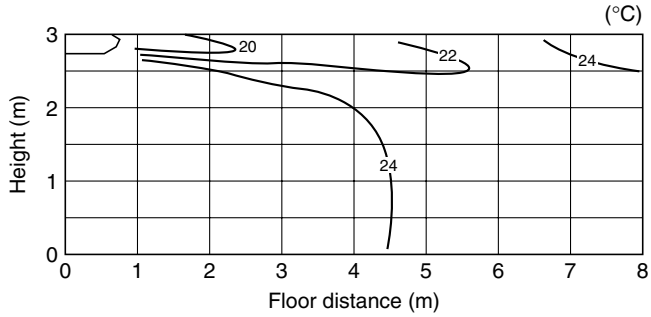

<Heating mode>
Flow angle : 60°
Notch : Hi

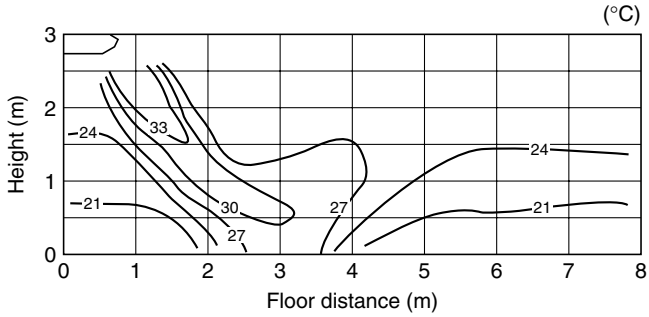

Air flow distribution

<Fan mode>
Flow angle : 0°
Notch : Hi

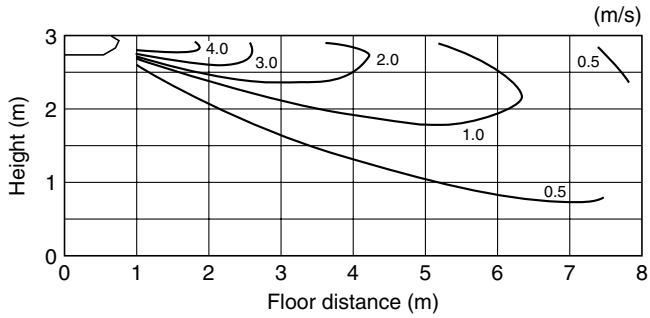

<Fan mode>
Flow angle : 60°
Notch : Hi

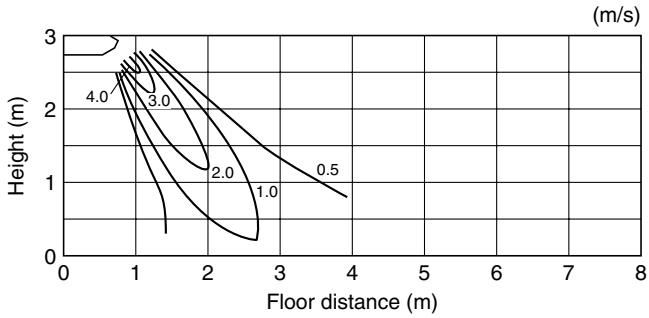

PCH-P5GAH, PCA-P5GA

Temperature distribution

<Cooling mode>
Flow angle : 0°
Notch : Hi

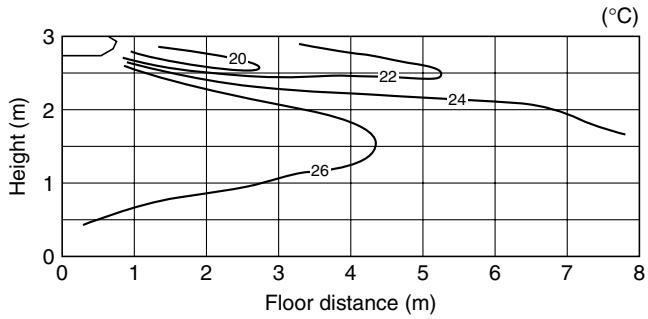

<Heating mode>
Flow angle : 60°
Notch : Hi

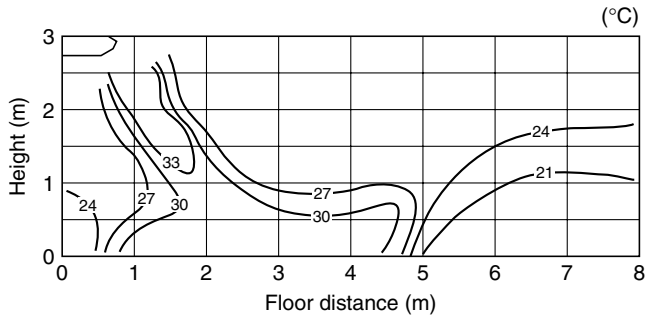

A.3.10 OUTLET AIR SPEED AND COVERAGE RANGE

MODEL	Air flow (m^3/min)	Air speed (m/sec)	Converage (m)
PCH-P2GAH	13	3.7	8.8
PCH-P2.5GAH	18	3.8	10.4
PCH-P3GAH	18	3.8	10.4
PCH-P4GAH	25	4.1	12.6
PCH-P5GAH	34	4.4	15.2
PCH-P6GAH	34	4.4	15.2
PCA-P2GA	13	3.7	8.8
PCA-P2.5GA	18	3.8	10.4
PCA-P3GA	18	3.8	10.4
PCA-P4GA	25	4.1	12.6
PCA-P5GA	34	4.4	15.2
PCA-P6GA	34	4.4	15.2

A.3.11 REMOTE CONTROLLER

Once the controls are set, the same operation mode can be repeated by simply pressing the ON/OFF button.

PCA-P2/P2.5/P3/P4/P5/P6GA
PCH-P2/P2.5/P3/P4/P5/P6GAH

● Operation buttons

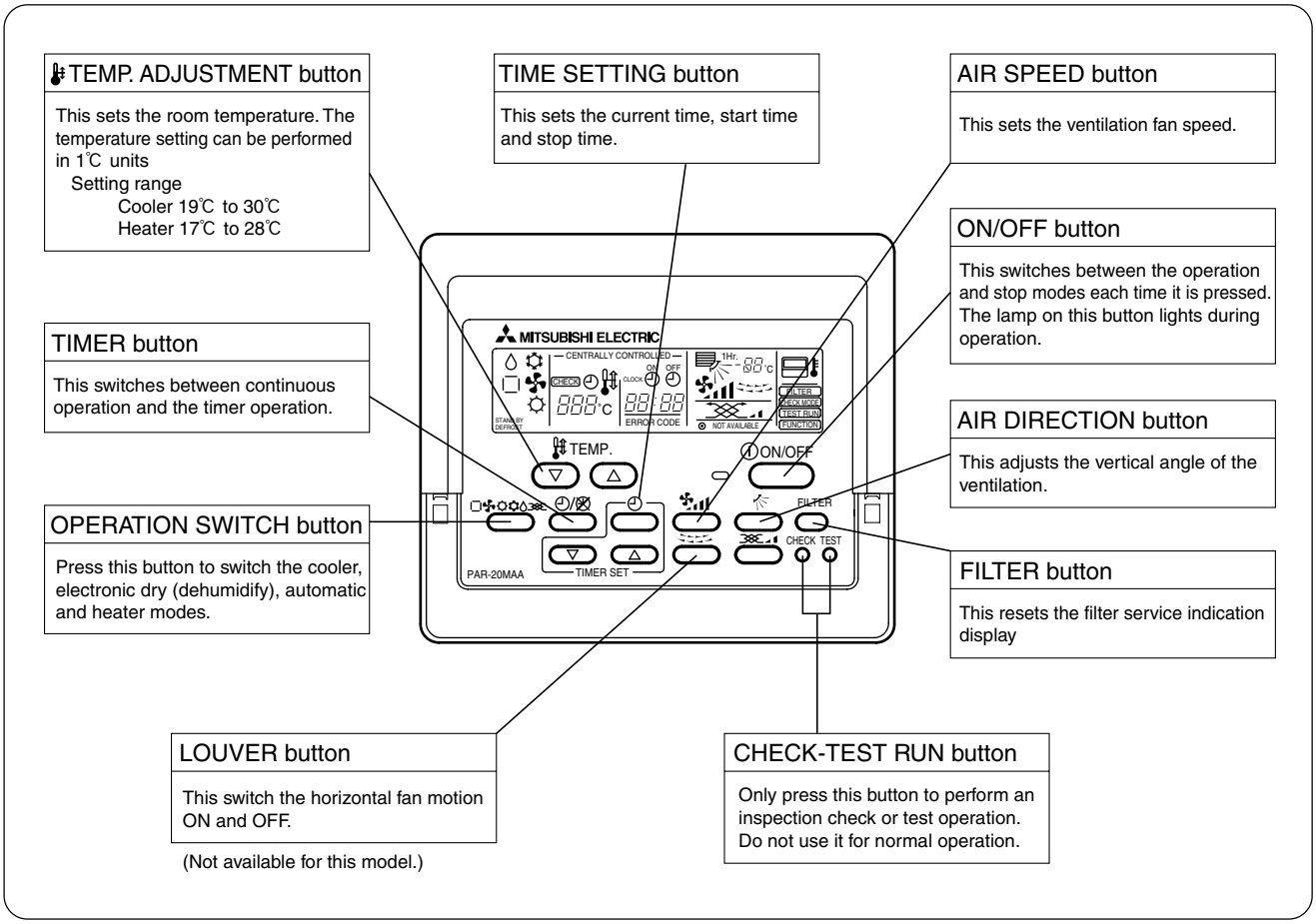

● Display

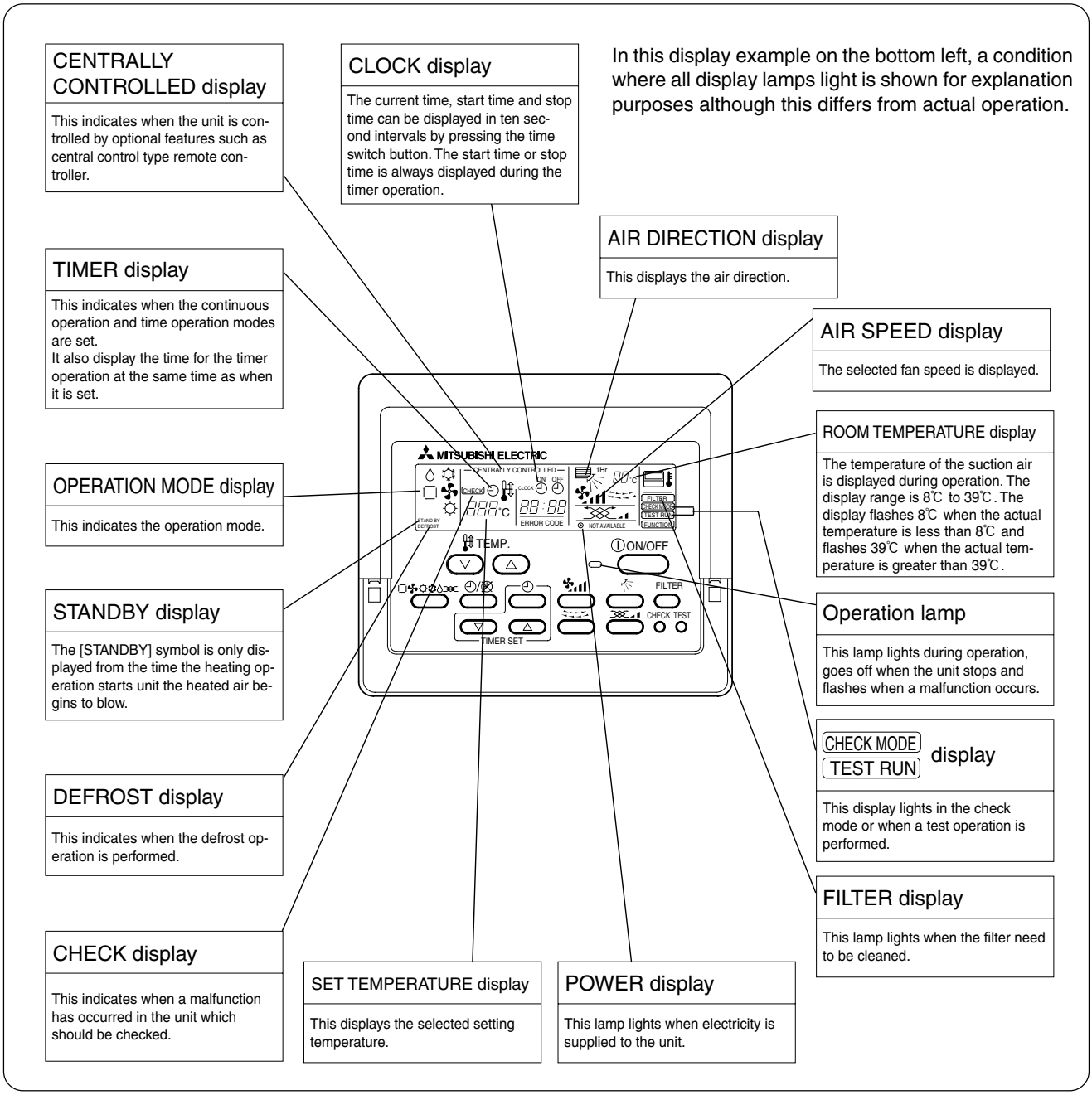

CAUTION:

- Only the Power display lights when the unit is stopped and power supplied to the unit.
- When the central control remote control unit, which is sold separately, is used the ON-OFF button, operation switch button and TEMP. adjustment button do not operate.
- "NOT AVAILABLE" is displayed when the Air speed button are pressed.This indicates that this room unit is not equipped with the fan direction adjustment function and the louver function.
- When power is turned ON for the first time, it is normal that "H0" is displayed on the room temperature indication (For max. 2 minutes). Please wait until this "H0" indication disappear then start the operation.

A.3.12 TROUBLESHOOTING

PCA-P2/P2.5/P3/P4/P5/P6GA
PCH-P2/P2.5/P3/P4/P5/P6GAH
[for wired remote controller]

Problem	Solution
Unit does not cool or heat very well.	Clean the filter.
The unit stops operating before arriving at the set temperature in the heating mode.	Frost forms when the outdoor temperature is low and humidity is high. Wait for about 10 minutes for the frost to melt.
The air flow direction suddenly changes.	After one hour of cooling-mode operation with the air flow in a downward direction, the unit will automatically change to the "Horizontal air flow" mode.
	When the unit is in the heating or defrosting mode, it will automatically change to the "Horizontal air flow mode".
A white mist is expelled from the indoor unit.	This may occur just after the unit is turned on when a high level of humidity is present in the room.
The indicators of the remote controller do not light up when operated.	Turn on the power switch. " · " will be displayed.

Problem	Solution
CENTRALLY CONTROLLED is displayed in the remote controller.	The start and stop functions of the remote controller are not available when the CENTRALLY CONTROLLED message is lit.
The start and stop functions are not available just after restarting the unit.	Wait about three minutes (operation has stopped to prevent damage to the air conditioner).
"H0" is displayed in the remote controller.	An automatic startup test is being performed (will last for about two minutes).
An error code is displayed in the remote controller. The operating display of the wireless remote controller's receiver is flashing.	A self-diagnostic function is being performed to preserve the air conditioner. ∗ Do not attempt to make repairs yourself. Turn the main switch off and contact the dealer from whom you bought the air conditioner. Provide him or her with the name of the unit and the information displayed in the remote controller.

[for wireless remote controller (option)]

Problem	Solution
Unit does not operate at all.	Turn main power on. Then press the POWER ON/OFF button to turn the unit on.
	Wait until power is restored, then press the POWER ON/OFF button to turn the unit on.

Problem	Solution
Unit does not start immediately.	Wait until the unit restarts automatically. The compressor may hesitate resuming because a three-minute resume prevention circuit is incorporated in the outdoor unit for protection of the compressor.

NOTE: After a power cut, the unit will not restart automatically. You will have to restart it by pressing the POWER - ON/OFF button on the remote controller.

If none of the above apply, turn the main switch off and contact the dealer from whom you bought the air-conditioner, telling him the model name and the nature of the problem. Do not try to fix the unit yourself.

In any of the following cases, turn off the main power switch and contact your local dealer for service:
- The operation lamp (on the main unit) flashes.
- The switches do not work properly.
- The circuit breaker trips frequently (or the fuse blows frequently).
- Water has accidentally been splashed into the unit.
- Water leaks from the unit.
- Something is accidentally dropped into the air-conditioner.
- An unusual noise is heard during operation.

The following do not indicate any malfunction:
Odours: smells such as tobacco or cosmetic odours may persist after they have been sucked into the unit.
Sound of liquid flowing inside indoor unit: this can occur during or after operation and is simply the sound of refrigerant being circulated inside the unit.
Ticking sound coming from indoor unit: this can occur when cooling or heating has just begun or has just stopped. It is caused by the indoor unit shrinking or expanding slightly due to the change in temperature.
The message "CENTRALLY CONTROLLED" appearing on the LCD panel: from time to time, this message may come up on the LCD panel. This does not indicate any malfunction.

A.3.13 INSTALLATION PROCEDURE

PCH

The procedure in this section uses the PCH-P2/P2.5/P3/P4/P5/P6GAH series as an example.

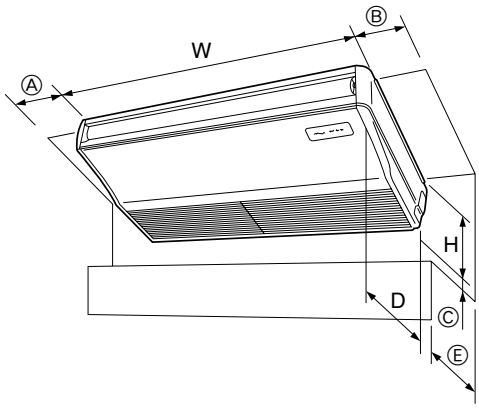

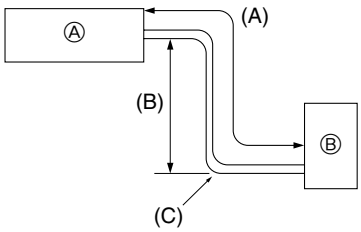

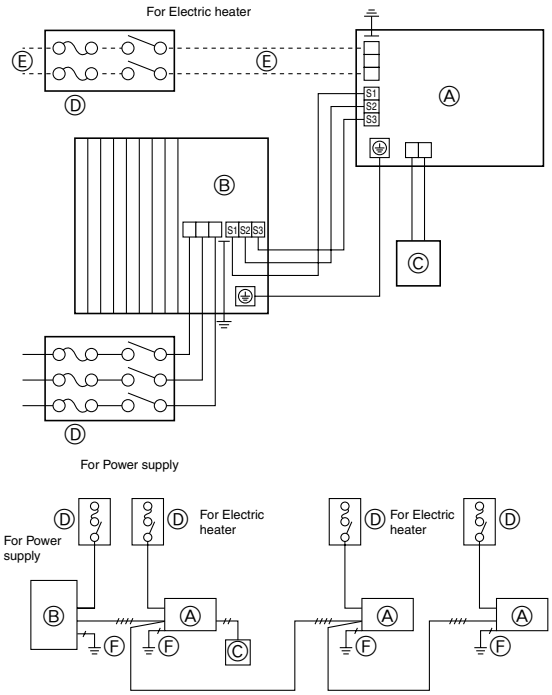

1. Outline dimensions (Indoor unit)

Select a proper position allowing the following clearances for installation and maintenance.

(mm)

Models	W	D	H	Ⓐ	Ⓑ	Ⓒ	Ⓔ
P2	1000	680	221	Min. 270	Min. 300	Min. 500	Max. 250
P2.5, P3	1310	680	221	Min. 270	Min. 300	Min. 500	Max. 250
P4	1310	680	281	Min. 270	Min. 300	Min. 500	Max. 250
P5, 6	1620	680	281	Min. 270	Min. 300	Min. 500	Max. 250

⚠ **Warning:**
Mount the indoor unit on a ceiling strong enough to withstand the weight of the unit.

2. Refrigerant pipe

Ⓐ Indoor unit Ⓑ Outdoor unit

Models	(A) Pipe length (one way)	(B) Height difference	(C) Number of bends (one way)
P2	max. 40 m	max. 40 m	max. of 12
P2.5,P3,P4,P5,P6	max. 50 m	max. 50 m	max. of 15

3. Electrical work precautions

- The compressor will not operate unless the power supply phase connection is correct.
- Grounding protection with a no-fuse breaker (earth leakage breaker [ELB]) is usually installed for Ⓓ.
- The connection wiring between the outdoor and indoor units can be extended up to a maximum of 50 meters, and the total extension including the crossover wiring between rooms is a maximum of 80 m.

Ⓐ Indoor unit
Ⓑ Outdoor unit
Ⓒ Remote controller
Ⓓ Main switch/fuse
Ⓔ For only Electric heater
Ⓕ Grounding

A switch with at least 3 mm contact separation in each pole shall be provided by the air conditioner installation.
∗ Label each breaker according to purpose (heater, unit etc.)

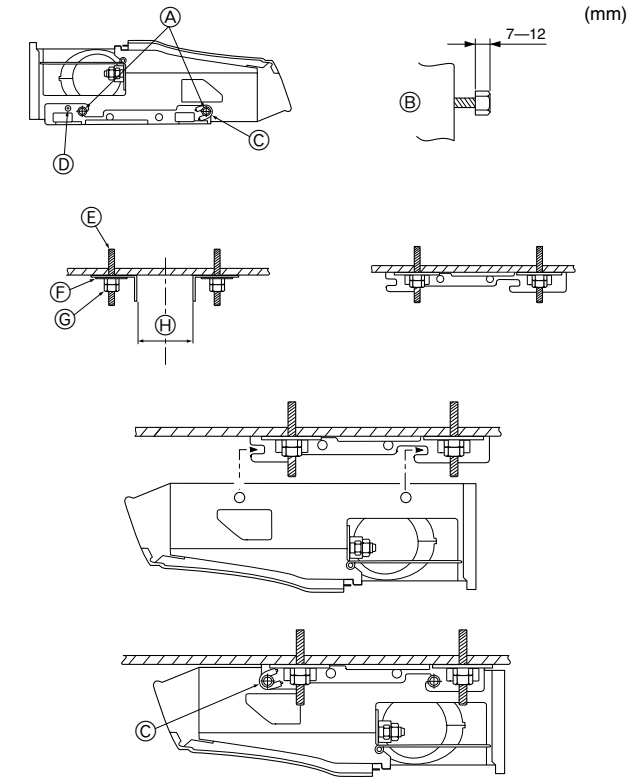

4. Installing

Installing procedures

1. Remove the suspending brackets, U-shaped washers, and suspending bracket holding screws from the unit.
2. Adjust the suspending bracket holding bolts on the unit.
3. Attach the suspending brackets to the suspending bolts.
4. Set (hook) the unit to the suspending brackets.

∗ Be sure to install the U-shaped washers.

Ⓐ Bolt
Ⓑ Unit
Ⓒ Washer
Ⓓ Suspending bracket holding screw
Ⓔ Bolt
Ⓕ Washer ①
Ⓖ Double nuts

(mm)

Ⓗ	
P2	900 - 905
P2.5, P3, P4	1207 - 1212
P5, P6	1514 - 1519

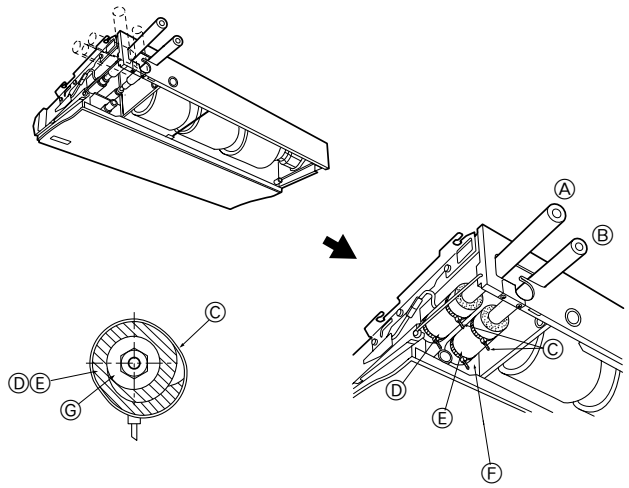

5. Refrigerant pipng work

Installing procedures

1. Slide the supplied pipe cover ② over the gas piping until it is pressed against the sheet metal inside the unit.
2. Slide the provided pipe cover ③ over the liquid piping until it is pressed against the sheet metal inside the unit.
3. Tighten the pipe covers ② and ③ at the both ends (15 - 20 mm) with the supplied bands ④.

Ⓐ Gas piping
Ⓑ Liquid piping
Ⓒ Band ④
Ⓓ Pipe cover ②
Ⓔ Pipe cover ③
Ⓕ Press the pipe cover against the sheet metal.
Ⓖ Refrigerant piping heat insulating material

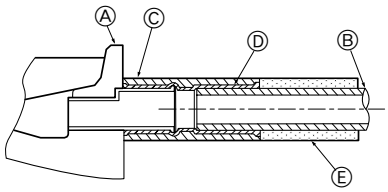

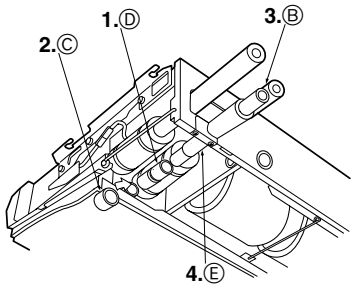

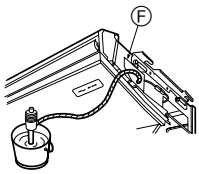

6. Drain pipng work

Installing procedures

1. Attach the joint socket ⑤ supplied with the unit to the drain port on the unit with a vinyl chloride adhesive.
2. Fasten the socket cover ⑥ supplied with the unit to the joint socket ⑤.
3. Attach the field drain piping (VP 20) to the joint socket ⑤ with a vinyl chloride adhesive.
4. Wrap the drain piping cover ⑦ supplied with the unit. (Seam taping)
   - Ⓐ Drain pan
   - Ⓑ Drain piping
   - Ⓒ Socket cover ⑥
   - Ⓓ Joint socket ⑤
   - Ⓔ Drain piping cover ⑦
5. Check for correct drainage.
   - Ⓕ Inspection hole

∗ Fill the drain pan with water of about 1 L from the piping sensor access port.
∗ After checking for correct drainage, replace the inspection panel.

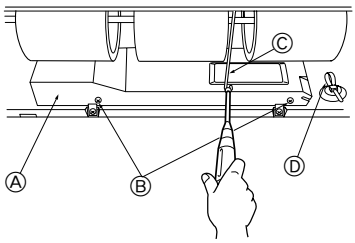

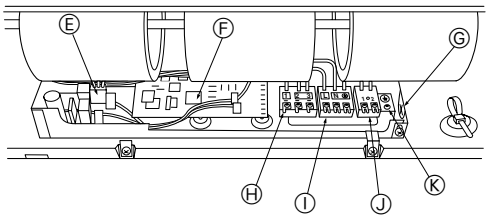

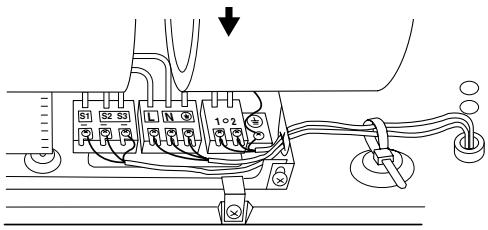

7. Electric wiring

Wiring procedures

1. Remove the (two) tapping screws then remove the electric part cover.
2. Connect the electric wires securely to the corresponding terminals.
3. Replace the removed parts.
4. Tie the electric wires with the local wiring clamp located in the right side of the junction box.
   - Ⓐ Cover
   - Ⓑ Set screws
   - Ⓒ Beam
   - Ⓓ Wiring clamp
   - Ⓔ Power supply board
   - Ⓕ Control board
   - Ⓖ Wire service entrance
   - Ⓗ Terminal block for indoor and outdoor units connection
   - Ⓘ Terminal block for electric heater power supply (for only PCH models)
   - Ⓙ Terminal block for remote controller
   - Ⓚ Grounding cable connector

A.3.14 ACCESSORIES AND PARTS

PCA-P2/P2.5/P3/P4/P5/P6GA
PCH-P2/P2.5/P3/P4/P5/P6GAH

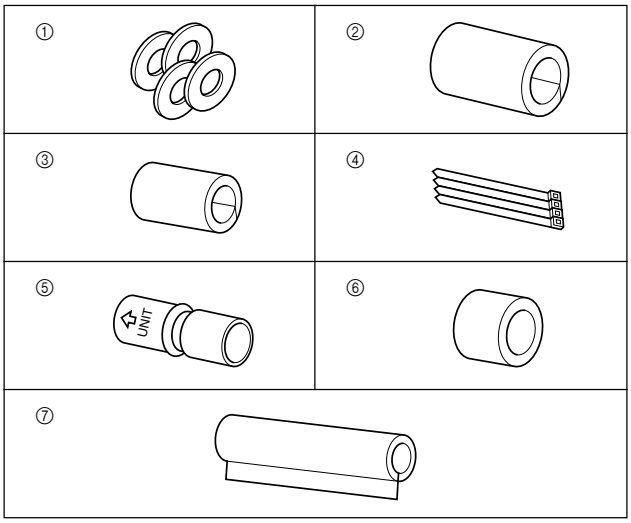

The indoor unit should be supplied with the following spare parts and accessories (contained in the inside of the intake grille).

Part number	Accessory	Quantity	
①	Washer	4 pcs	
②	Pipe cover	1 pc	Large size (For gas piping)
③	Pipe cover	1 pc	Small size (For liquid piping)
④	Band	4 pcs	
⑤	Joint socket	1 pc	Marked with “UNIT”
⑥	Socket cover	1 pc	
⑦	Drain piping cover	1 pc	

A.3.15 SAFETY DEVICE SETTINGS

PCA-P2/P2.5/P3/P4/P5/P6GA
PCH-P2/P2.5/P3/P4/P5/P6GAH

Safety device \ Model	PCA-P2GA	PCA-P2.5GA	PCA-P3GA	PCH-P2GAH	PCH-P2.5GAH	PCH-P3GAH
Fan motor thermal protector	OFF 130±5℃ ON 80±20℃			OFF 130±5℃ ON 80±20℃		
Thermal fuse	—			OFF 98℃ AC250V 10A	OFF 110℃ AC250V 16A	
Heater thermal switch	—			ON 50±5℃ OFF 35±5℃		

Safety device \ Model	PCA-P4GA	PCA-P5GA	PCA-P6GA	PCH-P4GAH	PCH-P5GAH	PCH-P6GAH
Fan motor thermal protector	OFF 130±5℃ ON 80±20℃			OFF 130±5℃ ON 80±20℃		
Thermal fuse	—			OFF 117℃ AC250V 16A	OFF 110℃ AC250V 16A	
Heater thermal switch	—			ON 50±5℃ OFF 35±5℃		

A.3.16 SYSTEM CONTROL

PCA-P·GA, PCH-P·GAH

VARIETY OF SYSTEM CONTROL FUNCTIONS

(1) System construction

A-control model which just wires the connecting line between the indoor and outdoor unit and supply the power is applicable to any models of standard (1:1), twin and triple. (Refer to 2 Start-up system.)

		Standard 1:1	Synchronized twin. Triple
System contruction		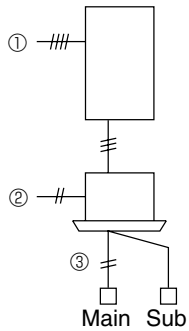 ① Unit (indoor/outdoor) power supply L1/L2/L3/N ② Connecting line between the indoor and outdoor; S1/S2/S3, Polarized 3-wire ③ Remote controller transmission line; Non polarezed 2-wire ④ Auxiliary heater exclusive power supply; L/N	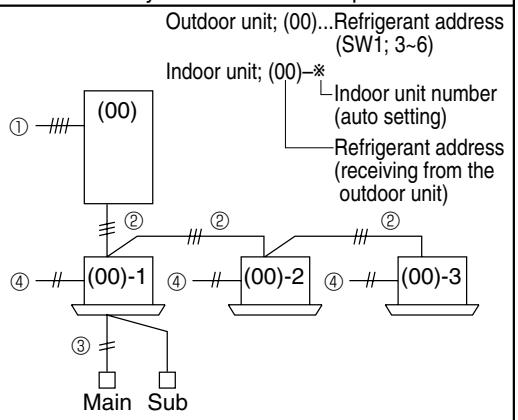 ① Unit (indoor/outdoor) power supply L1/L2/L3/N ② Connecting line between the indoor and outdoor; S1/S2/S3, Polarized 3-wire ③ Remote controller transmission line; Non polarezed 2-wire ④ Auxiliary heater exclusive power supply; L/N
Various setting	Remote controller	Remote control main/sub setting necessity (In case of 2 remote controllers)	Remote control main/sub setting necessity (In case of 2 remote controllers)
	Indoor unit	No setting	No setting (initial setting)
	Outdoor unit	No setting	No setting (initial setting)
Remarks			(1) Indoor unit umber is set automatically
		Group control	
System contruction		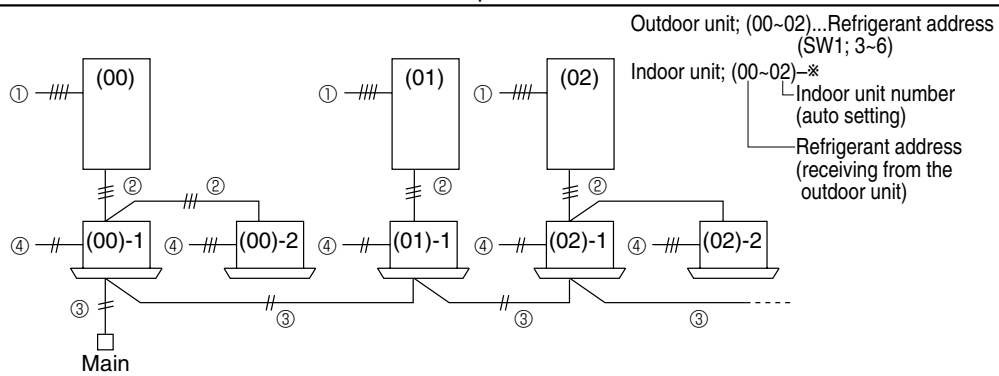 ① Unit (indoor/outdoor) power supply L1/L2/L3/N ② Connecting line between the indoor and outdoor; S1/S2/S3, Polarized 3-wire ③ Remote controller transmission line; Non polarezed 2-wire ④ Auxiliary heater exclusive power supply; L/N	
Various setting	Remote controller	Remote control main/sub setting necessity (In case of 2 remote controllers)	
	Indoor unit	No setting (initial setting)	
	Outdoor unit	Refrigerant address setting; SW1; 3~6	
Remarks		(1) Indoor unit umber is set automatically (2) When the refrigerant address of the unit is “00”, Remote controller is supplied.	