A.1 CEILING CASSETTE PL SERIES

A.1.1 FEATURES A-6
A.1.2 SPECIFICATIONS A-8
A.1.2.1 Heat Pump (Refrigerant R407C) A-8
A.1.2.2 Cool Only (Refrigerant R407C) A-15
A.1.3 ELECTRICAL DATA A-19
A.1.3.1 Heat Pump (Refrigerant R407C) A-19
A.1.3.2 Cool Only (Referigerant R407C) A-22
A.1.4 OUTLINES AND DIMENSIONS A-24
A.1.5 WIRING DIAGRAM A-26
A.1.6 REFRIGERANT SYSTEM DIAGRAM A-28
A.1.7 PERFORMANCE DATA A-32
A.1.8 FRESH AIR INTAKE AMOUNT A-50
A.1.9 BRANCH DUCT (Installation at site) A-52
A.1.10 NOISE CRITERION CURVES A-53
A.1.11 TEMPERATURE AND AIR FLOW DISTRIBUTIONS A-55
A.1.12 OUTLET AIR SPEED AND COVERAGE RANGE A-58
A.1.13 REMOTE CONTROLLER A-59
A.1.13.1 Wired Remote Controller A-59
A.1.13.2 Wireless Remote Controller A-61
A.1.14 TROUBLESHOOTING A-62
A.1.15 INSTALLATION PROCEDURE A-63
A.1.16 ACCESSORIES AND PARTS A-70
A.1.17 SAFETY DEVICE SETTINGS A-72
A.1.18 SYSTEM CONTROL A-73

Back to Index page

A.1.1 FEATURES

● **Indoor (Main) Unit** **In case of PLH-P2KAH**

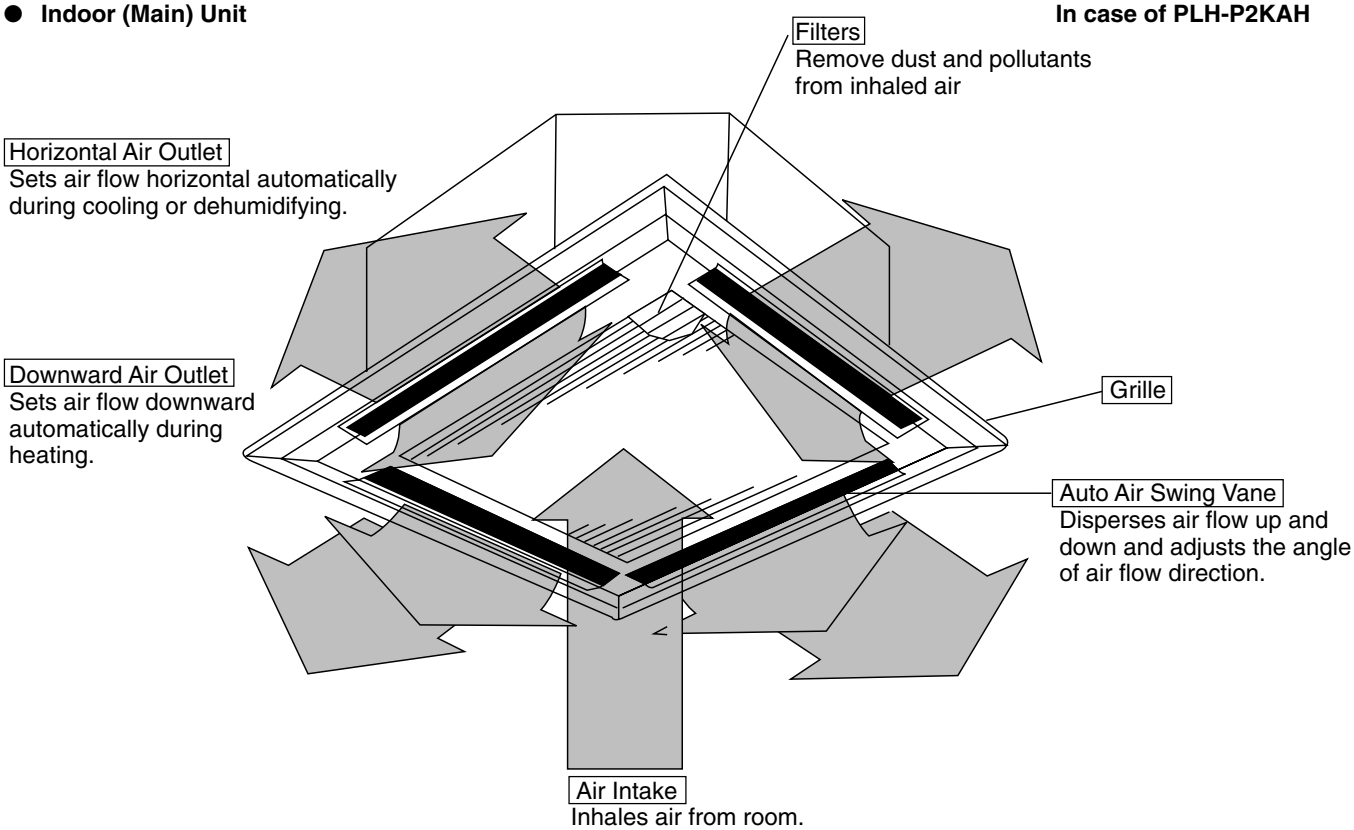

1. **SMOOTH-RUNNING, ATTRACTIVE, FEATURE-RICH UNITS POSSESS THE VERSATILITY AND THE POWER NEEDED FOR A LARGE ARRAY OF APPLICATIONS.**
2. **PERFECT PANEL SIZES**
   The PL series is available in two sizes to ensure a perfect fit with your application. Both the ultra-compact 760mm square P1.6/P2/P2.5 types and the slightly larger 950mm square P3/P4/P5/P6 types are slim, attractive, yet powerful units. The new 950mm square size of the three to six horsepower units constitutes a reduction of approximately one - third compared with previous models. What's more the new AA model is 20% lighter than the previous model, having slimmed down from 46kg to a mere 37kg. This makes for easier maintenance and simplified suspension.
3. **ATTRACTIVE , SLIM UNITS**
   With heights of only 258mm for the P3 unit and only 298mm for the P4/P5/P6AA units, the smooth, aesthetic installation of the PL series is as attractive as it is inconspicuous.
4. **72 PATTERNS OF AIR FLOW (FOR AA ONLY)**
   Rooms can differ in hundreds of ways, from size, layout and purpose of use to the objects they contain. For this reason, PL ceiling cassettes can be adjusted to produced 72 variations of air flow to perfectly match the requirements of a wide range of applications. The 72 patterns are produced by selecting two-, three-, or four-way air flow, than adjusting each vane either manually or by remote control. This makes possible highly customized, flexible patterns of flow.
5. **HIGH CEILING COMPATIBLE (FOR AA ONLY)**
   PL ceiling cassettes are equipped with wide-flow air outlets that make precision air conditioning of spaces with high ceilings of up to 4.2 meters possible. The height and width ratios of the air outlets have been optimized to provide a smoother flow of air that encounters less resistance.

6. STATE-OF-THE-ART AIR CONTROL

Mitsubishi Electric's newly developed mechanism for controlling the flow of air ensures that cool air reaches the floor level faster, reduces bothersome drafts, and prevents the phenomenon of smudging. Smudging, a staining of the ceiling as it is constantly hit with direct air flow, is prevented by specially designed air passages and vanes that evenly distribute air and precisely control its direction.

7. EXCEPTIONALLY QUIET OPERATION

Reduced air flow resistance and redesigned shape of the heat exchanger fin make this one of the quietest running machines in the industry.

8. AIR QUALITY MEASURES

The direct intake of fresh, exterior air, along with filters that resist the proliferation of bacteria, and drain pans that prevent the growth of mold combine to ensure refreshing air of the highest quality.

9. AUTOMATIC VANE SHUTTER (FOR AA ONLY)

When the air conditioner is not operating, the vane shutter automatically closes flush with the unit body to conceal the air outlet and create an appealing flat surface.*

*Shutter will stay open if vane has been set to a fixed position.

10. VERSATILE DRAIN PIPE

Thanks to the adoption of a high-performance pump, the pipe for drain water can be positioned anywhere up to an industry- leading 850mm from the ceiling surface.
(Up to 500mm with KA/KAH units.)

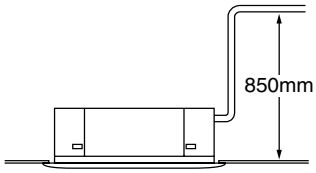

11. EASY FILTER CLEANING (FOR KA ONLY)

The grille opens smoothly and easily with the touch of a button preventing the scattering of dirt and dust adhering to the filter when removing to clean.

A.1.2 SPECIFICATIONS

A.1.2.1 Heat Pump (Refrigerant R407C)

Item \ Model			With Electric heater / Without Electric heater	PLH-P3AAH / PLA-P3AA	
Function				Cooling	Heating
Capacity ※1			Btu/h	26,600	31,700 [38,900]
			W	7,800	9,300 [11,400]
Total input ※1			kW	3.44	3.50 [5.60]
Indoor unit	Model name		With Electric heater / Without Electric heater	PLH-P3AAH / PLA-P3AA	
	Power supply (phase, cycle,voltage)			Single phase, 50Hz, 220-230-240V	
	Fan	Input ※2	kW	0.17	0.17 <2.10>
		Running current ※2	A	0.81	0.81 <8.75>
		Starting current ※2	A	1.0	1.0 <8.75>
	External finish (Panel)			Munsell 0.70Y 8.59/0.97	
	Heat exchanger			Plate fin coil	
	Fan	Fan (drive) × No.		Turbo fan (direct) × 1	
		Fan motor output	kW	0.070	
		Air flow (Lo-Mi2-Mi1-Hi)	m³ / min (CFM)	15-16-18-20 (530-565-635-705)	
		External static pressure	Pa (mmAq)	0 (direct blow)	
	Booster heater ※2		kW	<2.1>	
	Operation control & Thermostat			Remote controller & built-in	
	Noise level (Lo-Mi2-Mi1-Hi)		dB	28-30-32-34	
	Unit drain pipe I.D.		mm (in.)	32 (1-1/4)	
	Dimensions	W	mm (in.)	UNIT : 840 (33-1/16) PANEL : 950 (37-3/8)	
		D	mm (in.)	UNIT : 840 (33-1/16) PANEL : 950 (37-3/8)	
		H	mm (in.)	UNIT : 258 (10-1/2) PANEL : 30 (1-3/16)	
	Weight	With electric heater	kg (lbs.)	UNIT : 26 (57) PANEL : 5 (11)	
		Without electric heater	kg (lbs.)	UNIT : 24 (53) PANEL : 5 (11)	
Outdoor unit	Model name			PUH-P3VGAA / P3YGAA	
	Power supply (phase, cycle, voltage)			Single phase, 50Hz, 220-230-240V / 3 phases, 50Hz, 380-400-415V (4wires)	
		Input	kW	3.27	3.48
		Running current	A	14.81 / 5.29	15.76 / 5.63
		Starting current	A	93 / 47	
	External finish			Munsell 5Y 7/1	
	Refrigerant control			Linear expansion valve	
	Compressor			Hermetic	
		Model		NE52VNJMT / NE52YDKMT	
		Motor output	kW	2.5	
		Starter type		Line start	
		Protection devices		Internal thermostat, HP switch, Discharge thermo. / Thermal relay, HP switch, Discharge thermo.	
	Heat exchanger			Plate fin coil	
	Fan	Fan (drive) × No.		Propeller (direct) × 1	
		Fan motor output	kW	0.070	
		Air flow	m³ / min (CFM)	50 (1,770)	
	Crankcase heater		W	38	
	Defrost method			Reverse cycle	
	Noise level	Cooling	dB	49	
		Heating	dB	51	
	Dimensions	W	mm (in.)	900 (35-7/16)	
		D	mm (in.)	330+20 (13+3/4)	
		H	mm (in.)	855 (33-5/8)	
	Weight		kg (lbs.)	82 (181)	
Refrigerant piping	Refrigerant			R407C	
		Charge	kg (lbs.)	3.3 (7.3)	
		Oil (Model)	L	1.3 (Ester) MEL56	
	Pipe size O.D.	Liquid	mm (in.)	9.52 (3/8)	
		Gas	mm (in.)	15.88 (5/8)	
	Connection method	Indoor side		Flared	
		Outdoor side		Flared	
	Between the indoor & outdoor units	Height difference		Max. 50m	
		Piping length		Max. 50m	

NOTE:

1. Rating conditions (ISO T1)
   Cooling : Indoor : D.B. 27˚C (80˚F), W.B. 19˚C (66˚F) Outdoor : D.B. 35˚C (95˚F), W.B. 24˚C (75˚F)
   Heating : Indoor : D.B. 20˚C (68˚F) Outdoor : D.B. 7˚C (45˚F), W.B. 6˚C (43˚F)
   Refrigerant piping length (one way) : 5m (16ft)
2. Guaranteed operating range

		Indoor	Outdoor
Cooling	Upper limit	D.B. 35˚C, W.B. 22.5˚C	D.B. 46˚C
	Lower limit	D.B. 19˚C, W.B. 15˚C	D.B. -5˚C
Heating	Upper limit	D.B. 28˚C	D.B. 24˚C, W.B. 18˚C
	Lower limit	D.B. 17˚C	D.B. -11˚C, W.B. -12˚C

※1 : [ ] Shows the total rating.
※2 : < > Shows the only booster heater rating.

3. Above data based on indicated voltage
   Indoor unit Single phase 240V 50Hz
   Outdoor unit Single phase 240V 50Hz / 3 phases 415V 50Hz

Item			Model	With Electric heater	PLH-P4AAH	
				Without Electric heater	PLA-P4AA	
Function					Cooling	Heating
Capacity ※1				Btu/h	33,100	36,200 [43,300]
				W	9,700	10,600 [12,700]
Total input ※1				kW	3.69	3.93 [6.03]
Indoor unit	Model name			With Electric heater	PLH-P4AAH	
				Without Electric heater	PLA-P4AA	
	Power supply (phase, cycle,voltage)				Single phase, 50Hz, 220-230-240V	
		Input ※2		kW	0.26	0.26 <2.60>
		Running current ※2		A	1.25	1.25 <10.83>
		Starting current ※2		A	2.0	2.0 <10.83>
	External finish (Panel)				Munsell 0.70Y 8.59/0.97	
	Heat exchanger				Plate fin coil	
	Fan	Fan (drive) × No.			Turbo fan (direct) × 1	
		Fan motor output		kW	0.120	
		Air flow (Lo-Mi2-Mi1-Hi)		m³ / min (CFM)	20-23-26-28 (705-810-920-990)	
		External static pressure		Pa (mmAq)	0 (direct blow)	
	Booster heater ※2			kW	<2.6>	
	Operation control & Thermostat				Remote controller & built-in	
	Noise level (Lo-Mi2-Mi1-Hi)			dB	33-36-39-41	
	Unit drain pipe I.D.			mm (in.)	32 (1-1/4)	
	Dimensions		W	mm (in.)	UNIT : 840 (33-1/16)	PANEL : 950 (37-3/8)
			D	mm (in.)	UNIT : 840 (33-1/16)	PANEL : 950 (37-3/8)
			H	mm (in.)	UNIT : 298 (11-3/4)	PANEL : 30 (1-3/16)
	Weight	With electric heater		kg (lbs.)	UNIT : 32 (71)	PANEL : 5 (11)
		Without electric heater		kg (lbs.)	UNIT : 30 (66)	PANEL : 5 (11)
Outdoor unit	Model name				PUH-P4VGAA / P4YGAA	
	Power supply (phase, cycle, voltage)				Single phase, 50Hz, 220-230-240V / 3 phases, 50Hz, 380-400-415V (4wires)	
		Input		kW	3.43	3.62
		Running current		A	15.71 / 5.55	16.58 / 5.86
		Starting current		A	99 / 49	
	External finish				Munsell 5Y 7/1	
	Refrigerant control				Linear expansion valve	
	Compressor				Hermetic	
		Model			NE56VNJMT / NE56YDKMT	
		Motor output		kW	2.7	
		Starter type			Line start	
		Protection devices			Internal thermostat, HP switch, Discharge thermo. / Thermal relay, HP switch, Discharge thermo.	
	Heat exchanger				Plate fin coil	
	Fan	Fan (drive) × No.			Propeller (direct) × 2	
		Fan motor output		kW	0.070+0.070	
		Air flow		m³ / min (CFM)	85 (3,000)	
	Crankcase heater			W	38	
	Defrost method				Reverse cycle	
	Noise level		Cooling	dB	51	
			Heating	dB	53	
	Dimensions		W	mm (in.)	900 (35-7/16)	
			D	mm (in.)	330+20 (13+3/4)	
			H	mm (in.)	1,260 (49-5/8)	
	Weight			kg (lbs.)	96 (212)	
Refrigerant piping	Refrigerant				R407C	
		Charge		kg (lbs.)	4.0 (8.8)	
		Oil (Model)		L	1.3 (Ester) MEL56	
	Pipe size O.D.		Liquid	mm (in.)	9.52 (3/8)	
			Gas	mm (in.)	19.05 (3/4)	
	Connection method		Indoor side		Flared	
			Outdoor side		Flared	
	Between the indoor & outdoor units		Height difference		Max. 50m	
			Piping length		Max. 50m	

NOTE:

1. Rating conditions (ISO T1)
   Cooling : Indoor : D.B. 27℃ (80˚F), W.B. 19℃ (66˚F) Outdoor : D.B. 35℃ (95˚F), W.B. 24℃ (75˚F)
   Heating : Indoor : D.B. 20℃ (68˚F) Outdoor : D.B. 7℃ (45˚F), W.B. 6℃ (43˚F)
   Refrigerant piping length (one way) : 5m (16ft)
2. Guaranteed operating range

		Indoor	Outdoor
Cooling	Upper limit	D.B. 35℃, W.B. 22.5℃	D.B. 46℃
	Lower limit	D.B. 19℃, W.B. 15℃	D.B. -5℃
Heating	Upper limit	D.B. 28℃	D.B. 24℃, W.B. 18℃
	Lower limit	D.B. 17℃	D.B. -11℃, W.B. -12℃

※1 : [ ] Shows the total rating.
※2 : < > Shows the only booster heater rating.

3. Above data based on indicated voltage
   Indoor unit Single phase 240V 50Hz
   Outdoor unit Single phase 240V 50Hz / 3 phases 415V 50Hz

Item				Model / With Electric heater	Without Electric heater	
				PLH-P5AAH	PLA-P5AA	
Function				Cooling	Heating	
Capacity ※1			Btu/h	43,700	50,800 [61,100]	
			W	12,800	14,900 [17,900]	
Total input ※1			kW	5.00	5.34 [8.34]	
Indoor unit	Model name		With Electric heater	PLH-P5AAH		
			Without Electric heater	PLA-P5AA		
	Power supply (phase, cycle,voltage)			Single phase, 50Hz, 220-230-240V		
	Input ※2		kW	0.30	0.30 <3.00>	
	Running current ※2		A	1.43	1.43 <12.50>	
	Starting current ※2		A	2.0	2.0 <12.50>	
	External finish (Panel)			Munsell 0.70Y 8.59/0.97		
	Heat exchanger			Plate fin coil		
	Fan	Fan (drive) × No.		Turbo fan (direct) × 1		
		Fan motor output	kW	0.120		
		Air flow (Lo-Mi2-Mi1-Hi)	m³ / min (CFM)	22-25-28-30 (775-880-990-1,060)		
		External static pressure	Pa (mmAq)	0 (direct blow)		
	Booster heater ※2		kW	<3.0>		
	Operation control & Thermostat			Remote controller & built-in		
	Noise level (Lo-Mi2-Mi1-Hi)		dB	35-38-41-43		
	Unit drain pipe I.D.		mm (in.)	32 (1-1/4)		
	Dimensions	W	mm (in.)	UNIT : 840 (33-1/16)	PANEL : 950 (37-3/8)	
		D	mm (in.)	UNIT : 840 (33-1/16)	PANEL : 950 (37-3/8)	
		H	mm (in.)	UNIT : 298 (11-3/4)	PANEL : 30 (1-3/16)	
	Weight	With electric heater	kg (lbs.)	UNIT : 32 (71)	PANEL : 5 (11)	
		Without electric heater	kg (lbs.)	UNIT : 30 (66)	PANEL : 5 (11)	
Outdoor unit	Model name			PUH-P5YGAA		
	Power supply (phase, cycle, voltage)			3 phases, 50Hz, 380-400-415V (4wires)		
	Input		kW	4.70	5.04	
	Running current		A	7.60	8.15	
	Starting current		A	65.5		
	External finish			Munsell 5Y 7/1		
	Refrigerant control			Linear expansion valve		
	Compressor			Hermetic		
		Model		ZR61KCE-TFD		
		Motor output	kW	3.5		
		Starter type		Line start		
		Protection devices		Internal thermostat, Thermal relay, HP switch, Discharge thermo.		
	Heat exchanger			Plate fin coil		
	Fan	Fan (drive) × No.		Propeller (direct) × 2		
		Fan motor output	kW	0.070+0.070		
		Air flow	m³ / min (CFM)	95 (3,360)		
	Crankcase heater		W	38		
	Defrost method			Reverse cycle		
	Noise level	Cooling	dB	55		
		Heating	dB	56		
	Dimensions	W	mm (in.)	1,050 (41-5/16)		
		D	mm (in.)	330+20 (13+3/4)		
		H	mm (in.)	1,260 (49-5/8)		
	Weight		kg (lbs.)	122 (269)		
Refrigerant piping	Refrigerant			R407C		
		Charge	kg (lbs.)	4.6 (10.1)		
		Oil (Model)	L	1.690 (Ester) MMMA-POE		
	Pipe size O.D.	Liquid	mm (in.)	9.52 (3/8)		
		Gas	mm (in.)	19.05 (3/4)		
	Connection method	Indoor side		Flared		
		Outdoor side		Flared		
	Between the indoor & outdoor units	Height difference		Max. 50m		
		Piping length		Max. 50m		

NOTE:

1. Rating conditions (ISO T1)
   Cooling : Indoor : D.B. 27℃ (80˚F), W.B. 19℃ (66˚F) Outdoor : D.B. 35℃ (95˚F), W.B. 24℃ (75˚F)
   Heating : Indoor : D.B. 20℃ (68˚F) Outdoor : D.B. 7℃ (45˚F), W.B. 6℃ (43˚F)
   Refrigerant piping length (one way) : 5m (16ft)
2. Guaranteed operating range

		Indoor	Outdoor
Cooling	Upper limit	D.B. 35℃, W.B. 22.5℃	D.B. 46℃
	Lower limit	D.B. 19℃, W.B. 15℃	D.B. -5℃
Heating	Upper limit	D.B. 28℃	D.B. 24℃, W.B. 18℃
	Lower limit	D.B. 17℃	D.B. -11℃, W.B. -12℃

※1 : [ ] Shows the total rating.
※2 : < > Shows the only booster heater rating.

3. Above data based on indicated voltage
   Indoor unit Single phase 240V 50Hz
   Outdoor unit 3 phases 415V 50Hz

Item			Model / With Electric heater	Without Electric heater		
					PLH-P6AAH	PLA-P6AA
Function					Cooling	Heating
Capacity ※1				Btu/h	48,000	58,300 [68,600]
				W	14,300	17,100 [20,100]
Total input ※1				kW	5.94	6.36 [9.36]
Indoor unit	Model name		With Electric heater	Without Electric heater	PLH-P6AAH	PLA-P6AA
	Power supply (phase, cycle,voltage)				Single phase, 50Hz, 220-230-240V	
		Input ※2		kW	0.34	0.34 <3.00>
		Running current ※2		A	1.64	1.64 <12.50>
		Starting current ※2		A	2.0	2.0 <12.50>
	External finish (Panel)				Munsell 0.70Y 8.59/0.97	
	Heat exchanger				Plate fin coil	
	Fan	Fan (drive) × No.			Turbo fan (direct) × 1	
		Fan motor output		kW	0.120	
		Air flow (Lo-Mi2-Mi1-Hi)		m³ / min (CFM)	22-25-28-30 (775-880-990-1,060)	
		External static pressure		Pa (mmAq)	0 (direct blow)	
	Booster heater ※2			kW	<3.0>	
	Operation control & Thermostat				Remote controller & built-in	
	Noise level (Lo-Mi2-Mi1-Hi)			dB	37-40-43-45	
	Unit drain pipe I.D.			mm (in.)	32 (1-1/4)	
	Dimensions	W		mm (in.)	UNIT : 840 (33-1/16)	PANEL : 950 (37-3/8)
		D		mm (in.)	UNIT : 840 (33-1/16)	PANEL : 950 (37-3/8)
		H		mm (in.)	UNIT : 298 (11-3/4)	PANEL : 30 (1-3/16)
	Weight	With electric heater		kg (lbs.)	UNIT : 34 (75)	PANEL : 5 (11)
		Without electric heater		kg (lbs.)	UNIT : 32 (71)	PANEL : 5 (11)
Outdoor unit	Model name				PUH-P6YGAA	
	Power supply (phase, cycle, voltage)				3 phases, 50Hz, 380-400-415V (4wires)	
		Input		kW	5.58	5.91
		Running current		A	9.03	9.56
		Starting current		A	74	
	External finish				Munsell 5Y 7/1	
	Refrigerant control				Linear expansion valve	
	Compressor				Hermetic	
		Model			ZR72KCE-TFD	
		Motor output		kW	4.2	
		Starter type			Line start	
		Protection devices			Internal thermostat, Thermal relay, HP switch, Discharge thermo.	
	Heat exchanger				Plate fin coil	
	Fan	Fan (drive) × No.			Propeller (direct) × 2	
		Fan motor output		kW	0.070+0.070	
		Air flow		m³ / min (CFM)	100 (3,530)	
	Crankcase heater			W	38	
	Defrost method				Reverse cycle	
	Noise level	Cooling		dB	57	
		Heating		dB	58	
	Dimensions	W		mm (in.)	1,050 (41-5/16)	
		D		mm (in.)	330+20(13+3/4)	
		H		mm (in.)	1,260 (49-5/8)	
	Weight			kg (lbs.)	122 (269)	
Refrigerant piping	Refrigerant				R407C	
		Charge		kg (lbs.)	4.9 (10.8)	
		Oil (Model)		L	1.774 (Ester) MMMA-POE	
	Pipe size O.D.	Liquid		mm (in.)	9.52 (3/8)	
		Gas		mm (in.)	19.05 (3/4)	
	Connection method	Indoor side			Flared	
		Outdoor side			Flared	
	Between the indoor & outdoor units	Height difference			Max. 50m	
		Piping length			Max. 50m	

NOTE:

1. Rating conditions (ISO T1)
   Cooling : Indoor : D.B. 27℃ (80˚F), W.B. 19℃ (66˚F) Outdoor : D.B. 35℃ (95˚F), W.B. 24℃ (75˚F)
   Heating : Indoor : D.B. 20℃ (68˚F) Outdoor : D.B. 7℃ (45˚F), W.B. 6℃ (43˚F)
   Refrigerant piping length (one way) : 5m (16ft)
2. Guaranteed operating range

		Indoor	Outdoor
Cooling	Upper limit	D.B. 35℃, W.B. 22.5℃	D.B. 46℃
	Lower limit	D.B. 19℃, W.B. 15℃	D.B. -5℃
Heating	Upper limit	D.B. 28℃	D.B. 24℃, W.B. 18℃
	Lower limit	D.B. 17℃	D.B. -11℃, W.B. -12℃

※1 : [ ] Shows the total rating.
※2 : < > Shows the only booster heater rating.

3. Above data based on indicated voltage
   Indoor unit Single phase 240V 50Hz
   Outdoor unit 3 phases 415V 50Hz

Item				Model / With Electric heater	Without Electric heater	
				PLH-P1.6KAH	PLA-P1.6KA	
Function				Cooling		Heating
Capacity ※1			Btu/h	15,000		17,100 [21,800]
			W	4,400		5,000 [6,400]
Total input ※1			kW	1.82		1.89 [3.29]
Indoor unit	Model name		With Electric heater	PLH-P1.6KAH		
			Without Electric heater	PLA-P1.6KA		
	Power supply (phase, cycle,voltage)			Single phase, 50Hz, 220-230-240V		
		Input ※2	kW	0.15		0.10 <1.40>
		Running current ※2	A	0.64		0.45 <5.83>
		Starting current ※2	A	0.70		0.50 <5.83>
	External finish (Panel)			Galvanized sheets with gray heat insulation		
	Heat exchanger			Plate fin coil		
	Fan	Fan (drive) × No.		Turbo fan (direct) × 1		
		Fan motor output	kW	0.030		
		Air flow (Lo-Mi2-Mi1-Hi)	m³ / min (CFM)	13-14-15-16 (459-494-530-565)		
		External static pressure	Pa (mmAq)	0 (direct blow)		
	Booster heater ※2		kW	<1.4>		
	Operation control & Thermostat			Remote controller & built-in		
	Noise level (Lo-Mi2-Mi1-Hi)		dB	32-34-35.5-37		
	Unit drain pipe I.D.		mm (in.)	32 (1-1/4)		
	Dimensions	W	mm (in.)	UNIT : 660 (26) PANEL : 760 (30)		
		D	mm (in.)	UNIT : 660 (26) PANEL : 760 (30)		
		H	mm (in.)	UNIT : 253 (10) PANEL : 30 (1-3/16)		
	Weight	With electric heater	kg (lbs.)	UNIT : 20 (44) PANEL : 3.7 (8)		
		Without electric heater	kg (lbs.)	UNIT : 19 (42) PANEL : 3.7 (8)		
Outdoor unit	Model name			PUH-P1.6VGAA / P1.6YGAA		
	Power supply (phase, cycle, voltage)			Single phase, 50Hz, 220-230-240V / 3 phases, 50Hz, 380-400-415V (4wires)		
		Input	kW	1.59		1.64
		Running current	A	7.36 / 2.49		7.59 / 2.56
		Starting current	A	36 / 20		
	External finish			Munsell 5Y 7/1		
	Refrigerant control			Linear expansion valve		
	Compressor			Hermetic		
		Model		RE277VHSMT / RE277YFKM		
		Motor output	kW	1.3		
		Starter type		Line start		
		Protection devices		Internal thermostat, HP switch, Discharge thermo. / Thermal relay, HP switch, Discharge thermo.		
	Heat exchanger			Plate fin coil		
	Fan	Fan (drive) × No.		Propeller (direct) × 1		
		Fan motor output	kW	0.070		
		Air flow	m³ / min (CFM)	45 (1,590)		
	Crankcase heater		W	30		
	Defrost method			Reverse cycle		
	Noise level	Cooling	dB	47		
		Heating	dB	49		
	Dimensions	W	mm (in.)	900 (35-7/16)		
		D	mm (in.)	330+20 (13+3/4)		
		H	mm (in.)	650 (25-5/8)		
	Weight		kg (lbs.)	55 (121)		
Refrigerant piping	Refrigerant			R407C		
		Charge	kg (lbs.)	2.5 (5.5)		
		Oil (Model)	L	0.57 (Ester) MEL56		
	Pipe size O.D.	Liquid	mm (in.)	9.52 (3/8)		
		Gas	mm (in.)	15.88 (5/8)		
	Connection method	Indoor side		Flared		
		Outdoor side		Flared		
	Between the indoor & outdoor units	Height difference		Max. 40m		
		Piping length		Max. 40m		

NOTE:

1. Rating conditions (ISO T1)
   Cooling : Indoor : D.B. 27˚C (80˚F), W.B. 19˚C (66˚F) Outdoor : D.B. 35˚C (95˚F), W.B. 24˚C (75˚F)
   Heating : Indoor : D.B. 20˚C (68˚F) Outdoor : D.B. 7˚C (45˚F), W.B. 6˚C (43˚F)
   Refrigerant piping length (one way) : 5m (16ft)
2. Guaranteed operating range

		Indoor	Outdoor
Cooling	Upper limit	D.B. 35˚C, W.B. 22.5˚C	D.B. 46˚C
	Lower limit	D.B. 19˚C, W.B. 15˚C	D.B. -5˚C
Heating	Upper limit	D.B. 28˚C	D.B. 24˚C, W.B. 18˚C
	Lower limit	D.B. 17˚C	D.B. -11˚C, W.B. -12˚C

※1 : [ ] Shows the total rating.
※2 : < > Shows the only booster heater rating.

3. Above data based on indicated voltage
   Indoor unit Single phase 240V 50Hz
   Outdoor unit Single phase 240V 50Hz / 3 phases 415V 50Hz

Item			Model / With Electric heater	Without Electric heater		
			PLH-P2KAH	PLA-P2KA		
Function					Cooling	Heating
Capacity ※1				Btu/h	18,000	20,300 [25,100]
				W	5,300	5,950 [7,350]
Total input ※1				kW	2.44	2.40 [3.80]
Indoor unit	Model name		With Electric heater	Without Electric heater	PLH-P2KAH	PLA-P2KA
	Power supply (phase, cycle,voltage)				Single phase, 50Hz, 220-230-240V	
		Input ※2		kW	0.14	0.10 <1.40>
		Running current ※2		A	0.65	0.45 <5.83>
		Starting current ※2		A	0.72	0.50 <5.83>
	External finish (Panel)				Galvanized sheets with gray heat insulation	
	Heat exchanger				Plate fin coil	
	Fan	Fan (drive) × No.			Turbo fan (direct) × 1	
		Fan motor output		kW	0.030	
		Air flow (Lo-Mi2-Mi1-Hi)		m³ / min (CFM)	13-14-15-16 (459-494-530-565)	
		External static pressure		Pa (mmAq)	0 (direct blow)	
	Booster heater ※2			kW	<1.4>	
	Operation control & Thermostat				Remote controller & built-in	
	Noise level (Lo-Mi2-Mi1-Hi)			dB	32-34-35.5-37	
	Unit drain pipe I.D.			mm (in.)	32 (1-1/4)	
	Dimensions	W		mm (in.)	UNIT : 660 (26) PANEL : 760 (30)	
		D		mm (in.)	UNIT : 660 (26) PANEL : 760 (30)	
		H		mm (in.)	UNIT : 253 (10) PANEL : 30 (1-3/16)	
	Weight	With electric heater		kg (lbs.)	UNIT : 20 (44) PANEL : 3.7 (8)	
		Without electric heater		kg (lbs.)	UNIT : 19 (42) PANEL : 3.7 (8)	
Outdoor unit	Model name				PUH-P2VGAA / P2YGAA	
	Power supply (phase, cycle, voltage)				Single phase, 50Hz, 220-230-240V / 3 phases, 50Hz, 380-400-415V (4wires)	
		Input		kW	2.29	2.36
		Running current		A	10.26 / 3.70	10.57 / 3.82
		Starting current		A	62 / 31	
	External finish				Munsell 5Y 7/1	
	Refrigerant control				Linear expansion valve	
	Compressor				Hermetic	
		Model			NE36VMJMT / NE36YEKMT	
		Motor output		kW	1.6	
		Starter type			Line start	
		Protection devices			Internal thermostat, HP switch, Discharge thermo. / Thermal relay, HP switch, Discharge thermo.	
	Heat exchanger				Plate fin coil	
	Fan	Fan (drive) × No.			Propeller (direct) × 1	
		Fan motor output		kW	0.070	
		Air flow		m³ / min (CFM)	55 (1,940)	
	Crankcase heater			W	38	
	Defrost method				Reverse cycle	
	Noise level	Cooling		dB	48	
		Heating		dB	49	
	Dimensions	W		mm (in.)	900 (35-7/16)	
		D		mm (in.)	330+20 (13+3/4)	
		H		mm (in.)	855 (33-5/8)	
	Weight			kg (lbs.)	71 (157)	
Refrigerant piping	Refrigerant				R407C	
		Charge		kg (lbs.)	2.6 (5.7)	
		Oil (Model)		L	1.2 (Ester) MEL56	
	Pipe size O.D.	Liquid		mm (in.)	9.52 (3/8)	
		Gas		mm (in.)	15.88 (5/8)	
	Connection method	Indoor side			Flared	
		Outdoor side			Flared	
	Between the indoor & outdoor units	Height difference			Max. 40m	
		Piping length			Max. 40m	

NOTE:

1. Rating conditions (ISO T1)
   Cooling : Indoor : D.B. 27℃ (80˚F), W.B. 19℃ (66˚F) Outdoor : D.B. 35℃ (95˚F), W.B. 24℃ (75˚F)
   Heating : Indoor : D.B. 20℃ (68˚F) Outdoor : D.B. 7℃ (45˚F), W.B. 6℃ (43˚F)
   Refrigerant piping length (one way) : 5m (16ft)
2. Guaranteed operating range

		Indoor	Outdoor
Cooling	Upper limit	D.B. 35˚C, W.B. 22.5˚C	D.B. 46˚C
	Lower limit	D.B. 19˚C, W.B. 15˚C	D.B. -5˚C
Heating	Upper limit	D.B. 28˚C	D.B. 24˚C, W.B. 18˚C
	Lower limit	D.B. 17˚C	D.B. -11˚C, W.B. -12˚C

※1 : [ ] Shows the total rating.
※2 : < > Shows the only booster heater rating.

3. Above data based on indicated voltage
   Indoor unit Single phase 240V 50Hz
   Outdoor unit Single phase 240V 50Hz / 3 phases 415V 50Hz

Item \ Model			With Electric heater / Without Electric heater	PLH-P2.5KAH / PLA-P2.5KA	
Function				Cooling	Heating
Capacity ※1			Btu/h	21,500	25,200 [32,400]
			W	6,300	7,400 [9,500]
Total input ※1			kW	2.63	2.57 [4.67]
Indoor unit	Model name		With Electric heater / Without Electric heater	PLH-P2.5KAH / PLA-P2.5KA	
	Power supply (phase, cycle,voltage)			Single phase, 50Hz, 220-230-240V	
	Fan	Input ※2	kW	0.14	0.10 <2.10>
		Running current ※2	A	0.61	0.45 <8.75>
		Starting current ※2	A	0.67	0.50 <8.75>
	External finish (Panel)			Galvanized sheets with gray heat insulation	
	Heat exchanger			Plate fin coil	
	Fan	Fan (drive) × No.		Turbo fan (direct) × 1	
		Fan motor output	kW	0.030	
		Air flow (Lo-Mi2-Mi1-Hi)	m³ / min (CFM)	14-15-16-17 (494-530-565-600)	
		External static pressure	Pa (mmAq)	0 (direct blow)	
	Booster heater ※2		kW	<2.1>	
	Operation control & Thermostat			Remote controller & built-in	
	Noise level (Lo-Mi2-Mi1-Hi)		dB	35-36.5-38-39.5	
	Unit drain pipe I.D.		mm (in.)	32 (1-1/4)	
	Dimensions	W	mm (in.)	UNIT : 660 (26) PANEL : 760 (30)	
		D	mm (in.)	UNIT : 660 (26) PANEL : 760 (30)	
		H	mm (in.)	UNIT : 253 (10) PANEL : 30 (1-3/16)	
	Weight	With electric heater	kg (lbs.)	UNIT : 21 (46) PANEL : 3.7 (8)	
		Without electric heater	kg (lbs.)	UNIT : 20 (44) PANEL : 3.7 (8)	
Outdoor unit	Model name			PUH-P2.5VGAA / P2.5YGAA	
	Power supply (phase, cycle, voltage)			Single phase, 50Hz, 220-230-240V / 3 phases, 50Hz, 380-400-415V (4wires)	
		Input	kW	2.77	2.68
		Running current	A	11.90 / 4.48	11.51 / 4.34
		Starting current	A	77 / 35	
	External finish			Munsell 5Y 7/1	
	Refrigerant control			Linear expansion valve	
	Compressor			Hermetic	
		Model		NE41VMJMT / NE41YEKMT	
		Motor output	kW	1.9	
		Starter type		Line start	
		Protection devices		Internal thermostat, HP switch, Discharge thermo. / Thermal relay, HP switch, Discharge thermo.	
	Heat exchanger			Plate fin coil	
	Fan	Fan (drive) × No.		Propeller (direct) × 1	
		Fan motor output	kW	0.070	
		Air flow	m³ / min (CFM)	50 (1,770)	
	Crankcase heater		W	38	
	Defrost method			Reverse cycle	
	Noise level	Cooling	dB	48	
		Heating	dB	50	
	Dimensions	W	mm (in.)	900 (35-7/16)	
		D	mm (in.)	330+20 (13+3/4)	
		H	mm (in.)	855 (33-5/8)	
	Weight		kg (lbs.)	82 (181)	
Refrigerant piping	Refrigerant			R407C	
		Charge	kg (lbs.)	3.1 (6.8)	
		Oil (Model)	L	1.2 (Ester) MEL56	
	Pipe size O.D.	Liquid	mm (in.)	9.52 (3/8)	
		Gas	mm (in.)	15.88 (5/8)	
	Connection method	Indoor side		Flared	
		Outdoor side		Flared	
	Between the indoor & outdoor units	Height difference		Max. 50m	
		Piping length		Max. 50m	

NOTE:

1. Rating conditions (ISO T1)
   Cooling : Indoor : D.B. 27℃ (80˚F), W.B. 19℃ (66˚F) Outdoor : D.B. 35℃ (95˚F), W.B. 24℃ (75˚F)
   Heating : Indoor : D.B. 20℃ (68˚F) Outdoor : D.B. 7℃ (45˚F), W.B. 6℃ (43˚F)
   Refrigerant piping length (one way) : 5m (16ft)
2. Guaranteed operating range

		Indoor	Outdoor
Cooling	Upper limit	D.B. 35˚C, W.B. 22.5˚C	D.B. 46˚C
	Lower limit	D.B. 19˚C, W.B. 15˚C	D.B. -5˚C
Heating	Upper limit	D.B. 28˚C	D.B. 24˚C, W.B. 18˚C
	Lower limit	D.B. 17˚C	D.B. -11˚C, W.B. -12˚C

※1 : [ ] Shows the total rating.
※2 : < > Shows the only booster heater rating.

3. Above data based on indicated voltage
   Indoor unit Single phase 240V 50Hz
   Outdoor unit Single phase 240V 50Hz / 3 phases 415V 50Hz

A.1.2.2 Cool Only (Refrigerant R407C)

Item				Model	PLA-P3AA	PLA-P4AA
Function					Cooling	
Capacity				Btu/h	26,600	33,100
				W	7,800	9,700
Total input				kW	3.44	3.69
Indoor unit	**Model name**				**PLA-P3AA**	**PLA-P4AA**
	Power supply (phase, cycle,voltage)				Single phase, 50Hz, 220-230-240V	
		Input		kW	0.17	0.26
		Running current		A	0.81	1.25
		Starting current		A	1.0	2.0
	External finish (Panel)				Munsell 0.70Y 8.59 / 0.97	
	Heat exchanger				Plate fin coil	
	Fan	Fan (drive) × No.			Turbo fan (direct) × 1	
		Fan motor output		kW	0.070	0.120
		Air flow (Lo-Mi2-Mi1-Hi)		m³ / min (CFM)	15-16-18-20 (530-565-635-705)	20-23-26-28 (705-810-920-990)
		External static pressure		Pa (mmAq)	0 (direct blow)	
	Booster heater			kW	—	
	Operation control & Thermostat				Remote controller & built-in	
	Noise level (Lo-Mi2-Mi1-Hi)			dB	28-30-32-34	33-36-39-41
	Unit drain pipe I.D.			mm (in.)	32 (1-1/4)	
	Dimensions		W	mm (in.)	UNIT : 840 (33-1/16), PANEL : 950 (37-3/8)	UNIT : 840 (33-1/16), PANEL : 950 (37-3/8)
			D	mm (in.)	UNIT : 840 (33-1/16), PANEL : 950 (37-3/8)	UNIT : 840 (33-1/16), PANEL : 950 (37-3/8)
			H	mm (in.)	UNIT : 258 (10-1/2), PANEL : 30 (1-3/16)	UNIT : 298 (11-3/4), PANEL : 30 (1-3/16)
	Weight			kg (lbs.)	UNIT : 24 (53), PANEL : 5 (11)	UNIT : 30 (66), PANEL : 5 (11)
Outdoor unit	**Model name**				**PU-P3VGAA / P3YGAA**	**PU-P4VGAA / P4YGAA**
	Power supply (phase, cycle, voltage)				Single phase, 50Hz, 220-230-240V / 3 phases, 50Hz, 380-400-415V (4wires)	
		Input		kW	3.27	3.43
		Running current		A	14.81 / 5.29	15.71 / 5.55
		Starting current		A	93 / 47	99 / 49
	External finish				Munsell 5Y 7/1	
	Refrigerant control				Linear expansion valve	
	Compressor				Hermetic	
		Model			NE52VNJMT / NE52YDKMT	NE56VNJMT / NE56YDKMT
		Motor output		kW	2.5	2.7
		Starter type			Line start	
		Protection devices			Internal thermostat, HP switch, Discharge thermo. / Thermal relay, HP switch, Discharge thermo.	
	Heat exchanger				Plate fin coil	
	Fan	Fan (drive) × No.			Propeller (direct) × 1	Propeller (direct) × 2
		Fan motor output		kW	0.070	0.070+0.070
		Air flow		m³ / min (CFM)	50 (1,770)	85 (3,000)
	Crankcase heater			W	38	
	Defrost method				—	
	Noise level		Coling	dB	49	51
	Dimensions		W	mm (in.)	900 (35-7/16)	
			D	mm (in.)	330+20 (13+3/4)	
			H	mm (in.)	855 (33-5/8)	1,260 (49-5/8)
	Weight			kg (lbs.)	82 (181)	96 (212)
Refrigerant piping	Refrigerant				R407C	
		Charge		kg (lbs.)	3.3 (7.3)	4.0 (8.8)
		Oil (Model)		L	1.3 (Ester) MEL56	
	Pipe size O.D.		Liquid	mm (in.)	9.52 (3/8)	
			Gas	mm (in.)	15.88 (5/8)	19.05 (3/4)
	Connection method		Indoor side		Flared	
			Outdoor side		Flared	
	Between the indoor & outdoor units		Height difference		Max. 50m	
			Piping length		Max. 50m	

NOTE:

1. Rating conditions (ISO T1)
   Cooling : Indoor : D.B. 27℃ (80˚F), W.B. 19℃ (66˚F) Outdoor : D.B. 35℃ (95˚F), W.B. 24℃ (75˚F)
   Refrigerant piping length (one way) : 5m (16ft)
2. Guaranteed operating range

		Indoor	Outdoor
Cooling	Upper limit	D.B. 35˚C, W.B. 22.5˚C	D.B. 46˚C
	Lower limit	D.B. 19˚C, W.B. 15˚C	D.B. -5˚C

3. Above data based on indicated voltage
   Indoor unit Single phase 240V 50Hz
   Outdoor unit Single phase 240V 50Hz / 3 phases 415V 50Hz

Item \ Model				PLA-P5AA	PLA-P6AA
Function				Cooling	
Capacity			Btu/h	43,700	48,000
			W	12,800	14,300
Total input			kW	5.00	5.94
Indoor unit	**Model name**			**PLA-P5AA**	**PLA-P6AA**
	Power supply (phase, cycle,voltage)			Single phase, 50Hz, 220-230-240V	
		Input	kW	0.30	0.34
		Running current	A	1.43	1.64
		Starting current	A	2.0	2.0
	External finish (Panel)			Munsell 0.70Y 8.59/0.97	
	Heat exchanger			Plate fin coil	
	Fan	Fan (drive) × No.		Turbo fan (direct) × 1	
		Fan motor output	kW	0.120	
		Air flow (Lo-Mi2-Mi1-Hi)	m³ / min (CFM)	22-25-28-30 (775-880-990-1,060)	
		External static pressure	Pa (mmAq)	0 (direct blow)	
	Booster heater		kW	—	
	Operation control & Thermostat			Remote controller & built-in	
	Noise level (Lo-Mi2-Mi1-Hi)		dB	35-38-41-43	37-40-43-45
	Unit drain pipe I.D.		mm (in.)	32 (1-1/4)	
	Dimensions	W	mm (in.)	UNIT : 840 (33-1/16), PANEL : 950 (37-3/8)	
		D	mm (in.)	UNIT : 840 (33-1/16), PANEL : 950 (37-3/8)	
		H	mm (in.)	UNIT : 298 (11-3/4), PANEL : 30 (1-3/16)	
	Weight		kg (lbs.)	UNIT : 30 (66), PANEL : 5 (11)	UNIT : 32 (71), PANEL 5 (11)
Outdoor unit	**Model name**			**PU-P5YGAA**	**PU-P6YGAA**
	Power supply (phase, cycle, voltage)			3 phases, 50Hz, 380-400-415V (4wires)	
		Input	kW	4.70	5.58
		Running current	A	7.60	9.03
		Starting current	A	65.5	74
	External finish			Munsell 5Y 7/1	
	Refrigerant control			Linear expansion valve	
	Compressor			Hermetic	
		Model		ZR61KCE-TFD	ZR72KCE-TFD
		Motor output	kW	3.5	4.2
		Starter type		Line start	
		Protection devices		Internal thermostat, Thermal relay, HP switch, Discharge thermo.	
	Heat exchanger			Plate fin coil	
	Fan	Fan (drive) × No.		Propeller (direct) × 2	
		Fan motor output	kW	0.070+0.070	
		Air flow	m³ / min (CFM)	95 (3,360)	100 (3,530)
	Crankcase heater		W	38	
	Defrost method			—	
	Noise level	Coling	dB	55	57
	Dimensions	W	mm (in.)	1,050 (41-5/16)	
		D	mm (in.)	330+20 (13+3/4)	
		H	mm (in.)	1,260 (49-5/8)	
	Weight		kg (lbs.)	122 (269)	
Refrigerant piping	Refrigerant			R407C	
		Charge	kg (lbs.)	4.6 (10.1)	4.9 (10.8)
		Oil (Model)	L	1.690 MMMA-POE	1.774 MMMA-POE
	Pipe size O.D.	Liquid	mm (in.)	9.52 (3/8)	
		Gas	mm (in.)	19.05 (3/4)	
	Connection method	Indoor side		Flared	
		Outdoor side		Flared	
	Between the indoor & outdoor units	Height difference		Max. 50m	
		Piping length		Max. 50m	

NOTE:

1. Rating conditions (ISO T1)
   Cooling : Indoor : D.B. 27℃ (80˚F), W.B. 19℃ (66˚F) Outdoor : D.B. 35℃ (95˚F), W.B. 24℃ (75˚F)
   Refrigerant piping length (one way) : 5m (16ft)
2. Guaranteed operating range

		Indoor	Outdoor
Cooling	Upper limit	D.B. 35˚C, W.B. 22.5˚C	D.B. 46˚C
	Lower limit	D.B. 19˚C, W.B. 15˚C	D.B. -5˚C

3. Above data based on indicated voltage
   Indoor unit Single phase 240V 50Hz
   Outdoor unit 3 phases 415V 50Hz

Item				Model	PLA-P1.6KA	PLA-P2KA
Function					Cooling	
Capacity				Btu/h	15,000	18,000
				W	4,400	5,300
Total input				kW	1.82	2.44
Indoor unit	**Model name**				**PLA-P1.6KA**	**PLA-P2KA**
	Power supply (phase, cycle,voltage)				Single phase, 50Hz, 220-230-240V	
		Input		kW	0.15	0.14
		Running current		A	0.64	0.65
		Starting current		A	0.70	0.72
	External finish (Panel)				Galvanized sheets with gray heat insulation	
	Heat exchanger				Plate fin coil	
	Fan	Fan (drive) × No.			Turbo fan (direct) × 1	
		Fan motor output		kW	0.030	
		Air flow (Lo-Mi2-Mi1-Hi)		m³ / min (CFM)	13-14-15-16(459-494-530-565)	
		External static pressure		Pa (mmAq)	0 (direct blow)	
	Booster heater			kW	—	
	Operation control & Thermostat				Remote controller & built-in	
	Noise level (Lo-Mi2-Mi1-Hi)			dB	32-34-35.5-37	
	Unit drain pipe I.D.			mm (in.)	32 (1-1/4)	
	Dimensions		W	mm (in.)	UNIT : 660 (26), PANEL : 760 (30)	
			D	mm (in.)	UNIT : 660 (26), PANEL : 760 (30)	
			H	mm (in.)	UNIT : 253 (10), PANEL : 30 (1-3/16)	
	Weight			kg (lbs.)	UNIT : 19 (42), PANEL : 3.7 (8)	
Outdoor unit	**Model name**				**PU-P1.6VGAA / P1.6YGAA**	**PU-P2VGAA /P2 YGAA**
	Power supply (phase, cycle, voltage)				Single phase, 50Hz, 220-230-240V / 3 phases, 50Hz, 380-400-415V (4wires)	
		Input		kW	1.59	2.29
		Running current		A	7.36 / 2.49	10.26 / 3.70
		Starting current		A	36 / 20	62 / 31
	External finish				Munsell 5Y 7/1	
	Refrigerant control				Linear expansion valve	
	Compressor				Hermetic	
		Model			RE277VHSMT / RE277YFKM	NE36VMJMT / NE36YEKMT
		Motor output		kW	1.3	1.6
		Starter type			Line start	
		Protection devices			Internal thermostat, HP switch,Discharge thermo. / Thermal relay, HP switch, Discharge thermo.	
	Heat exchanger				Plate fin coil	
	Fan	Fan (drive) × No.			Propeller (direct) × 1	
		Fan motor output		kW	0.070	
		Air flow		m³ / min (CFM)	45 (1,590)	55 (1,940)
	Crankcase heater			W	30	38
	Defrost method				—	
	Noise level		Cooling	dB	47	48
	Dimensions		W	mm (in.)	900 (35-7/16)	
			D	mm (in.)	330+20 (13+3/4)	
			H	mm (in.)	650 (25-5/8)	855 (33-5/8)
	Weight			kg (lbs.)	55 (121)	71 (157)
Refrigerant piping	Refrigerant				R407C	
		Charge		kg (lbs.)	2.5 (5.5)	2.6 (5.7)
		Oil (Model)		L	0.57 (Ester) MEL56	1.2 (Ester) MEL56
	Pipe size O.D.		Liquid	mm (in.)	9.52 (3/8)	
			Gas	mm (in.)	15.88 (5/8)	
	Connection method		Indoor side		Flared	
			Outdoor side		Flared	
	Between the indoor & outdoor units		Height difference		Max. 40m	
			Piping length		Max. 40m	

NOTE:

1. Rating conditions (ISO T1)
   Cooling : Indoor : D.B. 27℃ (80˚F), W.B. 19℃ (66˚F) Outdoor : D.B. 35℃ (95˚F), W.B. 24℃ (75˚F)
   Refrigerant piping length (one way) : 5m (16ft)
2. Guaranteed operating range

		Indoor	Outdoor
Cooling	Upper limit	D.B. 35˚C, W.B. 22.5˚C	D.B. 46˚C
	Lower limit	D.B. 19˚C, W.B. 15˚C	D.B. -5˚C

3. Above data based on indicated voltage
   Indoor unit Single phase 240V 50Hz
   Outdoor unit Single phase 240V 50Hz / 3 phases 415V 50Hz

Item \ Model				PLA-P2.5KA
Function				Cooling
Capacity			Btu/h	21,500
			W	6,300
Total input			kW	2.63
Indoor unit	**Model name**			**PLA-P2.5KA**
	Power supply (phase, cycle,voltage)			Single phase, 50Hz, 220-230-240V
		Input	kW	0.14
		Running current	A	0.61
		Starting current	A	0.67
	External finish (Panel)			Galvanized sheets with gray heat insulation
	Heat exchanger			Plate fin coil
	Fan	Fan (drive) × No.		Turbo fan (direct) × 1
		Fan motor output	kW	0.030
		Air flow (Lo-Mi2-Mi1-Hi)	m³ / min (CFM)	14-15-16-17 (494-530-565-600)
		External static pressure	Pa (mmAq)	0 (direct blow)
	Booster heater		kW	—
	Operation control & Thermostat			Remote controller & built-in
	Noise level (Lo-Mi2-Mi1-Hi)		dB	35-36.5-38-39.5
	Unit drain pipe I.D.		mm (in.)	32 (1-1/4)
	Dimensions	W	mm (in.)	UNIT : 660 (26), PANEL : 760 (30)
		D	mm (in.)	UNIT : 660 (26), PANEL : 760 (30)
		H	mm (in.)	UNIT : 253 (10), PANEL : 30 (1-3/16)
	Weight		kg (lbs.)	UNIT : 20 (44), PANEL : 3.7 (8)
Outdoor unit	**Model name**			**PU-P2.5VGAA / P2.5YGAA**
	Power supply (phase, cycle, voltage)			Single phase, 50Hz, 220-230-240V / 3 phases, 50Hz, 380-400-415V (4wires)
		Input	kW	2.77
		Running current	A	11.90 / 4.48
		Starting current	A	77 / 35
	External finish			Munsell 5Y 7/1
	Refrigerant control			Linear expansion valve
	Compressor			Hermetic
		Model		NE41VMJMT / NE41YEKMT
		Motor output	kW	1.9
		Starter type		Line start
		Protection devices		Internal thermostat, HP switch,Discharge thermo. / Thermal relay, HP switch, Discharge thermo.
	Heat exchanger			Plate fin coil
	Fan	Fan (drive) × No.		Propeller (direct) × 1
		Fan motor output	kW	0.070
		Air flow	m³ / min (CFM)	50 (1,770)
	Crankcase heater		W	38
	Defrost method			—
	Noise level	Cooling	dB	48
	Dimensions	W	mm (in.)	900 (35-7/16)
		D	mm (in.)	330+20 (13+3/4)
		H	mm (in.)	855 (33-5/8)
	Weight		kg (lbs.)	82 (181)
Refrigerant piping	Refrigerant			R407C
		Charge	kg (lbs.)	3.1 (6.8)
		Oil (Model)	L	1.2 (Ester) MEL56
	Pipe size O.D.	Liquid	mm (in.)	9.52 (3/8)
		Gas	mm (in.)	15.88 (5/8)
	Connection method	Indoor side		Flared
		Outdoor side		Flared
	Between the indoor & outdoor units	Height difference		Max. 50m
		Piping length		Max. 50m

NOTE:

1. Rating conditions (ISO T1)
   Cooling : Indoor : D.B. 27℃ (80˚F), W.B. 19℃ (66˚F) Outdoor : D.B. 35℃ (95˚F), W.B. 24℃ (75˚F)
   Refrigerant piping length (one way) : 5m (16ft)
2. Guaranteed operating range

		Indoor	Outdoor
Cooling	Upper limit	D.B. 35˚C, W.B. 22.5˚C	D.B. 46˚C
	Lower limit	D.B. 19˚C, W.B. 15˚C	D.B. -5˚C

3. Above data based on indicated voltage
   Indoor unit Single phase 240V 50Hz
   Outdoor unit Single phase 240V 50Hz / 3 phases 415V 50Hz

A.1.3 ELECTRICAL DATA

A.1.3.1 Heat Pump (Refrigerant R407C)

Indoor unit ..... 220V 50Hz Single phase Outdoor unit .... 220V 50Hz Single phase / 380V 50Hz 3 phases

Model	Indoor unit	With heater	PLH-P3AAH				PLH-P4AAH			
		Without heater	PLA-P3AA				PLA-P4AA			
	Outdoor unit		PUH-P3VGAA		PUH-P3YGAA		PUH-P4VGAA		PUH-P4YGAA	
Mode			Cool	Heat	Cool	Heat	Cool	Heat	Cool	Heat
Capacity (W)			7,600	9,100 (10,860)	7,600	9,100 (10,860)	9,500	10,400 (12,160)	9,500	10,400 (12,160)
Total Input (kW)	(In + Out) (In + Out + Heater)		3.40	3.47 (5.23)	3.40	3.47 (5.23)	3.66	3.88 (5.64)	3.66	3.88 (5.64)
Indoor unit	Input (kW)		0.15	0.15 <1.76>	0.15	0.15 <1.76>	0.24	0.24 <2.18>	0.24	0.24 <2.18>
Indoor unit	Current (A)		0.78	0.78 <8.00>	0.78	0.78 <8.00>	1.25	1.25 <9.91>	1.25	1.25 <9.91>
Outdoor unit	Starting current (A)		85	85	43	43	91	91	44	44
Outdoor unit	Current (A)		16.16	17.19	5.78	6.15	17.13	18.08	6.06	6.40

※ ( ) shows the total rating. < > shows the only booster heater rating.

Indoor unit ..... 230V 50Hz Single phase Outdoor unit .... 230V 50Hz Single phase / 400V 50Hz 3 phases

Model	Indoor unit	With heater	PLH-P3AAH				PLH-P4AAH			
		Without heater	PLA-P3AA				PLA-P4AA			
	Outdoor unit		PUH-P3VGAA		PUH-P3YGAA		PUH-P4VGAA		PUH-P4YGAA	
Mode			Cool	Heat	Cool	Heat	Cool	Heat	Cool	Heat
Capacity (W)			7,700	9,200 (11,130)	7,700	9,200 (11,130)	9,600	10,500 (12,430)	9,600	10,500 (12,430)
Total Input (kW)	(In + Out) (In + Out + Heater)		3.42	3.48 (5.41)	3.42	3.48 (5.41)	3.68	3.91 (5.84)	3.68	3.91 (5.84)
Indoor unit	Input (kW)		0.16	0.16 <1.93>	0.16	0.16 <1.93>	0.25	0.25 <2.39>	0.25	0.25 <2.39>
Indoor unit	Current (A)		0.79	0.79 <8.39>	0.79	0.79 <8.39>	1.25	1.25 <10.39>	1.25	1.25 <10.39>
Outdoor unit	Starting current (A)		89	89	45	45	95	95	47	47
Outdoor unit	Current (A)		15.45	16.45	5.49	5.84	16.39	17.30	5.76	6.08

※ ( ) shows the total rating. < > shows the only booster heater rating.

Indoor unit ..... 240V 50Hz Single phase Outdoor unit .... 240V 50Hz Single phase / 415V 50Hz 3 phases

Model	Indoor unit	With heater	PLH-P3AAH				PLH-P4AAH			
		Without heater	PLA-P3AA				PLA-P4AA			
	Outdoor unit		PUH-P3VGAA		PUH-P3YGAA		PUH-P4VGAA		PUH-P4YGAA	
Mode			Cool	Heat	Cool	Heat	Cool	Heat	Cool	Heat
Capacity (W)			7,800	9,300 (11,400)	7,800	9,300 (11,400)	9,700	10,600 (12,700)	9,700	10,600 (12,700)
Total Input (kW)	(In + Out) (In + Out + Heater)		3.44	3.50 (5.60)	3.44	3.50 (5.60)	3.69	3.93 (6.03)	3.69	3.93 (6.03)
Indoor unit	Input (kW)		0.17	0.17 <2.10>	0.17	0.17 <2.10>	0.26	0.26 <2.60>	0.26	0.26 <2.60>
Indoor unit	Current (A)		0.81	0.81 <8.75>	0.81	0.81 <8.75>	1.25	1.25 <10.83>	1.25	1.25 <10.83>
Outdoor unit	Starting current (A)		93	93	47	47	99	99	49	49
Outdoor unit	Current (A)		14.81	15.76	5.29	5.63	15.71	16.58	5.55	5.86

※ ( ) shows the total rating. < > shows the only booster heater rating.

Indoor unit ..... 220V 50Hz Single phase Outdoor unit .... 380V 50Hz 3 phases

Model		Indoor unit	With heater	PLH-P5AAH		PLH-P6AAH	
			Without heater	PLA-P5AA		PLA-P6AA	
		Outdoor unit		PUH-P5YGAA		PUH-P6YGAA	
Mode				Cool	Heat	Cool	Heat
Capacity (W)				12,600	14,700 (17,210)	14,100	16,900 (19,420)
Total Input (kW)		(In + Out) (In + Out + Heater)		4.96	5.30 (7.82)	5.85	6.33 (8.85)
Indoor unit	Input (kW)			0.28	0.28 <2.52>	0.32	0.32 <2.52>
Indoor unit	Current (A)			1.43	1.43 <11.45>	1.64	1.64 <11.45>
Outdoor unit	Starting current (A)			65.5	65.5	74	74
Outdoor unit	Current (A)			8.30	8.90	9.86	10.44

※ ( ) shows the total rating. < > shows the only booster heater rating.

Indoor unit ..... 230V 50Hz Single phase Outdoor unit .... 400V 50Hz 3 phases

Model		Indoor unit	With heater	PLH-P5AAH		PLH-P6AAH	
			Without heater	PLA-P5AA		PLA-P6AA	
		Outdoor unit		PUH-P5YGAA		PUH-P6YGAA	
Mode				Cool	Heat	Cool	Heat
Capacity (W)				12,700	14,800 (17,560)	14,200	17,000 (19,760)
Total Input (kW)		(In + Out) (In + Out + Heater)		4.98	5.32 (8.08)	5.90	6.35 (9.11)
Indoor unit	Input (kW)			0.29	0.29 <2.76>	0.33	0.33 <2.76>
Indoor unit	Current (A)			1.43	1.43 <12.00>	1.64	1.64 <12.00>
Outdoor unit	Starting current (A)			65.5	65.5	74	74
Outdoor unit	Current (A)			7.89	8.46	9.37	9.92

※ ( ) shows the total rating. < > shows the only booster heater rating.

Indoor unit ..... 240V 50Hz Single phase Outdoor unit .... 415V 50Hz 3 phases

Model		Indoor unit	With heater	PLH-P5AAH		PLH-P6AAH	
			Without heater	PLA-P5AA		PLA-P6AA	
		Outdoor unit		PUH-P5YGAA		PUH-P6YGAA	
Mode				Cool	Heat	Cool	Heat
Capacity (W)				12,800	14,900 (17,900)	14,300	17,100 (20,100)
Total Input (kW)		(In + Out) (In + Out + Heater)		5.00	5.34 (8.34)	5.94	6.36 (9.36)
Indoor unit	Input (kW)			0.30	0.30 <3.00>	0.34	0.34 <3.00>
Indoor unit	Current (A)			1.43	1.43 <12.50>	1.64	1.64 <12.50>
Outdoor unit	Starting current (A)			65.5	65.5	74	74
Outdoor unit	Current (A)			7.60	8.15	9.03	9.56

※ ( ) shows the total rating. < > shows the only booster heater rating.

Indoor unit ..... 220V 50Hz Single phase Outdoor unit .... 220V 50Hz Single phase / 380V 50Hz 3 phases

Model	Indoor unit	With heater	PLH-P1.6KAH				PLH-P2KAH				PLH-P2.5KAH			
		Without heater	PLA-P1.6KA				PLA-P2KA				PLA-P2.5KA			
	Outdoor unit		PUH-P1.6VGAA		PUH-P1.6YGAA		PUH-P2VGAA		PUH-P2YGAA		PUH-P2.5VGAA		PUH-P2.5YGAA	
Mode			Cool	Heat	Cool	Heat	Cool	Heat	Cool	Heat	Cool	Heat	Cool	Heat
Capacity (W)			4,300	4,900 (6,070)	4,300	4,900 (6,070)	5,200	5,850 (7,020)	5,200	5,850 (7,020)	6,200	7,100 (8,860)	6,200	7,100 (8,860)
Total Input (kW)	(In + Out) (In + Out + Heater)		1.70	1.74 (2.91)	1.70	1.74 (2.91)	2.34	2.30 (3.47)	2.34	2.30 (3.47)	2.57	2.48 (4.24)	2.57	2.48 (4.24)
Indoor unit	Input (kW)		0.12	0.08 <1.17>	0.12	0.08 <1.17>	0.12	0.08 <1.17>	0.12	0.08 <1.17>	0.12	0.09 <1.76>	0.12	0.09 <1.76>
Indoor unit	Current (A)		0.60	0.41 <5.32>	0.60	0.41 <5.32>	0.61	0.42 <5.32>	0.61	0.42 <5.32>	0.57	0.42 <8.00>	0.57	0.42 <8.00>
Outdoor unit	Starting current (A)		33	33	18	18	62	62	31	31	71	71	32	32
Outdoor unit	Current (A)		8.03	8.28	2.71	2.80	11.19	11.53	4.05	4.17	12.98	12.56	4.89	4.73

※ ( ) shows the total rating. < > shows the only booster heater rating.

Indoor unit ..... 230V 50Hz Single phase Outdoor unit .... 230V 50Hz Single phase / 400V 50Hz 3 phases

Model	Indoor unit	With heater	PLH-P1.6KAH				PLH-P2KAH				PLH-P2.5KAH			
		Without heater	PLA-P1.6KA				PLA-P2KA				PLA-P2.5KA			
	Outdoor unit		PUH-P1.6VGAA		PUH-P1.6YGAA		PUH-P2VGAA		PUH-P2YGAA		PUH-P2.5VGAA		PUH-P2.5YGAA	
Mode			Cool	Heat	Cool	Heat	Cool	Heat	Cool	Heat	Cool	Heat	Cool	Heat
Capacity (W)			4,350	4,950 (6,240)	4,350	4,950 (6,240)	5,250	5,900 (7,190)	5,250	5,900 (7,190)	6,250	7,250 (9,180)	6,250	7,250 (9,180)
Total Input (kW)	(In + Out) (In + Out + Heater)		1.77	1.81 (3.10)	1.77	1.81 (3.10)	2.38	2.36 (3.65)	2.38	2.36 (3.65)	2.59	2.52 (4.45)	2.59	2.52 (4.45)
Indoor unit	Input (kW)		0.14	0.09 <1.29>	0.14	0.09 <1.29>	0.13	0.09 <1.29>	0.13	0.09 <1.29>	0.13	0.09 <1.93>	0.13	0.09 <1.93>
Indoor unit	Current (A)		0.62	0.43 <5.61>	0.62	0.43 <5.61>	0.63	0.44 <5.61>	0.63	0.44 <5.61>	0.59	0.43 <8.39>	0.59	0.43 <8.39>
Outdoor unit	Starting current (A)		35	35	19	19	62	62	31	31	74	74	34	34
Outdoor unit	Current (A)		7.68	7.92	2.58	2.66	10.71	11.03	3.84	3.96	12.42	12.01	4.65	4.50

※ ( ) shows the total rating. < > shows the only booster heater rating.

Indoor unit ..... 240V 50Hz Single phase Outdoor unit .... 240V 50Hz Single phase / 415V 50Hz 3 phases

Model	Indoor unit	With heater	PLH-P1.6KAH				PLH-P2KAH				PLH-P2.5KAH			
		Without heater	PLA-P1.6KA				PLA-P2KA				PLA-P2.5KA			
	Outdoor unit		PUH-P1.6VGAA		PUH-P1.6YGAA		PUH-P2VGAA		PUH-P2YGAA		PUH-P2.5VGAA		PUH-P2.5YGAA	
Mode			Cool	Heat	Cool	Heat	Cool	Heat	Cool	Heat	Cool	Heat	Cool	Heat
Capacity (W)			4,400	5,000 (6,400)	4,400	5,000 (6,400)	5,300	5,950 (7,350)	5,300	5,950 (7,350)	6,300	7,400 (9,500)	6,300	7,400 (9,500)
Total Input (kW)	(In + Out) (In + Out + Heater)		1.82	1.89 (3.29)	1.82	1.89 (3.29)	2.44	2.40 (3.80)	2.44	2.40 (3.80)	2.63	2.57 (4.67)	2.63	2.57 (4.67)
Indoor unit	Input (kW)		0.15	0.10 <1.40>	0.15	0.10 <1.40>	0.14	0.10 <1.40>	0.14	0.10 <1.40>	0.14	0.10 <2.10>	0.14	0.10 <2.10>
Indoor unit	Current (A)		0.64	0.45 <5.83>	0.64	0.45 <5.83>	0.65	0.45 <5.83>	0.65	0.45 <5.83>	0.61	0.45 <8.75>	0.61	0.45 <8.75>
Outdoor unit	Starting current (A)		36	36	20	20	62	62	31	31	77	77	35	35
Outdoor unit	Current (A)		7.36	7.59	2.49	2.56	10.26	10.57	3.70	3.82	11.90	11.51	4.48	4.34

※ ( ) shows the total rating. < > shows the only booster heater rating.

A.1.3.2 Cool Only (Referigerant R407C)

Indoor unit ..... 220V 50Hz Single phase Outdoor unit .... 220V 50Hz Single phase / 380V 50Hz 3 phases

Model		Indoor unit	PLA-P3AA		PLA-P4AA		PLA-P5AA	PLA-P6AA
		Outdoor unit	PU-P3VGAA	PU-P3YGAA	PU-P4VGAA	PU-P4YGAA	PU-P5YGAA	PU-P6YGAA
Mode			Cool	Cool	Cool	Cool	Cool	Cool
Capacity (W)			7,600	7,600	9,500	9,500	12,600	14,100
Total Input (kW)	(In + Out) (In + Out + Heater)		3.40	3.40	3.66	3.66	4.96	5.85
Indoor unit	Input (kW)		0.15	0.15	0.24	0.24	0.28	0.32
Indoor unit	Current (A)		0.78	0.78	1.25	1.25	1.43	1.64
Outdoor unit	Starting current (A)		85	43	91	44	65.5	74
Outdoor unit	Current (A)		16.16	5.78	17.13	6.06	8.30	9.86

Indoor unit ..... 230V 50Hz Single phase Outdoor unit .... 230V 50Hz Single phase / 400V 50Hz 3 phases

Model		Indoor unit	PLA-P3AA		PLA-P4AA		PLA-P5AA	PLA-P6AA
		Outdoor unit	PU-P3VGAA	PU-P3YGAA	PU-P4VGAA	PU-P4YGAA	PU-P5YGAA	PU-P6YGAA
Mode			Cool	Cool	Cool	Cool	Cool	Cool
Capacity (W)			7,700	7,700	9,600	9,600	12,700	14,200
Total Input (kW)	(In + Out) (In + Out + Heater)		3.42	3.42	3.68	3.68	4.98	5.90
Indoor unit	Input (kW)		0.16	0.16	0.25	0.25	0.29	0.33
Indoor unit	Current (A)		0.79	0.79	1.25	1.25	1.43	1.64
Outdoor unit	Starting current (A)		89	45	95	47	65.5	74
Outdoor unit	Current (A)		15.45	5.49	16.39	5.76	7.89	9.37

Indoor unit ..... 240V 50Hz Single phase Outdoor unit .... 240V 50Hz Single phase / 415V 50Hz 3 phases

Model		Indoor unit	PLA-P3AA		PLA-P4AA		PLA-P5AA	PLA-P6AA
		Outdoor unit	PU-P3VGAA	PU-P3YGAA	PU-P4VGAA	PU-P4YGAA	PU-P5YGAA	PU-P6YGAA
Mode			Cool	Cool	Cool	Cool	Cool	Cool
Capacity (W)			7,800	7,800	9,700	9,700	12,800	14,300
Total Input (kW)	(In + Out) (In + Out + Heater)		3.44	3.44	3.69	3.69	5.00	5.94
Indoor unit	Input (kW)		0.17	0.17	0.26	0.26	0.30	0.34
Indoor unit	Current (A)		0.81	0.81	1.25	1.25	1.43	1.64
Outdoor unit	Starting current (A)		93	47	99	49	65.5	74
Outdoor unit	Current (A)		14.81	5.29	15.71	5.55	7.60	9.03

Indoor unit ..... 220V 50Hz Single phase Outdoor unit .... 220V 50Hz Single phase / 380V 50Hz 3 phases

Model		Indoor unit	PLA-P1.6KA		PLA-P2KA		PLA-P2.5KA	
		Outdoor unit	PU-P1.6VGAA	PU-P1.6YGAA	PU-P2VGAA	PU-P2YGAA	PU-P2.5VGAA	PU-P2.5YGAA
Mode			Cool	Cool	Cool	Cool	Cool	Cool
Capacity (W)			4,300	4,300	5,200	5,200	6,200	6,200
Total Input (kW)	(In + Out) (In + Out + Heater)		1.70	1.70	2.34	2.34	2.57	2.57
Indoor unit	Input (kW)		0.12	0.12	0.12	0.12	0.12	0.12
Indoor unit	Current (A)		0.60	0.60	0.61	0.61	0.57	0.57
Outdoor unit	Starting current (A)		33	18	62	31	71	32
Outdoor unit	Current (A)		8.03	2.71	11.19	4.05	12.98	4.89

Indoor unit ..... 230V 50Hz Single phase Outdoor unit .... 230V 50Hz Single phase / 400V 50Hz 3 phases

Model		Indoor unit	PLA-P1.6KA		PLA-P2KA		PLA-P2.5KA	
		Outdoor unit	PU-P1.6VGAA	PU-P1.6YGAA	PU-P2VGAA	PU-P2YGAA	PU-P2.5VGAA	PU-P2.5YGAA
Mode			Cool	Cool	Cool	Cool	Cool	Cool
Capacity (W)			4,350	4,350	5,250	5,250	6,250	6,250
Total Input (kW)	(In + Out) (In + Out + Heater)		1.77	1.77	2.38	2.38	2.59	2.59
Indoor unit	Input (kW)		0.14	0.14	0.13	0.13	0.13	0.13
Indoor unit	Current (A)		0.62	0.62	0.63	0.63	0.59	0.59
Outdoor unit	Starting current (A)		35	19	62	31	74	34
Outdoor unit	Current (A)		7.68	2.58	10.71	3.84	12.42	4.65

Indoor unit ..... 240V 50Hz Single phase Outdoor unit .... 240V 50Hz Single phase / 415V 50Hz 3 phases

Model		Indoor unit	PLA-P1.6KA		PLA-P2KA		PLA-P2.5KA	
		Outdoor unit	PU-P1.6VGAA	PU-P1.6YGAA	PU-P2VGAA	PU-P2YGAA	PU-P2.5VGAA	PU-P2.5YGAA
Mode			Cool	Cool	Cool	Cool	Cool	Cool
Capacity (W)			4,400	4,400	5,300	5,300	6,300	6,300
Total Input (kW)	(In + Out) (In + Out + Heater)		1.82	1.82	2.44	2.44	2.63	2.63
Indoor unit	Input (kW)		0.15	0.15	0.14	0.14	0.14	0.14
Indoor unit	Current (A)		0.64	0.64	0.65	0.65	0.61	0.61
Outdoor unit	Starting current (A)		36	20	62	31	77	35
Outdoor unit	Current (A)		7.36	2.49	10.26	3.70	11.90	4.48

A.1.4 OUTLINES AND DIMENSIONS

PLH-P3AAH, PLA-P3AA
PLH-P4AAH, PLA-P4AA
PLH-P5AAH, PLA-P5AA
PLH-P6AAH, PLA-P6AA

Unit: mm

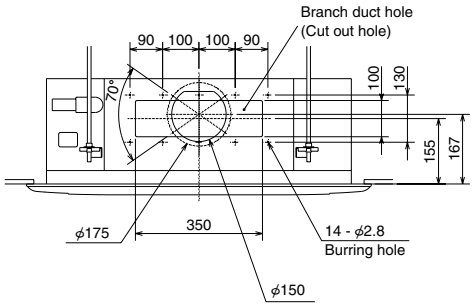

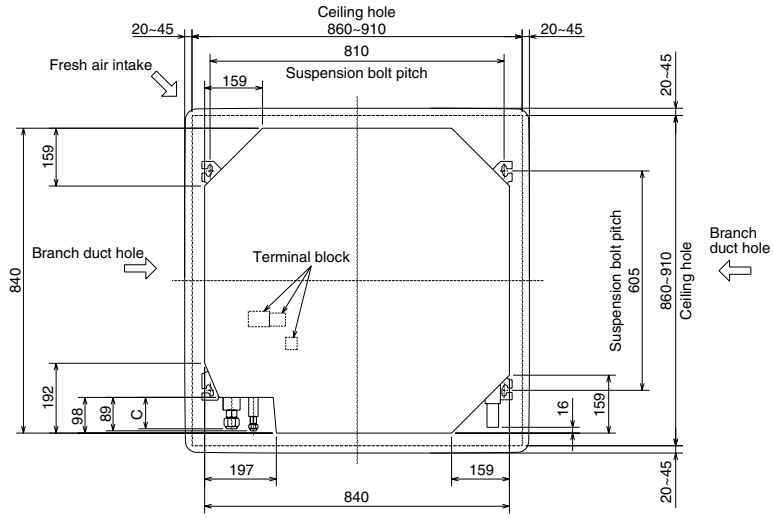

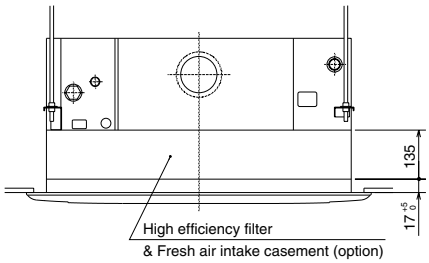

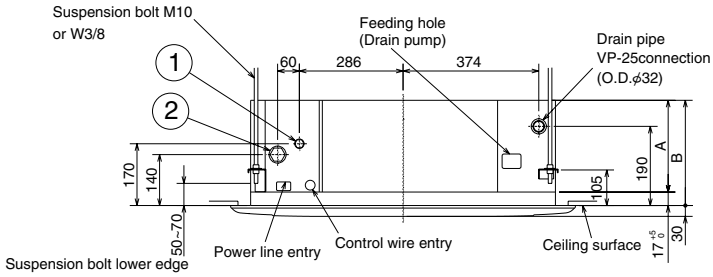

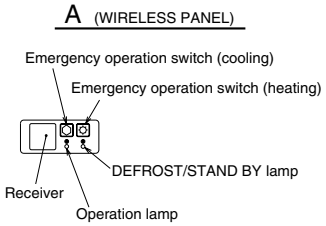

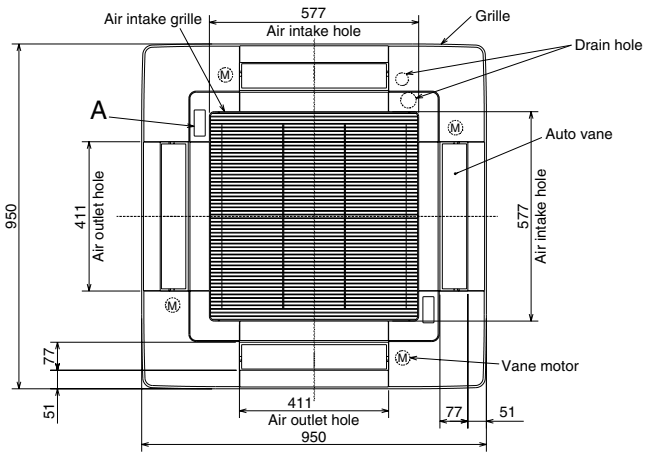

Models	①	②	A	B	C
PLH-P3AAH PLA-P3AA	Refrigerant pipe (9.52mm dia.) flared connection 3/8F	Refrigerant pipe (15.88mm dia.) flared connection 5/8F	241	258	80
PLH-P4/P5/P6AAH PLA-P4/P5/P6AA	Refrigerant pipe (9.52mm dia.) flared connection 3/8F	Refrigerant pipe (19.05mm dia.) flared connection 3/4F	281	298	84

PLH-P1.6KAH, PLH-P2KAH, PLH-P2.5KAH
PLA-P1.6KA, PLA-P2KA, PLA-P2.5KA

Unit: mm

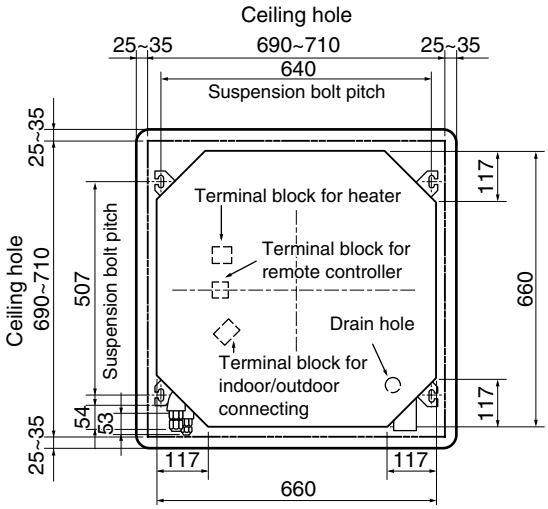

NOTE 1. The electrical parts box may be removed during servicing. When connecting the power line and the control wire, provide enough length to the electric wires.

NOTE 2. When installing the optional high-efficiency filter, the dimension between the transom and ceiling shall be more than 440mm. Also, when installing the optional fresh air intake casement or the multi-functional casement, the dimension between the transom and ceiling shall be more than 440mm. (The optional high-efficiency filter can also be installed.)

Models	①	②
PLH-P1.6KAH PLH-P2KAH PLH-P2.5KAH PLA-P1.6KA PLA-P2KA PLA-P2.5KA	Refrigerant pipe (ϕ 9.52mm) Flared connection 3/8F	Refrigerant pipe (ϕ 15.88mm) Flared connection 5/8F

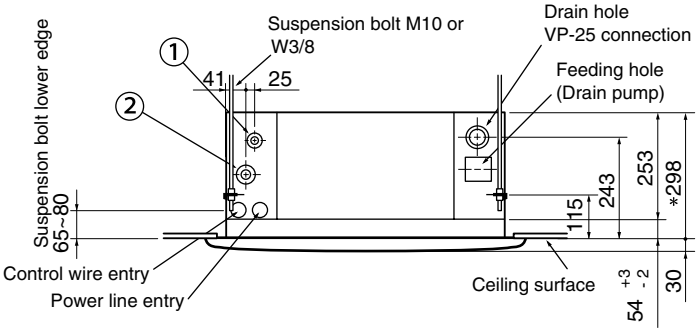

*Leave space of 10~15mm between the top surface of the unit and the ceiling slab.

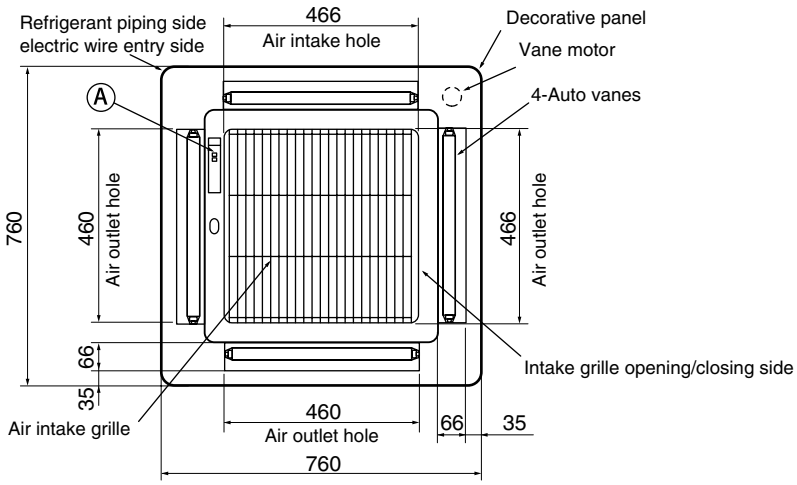

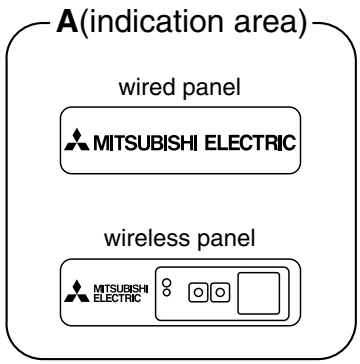

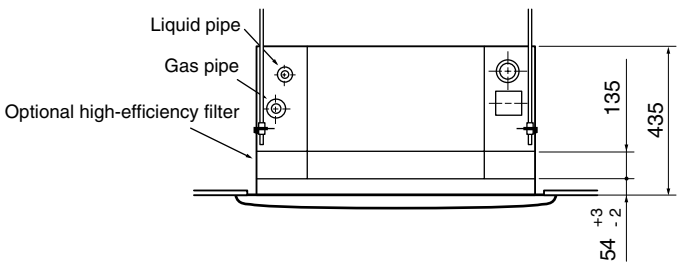

A.1.5 WIRING DIAGRAM

PLH-P3/P4/P5/P6AAH, PLA-P3/P4/P5/P6AA

SYMBOL		NAME	SYMBOL		NAME	SYMBOL		NAME
P.B		INDOOR POWER BOARD	MV		VANE MOTOR	W.B		WIRELESS REMOTE CONTROLLER BOARD
	F1	FUSE(4A)	DP		DRAIN-UP MACHINE		RU	RECEIVING UNIT
	ZNR	VARISTOR	DS		DRAIN SENSOR		BZ	BUZZER
I.B		INDOOR CONTROLLER BOARD	H2		DEW PREVENTION HEATER		LED1	LED(RUN INDICATOR)
	CN2L	CONNECTOR(LOSSNAY)	TB2		TERMINAL BLOCK(HEATER)		LED2	LED(HOT ADJUST)
	CN32	CONNECTOR(REMOTE SWITCH)	TB4		TERMINAL BLOCK(INDOOR/OUTDOOR CONNECTING LINE)		SW1	SWITCH(HEATING ON/OFF)
	CN41	CONNECTOR(HA TERMINAL-A)	TB5		TERMINAL BLOCK(REMOTE		SW2	SWITCH(COOLING ON/OFF)
	SW1	JUMPER WIRE(MODEL SELECTION)			CONTROLLER TRANSMISSION LINE)	HEATER		
	SW2	JUMPER WIRE(CAPACITY CORD)	TH1		ROOM TEMP.THERMISTOR		FS1	THERMAL FUSE(72℃,16A)
	SWE	SWITCH(EMERGENCY OPERATION)			(0℃/15kΩ,25℃/5.4kΩ DETECT)		FS2	THERMAL FUSE(104℃,16A)
	X1	RELAY(DRAIN PUMP)	TH2		PIPE TEMP.THERMISTOR/LIQUID		H1	HEATER
	X4	RELAY(FAN MOTOR)			(0℃/15kΩ,25℃/5.4kΩ DETECT)		26H	HEATER THERMAL SWITCH
	FC	FAN PHASE CONTROL	TH5		COND./EVA.TEMP.THERMISTOR		88H	HEATER CONTACTOR
	LED1	POWER SUPPLY(I.B)			(0℃/15kΩ,25℃/5.4kΩ DETECT)			
	LED2	POWER SUPPLY(R.B)	R.B		REMOTE CONTROLLER BOARD			
	LED3	TRANSMISSION(INDOOR-OUTDOOR)		CN2	CONNECTOR(SCHEDULE TIMER)			
C		CAPACITOR(FAN MOTOR)		TB6	TERMINAL BLOCK(REMOTE			
MF		FAN MOTOR			CONTROLLER TRANSMISSION LINE)			

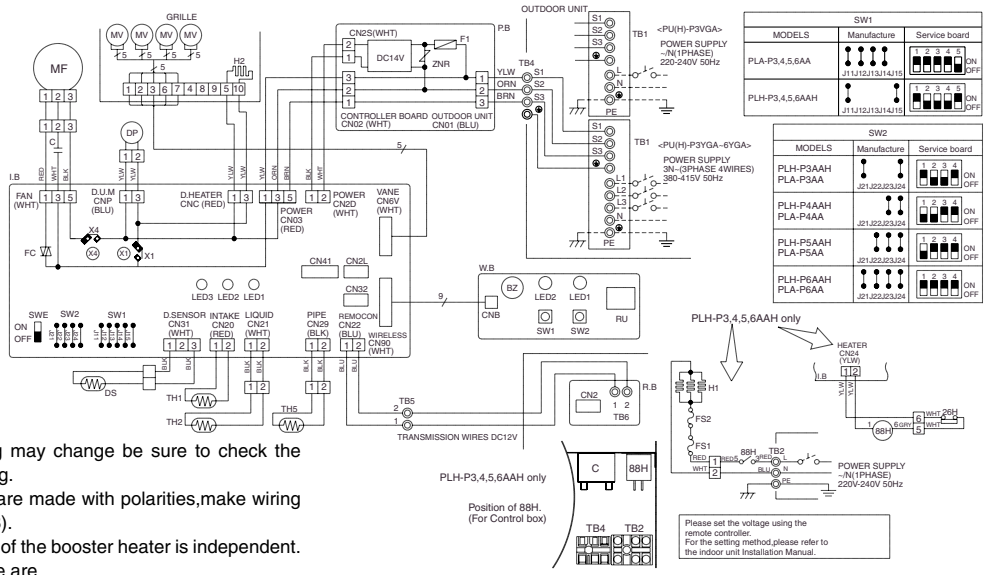

NOTE:

1. Since the outdoor side electric wiring may change be sure to check the outdoor unit electric wiring for servicing.
2. Indoor and outdoor connecting wires are made with polarities,make wiring matching terminal numbers (S1,S2,S3).
3. Make sure that the main power supply of the booster heater is independent.
4. Symbols used in wiring diagram above are,
   ◎ : Terminal block, □□□ : Connector.

[Servicing]

Fasten terminal of the terminal board "TB4" equips lock system.

To remove the fastened terminal,pull it while pressing the protruding portion (locking lever)of the terminal.The fastened terminal protruding portion should face upward.

[Self-diagnosis]

1. For details on how to operate self-diagnosis with the wireless remote control,refer to the technical manuals etc.
2. For the wired remote control:When you quickly press twice the CHECK switch on the remote control,the unit begins self-diagnosis, and Check Codes generated in the past appear on the display.
   For Check Codes and Symptoms refer to the table below.

Check code	Symptom
P1	Abnormality of room temperature thermistor(TH1).
P2	Abnormality of pipe temperature thermistor/Liquid(TH2).
P4	Abnormality of drain sensor(DS).
P5	Malfunction of drain-up machine.
P6	Freezing /overheating protection is working.
P8	Abnormality of pipe temperature.
P9	Abnormality of pipe temperature thermistor/ Cond./Eva.(TH5).
E0~E5	Abnormality of the signal transmission between remote controller and indoor unit.
E6~EF	Abnormality of signal transmission between indoor unit and outdoor unit ("EE" indicates abnormality of combination).
U*	Abnormality in outdoor unit. Refer to outdoor unit wiring diagram.
F*	Abnormality in outdoor unit. Refer to outdoor unit wiring diagram.
——	No trouble generated in the past.
FFFF	No corresponding unit.

[Emergency operation procedure]

1. When the wired remote control or the indoor unit microcomputer has failed,but all other components work properly, if you set the switch(SWE) on the indoor control panel ON,the indoor unit will begin Emergency Operation.
   When Emergency Operation is activated, the indoor unit operates as follows:
   (1) Indoor fan is running at high speed. (2)Drain-up machine is working.
   ※ Note on the wireless remote control:when the remote control does not function,it is possible to activate Emergency Operation by using the indoor unit emergency operation switch(SW1,SW2 of the wireless signal receiver board).
   However,if the indoor unit microcomputer has failed,it is nesessary to proceed with points 2 and 3 below as in the case of the wired remote control.
2. When you activate emergency operation of the cooling or heating,you have to set the switch(SWE) on the indoor control panel and activate emergency operation of the outdoor unit.
   For details on how to activate emergency operation of the outdoor unit,refer to the outdoor unit wiring diagram.
3. Before you activate emergency operation,check the following points:
   (1) Emergency operation cannot be activated when:
   · the outdoor unit malfunctions. · the indoor fan malfunctions.
   · when it has detected the malfunction of drain-up machine during self-diagnosing.
   (2) Emergency operation becomes continuous only by switching the power source on/off.
   ON/OFF on the remote control or temperature control etc. dose not function.
   (3) Avoid operating for a long time when the outdoor unit begins defrosting while emergency operation of the heating is activated,because it will start to blow cold air.
   (4) Emergency cooling should be limited to 10 hours maximum (The indoor unit heat exchanger may freeze).
   (5) After emergency operation has been deactivated,set the switches etc.to their original positions.
   (6) Movement of the vanes does not work in emergency operation,therefore you have to slowly set them manually to the appropriate position.

PLH-P1.6/P2/P2.5KAH, PLA-P1.6/P2/P2.5KA

SYMBOL	NAME	SYMBOL	NAME	SYMBOL	NAME
P.B	INDOOR POWER BOARD	CN25	CONNECTOR (HUMIDIFIER)	MF	FAN MOTOR
F1	FUSE (4A)	CN32	CONNECTOR (REMOTE SWITCH)	MV	VANE MOTOR
ZNR	VARISTOR	CN41	CONNECTOR (HA TERMINAL-A)	TB2	TERMINAL BLOCK (HEATER)
R.B	REMOTE CONTROLLER BOARD	FC	FAN PHASE CONTROL	TB4	TERMINAL BLOCK (INDOOR/OUTDOOR CONNECTING LINE)
CN2	CONNECTOR (SCHEDULE TIMER)	LED1	POWER SUPPLY (I.B)		
TB6	TERMINAL BLOCK (REMOTE CONTROLLER TRAMSMISSION LINE)	LED2	POWER SUPPLY (R.B)	TB5	TERMINAL BLOCK (REMOTE CONTROL TRANSMISSION LINE)
		LED3	TRANSMISSION (INDOOR-OUTDOOR)		
W.B	WIRELESS REMOTE CONTROLLER BOARD (OPTION)	SW1	JUMPER WIRE (MODEL SELECTION)	TH1	ROOM TEMP,THERMISTOR (0℃/15kΩ,25℃/5.4kΩ DETECT)
		SW2	JUMPER WIRE (CAPACITY CORD)		
RU	RECEIVING UNIT	SWE	SWITCH (EMERGENCY OPERATION)	TH2	PIPE TEMP,THERMISTOR/LIQUID (0℃/15kΩ,25℃/5.4kΩ DETECT)
BZ	BUZZER	X1	RELAY (DRAIN PUMP/D.HEATER)		
LED1	LED (RUN INDICATOR)	X3	RELAY (VANE MOTOR)	TH5	COND./EVA.TEMP.THERMISTOR (0℃/15kΩ,25℃/5.4kΩ DETECT)
SW1	SWITCH (HEATING ON/OFF)	X4	RELAY (FAN MOTOR)		
SW2	SWITCH (COOLING ON/OFF)	C	CAPACITOR (FAN MOTOR)	HEATER	
W.R	WIRELESS REMOTE CONTROLLER (OPTION)	DP	DRAIN-UP MACHINE	FS1,2	THERMAL FUSE (77℃,15A)
		DS	DRAIN SENSOR	H1	HEATER
I.B	INDOOR CONTROLLER BOARD	H2	DEW PREVENTION HEATER	26H	HEATER THERMAL SWITCH
CN2L	CONNECTOR (LOSSNAY)	LS	LIMIT SWITCH	88H	HEATER CONTACTOR

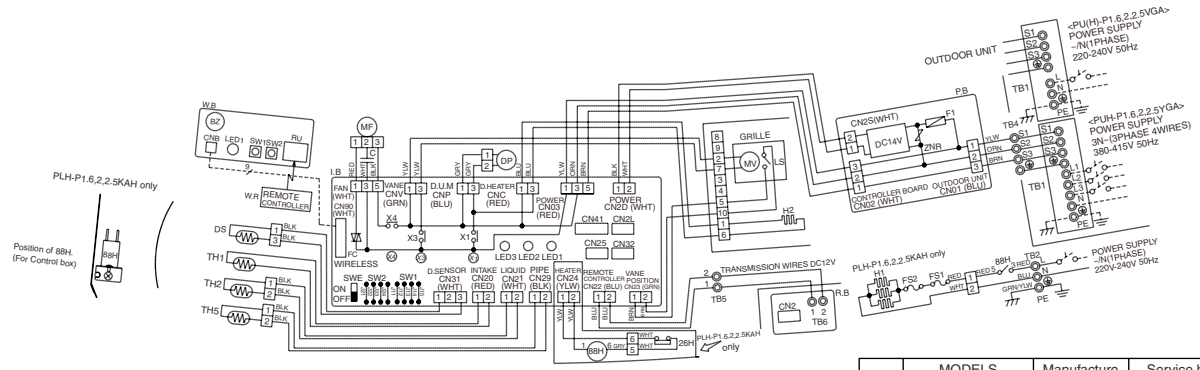

SW1	MODELS	Manufacture	Service board
	PLH-P1.6,2,2.5KAH	J11 J12 J13 J14 J15	1 2 3 4 5 ON OFF
	PLA-P1.6,2,2.5KA	J11 J12 J13 J14 J15	1 2 3 4 5 ON OFF

SW2	MODELS	Manufacture	Service board
	PLH-P1.6KAH PLA-P1.6KA	J21 J22 J23 J24	1 2 3 4 ON OFF
	PLH-P2KAH PLA-P2KA	J21 J22 J23 J24	1 2 3 4 ON OFF
	PLH-P2.5KAH PLA-P2.5KA	J21 J22 J23 J24	1 2 3 4 ON OFF

NOTE:

1. Since the outdoor side electric wiring may change be sure to check the outdoor unit electric wiring for servicing.
2. Indoor and outdoor connecting wires are made with polarities,make wiring matching terminal numbers (S1,S2,S3).
3. Make sure that the main power supply of the booster heater is independent.
4. Symbols used in wiring diagram above are,
   ◎ : Terminal block, □□□ : Connector.

Please set the voltage using the remote controller.
For the setting method,please refer to the indoor unit Installation Manual.

[Self-diagnosis]

1. For details on how to operate self-diagnosis with the wireless remote control,refer to the technical manuals etc.
2. For the wired remote control:When you quickly press twice the CHECK switch on the remote control,the unit begins self-diagnosis, and Check Codes generated in the past appear on the display.
   For Check Codes and Symptoms refer to the table below.

Check code	Symptom
P1	Abnormality of room temperature thermistor(TH1).
P2	Abnormality of pipe temperature thermistor/Liquid(TH2).
P4	Abnormality of drain sensor(DS).
P5	Malfunction of drain-up machine.
P6	Freezing /overheating protection is working.
P8	Abnormality of pipe temperature.
P9	Abnormality of pipe temperature thermistor/ Cond./Eva.(TH5).
E0~E5	Abnormality of the signal transmission between remote controller and indoor unit.
E6~EF	Abnormality of signal transmission between indoor unit and outdoor unit (“EE” indicates abnormality of combination).
U*	Abnormality in outdoor unit. Refer to outdoor unit wiring diagram.
F*	Abnormality in outdoor unit. Refer to outdoor unit wiring diagram.
——	No trouble generated in the past.
FFFF	No corresponding unit.

[Emergency operation procedure]

1. When the wired remote control or the indoor unit microcomputer has failed,but all other components work properly, if you set the switch(SWE) on the indoor control panel ON,the indoor unit will begin Emergency Operation.
   When Emergency Operation is activated, the indoor unit operates as follows:
   (1) Indoor fan is running at high speed. (2)Drain-up machine is working.
   ※ Note on the wireless remote control:when the remote control does not function,it is possible to activate
   Emergency Operation by using the indoor unit emergency operation switch(SW1,SW2 of the wireless signal receiver board).
   However,if the indoor unit microcomputer has failed,it is nesessary to proceed with points 2 and 3 below as in the case of the wired remote control.
2. When you activate emergency operation of the cooling or heating,you have to set the switch(SWE) on the indoor control panel and activate emergency operation of the outdoor unit.
   For details on how to activate emergency operation of the outdoor unit,refer to the outdoor unit wiring diagram.
3. Before you activate emergency operation,check the following points:
   (1) Emergency operation cannot be activated when:
   · the outdoor unit malfunctions.
   · the indoor fan malfunctions.
   (2) Emergency operation becomes continuous only by switching the power source on/off.
   ON/OFF on the remote control or temperature control etc. dose not function.
   (3) Avoid operating for a long time when the outdoor unit begins defrosting while emergency operation of the heating is activated,because it will start to blow cold air.
   (4) Emergency cooling should be limited to 10 hours maximum (The indoor unit heat exchanger may freeze).
   (5) After emergency operation has been deactivated,set the switches etc.to their original positions.

A.1.6 REFRIGERANT SYSTEM DIAGRAM

PLH-P1.6KAH, PLA-P1.6KA / PUH-P1.6VGAA, PUH-P1.6YGAA
PLH-P2KAH, PLA-P2KA / PUH-P2VGAA, PUH-P2YGAA
PLH-P2.5KAH, PLA-P2.5KA / PUH-P2.5VGAA, PUH-P2.5YGAA
PLH-P3AAH, PLA-P3AA / PUH-P3VGAA, PUH-P3YGAA

Unit: mm

INDOOR UNIT **OUTDOOR UNIT**

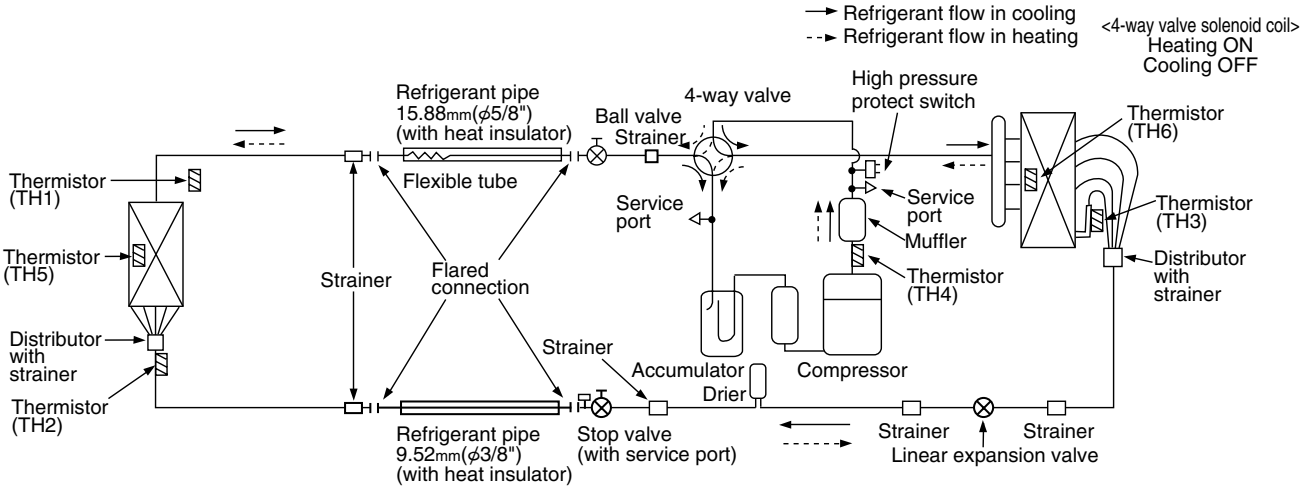

PLH-P4AAH, PLA-P4AA / PUH-P4VGAA, PUH-P4YGAA

INDOOR UNIT **OUTDOOR UNIT**

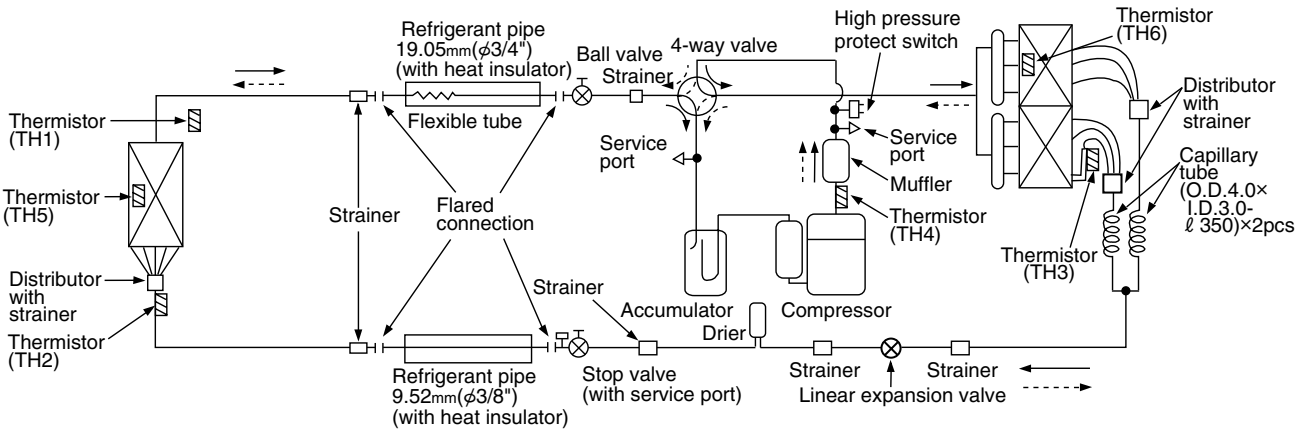

PLH-P5AAH, PLA-P5AA / PUH-P5YGAA
PLH-P6AAH, PLA-P6AA / PUH-P6YGAA

Unit: mm

INDOOR UNIT **OUTDOOR UNIT**

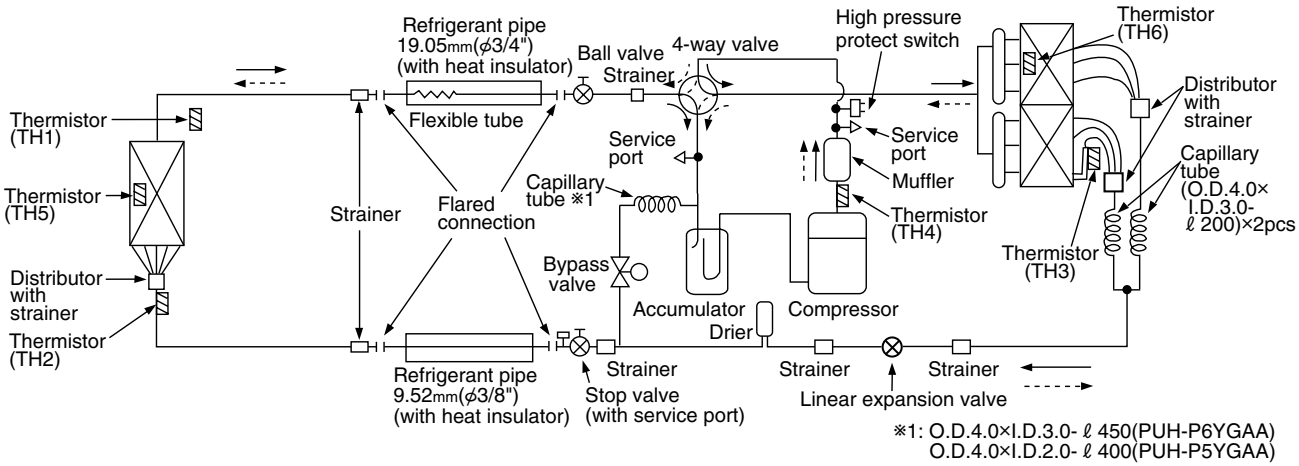

PLA-P1.6KA / PU-P1.6VGAA, PU-P1.6YGAA
PLA-P2KA / PU-P2VGAA, PU-P2YGAA
PLA-P2.5KA / PU-P2.5VGAA, PU-P2.5YGAA
PLA-P3AA / PU-P3VGAA, PU-P3YGAA

Unit: mm

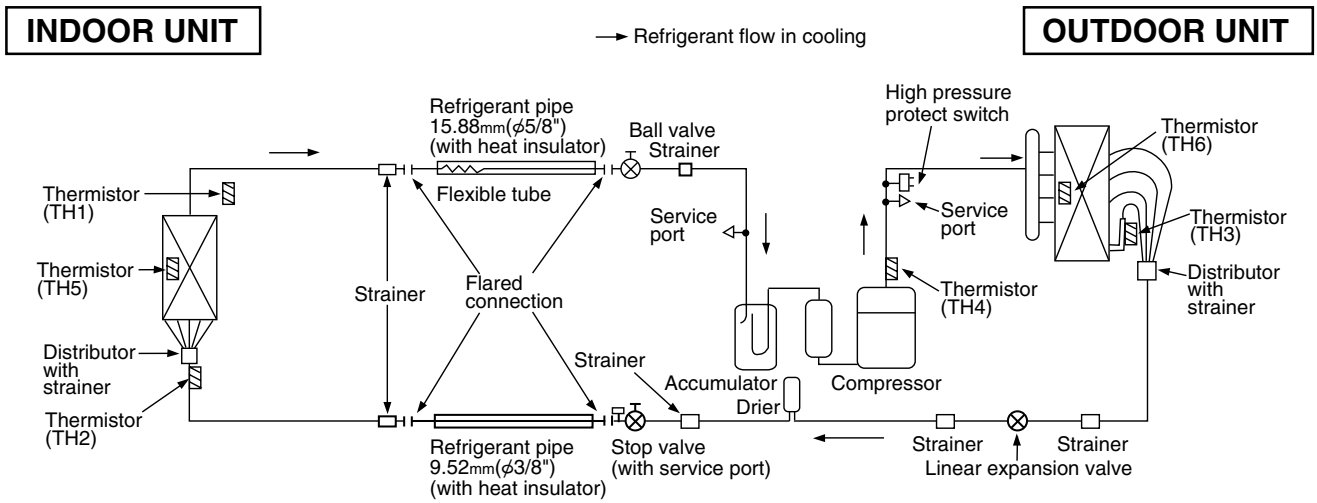

PLA-P4AA / PU-P4VGAA, PU-P4YGAA

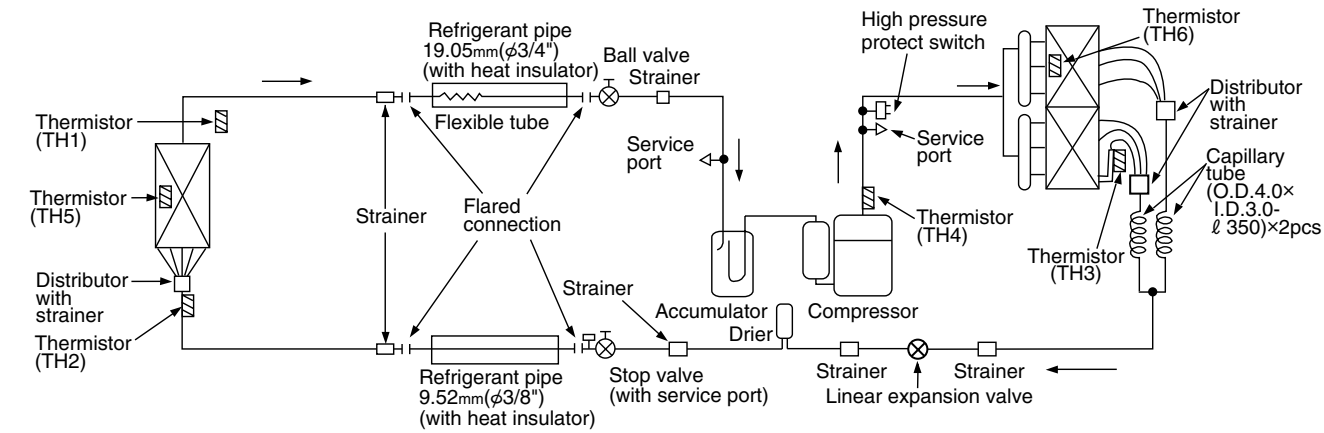

PLA-P5AA / PU-P5YGAA
PLA-P6AA / PU-P6YGAA

Unit: mm

INDOOR UNIT **OUTDOOR UNIT**

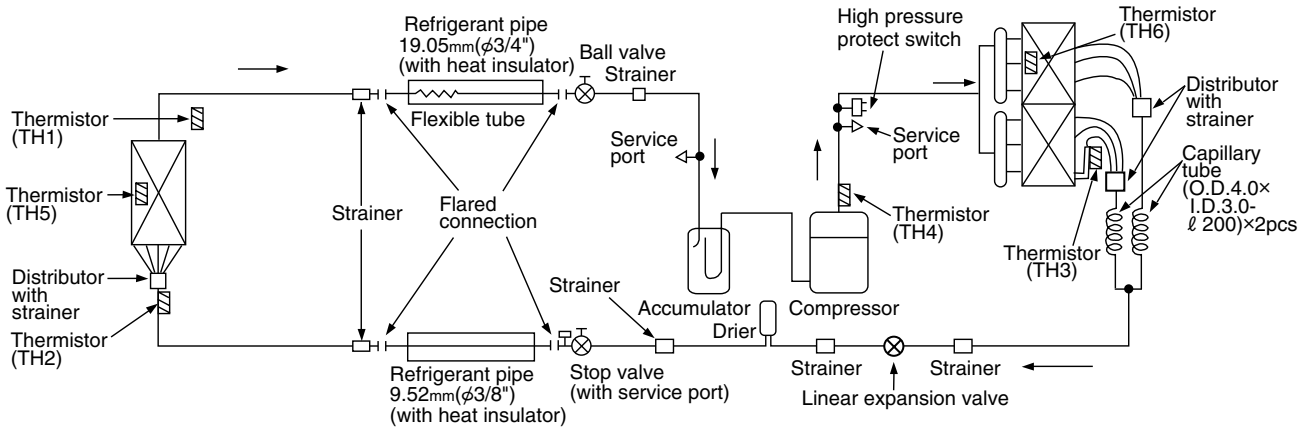

A.1.7 PERFORMANCE DATA

COOLING CAPACITY (240V)

PLH-P3AAH, PLA-P3AA

CAPACITY : 7,800 W INPUT : 3.44 kW SHF : 0.74

Indoor intake air DB (℃)	Indoor intake air WB (℃)	Outdoor intake air DB (℃)											
		20				25				30			
		CA	SHC	SHF	P.C.	CA	SHC	SHF	P.C.	CA	SHC	SHF	P.C.
20	16	7,722	4,942	0.64	2.75	7,488	4,792	0.64	2.91	7,254	4,643	0.64	3.08
20	18	8,268	4,299	0.52	2.80	8,034	4,178	0.52	2.96	7,761	4,036	0.52	3.16
20	20	8,892	3,557	0.40	2.89	8,697	3,479	0.40	3.03	8,463	3,385	0.40	3.23
22	16	7,722	5,560	0.72	2.75	7,488	5,391	0.72	2.91	7,254	5,223	0.72	3.08
22	18	8,268	4,961	0.60	2.80	8,034	4,820	0.60	2.96	7,761	4,657	0.60	3.16
22	20	8,892	4,268	0.48	2.89	8,697	4,175	0.48	3.03	8,463	4,062	0.48	3.23
24	16	7,722	6,178	0.80	2.75	7,488	5,990	0.80	2.91	7,254	5,803	0.80	3.08
24	18	8,268	5,622	0.68	2.80	8,034	5,463	0.68	2.96	7,761	5,277	0.68	3.16
24	20	8,892	4,980	0.56	2.89	8,697	4,870	0.56	3.03	8,463	4,739	0.56	3.23
26	16	7,722	6,795	0.88	2.75	7,488	6,589	0.88	2.91	7,254	6,384	0.88	3.08
26	18	8,268	6,284	0.76	2.80	8,034	6,106	0.76	2.96	7,761	5,898	0.76	3.16
26	20	8,892	5,691	0.64	2.89	8,697	5,566	0.64	3.03	8,463	5,416	0.64	3.23
28	16	7,722	7,413	0.96	2.75	7,488	7,188	0.96	2.91	7,254	6,964	0.96	3.08
28	18	8,268	6,945	0.84	2.80	8,034	6,749	0.84	2.96	7,761	6,519	0.84	3.16
28	20	8,892	6,402	0.72	2.89	8,697	6,262	0.72	3.03	8,463	6,093	0.72	3.23
30	16	7,722	7,722	1.00	2.75	7,488	7,488	1.00	2.91	7,254	7,254	1.00	3.08
30	18	8,268	7,607	0.92	2.80	8,034	7,391	0.92	2.96	7,761	7,140	0.92	3.16
30	20	8,892	7,114	0.80	2.89	8,697	6,958	0.80	3.03	8,463	6,770	0.80	3.23
32	16	7,722	7,722	1.00	2.75	7,488	7,488	1.00	2.91	7,254	7,254	1.00	3.08
32	18	8,268	8,268	1.00	2.80	8,034	8,034	1.00	2.96	7,761	7,761	1.00	3.16
32	20	8,892	7,825	0.88	2.89	8,697	7,653	0.88	3.03	8,463	7,447	0.88	3.23
34	16	7,722	7,722	1.00	2.75	7,488	7,488	1.00	2.91	7,254	7,254	1.00	3.08
34	18	8,268	8,268	1.00	2.80	8,034	8,034	1.00	2.96	7,761	7,761	1.00	3.16
34	20	8,892	8,536	0.96	2.89	8,697	8,349	0.96	3.03	8,463	8,124	0.96	3.23

NOTE: CA: Capacity (W) SHC: Sensible heat capacity (W)
P.C.: Power consumption (kW) SHF: Sensible heat factor

COOLING CAPACITY (240V)

PLH-P3AAH, PLA-P3AA

CAPACITY : 7,800 W INPUT : 3.44 kW SHF : 0.74

Indoor intake air DB (℃)	Indoor intake air WB (℃)	Outdoor intake air DB (℃)											
		35				40				45			
		CA	SHC	SHF	P.C.	CA	SHC	SHF	P.C.	CA	SHC	SHF	P.C.
20	16	6,942	4,443	0.64	3.30	6,630	4,243	0.64	3.54	6,318	4,044	0.64	3.84
20	18	7,488	3,894	0.52	3.39	7,254	3,772	0.52	3.65	6,786	3,529	0.52	3.92
20	20	8,112	3,245	0.40	3.47	7,800	3,120	0.40	3.72	7,332	2,933	0.40	3.99
22	16	6,942	4,998	0.72	3.30	6,630	4,774	0.72	3.54	6,318	4,549	0.72	3.84
22	18	7,488	4,493	0.60	3.39	7,254	4,352	0.60	3.65	6,786	4,072	0.60	3.92
22	20	8,112	3,894	0.48	3.47	7,800	3,744	0.48	3.72	7,332	3,519	0.48	3.99
24	16	6,942	5,554	0.80	3.30	6,630	5,304	0.80	3.54	6,318	5,054	0.80	3.84
24	18	7,488	5,092	0.68	3.39	7,254	4,933	0.68	3.65	6,786	4,614	0.68	3.92
24	20	8,112	4,543	0.56	3.47	7,800	4,368	0.56	3.72	7,332	4,106	0.56	3.99
26	16	6,942	6,109	0.88	3.30	6,630	5,834	0.88	3.54	6,318	5,560	0.88	3.84
26	18	7,488	5,691	0.76	3.39	7,254	5,513	0.76	3.65	6,786	5,157	0.76	3.92
26	20	8,112	5,192	0.64	3.47	7,800	4,992	0.64	3.72	7,332	4,692	0.64	3.99
28	16	6,942	6,664	0.96	3.30	6,630	6,365	0.96	3.54	6,318	6,065	0.96	3.84
28	18	7,488	6,290	0.84	3.39	7,254	6,093	0.84	3.65	6,786	5,700	0.84	3.92
28	20	8,112	5,841	0.72	3.47	7,800	5,616	0.72	3.72	7,332	5,279	0.72	3.99
30	16	6,942	6,942	1.00	3.30	6,630	6,630	1.00	3.54	6,318	6,318	1.00	3.84
30	18	7,488	6,889	0.92	3.39	7,254	6,674	0.92	3.65	6,786	6,243	0.92	3.92
30	20	8,112	6,490	0.80	3.47	7,800	6,240	0.80	3.72	7,332	5,866	0.80	3.99
32	16	6,942	6,942	1.00	3.30	6,630	6,630	1.00	3.54	6,318	6,318	1.00	3.84
32	18	7,488	7,488	1.00	3.39	7,254	7,254	1.00	3.65	6,786	6,786	1.00	3.92
32	20	8,112	7,139	0.88	3.47	7,800	6,864	0.88	3.72	7,332	6,452	0.88	3.99
34	16	6,942	6,942	1.00	3.30	6,630	6,630	1.00	3.54	6,318	6,318	1.00	3.84
34	18	7,488	7,488	1.00	3.39	7,254	7,254	1.00	3.65	6,786	6,786	1.00	3.92
34	20	8,112	7,788	0.96	3.47	7,800	7,488	0.96	3.72	7,332	7,039	0.96	3.99

NOTE: CA: Capacity (W) SHC: Sensible heat capacity (W)
P.C.: Power consumption (kW) SHF: Sensible heat factor

COOLING CAPACITY (240V)

PLH-P4AAH, PLA-P4AA

CAPACITY : 9,700 W INPUT : 3.69 kW SHF : 0.78

Indoor intake air DB (℃)	Indoor intake air WB (℃)	Outdoor intake air DB (℃)											
		20				25				30			
		CA	SHC	SHF	P.C.	CA	SHC	SHF	P.C.	CA	SHC	SHF	P.C.
20	16	9,603	6,530	0.68	2.95	9,312	6,332	0.68	3.12	9,021	6,134	0.68	3.30
20	18	10,282	5,758	0.56	3.01	9,991	5,595	0.56	3.17	9,652	5,405	0.56	3.39
20	20	11,058	4,866	0.44	3.10	10,816	4,759	0.44	3.25	10,525	4,631	0.44	3.47
22	16	9,603	7,298	0.76	2.95	9,312	7,077	0.76	3.12	9,021	6,856	0.76	3.30
22	18	10,282	6,580	0.64	3.01	9,991	6,394	0.64	3.17	9,652	6,177	0.64	3.39
22	20	11,058	5,750	0.52	3.10	10,816	5,624	0.52	3.25	10,525	5,473	0.52	3.47
24	16	9,603	8,067	0.84	2.95	9,312	7,822	0.84	3.12	9,021	7,578	0.84	3.30
24	18	10,282	7,403	0.72	3.01	9,991	7,194	0.72	3.17	9,652	6,949	0.72	3.39
24	20	11,058	6,635	0.60	3.10	10,816	6,489	0.60	3.25	10,525	6,315	0.60	3.47
26	16	9,603	8,835	0.92	2.95	9,312	8,567	0.92	3.12	9,021	8,299	0.92	3.30
26	18	10,282	8,226	0.80	3.01	9,991	7,993	0.80	3.17	9,652	7,721	0.80	3.39
26	20	11,058	7,519	0.68	3.10	10,816	7,355	0.68	3.25	10,525	7,157	0.68	3.47
28	16	9,603	9,603	1.00	2.95	9,312	9,312	1.00	3.12	9,021	9,021	1.00	3.30
28	18	10,282	9,048	0.88	3.01	9,991	8,792	0.88	3.17	9,652	8,493	0.88	3.39
28	20	11,058	8,404	0.76	3.10	10,816	8,220	0.76	3.25	10,525	7,999	0.76	3.47
30	16	9,603	9,603	1.00	2.95	9,312	9,312	1.00	3.12	9,021	9,021	1.00	3.30
30	18	10,282	9,871	0.96	3.01	9,991	9,591	0.96	3.17	9,652	9,265	0.96	3.39
30	20	11,058	9,289	0.84	3.10	10,816	9,085	0.84	3.25	10,525	8,841	0.84	3.47
32	16	9,603	9,603	1.00	2.95	9,312	9,312	1.00	3.12	9,021	9,021	1.00	3.30
32	18	10,282	10,282	1.00	3.01	9,991	9,991	1.00	3.17	9,652	9,652	1.00	3.39
32	20	11,058	10,173	0.92	3.10	10,816	9,950	0.92	3.25	10,525	9,683	0.92	3.47
34	16	9,603	9,603	1.00	2.95	9,312	9,312	1.00	3.12	9,021	9,021	1.00	3.30
34	18	10,282	10,282	1.00	3.01	9,991	9,991	1.00	3.17	9,652	9,652	1.00	3.39
34	20	11,058	11,058	1.00	3.10	10,816	10,816	1.00	3.25	10,525	10,525	1.00	3.47

NOTE: CA: Capacity (W) SHC: Sensible heat capacity (W)
P.C.: Power consumption (kW) SHF: Sensible heat factor

COOLING CAPACITY (240V)

PLH-P4AAH, PLA-P4AA

CAPACITY : 9,700 W INPUT : 3.69 kW SHF : 0.78

Indoor intake air DB (℃)	Indoor intake air WB (℃)	Outdoor intake air DB (℃)											
		35				40				45			
		CA	SHC	SHF	P.C.	CA	SHC	SHF	P.C.	CA	SHC	SHF	P.C.
20	16	8,633	5,870	0.68	3.54	8,245	5,607	0.68	3.80	7,857	5,343	0.68	4.11
20	18	9,312	5,215	0.56	3.63	9,021	5,052	0.56	3.91	8,439	4,726	0.56	4.21
20	20	10,088	4,439	0.44	3.73	9,700	4,268	0.44	3.99	9,118	4,012	0.44	4.28
22	16	8,633	6,561	0.76	3.54	8,245	6,266	0.76	3.80	7,857	5,971	0.76	4.11
22	18	9,312	5,960	0.64	3.63	9,021	5,773	0.64	3.91	8,439	5,401	0.64	4.21
22	20	10,088	5,246	0.52	3.73	9,700	5,044	0.52	3.99	9,118	4,741	0.52	4.28
24	16	8,633	7,252	0.84	3.54	8,245	6,926	0.84	3.80	7,857	6,600	0.84	4.11
24	18	9,312	6,705	0.72	3.63	9,021	6,495	0.72	3.91	8,439	6,076	0.72	4.21
24	20	10,088	6,053	0.60	3.73	9,700	5,820	0.60	3.99	9,118	5,471	0.60	4.28
26	16	8,633	7,942	0.92	3.54	8,245	7,585	0.92	3.80	7,857	7,228	0.92	4.11
26	18	9,312	7,450	0.80	3.63	9,021	7,217	0.80	3.91	8,439	6,751	0.80	4.21
26	20	10,088	6,860	0.68	3.73	9,700	6,596	0.68	3.99	9,118	6,200	0.68	4.28
28	16	8,633	8,633	1.00	3.54	8,245	8,245	1.00	3.80	7,857	7,857	1.00	4.11
28	18	9,312	8,195	0.88	3.63	9,021	7,938	0.88	3.91	8,439	7,426	0.88	4.21
28	20	10,088	7,667	0.76	3.73	9,700	7,372	0.76	3.99	9,118	6,930	0.76	4.28
30	16	8,633	8,633	1.00	3.54	8,245	8,245	1.00	3.80	7,857	7,857	1.00	4.11
30	18	9,312	8,940	0.96	3.63	9,021	8,660	0.96	3.91	8,439	8,101	0.96	4.21
30	20	10,088	8,474	0.84	3.73	9,700	8,148	0.84	3.99	9,118	7,659	0.84	4.28
32	16	8,633	8,633	1.00	3.54	8,245	8,245	1.00	3.80	7,857	7,857	1.00	4.11
32	18	9,312	9,312	1.00	3.63	9,021	9,021	1.00	3.91	8,439	8,439	1.00	4.21
32	20	10,088	9,281	0.92	3.73	9,700	8,924	0.92	3.99	9,118	8,389	0.92	4.28
34	16	8,633	8,633	1.00	3.54	8,245	8,245	1.00	3.80	7,857	7,857	1.00	4.11
34	18	9,312	9,312	1.00	3.63	9,021	9,021	1.00	3.91	8,439	8,439	1.00	4.21
34	20	10,088	10,088	1.00	3.73	9,700	9,700	1.00	3.99	9,118	9,118	1.00	4.28

NOTE: CA: Capacity (W) SHC: Sensible heat capacity (W)
P.C.: Power consumption (kW) SHF: Sensible heat factor

COOLING CAPACITY (240V)

PLH-P5AAH, PLA-P5AA

CAPACITY : 12,800 W INPUT : 5.00 kW SHF : 0.72

Indoor intake air DB (℃)	Indoor intake air WB (℃)	Outdoor intake air DB (℃)											
		20				25				30			
		CA	SHC	SHF	P.C.	CA	SHC	SHF	P.C.	CA	SHC	SHF	P.C.
20	16	12,672	7,857	0.62	4.00	12,288	7,619	0.62	4.23	11,904	7,380	0.62	4.48
20	18	13,568	6,784	0.50	4.08	13,184	6,592	0.50	4.30	12,736	6,368	0.50	4.60
20	20	14,592	5,545	0.38	4.20	14,272	5,423	0.38	4.40	13,888	5,277	0.38	4.70
22	16	12,672	8,870	0.70	4.00	12,288	8,602	0.70	4.23	11,904	8,333	0.70	4.48
22	18	13,568	7,869	0.58	4.08	13,184	7,647	0.58	4.30	12,736	7,387	0.58	4.60
22	20	14,592	6,712	0.46	4.20	14,272	6,565	0.46	4.40	13,888	6,388	0.46	4.70
24	16	12,672	9,884	0.78	4.00	12,288	9,585	0.78	4.23	11,904	9,285	0.78	4.48
24	18	13,568	8,955	0.66	4.08	13,184	8,701	0.66	4.30	12,736	8,406	0.66	4.60
24	20	14,592	7,880	0.54	4.20	14,272	7,707	0.54	4.40	13,888	7,500	0.54	4.70
26	16	12,672	10,898	0.86	4.00	12,288	10,568	0.86	4.23	11,904	10,237	0.86	4.48
26	18	13,568	10,040	0.74	4.08	13,184	9,756	0.74	4.30	12,736	9,425	0.74	4.60
26	20	14,592	9,047	0.62	4.20	14,272	8,849	0.62	4.40	13,888	8,611	0.62	4.70
28	16	12,672	11,912	0.94	4.00	12,288	11,551	0.94	4.23	11,904	11,190	0.94	4.48
28	18	13,568	11,126	0.82	4.08	13,184	10,811	0.82	4.30	12,736	10,444	0.82	4.60
28	20	14,592	10,214	0.70	4.20	14,272	9,990	0.70	4.40	13,888	9,722	0.70	4.70
30	16	12,672	12,672	1.00	4.00	12,288	12,288	1.00	4.23	11,904	11,904	1.00	4.48
30	18	13,568	12,211	0.90	4.08	13,184	11,866	0.90	4.30	12,736	11,462	0.90	4.60
30	20	14,592	11,382	0.78	4.20	14,272	11,132	0.78	4.40	13,888	10,833	0.78	4.70
32	16	12,672	12,672	1.00	4.00	12,288	12,288	1.00	4.23	11,904	11,904	1.00	4.48
32	18	13,568	13,297	0.98	4.08	13,184	12,920	0.98	4.30	12,736	12,481	0.98	4.60
32	20	14,592	12,549	0.86	4.20	14,272	12,274	0.86	4.40	13,888	11,944	0.86	4.70
34	16	12,672	12,672	1.00	4.00	12,288	12,288	1.00	4.23	11,904	11,904	1.00	4.48
34	18	13,568	13,568	1.00	4.08	13,184	13,184	1.00	4.30	12,736	12,736	1.00	4.60
34	20	14,592	13,716	0.94	4.20	14,272	13,416	0.94	4.40	13,888	13,055	0.94	4.70

NOTE: CA: Capacity (W) SHC: Sensible heat capacity (W)
P.C.: Power consumption (kW) SHF: Sensible heat factor

COOLING CAPACITY (240V)

PLH-P5AAH, PLA-P5AA

CAPACITY : 12,800 W INPUT : 5.00 kW SHF : 0.72

Indoor intake air DB (℃)	Indoor intake air WB (℃)	Outdoor intake air DB (℃)											
		35				40				45			
		CA	SHC	SHF	P.C.	CA	SHC	SHF	P.C.	CA	SHC	SHF	P.C.
20	16	11,392	7,063	0.62	4.80	10,880	6,746	0.62	5.15	10,368	6,428	0.62	5.58
20	18	12,288	6,144	0.50	4.93	11,904	5,952	0.50	5.30	11,136	5,568	0.50	5.70
20	20	13,312	5,059	0.38	5.05	12,800	4,864	0.38	5.40	12,032	4,572	0.38	5.80
22	16	11,392	7,974	0.70	4.80	10,880	7,616	0.70	5.15	10,368	7,258	0.70	5.58
22	18	12,288	7,127	0.58	4.93	11,904	6,904	0.58	5.30	11,136	6,459	0.58	5.70
22	20	13,312	6,124	0.46	5.05	12,800	5,888	0.46	5.40	12,032	5,535	0.46	5.80
24	16	11,392	8,886	0.78	4.80	10,880	8,486	0.78	5.15	10,368	8,087	0.78	5.58
24	18	12,288	8,110	0.66	4.93	11,904	7,857	0.66	5.30	11,136	7,350	0.66	5.70
24	20	13,312	7,188	0.54	5.05	12,800	6,912	0.54	5.40	12,032	6,497	0.54	5.80
26	16	11,392	9,797	0.86	4.80	10,880	9,357	0.86	5.15	10,368	8,916	0.86	5.58
26	18	12,288	9,093	0.74	4.93	11,904	8,809	0.74	5.30	11,136	8,241	0.74	5.70
26	20	13,312	8,253	0.62	5.05	12,800	7,936	0.62	5.40	12,032	7,460	0.62	5.80
28	16	11,392	10,708	0.94	4.80	10,880	10,227	0.94	5.15	10,368	9,746	0.94	5.58
28	18	12,288	10,076	0.82	4.93	11,904	9,761	0.82	5.30	11,136	9,132	0.82	5.70
28	20	13,312	9,318	0.70	5.05	12,800	8,960	0.70	5.40	12,032	8,422	0.70	5.80
30	16	11,392	11,392	1.00	4.80	10,880	10,880	1.00	5.15	10,368	10,368	1.00	5.58
30	18	12,288	11,059	0.90	4.93	11,904	10,714	0.90	5.30	11,136	10,022	0.90	5.70
30	20	13,312	10,383	0.78	5.05	12,800	9,984	0.78	5.40	12,032	9,385	0.78	5.80
32	16	11,392	11,392	1.00	4.80	10,880	10,880	1.00	5.15	10,368	10,368	1.00	5.58
32	18	12,288	12,042	0.98	4.93	11,904	11,666	0.98	5.30	11,136	10,913	0.98	5.70
32	20	13,312	11,448	0.86	5.05	12,800	11,008	0.86	5.40	12,032	10,348	0.86	5.80
34	16	11,392	11,392	1.00	4.80	10,880	10,880	1.00	5.15	10,368	10,368	1.00	5.58
34	18	12,288	12,288	1.00	4.93	11,904	11,904	1.00	5.30	11,136	11,136	1.00	5.70
34	20	13,312	12,513	0.94	5.05	12,800	12,032	0.94	5.40	12,032	11,310	0.94	5.80

NOTE: CA: Capacity (W) SHC: Sensible heat capacity (W)
P.C.: Power consumption (kW) SHF: Sensible heat factor

COOLING CAPACITY (240V)

PLH-P6AAH, PLA-P6AA

CAPACITY : 14,300 W INPUT : 5.94 kW SHF : 0.69

Indoor intake air DB (℃)	Indoor intake air WB (℃)	Outdoor intake air DB (℃)											
		20				25				30			
		CA	SHC	SHF	P.C.	CA	SHC	SHF	P.C.	CA	SHC	SHF	P.C.
20	16	14,157	8,353	0.59	4.82	13,728	8,100	0.59	5.10	13,299	7,846	0.59	5.40
20	18	15,158	7,124	0.47	4.91	14,729	6,923	0.47	5.19	14,229	6,687	0.47	5.55
20	20	16,302	5,706	0.35	5.07	15,945	5,581	0.35	5.31	15,516	5,430	0.35	5.67
22	16	14,157	9,485	0.67	4.82	13,728	9,198	0.67	5.10	13,299	8,910	0.67	5.40
22	18	15,158	8,337	0.55	4.91	14,729	8,101	0.55	5.19	14,229	7,826	0.55	5.55
22	20	16,302	7,010	0.43	5.07	15,945	6,856	0.43	5.31	15,516	6,672	0.43	5.67
24	16	14,157	10,618	0.75	4.82	13,728	10,296	0.75	5.10	13,299	9,974	0.75	5.40
24	18	15,158	9,550	0.63	4.91	14,729	9,279	0.63	5.19	14,229	8,964	0.63	5.55
24	20	16,302	8,314	0.51	5.07	15,945	8,132	0.51	5.31	15,516	7,913	0.51	5.67
26	16	14,157	11,750	0.83	4.82	13,728	11,394	0.83	5.10	13,299	11,038	0.83	5.40
26	18	15,158	10,762	0.71	4.91	14,729	10,458	0.71	5.19	14,229	10,102	0.71	5.55
26	20	16,302	9,618	0.59	5.07	15,945	9,407	0.59	5.31	15,516	9,154	0.59	5.67
28	16	14,157	12,883	0.91	4.82	13,728	12,492	0.91	5.10	13,299	12,102	0.91	5.40
28	18	15,158	11,975	0.79	4.91	14,729	11,636	0.79	5.19	14,229	11,241	0.79	5.55
28	20	16,302	10,922	0.67	5.07	15,945	10,683	0.67	5.31	15,516	10,395	0.67	5.67
30	16	14,157	14,015	0.99	4.82	13,728	13,591	0.99	5.10	13,299	13,166	0.99	5.40
30	18	15,158	13,187	0.87	4.91	14,729	12,814	0.87	5.19	14,229	12,379	0.87	5.55
30	20	16,302	12,227	0.75	5.07	15,945	11,958	0.75	5.31	15,516	11,637	0.75	5.67
32	16	14,157	14,157	1.00	4.82	13,728	13,728	1.00	5.10	13,299	13,299	1.00	5.40
32	18	15,158	14,400	0.95	4.91	14,729	13,993	0.95	5.19	14,229	13,517	0.95	5.55
32	20	16,302	13,531	0.83	5.07	15,945	13,234	0.83	5.31	15,516	12,878	0.83	5.67
34	16	14,157	14,157	1.00	4.82	13,728	13,728	1.00	5.10	13,299	13,299	1.00	5.40
34	18	15,158	15,158	1.00	4.91	14,729	14,729	1.00	5.19	14,229	14,229	1.00	5.55
34	20	16,302	14,835	0.91	5.07	15,945	14,509	0.91	5.31	15,516	14,119	0.91	5.67

NOTE: CA: Capacity (W) SHC: Sensible heat capacity (W)
P.C.: Power consumption (kW) SHF: Sensible heat factor

COOLING CAPACITY (240V)

PLH-P6AAH, PLA-P6AA

CAPACITY : 14,300 W INPUT : 5.94 kW SHF : 0.69

Indoor intake air DB (℃)	Indoor intake air WB (℃)	Outdoor intake air DB (℃)											
		35				40				45			
		CA	SHC	SHF	P.C.	CA	SHC	SHF	P.C.	CA	SHC	SHF	P.C.
20	16	12,727	7,509	0.59	5.79	12,155	7,171	0.59	6.21	11,583	6,834	0.59	6.72
20	18	13,728	6,452	0.47	5.94	13,299	6,251	0.47	6.39	12,441	5,847	0.47	6.87
20	20	14,872	5,205	0.35	6.09	14,300	5,005	0.35	6.51	13,442	4,705	0.35	6.99
22	16	12,727	8,527	0.67	5.79	12,155	8,144	0.67	6.21	11,583	7,761	0.67	6.72
22	18	13,728	7,550	0.55	5.94	13,299	7,314	0.55	6.39	12,441	6,843	0.55	6.87
22	20	14,872	6,395	0.43	6.09	14,300	6,149	0.43	6.51	13,442	5,780	0.43	6.99
24	16	12,727	9,545	0.75	5.79	12,155	9,116	0.75	6.21	11,583	8,687	0.75	6.72
24	18	13,728	8,649	0.63	5.94	13,299	8,378	0.63	6.39	12,441	7,838	0.63	6.87
24	20	14,872	7,585	0.51	6.09	14,300	7,293	0.51	6.51	13,442	6,855	0.51	6.99
26	16	12,727	10,563	0.83	5.79	12,155	10,089	0.83	6.21	11,583	9,614	0.83	6.72
26	18	13,728	9,747	0.71	5.94	13,299	9,442	0.71	6.39	12,441	8,833	0.71	6.87
26	20	14,872	8,774	0.59	6.09	14,300	8,437	0.59	6.51	13,442	7,931	0.59	6.99
28	16	12,727	11,582	0.91	5.79	12,155	11,061	0.91	6.21	11,583	10,541	0.91	6.72
28	18	13,728	10,845	0.79	5.94	13,299	10,506	0.79	6.39	12,441	9,828	0.79	6.87
28	20	14,872	9,964	0.67	6.09	14,300	9,581	0.67	6.51	13,442	9,006	0.67	6.99
30	16	12,727	12,600	0.99	5.79	12,155	12,033	0.99	6.21	11,583	11,467	0.99	6.72
30	18	13,728	11,943	0.87	5.94	13,299	11,570	0.87	6.39	12,441	10,824	0.87	6.87
30	20	14,872	11,154	0.75	6.09	14,300	10,725	0.75	6.51	13,442	10,082	0.75	6.99
32	16	12,727	12,727	1.00	5.79	12,155	12,155	1.00	6.21	11,583	11,583	1.00	6.72
32	18	13,728	13,042	0.95	5.94	13,299	12,634	0.95	6.39	12,441	11,819	0.95	6.87
32	20	14,872	12,344	0.83	6.09	14,300	11,869	0.83	6.51	13,442	11,157	0.83	6.99
34	16	12,727	12,727	1.00	5.79	12,155	12,155	1.00	6.21	11,583	11,583	1.00	6.72
34	18	13,728	13,728	1.00	5.94	13,299	13,299	1.00	6.39	12,441	12,441	1.00	6.87
34	20	14,872	13,534	0.91	6.09	14,300	13,013	0.91	6.51	13,442	12,232	0.91	6.99

NOTE: CA: Capacity (W) SHC: Sensible heat capacity (W)
P.C.: Power consumption (kW) SHF: Sensible heat factor

HEATING CAPACITY (240V)

Model	Indoor intake air DB (℃)	Outdoor intake air WB (℃)					
		-10		-5		0	
		CA	P.C.	CA	P.C.	CA	P.C.
PLH-P3AAH PLA-P3AA	15	5,906	2.07	6,417	2.28	7,161	2.63
	20	5,673	2.24	6,138	2.45	6,789	2.84
	25	5,487	2.38	5,952	2.66	6,510	3.08
PLH-P4AAH PLA-P4AA	15	6,731	2.32	7,314	2.55	8,162	2.95
	20	6,466	2.52	6,996	2.75	7,738	3.18
	25	6,254	2.67	6,784	2.99	7,420	3.46
PLH-P5AAH PLA-P5AA	15	9,462	3.15	10,281	3.47	11,473	4.01
	20	9,089	3.42	9,834	3.74	10,877	4.33
	25	8,791	3.63	9,536	4.06	10,430	4.70
PLH-P6AAH PLA-P6AA	15	10,859	3.75	11,799	4.13	13,167	4.77
	20	10,431	4.07	11,286	4.45	12,483	5.15
	25	10,089	4.32	10,944	4.83	11,970	5.60

Model	Indoor intake air DB (℃)	Outdoor intake air WB (℃)					
		5		10		15	
		CA	P.C.	CA	P.C.	CA	P.C.
PLH-P3AAH PLA-P3AA	15	9,393	3.15	10,602	3.50	11,811	3.78
	20	9,068	3.40	10,230	3.78	11,393	4.06
	25	8,556	3.61	9,858	4.04	10,974	4.36
PLH-P4AAH PLA-P4AA	15	10,706	3.54	12,084	3.93	13,462	4.24
	20	10,335	3.81	11,660	4.24	12,985	4.56
	25	9,752	4.05	11,236	4.54	12,508	4.89
PLH-P5AAH PLA-P5AA	15	15,049	4.81	16,986	5.34	18,923	5.77
	20	14,528	5.18	16,390	5.77	18,253	6.19
	25	13,708	5.50	15,794	6.17	17,582	6.65
PLH-P6AAH PLA-P6AA	15	17,271	5.72	19,494	6.36	21,717	6.87
	20	16,673	6.17	18,810	6.87	20,948	7.38
	25	15,732	6.55	18,126	7.35	20,178	7.92

NOTE: CA: Capacity (W) P.C.: Power consumption (kW)

Cooling capacity correction factors

Models	Refrigerant piping length (one way)									
	5m	10m	15m	20m	25m	30m	35m	40m	45m	50m
P1.6	1.00	0.993	0.984	0.978	0.969	0.961	0.956	0.948	—	—
P2	1.00	0.993	0.984	0.978	0.969	0.961	0.956	0.948	—	—
P2.5	1.00	0.989	0.980	0.970	0.960	0.950	0.940	0.930	0.920	0.910
P3	1.00	0.981	0.968	0.952	0.940	0.925	0.913	0.900	0.886	0.874
P4	1.00	0.989	0.980	0.970	0.960	0.950	0.940	0.930	0.920	0.910
P5	1.00	0.981	0.968	0.952	0.940	0.925	0.913	0.900	0.886	0.874
P6	1.00	0.975	0.955	0.935	0.918	0.900	0.884	0.869	0.855	0.840

Heating capacity correction factors

Models	Refrigerant piping length (one way)									
	5m	10m	15m	20m	25m	30m	35m	40m	45m	50m
P1.6	1.00	0.998	0.995	0.993	0.990	0.988	0.985	0.983	—	—
P2	1.00	0.998	0.995	0.993	0.990	0.988	0.985	0.983	—	—
P2.5	1.00	0.998	0.995	0.993	0.990	0.988	0.985	0.983	0.980	0.978
P3	1.00	0.998	0.995	0.993	0.990	0.988	0.985	0.983	0.980	0.978
P4	1.00	0.998	0.995	0.993	0.990	0.988	0.985	0.983	0.980	0.978
P5	1.00	0.998	0.995	0.993	0.990	0.988	0.985	0.983	0.980	0.978
P6	1.00	0.998	0.955	0.993	0.990	0.988	0.985	0.983	0.980	0.978

Cooling performance curve (50Hz)

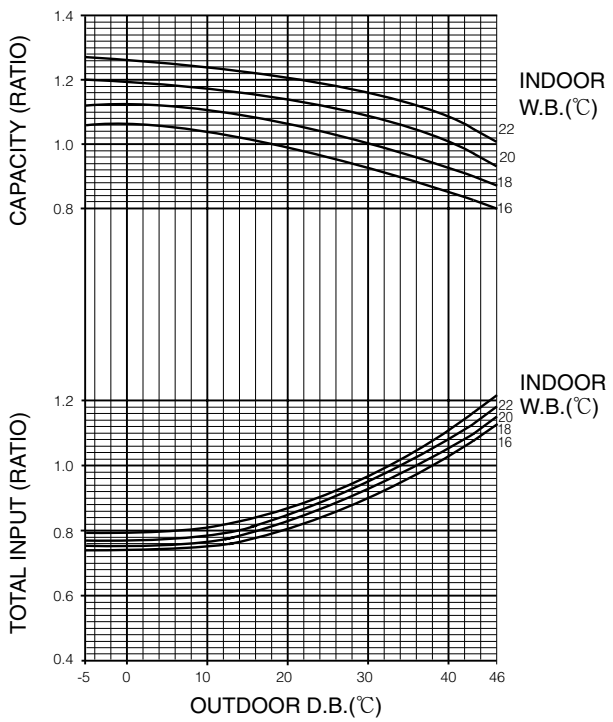

Heating performance curve (50Hz)

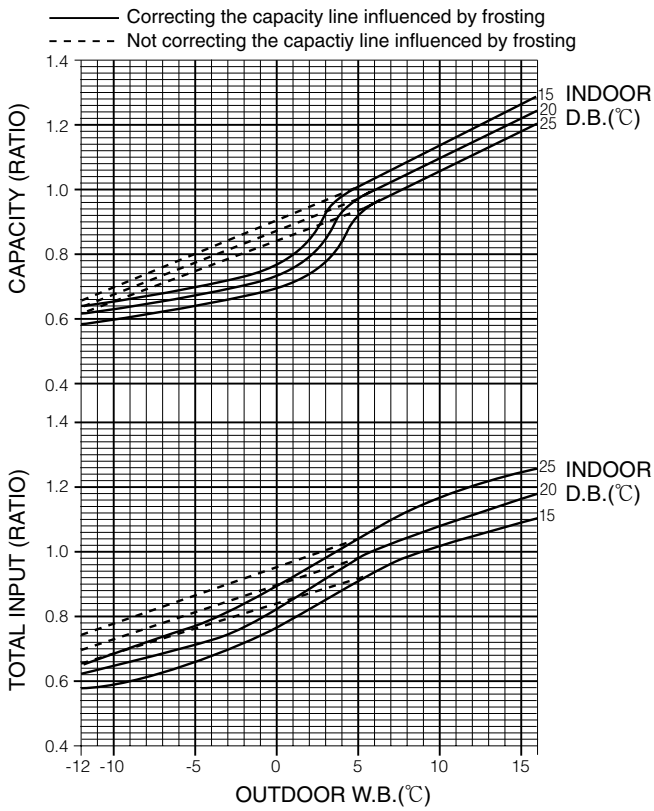

COOLING CAPACITY (240V)

PLH-P1.6KAH, PLA-P1.6KA

CAPACITY : 4,400 W INPUT : 1.82 kW SHF : 0.80

Indoor intake air DB (℃)	Indoor intake air WB (℃)	Outdoor intake air DB (℃)											
		20				25				30			
		CA	SHC	SHF	P.C.	CA	SHC	SHF	P.C.	CA	SHC	SHF	P.C.
20	16	4,356	3,049	0.70	1.46	4,224	2,957	0.70	1.54	4,092	2,864	0.70	1.63
20	18	4,664	2,705	0.58	1.48	4,532	2,629	0.58	1.57	4,378	2,539	0.58	1.67
20	20	5,016	2,307	0.46	1.53	4,906	2,257	0.46	1.60	4,774	2,196	0.46	1.71
22	16	4,356	3,398	0.78	1.46	4,224	3,295	0.78	1.54	4,092	3,192	0.78	1.63
22	18	4,664	3,078	0.66	1.48	4,532	2,991	0.66	1.57	4,378	2,889	0.66	1.67
22	20	5,016	2,709	0.54	1.53	4,906	2,649	0.54	1.60	4,774	2,578	0.54	1.71
24	16	4,356	3,746	0.86	1.46	4,224	3,633	0.86	1.54	4,092	3,519	0.86	1.63
24	18	4,664	3,451	0.74	1.48	4,532	3,354	0.74	1.57	4,378	3,240	0.74	1.67
24	20	5,016	3,110	0.62	1.53	4,906	3,042	0.62	1.60	4,774	2,960	0.62	1.71
26	16	4,356	4,095	0.94	1.46	4,224	3,971	0.94	1.54	4,092	3,846	0.94	1.63
26	18	4,664	3,824	0.82	1.48	4,532	3,716	0.82	1.57	4,378	3,590	0.82	1.67
26	20	5,016	3,511	0.70	1.53	4,906	3,434	0.70	1.60	4,774	3,342	0.70	1.71
28	16	4,356	4,356	1.00	1.46	4,224	4,224	1.00	1.54	4,092	4,092	1.00	1.63
28	18	4,664	4,198	0.90	1.48	4,532	4,079	0.90	1.57	4,378	3,940	0.90	1.67
28	20	5,016	3,912	0.78	1.53	4,906	3,827	0.78	1.60	4,774	3,724	0.78	1.71
30	16	4,356	4,356	1.00	1.46	4,224	4,224	1.00	1.54	4,092	4,092	1.00	1.63
30	18	4,664	4,571	0.98	1.48	4,532	4,441	0.98	1.57	4,378	4,290	0.98	1.67
30	20	5,016	4,314	0.86	1.53	4,906	4,219	0.86	1.60	4,774	4,106	0.86	1.71
32	16	4,356	4,356	1.00	1.46	4,224	4,224	1.00	1.54	4,092	4,092	1.00	1.63
32	18	4,664	4,664	1.00	1.48	4,532	4,532	1.00	1.57	4,378	4,378	1.00	1.67
32	20	5,016	4,715	0.94	1.53	4,906	4,612	0.94	1.60	4,774	4,488	0.94	1.71
34	16	4,356	4,356	1.00	1.46	4,224	4,224	1.00	1.54	4,092	4,092	1.00	1.63
34	18	4,664	4,664	1.00	1.48	4,532	4,532	1.00	1.57	4,378	4,378	1.00	1.67
34	20	5,016	5,016	1.00	1.53	4,906	4,906	1.00	1.60	4,774	4,774	1.00	1.71

NOTE: CA: Capacity (W) SHC: Sensible heat capacity (W)
P.C.: Power consumption (kW) SHF: Sensible heat factor

COOLING CAPACITY (240V)

PLH-P1.6KAH, PLA-P1.6KA

CAPACITY : 4,400 W INPUT : 1.82 kW SHF : 0.80

Indoor intake air DB (℃)	Indoor intake air WB (℃)	Outdoor intake air DB (℃)											
		35				40				45			
		CA	SHC	SHF	P.C.	CA	SHC	SHF	P.C.	CA	SHC	SHF	P.C.
20	16	3,916	2,741	0.70	1.75	3,740	2,618	0.70	1.87	3,564	2,495	0.70	2.03
20	18	4,224	2,450	0.58	1.79	4,092	2,373	0.58	1.93	3,828	2,220	0.58	2.07
20	20	4,576	2,105	0.46	1.84	4,400	2,024	0.46	1.97	4,136	1,903	0.46	2.11
22	16	3,916	3,054	0.78	1.75	3,740	2,917	0.78	1.87	3,564	2,780	0.78	2.03
22	18	4,224	2,788	0.66	1.79	4,092	2,701	0.66	1.93	3,828	2,526	0.66	2.07
22	20	4,576	2,471	0.54	1.84	4,400	2,376	0.54	1.97	4,136	2,233	0.54	2.11
24	16	3,916	3,368	0.86	1.75	3,740	3,216	0.86	1.87	3,564	3,065	0.86	2.03
24	18	4,224	3,126	0.74	1.79	4,092	3,028	0.74	1.93	3,828	2,833	0.74	2.07
24	20	4,576	2,837	0.62	1.84	4,400	2,728	0.62	1.97	4,136	2,564	0.62	2.11
26	16	3,916	3,681	0.94	1.75	3,740	3,516	0.94	1.87	3,564	3,350	0.94	2.03
26	18	4,224	3,464	0.82	1.79	4,092	3,355	0.82	1.93	3,828	3,139	0.82	2.07
26	20	4,576	3,203	0.70	1.84	4,400	3,080	0.70	1.97	4,136	2,895	0.70	2.11
28	16	3,916	3,916	1.00	1.75	3,740	3,740	1.00	1.87	3,564	3,564	1.00	2.03
28	18	4,224	3,802	0.90	1.79	4,092	3,683	0.90	1.93	3,828	3,445	0.90	2.07
28	20	4,576	3,569	0.78	1.84	4,400	3,432	0.78	1.97	4,136	3,226	0.78	2.11
30	16	3,916	3,916	1.00	1.75	3,740	3,740	1.00	1.87	3,564	3,564	1.00	2.03
30	18	4,224	4,140	0.98	1.79	4,092	4,010	0.98	1.93	3,828	3,751	0.98	2.07
30	20	4,576	3,935	0.86	1.84	4,400	3,784	0.86	1.97	4,136	3,557	0.86	2.11
32	16	3,916	3,916	1.00	1.75	3,740	3,740	1.00	1.87	3,564	3,564	1.00	2.03
32	18	4,224	4,224	1.00	1.79	4,092	4,092	1.00	1.93	3,828	3,828	1.00	2.07
32	20	4,576	4,301	0.94	1.84	4,400	4,136	0.94	1.97	4,136	3,888	0.94	2.11
34	16	3,916	3,916	1.00	1.75	3,740	3,740	1.00	1.87	3,564	3,564	1.00	2.03
34	18	4,224	4,224	1.00	1.79	4,092	4,092	1.00	1.93	3,828	3,828	1.00	2.07
34	20	4,576	4,576	1.00	1.84	4,400	4,400	1.00	1.97	4,136	4,136	1.00	2.11

NOTE: CA: Capacity (W) SHC: Sensible heat capacity (W)
P.C.: Power consumption (kW) SHF: Sensible heat factor

COOLING CAPACITY (240V)

PLH-P2KAH, PLA-P2KA

CAPACITY : 5,300 W INPUT : 2.44 kW SHF : 0.74

Indoor intake air DB (℃)	Indoor intake air WB (℃)	Outdoor intake air DB (℃)											
		20				25				30			
		CA	SHC	SHF	P.C.	CA	SHC	SHF	P.C.	CA	SHC	SHF	P.C.
20	16	5,247	3,358	0.64	1.95	5,088	3,256	0.64	2.06	4,929	3,155	0.64	2.18
20	18	5,618	2,921	0.52	1.99	5,459	2,839	0.52	2.10	5,274	2,742	0.52	2.24
20	20	6,042	2,417	0.40	2.05	5,910	2,364	0.40	2.15	5,751	2,300	0.40	2.29
22	16	5,247	3,778	0.72	1.95	5,088	3,663	0.72	2.06	4,929	3,549	0.72	2.18
22	18	5,618	3,371	0.60	1.99	5,459	3,275	0.60	2.10	5,274	3,164	0.60	2.24
22	20	6,042	2,900	0.48	2.05	5,910	2,837	0.48	2.15	5,751	2,760	0.48	2.29
24	16	5,247	4,198	0.80	1.95	5,088	4,070	0.80	2.06	4,929	3,943	0.80	2.18
24	18	5,618	3,820	0.68	1.99	5,459	3,712	0.68	2.10	5,274	3,586	0.68	2.24
24	20	6,042	3,384	0.56	2.05	5,910	3,309	0.56	2.15	5,751	3,220	0.56	2.29
26	16	5,247	4,617	0.88	1.95	5,088	4,477	0.88	2.06	4,929	4,338	0.88	2.18
26	18	5,618	4,270	0.76	1.99	5,459	4,149	0.76	2.10	5,274	4,008	0.76	2.24
26	20	6,042	3,867	0.64	2.05	5,910	3,782	0.64	2.15	5,751	3,680	0.64	2.29
28	16	5,247	5,037	0.96	1.95	5,088	4,884	0.96	2.06	4,929	4,732	0.96	2.18
28	18	5,618	4,719	0.84	1.99	5,459	4,586	0.84	2.10	5,274	4,430	0.84	2.24
28	20	6,042	4,350	0.72	2.05	5,910	4,255	0.72	2.15	5,751	4,140	0.72	2.29
30	16	5,247	5,247	1.00	1.95	5,088	5,088	1.00	2.06	4,929	4,929	1.00	2.18
30	18	5,618	5,169	0.92	1.99	5,459	5,022	0.92	2.10	5,274	4,852	0.92	2.24
30	20	6,042	4,834	0.80	2.05	5,910	4,728	0.80	2.15	5,751	4,600	0.80	2.29
32	16	5,247	5,247	1.00	1.95	5,088	5,088	1.00	2.06	4,929	4,929	1.00	2.18
32	18	5,618	5,618	1.00	1.99	5,459	5,459	1.00	2.10	5,274	5,274	1.00	2.24
32	20	6,042	5,317	0.88	2.05	5,910	5,200	0.88	2.15	5,751	5,060	0.88	2.29
34	16	5,247	5,247	1.00	1.95	5,088	5,088	1.00	2.06	4,929	4,929	1.00	2.18
34	18	5,618	5,618	1.00	1.99	5,459	5,459	1.00	2.10	5,274	5,274	1.00	2.24
34	20	6,042	5,800	0.96	2.05	5,910	5,673	0.96	2.15	5,751	5,520	0.96	2.29

NOTE: CA: Capacity (W) SHC: Sensible heat capacity (W)
P.C.: Power consumption (kW) SHF: Sensible heat factor

COOLING CAPACITY (240V)

PLH-P2KAH, PLA-P2KA

CAPACITY : 5,300 W INPUT : 2.44 kW SHF : 0.74

Indoor intake air DB (℃)	Indoor intake air WB (℃)	Outdoor intake air DB (℃)											
		35				40				45			
		CA	SHC	SHF	P.C.	CA	SHC	SHF	P.C.	CA	SHC	SHF	P.C.
20	16	4,717	3,019	0.64	2.34	4,505	2,883	0.64	2.51	4,293	2,748	0.64	2.72
20	18	5,088	2,646	0.52	2.40	4,929	2,563	0.52	2.59	4,611	2,398	0.52	2.78
20	20	5,512	2,205	0.40	2.46	5,300	2,120	0.40	2.64	4,982	1,993	0.40	2.83
22	16	4,717	3,396	0.72	2.34	4,505	3,244	0.72	2.51	4,293	3,091	0.72	2.72
22	18	5,088	3,053	0.60	2.40	4,929	2,957	0.60	2.59	4,611	2,767	0.60	2.78
22	20	5,512	2,646	0.48	2.46	5,300	2,544	0.48	2.64	4,982	2,391	0.48	2.83
24	16	4,717	3,774	0.80	2.34	4,505	3,604	0.80	2.51	4,293	3,434	0.80	2.72
24	18	5,088	3,460	0.68	2.40	4,929	3,352	0.68	2.59	4,611	3,135	0.68	2.78
24	20	5,512	3,087	0.56	2.46	5,300	2,968	0.56	2.64	4,982	2,790	0.56	2.83
26	16	4,717	4,151	0.88	2.34	4,505	3,964	0.88	2.51	4,293	3,778	0.88	2.72
26	18	5,088	3,867	0.76	2.40	4,929	3,746	0.76	2.59	4,611	3,504	0.76	2.78
26	20	5,512	3,528	0.64	2.46	5,300	3,392	0.64	2.64	4,982	3,188	0.64	2.83
28	16	4,717	4,528	0.96	2.34	4,505	4,325	0.96	2.51	4,293	4,121	0.96	2.72
28	18	5,088	4,274	0.84	2.40	4,929	4,140	0.84	2.59	4,611	3,873	0.84	2.78
28	20	5,512	3,969	0.72	2.46	5,300	3,816	0.72	2.64	4,982	3,587	0.72	2.83
30	16	4,717	4,717	1.00	2.34	4,505	4,505	1.00	2.51	4,293	4,293	1.00	2.72
30	18	5,088	4,681	0.92	2.40	4,929	4,535	0.92	2.59	4,611	4,242	0.92	2.78
30	20	5,512	4,410	0.80	2.46	5,300	4,240	0.80	2.64	4,982	3,986	0.80	2.83
32	16	4,717	4,717	1.00	2.34	4,505	4,505	1.00	2.51	4,293	4,293	1.00	2.72
32	18	5,088	5,088	1.00	2.40	4,929	4,929	1.00	2.59	4,611	4,611	1.00	2.78
32	20	5,512	4,851	0.88	2.46	5,300	4,664	0.88	2.64	4,982	4,384	0.88	2.83
34	16	4,717	4,717	1.00	2.34	4,505	4,505	1.00	2.51	4,293	4,293	1.00	2.72
34	18	5,088	5,088	1.00	2.40	4,929	4,929	1.00	2.59	4,611	4,611	1.00	2.78
34	20	5,512	5,292	0.96	2.46	5,300	5,088	0.96	2.64	4,982	4,783	0.96	2.83

NOTE: CA: Capacity (W) SHC: Sensible heat capacity (W)
P.C.: Power consumption (kW) SHF: Sensible heat factor

COOLING CAPACITY (240V)

PLH-P2.5KAH, PLA-P2.5KA

CAPACITY : 6,300 W INPUT : 2.63 kW SHF : 0.75

Indoor intake air DB (℃)	Indoor intake air WB (℃)	Outdoor intake air DB (℃)											
		20				25				30			
		CA	SHC	SHF	P.C.	CA	SHC	SHF	P.C.	CA	SHC	SHF	P.C.
20	16	6,237	4,054	0.65	2.10	6,048	3,931	0.65	2.22	5,859	3,808	0.65	2.35
20	18	6,678	3,539	0.53	2.14	6,489	3,439	0.53	2.26	6,269	3,322	0.53	2.42
20	20	7,182	2,945	0.41	2.21	7,025	2,880	0.41	2.31	6,836	2,803	0.41	2.47
22	16	6,237	4,553	0.73	2.10	6,048	4,415	0.73	2.22	5,859	4,277	0.73	2.35
22	18	6,678	4,074	0.61	2.14	6,489	3,958	0.61	2.26	6,269	3,824	0.61	2.42
22	20	7,182	3,519	0.49	2.21	7,025	3,442	0.49	2.31	6,836	3,349	0.49	2.47
24	16	6,237	5,052	0.81	2.10	6,048	4,899	0.81	2.22	5,859	4,746	0.81	2.35
24	18	6,678	4,608	0.69	2.14	6,489	4,477	0.69	2.26	6,269	4,325	0.69	2.42
24	20	7,182	4,094	0.57	2.21	7,025	4,004	0.57	2.31	6,836	3,896	0.57	2.47
26	16	6,237	5,551	0.89	2.10	6,048	5,383	0.89	2.22	5,859	5,215	0.89	2.35
26	18	6,678	5,142	0.77	2.14	6,489	4,997	0.77	2.26	6,269	4,827	0.77	2.42
26	20	7,182	4,668	0.65	2.21	7,025	4,566	0.65	2.31	6,836	4,443	0.65	2.47
28	16	6,237	6,050	0.97	2.10	6,048	5,867	0.97	2.22	5,859	5,683	0.97	2.35
28	18	6,678	5,676	0.85	2.14	6,489	5,516	0.85	2.26	6,269	5,328	0.85	2.42
28	20	7,182	5,243	0.73	2.21	7,025	5,128	0.73	2.31	6,836	4,990	0.73	2.47
30	16	6,237	6,237	1.00	2.10	6,048	6,048	1.00	2.22	5,859	5,859	1.00	2.35
30	18	6,678	6,211	0.93	2.14	6,489	6,035	0.93	2.26	6,269	5,830	0.93	2.42
30	20	7,182	5,817	0.81	2.21	7,025	5,690	0.81	2.31	6,836	5,537	0.81	2.47
32	16	6,237	6,237	1.00	2.10	6,048	6,048	1.00	2.22	5,859	5,859	1.00	2.35
32	18	6,678	6,678	1.00	2.14	6,489	6,489	1.00	2.26	6,269	6,269	1.00	2.42
32	20	7,182	6,392	0.89	2.21	7,025	6,252	0.89	2.31	6,836	6,084	0.89	2.47
34	16	6,237	6,237	1.00	2.10	6,048	6,048	1.00	2.22	5,859	5,859	1.00	2.35
34	18	6,678	6,678	1.00	2.14	6,489	6,489	1.00	2.26	6,269	6,269	1.00	2.42
34	20	7,182	6,967	0.97	2.21	7,025	6,814	0.97	2.31	6,836	6,630	0.97	2.47

NOTE: CA: Capacity (W) SHC: Sensible heat capacity (W)
P.C.: Power consumption (kW) SHF: Sensible heat factor

COOLING CAPACITY (240V)

PLH-P2.5KAH, PLA-P2.5KA

CAPACITY : 6,300 W INPUT : 2.63 kW SHF : 0.75

Indoor intake air DB (℃)	Indoor intake air WB (℃)	Outdoor intake air DB (℃)											
		35				40				45			
		CA	SHC	SHF	P.C.	CA	SHC	SHF	P.C.	CA	SHC	SHF	P.C.
20	16	5,607	3,645	0.65	2.52	5,355	3,481	0.65	2.71	5,103	3,317	0.65	2.93
20	18	6,048	3,205	0.53	2.59	5,859	3,105	0.53	2.79	5,481	2,905	0.53	3.00
20	20	6,552	2,666	0.41	2.66	6,300	2,583	0.41	2.84	5,922	2,428	0.41	3.05
22	16	5,607	4,093	0.73	2.52	5,355	3,909	0.73	2.71	5,103	3,725	0.73	2.93
22	18	6,048	3,689	0.61	2.59	5,859	3,574	0.61	2.79	5,481	3,343	0.61	3.00
22	20	6,552	3,201	0.49	2.66	6,300	3,087	0.49	2.84	5,922	2,902	0.49	3.05
24	16	5,607	4,542	0.81	2.52	5,355	4,338	0.81	2.71	5,103	4,133	0.81	2.93
24	18	6,048	4,173	0.69	2.59	5,859	4,043	0.69	2.79	5,481	3,782	0.69	3.00
24	20	6,552	3,735	0.57	2.66	6,300	3,591	0.57	2.84	5,922	3,376	0.57	3.05
26	16	5,607	4,990	0.89	2.52	5,355	4,766	0.89	2.71	5,103	4,542	0.89	2.93
26	18	6,048	4,657	0.77	2.59	5,859	4,511	0.77	2.79	5,481	4,220	0.77	3.00
26	20	6,552	4,259	0.65	2.66	6,300	4,095	0.65	2.84	5,922	3,849	0.65	3.05
28	16	5,607	5,439	0.97	2.52	5,355	5,194	0.97	2.71	5,103	4,950	0.97	2.93
28	18	6,048	5,141	0.85	2.59	5,859	4,980	0.85	2.79	5,481	4,659	0.85	3.00
28	20	6,552	4,783	0.73	2.66	6,300	4,599	0.73	2.84	5,922	4,323	0.73	3.05
30	16	5,607	5,607	1.00	2.52	5,355	5,355	1.00	2.71	5,103	5,103	1.00	2.93
30	18	6,048	5,625	0.93	2.59	5,859	5,449	0.93	2.79	5,481	5,097	0.93	3.00
30	20	6,552	5,307	0.81	2.66	6,300	5,103	0.81	2.84	5,922	4,797	0.81	3.05
32	16	5,607	5,607	1.00	2.52	5,355	5,355	1.00	2.71	5,103	5,103	1.00	2.93
32	18	6,048	6,048	1.00	2.59	5,859	5,859	1.00	2.79	5,481	5,481	1.00	3.00
32	20	6,552	5,831	0.89	2.66	6,300	5,607	0.89	2.84	5,922	5,271	0.89	3.05
34	16	5,607	5,607	1.00	2.52	5,355	5,355	1.00	2.71	5,103	5,103	1.00	2.93
34	18	6,048	6,048	1.00	2.59	5,859	5,859	1.00	2.79	5,481	5,481	1.00	3.00
34	20	6,552	6,355	0.97	2.66	6,300	6,111	0.97	2.84	5,922	5,744	0.97	3.05

NOTE: CA: Capacity (W) SHC: Sensible heat capacity (W)
P.C.: Power consumption (kW) SHF: Sensible heat factor

HEATING CAPACITY (240V)

Model	Indoor intake air DB (℃)	Outdoor intake air WB (℃)					
		-10		-5		0	
		CA	P.C.	CA	P.C.	CA	P.C.
PLH-P1.6KAH PLA-P1.6KA	15	3,175	1.12	3,450	1.23	3,850	1.42
	20	3,050	1.21	3,300	1.32	3,650	1.53
	25	2,950	1.29	3,200	1.44	3,500	1.66
PLH-P2KAH PLA-P2KA	15	3,778	1.42	4,106	1.56	4,582	1.80
	20	3,630	1.54	3,927	1.68	4,344	1.94
	25	3,511	1.63	3,808	1.82	4,165	2.11
PLH-P2.5KAH PLA-P2.5KA	15	4,699	1.52	5,106	1.67	5,698	1.93
	20	4,514	1.64	4,884	1.80	5,402	2.08
	25	4,366	1.75	4,736	1.95	5,180	2.26

Model	Indoor intake air DB (℃)	Outdoor intake air WB (℃)					
		5		10		15	
		CA	P.C.	CA	P.C.	CA	P.C.
PLH-P1.6KAH PLA-P1.6KA	15	5,050	1.70	5,700	1.89	6,350	2.04
	20	4,875	1.83	5,500	2.04	6,125	2.19
	25	4,600	1.95	5,300	2.18	5,900	2.35
PLH-P2KAH PLA-P2KA	15	6,010	2.16	6,783	2.40	7,557	2.59
	20	5,801	2.33	6,545	2.59	7,289	2.78
	25	5,474	2.47	6,307	2.77	7,021	2.99
PLH-P2.5KAH PLA-P2.5KA	15	7,474	2.31	8,436	2.57	9,398	2.78
	20	7,215	2.49	8,140	2.78	9,065	2.98
	25	6,808	2.65	7,844	2.97	8,732	3.20

NOTE: CA: Capacity (W) P.C.: Power consumption (kW)

Cooling capacity correction factors

Models	Refrigerant piping length (one way)									
	5m	10m	15m	20m	25m	30m	35m	40m	45m	50m
P1.6	1.00	0.993	0.984	0.978	0.969	0.961	0.956	0.948	—	—
P2	1.00	0.993	0.984	0.978	0.969	0.961	0.956	0.948	—	—
P2.5	1.00	0.989	0.980	0.970	0.960	0.950	0.940	0.930	0.920	0.910
P3	1.00	0.981	0.968	0.952	0.940	0.925	0.913	0.900	0.886	0.874
P4	1.00	0.989	0.980	0.970	0.960	0.950	0.940	0.930	0.920	0.910
P5	1.00	0.981	0.968	0.952	0.940	0.925	0.913	0.900	0.886	0.874
P6	1.00	0.975	0.955	0.935	0.918	0.900	0.884	0.869	0.855	0.840

Heating capacity correction factors

Models	Refrigerant piping length (one way)									
	5m	10m	15m	20m	25m	30m	35m	40m	45m	50m
P1.6	1.00	0.998	0.995	0.993	0.990	0.988	0.985	0.983	—	—
P2	1.00	0.998	0.995	0.993	0.990	0.988	0.985	0.983	—	—
P2.5	1.00	0.998	0.995	0.993	0.990	0.988	0.985	0.983	0.980	0.978
P3	1.00	0.998	0.995	0.993	0.990	0.988	0.985	0.983	0.980	0.978
P4	1.00	0.998	0.995	0.993	0.990	0.988	0.985	0.983	0.980	0.978
P5	1.00	0.998	0.995	0.993	0.990	0.988	0.985	0.983	0.980	0.978
P6	1.00	0.998	0.955	0.993	0.990	0.988	0.985	0.983	0.980	0.978

Cooling performance curve (50Hz)

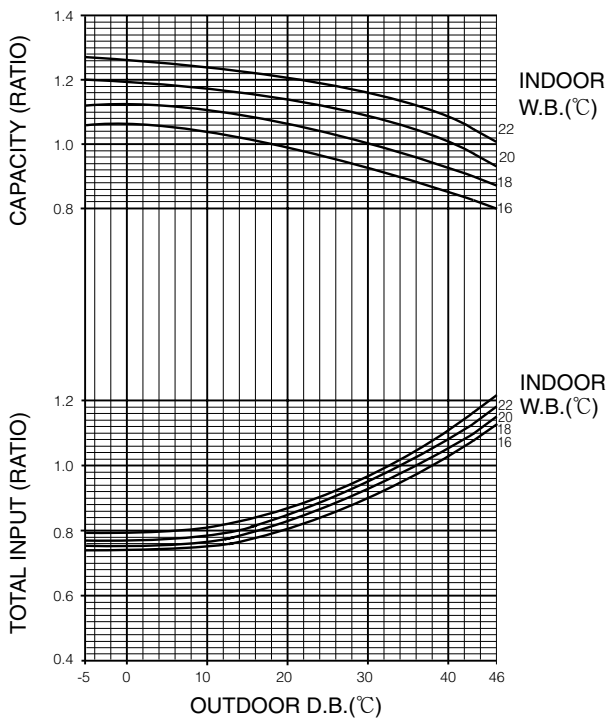

Heating performance curve (50Hz)

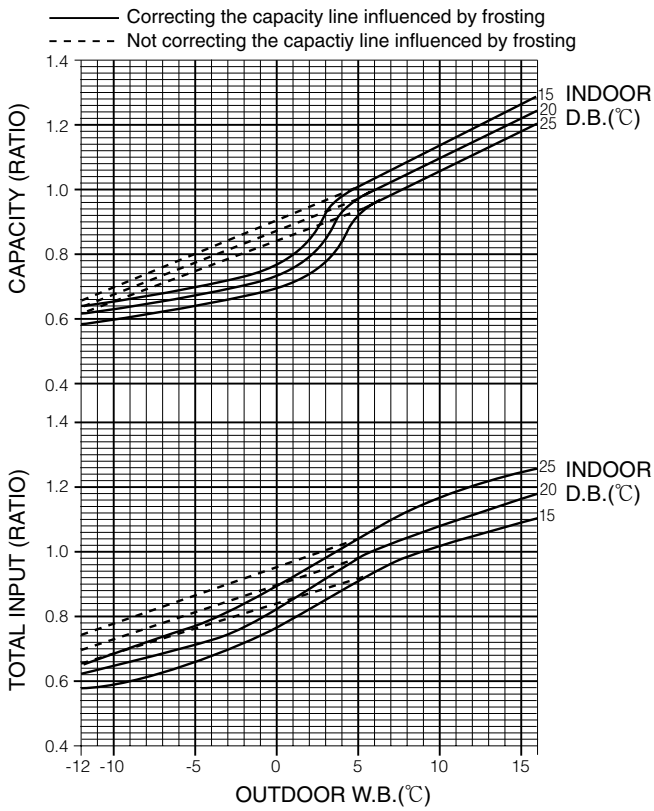

A.1.8 FRESH AIR INTAKE AMOUNT

1. Adjusting the width of the air outlets

- **Change of outlet numbers**
  [The optional air outlet shutter is necessary.]

  To change the air outlet numbers to 3-, or 2-way outlet, the outlets should be closed with the optional air outlet shutter.)

  (When the air outlets are closed, close the vane by removing the vane connector.)

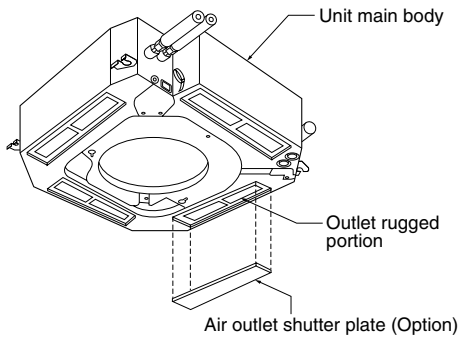

- **For the portion to be cut (V-shaped groove), see the figure below (as seen from the rear of the panel).**

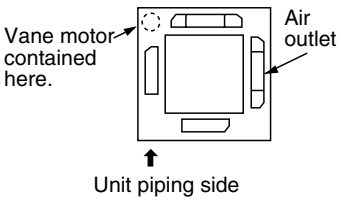

2. Fresh air intake (Installation of site)

- By mounting the optional multi-function casement to the indoor unit main body, and mounting the duct and duct flange (field supply) onto it further, fresh exterior air intake can be accomplished.
  (The mounting of the multi-function casement increases the height of the ceiling plenum by 135mm.)

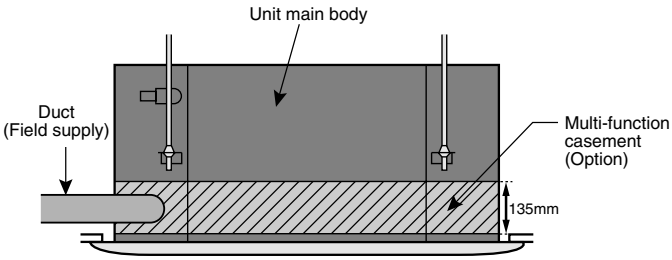

Direct exterior air intake into the main body is also possible.

Knockout hole for fresh air intake

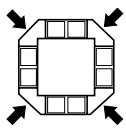

Preparation of knockout hole

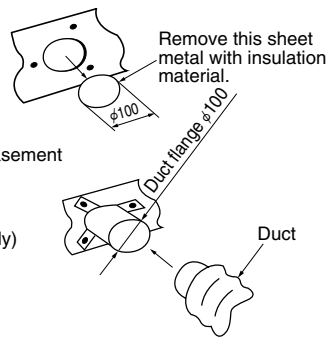

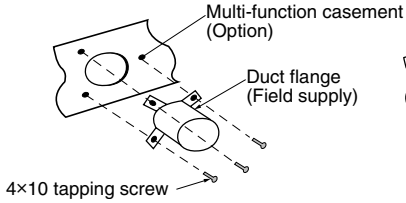

3. Fresh air intake volume & static pressure characteristics

① PLH-P3AAH
(at using of multi-function casement, standard filter)

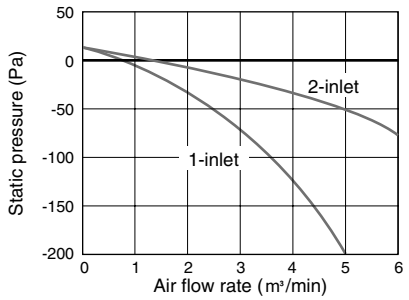

② PLH-P3AAH (Direct intake to unit)

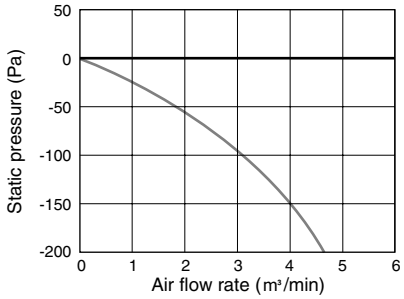

③ PLH-P4/P5/P6AAH
(at using of multi-function casement, standard filter)

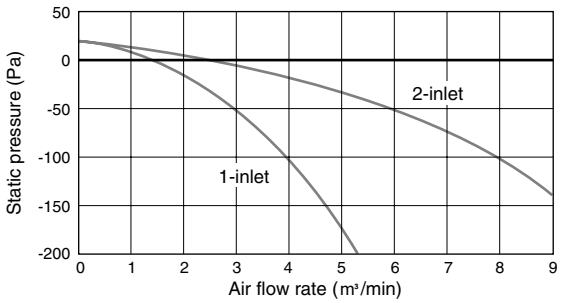

④ PLH-P4/P5/P6AAH (Direct intake to unit)

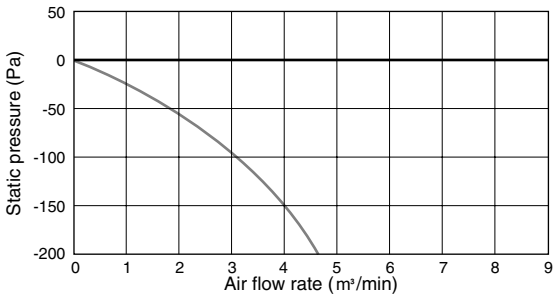

How to read the chart

(1)

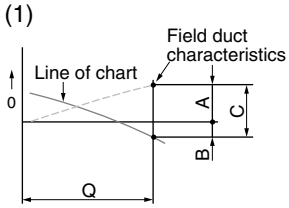

(2)

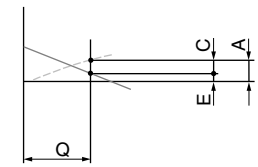

(3)

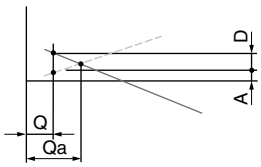

Q .... Design fresh air intake volume (m³/min)

A ..... Static pressure loss [Pa] of fesh air intake duct at air flow rate of Q

B ..... Required boost pressure [Pa] of air conditioner inlet at air flow rate of Q

C ..... Required static pressure [Pa] of booster fan at air flow rate of Q

D ..... Required compensation [Pa] for static prssure loss of fresh air intake duct to make air flow rate Q

E ..... Static pressure [Pa] of indoor unit at air flow rate of Q

Qa .. Estimated fresh air intake [m³/min] without compensation of D

A.1.9 BRANCH DUCT (Installation at site)

PLH-P3AAH, PLH-P4AAH, PLH-P5AAH, PLH-P6AAH PLA-P3AA, PLA-P4AA, PLA-P5AA, PLA-P6AA

To be compatible with both round and rectangular branch ducts, knockout holes are designed to fit to both shapes for flexible on-site installation.

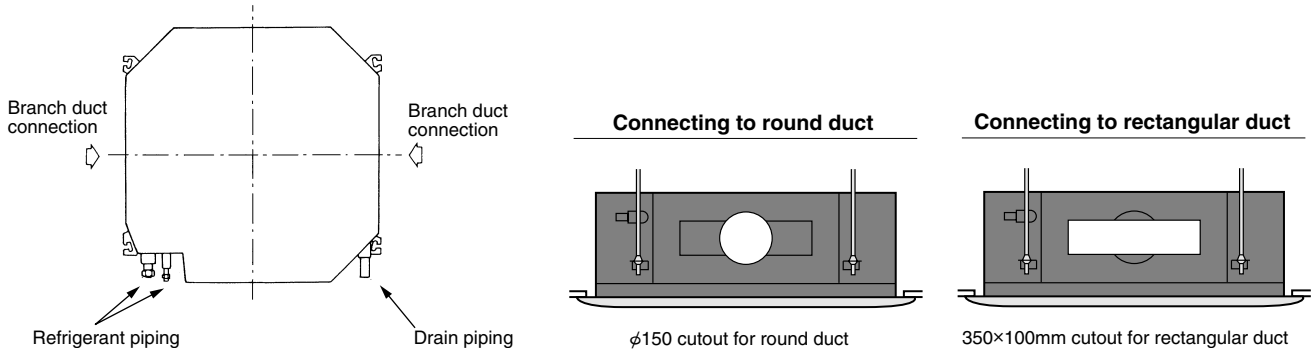

1. Branch duct air flow rate/static pressure charcteristics
PLH-P3AAH 4- or 3-way air flow
(Please inquire for 2-way air flow and other capacity range other than PLH-P3AAH.)

4-way air flow (horizontal vane) / Rectangular duct

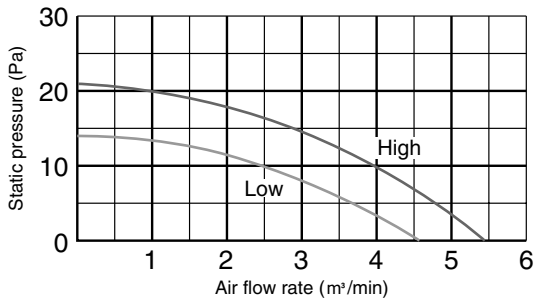

4-way air flow (horizontal vane) / Round duct

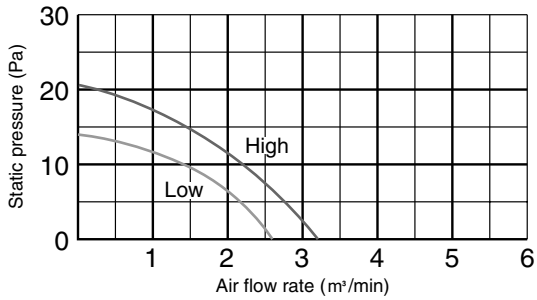

3-way air flow (horizontal vane) / Rectangular duct

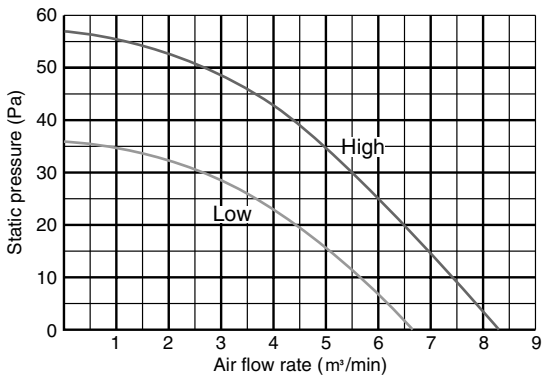

3-way air flow (horizontal vane) / Round duct

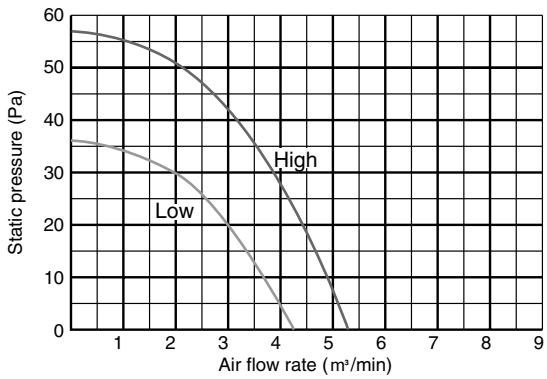

A.1.10 NOISE CRITERION CURVES

Ambient temperature 27℃

Test conditions are based on JIS Z8731

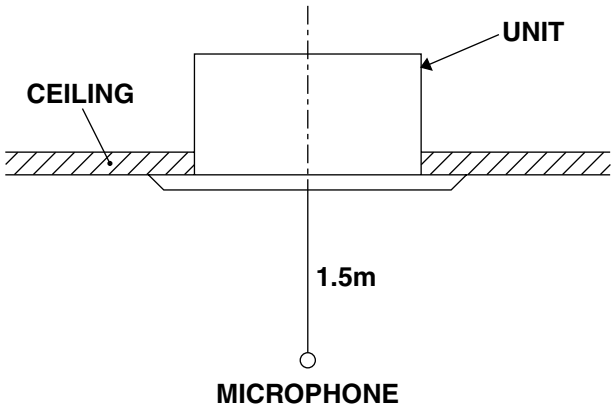

PLH-P1.6/P2KAH
PLA-P1.6/P2KA

NOTCH	SPL(dB)	LINE
Hi	37	○——○
Mi1	35.5	△——△
Mi2	34	●——●
Lo	32	▲——▲

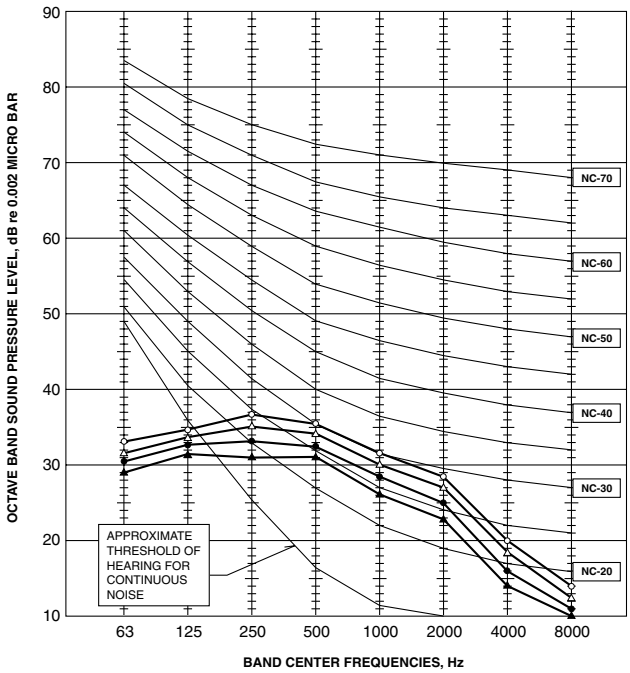

PLH-P2.5KAH
PLA-P2.5KA

NOTCH	SPL(dB)	LINE
Hi	39.5	○——○
Mi1	38	△——△
Mi2	36.5	●——●
Lo	35	▲——▲

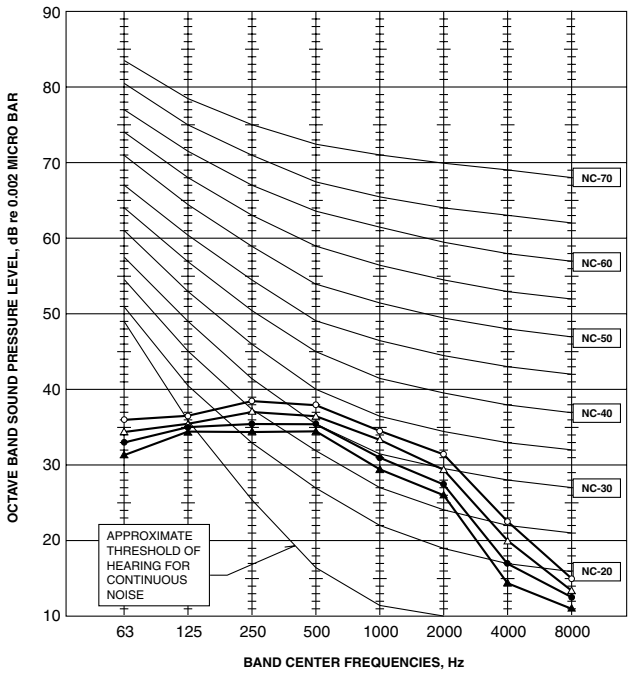

PLH-P3AAH
PLA-P3AA

NOTCH	SPL(dB)	LINE
Hi	34	○——○
Mi1	32	△——△
Mi2	30	●——●
Lo	28	▲——▲

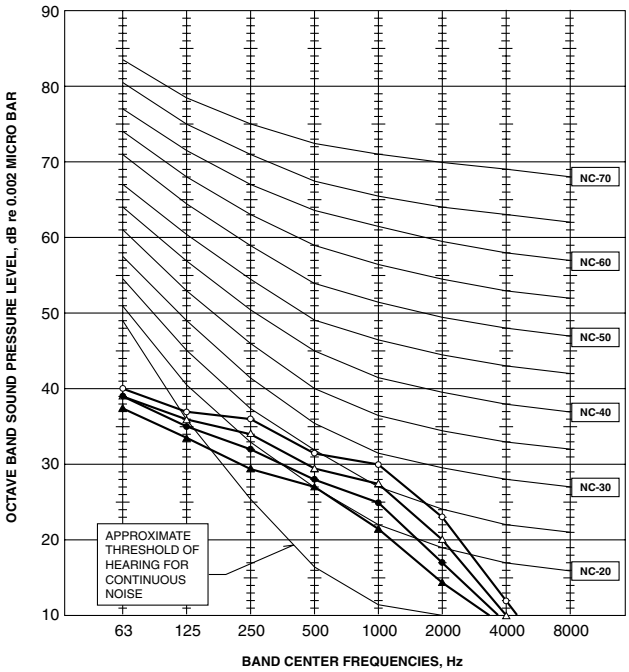

PLH-P4AAH
PLA-P4AA

NOTCH	SPL(dB)	LINE
Hi	41	○——○
Mi1	39	△——△
Mi2	36	●——●
Lo	33	▲——▲

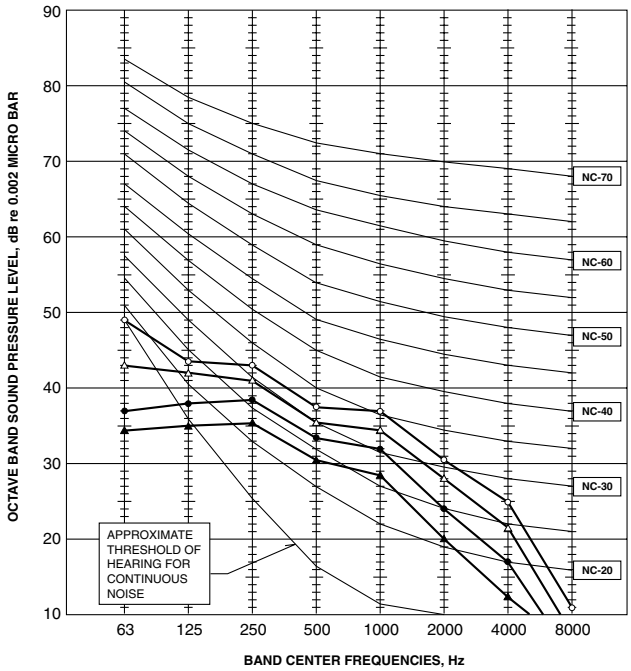

PLH-P5AAH
PLA-P5AA

NOTCH	SPL(dB)	LINE
Hi	43	○——○
Mi1	41	△——△
Mi2	38	●——●
Lo	35	▲——▲

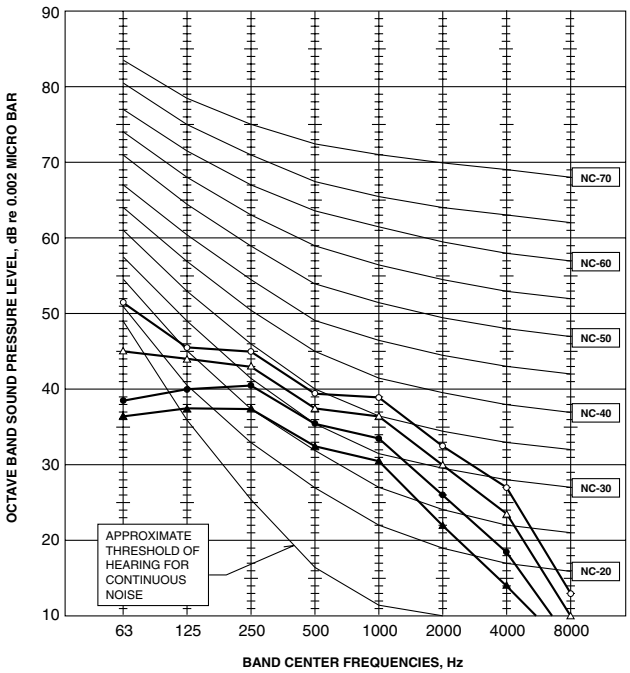

PLH-P6AAH
PLA-P6AA

NOTCH	SPL(dB)	LINE
Hi	45	○——○
Mi1	43	△——△
Mi2	40	●——●
Lo	37	▲——▲

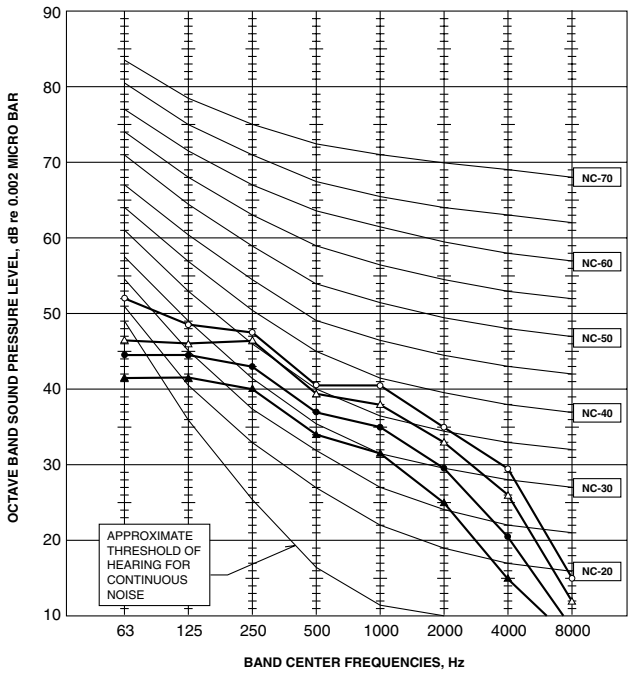

A.1.11 TEMPERATURE AND AIR FLOW DISTRIBUTIONS

PLH-P3AAH, PLA-P3AA

Temperature distribution

<Heating mode> Standard
Flow angle : 70° 4-way flow
Notch : Hi Ceiling height : 2.7 m

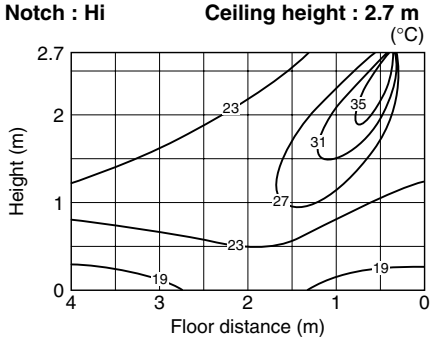

<Heating mode> Standard
Flow angle : 55° 4-way flow
Notch : Hi Ceiling height : 2.7 m

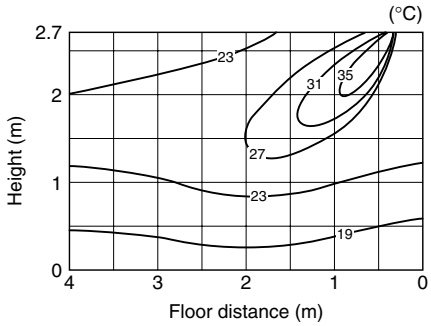

<Heating mode> Standard
Flow angle : 45° 4-way flow
Notch : Hi Ceiling height : 2.7 m

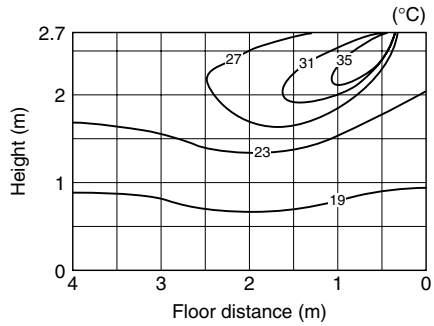

<Heating mode> Standard
Flow angle : 30° 4-way flow
Notch : Hi Ceiling height : 2.7 m

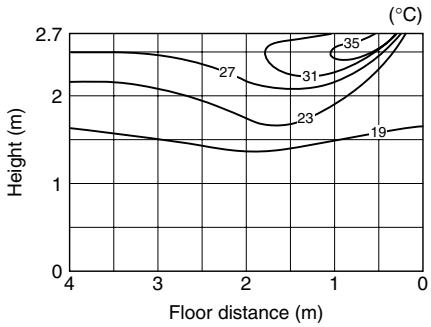

<Heating mode> High ceiling 2
Flow angle : 70° 4-way flow
Notch : Hi Ceiling height : 3.5 m

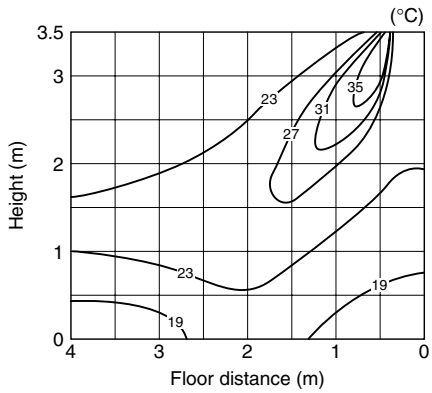

<Heating mode> Standard
Flow angle : 70° 3-way flow
Notch : Hi Ceiling height : 3.0 m

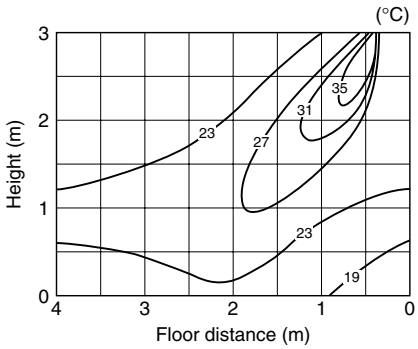

<Heating mode> Standard
Flow angle : 70° 2-way flow
Notch : Hi Ceiling height : 3.3 m

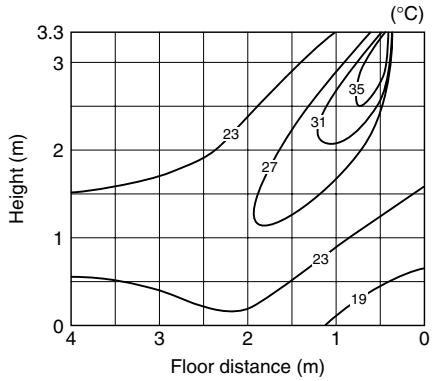

<Cooling mode> Standard
Flow angle : 70° 4-way flow
Notch : Hi Ceiling height : 2.7 m

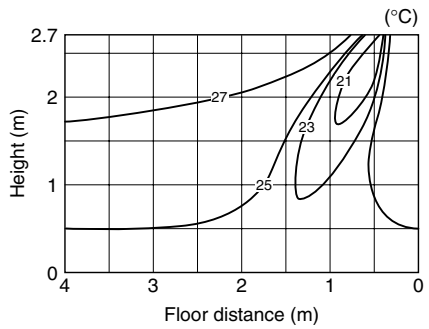

<Cooling mode> Standard
Flow angle : 30° 4-way flow
Notch : Hi Ceiling height : 2.7 m

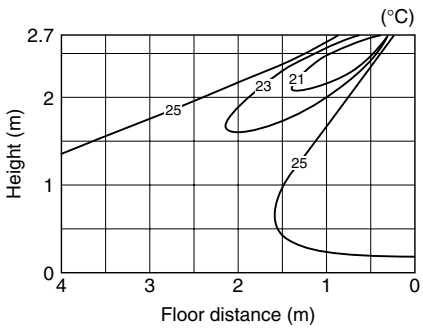

Air flow distribution

<Fan mode> Standard
Flow angle : 70°
4-way flow
Notch : Hi
Ceiling height : 2.7 m

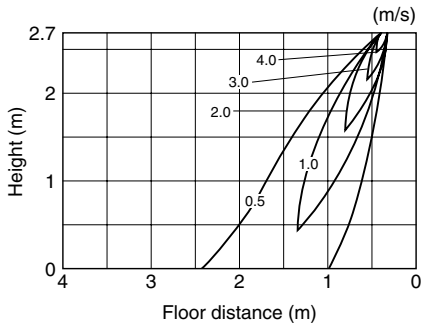

<Fan mode> Standard
Flow angle : 30°
4-way flow
Notch : Hi
Ceiling height : 2.7 m

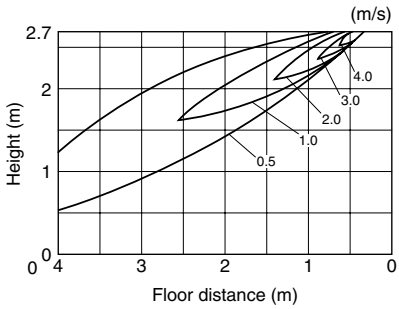

<Fan mode> High ceiling 2
Flow angle : 70°
4-way flow
Notch : Hi
Ceiling height : 3.5 m

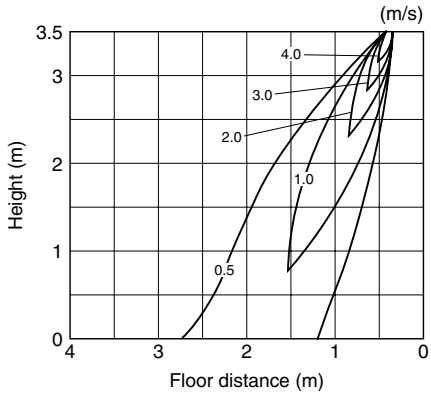

<Fan mode> Standard
Flow angle : 70°
3-way flow
Notch : Hi
Ceiling height : 3.0 m

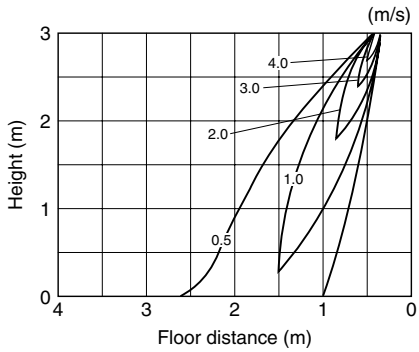

<Fan mode> Standard
Flow angle : 70°
2-way flow
Notch : Hi
Ceiling height : 3.3 m

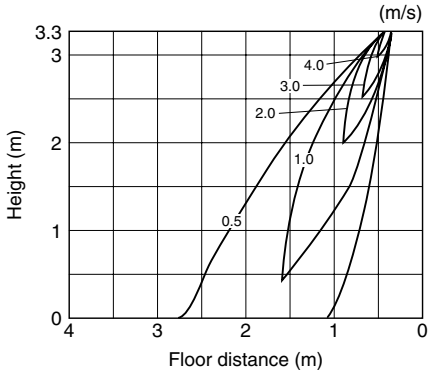

PLH-P5AAH, PLA-P5AA

Temperature distribution

<Heating mode> **Standard**
Flow angle : 70° **4-way flow**
Notch : Hi **Ceiling height : 2.7 m**

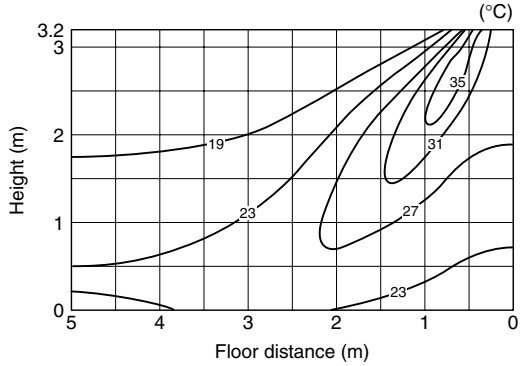

<Heating mode> **Standard**
Flow angle : 70° **4-way flow**
Notch : Hi **Ceiling height : 2.7 m**

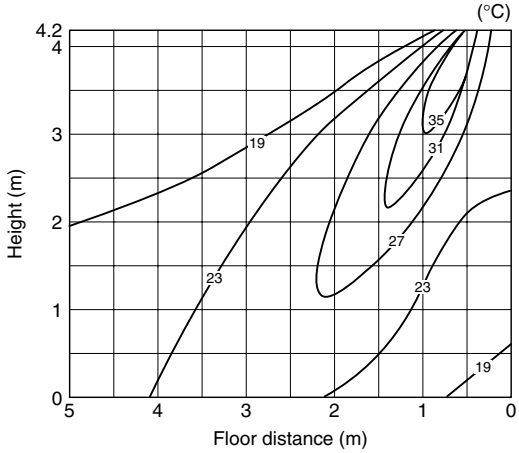

<Fan mode> **Standard**
Flow angle : 70° **4-way flow**
Notch : Hi **Ceiling height : 3.2 m**

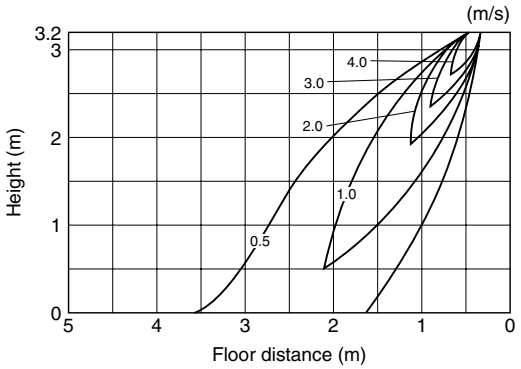

<Fan mode> **High ceiling 2**
Flow angle : 70° **4-way flow**
Notch : Hi **Ceiling height : 4.2 m**

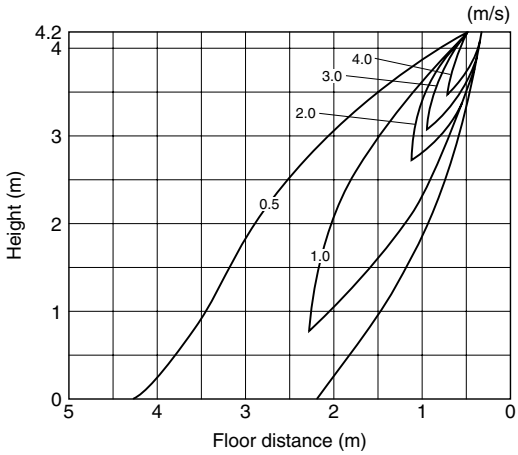

A.1.12 OUTLET AIR SPEED AND COVERAGE RANGE

MODEL	Air flow (m^3/min)	Air speed (m/sec)	Converage (m)
PLH-P3AAH	20	4.0	5.7
PLH-P4AAH	28	4.9	7.4
PLH-P5AAH	30	5.2	7.9
PLH-P6AAH	30	6.6	8.9
PLH-P1.6KAH	16	5.6	6.0
PLH-P2KAH	16	5.6	6.0
PLH-P2.5KAH	17	5.9	6.4
PLA-P3AA	20	4.0	5.7
PLA-P4AA	28	4.9	7.4
PLA-P5AA	30	5.2	7.9
PLA-P6AA	30	6.6	8.9
PLA-P1.6KA	16	5.6	6.0
PLA-P2KA	16	5.6	6.0
PLA-P2.5KA	17	5.9	6.4

A.1.13 REMOTE CONTROLLER

A.1.13.1 Wired Remote Controller

Once the controls are set, the same operation mode can be repeated by simply pressing the ON/OFF button.

● Operation buttons

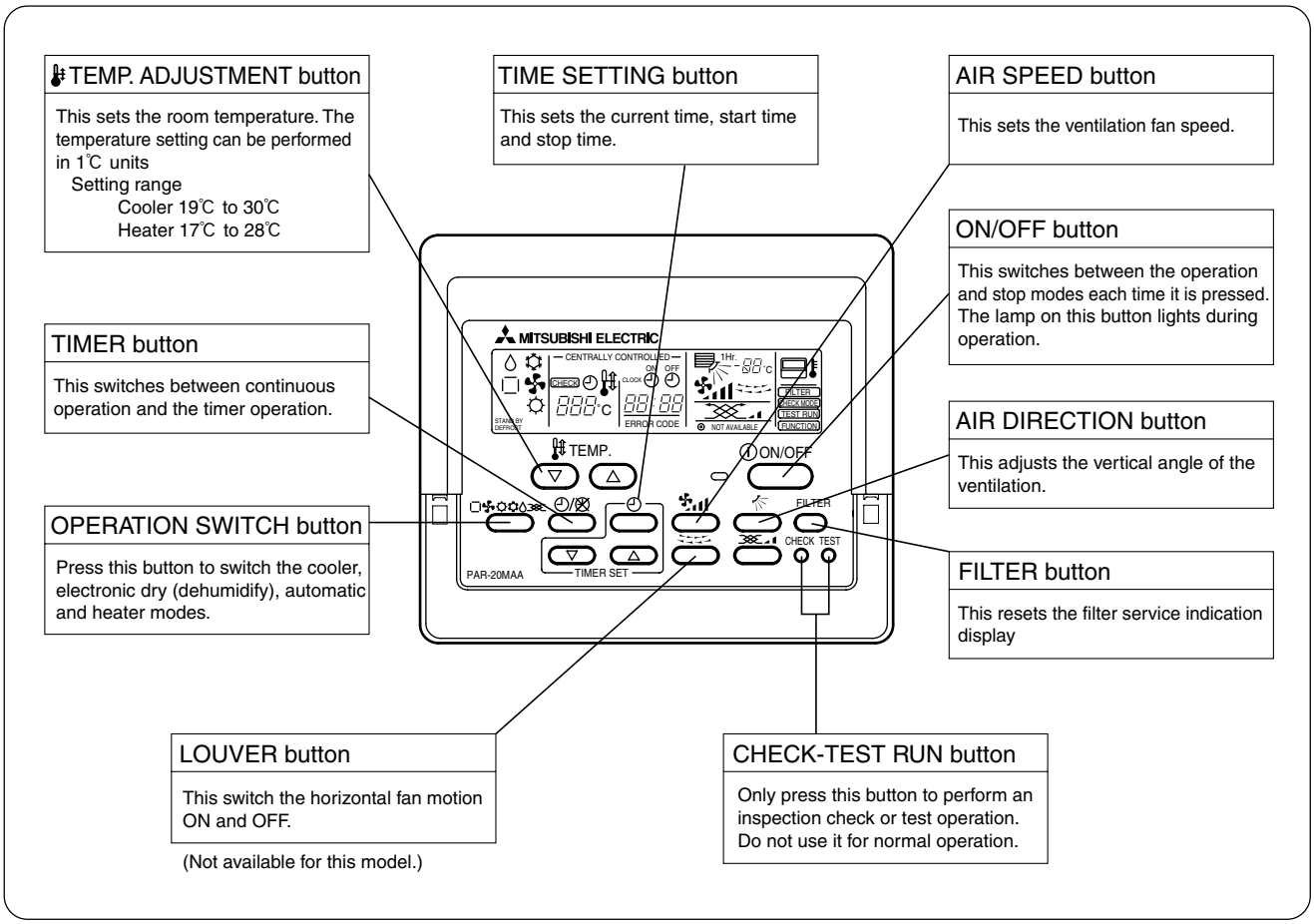

● Display

In this display example on the bottom left, a condition where all display lamps light is shown for explanation purposes although this differs from actual operation.

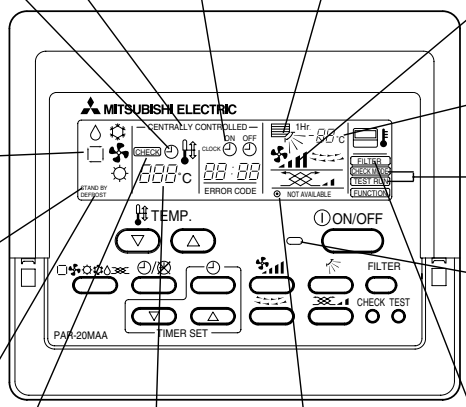

CENTRALLY CONTROLLED display

This indicates when the unit is controlled by optional features such as central control type remote controller.

CLOCK display

The current time, start time and stop time can be displayed in ten second intervals by pressing the time switch button. The start time or stop time is always displayed during the timer operation.

AIR DIRECTION display

This displays the air direction.

TIMER display

This indicates when the continuous operation and time operation modes are set.
It also display the time for the timer operation at the same time as when it is set.

AIR SPEED display

The selected fan speed is displayed.

ROOM TEMPERATURE display

The temperature of the suction air is displayed during operation. The display range is 8℃ to 39℃. The display flashes 8℃ when the actual temperature is less than 8℃ and flashes 39℃ when the actual temperature is greater than 39℃.

OPERATION MODE display

This indicates the operation mode.

STANDBY display

The [STANDBY] symbol is only displayed from the time the heating operation starts unit the heated air begins to blow.

Operation lamp

This lamp lights during operation, goes off when the unit stops and flashes when a malfunction occurs.

CHECK MODE / TEST RUN display

This display lights in the check mode or when a test operation is performed.

DEFROST display

This indicates when the defrost operation is performed.

FILTER display

This lamp lights when the filter need to be cleaned.

CHECK display

This indicates when a malfunction has occurred in the unit which should be checked.

SET TEMPERATURE display

This displays the selected setting temperature.

POWER display

This lamp lights when electricity is supplied to the unit.

CAUTION:

- Only the Power display lights when the unit is stopped and power supplied to the unit.
- When the central control remote control unit, which is sold separately, is used the ON-OFF button, operation switch button and TEMP. adjustment button do not operate.
- “NOT AVAILABLE” is displayed when the Air speed button are pressed.This indicates that this room unit is not equipped with the fan direction adjustment function and the louver function.
- When power is turned ON for the first time, it is normal that “H0” is displayed on the room temperature indication (For max. 2 minutes). Please wait until this “H0” indication disappear then start the operation.

A.1.13.2 Wireless Remote Controller

When cover is open.

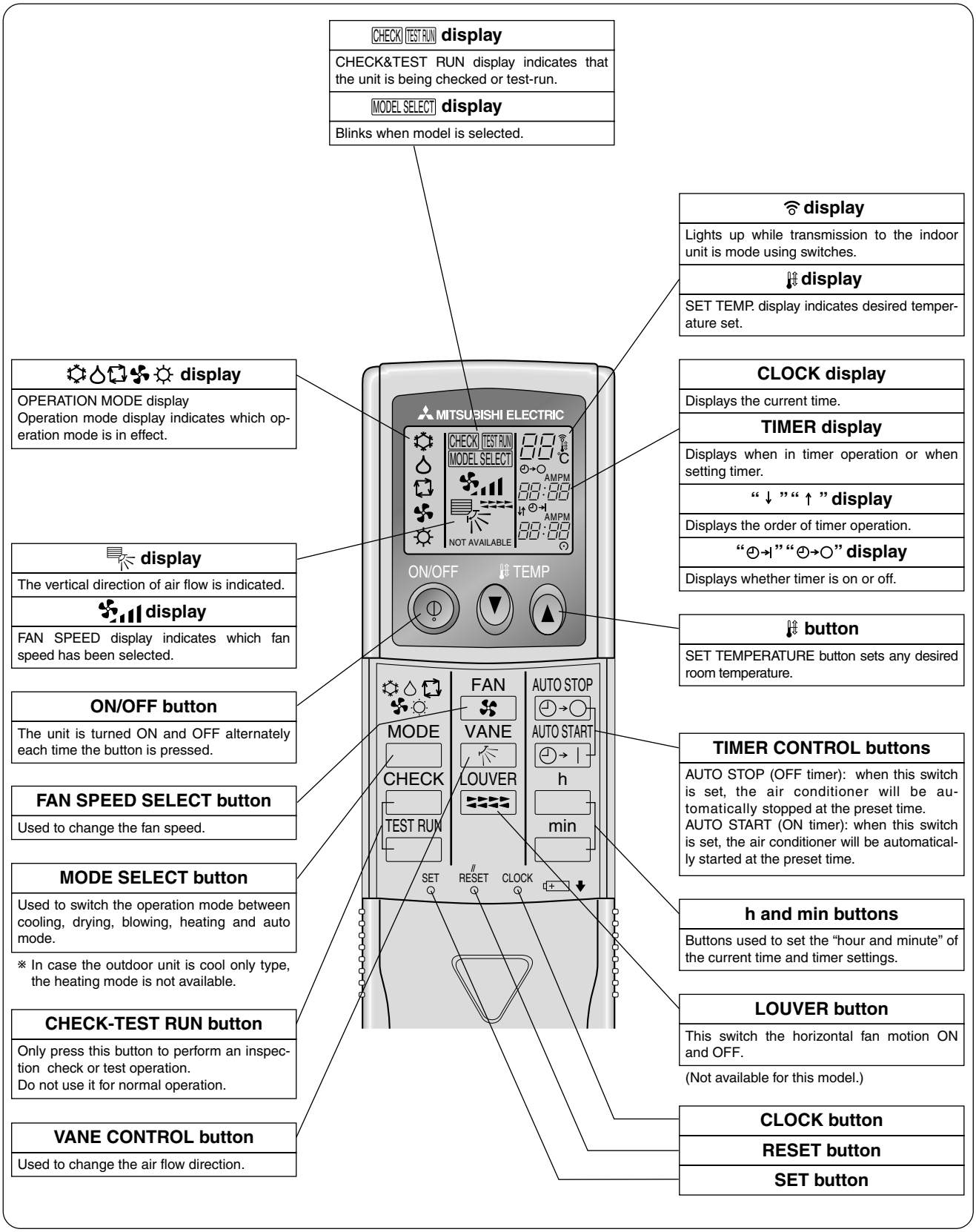

CHECK TEST RUN display

CHECK&TEST RUN display indicates that the unit is being checked or test-run.

MODEL SELECT display

Blinks when model is selected.

display

Lights up while transmission to the indoor unit is mode using switches.

display

SET TEMP. display indicates desired temperature set.

display

OPERATION MODE display
Operation mode display indicates which operation mode is in effect.

CLOCK display

Displays the current time.

TIMER display

Displays when in timer operation or when setting timer.

"↓" "↑" display

Displays the order of timer operation.

"" "" display

Displays whether timer is on or off.

display

The vertical direction of air flow is indicated.

display

FAN SPEED display indicates which fan speed has been selected.

button

SET TEMPERATURE button sets any desired room temperature.

ON/OFF button

The unit is turned ON and OFF alternately each time the button is pressed.

TIMER CONTROL buttons

AUTO STOP (OFF timer): when this switch is set, the air conditioner will be automatically stopped at the preset time.
AUTO START (ON timer): when this switch is set, the air conditioner will be automatically started at the preset time.

FAN SPEED SELECT button

Used to change the fan speed.

MODE SELECT button

Used to switch the operation mode between cooling, drying, blowing, heating and auto mode.

※ In case the outdoor unit is cool only type, the heating mode is not available.

h and min buttons

Buttons used to set the "hour and minute" of the current time and timer settings.

CHECK-TEST RUN button

Only press this button to perform an inspection check or test operation.
Do not use it for normal operation.

LOUVER button

This switch the horizontal fan motion ON and OFF.

(Not available for this model.)

VANE CONTROL button

Used to change the air flow direction.

CLOCK button

RESET button

SET button

A.1.14 TROUBLESHOOTING

[for wired remote controller]

Problem	Solution
Unit does not cool or heat very well.	Clean the filter.
The unit stops operating before arriving at the set temperature in the heating mode.	Frost forms when the outdoor temperature is low and humidity is high. Wait for about 10 minutes for the frost to melt.
The air flow direction suddenly changes.	After one hour of cooling-mode operation with the air flow in a downward direction, the unit will automatically change to the "Horizontal air flow" mode.
	When the unit is in the heating or defrosting mode, it will automatically change to the "Horizontal air flow mode".
A white mist is expelled from the indoor unit.	This may occur just after the unit is turned on when a high level of humidity is present in the room.
The indicators of the remote controller do not light up when operated.	Turn on the power switch. " · " will be displayed.

Problem	Solution
CENTRALLY CONTROLLED is displayed in the remote controller.	The start and stop functions of the remote controller are not available when the CENTRALLY CONTROLLED message is lit.
The start and stop functions are not available just after restarting the unit.	Wait about three minutes (operation has stopped to prevent damage to the air conditioner).
"H0" is displayed in the remote controller.	An automatic startup test is being performed (will last for about two minutes).
An error code is displayed in the remote controller. The operating display of the wireless remote controller's receiver is flashing.	A self-diagnostic function is being performed to preserve the air conditioner. * Do not attempt to make repairs yourself. Turn the main switch off and contact the dealer from whom you bought the air conditioner. Provide him or her with the name of the unit and the information displayed in the remote controller.

[for wireless remote controller]

Problem	Solution
Unit does not operate at all.	Turn main power on. Then press the POWER ON/OFF button to turn the unit on.
	Wait until power is restored, then press the POWER ON/OFF button to turn the unit on.

Problem	Solution
Unit does not start immediately.	Wait until the unit restarts automatically. The compressor may hesitate resuming because a three-minute resume prevention circuit is incorporated in the outdoor unit for protection of the compressor.

NOTE: After a power cut, the unit will not restart automatically. You will have to restart it by pressing the POWER - ON/OFF button on the remote controller.

If none of the above apply, turn the main switch off and contact the dealer from whom you bought the air-conditioner, telling him the model name and the nature of the problem. Do not try to fix the unit yourself.

Wired remote controllers

In any of the following cases, turn off the main power switch and contact your local dealer for service:

- The operation lamp (on the main unit) flashes.
- The switches do not work properly.
- The circuit breaker trips frequently (or the fuse blows frequently).
- Water has accidentally been splashed into the unit.
- Water leaks from the unit.
- Something is accidentally dropped into the air-conditioner.
- An unusual noise is heard during operation.

Wireless remote controllers: The Operating LED blinks.

The following do not indicate any malfunction:

Odours: smells such as tobacco or cosmetic odours may persist after they have been sucked into the unit.
Sound of liquid flowing inside indoor unit: this can occur during or after operation and is simply the sound of refrigerant being circulated inside the unit.
Ticking sound coming from indoor unit: this can occur when cooling or heating has just begun or has just stopped. It is caused by the indoor unit shrinking or expanding slightly due to the change in temperature.
The message "CENTRALLY CONTROLLED" appearing on the LCD panel: from time to time, this message may come up on the LCD panel. This does not indicate any malfunction.

A.1.15 INSTALLATION PROCEDURE

The procedure in this section uses the PLH-P1.6/P2/P2.5KAH, PLH-P3/P4/P5/P6AAH series as an example.

PLH-P·KAH

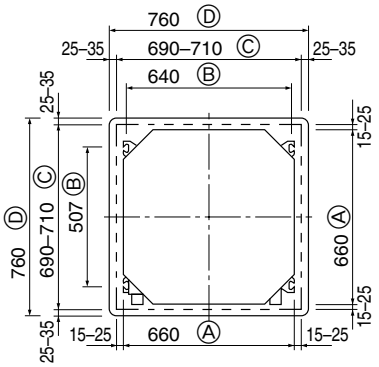

(mm)

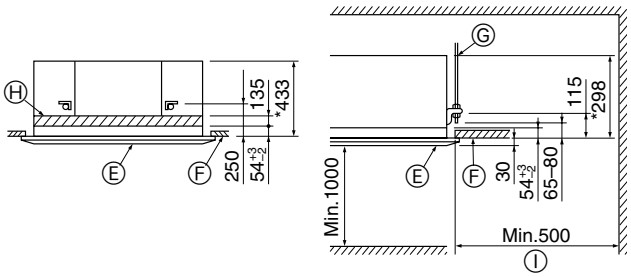

PLH-P·AAH

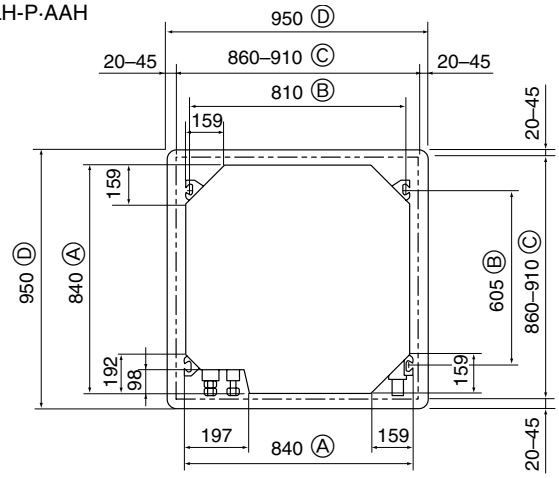

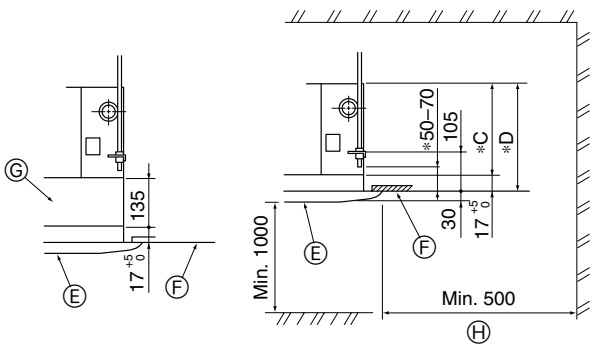

1. Installing position

1.1. PLH-P·KAH

- Using the installation template (top of the package) and the gauge (supplied as an accessory with the grille), make an opening in the ceiling so that the main unit can be installed as shown in the diagram. (The method for using the template and the gauge are shown.)
  - * Before using, check the dimensions of template and gauge, because they change due to fluctuations of temperature and humidity.
  - * The dimensions of ceiling opening can be regulated within the range shown in following diagram; so center the main unit against the opening of ceiling, ensuring that the respective opposite sides on all sides of the clearance between them becomes identical.
- Use M10 (3/8") suspension bolts.
  - * Suspension bolts are to be procured at the field.
- Install securely, ensuring that there is no clearance between the ceiling panel & grille, and between the main unit & grille.

Note:

Be sure to add 135 mm to the dimensions in the diagram that are marked with a "*" if installing a multifunction casement (sold separately).

Ⓐ Outer side of main unit
Ⓑ Bolt pitch
Ⓒ Ceiling opening
Ⓓ Outer side of grille
Ⓔ Grille
Ⓕ Ceiling
Ⓖ Suspension bolt
Ⓗ Multi function casement (option)
Ⓘ Entire periphery
* Note that the space between ceiling panel of the unit and ceiling slab and etc must be 10 to 15 mm.

1.2. PLH-P·AAH

- Using the installation template (top of the package) and the gauge (supplied as an accessory with the grille), make an opening in the ceiling so that the main unit can be installed as shown in the diagram. (The method for using the template and the gauge are shown.)
  - * Before using, check the dimensions of template and gauge, because they change due to fluctuations of temperature and humidity.
  - * The dimensions of ceiling opening can be regulated within the range shown in following diagram; so center the main unit against the opening of ceiling, ensuring that the respective opposite sides on all sides of the clearance between them becomes identical.
- Use M10 (3/8") suspension bolts.
  - * Suspension bolts are to be procured at the field.
- Install securely, ensuring that there is no clearance between the ceiling panel & grille, and between the main unit & grille.

Ⓐ Outer side of main unit
Ⓑ Bolt pitch
Ⓒ Ceiling opening
Ⓓ Outer side of grille
Ⓔ Grille
Ⓕ Ceiling
Ⓖ Multi function casement (option)
Ⓗ Entire periphery
* Note that the space between ceiling panel of the unit and ceiling slab and etc must be 10 to 15 mm.

(mm)

Models	*C	*D
PLH-3	241	258
PLH-4, P5, P6	281	298

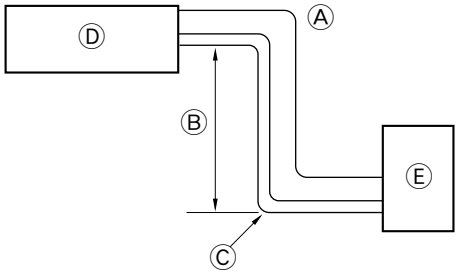

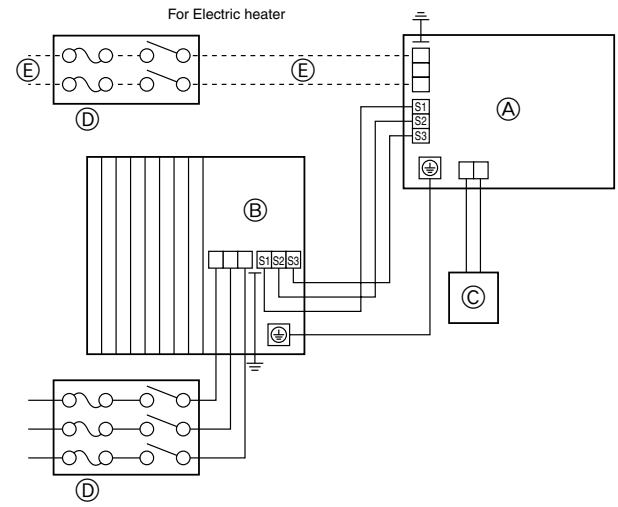

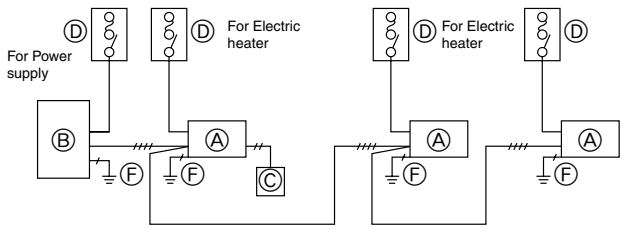

2. Refrigerant pipes

▶ **Check that the difference between the heights of the indoor and outdoor units, the length of refrigerant pipe, and the number of bends in the pipe are within the limits shown below.**

Models	Ⓐ Pipe length (one way)	Ⓑ Height difference	Ⓒ Number of bends (one way)
PLH-P1.6, P2	max. 40 m	max. 40 m	max. of 12
PLH-P2.5~P6	max. 50 m	max. 50 m	max. of 15

- Height difference limitations are binding regardless of which unit, indoor or outdoor, is positioned higher.
  - Ⓐ Length of refrigerant pipe
  - Ⓑ Height difference
  - Ⓒ Number of bends
  - Ⓓ Indoor unit
  - Ⓔ Outdoor unit

3. Electrical work precaution

- The compressor will not operate unless the power supply phase connection is correct.
- Grounding protection with a no-fuse breaker (earth leakage breaker [ELB]) is usually installed for Ⓓ.
- The connection wiring between the outdoor and indoor units can be extended up to a maximum of 50 meters, and the total extension including the crossover wiring between rooms is a maximum of 80 m.
  - Ⓐ Indoor unit
  - Ⓑ Outdoor unit
  - Ⓒ Remote controller
  - Ⓓ Main switch/fuse
  - Ⓔ For only Electric heater
  - Ⓕ Grounding

A switch with at least 3 mm contact separation in each pole shall be provided by the air conditioner installation.

∗ Label each breaker according to purpose (heater, unit etc.)

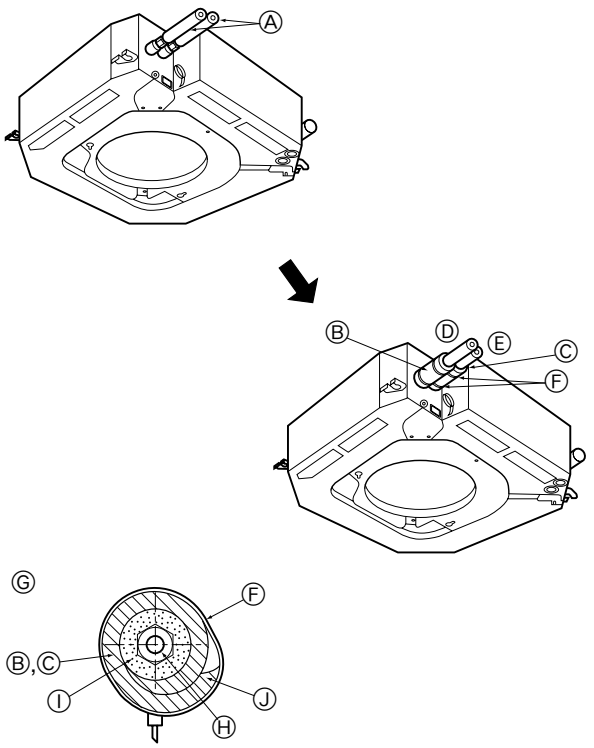

4. Refrigerant piping work

Heat insulation for refrigerant pipes

① Wrap the enclosed large-sized pipe cover around the gas pipe, making sure that the end of the pipe cover touches the side of the unit.

② Wrap the enclosed small-sized pipe cover around the liquid pipe, making sure that the end of the pipe cover touches the side of the unit.

③ Secure both ends of each pipe cover with the enclosed bands. (Attach the bands 20 mm from the ends of the pipe cover.)

- Ⓐ Refrigerant pipe and insulating material
- Ⓑ Pipe cover (large)
- Ⓒ Pipe cover (small)
- Ⓓ Refrigerant pipe (gas)
- Ⓔ Refrigerant pipe (liquid)
- Ⓕ Band
- Ⓖ Cross-sectional view of connection
- Ⓗ Pipe
- Ⓘ Insulating material
- Ⓙ Squeeze

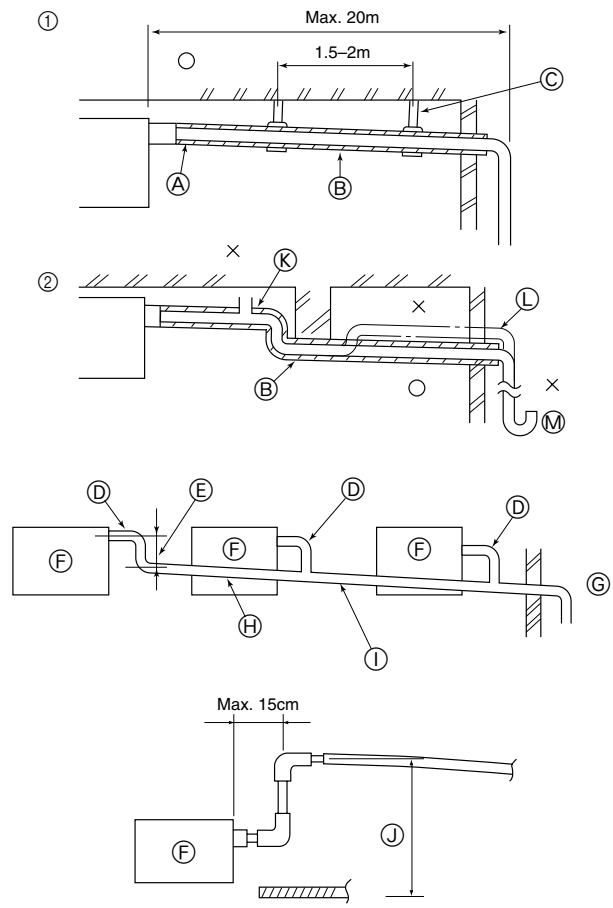

5. Drain piping work

- Use VP25 (O. D. ϕ32 PVC TUBE) for drain piping and provide 1/100 or more downward slope.
- Be sure to connect the piping joints using a polyvinyl type adhesive.
- Observe the figure for piping work.
- Use the included drain hose to change the extraction direction.
  - ① Correct piping
  - ② Wrong piping
  - Ⓐ Insulation (9 mm or more)
  - Ⓑ Downward slope (1/100 or more)
  - Ⓒ Support metal
  - Ⓚ Air bleeder
  - Ⓛ Raised
  - Ⓜ Odor trap

Grouped piping

- Ⓓ O. D. ϕ32 PVC TUBE
- Ⓔ Make it as large as possible
- Ⓕ Indoor unit
- Ⓖ Make the piping size large for grouped piping.
- Ⓗ Downward slope (1/100 or more)
- Ⓘ O. D. ϕ38 PVC TUBE for grouped piping. (9 mm or more insulation)
- Ⓙ Up to 50 cm (for PLH-P·KAH)
  Up to 85 cm (for PLH-P·AAH)

Outdoor unit drainage pipe connection

When drain piping is necessary, use the drain pan (optional parts).

PLH-P· KAH

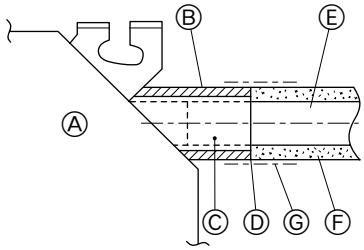

PLH-P· AAH

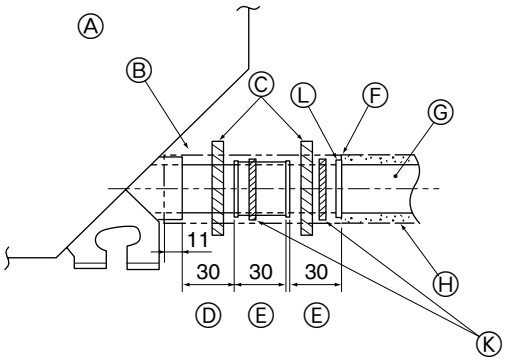

(mm)

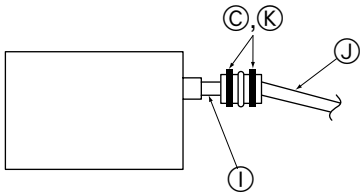

5.1. PLH-P·KAH

1. Install a locally purchased drain pipe (PVC pipe, VP-25).
   (Affix the pipe using PVC adhesive, and then secure it.)
2. Insulate the hose and pipe.
3. Check that liquid flows smoothly through the drain.
4. Insulate the drain hose with insulating material, and then secure the material with tape.
   - Ⓐ Unit
   - Ⓑ Insulating material
   - Ⓒ Drain hose (transparent)
   - Ⓓ Matching
   - Ⓔ Drain pipe (VP-25)
   - Ⓕ Insulating material (purchased locally)
   - Ⓖ Tape

5.2. PLH-P·AAH

1. Connect the drain socket (supplied with the unit) to the drain port.
   (Affix the tube using PVC adhesive then secure it with a band.)
2. Install a locally purchased drain pipe (PVC pipe, O.D. ϕ32).
   (Affix the pipe using PVC adhesive then secure it with a band.)
3. Insulate the tube and pipe. (PVC pipe, O.D. ϕ32 and socket)
4. Check that drain flows smoothly.
5. Insulate the drain port with insulating material, then secure the material with a band. (Both insulating material and band are supplied with the unit.)
   - Ⓐ Unit
   - Ⓑ Insulating material
   - Ⓒ Band (large)
   - Ⓓ Drain port (transparent)
   - Ⓔ Insertion margin
   - Ⓕ Matching
   - Ⓖ Drain pipe (O.D. ϕ32 PVC TUBE)
   - Ⓗ Insulating material (purchased locally)
   - Ⓘ Transparent PVC pipe
   - Ⓙ O.D. ϕ32 PVC TUBE (Slope 1/100 or more)
   - Ⓚ Band (small)
   - Ⓛ Drain socket

PLH-P·KAH

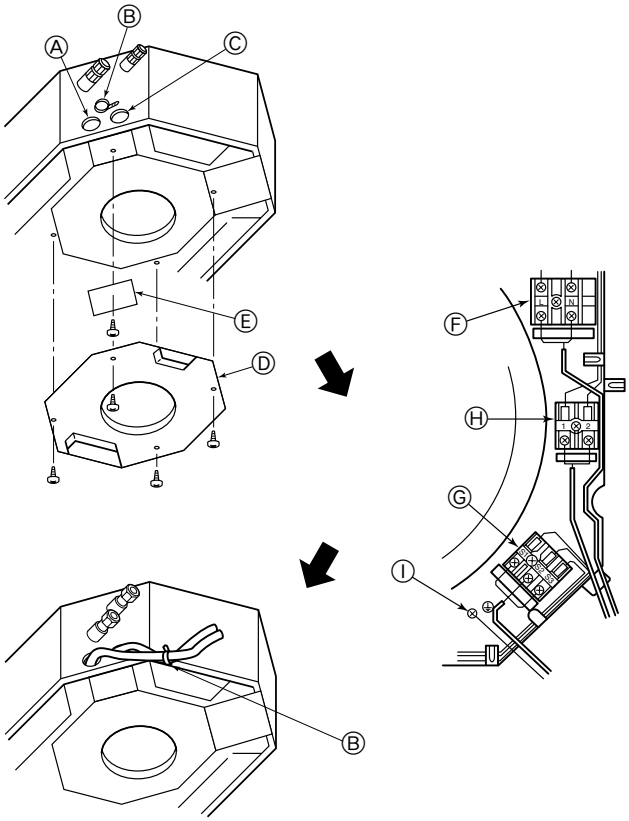

6. Electric work

6.1. PLH-P·KAH

1. Remove the two electrical wiring service panels.
2. Wire the power cable and control cable separately through the respective wiring entries given in the diagram.

- Do not allow slackening of the terminal screws
- Always install an earth.
  (Earth cable dia: Thicker than 1.6 mm)
- Leave excess cable so that the electrical box can be suspended below the unit during servicing. (Approx. 50 to 100 mm)

Ⓐ Entry for control cable
Ⓑ Clamp
Ⓒ Entry for power
Ⓓ Service panel for indoor controller switch setting
Ⓔ Service panel for electrical wiring
Ⓕ Electric heater power supply terminals (PLH models)
Ⓖ Indoor / Outdoor unit connecting terminals
Ⓗ Remote controller terminals
Ⓘ Earth wire connection point

▶ **Selecting non-fuse breaker (NF) or earth leakage breaker (NV).**

PLH-P·AAH

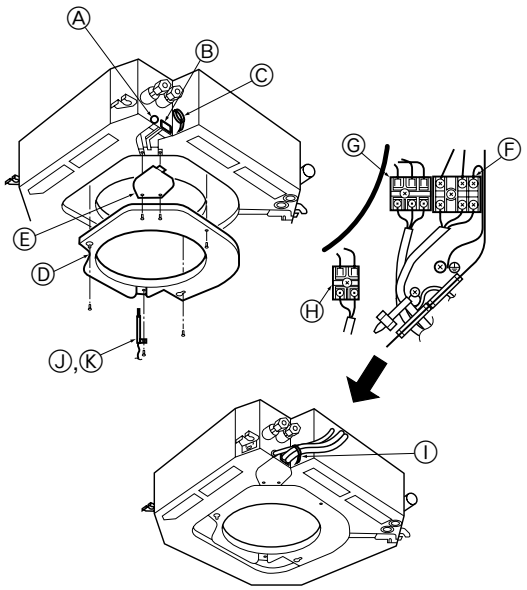

6.2. PLH-P·AAH

1. Remove the two electrical wiring service panels.
2. Wire the power cable and control cable separately through the respective wiring entries given in the diagram.

- Do not allow slackening of the terminal screws
- Always install an earth.
  (Earth cable dia: Thicker than 1.6 mm)
- Leave excess cable so that the electrical box can be suspended below the unit during servicing. (Approx. 50 to 100 mm)

Ⓐ Entry for control cable
Ⓑ Entry for power
Ⓒ Clamp
Ⓓ Service panel for indoor controller switch setting
Ⓔ Service panel for electrical wiring
Ⓕ Electric heater power supply terminals (PLH models)
Ⓖ Indoor / Outdoor unit connecting terminals
Ⓗ Remote controller connector
Ⓘ Secure with the clamp
Ⓙ Intake sensor
Ⓚ Holder

▶ **Selecting non-fuse breaker (NF) or earth leakage breaker (NV).**

PLH-P1.6/P2/P2.5KAH

1)

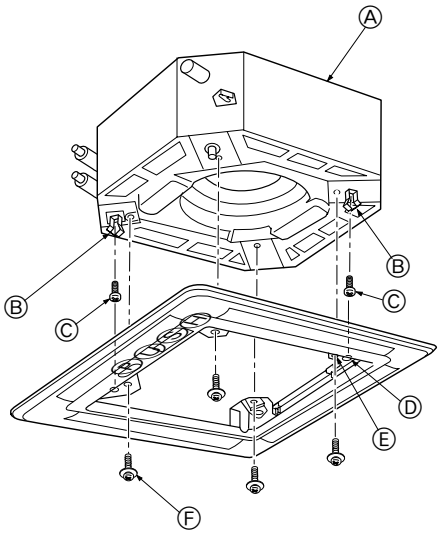

2)

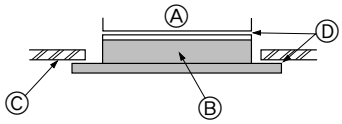

3)

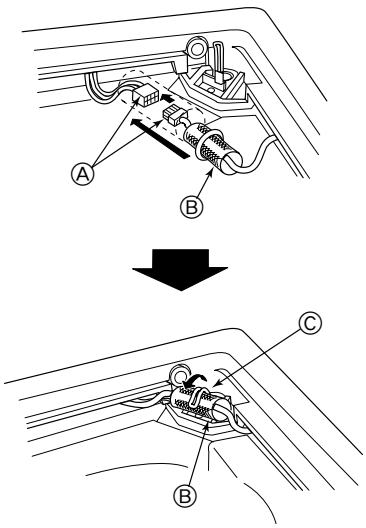

7. Installing the grille

7.1. PLH-P1.6/P2/P2.5KAH

1) Tacking

- Please attach the hook [6] to the unit in advance using the tapping screw [4], as shown on the right.
- Adjust the position of the grille and place the grille in the unit. Make sure that the hook will catch the hole on the grille (ϕ30).

Note:
Check that the connector is not caught in between.

Ⓐ Unit
Ⓑ Hook [6]
Ⓒ Tapping screw [4] 4 × 10
Ⓓ Hole (ϕ30)
Ⓔ Hole (ϕ14)
Ⓕ Screw with washer [2]
M5 × 0.8 × 25

2) Fixing the grille

- Using 4 screws no. [2], attach the grille to the unit (ϕ14).

* When installing the grille on the unit, tighten the screw with washer securely, allowing no gap between the unit and the grille, or between the grille and the surface of the ceiling.

Ⓐ Unit
Ⓑ Grille
Ⓒ Ceiling
Ⓓ Allow no gap.

3) Wire connection

- Be sure to connect the connector (red, 10-pole) for the unit and decorative panel. After completing connection, slide the white glass tube (ϕ21), that is positioned on the lead wire of the unit, in the direction of the arrow until it covers the connector connection to prevent exposure, and clamp the connector connection section with the panel clamp. Also, if the lead wire is slack, gather this in with the panel clamp.

Ⓐ Connector
Ⓑ White glass tube
Ⓒ Clamp

PLH-P3/P4/P5/P6AAH

1) (mm)

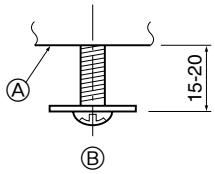

2)

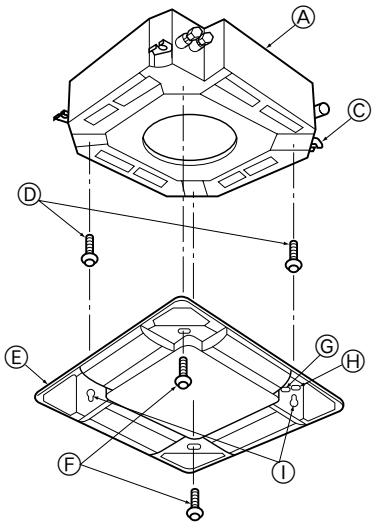

3)

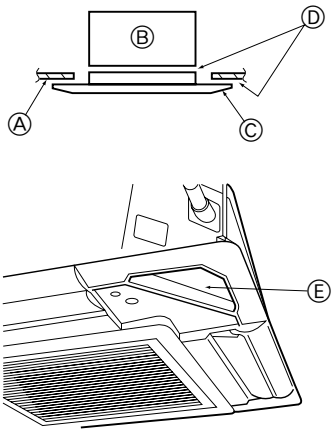

4)

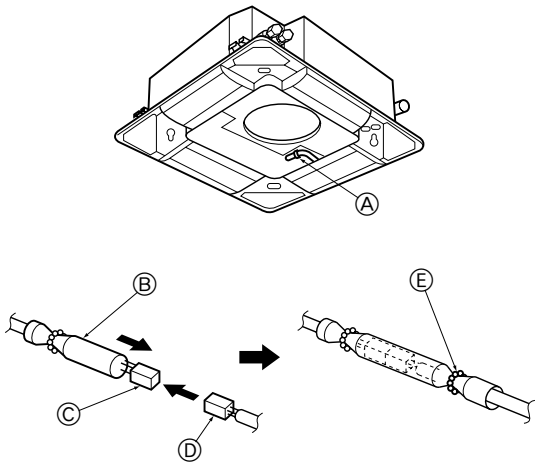

7.2. PLH-P3/P4/P5/P6AAH

1) Preparations

- Install the two enclosed screws with washer ② in the main unit (at the corner drain pipe area and at the opposite corner) as shown in the diagram.

2) Temporary installation of the grille

- Temporarily secure the grille using the bell shaped holes by aligning the corner drain pipe area of the main unit with the two holes of the grille that are marked A and B.

  * Make sure that the lead wiring of the grille does not get pinched between the grille and the main unit.

  Ⓐ Main unit
  Ⓑ Detailed diagram of installed screw with washer ②.
  Ⓒ Corner drain pipe area
  Ⓓ Screw with washer ② (for temporary use)
  Ⓔ Grille
  Ⓕ Screw with washer ②
  Ⓖ Hole A
  Ⓗ Hole B
  Ⓘ Bell shaped hole

3) Securing the grille

- Secure the grille to the main unit by tightening the previously installed two screws (with captive washer) as well as the two remaining screws (with captive washer).

  * Make sure that there are no gaps between the main unit and the grille or the grille and the ceiling.

Fixing gaps between the grille and the ceiling

With the grille attached, adjust the height of the main unit to close the gap.

Ⓐ Ceiling
Ⓑ Main unit
Ⓒ Grille
Ⓓ Make sure that there are no gaps.
Ⓔ Adjust the nut of the main unit using a wrench, etc.

4) Wire connection

- Be sure to connect the unit to the connector (white, 10-pole). Next, attach the white glass tube that comes with the main unit so that the tube covers the connector. Close the opening of the glass tube with the fastener.
- Make sure that there is no slack in the lead wire at the clamp of the main unit.

Ⓐ Clamp of the main unit
Ⓑ Tube
Ⓒ Connector of the main unit
Ⓓ Grille connector
Ⓔ Fastener

A.1.16 ACCESSORIES AND PARTS

PLH-P3/P4/P5/P6AAH
PLA-P3/P4/P5/P6AA

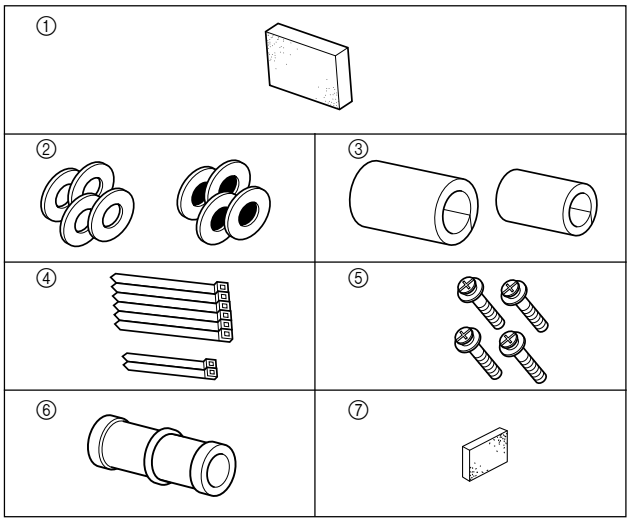

Part number	Accessory	Quantity
①	Installation template	1
②	Washers (with insulation) Washers (without insulation)	4 4
③	Pipe cover (for refrigerant piping joint) small diameter large diameter	 1 1
④	Band (large) Band (small)	6 2
⑤	Screw with the washer (M5 × 25) for mounting grille	4
⑥	Drain socket	1
⑦	Insulation	1

[Grille + Remote controller (option)]

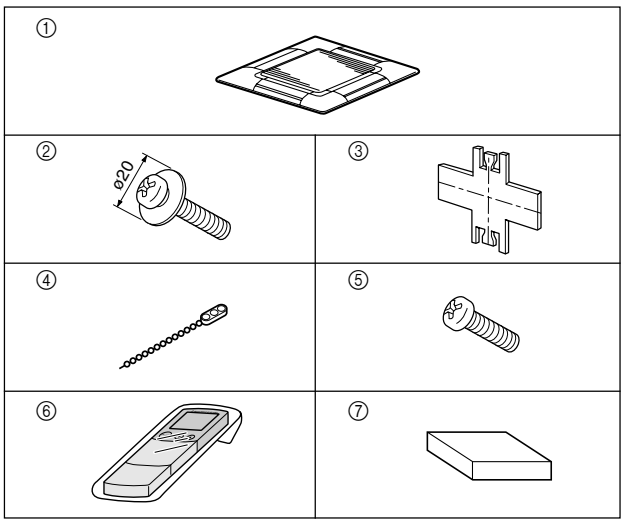

Part number	Accessory	Quantity	Remark
①	Grille	1	950 × 950 (mm)
②	Screw with captive washer	4	M5 × 0.8 × 25
③	Gauge	1	(Divided into four parts)
④	Fastener	2	
⑤	Screw	4	4 × 8
⑥	Wireless remote controller	(1)	for PLP-6AALKH
⑦	Wired remote controller	(1)	for PLP-6AAKH

PLH-P1.6/P2/P2.5KAH
PLA-P1.6/P2/P2.5KA

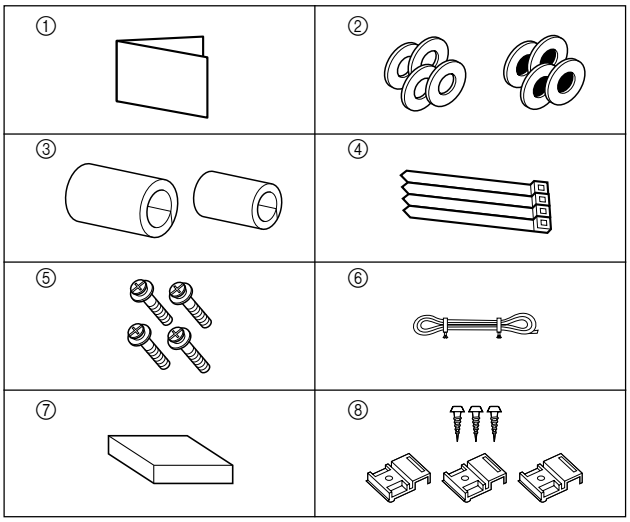

Part number	Accessory	Quantity
①	Refrigerant notice	1
②	Washers (with insulation) Washers (without insulation)	4 4
③	Pipe cover (for refrigerant piping joint) small diameter large diameter	 1 1
④	Band	4
⑤	Screw with washer (M5 × 25) for mounting grille	4
⑥	Cord	1
⑦	Wired remote controller	1
⑧	Screw (M4.1 × 16) for remote controller Cord clamp (for remote controller)	3 3

[Grille + Remote controller (option)]

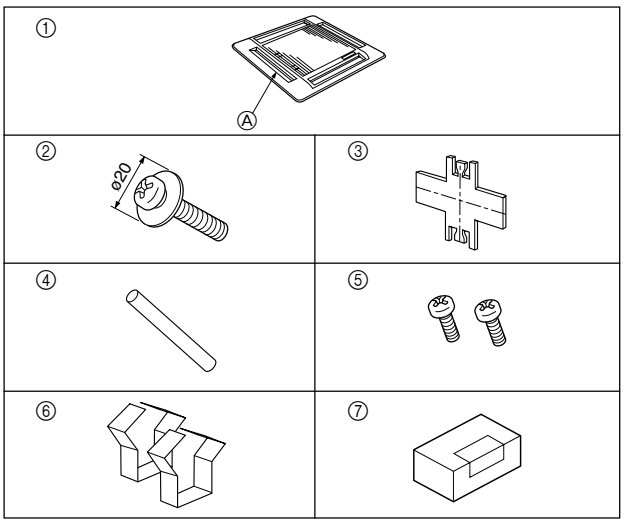

Part number	Accessory	Quantity	Remark
①	Grille	1	760 × 760 (mm)
②	Screw with captive washer	4	M5 × 0.8 × 25
③	Gauge	1	(Divided into four parts)
④	Stick for the intake grille open/close	1	φ8 × 750
⑤	Tapping screw	2	4 × 10
⑥	Hook for temporary placement	2	—
⑦	Wireless remote controller	1	Supplied for grille that supports wireless remote controller

Ⓐ Auto vane

A.1.17 SAFETY DEVICE SETTINGS

PLA-P1.6/P2/P2.5KA
PLH-P1.6/P2/P2.5KAH

Safety device \ Model	PLA-P1.6KA	PLA-P2KA	PLA-P2.5KA	PLH-P1.6KAH	PLH-P2KAH	PLH-P2.5KAH
Fan motor thermal protector	OFF 130±5℃ ON 80±20℃			OFF 130±5℃ ON 80±20℃		
Thermal fuse	—			OFF 77℃		
Heater thermal switch	—			ON 32±5℃ OFF 42±3℃		

PLA-P3/P4/P5/P6AA
PLH-P3/P4/P5/P6AAH

Safety device \ Model	PLA-P3AA	PLA-P4AA	PLA-P5AA	PLA-P6AA	PLH-P3AAH	PLH-P4AAH	PLH-P5AAH	PLH-P6AAH
Fan motor thermal protector	OFF 130℃ ON 80±20℃				OFF 130℃ ON 80±20℃			
Thermal fuse	—				OFF 98℃	OFF 104℃		
Heater thermal switch	—				ON 32±5℃ OFF 42±3℃	ON 35±5℃ OFF 50±5℃		

A.1.18 SYSTEM CONTROL

PLH-P·AAH, PLH-P·KAH
PLA-P·AA, PLA-P·KA
VARIETY OF SYSTEM CONTROL FUNCTIONS

(1) System construction

A-control model which just wires the connecting line between the indoor and outdoor unit and supply the power is applicable to any models of standard (1:1), twin and triple.

		Standard 1:1	Synchronized twin. Triple
System construction		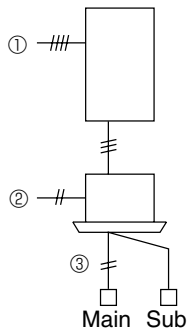 ① Unit (indoor/outdoor) power supply L1/L2/L3/N ② Connecting line between the indoor and outdoor; S1/S2/S3, Polarized 3-wire ③ Remote controller transmission line; Non polarezed 2-wire ④ Auxiliary heater exclusive power supply; L/N	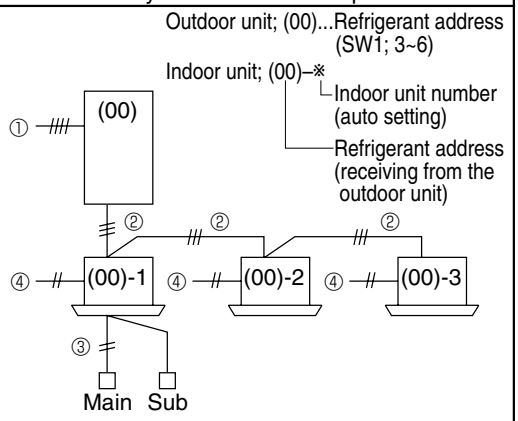 ① Unit (indoor/outdoor) power supply L1/L2/L3/N ② Connecting line between the indoor and outdoor; S1/S2/S3, Polarized 3-wire ③ Remote controller transmission line; Non polarezed 2-wire ④ Auxiliary heater exclusive power supply; L/N
Various setting	Remote controller	Remote control main/sub setting necessity (In case of 2 remote controllers)	Remote control main/sub setting necessity (In case of 2 remote controllers)
	Indoor unit	No setting	No setting (initial setting)
	Outdoor unit	No setting	No setting (initial setting)
Remarks			(1) Indoor unit number is set automatically
		Group control	
System construction		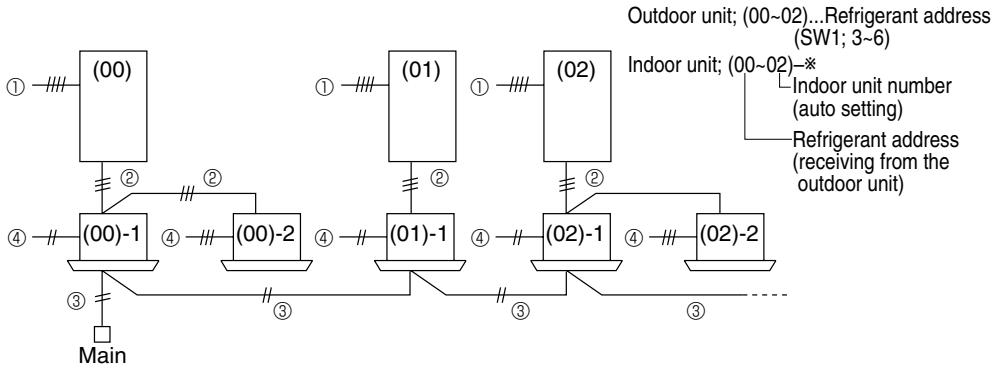 ① Unit (indoor/outdoor) power supply L1/L2/L3/N ② Connecting line between the indoor and outdoor; S1/S2/S3, Polarized 3-wire ③ Remote controller transmission line; Non polarezed 2-wire ④ Auxiliary heater exclusive power supply; L/N	
Various setting	Remote controller	Remote control main/sub setting necessity (In case of 2 remote controllers)	
	Indoor unit	No setting (initial setting)	
	Outdoor unit	Refrigerant address setting; SW1; 3~6	
Remarks		(1) Indoor unit number is set automatically (2) When the refrigerant address of the unit is “00”, Remote controller is supplied.	