MITSUBISHI ELECTRIC

MITSUBISHI ELECTRIC

Floor and Ceiling Type Air-Conditioner

MCF-13NV/18NV/24NV Series
MCFH-13NV/18NV Series

[FLARE CONNECTION TYPE]

CE

INSTALLATION MANUAL

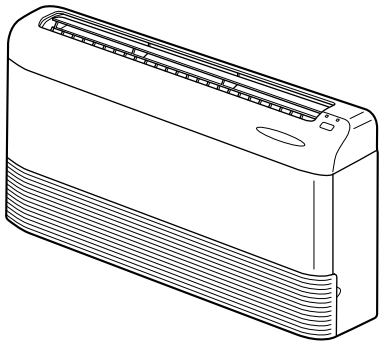

CONTENTS

1. THE FOLLOWING SHOULD ALWAYS BE OBSERVED FOR SAFETY 2
2. SELECTING THE INSTALLATION LOCATION 2
3. INSTALLATION DIAGRAM & ACCESSORIES 3
4. INDOOR UNIT INSTALLATION 4
5. OUTDOOR UNIT INSTALLATION 9
6. INDOOR/OUTDOOR UNIT CONNECTION FINISHING AND TEST RUN 10
7. FOR MOVEMENT AND MAINTENANCE 12

English
Deutsch
Français
Nederlands
Español
Italiano
Ελληνικά
Português
Dansk
Svenska
Türkçe
Русский

FOR INSTALLER

1. THE FOLLOWING SHOULD ALWAYS BE OBSERVED FOR SAFETY

- **Please provide an exclusive circuit for the air conditioner and do not connect other electrical appliances to it. Please report to your supply authority or obtain their consent before connecting this equipment to the power supply system.**
- **Be sure to read "THE FOLLOWING SHOULD ALWAYS BE OBSERVED FOR SAFETY" before installing the air conditioner.**
- **Be sure to observe the cautions specified here as they include important items related to safety.**
- **The indications and meanings are as follows.**

⚠ **Warning: Could lead to death, serious injury, etc.**

⚠ **Caution: Could lead to serious injury in particular environments when operated incorrectly.**

- **After reading this manual, be sure to keep it together with the instruction manual in a handy place on the customer's site.**

⚠ Warning

■ **Do not install it by yourself (customer).**
Incomplete installation could cause injury due to fire, electric shock, the unit falling or leakage of water. Consult the dealer from whom you purchased the unit or special installer.

■ **Install the unit securely in a place which can bear the weight of the unit.**
When installed in an insufficient strong place, the unit could fall causing injury.

■ **Use the specified wires to connect the indoor and outdoor units securely and attach the wires firmly to the terminal block connecting sections so the stress of the wires is not applied to the sections.**
Incomplete connecting and fixing could cause a fire.

■ **Do not use intermediate connection of the power cord or the extension cord and do not connect many devices to one AC outlet.**
It could cause a fire or an electric shock due to defective contact, defective insulation, exceeding the permissible current, etc.

■ **Check that the refrigerant gas does not leak after installation has completed.**

■ **Perform the installation securely referring to the installation manual.**
Incomplete installation could cause a personal injury due to fire, electric shock, the unit falling or leakage of water.

■ **Perform electrical work according to the installation manual and be sure to use an exclusive circuit.**
If the capacity of the power circuit is insufficient or there is incomplete electrical work, it could result in a fire or an electric shock.

■ **Attach the electrical part cover to the indoor unit and the service panel to the outdoor unit securely.**
If the electrical part cover in the indoor unit and/or the service panel in the outdoor unit are not attached securely, it could result in a fire or an electric shock due to dust, water, etc.

■ **Be sure to use the part provided or specified parts for the installation work.**
The use of defective parts could cause an injury or leakage of water due to a fire, an electric shock, the unit falling, etc.

■ **Be sure to cut off the main power in case of setting up the indoor electronic control P.C. board or wiring works.**
It could cause an electric shock.

⚠ Caution

■ **Perform grounding.**
Do not connect the ground wire to a gas pipe, water pipe, lightning rod or telephone ground wire. Defective grounding could cause an electric shock.

■ **Do not install the unit in a place where an inflammable gas leaks.**
If gas leaks and accumulates in the area surrounding the unit, it could cause an explosion.

■ **Install a ground leakage breaker depending on the installation place (where it is humid).**
If a ground leakage breaker is not installed, it could cause an electric shock.

■ **Perform the drain/piping work securely according to the installation manual.**
If there is a defect in the drain/piping work, water could drop from the unit and household goods could be wet and damaged.

2. SELECTING THE INSTALLATION LOCATION

2-1 INDOOR UNIT

- Where airflow is not blocked.
- Where cool air spreads over the entire room.
- Rigid wall or ceiling without vibration.
- Where it is not exposed to direct sunshine.
- Where easily drained.
- At a distance 1 m or more away from your TV and radio (to prevent picture from being distorted or noise from being generated).
- In a distance as far as possible from fluorescent and incandescent lights (so the infrared remote control can operate the air conditioner normally).
- Where the air filter can be removed and replaced easily.

2-2 WIRELESS REMOTE CONTROLLER MOUNTING

- Place of mounting
  - Where it is easy to operate and easily visible.
  - Where children cannot touch.

- Mounting
  Select a position about 1.2 m above the floor, check that signals from the controller are surely received by the indoor unit from that position ('beep' or 'beep-beep' receiving tone sounds), attach remote controller mounting hardware ④ to a pillar or wall, then set the wireless remote controller ③.

In rooms where inverter type fluorescent lamps are used, the signal from the wireless remote controller may not be received.

2-3 OUTDOOR UNIT

- Where it is not exposed to strong wind.
- Where airflow is good and dustless.
- Where it is not exposed to rain and direct sunshine.
- Where neighbours are not annoyed by operation sound or hot air.
- Where rigid wall or support is available to prevent the increase of operational sound or vibration.
- Where there is no risk of combustible gas leakage.
- When installing the unit at a high level, be sure to fix the unit legs.
- Where it is at least 3 m away from the antenna of TV set or radio. (Otherwise, images would be disturbed or noise would be generated.)
- Install the unit horizontally.

⚠ **Caution:**
Avoid the following places for installation where air conditioner trouble is liable to occur.
- **Where there is too much oil such as for machine or cooking.**
- **Salty environment as seaside areas.**
- **Hot-spring areas.**
- **Where sulfide gas exists.**
- **Other special atmospheric areas.**

<MUCF-13NV>
<MUCFH-13NV>

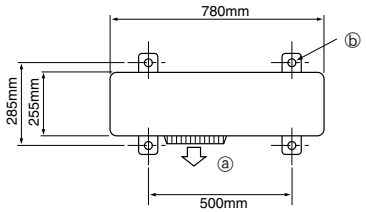

<MUCF-18NV/24NV>
<MUCFH-18NV>

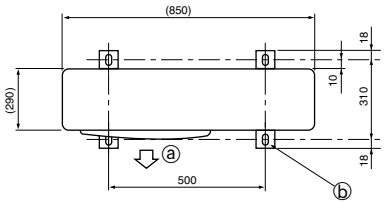

ⓐ Air outlet
ⓑ 4-10 × 21 slot

(unit : mm)

3. INSTALLATION DIAGRAM & ACCESSORIES

MCF-13NV
MCF-18NV
MCF-24NV
MCFH-13NV
MCFH-18NV

Remark:
Accessories of this unit are packed inside the unit. Please remove the front grille as shown in the right (See "FRONT GRILL REMOVAL"), and check accessories before installation.

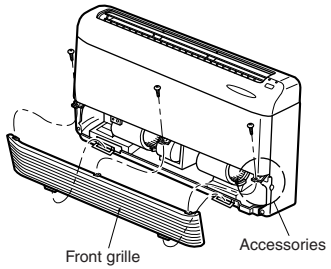

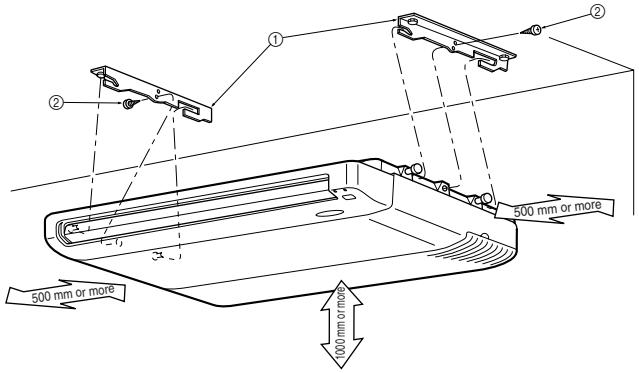

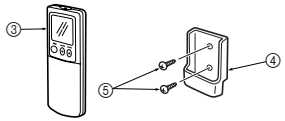

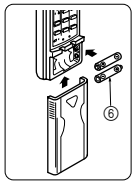

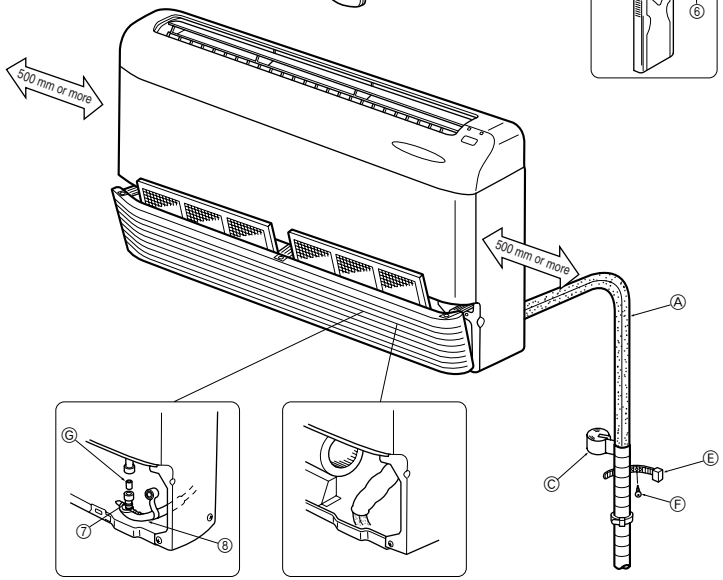

MUCF-13NV
MUCFH-13NV

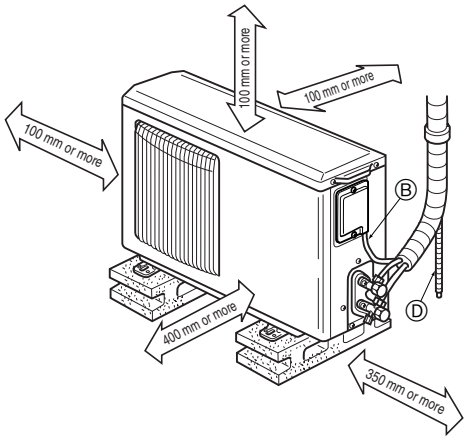

MUCF-18NV
MUCF-24NV
MUCFH-18NV

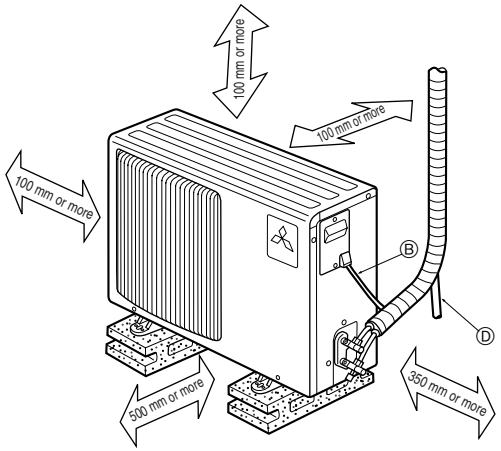

When the piping is to be attached to a wall containing metals (tin plated) or metal netting, use a chemically treated wooden piece 20 mm or thicker between the wall and the piping or wrap 7 to 8 turns of insulation vinyl tape around the piping.

Units should be installed by licensed contractor accordingly to local code requirement.

ACCESSORIES

Check the following parts before installation.
<Indoor unit>

	Item	Q'ty
①	Installation plate	2
②	Unit fixing screw 5 × 12 mm	2
③	Wireless remote controller	1
④	Remote controller mounting hardware	1
⑤	Fixing screw for ④ 3.5 × 16 mm (Black)	2
⑥	Battery (AAA) for remote controller	2
⑦	Drain hose	1
⑧	Drain pipe cover	1
⑨	Knockout cover	1
⑩	Screw for ⑨ 4 × 10 mm	2

<Outdoor unit: MUCFH type>

⑪	Drain socket	1
⑫	Drain cap ø33	2
⑬	Drain cap ø16 (only MUCFH-18NV)	1

PARTS TO BE PROVIDED AT YOUR SIDE

	Item	Q'ty
Ⓐ	Refrigerant pipe	1 set
Ⓑ	Indoor/outdoor connecting wire	1
Ⓒ	Piping tape	1
Ⓓ	Drain pipe (PVC pipe : OD ø26)	1
Ⓔ	Pipe fixing band for refrigerant pipe (The quantity depends on the pipe length.)	2 to 5
Ⓕ	Fixing screw for Ⓔ (The quantity depends on the pipe length.)	2 to 5
Ⓖ	Drain-joint pipe (PVC pipe : OD ø26, L=50 mm)	1
Ⓗ	Power supply cord	1
Ⓘ	Piping hole repair parts (Putty and Wall hole cover)	1
Ⓙ	Installation plate fixing bolt (M10)	4
Ⓚ	Nut, Spring washer for Ⓙ (M10)	4 set

OPTIONAL PARTS

Model	MCF(H)-13NV	MCF(H)-18NV	MCF-24NV
Air cleaning filter	MAC-1200FT		
Deodorizing filter	MAC-1700DF		

REFRIGERANT AND DRAINAGE PIPE SIZES

Model		MCF(H)-13NV	MCF(H)-18NV	MCF-24NV
Refrigerant pipe	**Liquid**	OD ø6.35 (1/4")		OD ø9.52 (3/8")
	Gas	OD ø12.7 (1/2")	OD ø15.88 (5/8")	
Drainage pipe		Hard PVC pipe : OD ø26 (1")		

FLARED CONNECTIONS

- This unit has flared connections on both indoor and outdoor sides.
- Refrigerant pipes are used to connect the indoor and outdoor units as shown in the figure below.
- Insulate both refrigerant and drain piping completely to prevent condensation.

Limits	
Pipe length	15 m max.
Height difference	5 m max.
No. of bends	10 max.

- Refrigerant adjustment … If pipe length exceeds 7 m, additional refrigerant (R-22) charge is required. (The outdoor unit is charged with refrigerant for 7 m pipe length.)

Pipe length	Up to 7 m	No additional charge required	–	
	Exceeding 7 m	Additional charge required	Refrigerant to be added	MCF TYPE : 15 g/m
				MCFH TYPE : 50 g/m

PIPING PREPARATION

- Refrigerant pipes of 3, 5, 7, 10 and 15 m are available as optional items.

❶ Table below shows the specifications of pipes commercially available.

Model	Pipe	Outside diameter mm	Insulation thickness mm	Insulation material
MCF(H)-13NV	For liquid	6.35	8	Heat resisting foam plastic 0.045 specific gravity
	For gas	12.7		
MCF(H)-18NV	For liquid	6.35	8	
	For gas	15.88		
MCF-24NV	For liquid	9.52	8	
	For gas	15.88		

❷ Ensure that the 2 refrigerant pipes are well insulated to prevent condensation.

❸ Refrigerant pipe bending radius must be 100 mm or more.

⚠ **Caution:**
Using careful insulation of specified thickness. Excessive thickness prevents storage behind the indoor unit and lack of thickness causes dew drippage.

4-1 A CASE OF SUSPENDING INDOOR UNIT FROM THE CEILING

4-1-(1) MOUNTING INSTALLATION PLATE FIXING BOLTS

1. Determine the locations of installation plate fixing bolts.

- Use installation pattern to determine the locations of installation plate fixing bolts Ⓙ.
  - ⓐ Installation pattern

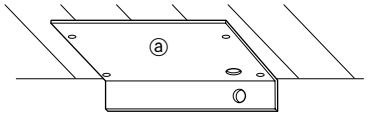

*Remove installation pattern after installation.

Details are printed on pattern.

Attention: Surrounding temperature and humidity conditions may cause paper pattern to shrink or expand. (Measure dimensions before drilling holes.)

2. Suspension structure (Give site of suspension strong structure).

■ Wood structure

- Select tie beam (one-story houses) or second-floor girder (two story houses) as reinforcement member.
- Use sturdy beams of at least 60 mm square for beam pitch of 900 mm or less or of at least 90 mm square for beam pitch of 900-1800 mm.
  - ⓐ Pitch
  - ⓑ Ceiling
  - ⓒ Rafter
  - ⓓ Bracket
  - ⓔ Roof beam

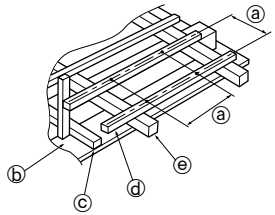

■ Ferroconcrete Structures

- Secure installation plate fixing bolts Ⓙ as shown at the right or use angle-stock bracework to install installation plate fixing bolts Ⓙ.
  - ⓕ Use inserts rated at 100-150 kg each
  - ⓖ Steel reinforcing rod
  - Ⓙ Installation plate fixing bolts

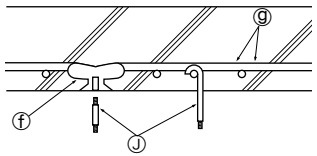

3. Installation plate fixing bolts pitch.

- Use the installation plate fixing bolts Ⓙ M10 (× 4 procure locally).
  - ⓐ Indoor unit
  - ⓑ Air outlet
  - ① Installation plate

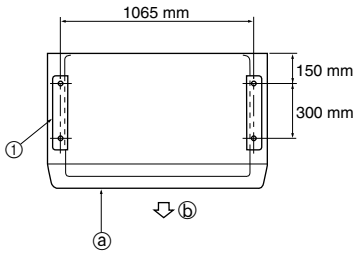

- Projecting dimension of installation fixing bolts Ⓙ from horizontal base line against which you fix installation plate ① as within at the right.
  - ⓒ Horizontal base line
  - ① Installation plate
  - Ⓙ Installation fixing bolts

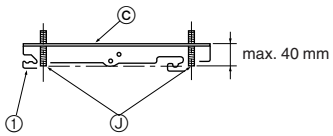

4-1-(2) FIXING OF INSTALLATION PLATES

1. Set installation plates to installation plate fixing bolts.

- Set installation plates ① to installation plate fixing bolts Ⓙ so that the distance between insides of installation plates is adjusted to length as shown in the right.
  - ① Installation plate

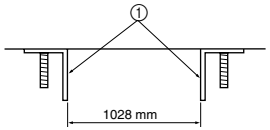

- Installation plates ① should be fixed on one way direction, as shown in Fig. 1.
  Don't fix as shown in Fig. 2.

- Be sure to confirm letters "FRONT" in installation plates ①, set "FRONT" side to air outlet side of indoor unit.
  - ⓐ "FRONT"
  - ① Installation plate

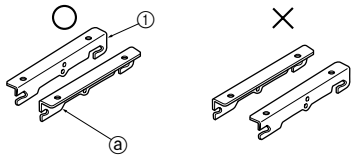

(Fig. 1) (Fig. 2)

2. In case of fixing installation plates ① above the ceiling, put installation plates fixing bolt through a nut, a spring washer, the installation plate, a spring washer, and double nut. (Fig. 3) In case of fixing installation plates ① forward the ceiling directly, also put installation plate fixing bolt through the installation plate, a spring washer, and double nuts. (Fig. 4)

- ⓐ Ceiling
- ① Installation plate
- Ⓙ Installation plate fixing bolt
- Ⓚ-1 Nut (M10)
- Ⓚ-2 Spring washer
- Ⓚ-3 Double nut (M10)

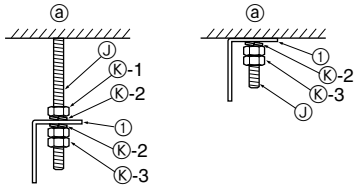

(Fig. 3) (Fig. 4)

3. Check that the four corners are horizontal with level gauge. (Fig. 5)

- ⓐ Level gauge

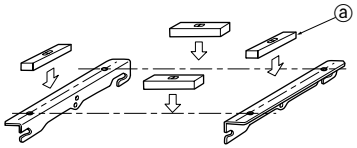

(Fig. 5)

4-1-(3) DRILLING HOLE

Determine the locations of holes for refrigerant pipe Ⓐ and drain pipe Ⓓ.

- Use the installation pattern as mentioned in 4-1-(1).
- Be sure to confirm the dimensions as shown in the right.
  - ⓐ Horizontal base line
  - ⓑ Hole for refrigerant pipe
  - ⓒ Hole for drain pipe
  - ① Installation plate

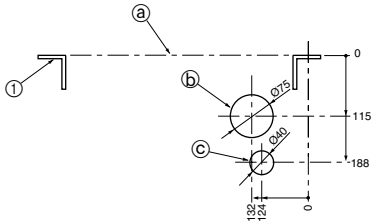

(unit : mm)

- Specially, drill the hole for drain pipe with designate dimension to keep an inclination.
  - ⓓ Horizontal base line
  - ⓔ Hanging bolt
  - ⓕ Wall

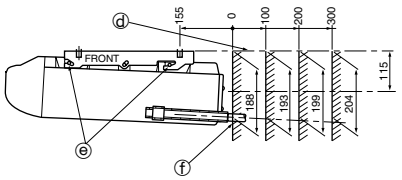

(unit : mm)

4-1-(4) FRONT GRILLE REMOVAL

- Remove front grille and transportation support.

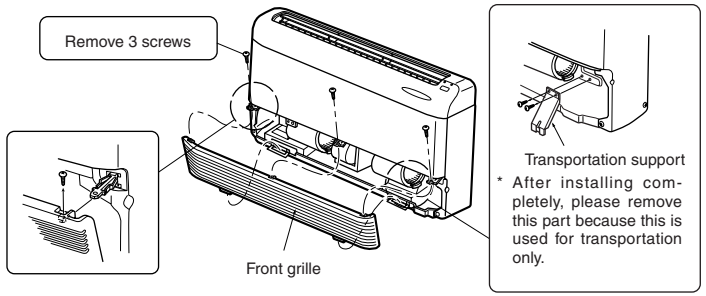

4-1-(5) OPENING KNOCKOUT HOLE

- Remove knockout holes with hammering it.

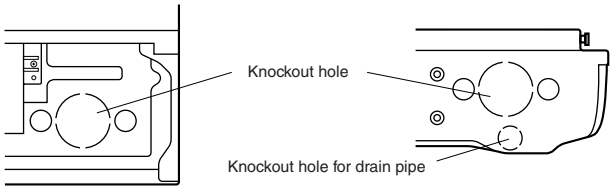

4-1-(6) FIXING UNIT TO INSTALLATION PLATES

1. Suspending unit from installation plates.

- Hoist unit so that hanging bolt (4) on the sides of unit fit into holes in installation plates ①.

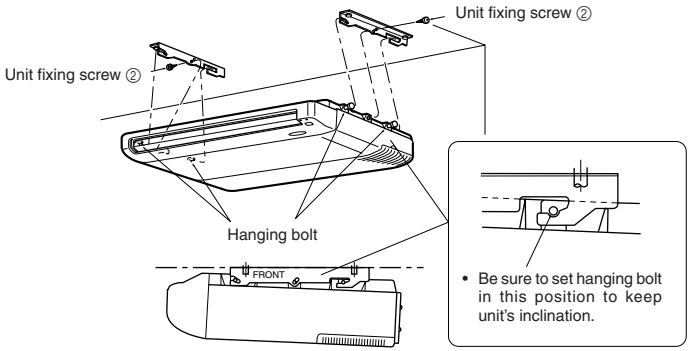

2. Securing unit to installation plates.

- Be sure to tighten unit fixing screw ② to unit securely.

4-2 A CASE OF INSTALLATING INDOOR UNIT ON THE WALL

4-2-(1) MOUNTING INSTALLATION PLATE FIXING BOLTS

1. Determine the locations of installation plate fixing bolts.

- Use installation pattern to determine the locations of installation plate fixing bolts Ⓙ.

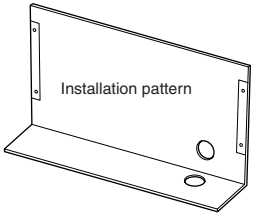

* Remove installation pattern after installing.

2. Sturdy wall

- Find structural material (such as stud) in the wall.

3. Installation plate fixing bolt pitch.

- See to 4-1-(1) 3. (Page 4)

4-2-(2) FIXING OF INSTALLATION PLATES

1. Set installation plates ① to installation plate fixing bolts Ⓙ.

- See to 4-1-(2) 1. (Page 5)

2. Put installation plate fixing bolt through spring washer (2), and double nuts.

- See to 4-1-(2) 2 Fig. 4. (Page 5)

4-2-(3) DRILLING HOLE

Determine the location of hole for refrigerant pipes and drain pipe.

- Use the installation pattern as mentioned in 4-2-(1).
- Be sure to confirm the dimensions as below.

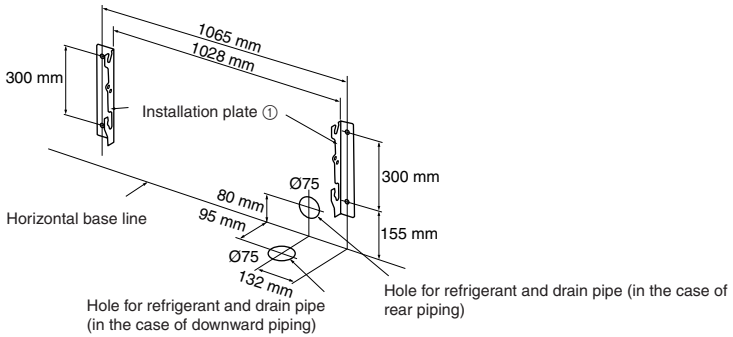

4-2-(4) FRONT GRILLE REMOVAL

- See to 4-1-(4). (Page 5)

4-2-(5) OPENING KNOCKOUT HOLE

- See to 4-1-(5). (Page 5)

4-2-(6) FIXING UNIT TO INSTALLATION PLATES

1. Suspending unit from installation plate.

- Hoist unit so that hanging bolt (4) on the sides of unit fit into holes in installation plate ①.

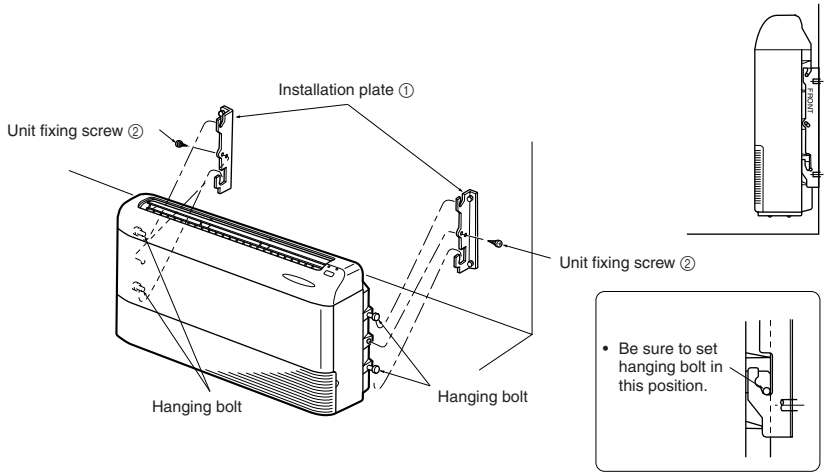

2. Securing unit to installation plates.

- Be sure to tighten unit fixing screw ② to unit securely.

4-3 KNOCKOUT COVER

- After removing the knockout holes, attach knockout cover ⑨ on the knockout hold edge (shown as below).

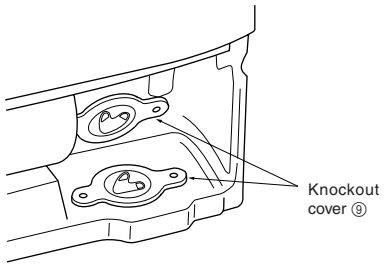

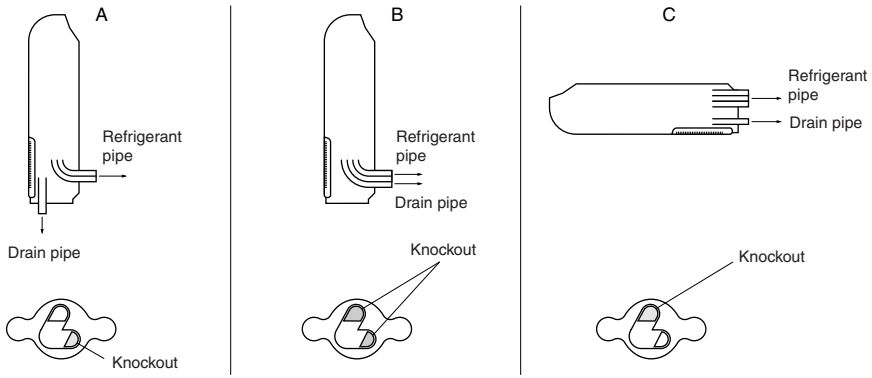

4-4 POWER SUPPLY AND CONNECTING WIRE SPECIFICATIONS

Use special room air conditioning circuit.

Rated voltage	Breaker capacity		Power supply cord
220-240 V	MCF(H)-13NV	10 A	3 core IEC wires including earth wire: 1.0 mm² or more
	MCF(H)-18NV	15 A	3 core IEC wires including earth wire: 1.5 mm² or more
	MCF-24NV	25 A	3 core IEC wires including earth wire: 2.5 mm² or more

Indoor and Outdoor connecting wire Specification	MCF(H)-13NV	1.0 mm² or more	Cable in conformity with Design 245 IEC 57 (H05RN-F).
	MCF(H)-18NV	1.5 mm² or more	
	MCF-24NV	2.5 mm² or more	

- Peel off both ends of connecting wire and power supply cord as shown in the right.
- Be careful not to contact connecting wire with piping.

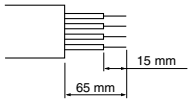

Connect to the plug, or to a power switch which has a gap of 3 mm or more when open to interrupt the source power phase.

⚠ **Warning:**

- **A means for disconnection of the supply with an isolation switch, or similar device, in all active conductors shall be incorporated in the fixed wiring.**
- **Never cut the power cord and connect it to other wires. It may cause a fire.**

4-5 INDOOR AND OUTDOOR CONNECTING WIRE CONNECTION

- Wiring connections should be made following the diagram.

1. Remove two screws and pull the terminal cover forward.
2. Be sure to fix the cable by cable clamp.
3. Replace the terminal cover securely.

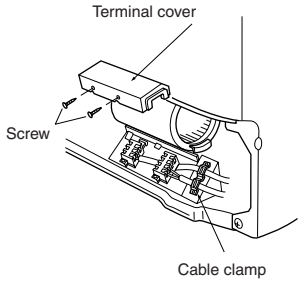

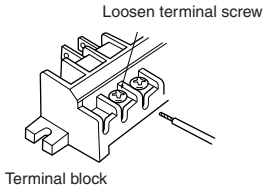

Connection details

① Use care not to make mis-wiring.
② Firmly tighten the terminal screws to prevent them from loosening.
③ After tightening, pull the wires lightly to confirm that they do not move.

<MCF-13NV/18NV>

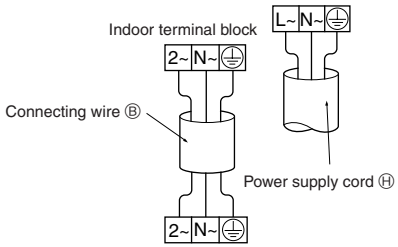

<MCF-24NV>

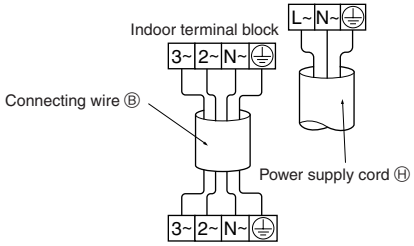

<MCFH-13NV/18NV>

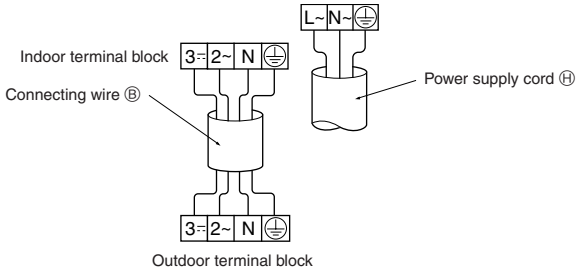

⚠ **Warning:**

- **Attach the electrical part cover securely. If it is attached incorrectly, it could result in a fire, an electric shock due to dust, water, etc.**
- **Use the specified indoor/outdoor unit connecting wire to connect the indoor and outdoor units and fix the wire to the terminal block securely so that no stress is applied to the connecting section of the terminal block. Incomplete connection or fixing of the wire could result in a fire.**
- **When connecting the power supply cord to the power supply source, be sure to connect each wire to the correct pole. Be sure to connect the Live wire side to the L~ terminal and connect the Neutral conductor side to the N~ terminal.**

4-6 REFRIGERANT PIPE WORK

- Refrigerant pipes which are connected at side of indoor unit must be processed as below, and processed figure will be differently made means of which the indoor unit is installed or which direction refrigerant pipes are connected in.

1. In case that pipes are cut out from back surface of the indoor unit. (Fig. 1)

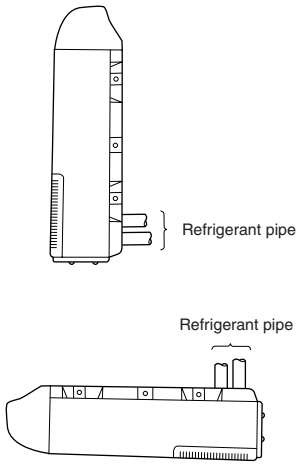

(Fig. 1)

Process figure

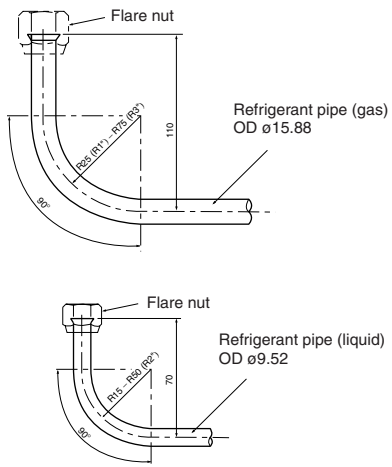

2. In case that pipes jut out from bottom surface of the indoor unit. (Fig. 2)

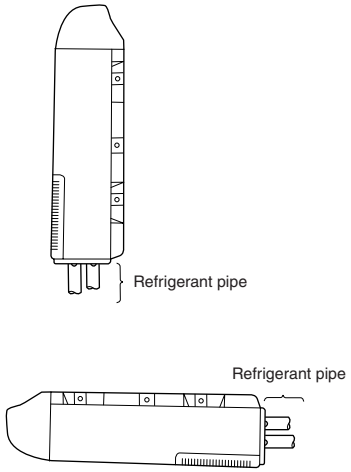

(Fig. 2)

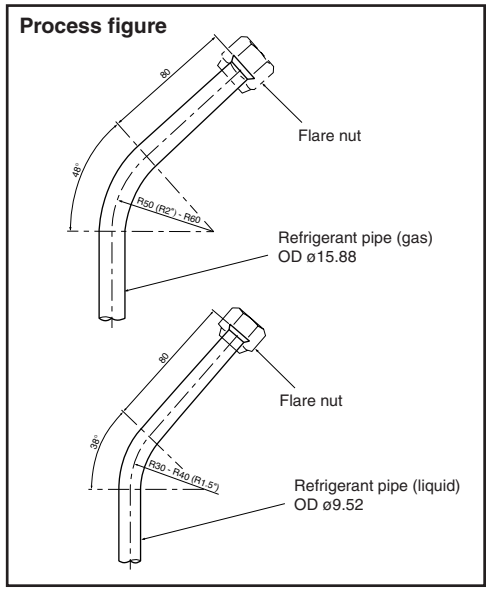

4-7 DRAIN PIPE CONNECTION

- Use hard PVC (ø26 mm O.D.) for drain pipe Ⓓ.
- Use drain pipe cover ⑧ which is provided in accessories, wind it around drain pipe Ⓓ in the indoor unit side.
- Use vinyl chloride adhesive for joints prevent leakage.
- When the drain pipe Ⓓ has to go through an indoor space, be sure to cover the drain pipe Ⓓ with insulation readily available in the market.
- For drain pipe connection, use care so as no extra force applies to unit side piping.

1. In case of connecting drain pipe Ⓓ to drain-joint bush directly.

- Be sure to connect drain pipe Ⓓ to drain-joint bush securely as shown in the right.
- Be sure to pass drain pipe Ⓓ with drain pipe cover through knockout hole on bottom surface so as to keep an inclination.
  - ⓐ Drain-joint bush
  - ⓑ Knockout
  - ⓒ PVC adhesive tape
  - ⓓ Adhesive
  - ⑧ Drain pipe cover
  - Ⓓ Drain pipe (VP-20)

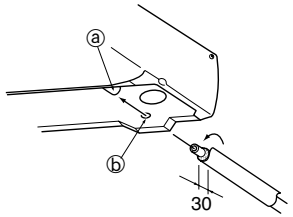

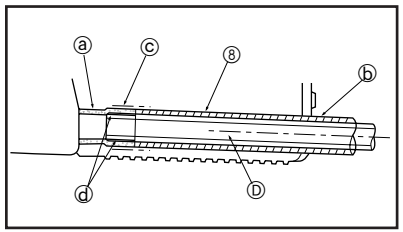

2. In case of connecting drain pipe Ⓓ to drain-joint bush through drain hose.

- Drain hose ⑦ which is contained in accessories is flexible, so use it when drain pipe Ⓓ should be alternated direction.
- Be sure to wind pipe cover which is provided in accessories around drain hose with vinyl tape.
- Cut VP-20 in dimension as shown at the right, and connect drain-joint bush with drain hose with adhesive.
  - ⓐ Drain-joint bush
  - ⓑ Tape
  - ⓒ Adhesive
  - ⑦ Drain hose
  - ⑧ Drain pipe cover
  - Ⓓ Drain pipe (VP-20)
  - Ⓖ Drain-joint pipe (VP-20)

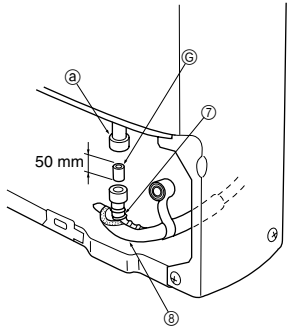

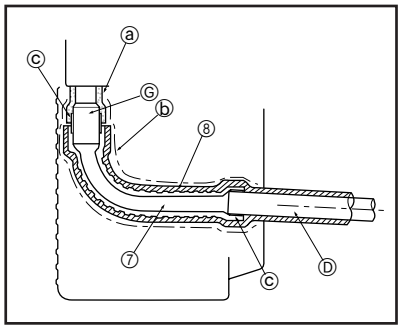

3.

- Be sure that drain pipe Ⓓ tilts downward (1/100 or more) on outdoor side (drain side), and no traps or heaving exist.
- When the drain pipe Ⓓ is relatively long, provide support metal fixtures midway to eliminate waving.
- Odor trap at the end of drain pipe Ⓓ is not required.
  - ⓐ Insulation
  - ⓑ Supporting metal fixture
  - ⓒ Downward inclination of 1/100 or more
  - ⓓ Air bleeder
  - ⓔ Do not raise
  - ⓕ Odor trap
  - ⓖ The end of drain hose is immersed in water
  - ⓗ Gap from the ground level is 50 mm or less
  - ⓘ Sewage ditch

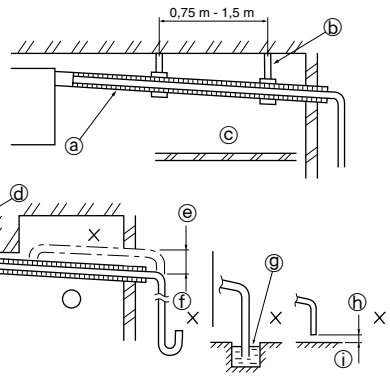

INDOOR AND OUTDOOR WIRE CONNECTION

- Connect the indoor/outdoor unit connecting wire Ⓑ from the indoor unit correctly on the terminal block.
- For future servicing, give extra length to connecting wire.

- Peel off both ends of connecting wire as shown in the right.
- Be careful not to contact connecting wire with piping.

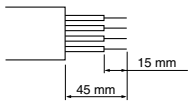

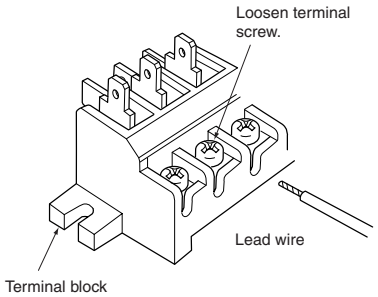

<Connection details>

<MUCF-13NV/18NV>

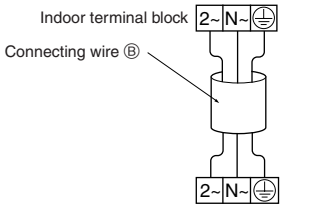

<MUCF-24NV>

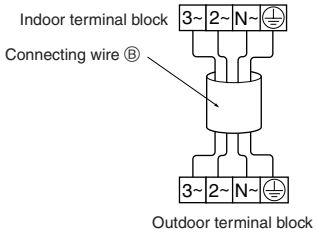

<MUCFH-13NV/18NV>

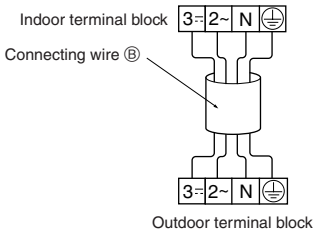

⚠ **Caution:**
- **Be careful not to make mis-wiring.**
- **Firmly tighten the terminal screws to prevent them from loosening.**
- **After tightening, pull the wires lightly to confirm that they do not move.**
- **If the connecting wire is incorrectly connected to the terminal block, the unit does not operate normally.**

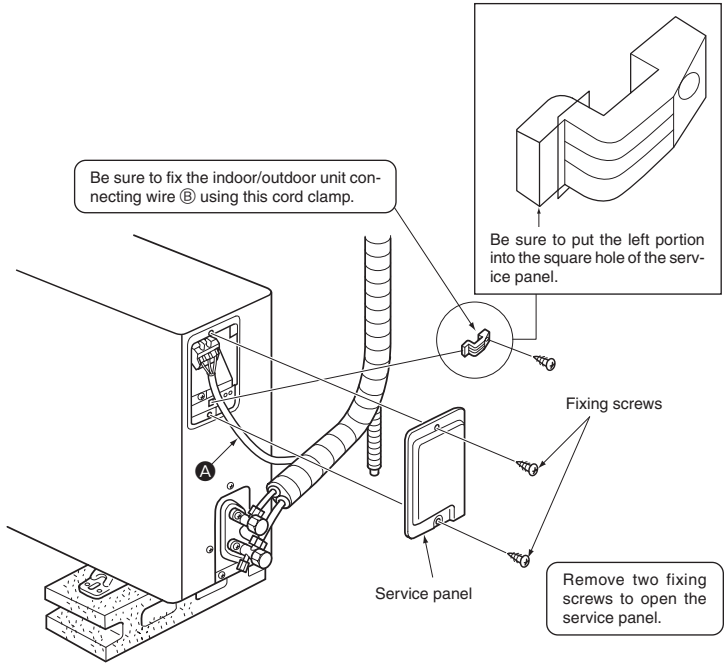

⚠ **Warning:**
Be sure to attach the service panel of the outdoor unit securely. If it is not attached correctly, it could result in fire or an electric shock due to dust, water, etc.

6. INDOOR/OUTDOOR UNIT CONNECTION FINISHING AND TEST RUN

6-1 FLARING WORK

- Main cause of gas leakage is defect in flaring work.
  Perform flaring work correctly in the following procedure.

1. Pipe cutting

- Cut the copper pipe correctly with a pipe cutter.
  - ⓐ Copper pipe
  - ⓑ Good
  - ⓒ No good
  - ⓓ Tilted
  - ⓔ Uneven
  - ⓕ Burred

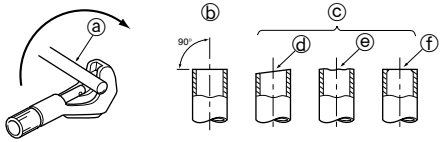

2. Burrs removal

- Completely remove all burrs from the cut cross section of the pipe.
- Put the end of the copper pipe downward to prevent burrs from dropping in the pipe.
  - ⓐ Burr
  - ⓑ Copper pipe
  - ⓒ Spare reamer
  - ⓓ Pipe cutter

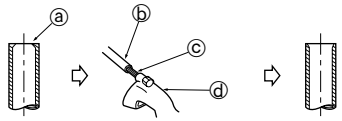

3. Putting nut on

- Remove flare nuts attached to indoor and outdoor unit, then put them on pipe having completed burr removal.
  (not possible to put them on after flaring work)
  - ⓐ Flare nut
  - ⓑ Copper pipe

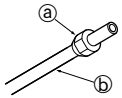

4. Flaring work

- Perform flaring work using flaring tool as shown in the right.

Outside diameter	A
mm	mm
6.35	2.0-2.5
9.52	3.0-3.5
12.7	3.5-4.0
15.88	3.5-4.0

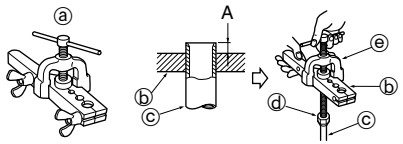

Firmly hold copper pipe in a die in the dimension shown in the table above.

- ⓐ Flaring tool
- ⓑ Die
- ⓒ Copper pipe
- ⓓ Flare nut
- ⓔ York

5. Check

- Compare the flared work with a figure in the right.
- If flare is noted to be defective, cut off the flared section and perform flaring work again.
  - ⓐ Smooth all around
  - ⓑ Inside is shining without any scratches
  - ⓒ Even length all around

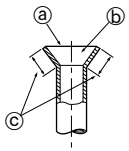

6-2 PIPE CONNECTION

1. Indoor unit connection

- Connect both liquid and gas piping to the indoor unit.
  - Apply a thin coat of refrigerant oil on the seat surface of pipe.
  - For connection first align the center, then hand tighten the first 3 to 4 turns of flare nut.
  - Use tightening torque table below as a guideline for the indoor unit side union joint section, and tighten using two wrenches. Excess tightening damages the flared section.

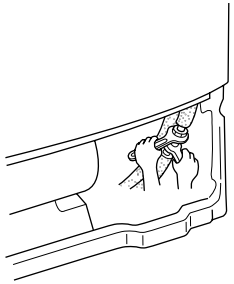

Pipe diameter	Tightening torque	
mm	N·m	kgf·cm
6.35	13.7 to 17.7	140 to 180
9.52	34.3 to 41.2	350 to 420
12.7	49.0 to 56.4	500 to 575
15.88	73.5 to 78.4	750 to 800

2. Outdoor unit connection

- Connect pipes to stop valve pipe joint of the outdoor unit in the same manner applied for the indoor unit.
  - For tightening, use a torque wrench or spanner, and use the same tightening torque applied for the indoor unit.

3. Refrigerant pipe insulation

- Use pipe cover (foam polyethylene 8 mm thickness) which is contained in accessories, insulate both liquid and gas pipes together. Put the refrigerant piping and apply piping tape Ⓒ.
  - ⓐ Indoor unit refrigerant pipe
  - ⓑ Flare joint
  - ⓓ Pipe cover
  - Ⓐ Refrigerant pipe
  - Ⓒ Piping tape

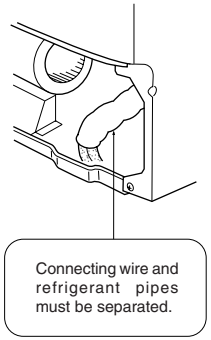

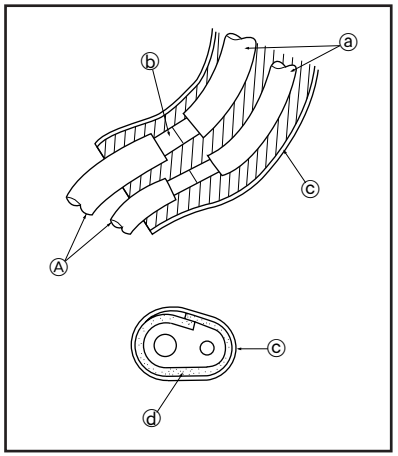

4. Knockout cover

- Attach knockout cover ⑨ to close knockout hole to prevent rat or something strange from getting into the indoor unit.
  - ⑨ Knockout cover
  - ⑩ Screw for ⑨ 4 × 10 mm

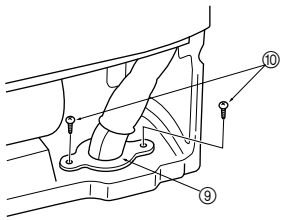

6-3 PURGING PROCEDURES · LEAK TEST

PURGING PROCEDURES

↓

Connect the refrigerant pipes (both the liquid pipe and the gas pipe) between the indoor and the outdoor unit.

↓

Remove the service port cap of the stop valve on the gas pipe side of the outdoor unit.
(The stop valve will not work in it initial state fresh out of the factory (totally closed with cap on).)

↓

Connect the gauge manifold valve and the vacuum pump to the service port of the stop valve on the gas pipe side of the outdoor unit.

↓

Run the vacuum pump. (Vacuumize for more than 15 minutes.)

↓

Check the vacuum with the gauge manifold valve, then close the gauge manifold valve and stop the vacuum pump.

↓

Leave as it is for one or two minutes. Make sure the pointer gauge manifold valve remains in the same position. Confirm that the pressure gauge shows –0.101 Mpa [Gauge] (–760 mmHg).

↓

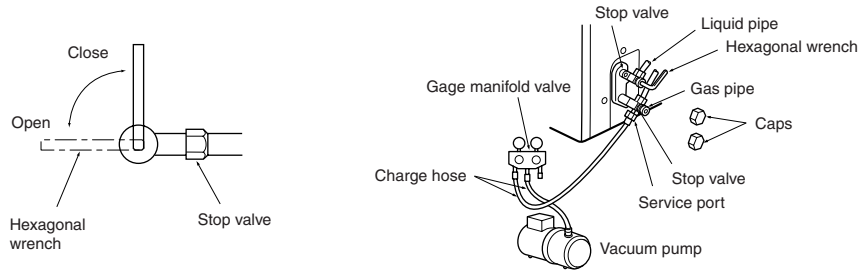

↓

Remove the gauge manifold valve quickly from the service port of the stop valve.

↓

After refrigerant pipes are connected and evacuated, fully open all stop valves on both sides of gas pipe and liquid pipe.
Operating without fully opening lowers the performance and this causes trouble.

↓

Pipe length up to 7 m No gas charge is needed.	Pipe length exceeding 7 m Charge the prescribed amount of gas. (refer to 3)

↓

Tighten the cap to the service port to obtain the initial status.

↓

Retighten the cap

↓

Leak test

6-4 TEST RUN

- Before performing the test run, recheck for any wrong wiring.
  Wrong wiring prevents normal operation or results in blown fuse disabling operation.
- The test run can be initiated by using EMERGENCY OPERATION switch (press button switch). The EMERGENCY OPERATION switch is pressed, the unit will start the test run (continuous operation) for 30 minutes in COOL MODE or HEAT MODE, depending on which mode is selected. During this 30 minutes a thermostat does not work. After 30 minutes the unit will start the EMERGENCY OPERATION at fixed temperature setting of 24°C in COOL MODE or HEAT MODE.
- Perform test run in the following procedure.

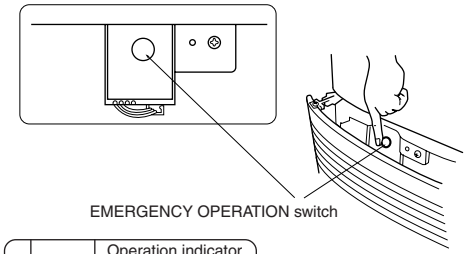

PROCEDURE

<MCF-13/18/24NV>

- Press the EMERGENCY OPERATION switch.
  ① Press it once, and the EMERGENCY COOL MODE starts.
  ② Press it once more, and the operation stops.
  (The operation mode changes ① and ② by turns every press of the EMERGENCY OPERATION switch.)

	Mode	Operation indicator lamp	
①	COOL	(Light)	(Off)
②	STOP	(Lights not turn on)	

<MCFH-13/18NV>

- Press the EMERGENCY OPERATION switch.
  ① Press it once, and the EMERGENCY COOL MODE starts.

> If the left side lamp of the operation indicator blinks every 0.5 seconds, inspect the in/out connecting wire Ⓐ for mis-wiring.

  ② Press it once more, and the EMERGENCY HEAT MODE starts.
  ③ Press it once more, and the operation stops.
  (The operation mode changes in order of ① - ③ every press of the EMERGENCY OPERATION switch.)

	Mode	Operation indicator lamp	
①	COOL	(Light)	(Off)
②	HEAT	(Off)	(Light)
③	STOP	(Lights not turn on)	

Checking the remote (infrared) signal reception

Press the ON/OFF button on the remote control and check that an electronic sound is heard from the indoor unit. Press the ON/OFF button again to turn the air conditioner off.

> If the indoor unit is operated with the remote control, both the trial and emergency operations are released by commands from the remote control.

- Once the compressor stops, the restart preventive device operates so the compressor will not operate for 3 minutes to protect the air conditioner.

6-5 AUTO RESTART FUNCTION

When the indoor unit is controlled with the remote controller, the operation mode, set temperature, and the fan speed are memorized by the indoor electronic control P.C. board. The auto restart function sets to work the moment the power has restored after power failure, then, the unit will restart automatically. If the unit is operated in "I FEEL CONTROL" mode before power failure, the operation is not memorized. In "I FEEL CONTROL" mode, the operation is decided by the initial room temperature at (re)start.

Notes:
- The operation settings are memorized when 10 seconds have passed after the remote controller was operated.
- If the main power is turned off or a power failure occurs while AUTO START/STOP timer is active, the timer setting is cancelled. As this model is equipped with the auto restart function, the air conditioner should start operating at the same time that a power has restored.
- If the unit has been off with the remote controller before power failure, the auto restart function does not work as the power button of the remote controller is off.
- To prevent breaker off due to the rush of starting current, systematize other home appliance not to turn on at the same time.

6-6 EXPLANATION TO THE CUSTOMER

- Using the instruction manual, explain the following to the customer how to control temperature, how to remove the air filters, how to remove or put the remote controller in the remote controller mounting hardware, how to clean, precautions, etc.
- Recommend the customer to carefully read the Operating Instruction Book.

7-1 FRONT PANEL REMOVAL

1. Remove front grill.
- Remove 3 screws. (See to 4-1-(4)) (Page 5).

2. Remove front panel.
- Remove 10 screws as shown in the right.
- Unlock front panel by pulling it toward yourself (①) and then pull it down as the arrow (②).
- After removing the front panel, it is possible to service many parts.

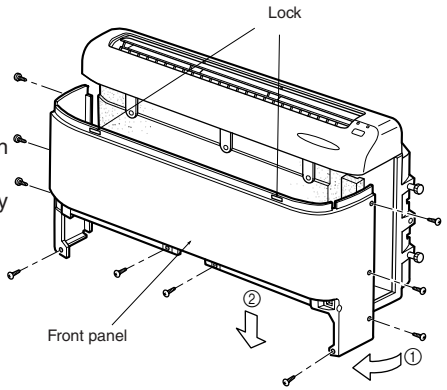

7-2 GAS CHARGE

1. Connect gas cylinder to the service port of outdoor unit.
2. Execute air purge of the pipe (or hose) coming from refrigerant gas cylinder.
3. Replenish specified amount of refrigerant, while running the air conditioner for cooling.

⚠ Caution:
Never charge liquid refrigerant, such as by inverting the gas cylinder while charging, otherwise troubles may be generated.

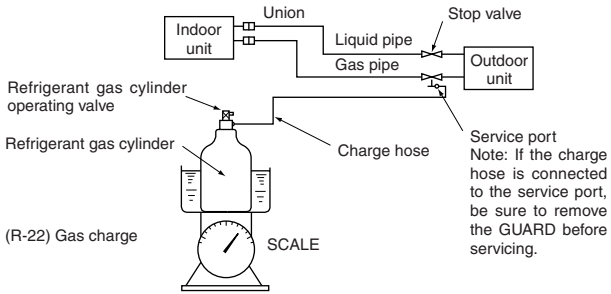

To maintain the high pressure of the gas cylinder, warm it with warm water (under 40°C) during cold season. But never use naked fire or steam.

This product is designed and intended for use in the residential, commercial and light-industrial environment.

The product at hand is based on the following EU regulations:

- Low Voltage Directive 73/23/ EEC
- Electromagnetic Compatibility Directive 89/ 336/ EEC

MITSUBISHI ELECTRIC CORPORATION
HEAD OFFICE MITSUBISHI DENKI BLDG MARUNOUCHI TOKYO 100-8310 TELEX J24532 CABLE MELCO TOKYO

VN79A008H01