Changes for the Better

SERVICE PARTS LIST FOR MITSUBISHI ELECTRIC PACKAGED AIR-CONDITIONERS

Series : PUHN-YEM-A(-BS,-BF)
PUHN-YEMK-A

REVISED

Feb. 2006

BWE0326A

INDEX

PUHN-200YEM-A

PUHN-250YEM-A

PUHN-200YEM-A-BS

PUHN-250YEM-A-BS

PUHN-200YEM-A-BF

PUHN-250YEM-A-BF

PUHN-200YEMK-A

PUHN-250YEMK-A

MITSUBISHI ELECTRIC

Please change the old catalog (issued Aug. 2003, No.BWE03260) to this new catalog.
Content of revision : Some of parts are changed.

EXTERNAL PARTS & BLOWER PARTS

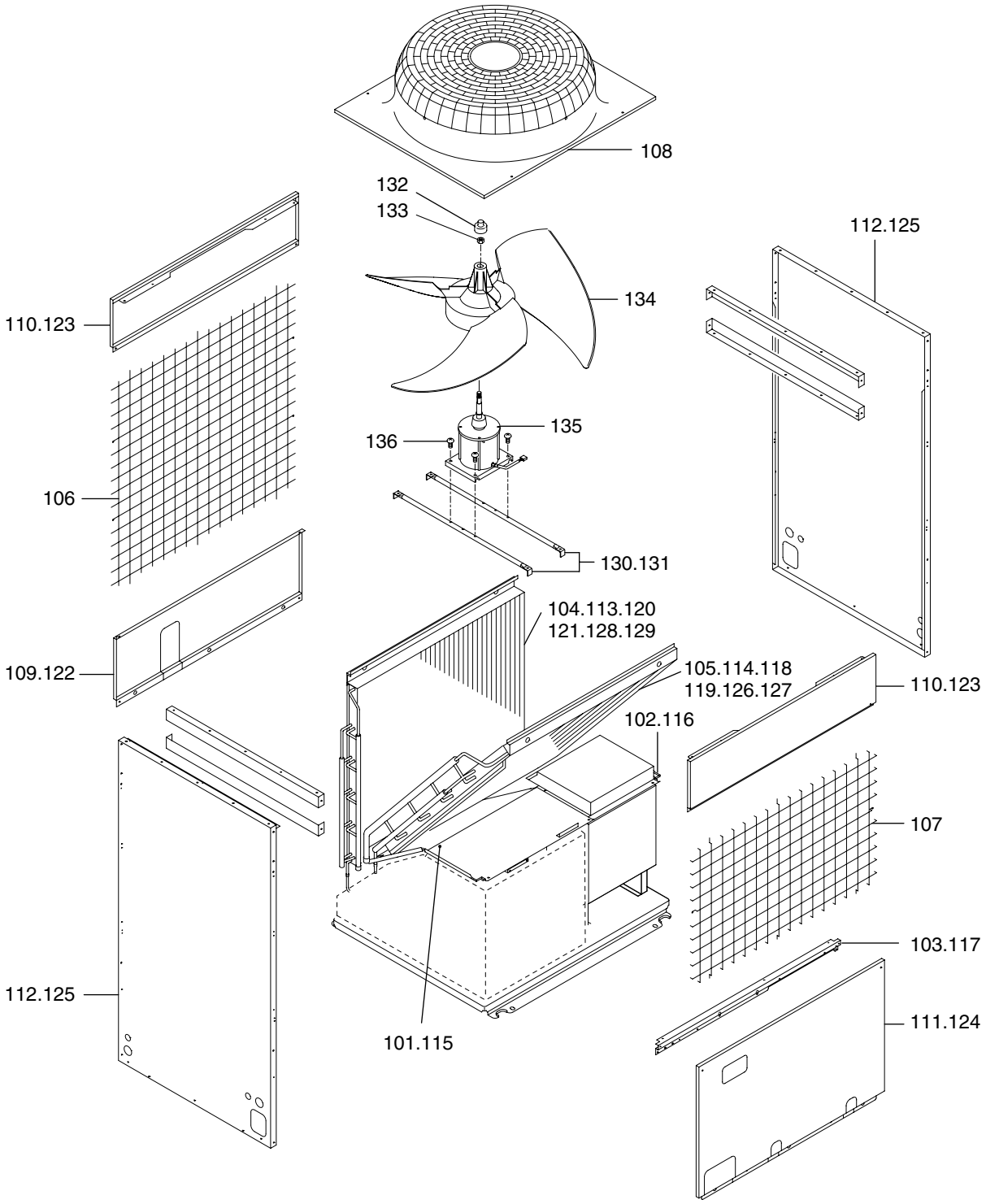

EXTERNAL PARTS & BLOWER PARTS

No.	Part No.	RoHS Compliant : G	Part Name	Spec.	-200YEM-A	-250YEM-A	-200YEM-A-BS	-250YEM-A-BS	Dwg. No.	Price	Revision History
101	R61 A64 667		Partition board L assy		1	1			W856139G34		
102	R61 F48 667		Partition board R assy		1	1			W856138G34		
103	R61 A42 659		Front panel		1	1			W615888H18		
104	R61 Y47 480		Heat exchanger assy B(8)		1				W265760G20		
105	R61 Y85 480		Heat exchanger assy F(8)		1				W265757G22		
106	R61 A42 638		Guard B assy		1	1	1	1	W265789G01		
107	R61 E66 611		Guard F assy		1	1	1	1	W265788G01		
108	R61 N78 118		Fan guard	With the Drum	1	1	1	1	W126832G02		A
109	R61 M43 677		Panel B assy		1	1			W857426G21		
110	R61 L78 653		Panel FU		2	2			W633746H06		
111	R61 Y13 652		Panel F		1	1			W857425G26		
112	R61 N78 661		Panel S		2	2			W272421H01		
113	R61 Y48 480		Heat exchanger assy B(10)			1			W265761G30		
114	R61 Y50 480		Heat exchanger assy F(10)			1			W265759G31		
115	R61 A67 667		Partition board L assy				1	1	W856139G27		
116	R61 F49 667		Partition board R assy				1	1	W856138G27		
117	R61 A43 659		Front panel				1	1	W615888G09		
118	R61 G48 481		Heat exchanger assy F(8)				1		W265757G26		
119	R61 G50 481		Heat exchanger assy F(10)					1	W265759G37		
120	R61 G48 480		Heat exchanger assy B(8)				1		W265760G23		
121	R61 G50 480		Heat exchanger assy B(10)					1	W265761G35		
122	R61 M44 677		Panel B assy				1	1	W857426G28		
123	R61 N78 653		Panel FU				2	2	W633746G06		
124	R61 Y14 652		Panel F				1	1	W857425G38		
125	R61 N78 662		Panel S				2	2	W272421G02		
126	R61 Y75 480		Heat exchanger assy F(16)						W265757G27		
127	R61 Y76 480		Heat exchanger assy F(20)						W265759G38		
128	R61 Y77 480		Heat exchanger assy B(16)						W265760G24		
129	R61 Y78 480		Heat exchanger assy B(20)						W265761G36		
130	R61 A42 140		Fan stand		2	2			W856127G05		
131	R61 A43 140		Fan stand				2	2	W856127G06		
132	R61 A69 086		Cap		1	1	1	1	P221056X01		
133	R63 A42 122	G	Nut 16		1	1	1	1	P541016X01		A
134	R61 N78 115		Propeller fan	750D	1	1	1	1	W126814G01		
135	R61 Y33 221		Motor	YD380VB<MF>	1	1	1	1	P714762X01		
136	R63 E90 087	G	Screw	6X14	4	4	4	4	P521020X01		A

EXTERNAL PARTS & BLOWER PARTS

No.	Part No.	RoHS Compliant : G	Part Name	Spec.	-200YEM-A-BF	-250YEM-A-BF	-200YEMK-A	-250YEMK-A	Dwg. No.	Price	Revision History
101	R61 A64 667		Partition board L assy		1	1	1	1	W856139G34		
102	R61 F48 667		Partition board R assy		1	1	1	1	W856138G34		
103	R61 A42 659		Front panel		1	1	1	1	W615888H18		
104	R61 Y47 480		Heat exchanger assy B(8)						W265760G20		
105	R61 Y85 480		Heat exchanger assy F(8)						W265757G22		
106	R61 A42 638		Guard B assy		1	1	1	1	W265789G01		
107	R61 E66 611		Guard F assy		1	1	1	1	W265788G01		
108	R61 N78 118		Fan guard	With the Drum	1	1	1	1	W126832G02		A
109	R61 M43 677		Panel B assy		1	1	1	1	W857426G21		
110	R61 L78 653		Panel FU		2	2	2	2	W633746H06		
111	R61 Y13 652		Panel F		1	1	1	1	W857425G26		
112	R61 N78 661		Panel S		2	2	2	2	W272421H01		
113	R61 Y48 480		Heat exchanger assy B(10)						W265761G30		
114	R61 Y50 480		Heat exchanger assy F(10)						W265759G31		
115	R61 A67 667		Partition board L assy						W856139G27		
116	R61 F49 667		Partition board R assy						W856138G27		
117	R61 A43 659		Front panel						W615888G09		
118	R61 G48 481		Heat exchanger assy F(8)						W265757G26		
119	R61 G50 481		Heat exchanger assy F(10)						W265759G37		
120	R61 G48 480		Heat exchanger assy B(8)						W265760G23		
121	R61 G50 480		Heat exchanger assy B(10)						W265761G35		
122	R61 M44 677		Panel B assy						W857426G28		
123	R61 N78 653		Panel FU						W633746G06		
124	R61 Y14 652		Panel F						W857425G38		
125	R61 N78 662		Panel S						W272421G02		
126	R61 Y75 480		Heat exchanger assy F(16)		1		1		W265757G27		
127	R61 Y76 480		Heat exchanger assy F(20)			1		1	W265759G38		
128	R61 Y77 480		Heat exchanger assy B(16)		1		1		W265760G24		
129	R61 Y78 480		Heat exchanger assy B(20)			1		1	W265761G36		
130	R61 A42 140		Fan stand		2	2	2	2	W856127G05		
131	R61 A43 140		Fan stand						W856127G06		
132	R61 A69 086		Cap		1	1	1	1	P221056X01		
133	R63 A42 122	G	Nut 16		1	1	1	1	P541016X01		A
134	R61 N78 115		Propeller fan	750D	1	1	1	1	W126814G01		
135	R61 Y33 221		Motor	YD380VB<MF>	1	1	1	1	P714762X01		
136	R63 E90 087	G	Screw	6X14	4	4	4	4	P521020X01		A

FUNCTIONAL PARTS

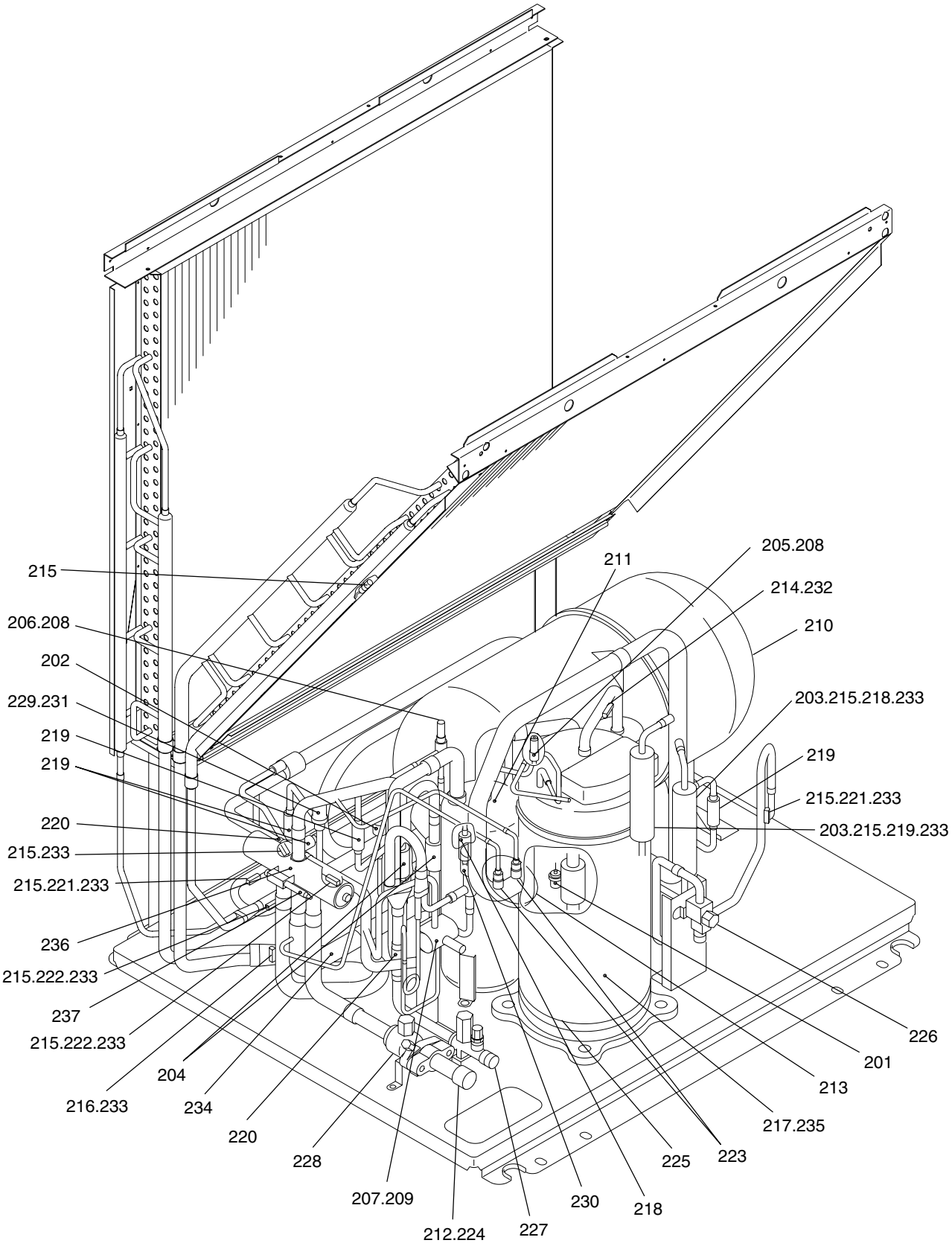

FUNCTIONAL PARTS

No.	Part No.	RoHS Compliant : G	Part Name	Spec.	-200YEM-A	-250YEM-A	-200YEM-A-BS	-250YEM-A-BS	Dwg. No.	Price	Revision History
201	R61 Y06 208		Pressure switch	<63H1>	1	1	1	1	P426258X02		
202	R61 G35 288		Pressure sensor	<63LS>	1	1	1	1	P419129X01		
203	R61 Y01 237		Liquid level detecting heater	<CH2,3>	1	1	1	1	P493553X02		
204	R61 436 418		Check valve		2	2	2	2	P639808X01		
205	R61 435 232		Solenoid valve	NEV202DXF	1	1	1	1	P631807X02		
206	R61 800 232		Solenoid valve	NEV603DXF	1	1	1	1	P631805X01		
207	R61 449 232		Solenoid valve	SB18PF-M	1	1	1	1	P631818X03		
208	R61 Y04 243		Solenoid valve coil type NEV	<SV1,4>	2	2	2	2	P631205X01		
209	R61 Y03 232		Solenoid valve coil type SB18	<SV5b>	1	1	1	1	P631246X01		
210	R61 Y40 484		Accumulator assy		1	1	1	1	W266582G08		
211	R61 P66 487		Oil separator assy		1	1	1	1	W267372G05		A
212	R61 E91 494		Pipe assy		1	1	1	1	W619465G05		
213	R61 F48 425		Capillary tube assy	1.2X3.0-1000	1	1	1	1	W864648G02		
214	R61 911 202		Thermistor	<TH11>	1	1	1	1	P425416X02		
215	R61 670 202		Thermistor	(NTH3A14)<TH3~9,TH10b>	8	8	8	8	P425496X01		
216	R61 800 202		Thermistor	(NTH3A23-3)<TH10a>	1	1	1	1	P425494X01		
217	R69 954 478		Scroll compressor	ZH133YDA1	1		1		EP10017G05		
218	R61 155 454		Strainer	6.35D	2	2	2	2	W882822G01		
219	R61 A42 454		Strainer	9.52D	5	5	5	5	W882823G01		
220	R61 Y02 454		Strainer		2	2	2	2	W858399G02		
221	R61 A45 287		Sensor cover	(EVA)12.7D	2	2	2	2	P227171X01		
222	R61 A43 287		Sensor cover	(EVA)16D	2	2	2	2	P227172X01		
223	R63 800 413	G	Charging plug		2	2	2	2	A50U666H04		A
224	R61 F14 514		Packing		1	1	1	1	P321009X01		
225	R61 Y08 237		Belt heater	2140V 56W<CH11>	1	1	1	1	P493782X01		
226	R61 F48 410		Ball valve	1/2	1	1	1	1	P636222X01		
227	R61 694 410		Ball valve	1/2	1	1	1	1	P636175X01		
228	R61 Y07 410		Ball valve		1	1	1	1	P636271X01		
229	R61 G48 401		Linear expansion valve	DKV-18D124<LEV1>	1	1	1	1	P632342X01		
230	R63 256 401	G	Linear expansion valve	(EDM-804)<LEV2>	1	1	1	1	P632292X01		A
231	R61 A45 401		Linear expansion valve coil	(Red)<LEV1>	1	1	1	1	P472017X01		A
232	R11 347 865		L.TH spring		1	1	1	1	U38D120H03		
233	R13 658 276		TH spring		8	8	8	8	C38D815H01		
234	R61 G49 494		Pipe		1	1	1	1	W864478H03		
235	R69 956 478		Scroll compressor	ZH165YDA1		1		1	EP10028G07		
236	R61 E37 154		Four way valve		1	1	1	1	P633101X01		
237	R61 Y03 242		Four way valve coil	<21S4>	1	1	1	1	P633078X01		

FUNCTIONAL PARTS

No.	Part No.	RoHS Compliant : G	Part Name	Spec.	-200YEM-A-BF	-250YEM-A-BF	-200YEMK-A	-250YEMK-A	Dwg. No.	Price	Revision History
201	R61 Y06 208		Pressure switch	<63H1>	1	1	1	1	P426258X02		
202	R61 G35 288		Pressure sensor	<63LS>	1	1	1	1	P419129X01		
203	R61 Y01 237		Liquid level detecting heater	<CH2,3>	1	1	1	1	P493553X02		
204	R61 436 418		Check valve		2	2	2	2	P639808X01		
205	R61 435 232		Solenoid valve	NEV202DXF	1	1	1	1	P631807X02		
206	R61 800 232		Solenoid valve	NEV603DXF	1	1	1	1	P631805X01		
207	R61 449 232		Solenoid valve	SB18PF-M	1	1	1	1	P631818X03		
208	R61 Y04 243		Solenoid valve coil type NEV	<SV1,4>	2	2	2	2	P631205X01		
209	R61 Y03 232		Solenoid valve coil type SB18	<SV5b>	1	1	1	1	P631246X01		
210	R61 Y40 484		Accumulator assy		1	1	1	1	W266582G08		
211	R61 P66 487		Oil separator assy		1	1	1	1	W267372G05		A
212	R61 E91 494		Pipe assy		1	1	1	1	W619465G05		
213	R61 F48 425		Capillary tube assy	1.2X3.0-1000	1	1	1	1	W864648G02		
214	R61 911 202		Thermistor	<TH11>	1	1	1	1	P425416X02		
215	R61 670 202		Thermistor	(NTH3A14)<TH3~9,TH10b>	8	8	8	8	P425496X01		
216	R61 800 202		Thermistor	(NTH3A23-3)<TH10a>	1	1	1	1	P425494X01		
217	R69 954 478		Scroll compressor	ZH133YDA1	1		1		EP10017G05		
218	R61 155 454		Strainer	6.35D	2	2	2	2	W882822G01		
219	R61 A42 454		Strainer	9.52D	5	5	5	5	W882823G01		
220	R61 Y02 454		Strainer		2	2	2	2	W858399G02		
221	R61 A45 287		Sensor cover	(EVA)12.7D	2	2	2	2	P227171X01		
222	R61 A43 287		Sensor cover	(EVA)16D	2	2	2	2	P227172X01		
223	R63 800 413	G	Charging plug		2	2	2	2	A50U666H04		A
224	R61 F14 514		Packing		1	1	1	1	P321009X01		
225	R61 Y08 237		Belt heater	2140V 56W<CH11>	1	1	1	1	P493782X01		
226	R61 F48 410		Ball valve	1/2	1	1	1	1	P636222X01		
227	R61 694 410		Ball valve	1/2	1	1	1	1	P636175X01		
228	R61 Y07 410		Ball valve		1	1	1	1	P636271X01		
229	R61 G48 401		Linear expansion valve	DKV-18D124<LEV1>	1	1	1	1	P632342X01		
230	R63 256 401	G	Linear expansion valve	(EDM-804)<LEV2>	1	1	1	1	P632292X01		A
231	R61 A45 401		Linear expansion valve coil	(Red)<LEV1>	1	1	1	1	P472017X01		A
232	R11 347 865		L.TH spring		1	1	1	1	U38D120H03		
233	R13 658 276		TH spring		8	8	8	8	C38D815H01		
234	R61 G49 494		Pipe		1	1	1	1	W864478H03		
235	R69 956 478		Scroll compressor	ZH165YDA1		1		1	EP10028G07		
236	R61 E37 154		Four way valve		1	1	1	1	P633101X01		
237	R61 Y03 242		Four way valve coil	<21S4>	1	1	1	1	P633078X01		

PUHN-200,250YEM-A(-BS,-BF)
PUHN-200,250YEMK-A

CONTROL BOX PARTS

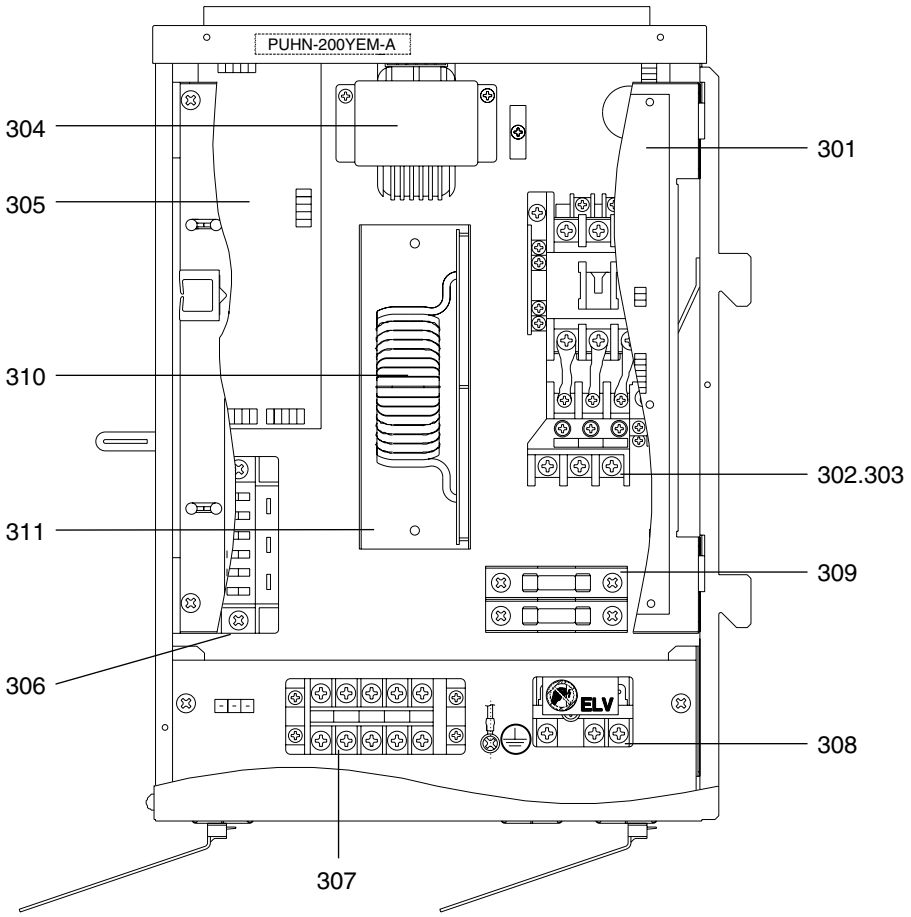

No.	Part No.	RoHS Compliant : G	Part Name	Spec.	-200YEM-A	-250YEM-A	-200YEM-A-BS	-250YEM-A-BS	Dwg. No.	Price	Revision History
301	R61 Y58 280		Controller board		1	1	1	1	W266236G02		
302	R61 Y32 225		Magnetic starter	PAK-35JT-F	1		1		S427025H83		A
303	R61 Y36 225		Magnetic starter	PAK-35JT-F		1		1	S427025H84		A
304	R61 Y18 260		Transformer	230V/21.7V	1	1	1	1	P715326X01		
305	R61 Y47 280		FANCON board		1	1	1	1	W629556G01		
306	R61 Y07 320		SCRM	PFB15AA120	1	1	1	1	S414032H01		
307	R63 Y02 246	G	Terminal block	LVD	1	1	1	1	P436135X01		A
308	R63 979 247	G	Terminal block		1	1	1	1	P436110X01		A
309	R61 Y04 241		Fuse	ATM8	2	2	2	2	S423005H01		
310	R61 Y06 293		Noise filter	92110	1	1	1	1	P419153X02		
311	R61 Y01 131		Fixing plate		1	1	1	1	W880134H01		

PUHN-200,250YEM-A(-BS,-BF)
PUHN-200,250YEMK-A

CONTROL BOX PARTS

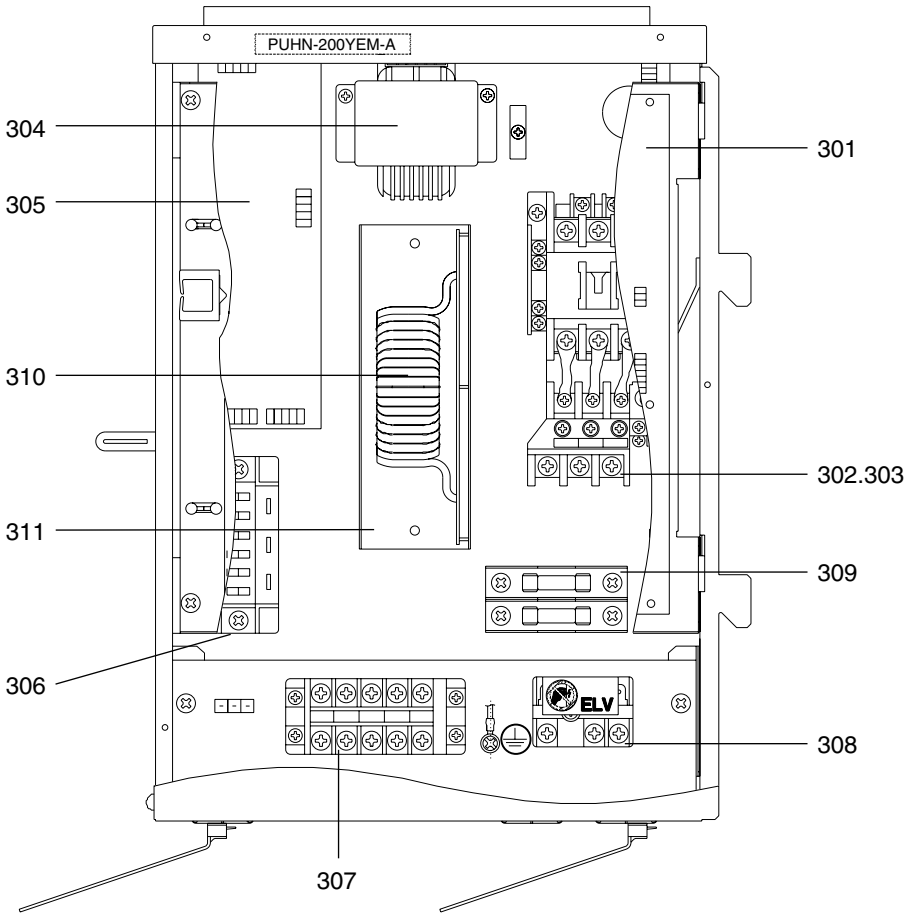

No.	Part No.	RoHS Compliant : G	Part Name	Spec.	-200YEM-A-BF	-250YEM-A-BF	-200YEMK-A	-250YEMK-A	Dwg. No.	Price	Revision History
301	R61 Y58 280		Controller board		1	1	1	1	W266236G02		
302	R61 Y32 225		Magnetic starter	PAK-35JT-F	1		1		S427025H83		A
303	R61 Y36 225		Magnetic starter	PAK-35JT-F		1		1	S427025H84		A
304	R61 Y18 260		Transformer	230V/21.7V	1	1	1	1	P715326X01		
305	R61 Y47 280		FANCON board		1	1	1	1	W629556G01		
306	R61 Y07 320		SCRM	PFB15AA120	1	1	1	1	S414032H01		
307	R63 Y02 246	G	Terminal block	LVD	1	1	1	1	P436135X01		A
308	R63 979 247	G	Terminal block		1	1	1	1	P436110X01		A
309	R61 Y04 241		Fuse	ATM8	2	2	2	2	S423005H01		
310	R61 Y06 293		Noise filter	92110	1	1	1	1	P419153X02		
311	R61 Y01 131		Fixing plate		1	1	1	1	W880134H01		

MITSUBISHI ELECTRIC CORPORATION
HEAD OFFICE: MITSUBISHI DENKI BLDG., 2-2-3, MARUNOUCHI, CHIYODA-KU, TOKYO 100-8310, JAPAN

BWE0326A (20060228)