Changes for the Better

SERVICE PARTS LIST FOR MITSUBISHI ELECTRIC PACKAGED AIR-CONDITIONERS

Series : PEAD-RP•GA#1.UK

Sept. 2008

BWE08150

INDEX
PEAD-RP60GA#1.UK PEAD-RP71GA#1.UK PEAD-RP100GA#1.UK

MITSUBISHI ELECTRIC

PEAD-RP60GA#1
PEAD-RP71GA#1
PEAD-RP100GA#1

EXTERNAL PARTS

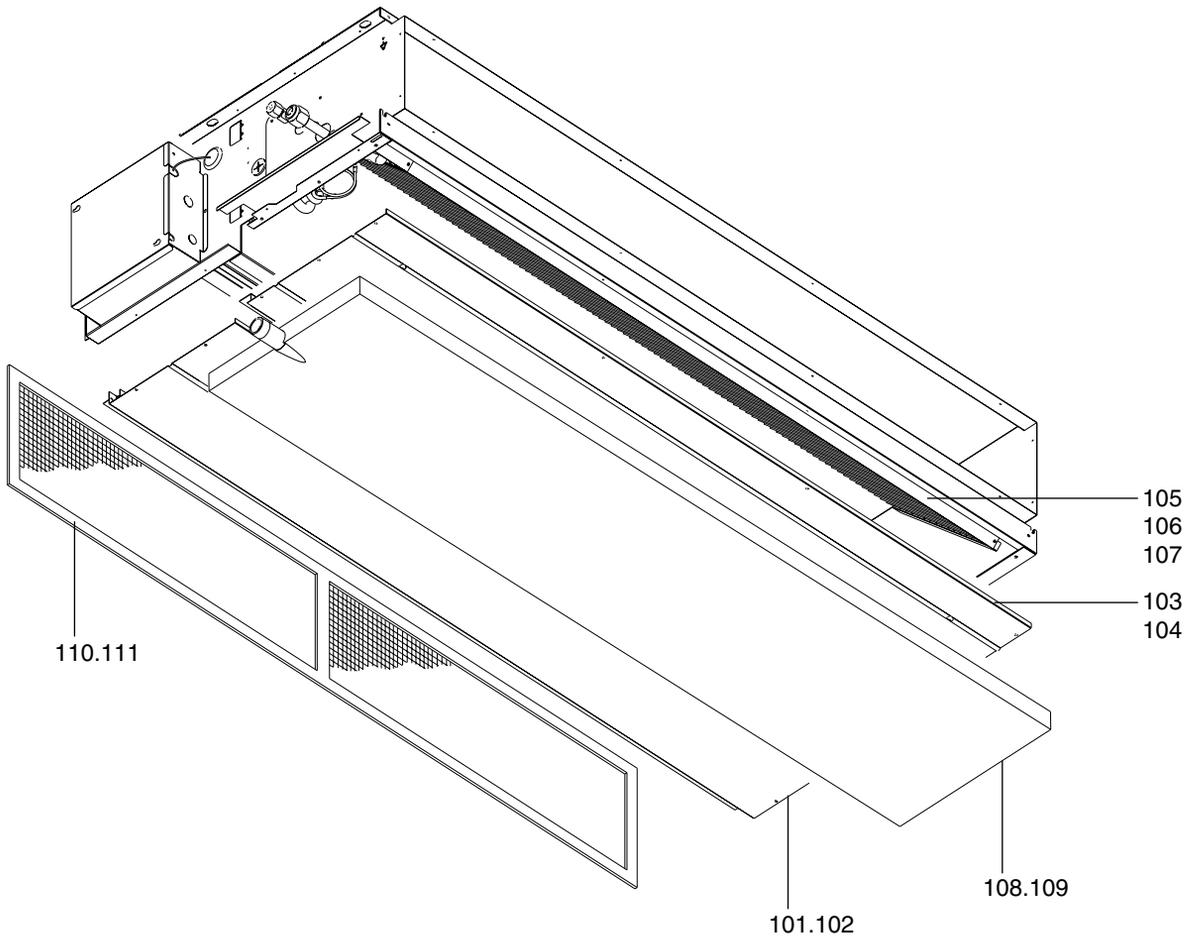

No.	Part No.	G : RoHS Apply Only W : RoHS Apply by Running Change	Part Name	Spec.	PEAD-RP60GA#1	PEAD-RP71GA#1	PEAD-RP100GA#1				Dwg. No.	Price	Revision History
101	S70 071 669G	G	Bottom plate 2		1	1					W652372Z05		
102	S70 072 669G	G	Bottom plate 2				1				W652372Z07		
103	S70 061 669G	G	Bottom plate 1 assy		1	1					W902770G03		
104	S70 062 669G	G	Bottom plate 1 assy				1				W902770G04		
105	S70 K01 480G	G	Heat exchanger assy		1						W274422G06		
106	S70 K02 480G	G	Heat exchanger assy			1					W274422G04		
107	S70 K03 480G	G	Heat exchanger assy				1				W274422G05		
108	S70 061 529G	G	Drain pan assy		1	1					W906341G01		
109	S70 071 529G	G	Drain pan assy				1				W906341G02		
110	S70 061 500G	G	Filter		1	1					W652374G04		
111	S70 071 500G	G	Filter				1				W652374G03		

PEAD-RP60GA#1
PEAD-RP71GA#1
PEAD-RP100GA#1

BLOWER PARTS

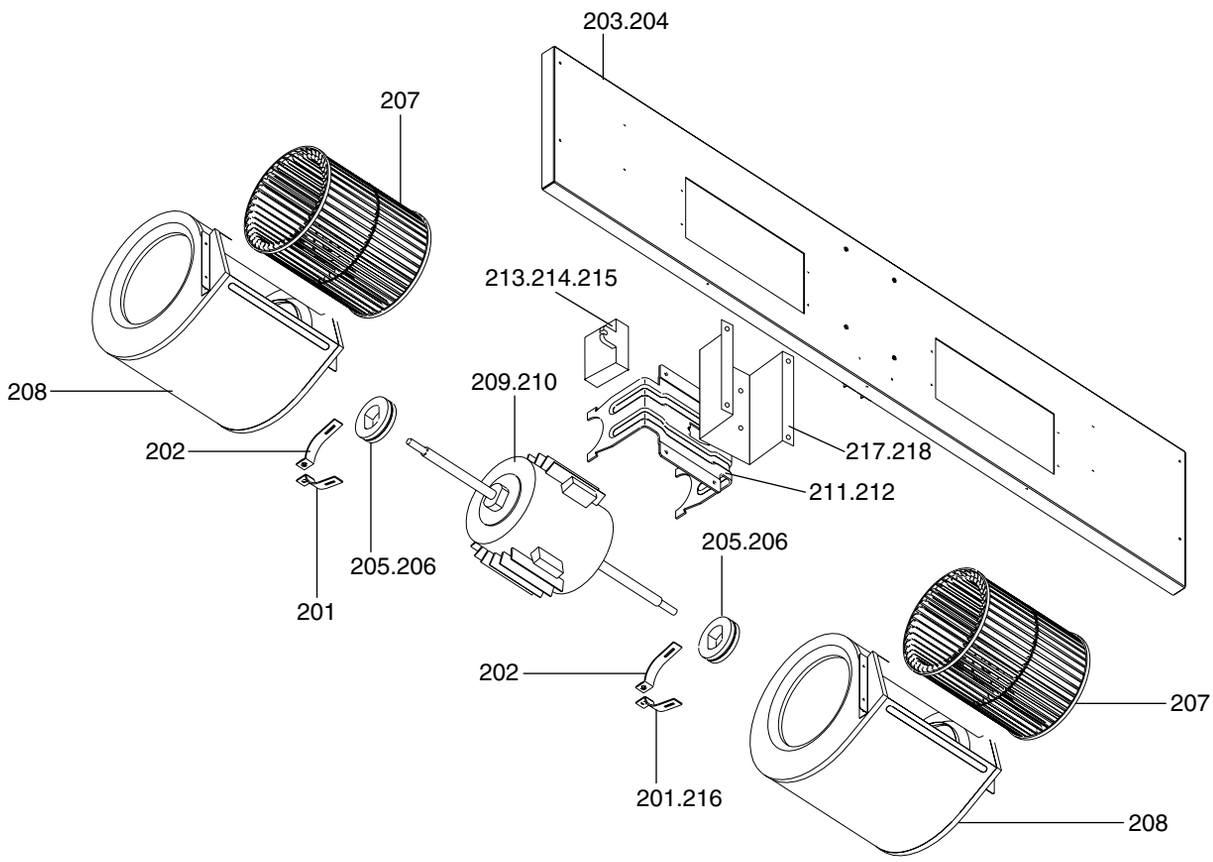

No.	Part No.	G : RoHS Apply Only W : RoHS Apply by Running Change	Part Name	Spec.	PEAD-RP60GA#1	PEAD-RP71GA#1	PEAD-RP100GA#1				Dwg. No.	Price	Revision History
201	S70 507 131	G	Piece				2				R302F328H09		
202	S70 507 132	G	Piece	with a nut			2				R302F328G84		
203	S70 610 677G	G	Fan base assy		1	1					W902772G07		
204	S70 710 677G	G	Fan base assy				1				W902772G08		
205	S70 768 105	G	Bush		2	2					W491760H02		
206	S70 755 105	G	Bush (Rubber mount)				2				R331F676H01		
207	S70 Y05 114	G	Sirocco fan		2	2	2				W126471G01		
208	S70 980 110G	G	Housing assy		2	2	2				W903428G02		
209	S70 Y02 220	G	Motor		1	1					P714913X01		
210	S70 Y03 220	G	Motor				1				P714914X01		
211	S70 652 130	G	Motor support		1	1					W241060H03		
212	S70 883 130	G	Motor support				1				R302G131H07		
213	S70 510 255	G	Capacitor 6		1						P412291X01		
214	S70 610 255	G	Capacitor 8			1					P412292X01		
215	S70 710 255	G	Capacitor 4				1				P412209X01		
216	S70 652 131	G	Attachment		2	2					W353715H01		
217	S70 090 130G	G	Motor base		1	1					W634069Z02		
218	S70 031 130G	G	Motor base				1				W902771Z03		

PEAD-RP60GA#1
PEAD-RP71GA#1
PEAD-RP100GA#1

CONTROL BOX PARTS

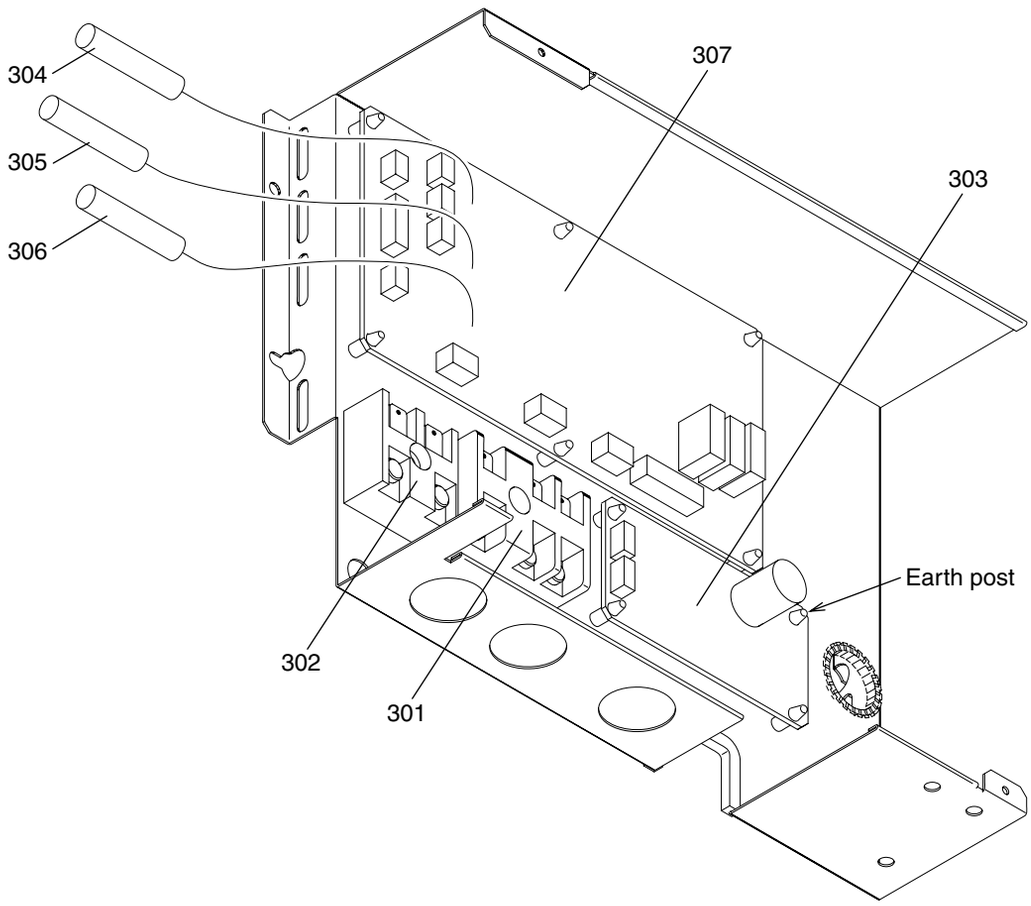

No.	Part No.	G : RoHS Apply Only W : RoHS Apply by Running Change	Part Name	Spec.	PEAD-RP60GA#1	PEAD-RP71GA#1	PEAD-RP100GA#1				Dwg. No.	Price	Revision History
301	S70 979 717	G	Terminal bed	<TB4>	1	1	1				P436110X01		
302	S70 435 717	G	Terminal bed	<TB5>	1	1	1				BA73S950H02		
303	S70 K06 313	G	Power board	PWB	1	1	1				RG00B435F12		
304	S70 KW3 202	G	Thermistor	<TH1>RED	1	1	1				RG71B018H02		
305	S70 KW2 202	G	Thermistor	<TH2>WHITE	1	1	1				RG71J486H12		
306	S70 KW1 202	G	Thermistor	<TH5>BLACK	1	1	1				RG71J488H12		
307	S70 K70 310	G	Controller board	I.B	1	1	1				RG00N579B44		

PEAD-RP60GA#1
PEAD-RP71GA#1
PEAD-RP100GA#1

ELECTRICAL PARTS

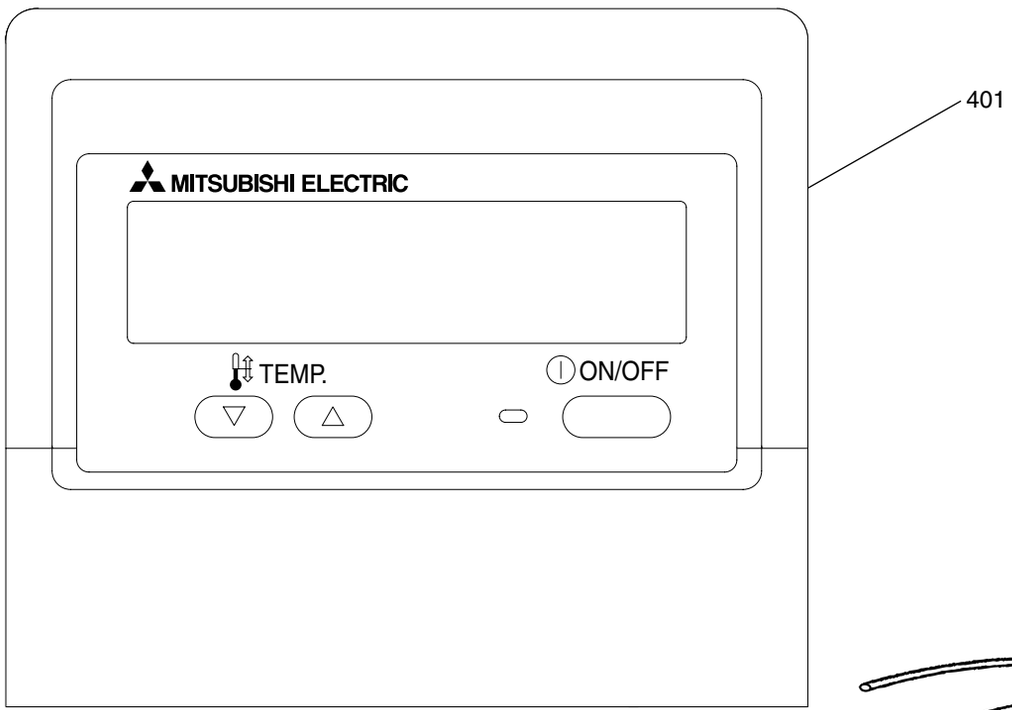

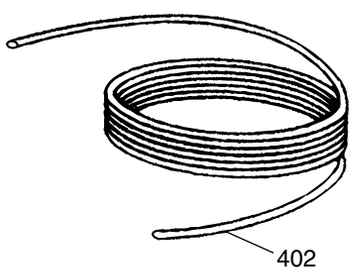

No.	Part No.	G : RoHS Apply Only W : RoHS Apply by Running Change	Part Name	Spec.	PEAD-RP60GA#1	PEAD-RP71GA#1	PEAD-RP100GA#1				Dwg. No.	Price	Revision History
401	S70 KW1 713	G	Remote controller	MA Remo-con	1	1	1				P972122X02		
402	S70 030 305	G	Remote controller cable	10m	1	1	1				BG78H445G02		

MITSUBISHI ELECTRIC CORPORATION
HEAD OFFICE: TOKYO BLDG., 2-7-3, MARUNOUCHI, CHIYODA-KU, TOKYO 100-8310, JAPAN

BWE08150 (20080930)