MITSUBISHI ELECTRIC

SPLIT-TYPE AIR CONDITIONERS

Revision C:
- MXZ-3E54VA- [ER1], MXZ-3E68VA- [ER1], MXZ-4E72VA- [ER1], MXZ-4E83VA- [E2], [ET2], [ER1], MXZ-5E102VA- [E2], [ET2], [ER1], MXZ-2E53VAHZ- [ER1] and MXZ-4E83VAHZ- [ER1] have been added.

Please void OBB723 REVISED EDITION-B.

OUTDOOR UNIT

No. OBB723
REVISED EDITION-C

PARTS CATALOG

Models

MXZ-3E54VA - [E1], [ET1], [ER1]
MXZ-3E68VA - [E1], [ET1], [ER1]
MXZ-4E72VA - [E1], [ET1], [ER1]
MXZ-4E83VA - [E1], [E2], [ET1], [ET2], [ER1]
MXZ-5E102VA - [E1], [E2], [ET1], [ET2], [ER1]
MXZ-2E53VAHZ - [E1], [ER1]
MXZ-4E83VAHZ - [E1], [ER1]

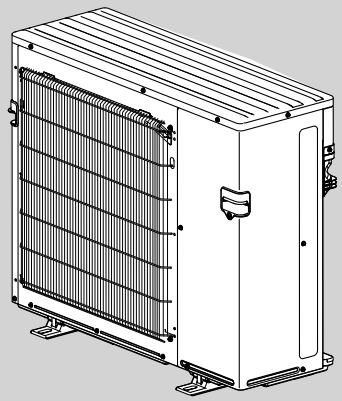

MXZ-4E83VA
MXZ-5E102VA
MXZ-2E53VAHZ

CONTENTS

1. RoHS PARTS LIST ····· 2
2. OPTIONAL PARTS ····· 18

SERVICE MANUAL (OBH723)

NOTE:
RoHS compliant products have <G> mark on the spec name plate.

Revision A:
• MXZ-2E53VAHZ- E1 and MXZ-4E83VAHZ- E1 have been added.

Revision B:
• MXZ-3E54VA- E1, ET1, MXZ-3E68VA- E1, ET1, and MXZ-4E72VA- E1, ET1 have been added.

Revision C:
• MXZ-3E54VA- ER1, MXZ-3E68VA- ER1, MXZ-4E72VA- ER1, MXZ-4E83VA- E2, ET2, ER1, MXZ-5E102VA- E2, ET2, ER1, MXZ-2E53VAHZ- ER1 and MXZ-4E83VAHZ- ER1 have been added.

1 RoHS PARTS LIST

MXZ-3E54VA MXZ-3E68VA MXZ-4E72VA
1-1. OUTDOOR UNIT STRUCTURAL PARTS AND FUNCTIONAL PARTS

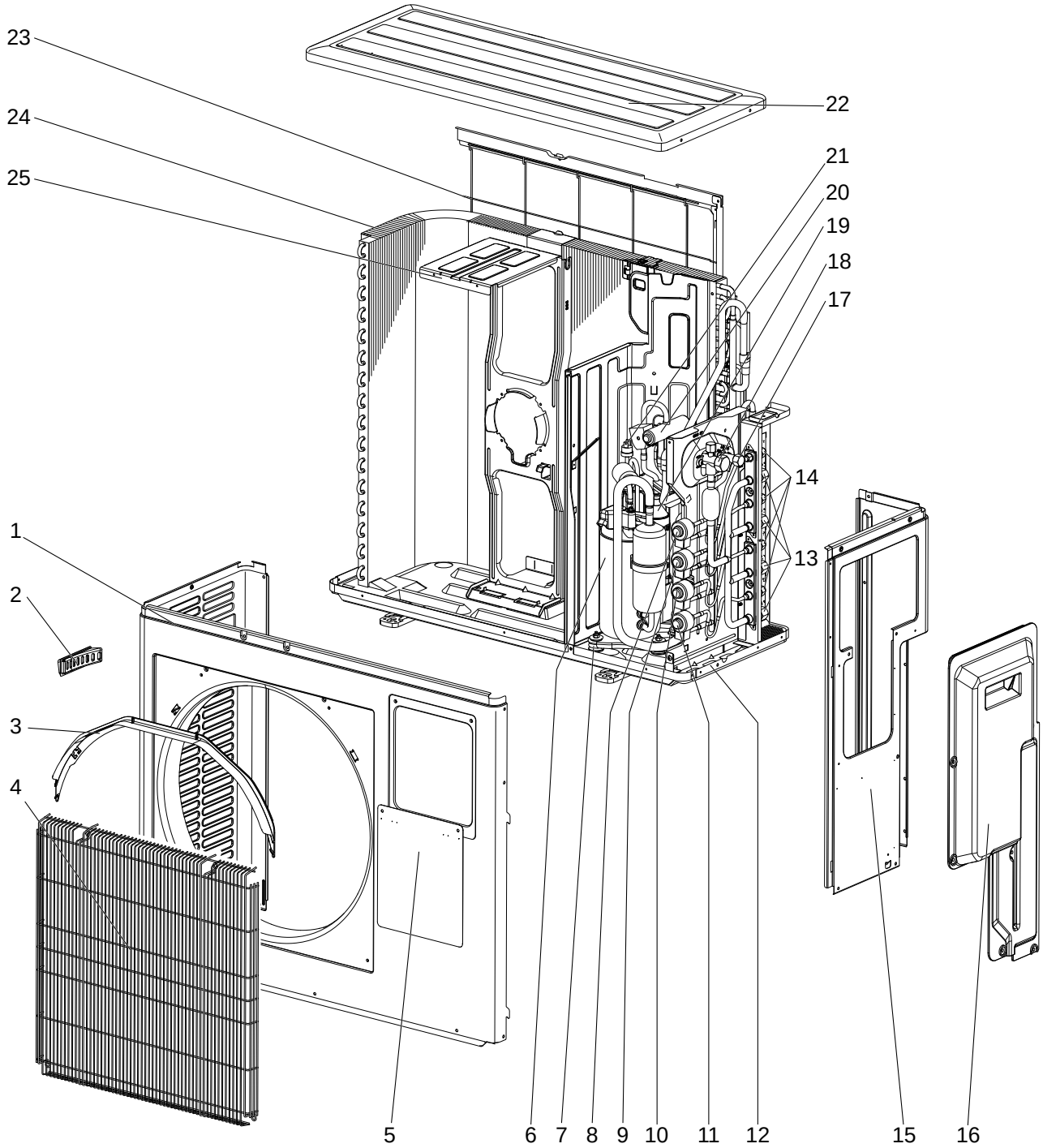

RoHS PARTS LIST (RoHS compliant)

MXZ-3E54VA MXZ-3E68VA MXZ-4E72VA
1-1. OUTDOOR UNIT STRUCTURAL PARTS AND FUNCTIONAL PARTS

Part numbers that are circled are not shown in the illustration.

No.	RoHS	Part No.	Part Name	Symbol in Wiring Diagram	Q'ty/unit									Remarks
					MXZ-									
					3E54VA -			3E68VA -			4E72VA -			
					E1	ET1	ER1	E1	ET1	ER1	E1	ET1	ER1	
1	G	E12 T07 232	CABINET		1	1	1	1	1	1	1	1	1	
2	G	E12 817 009	HANDLE		1	1	1	1	1	1	1	1	1	
3	G	E12 J69 531	ICE GUARD		1	1	1	1	1	1	1	1	1	
4	G	E12 R24 521	GRILLE		1	1	1	1	1	1	1	1	1	
5	G	E12 T07 246	SUB PANEL		1	1	1	1	1	1	1	1	1	
6	G	E12 F22 900	COMPRESSOR	MC				1	1	1	1	1	1	SNB172FEGH1T
	G	E12 F10 900	COMPRESSOR	MC	1	1	1							SNB130FGBH1T
7	G	E12 C34 506	COMPRESSOR RUBBER SET		3	3	3	3	3	3	3	3	3	3 RUBBERS SET
8	G	E12 851 640	EXPANSION VALVE								1	1	1	D room
	G	E12 R54 493	LEV COIL	LEV D							1	1	1	D room
9	G	E12 851 640	EXPANSION VALVE		1	1	1	1	1	1	1	1	1	C room
	G	E12 R53 493	LEV COIL	LEV C	1	1	1	1	1	1	1	1	1	C room
10	G	E12 851 640	EXPANSION VALVE		1	1	1	1	1	1	1	1	1	B room
	G	E12 R52 493	LEV COIL	LEV B	1	1	1	1	1	1	1	1	1	B room
11	G	E12 851 640	EXPANSION VALVE		1	1	1	1	1	1	1	1	1	A room
	G	E12 R51 493	LEV COIL	LEV A	1	1	1	1	1	1	1	1	1	A room
12	G	E12 T07 290	BASE		1	1	1	1	1	1	1	1	1	
13	G	E12 D36 666	UNION (GAS)		3	3	3	3	3	3	3	3	3	Ø9.52
	G	E12 D37 666	UNION (GAS)								1	1	1	Ø12.7
14	G	E12 D36 667	UNION (LIQUID)		3	3	3	3	3	3	4	4	4	Ø6.35
15	G	E12 R51 233	BACK PANEL		1	1	1	1	1	1				
	G	E12 R52 233	BACK PANEL								1	1	1	
16	G	E12 R51 245	SERVICE PANEL		1	1	1	1	1	1	1	1	1	
17	G	E12 D36 662	STOP VALVE (LIQUID) 3/8		1	1	1	1	1	1	1	1	1	Ø9.52
18	G	E12 D36 661	STOP VALVE (GAS) 5/8		1	1	1	1	1	1	1	1	1	Ø15.88
19	G	E12 J69 299	OIL SEPARATOR		1	1	1	1	1	1	1	1	1	
20	G	E12 C18 961	4-WAY VALVE		1	1	1	1	1	1	1	1	1	
21	G	E12 R24 646	HIGH PRESSURE SWITCH	HPS	1	1	1	1	1	1	1	1	1	
22	G	E12 819 297	TOP PANEL		1	1	1	1	1	1	1	1	1	
23	G	E12 J69 523	REAR GUARD		1	1	1	1	1	1	1	1	1	
24	G	E12 T07 630	OUTDOOR HEAT EXCHANGER		1	1	1	1	1	1	1	1	1	
25	G	E12 J69 515	MOTOR SUPPORT		1	1	1	1	1	1	1	1	1	
㉖	G	E12 938 937	CAPILLARY TUBE		8	8	8	8	8	8	8	8	8	Ø3.6 × Ø2.4 × 500
㉗	G	E12 939 936	CAPILLARY TUBE		3	3	3	3	3	3	4	4	4	Ø4.0 × Ø2.8 × 100
㉘	G	E12 938 936	CAPILLARY TUBE		1	1	1	1	1	1	1	1	1	Ø2.5 × Ø0.6 × 1000
㉙	G	E12 C18 959	POWER RECEIVER		1	1	1	1	1	1	1	1	1	
㉚	G	E12 853 640	EXPANSION VALVE		1	1	1	1	1	1	1	1	1	
	G	E12 T07 493	LEV COIL	LEV R	1	1	1	1	1	1	1	1	1	R

RoHS PARTS LIST (RoHS compliant)

MXZ-3E54VA MXZ-3E68VA MXZ-4E72VA

1-2. OUTDOOR UNIT FUNCTIONAL PARTS AND ELECTRICAL PARTS

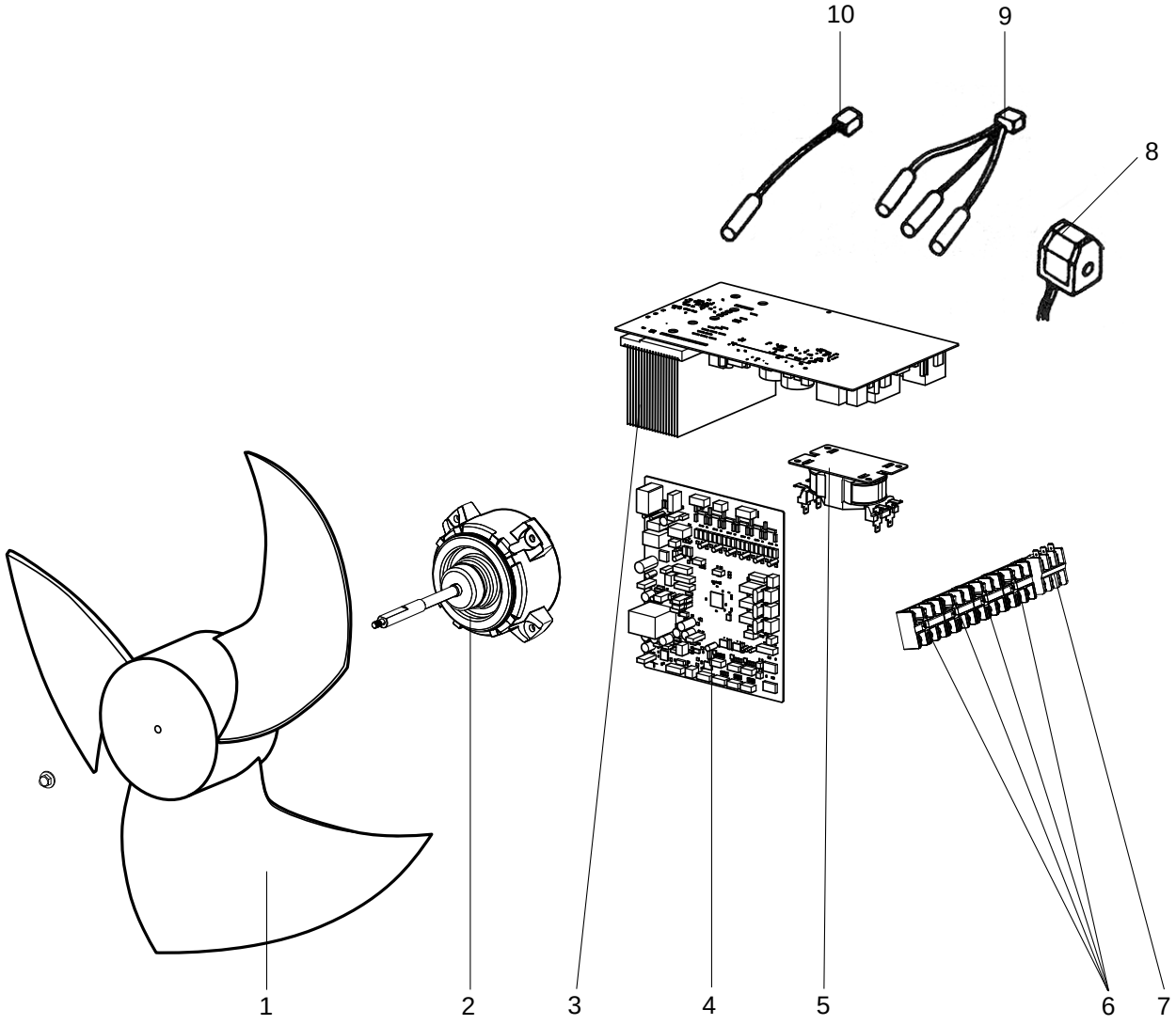

1-3. ACCESSORY

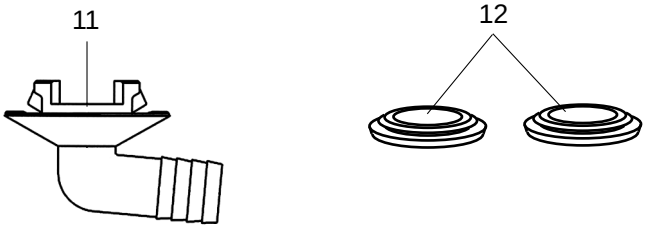

RoHS PARTS LIST (RoHS compliant)

MXZ-3E54VA MXZ-3E68VA MXZ-4E72VA
1-2. OUTDOOR UNIT FUNCTIONAL PARTS AND ELECTRICAL PARTS

No.	RoHS	Part No.	Part Name	Symbol in Wiring Diagram	Q'ty/unit									Remarks
					MXZ-									
					3E54VA -			3E68VA -			4E72VA -			
					E1	ET1	ER1	E1	ET1	ER1	E1	ET1	ER1	
1	G	E12 851 501	PROPELLER FAN		1	1	1	1	1	1	1	1	1	
2	G	E12 R51 301	OUTDOOR FAN MOTOR	MF	1	1	1	1	1	1	1	1	1	SIC-71FW-F764-2
3	G	E12 T10 440	OUTDOOR POWER P.C. BOARD		1	1	1							Including heat sink and RT64
	G	E12 T07 440	OUTDOOR POWER P.C. BOARD					1	1	1	1	1	1	
4	G	E12 T07 450	OUTDOOR CONTROL P.C. BOARD		1	1	1							
	G	E12 T08 450	OUTDOOR CONTROL P.C. BOARD					1	1	1				
	G	E12 T09 450	OUTDOOR CONTROL P.C. BOARD								1	1	1	
5	G	E12 R51 337	REACTOR	L	1	1	1	1	1	1	1	1	1	20A 600μH
6	G	E12 C92 375	TERMINAL BLOCK	TB2~5	3	3	3	3	3	3	4	4	4	Indoor unit connecting
7	G	E12 G07 374	TERMINAL BLOCK	TB1	1	1	1	1	1	1	1	1	1	Power supply
8	G	E12 T07 490	R.V. COIL	21S4	1	1	1	1	1	1	1	1	1	
9	G	E12 T07 308	THERMISTOR SET	RT61,62,68	1	1	1	1	1	1	1	1	1	DEFROST, DISCHARGE, OUTDOOR HEAT EXCHANGER
10	G	E12 T07 309	AMBIENT TEMPERATURE THERMISTOR	RT65	1	1	1	1	1	1	1	1	1	

1-3. ACCESSORY

No.	RoHS	Part No.	Part Name	Symbol in Wiring Diagram	Q'ty/unit									Remarks
					MXZ-									
					3E54VA -			3E68VA -			4E72VA -			
					E1	ET1	ER1	E1	ET1	ER1	E1	ET1	ER1	
11	G	E12 817 704	DRAIN SOCKET		1	1	1	1	1	1	1	1	1	
12	G	E12 444 705	DRAIN CAP		2	2	2	2	2	2	2	2	2	

RoHS PARTS LIST (RoHS compliant)

MXZ-4E83VA MXZ-5E102VA

1-4. OUTDOOR UNIT STRUCTURAL PARTS AND FUNCTIONAL PARTS

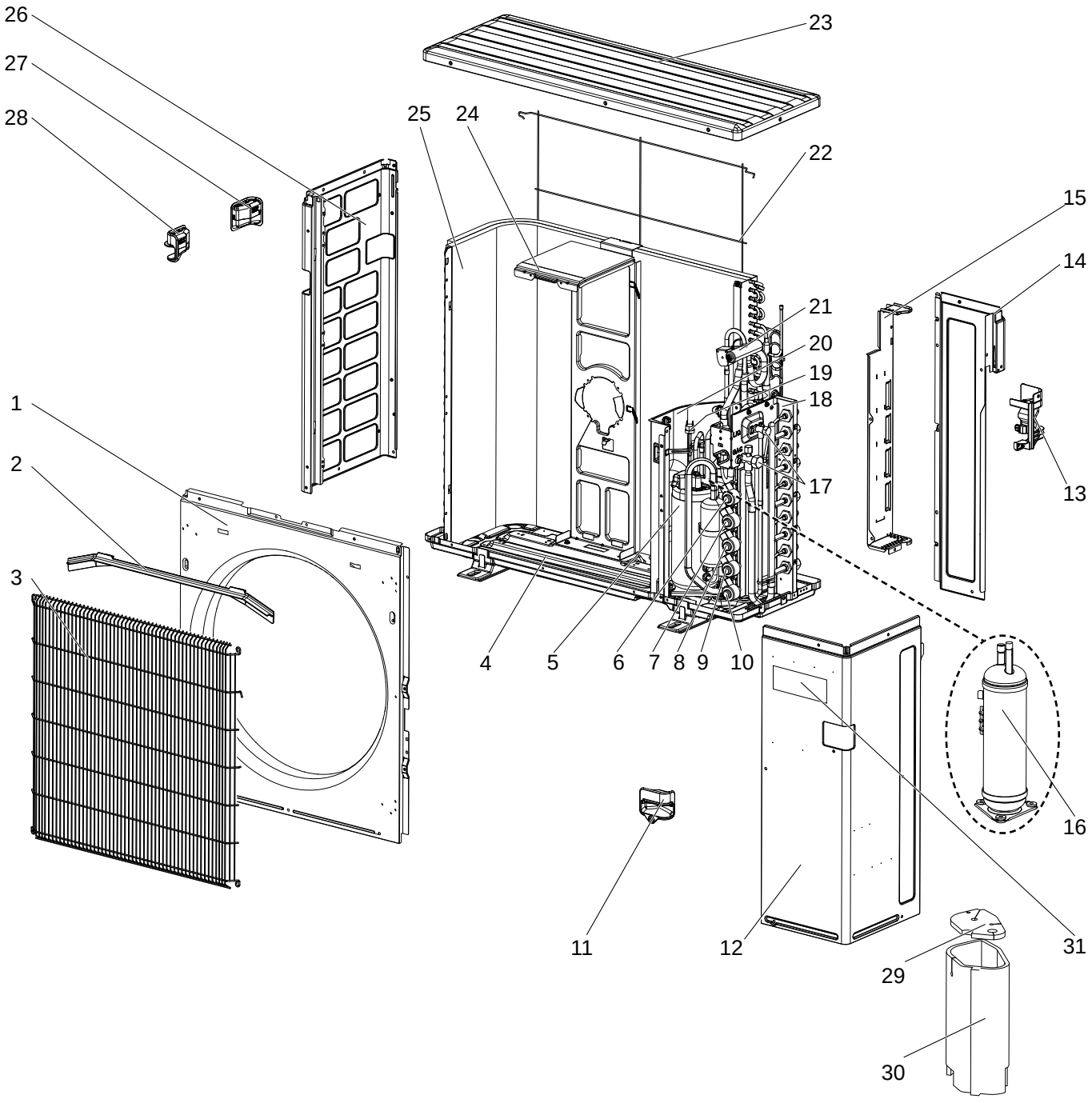

RoHS PARTS LIST (RoHS compliant)

MXZ-4E83VA MXZ-5E102VA
1-4. OUTDOOR UNIT STRUCTURAL PARTS AND FUNCTIONAL PARTS

Part number that is circled is not shown in the illustration.

No.	RoHS	Part No.	Part Name	Symbol in Wiring Diagram	Q'ty/unit MXZ- 4E83VA- E1	E2	ET1	ET2	ER1	5E102VA- E1	E2	ET1	ET2	ER1	Remarks
1	G	T7W E23 668	FRONT PANEL		1		1		1	1		1		1	
	G	T7W E22 668	FRONT PANEL			1		1			1		1		
2	G	R01 E02 631	ICE GUARD		1	1	1	1	1	1	1	1	1	1	
3	G	T7W E09 691	WIRE GRILLE		1	1	1	1	1	1	1	1	1	1	
4	G	T7W E24 686	BASE ASSEMBLY		1		1		1	1		1		1	
	G	T7W E25 686	BASE ASSEMBLY			1		1			1		1		
5	G	T97 420 607	COMPRESSOR	MC	1	1	1	1	1	1	1	1	1	1	SNB220FAGMC, Including RUBBER MOUNTS
6	G	T7W E60 401	EXPANSION VALVE ASSEMBLY							1	1	1	1	1	E room, Including UNION AND CAPILLARY TUBE
	G	T7W E82 242	LEV COIL	LEV E						1	1	1	1	1	E room, Connector: BLACK
7	G	T7W E59 401	EXPANSION VALVE ASSEMBLY		1	1	1	1	1	1	1	1	1	1	D room, Including UNION AND CAPILLARY TUBE
	G	T7W E81 242	LEV COIL	LEV D	1	1	1	1	1	1	1	1	1	1	D room, Connector: YELLOW
8	G	T7W E58 401	EXPANSION VALVE ASSEMBLY		1	1	1	1	1	1	1	1	1	1	C room, Including UNION AND CAPILLARY TUBE
	G	T7W E80 242	LEV COIL	LEV C	1	1	1	1	1	1	1	1	1	1	C room Connector: BLUE
9	G	T7W E57 401	EXPANSION VALVE ASSEMBLY		1	1	1	1	1	1	1	1	1	1	B room, Including UNION AND CAPILLARY TUBE
	G	T7W E79 242	LEV COIL	LEV B	1	1	1	1	1	1	1	1	1	1	B room, Connector: RED
10	G	T7W E56 401	EXPANSION VALVE ASSEMBLY		1	1	1	1	1	1	1	1	1	1	A room, Including UNION AND CAPILLARY TUBE
	G	T7W E78 242	LEV COIL	LEV A	1	1	1	1	1	1	1	1	1	1	A room, Connector: WHITE
11	G	T7W A02 655	HANDLE (R FRONT)		1	1	1	1	1	1	1	1	1	1	
12	G	T7W E23 667	SERVICE PANEL		1	1	1	1	1	1	1	1	1	1	
13	G	T7W A04 655	HANDLE (R REAR)		1	1	1	1	1	1	1	1	1	1	
14	G	T7W E11 682	REAR PANEL		1	1	1	1	1	1	1	1	1	1	
15	G	T7W E39 661	BACK PILLAR		1	1	1	1	1	1	1	1	1	1	
16	G	T7W E27 440	ACCUMULATOR		1	1	1	1	1	1	1	1	1	1	
17	G	T7W E07 410	STOP VALVE ASSEMBLY		1	1	1	1	1	1	1	1	1	1	Including both VALVES
18	G	–	UNION BED		1	1	1	1	1						DWG. No. WQ02A059G14
	G	–	UNION BED							1	1	1	1	1	DWG. No. WQ02A059G12
19	G	T7W E01 208	HIGH PRESSURE SWITCH	HPS	1	1	1	1	1	1	1	1	1	1	4.41 MPa
20	G	–	SEPARATOR		1	1	1	1	1	1	1	1	1	1	DWG. No. WQ00C142G02
21	G	T7W E06 403	4-WAY VALVE		1	1	1	1	1	1	1	1	1	1	
22	G	T7W E06 698	REAR GUARD		1	1	1	1	1	1	1	1	1	1	
23	G	T7W E14 641	TOP PANEL		1	1	1	1	1	1	1	1	1	1	
24	G	T7W E17 130	MOTOR SUPPORT		1	1	1	1	1	1	1	1	1	1	
25	G	T7W E75 408	OUTDOOR HEAT EXCHANGER		1	1	1	1	1	1	1	1	1	1	Including CAPILLARY TUBES AND DISTRIBUTOR
26	G	T7W E11 662	SIDE PANEL (L)		1	1	1	1	1	1	1	1	1	1	
27	G	T7W A01 655	HANDLE (REAR)		1	1	1	1	1	1	1	1	1	1	
28	G	T7W A00 655	HANDLE (FRONT)		1	1	1	1	1	1	1	1	1	1	
29	G	T7W A01 602	COMPRESSOR FELT (TOP)		1	1	1	1	1	1	1	1	1	1	
30	G	T7W A00 602	COMPRESSOR FELT (BODY)		1	1	1	1	1	1	1	1	1	1	
31	G	T7W A01 005	BRAND LABEL		1	1	1	1	1	1	1	1	1	1	
㉜	G	T7W A00 508	DAMPER SET		1	1	1	1	1						2 PCS SET 95 x 250 T2 (mm)
	G	T7W A01 508	DAMPER SET							1	1	1	1	1	2 PCS SET 95 x 320 T2 (mm)

RoHS PARTS LIST (RoHS compliant)

MXZ-4E83VA MXZ-5E102VA

1-5. OUTDOOR UNIT FUNCTIONAL PARTS AND ELECTRICAL PARTS

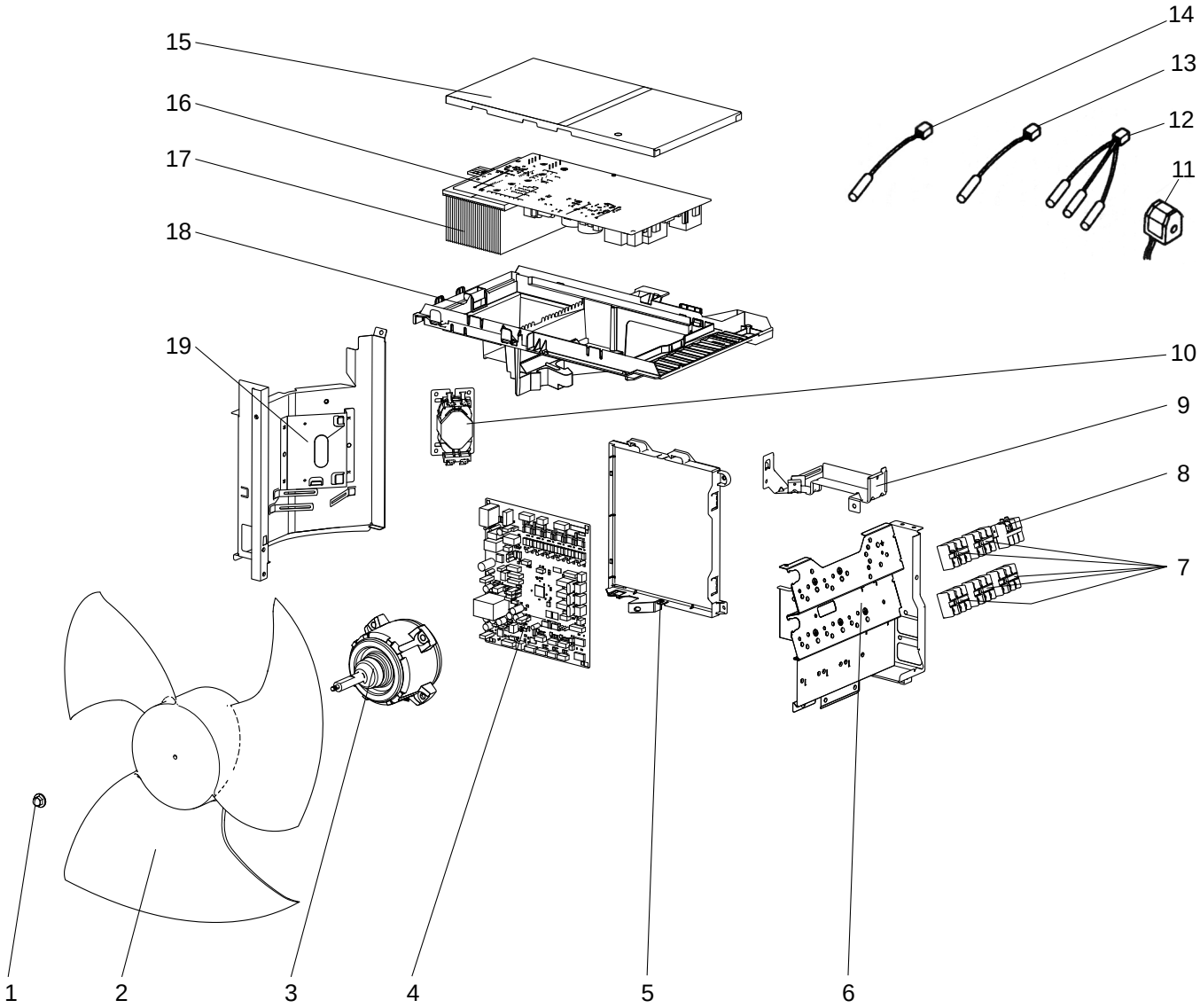

RoHS PARTS LIST (RoHS compliant)

MXZ-4E83VA MXZ-5E102VA
1-5. OUTDOOR UNIT FUNCTIONAL PARTS AND ELECTRICAL PARTS

Part number that is circled is not shown in the illustration.

No.	RoHS	Part No.	Part Name	Symbol in Wiring Diagram	Q'ty/unit										Remarks
					MXZ-										
					4E83VA-					5E102VA-					
					E1	E2	ET1	ET2	ER1	E1	E2	ET1	ET2	ER1	
1	G	R01 E09 097	PROPELLER FAN NUT		1	1	1	1	1	1	1	1	1	1	
2	G	T7W A00 115	PROPELLER FAN		1	1	1	1	1	1	1	1	1	1	
3	G	T7W A02 221	OUTDOOR FAN MOTOR	MF	1		1			1		1			
	G	T7W A04 221	OUTDOOR FAN MOTOR	MF		1		1	1		1		1	1	
4	G	T7W GP0 315	OUTDOOR CONTROL P.C. BOARD		1		1								
	G	T7W H10 315	OUTDOOR CONTROL P.C. BOARD			1		1	1						
	G	T7W GR0 315	OUTDOOR CONTROL P.C. BOARD							1		1			
	G	T7W H20 315	OUTDOOR CONTROL P.C. BOARD								1		1	1	
5	G	T7W A01 327	CB HOLDER		1	1	1	1	1	1	1	1	1	1	
6	G	–	ELECTRICAL PARTS BOX RIGHT		1	1	1	1	1	1	1	1	1	1	DWG. No. WM00B522G08
7	G	T7W E13 716	TERMINAL BLOCK	TB2,3, 4,5,(6)	4	4	4	4	4	5	5	5	5	5	INDOOR UNIT CONNECTING 3P (S1, S2, S3)
8	G	T7W E65 716	TERMINAL BLOCK	TB1	1	1	1	1	1	1	1	1	1	1	POWER SUPPLY 3P (L, N, ⏚)
9	G	–	UNDER FRAME		1	1	1	1	1	1	1	1	1	1	DWG. No. WM00C604G01
10	G	T7W E25 259	REACTOR	L	1	1	1	1	1	1	1	1	1	1	
11	G	T7W E83 242	R.V. COIL	21S4	1	1	1	1	1	1	1	1	1	1	
12	G	T7W E71 202	THERMISTOR	RT61,62, 68	1	1	1	1	1	1	1	1	1	1	DEFROST, DISCHARGE, OUTDOOR HEAT EXCHANGER
13	G	T7W E72 202	THERMISTOR	RT65	1	1	1	1	1	1	1	1	1	1	AMBIENT
14	G	R01 E99 202	THERMISTOR	RT64	1	1	1	1	1	1	1	1	1	1	FIN (HEAT SINK)
15	G	T7W A00 325	PB COVER		1	1	1	1	1	1	1	1	1	1	
16	G	T7W AW0 323	OUTDOOR POWER P.C. BOARD		1	1	1	1	1	1	1	1	1	1	
17	G	T7W A03 371	HEAT SINK		1	1	1	1	1	1	1	1	1	1	
18	G	T7W A00 327	PB HOLDER		1	1	1	1	1	1	1	1	1	1	
19	G	–	ELECTRICAL PARTS BOX LEFT		1	1	1	1	1	1	1	1	1	1	DWG. No. WM00B521G06
⑳	G	T7W A00 510	COMPRESSOR LEAD ASSEMBLY SET		1	1	1	1	1	1	1	1	1	1	

RoHS PARTS LIST (RoHS compliant)

MXZ-2E53VAHZ

1-6. OUTDOOR UNIT STRUCTURAL PARTS AND FUNCTIONAL PARTS

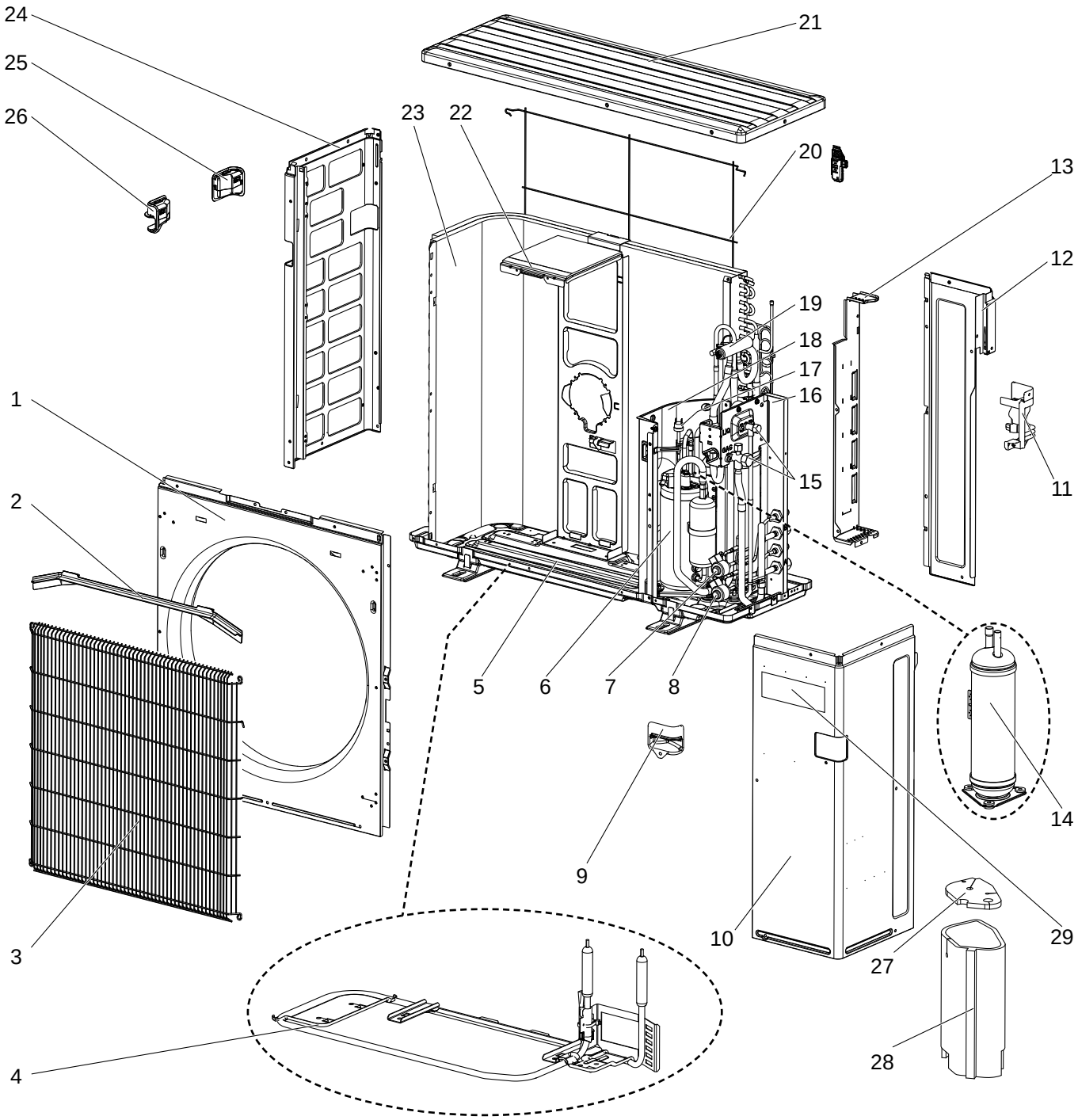

RoHS PARTS LIST (RoHS compliant)

MXZ-2E53VAHZ

1-6. OUTDOOR UNIT STRUCTURAL PARTS AND FUNCTIONAL PARTS

Part number that is circled is not shown in the illustration.

No.	RoHS	Part No.	Part Name	Symbol in Wiring Diagram	Q'ty/unit MXZ-2E53VAHZ-		Remarks
					E1	ER1	
1	G	T7W E23 668	FRONT PANEL		1	1	
2	G	R01 E02 631	ICE GUARD		1	1	
3	G	T7W E09 691	WIRE GRILLE		1	1	
4	G	T7W B01 300	DEFROST HEATER	H	1	1	Including HEATER PROTECTOR (26H)
5	G	T7W E24 686	BASE ASSEMBLY		1	1	
6	G	T97 420 607	COMPRESSOR	MC	1	1	SNB220FAGMC, Including RUBBER MOUNTS
7	G	T7W E57 401	EXPANSION VALVE ASSEMBLY		1	1	B room, Including UNION AND CAPILLARY TUBE
	G	T7W E79 242	LEV COIL	LEV B	1	1	B room, Connector: RED
8	G	T7W E56 401	EXPANSION VALVE ASSEMBLY		1	1	A room, Including UNION AND CAPILLARY TUBE
	G	T7W E78 242	LEV COIL	LEV A	1	1	A room, Connector: WHITE
9	G	T7W A02 655	HANDLE (R FRONT)		1	1	
10	G	T7W E23 667	SERVICE PANEL		1	1	
11	G	T7W A04 655	HANDLE (R REAR)		1	1	
12	G	T7W E11 682	REAR PANEL		1	1	
13	G	T7W E39 661	BACK PILLAR		1	1	
14	G	T7W E27 440	ACCUMULATOR		1	1	
15	G	T7W E07 410	STOP VALVE ASSEMBLY		1	1	Including both VALVES
16	G	–	UNION BED		1	1	DWG. No. WQ02A059G16
17	G	T7W E01 208	HIGH PRESSURE SWITCH	HPS	1	1	4.41 MPa
18	G	–	SEPARATOR		1	1	DWG. No. WQ00C142G04
19	G	T7W E06 403	4-WAY VALVE		1	1	
20	G	T7W E06 698	REAR GUARD		1	1	
21	G	T7W E14 641	TOP PANEL		1	1	
22	G	T7W E17 130	MOTOR SUPPORT		1	1	
23	G	T7W E75 408	OUTDOOR HEAT EXCHANGER		1	1	Including CAPILLARY TUBES AND DISTRIBUTOR
24	G	T7W E11 662	SIDE PANEL (L)		1	1	
25	G	T7W A01 655	HANDLE (REAR)		1	1	
26	G	T7W A00 655	HANDLE (FRONT)		1	1	
27	G	T7W A01 602	COMPRESSOR FELT (TOP)		1	1	
28	G	T7W A00 602	COMPRESSOR FELT (BODY)		1	1	
29	G	T7W A01 005	BRAND LABEL		1	1	
㉚	G	T7W A00 508	DAMPER SET		1	1	2 PCS SET 95 x 250 T2 (mm)

RoHS PARTS LIST (RoHS compliant)

MXZ-2E53VAHZ

1-7. OUTDOOR UNIT FUNCTIONAL PARTS AND ELECTRICAL PARTS

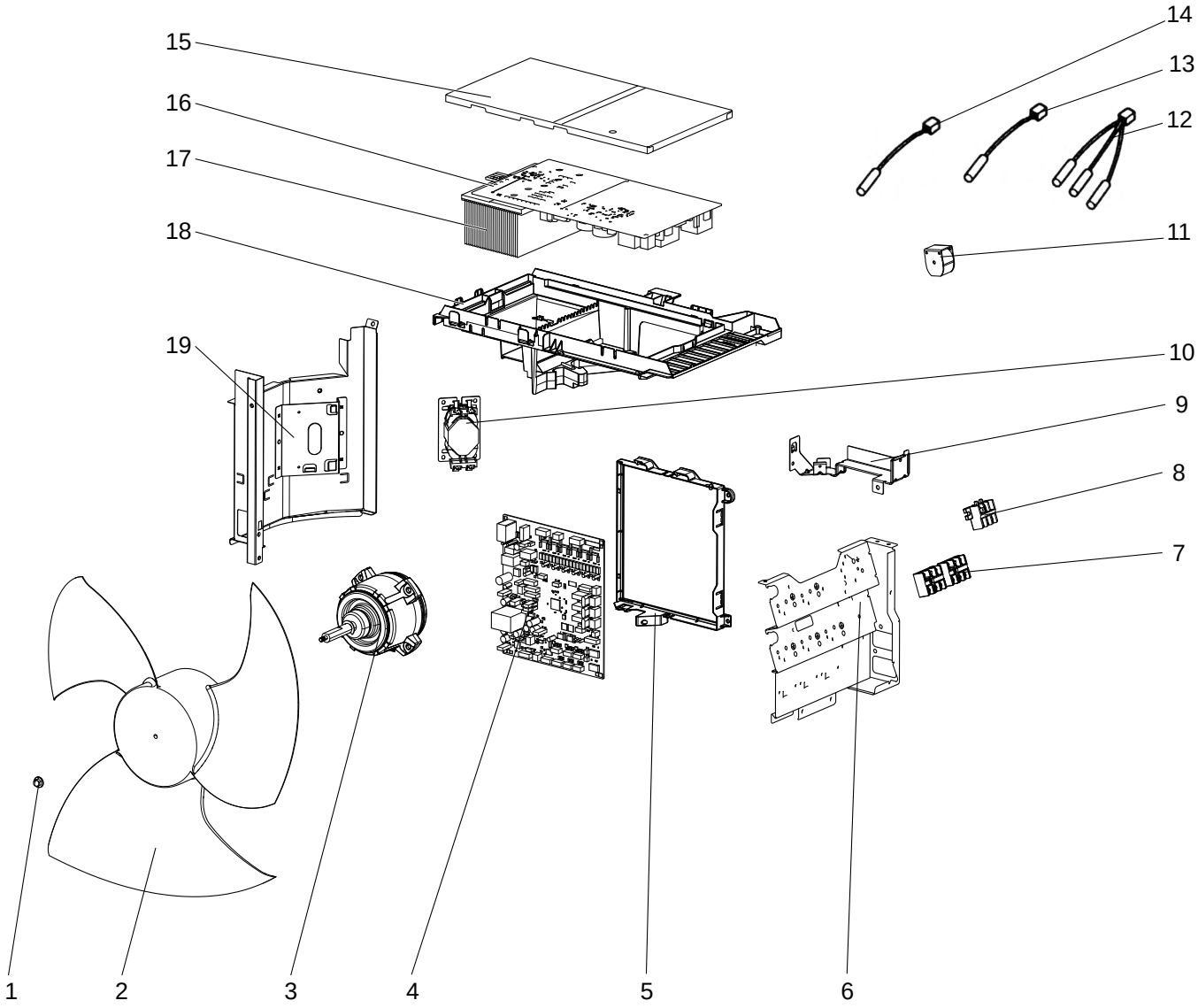

RoHS PARTS LIST (RoHS compliant)

MXZ-2E53VAHZ

1-7. OUTDOOR UNIT FUNCTIONAL PARTS AND ELECTRICAL PARTS

Part number that is circled is not shown in the illustration.

No.	RoHS	Part No.	Part Name	Symbol in Wiring Diagram	Q'ty/unit MXZ-2E53VAHZ-		Remarks
					E1	ER1	
1	G	R01 E09 097	PROPELLER FAN NUT		1	1	
2	G	T7W A00 115	PROPELLER FAN		1	1	
3	G	T7W A02 221	OUTDOOR FAN MOTOR	MF	1		
	G	T7W A04 221	OUTDOOR FAN MOTOR	MF		1	
4	G	T7W GT0 315	OUTDOOR CONTROL P.C. BOARD		1	1	
5	G	T7W A01 327	CB HOLDER		1	1	
6	G	–	ELECTRICAL PARTS BOX RIGHT		1	1	DWG. No. WM00B522G08
7	G	T7W E13 716	TERMINAL BLOCK	TB2,3	2	2	INDOOR UNIT CONNECTING 3P (S1, S2, S3)
8	G	T7W E65 716	TERMINAL BLOCK	TB1	1	1	POWER SUPPLY 3P (L, N, ⏚)
9	G	–	UNDER FRAME		1	1	DWG. No. WM00C604G01
10	G	T7W E25 259	REACTOR	L	1	1	
11	G	T7W E83 242	R.V. COIL	21S4	1	1	
12	G	T7W E71 202	THERMISTOR	RT61,62, 68	1	1	DEFROST, DISCHARGE, OUTDOOR HEAT EXCHANGER
13	G	T7W E72 202	THERMISTOR	RT65	1	1	AMBIENT
14	G	R01 E99 202	THERMISTOR	RT64	1	1	FIN (HEAT SINK)
15	G	T7W A00 325	PB COVER		1	1	
16	G	T7W AW0 323	OUTDOOR POWER P.C. BOARD		1	1	
17	G	T7W A03 371	HEAT SINK		1	1	
18	G	T7W A00 327	PB HOLDER		1	1	
19	G	–	ELECTRICAL PARTS BOX LEFT		1	1	DWG. No. WM00B521G07
⑳	G	T7W A00 510	COMPRESSOR LEAD ASSEMBLY SET		1	1	

RoHS PARTS LIST (RoHS compliant)

MXZ-4E83VAHZ

1-8. OUTDOOR UNIT STRUCTURAL PARTS AND FUNCTIONAL PARTS

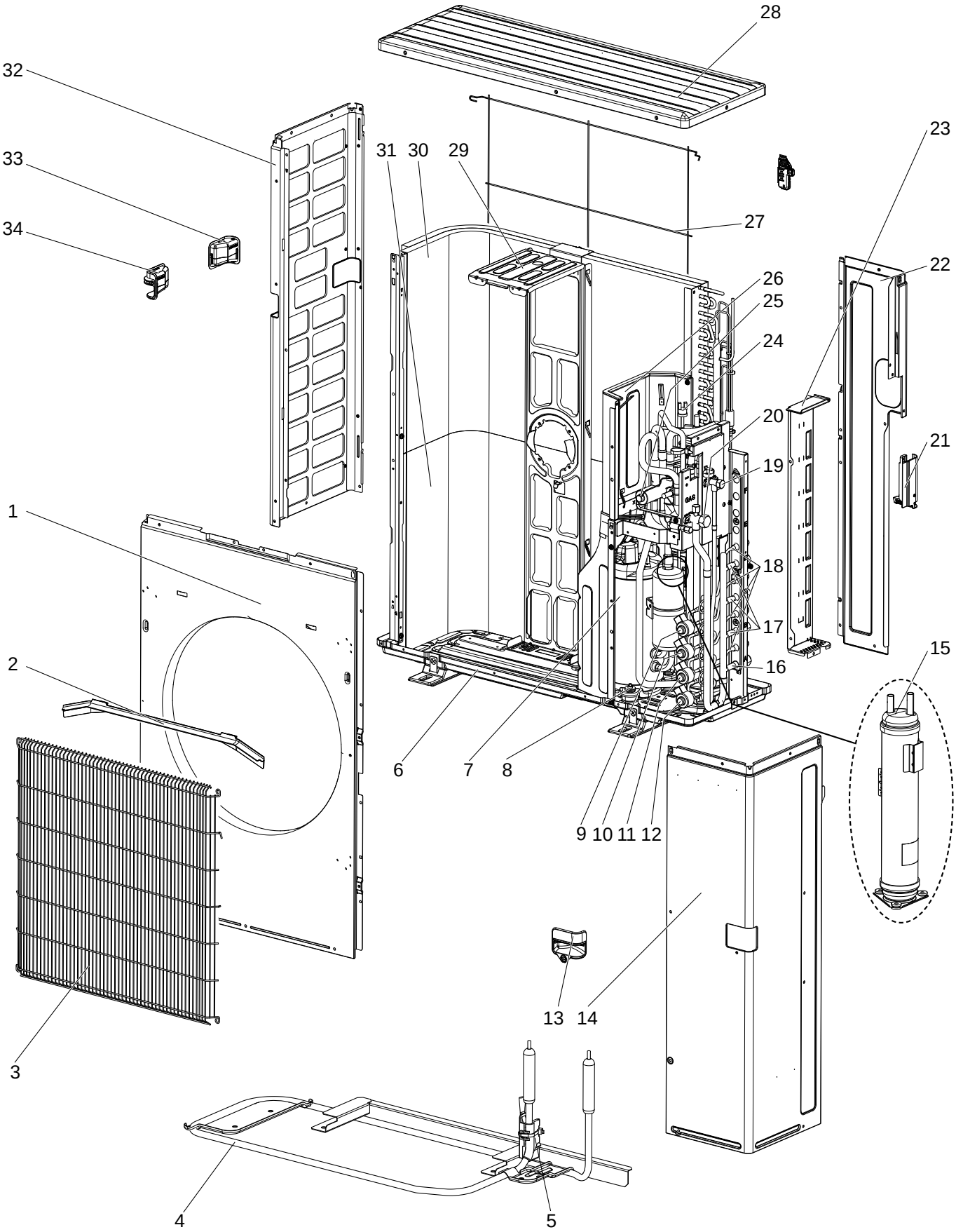

RoHS PARTS LIST (RoHS compliant)

MXZ-4E83VAHZ

1-8. OUTDOOR UNIT STRUCTURAL PARTS AND FUNCTIONAL PARTS

Part numbers that are circled are not shown in the illustration.

No.	RoHS	Part No.	Part Name	Symbol In Wiring Diagram	Q'ty/unit MXZ-4E83VAHZ		Remarks
					E1	ER1	
1	G	E12 N99 232	FRONT PANEL		1	1	
2	G	E17 A15 531	ICE GUARD		1	1	
3	G	E12 R55 521	GRILLE		1	1	
4	G	E12 N99 526	DEFROST HEATER	H	1	1	
5	G	E12 N99 381	HEATER PROTECTOR	26H	1	1	
6	G	E12 N99 290	BASE ASSEMBLY		1	1	
7	G	E12 N99 900	COMPRESSOR	MC	1	1	MNB33FBTMC-L
8	G	E12 267 506	COMPRESSOR RUBBER SET		3	3	3 RUBBERS SET
9	G	E12 N99 640	EXPANSION VALVE		1	1	D room
	G	E12 P63 493	LEV COIL	LEV D	1	1	D room
10	G	E12 N99 640	EXPANSION VALVE		1	1	C room
	G	E12 P02 493	LEV COIL	LEV C	1	1	C room
11	G	E12 N99 640	EXPANSION VALVE		1	1	B room
	G	E12 P01 493	LEV COIL	LEV B	1	1	B room
12	G	E12 N99 640	EXPANSION VALVE		1	1	A room
	G	E12 N99 493	LEV COIL	LEV A	1	1	A room
13	G	E12 P01 009	HANDLE		1	1	
14	G	E12 N99 245	SERVICE PANEL		1	1	
15	G	E12 N99 932	ACCUMULATOR		1	1	
16	G	E12 D37 666	UNION (GAS)		1	1	Ø12.7, A room
17	G	E12 D36 666	UNION (GAS)		3	3	Ø9.52, B, C, D room
18	G	E12 D36 667	UNION (LIQUID)		4	4	Ø6.35, A, B, C, D room
19	G	E12 N99 662	STOP VALVE (LIQUID)		1	1	Ø9.52
20	G	E12 R55 661	STOP VALVE (GAS)		1	1	Ø15.88
21	G	E12 N99 009	HANDLE (BACK)		1	1	
22	G	E12 R55 233	BACK PANEL		1	1	
23	G	E12 R91 814	BACK PILLAR		1	1	
24	G	E12 R24 646	HIGH PRESSURE SWITCH	HPS	1	1	4.41 MPa
25	G	E12 R55 961	4-WAY VALVE		1	1	
26	G	E12 N99 293	SEPARATOR		1	1	
27	G	E12 N99 523	REAR GUARD		1	1	
28	G	E12 N99 297	TOP PANEL		1	1	
29	G	E12 N99 515	MOTOR SUPPORT		1	1	
30	G	E12 N99 630	OUTDOOR HEAT EXCHANGER (TOP)		1	1	
31	G	E12 P01 630	OUTDOOR HEAT EXCHANGER (UNDER)		1	1	
32	G	E12 N99 086	SIDE PANEL-L		1	1	
33	G	E17 943 009	HANDLE (REAR)		1	1	
34	G	E17 942 009	HANDLE (FRONT)		1	1	
㉟	G	E12 R55 492	2-WAY SOLENOID VALVE		1	1	
㊱	G	E12 939 936	CAPILLARY TUBE		4	4	Ø4.0 x Ø2.8 x 100
㊲	G	E12 938 936	CAPILLARY TUBE		1	1	Ø2.5 x Ø0.6 x 1000
㊳	G	E12 N99 936	CAPILLARY TUBE		2	2	Ø4.0 x Ø3.0 x 200

RoHS PARTS LIST (RoHS compliant)

MXZ-4E83VAHZ

1-9. OUTDOOR UNIT FUNCTIONAL PARTS AND ELECTRICAL PARTS

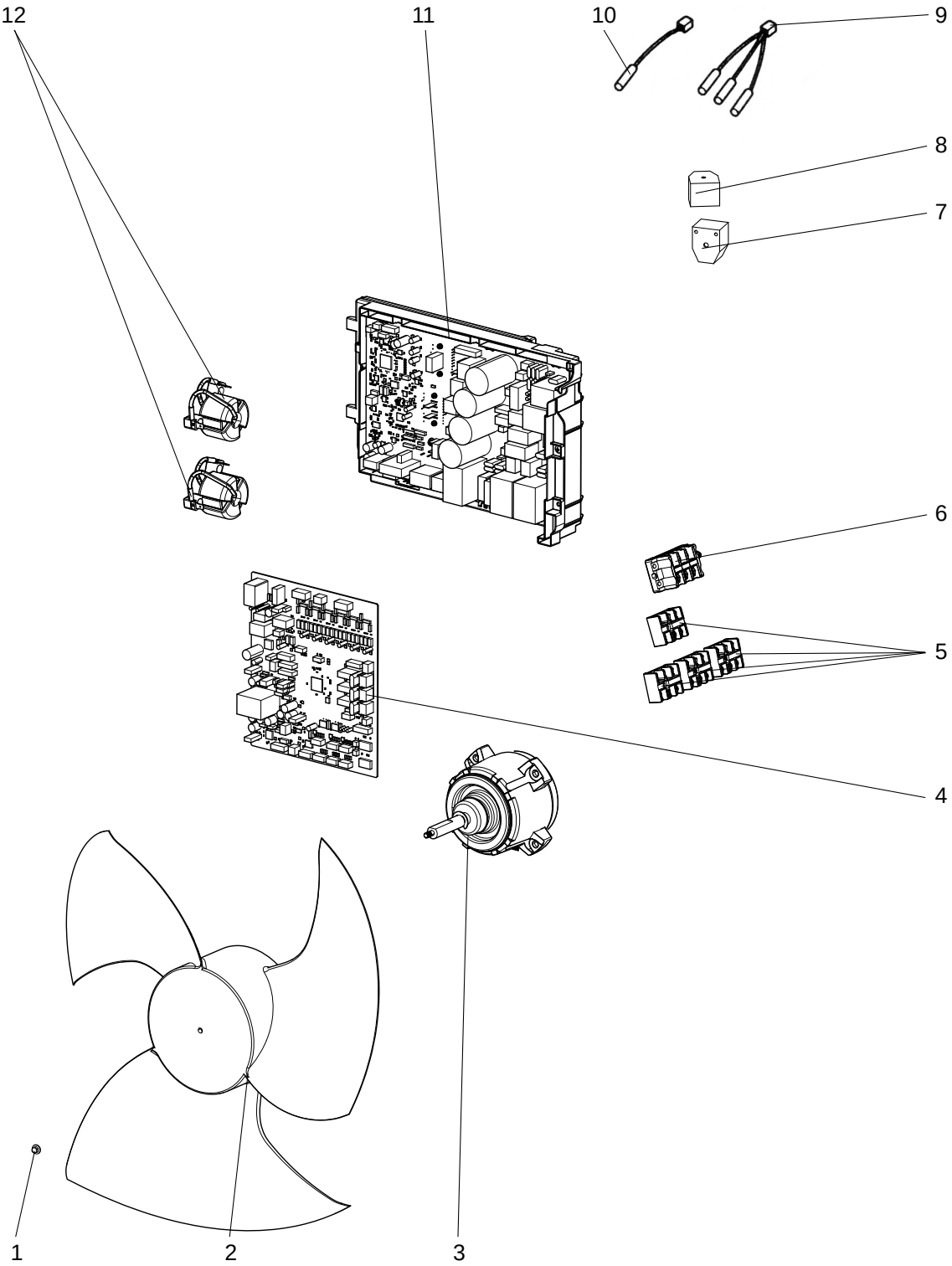

RoHS PARTS LIST (RoHS compliant)

MXZ-4E83VAHZ
1-9. OUTDOOR UNIT FUNCTIONAL PARTS AND ELECTRICAL PARTS

No.	RoHS	Part No.	Part Name	Symbol In Wiring Diagram	Q'ty/unit MXZ-4E83VAHZ		Remarks
					E1	ER1	
1	G	E17 A15 508	PROPELLER FAN NUT		1	1	
2	G	E12 N99 501	PROPELLER FAN		1	1	
3	G	E12 R55 301	OUTDOOR FAN MOTOR	MF	1	1	SIC-81FW-D888-□
4	G	E12 R91 450	OUTDOOR CONTROL P.C. BOARD		1	1	
5	G	E12 C92 375	TERMINAL BLOCK	TB2,3,4, 5	4	4	Indoor unit connecting
6	G	E12 R55 374	TERMINAL BLOCK	TB1	1	1	Power supply
7	G	E12 R55 490	R.V. COIL	21S4	1	1	
8	G	E12 R56 490	2-WAY VALVE SOLENOID COIL	21S2	1	1	
9	G	E12 N99 308	THERMISTOR SET	RT61, 62,68	1	1	DEFROST, DISCHARGE, OUTDOOR HEAT EXCHANGER
10	G	E12 N99 309	AMBIENT TEMPERATURE THERMISTOR	RT65	1	1	
11	G	E12 R55 440	OUTDOOR POWER P.C. BOARD		1	1	Including heat sink and RT64
12	G	E12 N99 337	REACTOR	L1,L2	2	2	30A 750μH

2 OPTIONAL PARTS

2-1. DIFFERENT-DIAMETER PIPE

Unit: mm(inch)

MXZ-3E54VA **MXZ-3E68VA** **MXZ-4E72VA** **MXZ-4E83VA** **MXZ-5E102VA** **MXZ-2E53VAHZ** **MXZ-4E83VAHZ**	Model name	Connected pipes diameter	Diameter A	Diameter B	Length C
For different diameter pipes	MAC-A454JP-E	ϕ9.52 (3/8) — ϕ12.7 (1/2)	ϕ9.52 (3/8)	ϕ12.7 (1/2)	69
	MAC-A455JP-E	ϕ12.7 (1/2) — ϕ9.52 (3/8)	ϕ12.7 (1/2)	ϕ9.52 (3/8)	65
	MAC-A456JP-E	ϕ12.7 (1/2) — ϕ15.88 (5/8)	ϕ12.7 (1/2)	ϕ15.88 (5/8)	66.5
	PAC-493PI	ϕ6.35 (1/4) — ϕ9.52 (3/8)	ϕ6.35 (1/4)	ϕ9.52 (3/8)	60.5
	PAC-SG76RJ-E	ϕ9.52 (3/8) — ϕ15.88 (5/8)	ϕ9.52 (3/8)	ϕ15.88 (5/8)	101.5

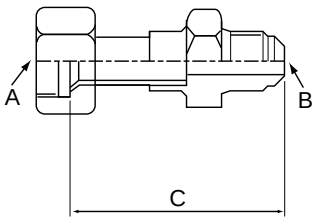

2-2. OUTLET GUIDE

Changes air discharge direction.

Unit: mm

Applied unit	Model name	Model code
MXZ-3E54VA **MXZ-3E68VA** **MXZ-4E72VA**	MAC-856SG	51H-856
MXZ-4E83VA **MXZ-5E102VA** **MXZ-2E53VAHZ** **MXZ-4E83VAHZ**	PAC-SH96SG-E	7H2N19

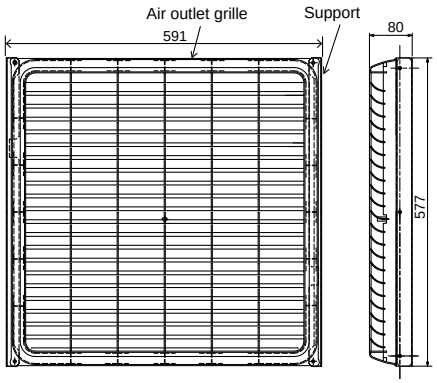

MAC-856SG

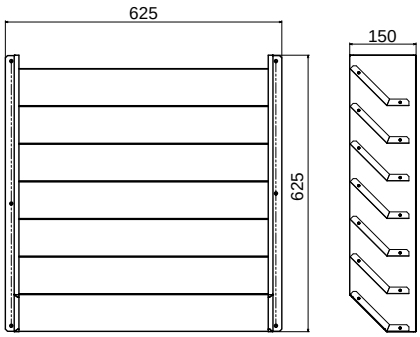

PAC-SH96SG-E

2-3. M-NET ADAPTER

Applied unit	Model name	Model code
MXZ-4E83VA **MXZ-5E102VA** **MXZ-2E53VAHZ**	PAC-IF01MNT-E	7H2N34

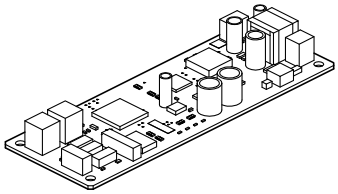

2-4. DRAIN SOCKET

Applied unit	Model name	Model code
MXZ-4E83VA **MXZ-5E102VA**	PAC-SG60DS-E	7H2N24

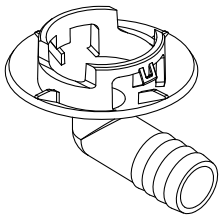

2-5. BASE HEATER

Applied unit	Model name	Model code
MXZ-4E83VA **MXZ-5E102VA**	PAC-645BH-E	7H2590

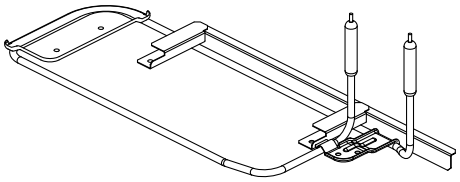

Components

①	Base heater	1	④	Base heater support (2)	1	⑦	Cable tie	2
②	Heater guard	1	⑤	Clamp	1	⑧	Fastener	2
③	Base heater support (1)	1	⑥	Screw	8	⑨	Spec label	1

MITSUBISHI ELECTRIC CORPORATION

HEAD OFFICE: TOKYO BLDG., 2-7-3, MARUNOUCHI, CHIYODA-KU, TOKYO 100-8310, JAPAN

© Copyright 2015 MITSUBISHI ELECTRIC CORPORATION
Distributed in Feb. 2016. No. OBB723 REVISED EDITION-C
Distributed in Nov. 2015. No. OBB723 REVISED EDITION-B
Distributed in Sep. 2015. No. OBB723 REVISED EDITION-A
Distributed in Apr. 2015. No. OBB723
Made in Japan

New publication, effective Feb. 2016
Specifications are subject to change without notice.