MITSUBISHI ELECTRIC

SPLIT-TYPE AIR CONDITIONERS

Changes for the Better

Revision A:
- MUZ-HJ50VA-E1 has been added.

Please void OBB648.

OUTDOOR UNIT

PARTS CATALOG

HFC utilized R410A

No. OBB648
REVISED EDITION-A

Models

MUZ-HJ25VA - E1
MUZ-HJ35VA - E1
MUZ-HJ50VA - E1

MUZ-HJ25VA
MUZ-HJ35VA

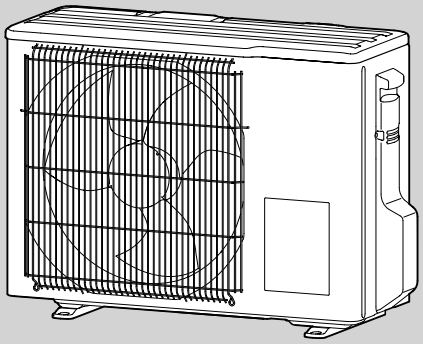

CONTENTS

1. RoHS PARTS LIST 2

SERVICE MANUAL (OBH648)

NOTE:
RoHS compliant products have <G> mark on the spec name plate.

CE

Revision A:
• MUZ-HJ50VA-E1 has been added.

1 RoHS PARTS LIST

MUZ-HJ25VA MUZ-HJ35VA

1-1. OUTDOOR UNIT STRUCTURAL PARTS AND FUNCTIONAL PARTS

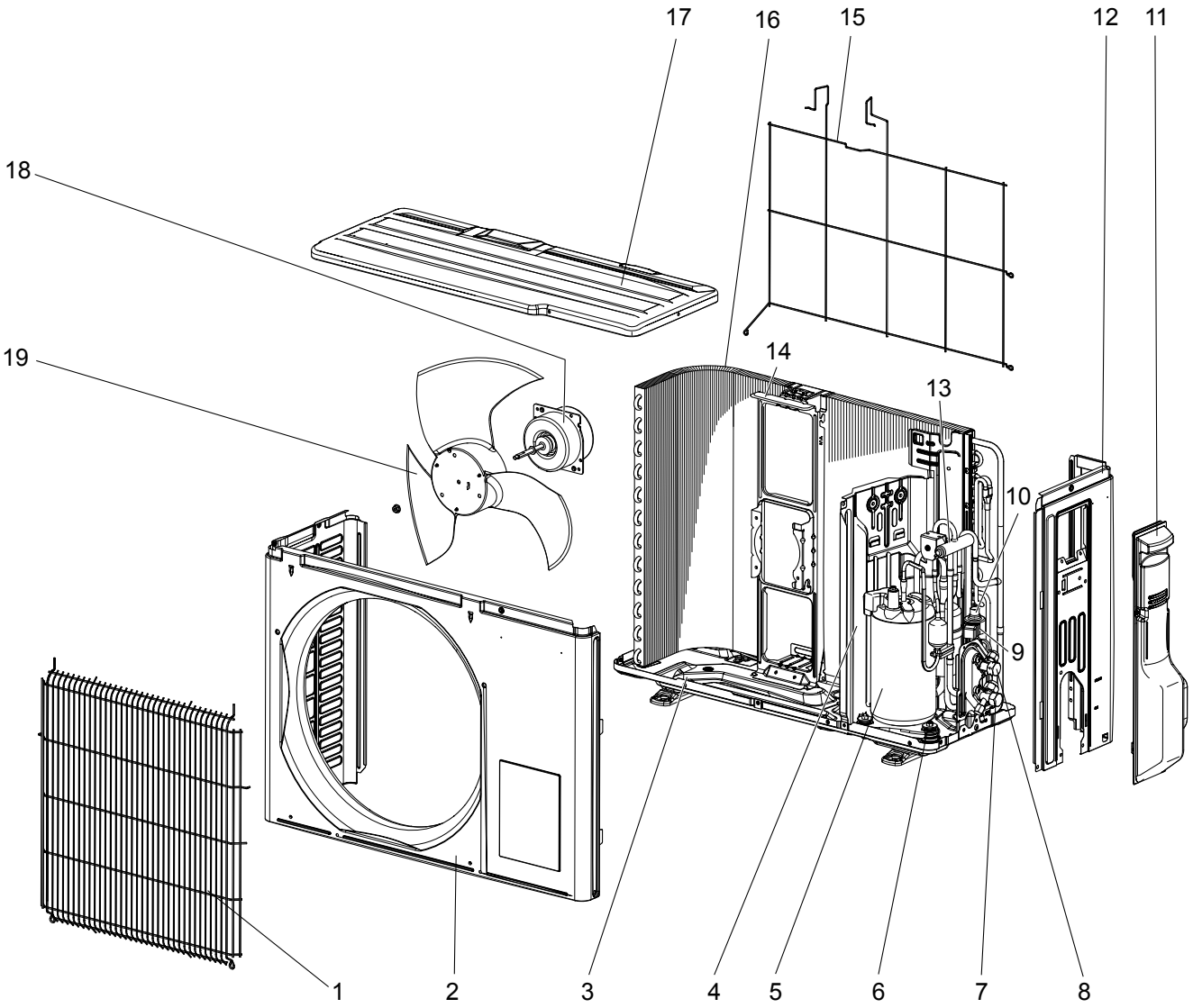

RoHS PARTS LIST

1-1. OUTDOOR UNIT STRUCTURAL PARTS AND FUNCTIONAL PARTS

Part number that is circled is not shown in the illustration.

No.	RoHS	Part No.	Part Name	Symbol in Wiring Diagram	Q'ty/unit MUZ-HJ 25VA-E1	Q'ty/unit MUZ-HJ 35VA-E1	Remarks
1	G	E12 J98 521	GRILLE		1	1	
2	G	E12 J98 232	CABINET		1	1	
3	G	E12 J98 290	BASE		1	1	
4	G	E12 J98 293	SEPARATOR		1	1	
5	G	E12 J98 900	COMPRESSOR	MC	1		KNB065FUJHC
	G	E12 J99 900				1	KNB073FUVHC
6	G	E12 C34 506	COMPRESSOR RUBBER SET		3	3	3 RUBBERS/SET
7	G	E12 J98 661	STOP VALVE (GAS)		1	1	ø9.52
8	G	E12 J98 662	STOP VALVE (LIQUID)		1	1	ø6.35
9	G	E12 J98 493	EXPANSION VALVE COIL	LEV	1		
	G	E12 J99 493				1	
10	G	E12 J98 640	EXPANSION VALVE		1		
	G	E12 J99 640				1	
11	G	E12 J98 245	SERVICE PANEL		1	1	
12	G	E12 J98 233	BACK PANEL		1	1	
13	G	E12 D65 961	4-WAY VALVE		1	1	
14	G	E12 J98 515	MOTOR SUPPORT		1	1	
15	G	E12 J98 525	CONDENSER WIRE NET		1	1	
16	G	E12 J98 630	OUTDOOR HEAT EXCHANGER		1	1	
17	G	E12 J98 297	TOP PANEL		1	1	
18	G	E12 J98 301	OUTDOOR FAN MOTOR	MF	1	1	RA6V21-□□
19	G	E12 B72 501	PROPELLER		1	1	
⑳	G	E12 J98 936	CAPILLARY TUBE		1	1	ø3.0 × ø1.4 × 260

RoHS PARTS LIST

MUZ-HJ25VA MUZ-HJ35VA

1-2. OUTDOOR UNIT ELECTRICAL PARTS

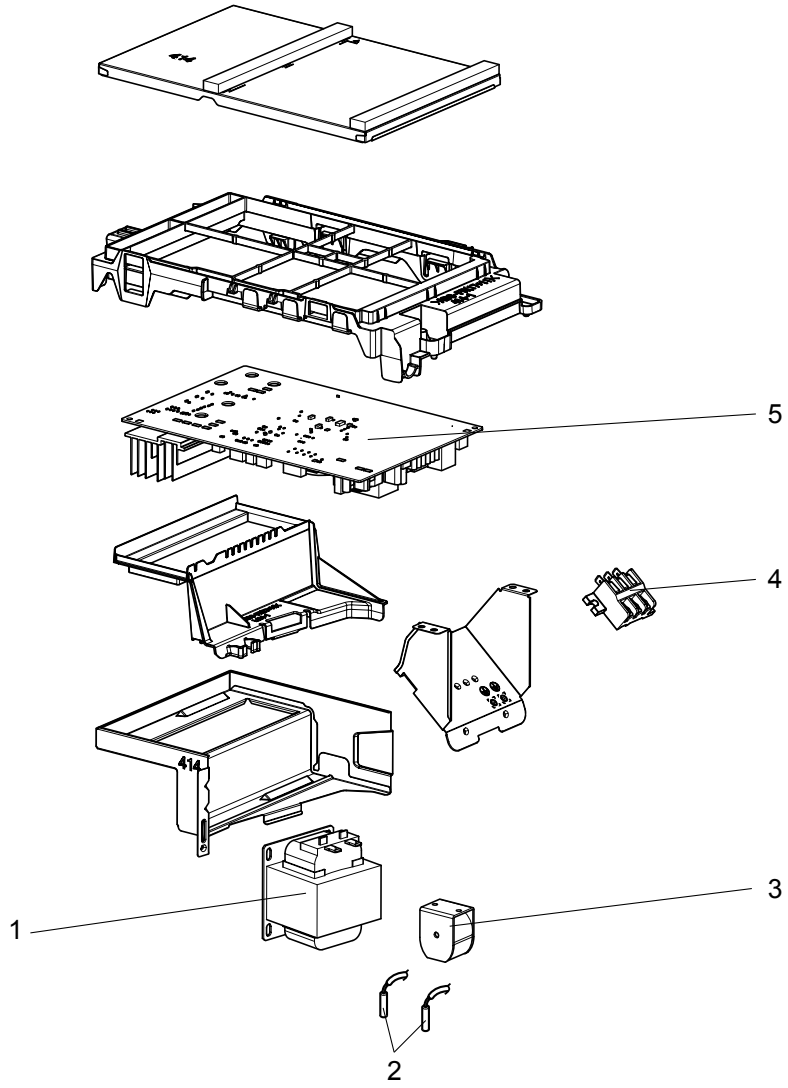

No.	RoHS	Part No.	Part Name	Symbol in Wiring Diagram	Q'ty/unit MUZ-HJ 25VA-E1	Q'ty/unit MUZ-HJ 35VA-E1	Remarks
1	G	E12 G10 337	REACTOR	L61	1	1	
2	G	E12 J98 306	THERMISTOR SET	RT61,RT62	1	1	DEFROST, DISCHARGE
3	G	E12 J98 490	R.V. COIL	21S4	1	1	
4	G	E12 927 374	TERMINAL BLOCK	TB	1	1	3 P
5	G	E12 J98 451	INVERTER P.C. BOARD		1		Including heat sink and RT64
	G	E12 J99 451				1	

RoHS PARTS LIST

MUZ-HJ25VA MUZ-HJ35VA

1-3. DRAIN SOCKET

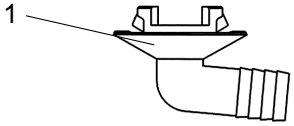

No.	RoHS	Part No.	Part Name	Symbol in Wiring Diagram	Q'ty/unit MUZ-HJ		Remarks
					25VA-E1	35VA-E1	
1	G	E12 817 704	DRAIN SOCKET		1	1	

RoHS PARTS LIST

MUZ-HJ50VA

1-4. OUTDOOR UNIT STRUCTURAL PARTS AND FUNCTIONAL PARTS

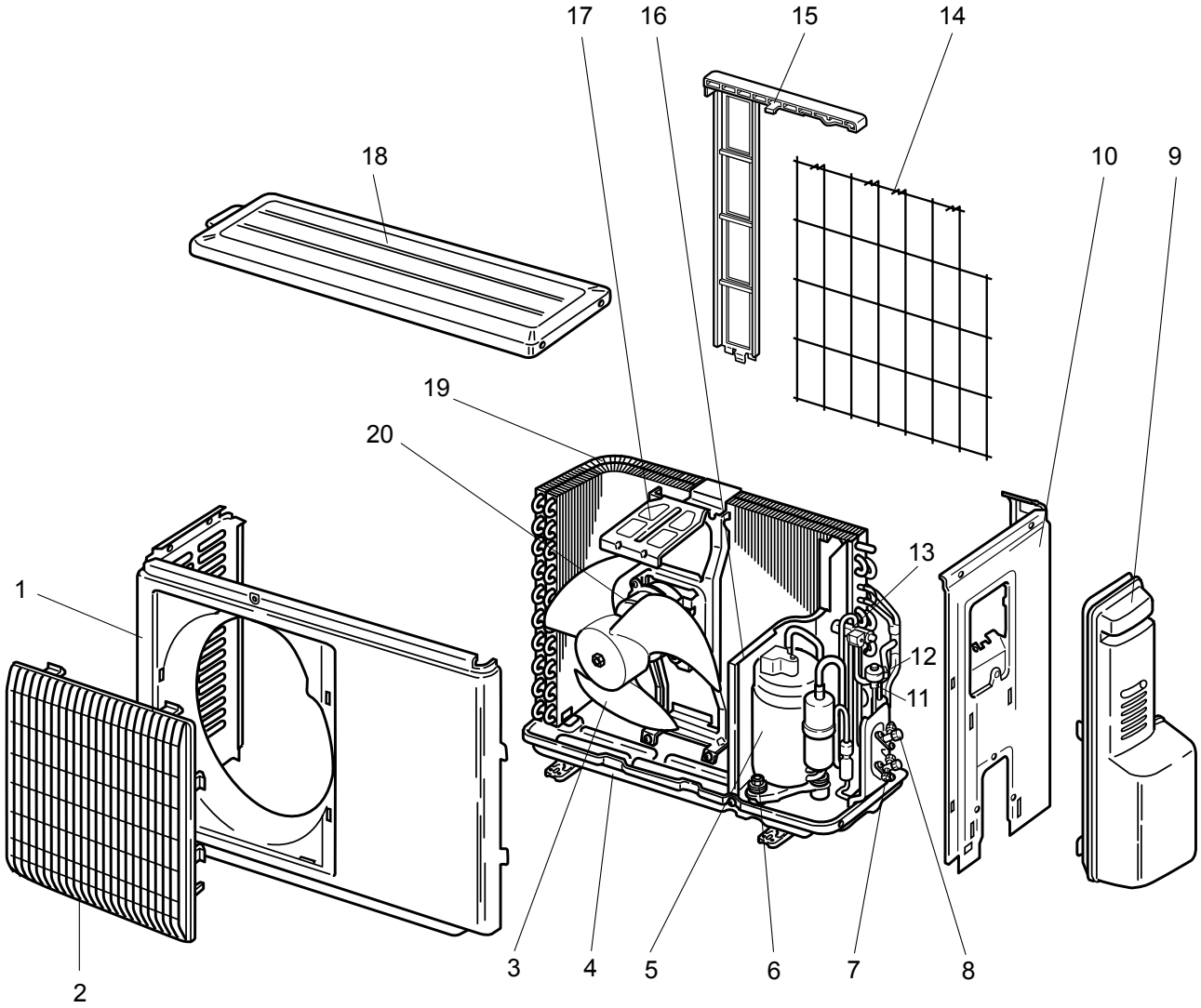

RoHS PARTS LIST

1-4. OUTDOOR UNIT STRUCTURAL PARTS AND FUNCTIONAL PARTS

Part numbers that are circled are not shown in the illustration.

No.	RoHS	Part No.	Part Name	Symbol in Wiring Diagram	Q'ty/unit	Remarks
					MUZ-HJ50VA- E1	
1	G	E12 927 232	CABINET		1	
2	G	E12 927 521	GRILLE		1	
3	G	E12 927 501	PROPELLER		1	
4	G	E12 D69 290	BASE		1	
5	G	E12 E05 900	COMPRESSOR	MC	1	SNB130FGBHT
6	G	E12 C34 506	COMPRESSOR RUBBER SET		3	3 RUBBERS/SET
7	G	E12 D58 661	STOP VALVE (GAS)		1	ø12.7
8	G	E12 D58 662	STOP VALVE (LIQUID)		1	ø6.35
9	G	E12 927 245	SERVICE PANEL		1	
10	G	E12 G15 233	BACK PANEL		1	
11	G	E12 838 640	EXPANSION VALVE		1	
12	G	E12 G10 493	EXPANSION VALVE COIL	LEV	1	
13	G	E12 J44 961	4-WAY VALVE		1	
14	G	E12 930 525	CONDENSER WIRE NET		1	
15	G	E12 930 523	CONDENSER NET		1	
16	G	E12 G11 293	SEPARATOR		1	
17	G	E12 929 515	MOTOR SUPPORT		1	
18	G	E12 927 297	TOP PANEL		1	
19	G	E12 K01 630	OUTDOOR HEAT EXCHANGER		1	
20	G	E12 G11 301	OUTDOOR FAN MOTOR	MF	1	RC0J50-□□
21	G	E12 J47 936	CAPILLARY TUBE		1	ø4.0×ø2.4×240
22	G	E12 838 704	DRAIN SOCKET		1	

RoHS PARTS LIST

MUZ-HJ50VA
1-5. OUTDOOR UNIT ELECTRICAL PARTS

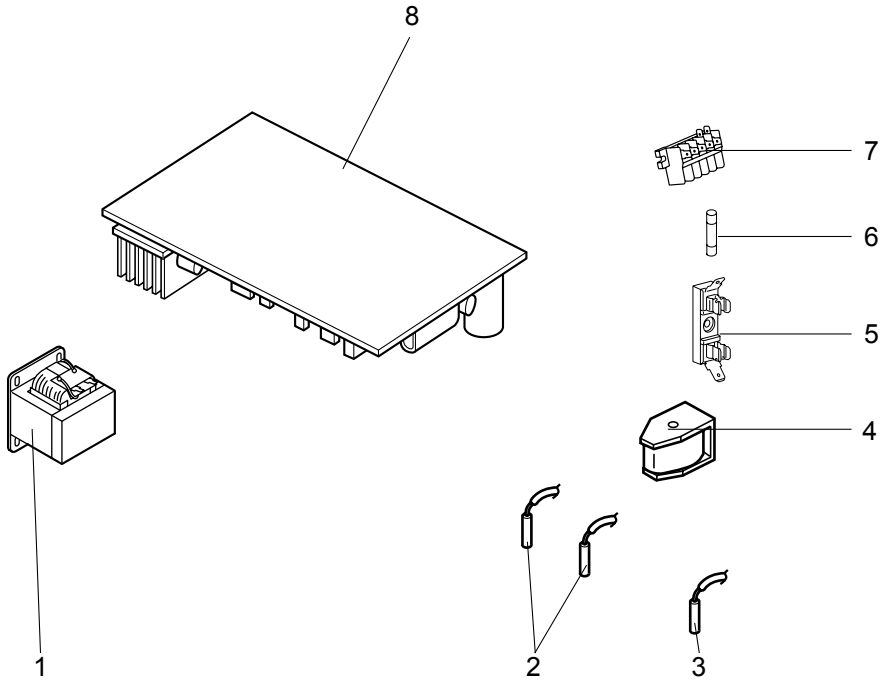

RoHS PARTS LIST

1-5. OUTDOOR UNIT ELECTRICAL PARTS

No.	RoHS	Part No.	Part Name	Symbol in Wiring Diagram	Q'ty/unit	Remarks
					MUZ-HJ50VA- E1	
1	G	E12 G11 337	REACTOR	L61	1	
2	G	E12 C34 306	THERMISTOR SET	RT61, RT62	1	DEFROST, DISCHARGE
3	G	E12 C34 307	OUTDOOR HEAT EXCHANGER TEMPERATURE THERMISTOR	RT68	1	
4	G	E12 J47 490	R.V. COIL	21S4	1	
5	G	E12 735 241	FUSE HOLDER		1	
6	G	E12 735 382	FUSE	F61	1	T20AL250V
7	G	E12 K01 374	TERMINAL BLOCK	TB	1	5 P
8	G	E12 K01 451	INVERTER P.C. BOARD		1	Including heat sink and RT64

MITSUBISHI ELECTRIC CORPORATION
HEAD OFFICE: TOKYO BLDG., 2-7-3, MARUNOUCHI, CHIYODA-KU, TOKYO 100-8310, JAPAN

© Copyright 2012 MITSUBISHI ELECTRIC CORPORATION
Distributed in Mar. 2013. No. OBB648 REVISED EDITION-A
Distributed in Dec. 2012. No. OBB648
Made in Japan

New publication, effective Mar. 2013
Specifications are subject to change without notice.