Back to Index page

Optional Parts

Model Name

●Optional Parts for indoor unit

●Optional Parts for outdoor unit

Optional Parts List <Indoor>

Option part / Indoor unit			Filter																									
			Air cleaning filter		Platinum catalyst deodrizing filter	Anti-allergy enzyme filter				Anti-allergen eletric enzyme filter	Catechin air filter		Oil mist filter element	High efficiency filter element				Fileter Box				i-see sensor corner panel	Shutter plate	Multi-functional casement	Duct flange for fresh air intake		Space panel	Quick clean kit
			MAC-1300 FT	MAC-1700 FT	MAC-307 FT-E	MAC-2300 FT	MAC-415 FT-E	MAC-408 FT-E	MAC-171 FT-E	MAC-417FT-E	MAC-3003 CF	MAC-3004 CF-E	PAC-SG38 KF-E	PAC-SH59 KF-E	PAC-SH88 KF-E	PAC-SH89 KF-E	PAC-SH90 KF-E	PAC-KE92 TB-E	PAC-KE93 TB-E	PAC-KE94 TB-E	PAC-KE95 TB-E	PAC-SA1 ME-E	PAC-SH51 SP-E	PAC-SH53 TM-E	PAC-SH65 OF-E	PAC-SF28 OF-E	PAC-SH48 AS-E	MAC-093 SS-E
Page			P.8	P.9	P.10	P.11	P.12	P.13	P.14	P.15	P.16	P.17	P.18	P.20	P.22	P.22	P.22	P.23	P.23	P.23	P.23	P.24	P.26	P.28	P.33	P.35	P.36	P.38
M series	Wall Mounted	MSZ-FD25VA(S)			●					●																		●
		MSZ-FD35VA(S)			●					●																		●
		MSZ-FD50VA(S)			●					●																		●
		MSZ-GE22VA						●																				●
		MSZ-GE25VA						●																				●
		MSZ-GE35VA						●																				●
		MSZ-GE42VA						●																				●
		MSZ-GE50VA						●																				●
		MSZ-GA60VA				●																						
		MSZ-GA71VA				●																						
		MSZ-HC25VA									●																	
		MSZ-HC35VA									●																	
		MSZ-HC35VAB									●																	
		MSC-GE20VB	●																									
		MSC-GE25VB	●																									
		MSC-GE35VB	●																									
		MSH-GE50VB		●																								
		MSH-GA60VB		●																								
		MSH-GD80VB		●																								
		MS-GE50VB		●																								
		MS-GA60VB		●																								
		MS-GD80VB		●																								
	Floor Standing	MFZ-KA25VA					●																					
		MFZ-KA35VA					●																					
		MFZ-KA50VA					●																					
	1-way Cassette	MLZ-KA25VA							●			●																
		MLZ-KA35VA							●			●																
		MLZ-KA50VA							●			●																
S series	4-way Cassette	SLZ-KA25VA																										
		SLZ-KA25VAL																										
		SLZ-KA35VA																										
		SLZ-KA35VAL																										
		SLZ-KA50VA																										
		SLZ-KA50VAL																										
	Ceiling Concealed	SEZ-KD25VA																										
		SEZ-KD25VAL																										
		SEZ-KD35VA																										
		SEZ-KD35VAL																										
		SEZ-KD50VA																										
		SEZ-KD50VAL																										
		SEZ-KD60VA																										
		SEZ-KD60VAL																										
		SEZ-KD71VA																										
		SEZ-KD71VAL																										
P series	4-way Cassette	PLA-RP35BA												●								●	●	●	●		●	
		PLA-RP50BA												●								●	●	●	●		●	
		PLA-RP60BA												●								●	●	●	●		●	
		PLA-RP71BA2												●								●	●	●	●		●	
		PLA-RP71BA												●								●	●	●	●		●	
		PLA-RP100BA3												●								●	●	●	●		●	
		PLA-RP100BA												●								●	●	●	●		●	
		PLA-RP125BA2												●								●	●	●	●		●	
		PLA-RP125BA												●								●	●	●	●		●	
		PLA-RP140BA2												●								●	●	●	●		●	
	Ceiling Concealed	PEAD-RP35JA(L)																●										
		PEAD-RP50JA(L)																●										
		PEAD-RP60JA(L)																	●									
		PEAD-RP71JA(L)																	●									
		PEAD-RP100JA(L)																		●								
		PEAD-RP125JA(L)																		●								
		PEAD-RP140JA(L)																			●							
		PEA-RP200GA																										
		PEA-RP250GA																										
		PEA-RP400GA																										
		PEA-RP500GA																										
	Wall Mounted	PKA-RP35HAL																										
		PKA-RP50HAL																										
		PKA-RP60KAL																										
		PKA-RP71KAL																										
		PKA-RP100KAL																										
	Ceiling Suspended	PCA-RP50KA													●													
		PCA-RP60KA														●												
		PCA-RP71KA														●												
		PCA-RP100KA															●											
		PCA-RP125KA															●											
		PCA-RP140KA															●											
		PCA-RP71HA											●													●		
		PCA-RP125HA											●													●		
	Floor Standing	PSA-RP71GA																										
		PSA-RP100GA																										
		PSA-RP125GA																										
		PSA-RP140GA																										

*1:In the case the outdoor unit is SUZ or MXZ, the indoor unit of P-series can be connected
*2:In the case the outdoor unit is SUZ or MXZ,the indoor unit of P-series can be connected (MAC-397IF-E required)
*3:MAC-397IF-E is required
*4:Unable to use with wireless remote controller
*5:2 pieces of interface is necessary for 1 indoor unit.

Drain pump						Decoration cover		MA & Contact terminal interface	M-NET interface	Centralized on/off remote controller	Power supply terminal kit				Wired remote contoller		Wireless remote controller					Remote sensor	Remote on/off adapter	Remote operation adapter	Connector cable for remote display
															Controller	Controller kit for PKA(H)	Signal sender	Signal receiver		Controller kit (Sender & receiver)	Controller holder				
PAC-SH94DM-E	PAC-SH75DM-E	PAC-SH83DM-E	PAC-SH84DM-E	PAC-SH85DM-E	PAC-KE07DM-E	PAC-SF81KC-E	PAC-SF82KC-E	MAC-397IF-E	MAC-399IF-E	MAC-821SC-E	PAC-SG94HR-E	PAC-SG96HR-E	PAC-SG97HR-E	PAC-SH52HR-E	PAR-21MAA-J	PAR-21MAAT-E	PAR-SL97A-E	PAR-SA9CA-E	PAR-SA9FA-E	PAR-SL94B-E	MAC-1200RC	PAC-SE41TS-E	PAC-SE55RA-E	PAC-SF40RM-E	PAC-SA88HA-E
P.40	P.44	P.48	P.48	P.48	P.54	P.60	P.62	P.67	P.76	P.84	P.90	P.93	P.94	P.99	P.102	P.110	P.122	P.123	P.127	P.129	P.137	P.138	P.140	P.142	P.146
								●	●	●*3					●*3										
								●	●	●*3					●*3										
								●	●	●*3					●*3										
								●	●	●*3					●*3										
								●	●	●*3					●*3										
								●	●	●*3					●*3										
								●	●	●*3					●*3										
								●	●	●*3					●*3										
								●	●	●*3					●*3										
								●	●	●*3					●*3										
																					●				
																					●				
																					●				
								●	●	●*3					●*3										
								●	●	●*3					●*3										
								●	●	●*3					●*3										
								●	●	●*3					●*3										
								●	●	●*3					●*3										
								●	●	●*3					●*3										
								●	●	●*3												●	●	●*4	●
								●	●	●*3												●	●		●
								●	●	●*3												●	●	●*4	●
								●	●	●*3												●	●		●
								●	●	●*3												●	●	●*4	●
								●	●	●*3												●	●		●
					●			●	●	●*3							●	●				●	●	●	●
					●			●	●	●*3							●					●	●		●
					●			●	●	●*3							●	●				●	●	●	●
					●			●	●	●*3							●					●	●		●
					●			●	●	●*3							●	●				●	●	●	●
					●			●	●	●*3							●					●	●		●
					●			●	●	●*3							●	●				●	●	●	●
					●			●	●	●*3							●					●	●		●
					●			●	●	●*3							●	●				●	●	●	●
					●			●	●	●*3							●					●	●	●	●
								●*1	●*1	●*2				●			●		●			●	●		●
								●*1	●*1	●*2				●			●		●			●	●	●	●
								●*1	●*1	●*2				●			●		●			●	●	●	●
								●*1	●*1	●*2				●			●		●			●	●	●	●
								●*1	●*1	●*2				●			●		●			●	●	●	●
								●*1	●*1	●*2				●			●		●			●	●	●	●
								●*1	●*1	●*2				●			●		●			●	●	●	●
								●*1	●*1	●*2				●			●		●			●	●	●	●
								●*1	●*1	●*2				●			●		●			●	●	●	●
								●*1	●*1	●*2				●			●		●			●	●	●	●
								●*1	●*1	●*2			●					●				●	●	●	●
								●*1	●*1	●*2			●					●				●	●	●	●
								●*1	●*1	●*2			●					●				●	●	●	●
								●*1	●*1	●*2			●					●				●	●	●	●
								●*1	●*1	●*2			●					●				●	●	●	●
								●*1	●*1	●*2			●					●				●	●	●	●
								●*1	●*1	●*2			●					●				●	●	●	●
								●*1	●*1	●*2							●	●				●	●	●	●
								●*1	●*1	●*2							●	●				●	●	●	●
									●*5	●*2												●			
									●*5	●*2												●			
	●										●					●						●	●		●
	●										●					●						●	●		●
●											●					●						●	●		●
●											●					●						●	●		●
●											●					●						●	●		●
		●						●*1	●*1	●*2		●								●		●	●	●	●
				●				●*1	●*1	●*2		●								●		●	●	●	●
			●					●*1	●*1	●*2		●								●		●	●	●	●
			●					●*1	●*1	●*2		●								●		●	●	●	●
			●					●*1	●*1	●*2		●								●		●	●	●	●
			●					●*1	●*1	●*2		●								●		●	●	●	●
						●		●*1	●*1	●*2			●									●	●	●	●
							●	●*1	●*1	●*2			●									●	●	●	●
								●*1	●*1	●*2		●										●	●	●	●
								●*1	●*1	●*2		●										●	●	●	●
								●*1	●*1	●*2		●										●	●	●	●
								●*1	●*1	●*2		●										●	●	●	●

*1:In the case the outdoor unit is SUZ or MXZ, the indoor unit of P-series can be connected

*2:In the case the outdoor unit is SUZ or MXZ,the indoor unit of P-series can be connected (MAC-397IF-E required)

*3:MAC-397IF-E is required

*4:Unable to use with wireless remote controller

*5:2 pieces of interface is necessary for 1 indoor unit.

Optional Parts List <Outdoor>

Outdoor unit \ Option part			Distribution pipe						Joint pipe									Filter dryer for liquid pipe		
			For twin use (50:50)		For triple use (33:33:33)	For quadruple use (25:25:25:25)	Flare connection type	Brazing type	Unit Φ6.35 --> Pipe Φ9.52	Unit Φ9.52 --> Pipe Φ12.7	Unit Φ12.7 --> Pipe Φ15.88	Unit Φ15.88 --> Pipe Φ19.05	Unit Φ9.52 --> Pipe Φ15.88	Unit Φ6.35 --> Pipe Φ9.52	Unit Φ9.52 --> Pipe Φ12.7	Unit Φ12.7 --> Pipe Φ9.52	Unit Φ12.7 --> Pipe Φ15.88	For pipe Φ6.35	For pipe Φ9.52	For pipe Φ12.7
			MSDD-50TR-E	MSDD-50WR-E	MSDT-111R-E	MSDF-1111R-E	MSDD-50AR-E	MSDD-50BR-E	PAC-SG72 RJ-E	PAC-SG73 RJ-E	PAC-SG74 RJ-E	PAC-SG75 RJ-E	PAC-SG76 RJ-E	PAC-493 PI	MAC-A454 JP-E	MAC-A455 JP-E	MAC-A456 JP-E	PAC-SG81 DR-E	PAC-SG82 DR-E	PAC-SG85 DR-E
Page			P.148	P.150	P.152	P.154	P.156	P.158	P.160	P.161	P.162	P.163	P.164	P.165	P.166	P.167	P.168	P.169	P.172	P.175
M series	F series	MUZ-FD25VA																		
		MUZ-FD25VABH																		
		MUZ-FD35VA																		
		MUZ-FD35VABH																		
		MUZ-FD50VA																		
		MUZ-FD50VABH																		
	G series	MUZ-GE25VA																		
		MUZ-GE25VAH																		
		MUZ-GE35VA																		
		MUZ-GE35VAH																		
		MUZ-GE42VA																		
		MUZ-GE42VAH																		
		MUZ-GE50VA																		
		MUZ-GE50VAH																		
	H series	MUZ-HC25VA																		
		MUZ-HC35VA																		
		MUZ-HC35VAB																		
	Fixed Speed (Heating&Cooling)	MUH-GA20VB																		
		MUH-GA25VB																		
		MUH-GA35VB																		
		MUH-GE50VB																		
		MUH-GA60VB																		
		MUH-GD80VB																		
	Fixed Speed (Cooling Only)	MU-GA20VB																		
		MU-GA25VB																		
		MU-GA35VB																		
		MU-GE50VB																		
		MU-GA60VB																		
		MU-GD80VB																		
S series		SUZ-KA25VA																		
		SUZ-KA25VAH																		
		SUZ-KA35VA								●										
		SUZ-KA35VAH								●										
		SUZ-KA50VA								●										
		SUZ-KA60VA								●										
		SUZ-KA71VA								●										
P series	ZUBADAN	PUHZ-HRP71VHA2	●																●	
		PUHZ-HRP100VHA2	●																●	
		PUHZ-HRP100YHA2	●																●	
		PUHZ-HRP125YHA2	●																●	
	Power Inverter	PUHZ-RP35VHA4							●									●		
		PUHZ-RP50VHA4							●									●		
		PUHZ-RP60VHA4								●		●							●	
		PUHZ-RP71VHA4	●							●		●							●	
		PUHZ-RP100VKA	●							●		●							●	
		PUHZ-RP100YKA	●							●		●							●	
		PUHZ-RP125VKA	●							●		●							●	
		PUHZ-RP125YKA	●							●		●							●	
		PUHZ-RP140VKA	●		●					●		●							●	
		PUHZ-RP140YKA	●		●					●		●							●	
		PUHZ-RP200YKA		●	●	●				●									●	
		PUHZ-RP250YKA		●	●	●					●									●
	Standard Inverter	PUHZ-P100VHA3	●																●	
		PUHZ-P125VHA3	●																●	
		PUHZ-P140VHA3	●		●														●	
		PUHZ-P200YHA3		●	●	●													●	
		PUHZ-P250YHA3		●	●	●														●
	Fixed Speed (Heating&Cooling)	PUH-P71VHA	●																●	
		PUH-P71YHA	●																●	
		PUH-P100VHA	●																●	
		PUH-P100YHA	●																●	
		PUH-P125YHA	●																●	
		PUH-P140YHA	●		●														●	
	Fixed Speed (Cooling Only)	PU-P71VHA	●																●	
		PU-P71YHA	●																●	
		PU-P100VHA	●																●	
		PU-P100YHA	●																●	
		PU-P125YHA	●																●	
		PU-P140YHA	●		●														●	
MXZ series		MXZ-2A30VA																		
		MXZ-2A40VA																		
		MXZ-2A52VA																		
		MXZ-3A54VA													●					
		MXZ-4A71VA											●		●	●	●			
		MXZ-4A80VA											●	●	●	●	●			
		MXZ-5A100VA											●	●	●	●	●			
		MXZ-8A140VA					●	●					●	●	●		●		●	

Branch box outer cover	Air outlet guide					Air protect guide			Drain socket		Centralized drain pan			M-NET converter	Control/ service tool	Remote On/Off Input Signal adaptor	Step Interface		
																	10 PC boards W/0 attachment kit	1 PC boards W/0 attachment kit	1 PC boards W/0 attachment kit
PAC-AK350 CVR-E	MAC-889SG	MAC-856SG	PAC-SG58 SG-E	PAC-SG59 SG-E	PAC-SH96 SG-E	PAC-SG56 AG-E	PAC-SH63 AG-E	PAC-SH95 AG-E	PAC-SF37 DS-E	PAC-SG61 DS-E	PAC-SG63 DP-E	PAC-SG64 DP-E	PAC-SH97 DP-E	PAC-SF81 MA-E	PAC-SK52ST	PAC-SC36NA	PAC-IF010-E	PAC-IF011B-E	PAC-IF012B-E
P.178	P.180	P.183	P.184	P.187	P.189	P.191	P.193	P.196	P.199	P.201	P.203	P.205	P.207	P.209	P.223	P.224	P.225	P.225	P.225
	●																		
	●																		
	●																		
	●																		
	●																		
	●																		
	●																		
	●																		
	●																		
	●																		
	●																		
	●																		
	●																		
	●																		
	●																		
	●																		
	●																		
	●																		
	●																		
	●																		
	●																		
	●																		
	●																		
	●																		
	●																		
	●																		
	●																		
	●																		
	●																		
																			●
																			●
																			●
																			●
																			●
																			●
																			●
				●			●			●		●		●	●	●	●	●	●
				●			●			●		●		●	●	●	●	●	●
				●			●			●		●		●	●	●	●	●	●
				●			●			●		●		●	●	●	●	●	●
			●			●				●	●			●	●	●	●	●	●
			●			●				●	●			●	●	●	●	●	●
				●			●			●		●		●	●	●	●	●	●
				●			●			●		●		●	●	●	●	●	●
					●			●		●			●	●	●	●	●	●	●
					●			●		●			●	●	●	●	●	●	●
					●			●		●			●	●	●	●	●	●	●
					●			●		●			●	●	●	●	●	●	●
					●			●		●			●	●	●	●	●	●	●
					●			●		●			●	●	●	●	●	●	●
					●			●		●			●	●	●	●	●	●	●
					●			●		●			●	●	●	●	●	●	●
				●			●			●		●		●	●	●			●
				●			●			●		●		●	●	●			●
				●			●			●		●		●	●	●			●
				●			●			●		●		●	●	●			●
				●			●			●		●		●	●	●			●
				●			●		●					●	●				●
				●			●		●					●	●				●
				●			●		●					●	●				●
				●			●		●					●	●				●
				●			●		●					●	●				●
				●			●		●					●	●				●
				●			●		●					●	●				
				●			●		●					●	●				
				●			●		●					●	●				
				●			●		●					●	●				
				●			●		●					●	●				
				●			●		●					●	●				
	●																		
	●																		
	●																		
		●																	
		●																	
		●																	
		●																	
●				●						●		●				●			

SYSTEM CONTROL

Versatile system controls can be realised using optional parts, relay circuits, control panels, etc.

MAJOR SYSTEM CONTROL

	System Examples		
Indoor Unit	M Series Indoor Unit	S Series & P Series Indoor Unit	P Series Indoor Unit
Outdoor Unit	M Series and MXZ Series Outdoor	S Series and MXZ Series Outdoor	P Series Outdoor
PAR-21MAA Control	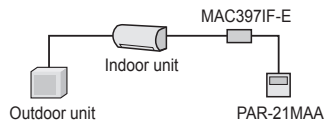	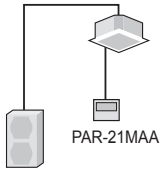	
Details	• Wired remote controller can be connected to indoor unit	Standard equipment (for indoor units compatible with wired remote controllers)	
Major Optional Parts Required	• MAC-397IF-E (Interface) • PAR-21MAA (Wired remote controller)	• PAR-21MAA (Wired remote controller)	
System Group Control	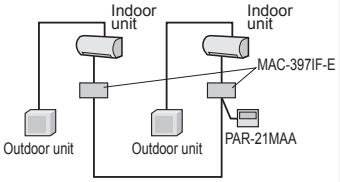	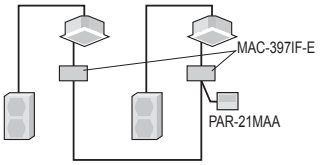	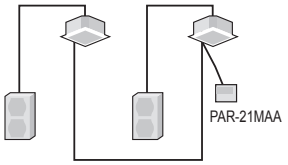
Details	• One remote controller can control plural air conditioners with the same settings simultaneously. • One remote controller can control up to 16 refrigerant systems. (When connected to a MXZ unit, MAC-397IF-E is counted as one system.) • Up to two remote controller can be connected.		
Major Optional Parts Required	• MAC-397IF-E (Interface) • PAR-21MAA (Wired remote controller)		
Centralised On/Off Control	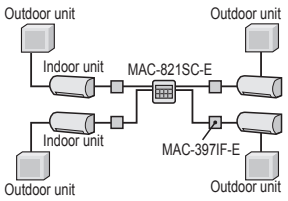	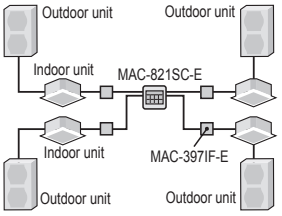	
Details	• Up to 8 indoor units can be switched On/Off with one remote controller.		
Major Optional Parts Required	• MAC-397IF-E (Interface) • MAC-821SC-E (Centralised remote controller)		
M-NET connection	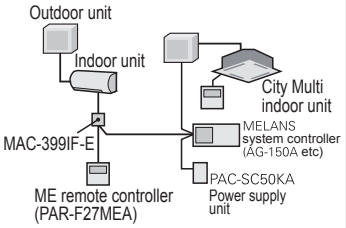	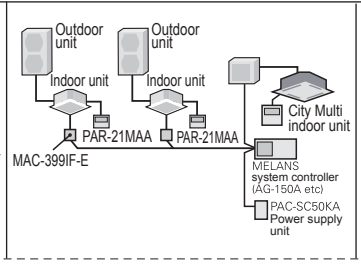	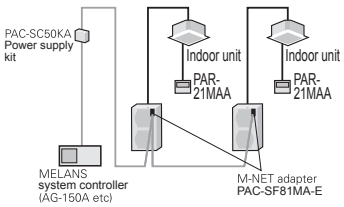
Details	• Group of air conditioners can be controlled by MELANS system controller (M-NET).		
Major Optional Parts Required	• MAC-399IF-E (M-NET Interface) • MELANS System controller • PAC-SC50KA (power supply unit)		• PAC-SF81MA-E (M-NET converter) • MELANS System controller • PAC-SC50KA (power supply unit)

OTHERS

For M Series Indoor Units (New A-control Models Only)

	System Examples	Connection Details	Control Details	Major Optional Parts Required
1 Remote On/Off Operation • Air conditioner can be started/ stopped remotely. (1 and 2 can be used in combination)	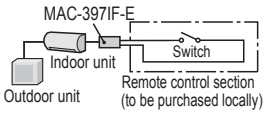	Connect the interface to the air conditioner. Then connect the locally purchased remote controller to the terminal in the interface.	On/Off operation is possible from a remote location.	• MAC-397IF (Interface) • Parts for circuit such as relay box, lead wire, etc. (to be purchased locally)
2 Remote Display of Operation Status • The On/Off status of air conditioners can be confirmed remotely. (1 and 2 can be used in combination)	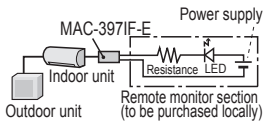	Connect the interface to the air conditioner. Then connect the locally purchased remote controller to the terminal in the interface.	The operation status (On/Off) or error signals can be monitored from a remote location.	• MAC-397IF-E (Interface) • Parts for circuit to be purchased locally (DC power source needed)

For P Series and S Series Indoor Units

	System Examples		Details	Major Optional Parts Required
	Wired remote controller	Wireless remote controller		
A 2-remote Controller Control With two remote controllers, control can be performed locally and remotely from two locations.	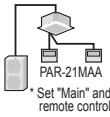 (Example of 1 : 1 system)	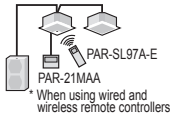 (Example of Simultaneous Twin)	• Up to two remote controllers can be connected to one group. • Both wired and wireless remote controllers can be used in combination.	• Wired Remote Controller PAR-21MAA • Wired Remote Controller Kit for PKA PAR-21MAAT-E • Wireless Remote Controller PAR-SL97A-E (Except for SLZ) • Wireless Remote Controller Kit for PCA PAR-SL99B-E
B Operation Control by Level Signal Air conditioner can be started/ stopped remotely. In addition, On/Off operation by local remote controller can be prohibited/permitted.	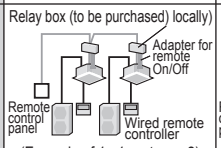 (Example of 1 : 1 system x 2)	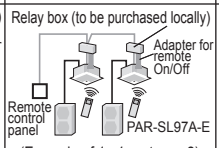 (Example of 1 : 1 system x 2)	• Operation other than On/Off (e.g., adjustment of temperature, fan speed, and airflow) can be performed even when remote controller operation is prohibited. • Timer control is possible with an external timer.	• Adapter for remote On/Off PAC-SE55RA-E • Relay box (to be purchased locally) • Remote control panel (to be purchased locally)
C Operation Control by Pulse Signal	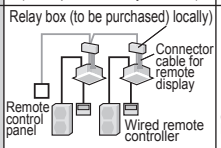 (Example of 1 : 1 system x 2)	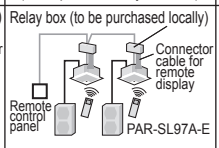 (Example of 1 : 1 system x 2)	• The pulse signal can be turned On/Off. • Operation/emergency signal can be received at a remote location.	• Connector cable for remote display PAC-SA88HA-E / PAC-725AD (10 pcs. x PAC-SA88HA-E) • Relay box (to be purchased locally) • Remote control panel (to be purchased locally)
D Remote Display of Operating Status Operating status can be displayed at a remote location.	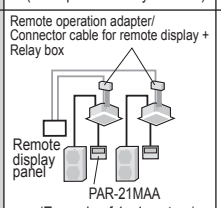 (Example of 1 : 1 system)	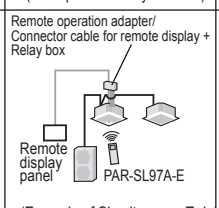 (Example of Simultaneous Twin)	• Operation/emergency signal can be received at a remote location (when channeled through the PAC-SF40RM → no-voltage signal, when channeled through the PAC-SA88HA-E → DC 12V signal).	• Remote display panel (to be purchased locally) • Connector cable for remote display PAC-SA88HA-E / PAC-725AD (10 pcs. x PAC-SA88HA-E) • Relay box (to be purchased locally) • Remote operation adapter PAC-SF40RM *Unable to use with wireless remote controller • Remote display panel (to be purchased locally)
E Timer Operation Allows On/Off operation with timer *For control by an external timer, refer to B Operation Control by Level Signal.	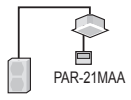 (Example of 1 : 1 system)		• Weekly Timer: On/Off and up to 8 pattern temperatures can be set for each calendar day. (Initial setting) • Simple Timer: On/Off can be set once each within 72 hr in intervals of one hour. • Auto-off Timer: Operation will be switched off after a certain time elapse. Set time can be changed from 30 min. to 4 hr. at 30 min. intervals. *Simple Timer and Auto-off Timer cannot be used at the same time.	Standard functions of PAR-21MAA

Air Cleaning Filter

MAC-1300FT

Photo

Descriptions

- Air Cleaning Filter removes fine dust of 0.01 micron from air by means of static electricity.
- DO NOT reuse Air Cleaning Filter even if it is washed.

Applicable Models

- MSC-GE20VB
- MSC-GE25VB
- MSC-GE35VB

Specifications

Dimensions

Unit : mm

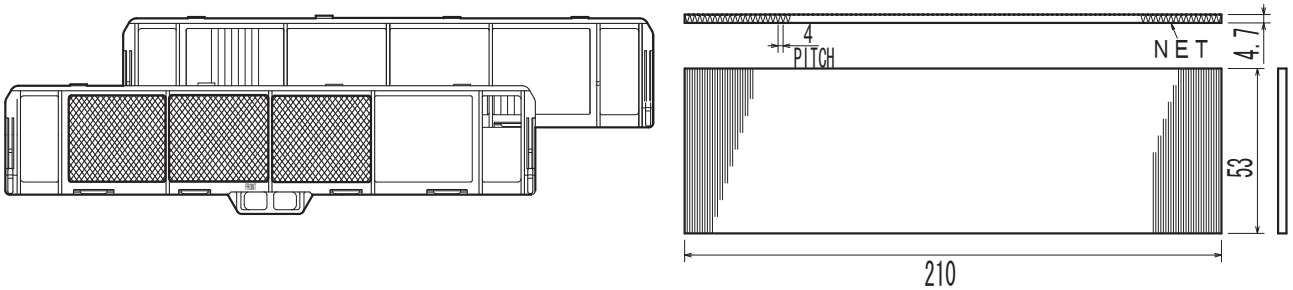

How to Use / How to Install

REPLACEMENT OF THE AIR CLEANING FILTER

When the capacity is lowered because of dirt, etc., it is necessary to replace the air cleaning filter.

Air cleaning filter replacement (about once every 4 months)

1 **Remove the catechin air filter.**

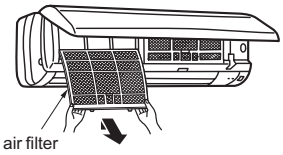

2 **Remove the air cleaning filter (White bellows type).**

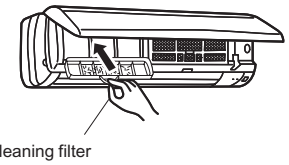

3 **Install a new air cleaning filter.**

4 **Install the catechin air filter and securely**

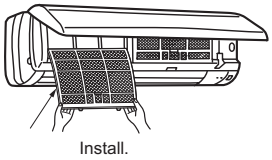

Air cleaning filter

- If the air cleaning filter is clogged, it may lower the unit's capacity or cause condensation at the air outlet.
- The air cleaning filter is disposable. The standard usable term is about 4 months. However, if the colour of the filter turns to dark brown, replace the filter at once.

Air Cleaning Filter

MAC-1700FT

Photo

Descriptions

- Air Cleaning Filter removes fine dust of 0.01 micron from air by means of static electricity.
- DO NOT reuse Air Cleaning Filter even if it is washed.

Applicable Models

- MS(H)-GE50VB
- MS(H)-GA60VB
- MS(H)-GD80VB

Specifications

Dimensions

Unit : mm

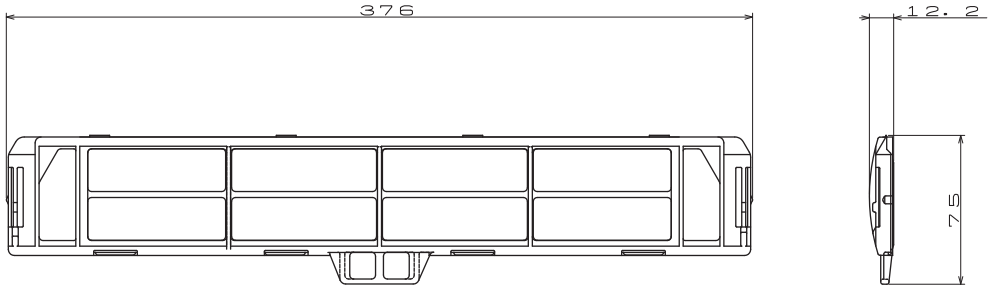

How to Use / How to Install

REPLACEMENT OF THE AIR CLEANING FILTER (OPTION)

When the capacity is lowered because of dirt, etc., it is necessary to replace the air cleaning filter.

Air cleaning filter replacement

1 **Remove the catechin air filter.**

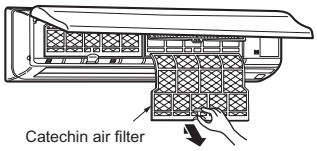

2 **Remove the air cleaning filter (White bellows type).**

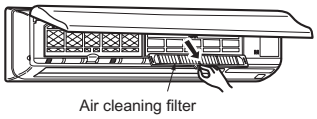

About once every 4 months

1 **Install a new air cleaning filter.**

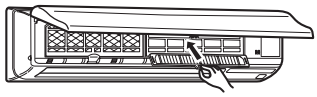

2 **Install the catechin air filter and securely close the front panel.**

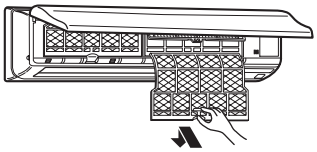

Air cleaning filter

- If the air cleaning filter is clogged, it may lower the unit's capacity or cause condensation at the air outlet.
- The air cleaning filter is disposable. The standard usable term is about 4 months. However, if the colour of the filter turns to dark brown, replace the filter at once.

PLATINUM CATALYST DEODORIZING FILTER **MAC-307FT-E**

Photo

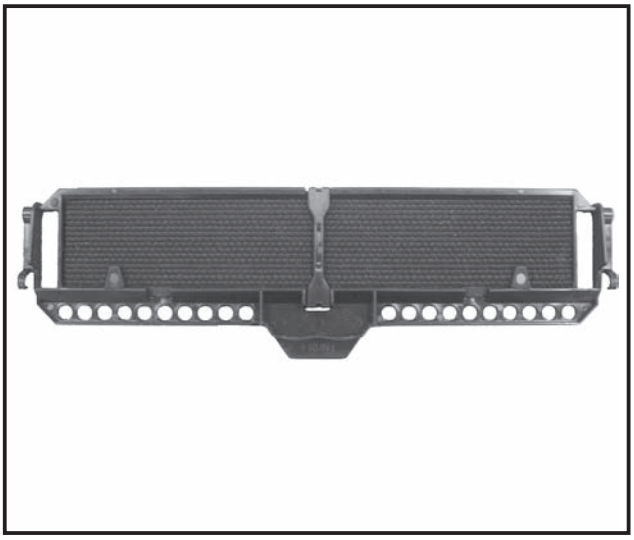

Descriptions

Minimum holes as small as 1 nanometer on a surface of approx imately 3,000m² capture small foul-smeling substances in the air, then break down the source of the odors with the power of the ozone generated in a plasma electrode unit and the platinum catalyst contained in the filter.

Applicable Models

- MSZ-FD25VA(S)
- MSZ-FD35VA(S)
- MSZ-FD50VA(S)

Specifications

Dimensions

Unit : mm

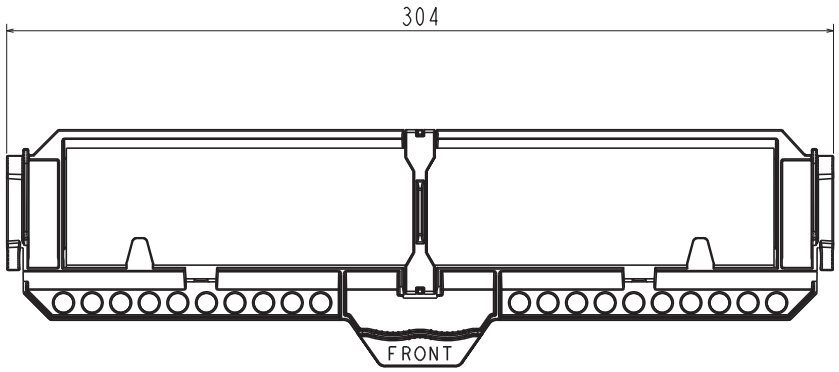

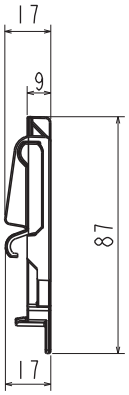

How to Use / How to Install

Front panel

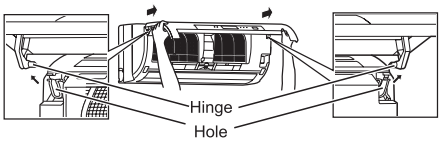

1. Lift the front panel until a “click” is heard.
2. Hold the hinges and pull to remove as shown in the above illustration.
   - Wipe with a soft dry cloth or wash it with water.
   - Do not soak it in water for more than two hours.
   - Dry it well in shade before installing it.
3. Install the panel by following the removal procedure in reverse. Close the front panel securely and press the positions indicated by the arrows.

Every 3 months:

- Remove dirt by a vacuum cleaner, or soak the filter in lukewarm water (30 to 40°C) for about 15 minutes. Rinse well.
- After washing, dry it well in shade and put it back to its original position.
- Deodorizing feature recovers by cleaning the filter.

When dirt or smell cannot be removed by cleaning:

- Replace it with a new air cleaning filter.
- Parts Number MAC-307FT-E

Anti-Allergy Enzyme Filter

MAC-2300FT

Photo

Descriptions

This filter catches dead mites and their droppings, pollen and other allergens on the filter filament, then decomposes them with artificial enzymes.
(Artificial enzyme catalyst on the filament catches the allergens and helps the chemical reaction with Oxygen and severs the S-S* bonds. *S=Sulfur atoms)

Applicable Models

- MSZ-GA60VA
- MSZ-GA71VA

Specifications

Color	Frame: White, Filter: Light blue
Material	Frame: PP, Filter: Polyester, rayon
Weight	16g

Dimensions

Unit : mm

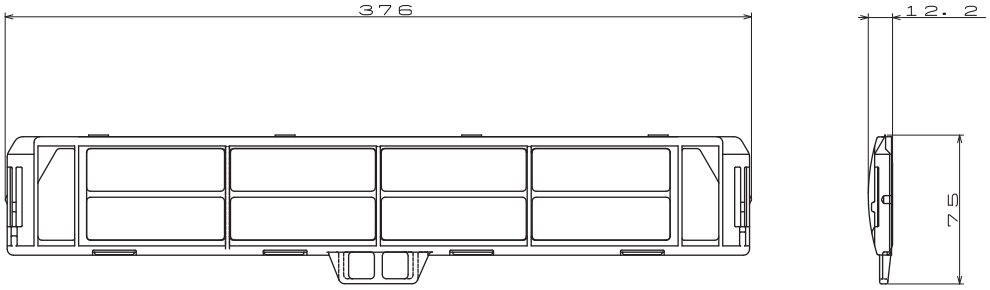

How to Use / How to Install

REPLACEMENT OF THE AIR CLEANING FILTER (OPTION)

Air cleaning filter replacement

1 **Remove the catechin air filter.**

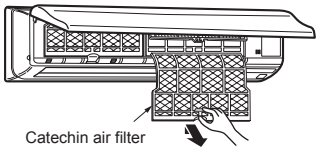

2 **Remove the air cleaning filter (Anti-allergy enzyme filter: blue bellows type).**

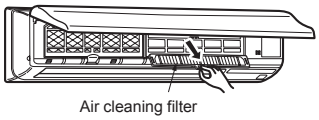

Every year

1 **Install a new air cleaning filter.**

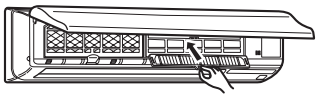

2 **Install the catechin air filter and securely close the front panel.**

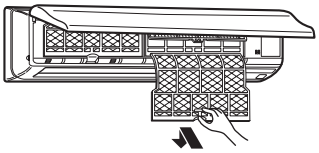

Air cleaning filter

- If the air cleaning filter is clogged, it may lower the unit's capacity or cause condensation at the air outlet.
- If AIR CLEANING FILTER is to be washed, soak AIR CLEANING FILTER in water (when showing dirt, in lukewarm water) and rinse it delicately, without removing the filter from the frame about once every 3 months.

Anti-Allergy Enzyme Filter

MAC-415FT-E

Photo

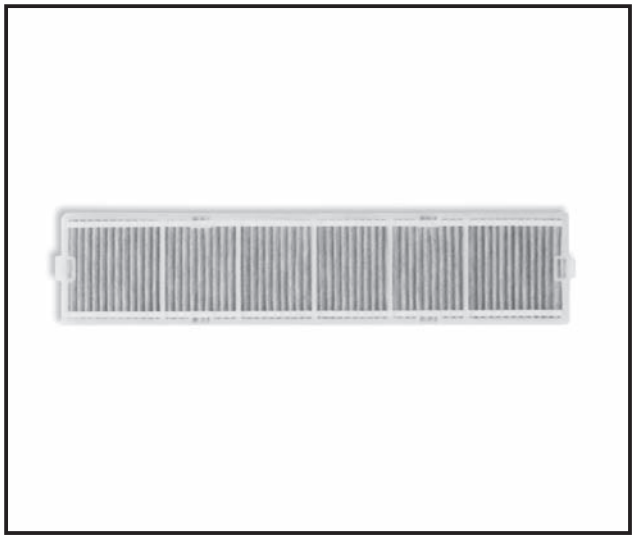

Descriptions

This filter catches dead mites and their droppings, pollen and other allergens on the filter filament, then decomposes them with artificial enzymes.
(Artificial enzyme catalyst on the filament catches the allergens and helps the chemical reaction with Oxygen and severs the S-S* bonds. *S=Sulfur atoms)

Applicable Models

- MFZ-KA25VA
- MFZ-KA35VA
- MFZ-KA50VA

Specifications

Color	Frame: White, Filter: Light blue
Material	Frame: PP, Filter: Polyester, rayon
Weight	16g

Dimensions

Unit : mm

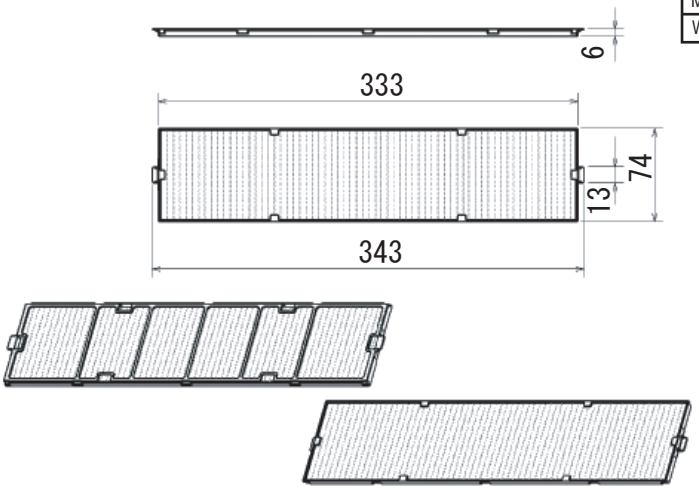

How to Use / How to Install

Air cleaning filter replacement

1 Remove the catechin air filter.

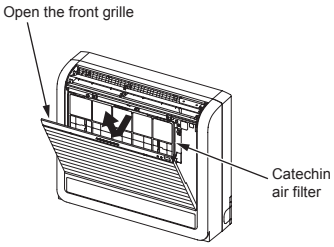

2 Remove the air cleaning filter.

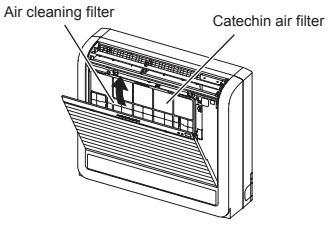

Every year

1 Attach a new air cleaning filter. Fix the filter with the tabs securely.

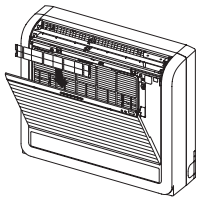

2 Install the catechin air filter.
Be sure to install its both ends into the tabs as shown below.

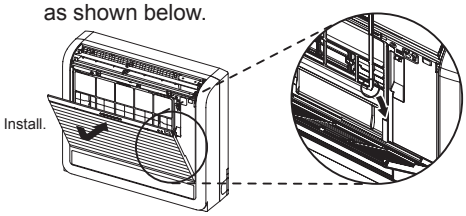

3 Securely close the front grille.

Air cleaning filter

- If the air cleaning filter is clogged, it may lower the unit's capacity or cause condensation at the air outlet.
- If AIR CLEANING FILTER is to be washed, soak AIR CLEANING FILTER in water (when showing dirt, in lukewarm water) and rinse it delicately, without removing the filter from the frame about once every 3 months.

Anti-Allergy Enzyme Filter

MAC-408FT-E

Photo

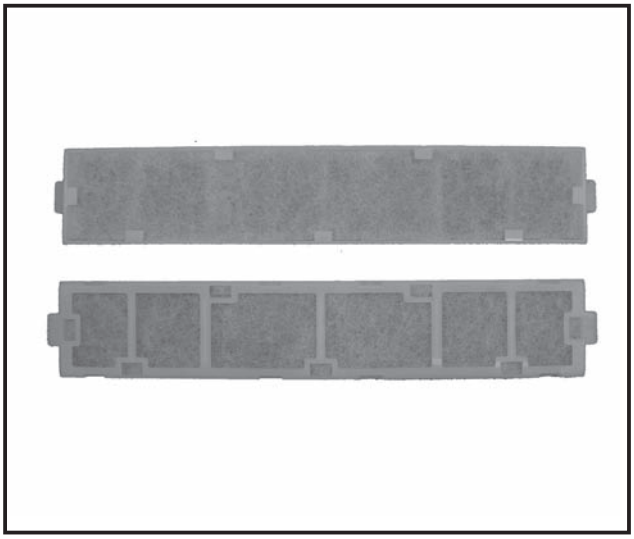

Descriptions

This filter catches dead mites and their droppings, pollen and other allergens on the filter filament, then decomposes them with artificial enzymes.
(Artificial enzyme catalyst on the filament catches the allergens and helps the chemical reaction with Oxygen and severs the S-S* bonds. *S=Sulfur atoms)

Applicable Models

- MSZ-GE22VA
- MSZ-GE42VA
- MSZ-GE25VA
- MSZ-GE50VA
- MSZ-GE35VA

Specifications

Material	Filter: Polyester, reyon, actylicresin Frame: Polypropylen
Color (Filter)	Light blue

Dimensions

Unit : mm

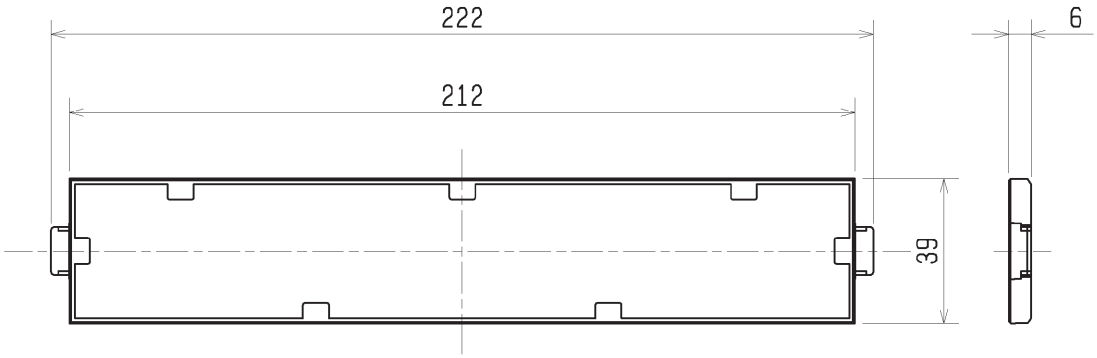

How to Use / How to Install

Front panel

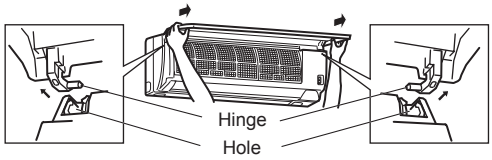

1. Lift the front panel until a “click” is heard.
2. Hold the hinges and pull to remove as shown in the above illustration.
   - Wipe with a soft dry cloth or wash it with water.
   - Do not soak it in water for more than two hours.
   - Dry it well in shade before installing it.
3. Install the panel by following the removal procedure in reverse. Close the front panel securely and press the positions indicated by the arrows.

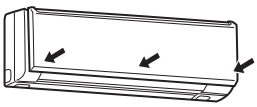

Back side of air filter

- **Clean every 3 months.**
- Soak the filter together with its frame in lukewarm water and wash it.
- After washing, dry it well in shade and put it back to its original position. Install all tabs of the air filter.
- Replace it with a new air cleaning filter **every year** for best performance.
- Parts Number MAC-408FT-E

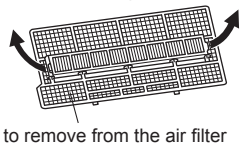

What is “Catechin air filter” ?

Catechin is a bioflavonoid that is found in green tea that has both antiviral and antioxidant qualities. In addition to these benefits, Catechin also offers excellent deodorizing characteristics. Catechin air filter uses this compound to not only improve air quality but also prevent the spread of bacteria and viruses in the room.

Anti-Allergy Enzyme Filter

MAC-171FT-E

Photo

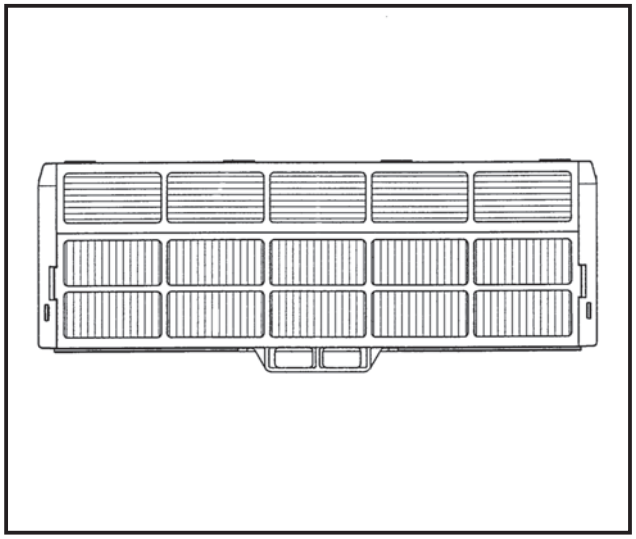

Descriptions

This filter catches dead mites and their droppings, pollen and other allergens on the filter filament, then decomposes them with artificial enzymes.
(Artificial enzyme catalyst on the filament catches the allergens and helps the chemical reaction with Oxygen and severs the S-S* bonds. *S=Sulfur atoms)

Applicable Models

- MLZ-KA25VA
- MLZ-KA35VA
- MLZ-KA50VA

Specifications

Color	White
Surface treatment	Foundation
Material	Frame: PP resin Filter: Transfomation system, Polypropylene, unwoven cloth.
Weigh	50g/piece (2piece/1unit)

Dimensions

Unit : mm

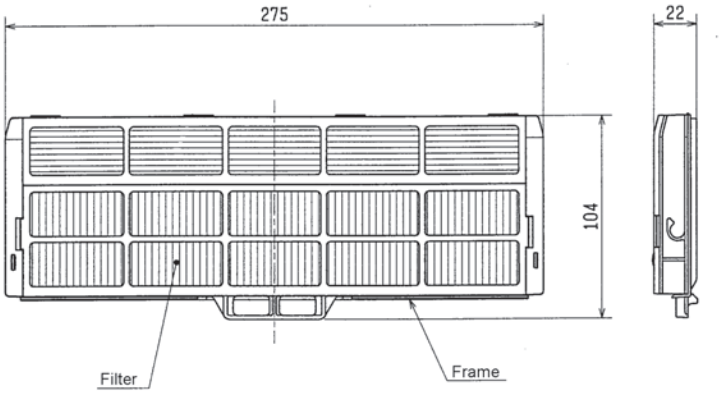

How to Use / How to Install

Intake grille

1. Press PUSH indicated on the intake grille until a “click” is heard.
2. Hold the tabs on both ends of the intake grille, and pull down to open.

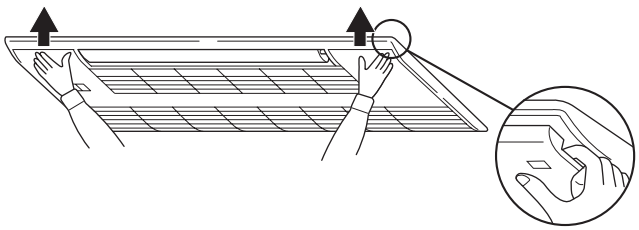

What is “Catechin air filter” ?

Catechin is a bioflavonoid that is found in green tea that has both antiviral and antioxidant qualities. In addition to these benefits, Catechin also offers excellent deodorizing characteristics. Catechin air filter uses this compound to not only improve air quality but also prevent the spread of bacteria and viruses in the room.

Air cleaning filter (Anti-Allergy Enzyme Filter, option)

Back side of air filter

- **Clean every 3 months.**
- Soak the filter together with its frame in lukewarm water and wash it.
- After washing, dry it well in shade and put it back to its original position. Install all tabs of the air filter.
- Replace it with a new air cleaning filter **every year** for best performance.
- Parts Number MAC-171FT-E

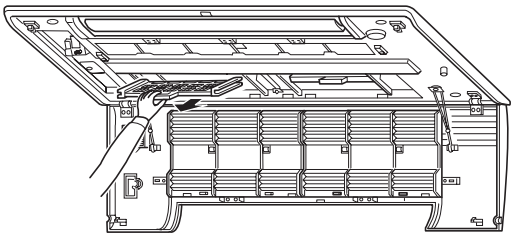

Anti-Allergen Electric Enzyme Filter MAC-417FT-E

Photo

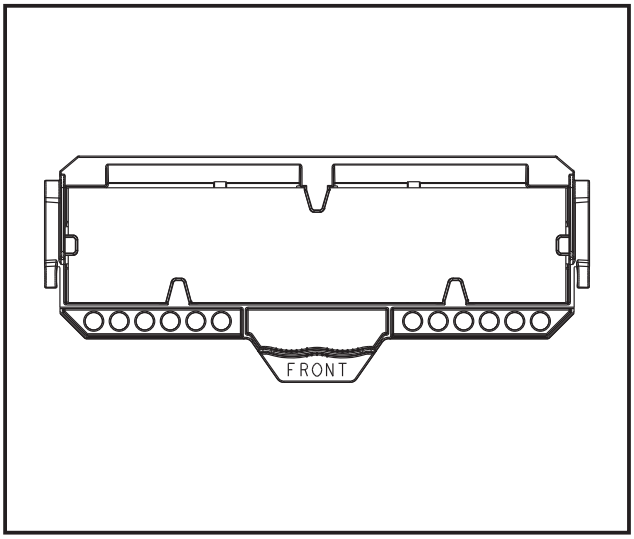

Descriptions

The power of the static electricity charged in the filter and the plasma generated in the plasma electrode unit team up to capture the bactaria, polen and other allergens in the air, which are then neutralized with the enzyme in the filter.

Applicable Models

- MSZ-FD25VA(S)
- MSZ-FD35VA(S)
- MSZ-FD50VA(S)

Specifications

Dimensions

Unit : mm

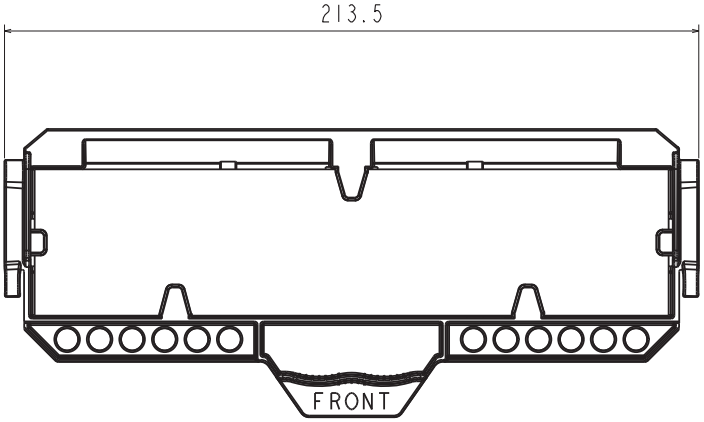

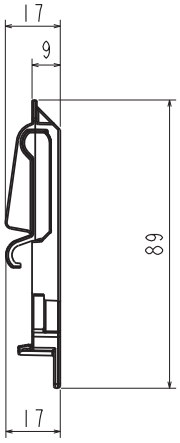

How to Use / How to Install

Front panel

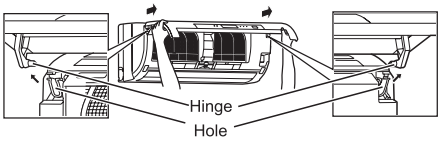

1. Lift the front panel until a “click” is heard.
2. Hold the hinges and pull to remove as shown in the above illustration.
   - Wipe with a soft dry cloth or wash it with water.
   - Do not soak it in water for more than two hours.
   - Dry it well in shade before installing it.
3. Install the panel by following the removal procedure in reverse. Close the front panel securely and press the positions indicated by the arrows.

Every 3 months:

- Remove dirt by a vacuum cleaner, or soak the filter in lukewarm water (30 to 40°C) for about 15 minutes. Rinse well.
- After washing, dry it well in shade and put it back to its original position.
- Deodorizing feature recovers by cleaning the filter.

When dirt or smell cannot be removed by cleaning:

- Replace it with a new air cleaning filter.
- Parts Number MAC-417FT-E

Catechin Air Filter

MAC-3003CF

Photo

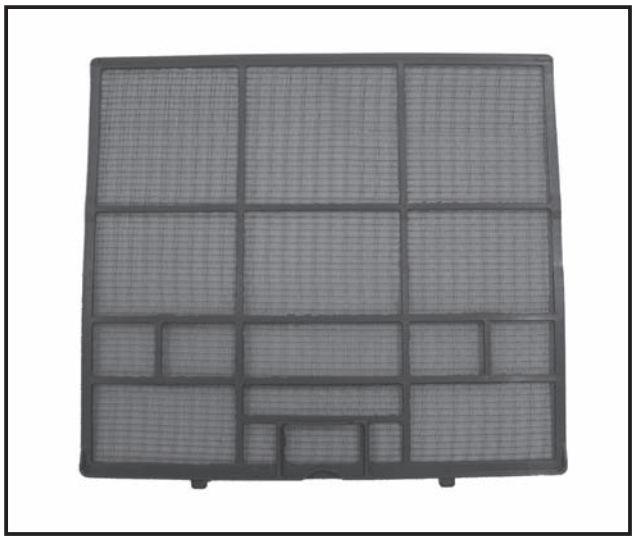

Descriptions

Catechin is a bioflavonoid that is found in green tea that has both antiviral and anotioxidant gualties.
In addition to these benefits, Catechin also ofters excellent deodorizing characteristics.
Catechin air filter uses this compound to not only improve air guality but also prevent the spread of bacteria and viruses in the room.

Applicable Models

- MSZ-HC25VA
- MSZ-HC35VA(B)

Specifications

Dimensions

Unit : mm

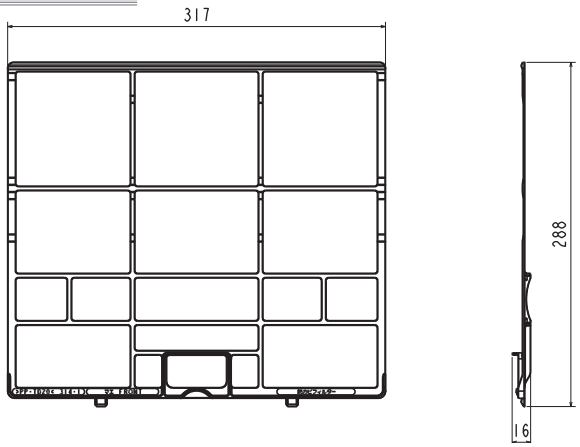

What is "Catechin air filter"?

The air filter is dyed with a natural material, catechin, that is contained in tea. The catechin air filter deodorizes odor and noxious gases such as formaldehyde, ammonia, and acetaldehyde. Moreover, it restraints the activity of the viruses adhering to the filter.

How to Use / How to Install

1 Holding the knob on the air filter, pull up the filter slightly and then pull down to remove.

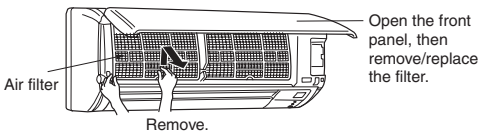

⚠ **CAUTION:**
When the air filter is to be removed, do not touch the metal parts of the indoor unit.
This may cause an injury.

2 Remove dirt from the air filter using a vacuum cleaner or by washing the filter with water.

- Do not wash with scrubbing brush or hard surface of sponge. Otherwise, the filter may deform.
- If the dirt is noticeable, wash the filter with a solution of mild detergent diluted in lukewarm water.
- If hot water (50°C or more) is used, the filter may be deformed.

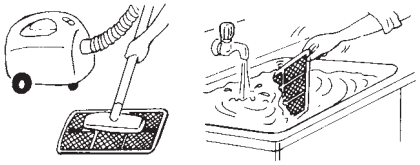

3 After washing with water/lukewarm water, dry the air filter well in the shade.

- Do not expose the air filter to direct sunlight or heat from a fire when drying it.

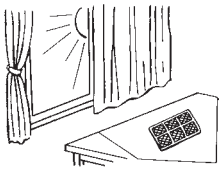

4 Install the air filter.
(Securely install its tabs.)

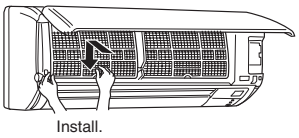

Catechin Air Filter

MAC-3004CF-E

Photo

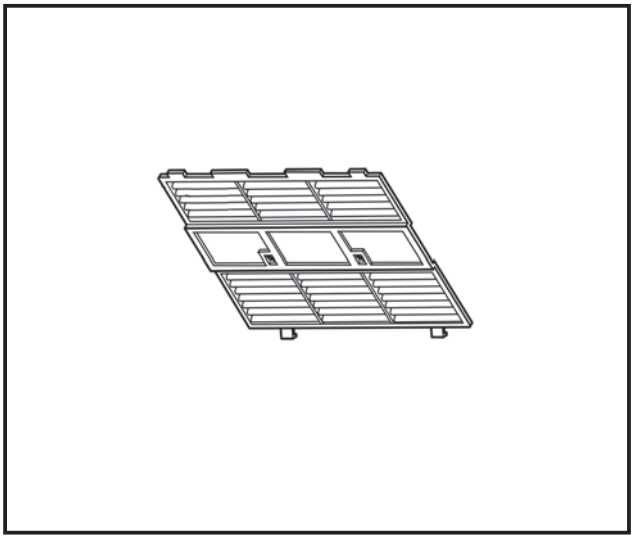

Descriptions

Catechin air filter uses this compound to not only improve air guality but also prevent the spread and viruses in the room.

Applicable Models

- MLZ-KA25VA
- MLZ-KA35VA
- MLZ-KA50VA

Specifications

Dimensions

Unit : mm

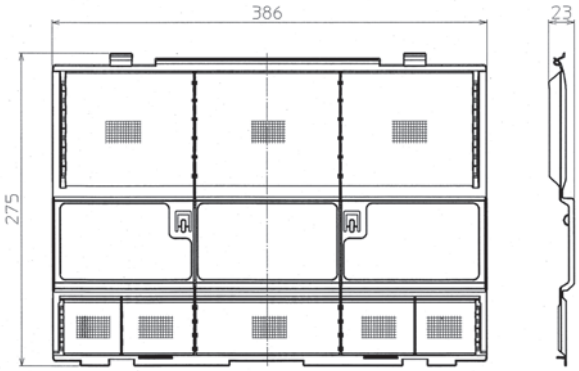

How to Use / How to Install

Intake grille

(1). Press PUSH indicated on the intake grille until a “click” is heard.
(2). Hold the tabs on both ends of the intake grille, and pull down to open.

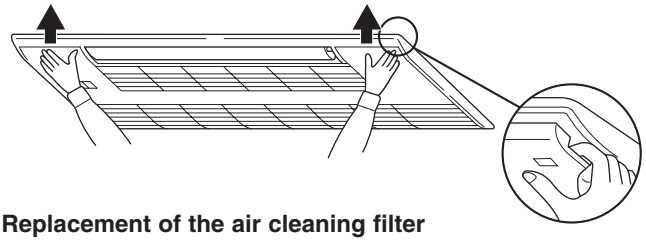

Replacement of the air cleaning filter

(1) Remove the catechin air filter.

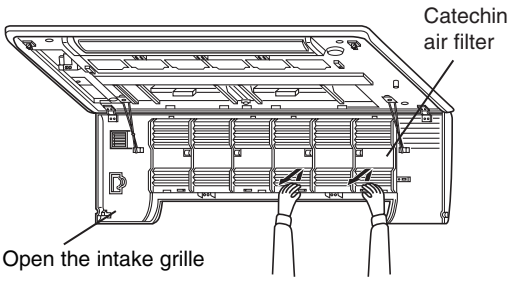

(2) Install a new catechin air filter.
Be sure to install the tabs into the intake grille hole.

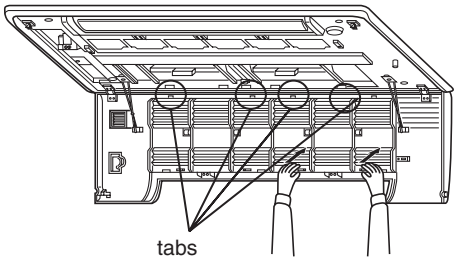

(3) Securely close the intake grille.

OPTIONAL PARTS

Oil Mist Filter Element (12 pieces) PAC-SG38KF-E

Photo

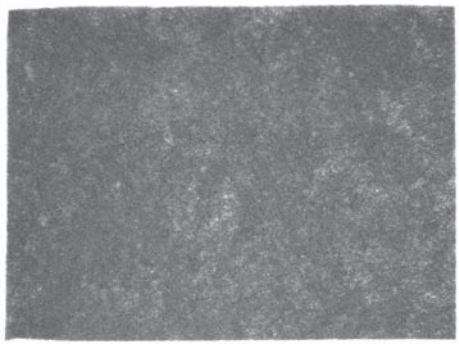

Descriptions

Filter Element (12 Pieces) for ceiling suspended models for professional kitchen use.

Applicable Models

- PCA-RP71HA
- PCA-RP125HA

Specifications

Material	Modacrylic fiber / Polyester
Color	Black
Temperature	60℃ or less
Reproduction	Disposable (Reproduction not possible)
Packing	12 elements per bag

Note: Only the filter element must be replaced
(the filter frame provided on the main body must be used)

Dimensions

Unit : mm

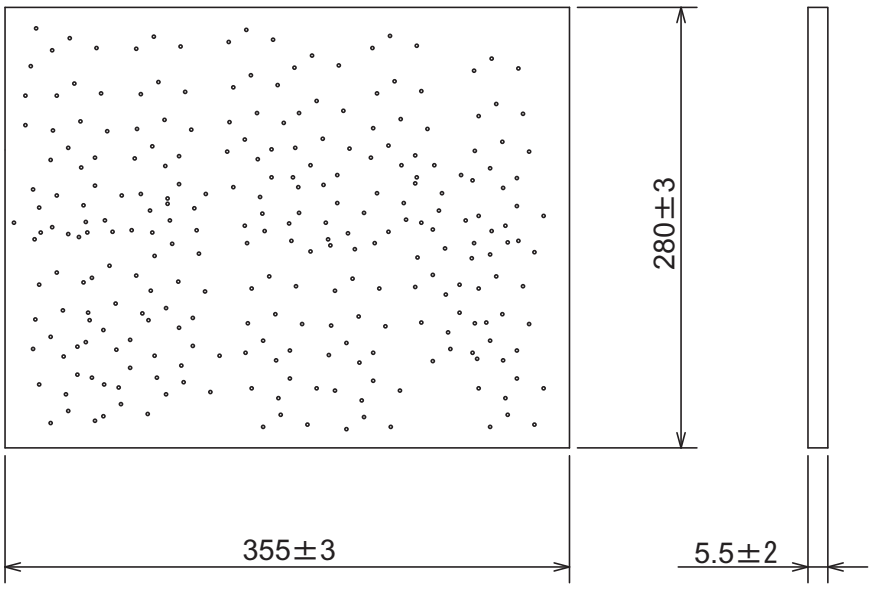

State of installation to filter frame

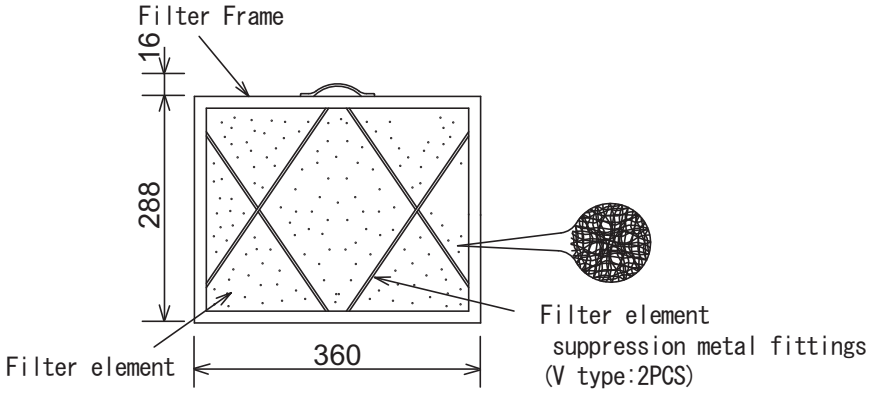

OPTIONAL PARTS

How to Use / How to Install

Cleaning the oil filter

1) Removing the oil filter

①Remove the filter by sliding it in the direction of an arrow.

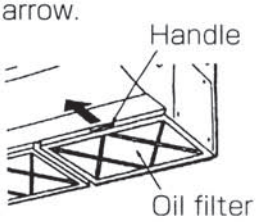

RP71 → 3pieces
RP125 → 4pieces

2) Replacing the filter element

①Remove the oil filter by sliding it in the direction of an arrow.

②Remove the two metal fittings for filter element according to the following procedure. Bend the metal fittings towards ① side(inside) and then slide them in the direction of ② to remove.

③Replace the filter element (disposable).

Note:

Install the filter element within the frame securely.

④Install the metal fittings for filter element in their original positions.

⑤Turn the side of oil filter that the metal fittings are installed downward and install the filter in the unit.

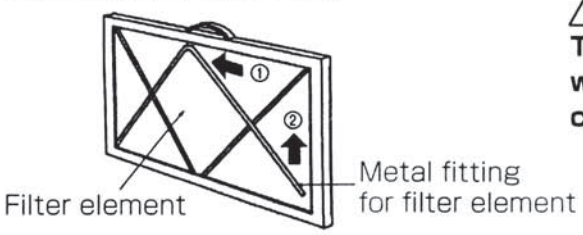

3) Cleaning the frame of the oil filter

Tools to be prepared

- Protective goods such as a rubber glove
- Scrubbing brush or brush

Note:

Avoid using a metal scrubbing brush or brush since the aluminum materials could be damaged.

- Household neutral detergent or alkalescent detergent(for washing dishes or clothes)

Note:

If alkaline detergent is used for cleaning, the part made of aluminum could discolor.

Make sure the filter element is removed when cleaning the oil filter.

①If the filter is not so dirty.(If the filter is cleaned once a week(once per 100 operating hours).)
Wash the filter with water and above-mentioned detergent using a scrubbing brush or brush, etc. (It is more effective to wash the filter with lukewarm water.)

②If the filter is extremely dirty.
Put the previously-mentioned detergent (its strength should be about 1/10 of undi-luted solution)into hot water whose temperature is 50℃ or less, and soak the filter for 1 hour or more before washing.

⚠Warning:

To prevent your hand from burning, start washing the filter after the hot water gets cold.

OPTIONAL PARTS

High efficiency filter element

PAC-SH59KF-E

Photo

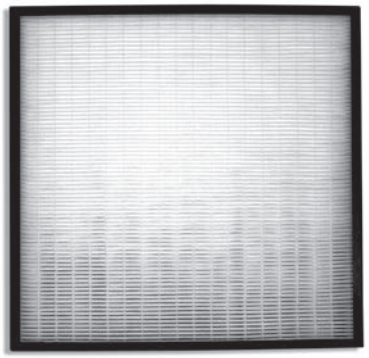

Descriptions

High Efficiency Filter is part that remove dust in air.
PAC-SH53TM-E (multi-function casement) is reguired for installation.

Applicable Models

■ PLA-RP·BA/BA2/BA3

Specifications

Dust collection efficiency	Colorimetric method 65% (JIS 11 class)
Filter element ,aterial	Electrrostatic polyolefin fiber
Life	Approx 2,500 hours (at dust density 0.15 mg/m3) *Reproduction not possible
Parts composition	This element x 1

Dimensions

Unit : mm

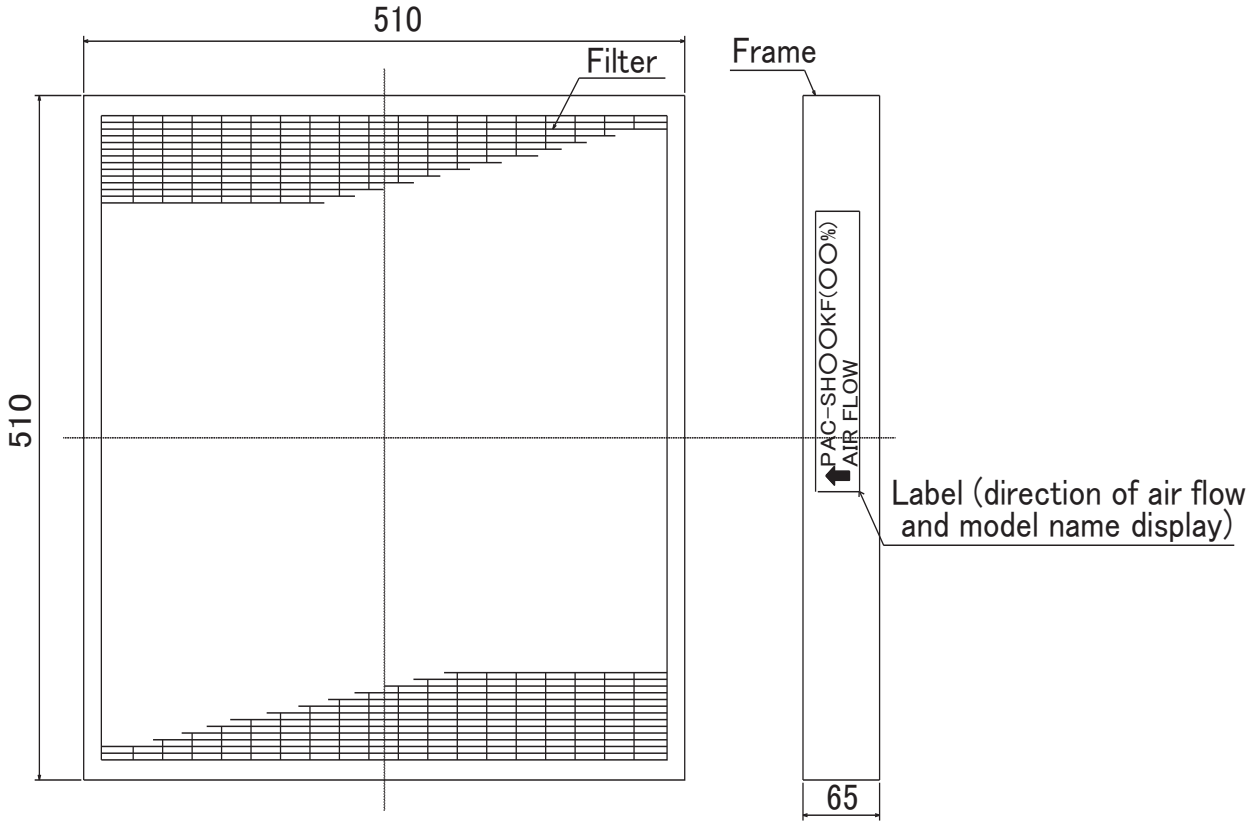

OPTIONAL PARTS

How to Use / How to Install

1 Parts check.

(The unit is provided with this manual and following parts in the box.)

Part #, Name	High-efficiency filter element
Q'ty	1
Figure	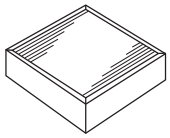

NOTICE

(1) In case that the High-efficiency filter element is installed, it should be installed on the Multi-functional casement which is option.
Be sure to purchase the Multi-functional casement.

2 Installation of High-efficiency filter element (same procedure for replacement)

- Remove the intake grille of the Decorative panel in advance.
  (See the "installation instructions of decoration panel" for details.)
- Loosen the four screws of bracket for installation of the High-efficiency filter element of the Multi-functional casement as shown right. Then, slide them outside.
- Set the High-efficiency filter element in Multi-functional casement, slide the plate inward, and then tighten the four screws securely.

※When the indoor unit is used with "2 ways" air outlet, the High-efficiency filter element is not available.
※When the High-efficiency filter element is installed, the operation noise can be larger.
※When attaching the High-efficiency filter element, check the direction of air flow, referring to the stamp on the side.

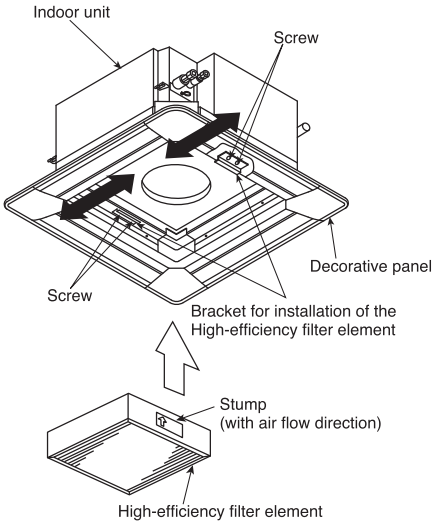

3 Air flow volume setting when High-efficiency filter element is installed

※When the High-efficiency filter element is attached for the first time, the setting for increase in airflow rate must be performed.
※This setting is necessary only when the element is newly attached: No setting is required when the filter is replaced.

⚠CAUTION	Set up for increasing air flow volume
	●If the set up is not done correctly, the air flow volume will decrease and it can lower the performance and cause dew drop.

〈Address board〉

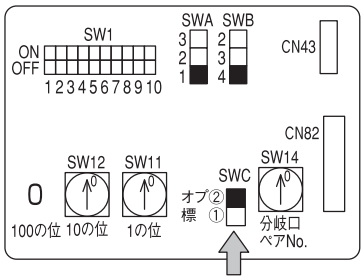

1）If the indoor unit to be combined is BA series:
- Setting must be performed from the remote control: See the pages of "Function Selection" in the installation manual provided with the remote control. (Set optional assembly to "Yes".)

2）If the indoor unit to be combined is other than above:
- Set switch "SWC" on the address board in indoor unit to the "option" ② side ("standard" at the factory).

4 Replacement Period

- The High-efficiency filter element is single-use (not recyclable).
- The reference for operation time is 2,500 hours (depending on the environment in which the air-conditioner is installed).

⚠CAUTION	Do not wash with water.
	●Washing with water will degrade the performance and could cause the element to become unusable.

OPTIONAL PARTS

High Efficiency Filter

PAC-SH88/89/90KF-E

Photo

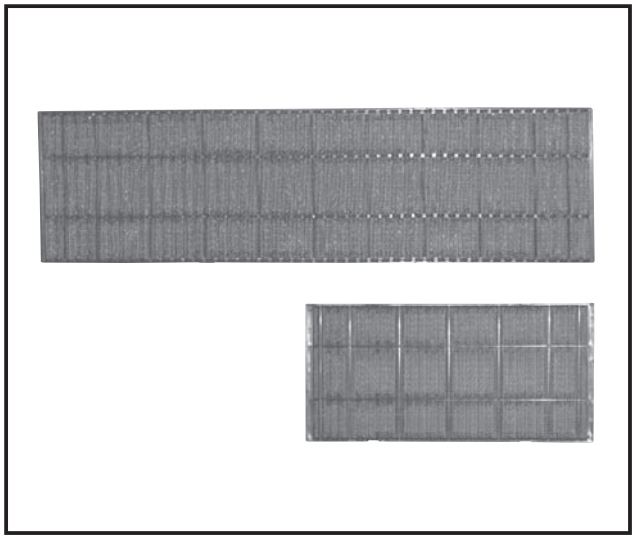

Descriptions

- High Effeciency Filter is part that remove dust in air. Dust collection efficiency:70% (Weighing method)
- It is the best for the air-conditioning of the stove where a lot of going of the person in and out exists.

Applicable Models and Specifications

Model		PAC-SH88KF-E	PAC-SH89KF-E	PAC-SH90KF-E
Dust collection efficiency		70% (weighing method)		
Filter material		PP fiber (antibacterial + mildew-proof), honeycomb weave (Identification: gray yarn woven)		
Maintenance		Approx. 2,500 hours (varies with operating conditions)		
Parts composition	Filter (large)	—	1	2
	Filter (small)	2	1	—
Applicable models		PCA-RP50KA	PCA-RP60,71KA	PCA-RP100,125,140KA

Dimensions

Unit : mm

	A	B
Small	432	425
Large	752	745

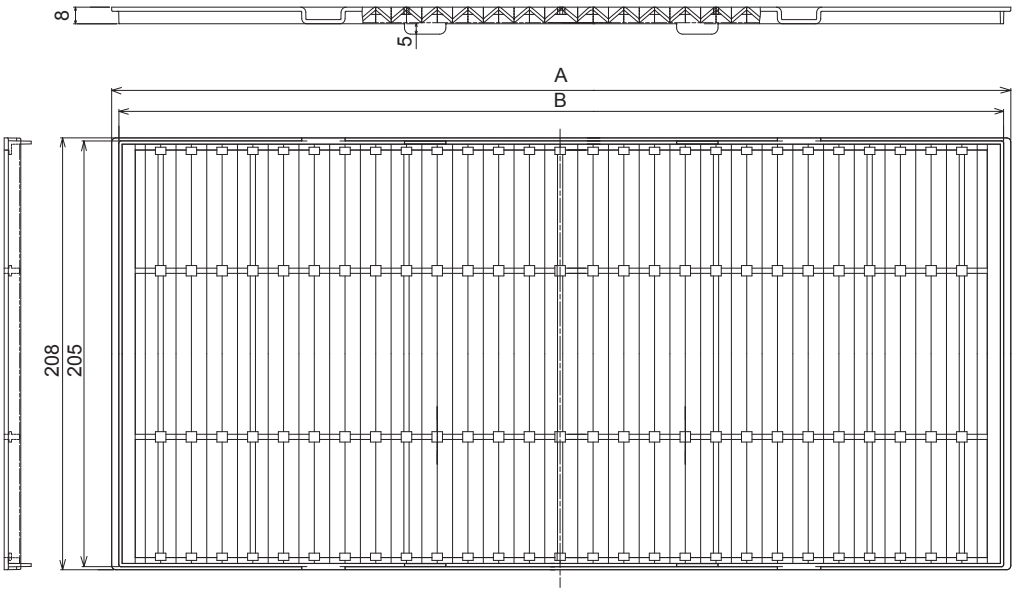

How to Use / How to Install

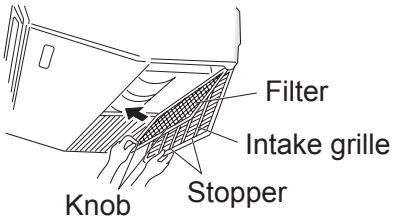

1 Open the intake grille.
2 Hold the knob on the filter then pull the filter up in the direction of an arrow. To replace the high efficiency filter, be sure to insert the filter far enough until it fits into the stopper.

Photo

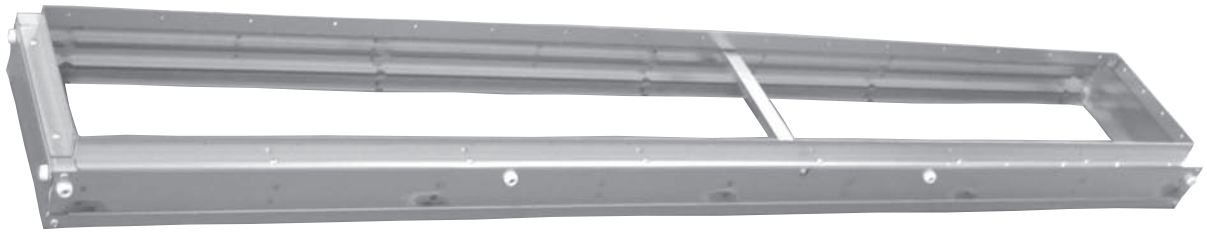

Applicable Models

Model	PAC-KE92TB-E	PAC-KE93TB-E	PAC-KE94TB-E	PAC-KE95TB-E
Applicable models	PEAD-RP35JA(L) PEAD-RP50JA(L)	PEAD-RP60JA(L) PEAD-RP71JA(L)	PEAD-RP100JA(L) PEAD-RP125JA(L)	PEAD-RP140JA(L)

i-see sensor corner panel

PAC-SA1ME-E

Photo

Descriptions

- Both floor and inlet temperatures are measured to provide a comfort sensation fully in a room covering from the ceiling to the floor surfaces.
- Install the I-SEE sensor corner panel to the corner of the decorative panel (the opposite side of refrigerant piping).

Applicable Models

■ PLA-RP·BA/BA2/BA3

Specifications

Adapter wiring	Connect the 9-core cord with connector to the indoor controller board of the indoor unit.
Exterior	ABS resin (Munsell No.6.4Y8.9/0.4)
I-SEE sensor operation	When these is great difference between the room temperature and the set temperature, temperatures of four areas are measured once in two minutes.When the room temperature is stable, the i-see sensor rotates.

Dimensions

Unit : mm

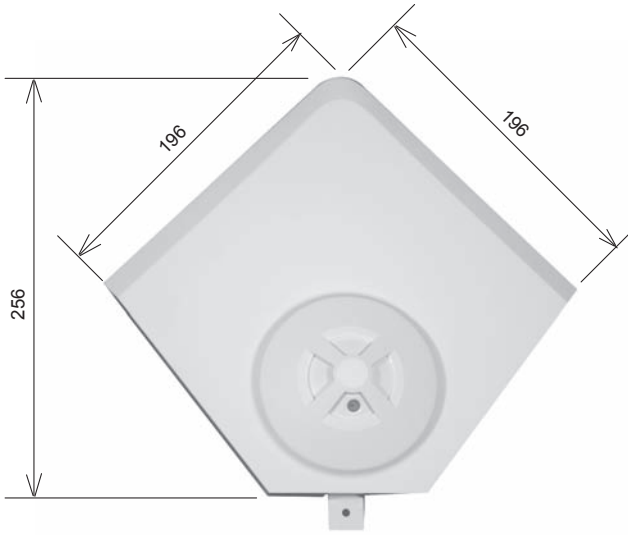

OPTIONAL PARTS

How to Use / How to Install

1. Included parts (This manual and following parts are included.)

Part Number/ Name	① i-see sensor corner panel	② Plastic fastener
Quantity	1	2
Shapes/ Sizes		

2. Preparation before installing the decorative panel

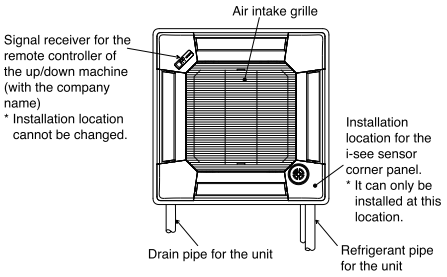

⚠ Warning **Turn off the main power.**
- **If the main power is not turned off, injury or electric shock may result.**

Removing the corner panel

- It can only be installed at this location with corner panel.
  * If the corner panel with sensor is removed, a problem may occur when installing the decorative panel.
- Remove the screw on the corner, slide the panel in the direction of the arrow (1) in the figure and remove the corner panel.

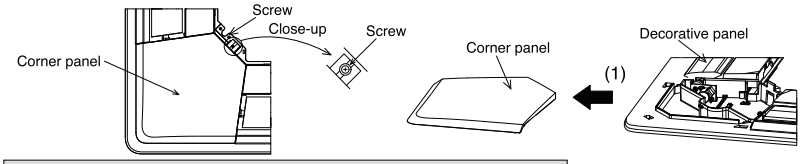

3. Installation of corner panels and air intake grille

* You can set the direction of the air intake grille such as grids when installing multiple units as desired. If forced to be set at other than the position shown in the figure, failure may result.

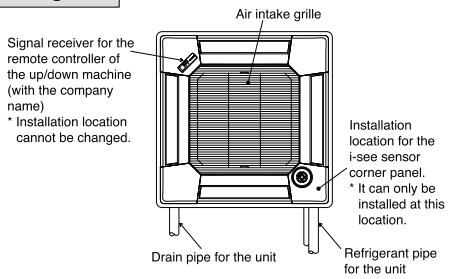

Installation of i-see sensor corner panel

Optional part: PAC-SA1ME-E
- Take CN4Y (white) and CN6Y (red), lead wires of the i-see sensor corner panel ① from the side of the electric box on the unit and make sure to connect them to the connector of the control board.
- Lead wires of the i-see sensor corner panel ① should be fixed at the rib of the decorative panel with the plastic fastener ② so that there is no slack.
- Lead wires should be held together with the lead wires of the unit and fixed with two of the plastic fastener ② so that there is no slack.
- Put the cover back on the electric box with three screws.

* Make sure wires are not caught in the cover of electric box. If they get caught, they will be cut off.
- Adverse procedure of "Preparation before installing the decorative panel" in the Section 2 will be taken for installing the i-see sensor corner panels.

* The i-see sensor corner panel should be fixed onto the decorative panel with screw.

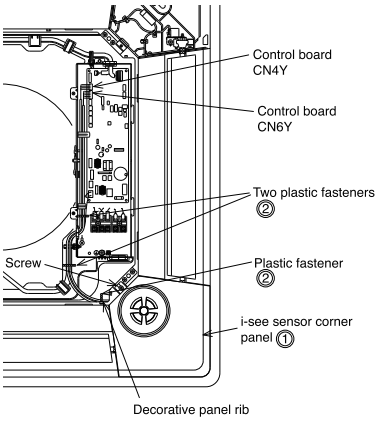

4. Verification

- For optional part PAC-SA1ME-E, check the rotating movement of the i-see sensor. If the i-see sensor does not rotate, review the procedure in "installation of i-see sensor corner panel" in section 3.

After verifying all the items above, hand all the documents including this manual and the manuals for the unit and separately sold parts to the user. Be sure to explain the descriptions of cleaning the filters and how to use the air intake grille up/down function (remote controller operation) in the operation manual of the decorative panel to the user.

Air outlet shutter panel

PAC-SH51SP-E

Photo

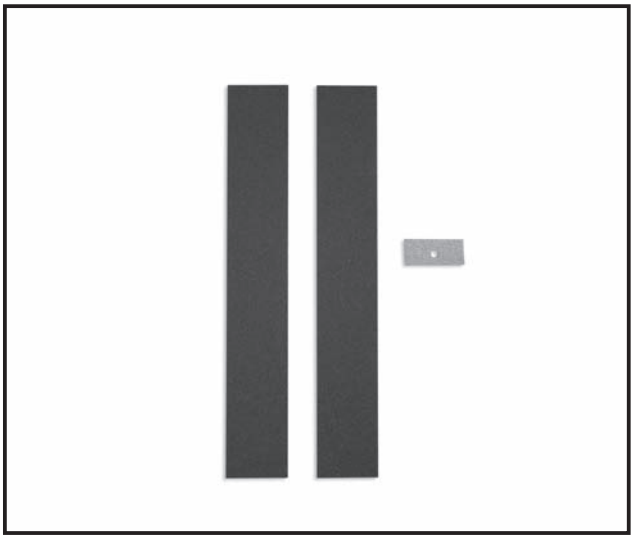

Descriptions

Part to block the air outlet of a cassette-type indoor unit.

Applicable Models

■ PLA-RP·BA/BA2/BA3

Specifications

Air outlet pattern	Number of shutter plates 4 directions → 3 directions: 1 4 directions → 2 directions: 2 (Change to 1 direction is not possible.) Note 1: Selecting "2 directions" requires cleaning of the filter approximately once. (Filter clogging may cause cooling/heating performance to drop.) Note 2: Selecting "3 directions" or "2 directions" may increase operating sound. Note 3: "2 directions" should not be selected when operating in high-temperature/high-humidity environment. (Dew formation or dewdrop may result.)
Material	Foamed polyethylene + Foamed urethane
Color	Black
Installation method	Glued to the air outlet of the indoor unit.

Dimensions

Unit : mm

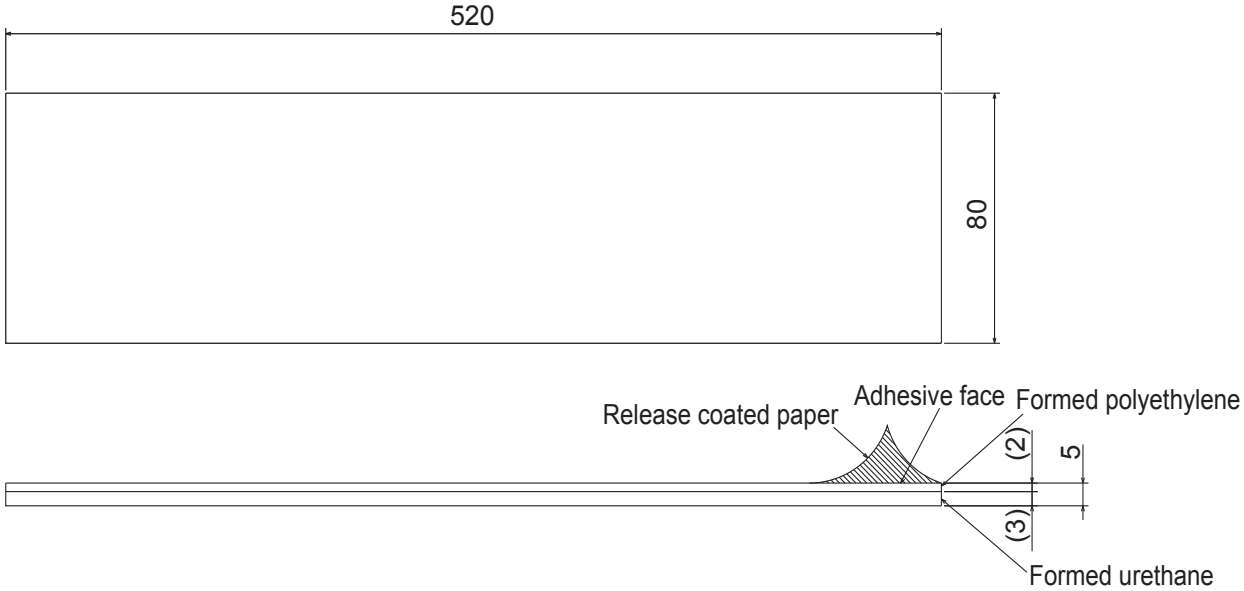

OPTIONAL PARTS

How to Use / How to Install

Checking for provided parts

Make sure that the parts shown on the right are in this bag, along with the instruction sheet.

Part No., Name	①Shutter plate	②Insulator
Q'ty	2	1
Figure	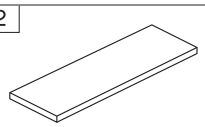	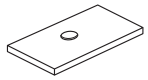

Air-outlet shutter plate Installation Manual

1. Locate the Shutter Plate installation position

●This is a part which is used to convert the number of air-outlet from "4 ways" to "3 ways" or "2 ways".
(Convert to "1 way" is not available.)

●Select the outlet direction and decide the outlet to be closed (Indoor unit).

※When the number of outlet is selected to "2 ways", be sure to explain to the customer that the filter should be cleaned once a month. (Otherwise, the filter will be clogged, and the performance of the cooling and heating can be lower.)

※When the number of outlet is selected to "3 ways" or "2 ways", the operation noise can be larger.

※Never to select "2 ways" in the environment of high temperature and high humidity. (It can cause dew.)

2. Installation of shutter plate (fig.1)

●Install the shutter plate to the indoor unit so that it can fit the air-outlet concave portion.

※Install one piece of shutter plate per one air-outlet.

※The installation should be done before the decorative panel is installed.

※The shutter plate must be installed not to cause wrinkle or gap. (It can cause dew drops.)

※When attaching the duct flange to the blow outlet (marked *) between the refrigerant pipe and drain pipe, cut off the shutter plate at the slip portion of release paper, and then attach it.

3. Function selection

●When the number of air-outlet is changed, it is necessary to make function selection. For the selection method, refer to the manual for installation of the indoor unit.

4. Setting of the auto vane (fig.2)

●It is possible to fix the auto vane of the decorative panel to the totally closed position, which is applied to the air-outlet installed on the shutter plate.
Once the auto vane is fixed, the operation of a remote control and all of automatic control will not be available. Also, the LCD of the remote control will not work.

fig.1

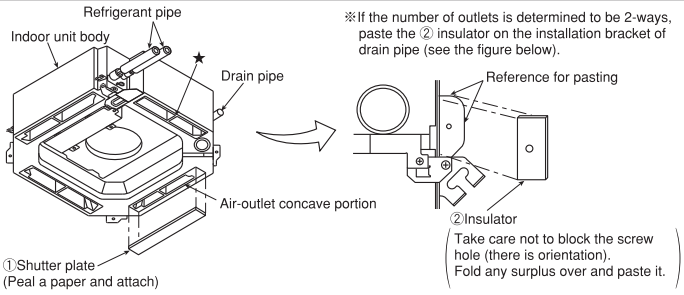

fig.2

1) Shut the main power (circuit breaker) off.

⚠Warning	Shut the main power off.
	●The fan of the unit will run, which can cause accident or electric shock.

2) Disconnect a connector of the vane motor of the decorative panel which is applied the air-outlet installed on the shutter plate.
(Disconnect the connector to arrow direction with keep depressing the lock release button as shown below.)
Insulate the connector which was disconnected with an electric tape.

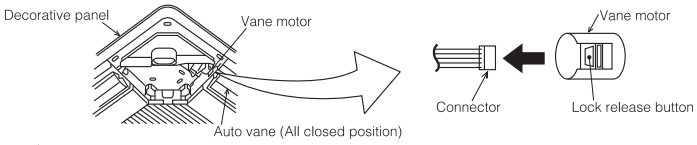

3) Move the auto vane of the air-outlet which is equipped with the shutter plate slowly by manual and bring it to totally closed position.

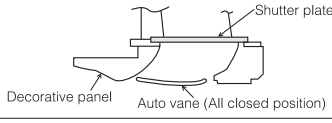

⚠Caution	Do not totally close the vertical air flow control vane of the air-outlet which is not equipped with the shutter plate.
	●The dew or dew drop can be caused, and the unit cannot work correctly.

OPTIONAL PARTS

Multi-functional casement

PAC-SH53TM-E

Photo

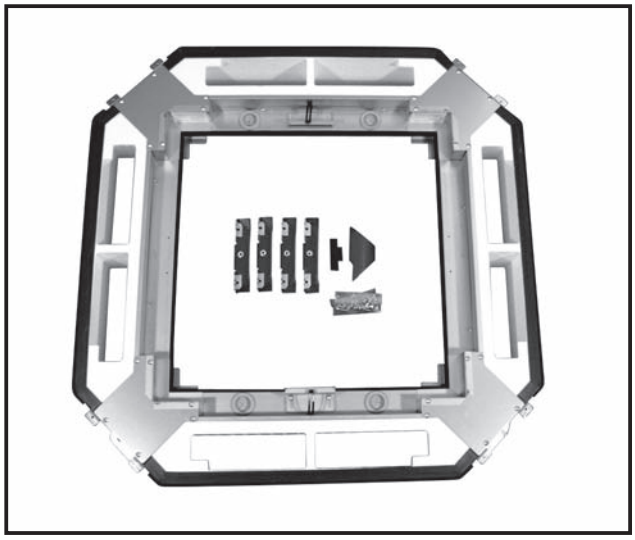

Descriptions

A part reguired installation of a high-efficiency filter element.
Can also beused for introducing fresh air from outdoor.

Applicable Models

■ PLA-RP·BA/BA2/BA3

Specifications

Connected duct diameter (mm)		
Fresh air intake	Number of intakes	Any 2 corners or less (among four corners)
	Input volume	20% or less of indoor units air volume
High-performance filter element		Colorimetric method (65%)

Dimensions

Unit : mm

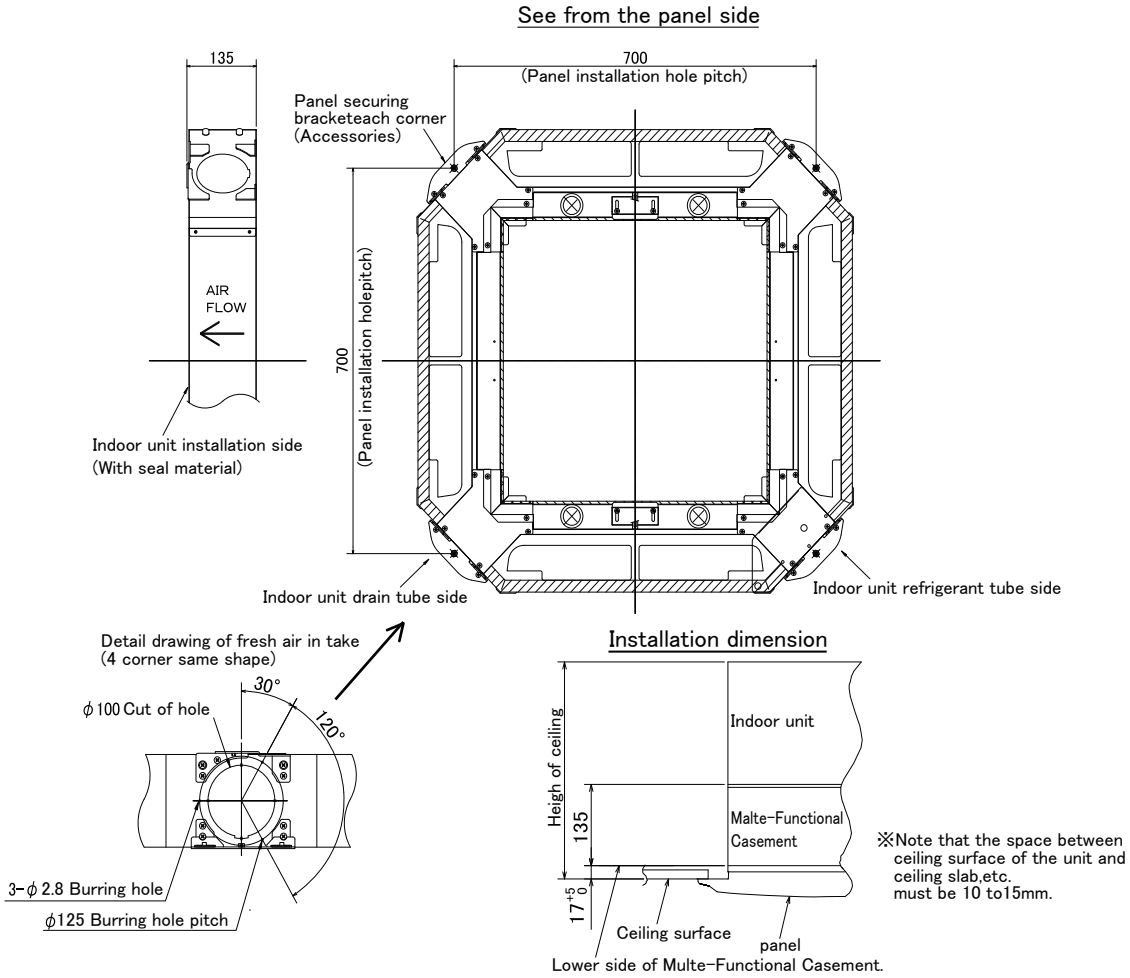

OPTIONAL PARTS

How to Use / How to Install

1 Parts check.

(The unit is provided with this manual and following parts in the box.)

MULTI-FUNCTIONAL CASEMENT

Part No. / Name	① Multi-functional casement	② Screw with washer (black)	③ Screw	④ Decorative panel securing bracket	⑤ Insulator A for Decorative panel	⑥ Insulator B for Decorative panel
Q'ty	1	4 M5×0.8×25	8 M5×0.8×12	4 With insulator	1	1
Figure	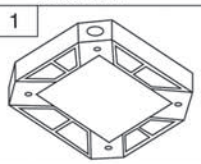			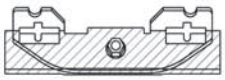	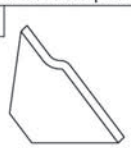	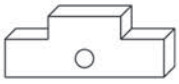

NOTICE

(1) When taking in external air, use the PAC-SH65OF-E duct flange (optional) and duct (to be procured at local site).
※It is available of fresh-air intake even when the High-efficiency filter element is installed.

(2) Follow the procedure in this manual for installation of the Multi-functional casement ① .
Otherwise, it is possible that installation of refrigerant tubes, drain tubes, and electrical wiring will not be available.

2 Installation of Indoor unit.

●Follow the description in the installation manual which is attached to the indoor unit.

3 Installation of Multi-functional casement.

Preparation before installation

●If it is necessary to change the number of air outlet, the optional parts Air Outlet Shutter Plate should be installed on the indoor unit.
Therefore, the installation should be done before the Multi-functional casement ① is installed on the indoor unit.

●The Multi-functional casement ① has four knockout on each side so that the air can be taken from any of four sides.
Select any one or two sides in advance and make knockout holes on the Multi-functional casement ① .

—Knockout hole position for fresh-air intake.—

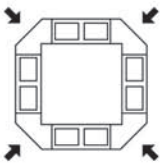

— Making knockout holes —

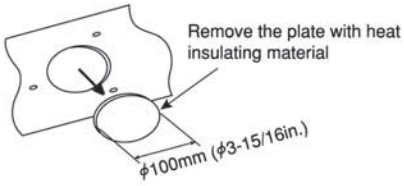

●Be sure to use the PAC-SH65OF-E (optional) for duct flange.

OPTIONAL PARTS

3 Installation of Multi-functional casement.

Wiring indoor unit

●Be sure to do the wiring (indoor/outdoor connection cables, remote control cable, etc.) before attaching the Multi-functional casement:
※Wiring after attaching the Multi-functional casement will be difficult.

Hand tightening

※Be sure to use two persons for this work.

●Fix the two screw with washer (black) ② to each position. (drain tube corner position and to its opposite angle).
●Hook the hole of the Multi-functional casement ① to the screw with washer (black) ② and hand tight.

Fixing

●Temporarily secure the two screws with washers ②, and also the other two screws with washers ②, and then tighten these screws with washers ② after making sure that the position of Multi-functional casement ① is correct.

⚠Caution	Temporarily secure the four screws with washers.
	●Tightening the screws without temporarily securing them could damage the screws with washers, or cause air leak.

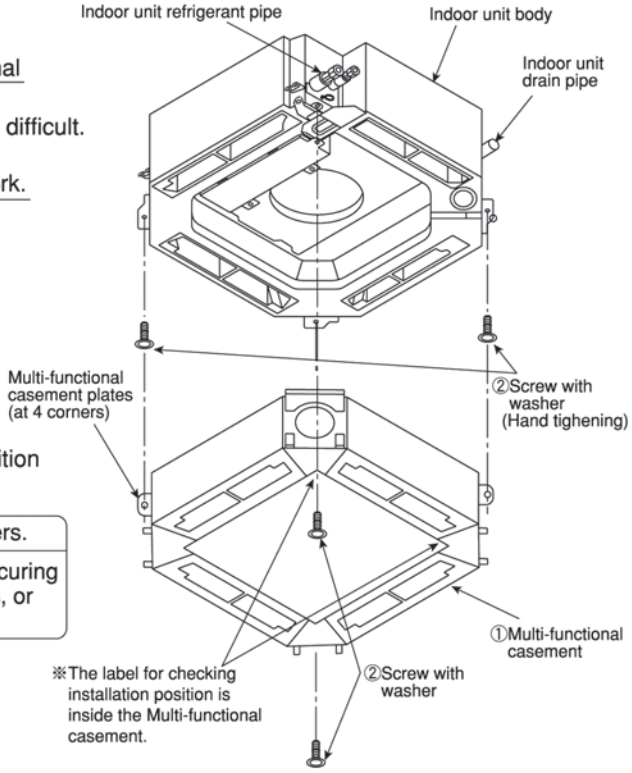

Attaching bracket for securing decorative panel

●Use eight screws ③ to secure the four brackets for securing decorative panel ④ to each corner of Multi-functional casement ①. (See the figure below.)

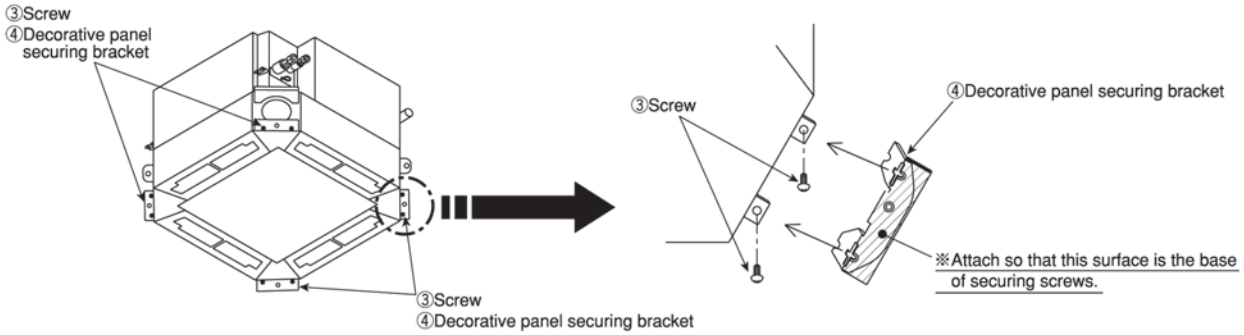

Height adjustment

※It is recommended to make this adjustment before installation of duct when fresh air intake.

●Readjust the height of the Multi-functional casement ① with the gauge which is attached to the decorative panel as show right.

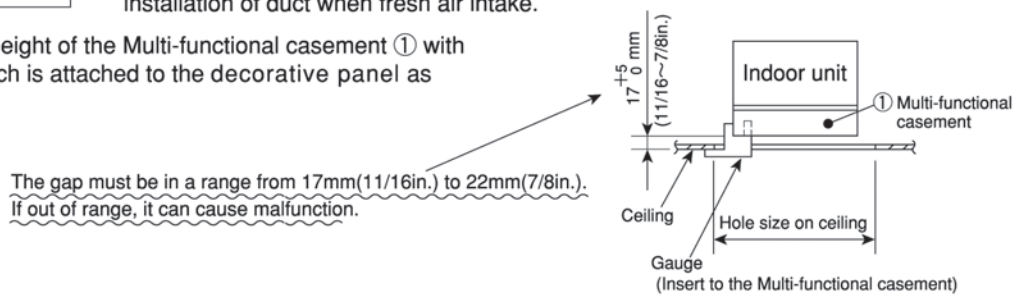

OPTIONAL PARTS

4 Installation of duct (in case of fresh air intake)

Installation of duct flange

●Install the optional duct flange referring to the installation manual provided with it.

⚠Caution	Linkage of duct fan and air conditioner
	●In case that a duct fan is used, be sure to make it linked with the air conditioner when outside air is taken. Do not run the duct fan only. It can cause dew drop.

—— Details of air inlet (Example) ——

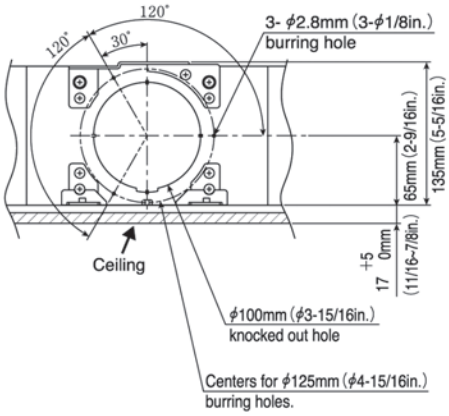

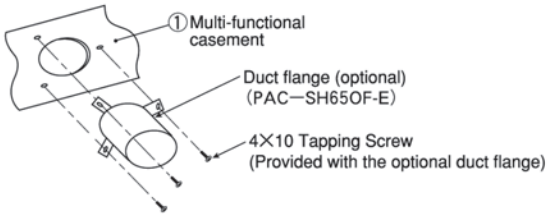

Installation of duct (should be prepared locally)

●Prepare a duct of which inner diameter fits into the outer diameter of the duct flange.
●In case that the environment above the ceiling is high temperature and high humidity, wrap the duct in a heat insulator to avoid causing dew drop on the wall.

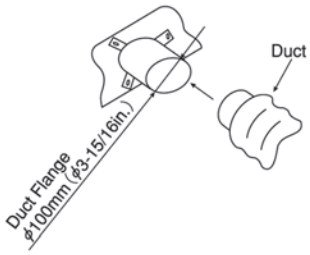

5 Installation of Decorative panel

Preparation for installation

●Paste insulator A ⑤ and insulator B ⑥ on the Decorative panel as shown in the figure.
See the installation manual provided with the Decorative panel for how to remove the corner panel, etc.

⚠Caution	Paste insulators on Decorative panel.
	●Be sure to paste on insulators A and B: Operation without pasting the insulators could cause dripping of water.

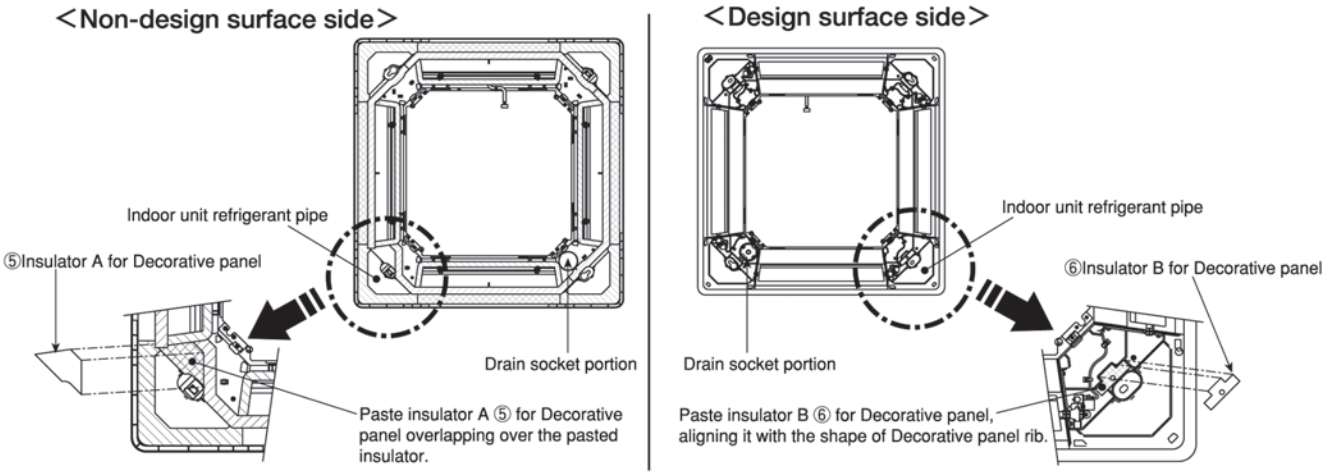

OPTIONAL PARTS

5 Installation of Decorative panel

Attaching Decorative panel

- Attach the Decorative panel, referring to the installation manual provided with the Decorative panel.
  ※Be sure to align the drain socket of Decorative panel with the drain pipe of indoor unit for attachment: Improper attachment could cause dripping of water.

- Connect the leads of Decorative panel and optional Signal receiver to the indoor unit through the bush of Multi-functional casement.

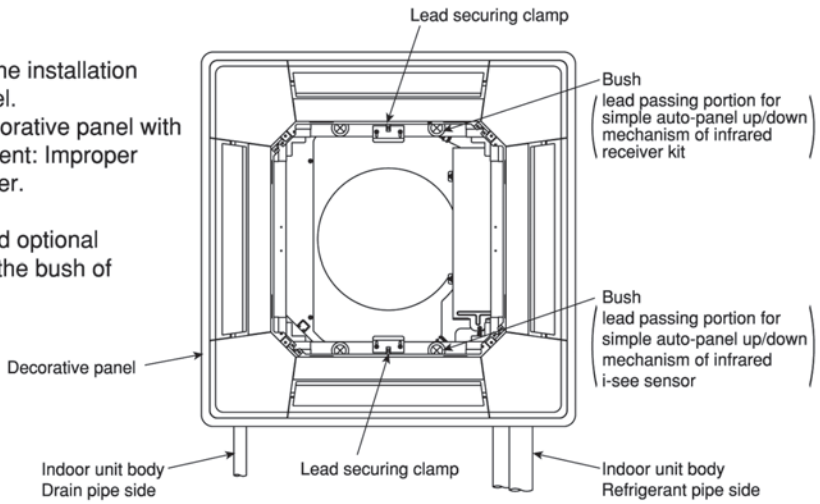

OPTIONAL PARTS

Duct flange for fresh air intake PAC-SH65OF-E

Photo

Descriptions

Part to attach aduct to take in fresh air from outdoors.

Applicable Models

■ PLA-RP•BA/BA2/BA3

Specifications

Connection duct diameter (mm)	Φ200
Material	Hot-dip zinc-coated carbon steel sheet (t0.8)
Accessory	Insulator Fixing screw (ST4x10)x3

Dimensions

Unit : mm

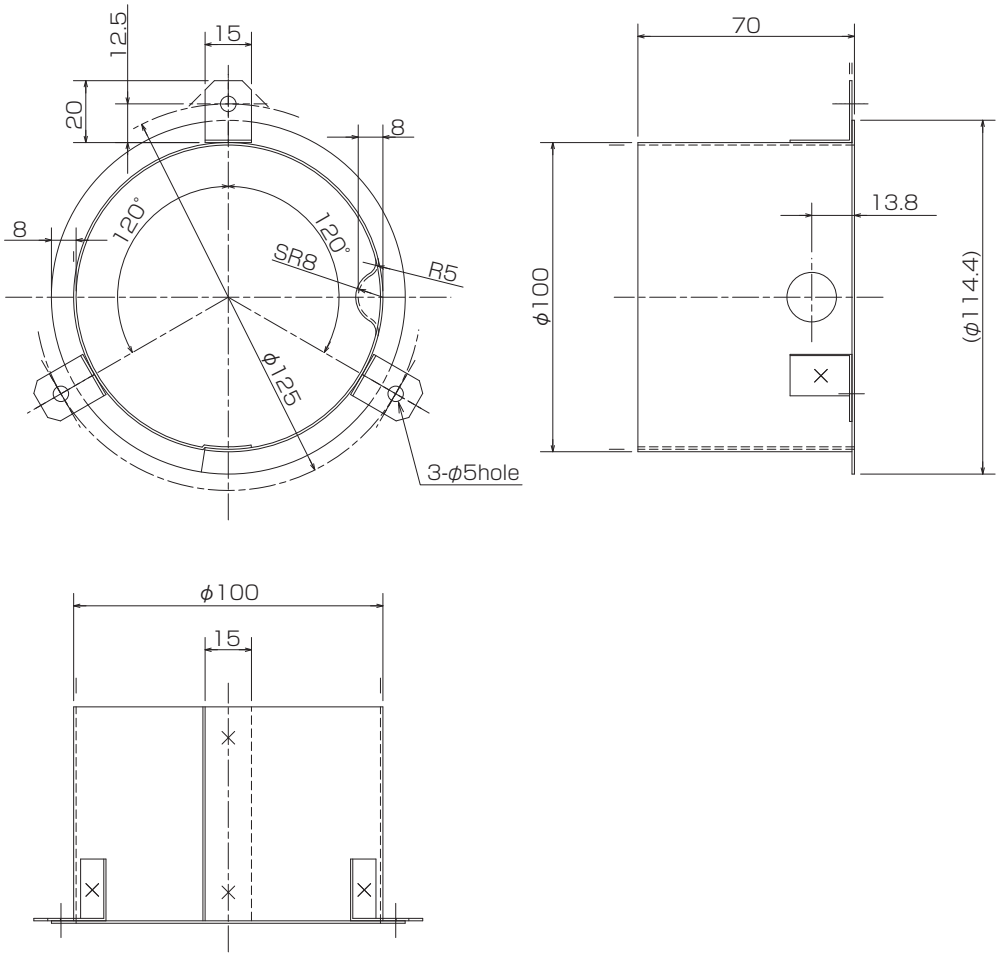

OPTIONAL PARTS

How to Use / How to Install

1. Checking Parts

(This box contains the instruction sheet and the following parts)

Part	①Duct flange	②Insulator	③Screws(M4×10)
Qty	1	1	3
Shape			

2. Attaching Duct Flange for External Air Input

1) Punch an opening for the duct flange.
〈When attaching to indoor unit〉
- Cut the slit of the ϕ100 cut-out hole to which the duct flange is to be attached.
- Cut out enough internal polystyrene foam to match the ϕ100 hole. (Remove the cut powder completely: Neglecting this could cause a fault.)

〈When attaching to multi-functional casement〉
- Remove the ϕ100 knockout hole to which the duct flange is to be attached.

2) Paste insulator ② on the duct flange ① (see the figure on the right).
3) Use three screws ③ to attach duct flange ① (see the figure below).
※When attaching to the indoor unit, be sure to remove the insulator that is pasted on the location of indoor unit (shown in the figure below).
※When attaching to multi-functional casement, be sure to set the concave portion of duct flange ① toward the panel attachment surface when attaching it. (If the duct flange is attached to a location other than the specified one, the decoration panel cannot be attached.)

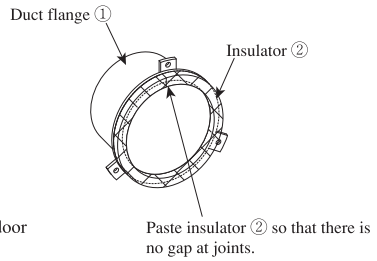

When attaching to indoor unit

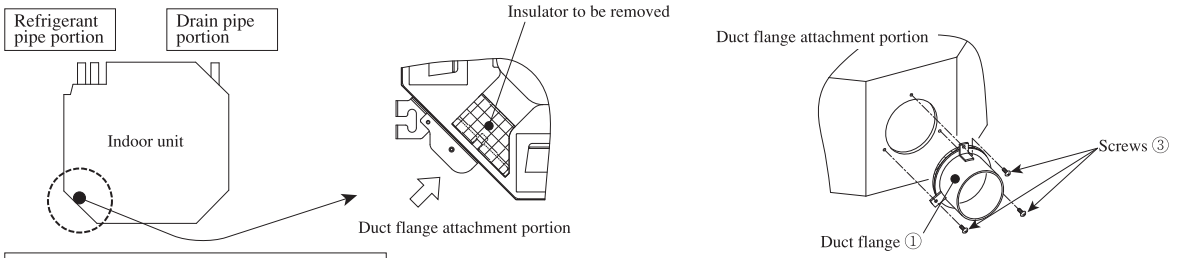

When attaching to multi-functional casement

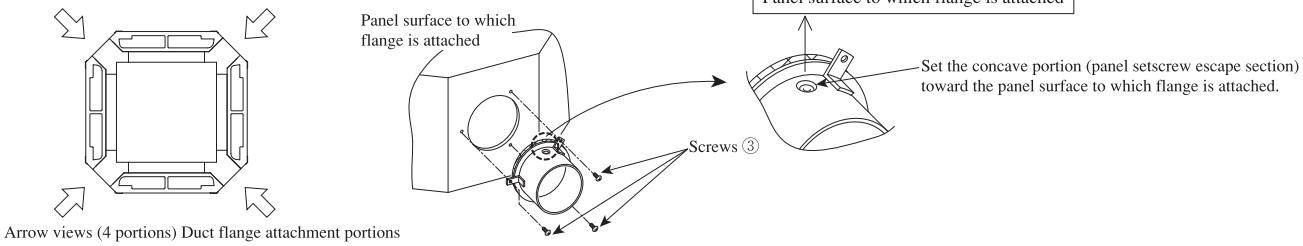

OPTIONAL PARTS

Duct Flange for Fresh Air

PAC-SF280F-E

Photo

Descriptions

Part to attach a duct to take in fresh air from outdoors.

Applicable Models

- PCA-RP71HA
- PCA-RP125HA

Specifications

Connecting duct diameter (mm)	200
Material	Hot-dip zinc-coated carbon steel sheet (t0.8)
Accessory	Fixing screw (ST4x10) x 4

Dimensions

Unit : mm

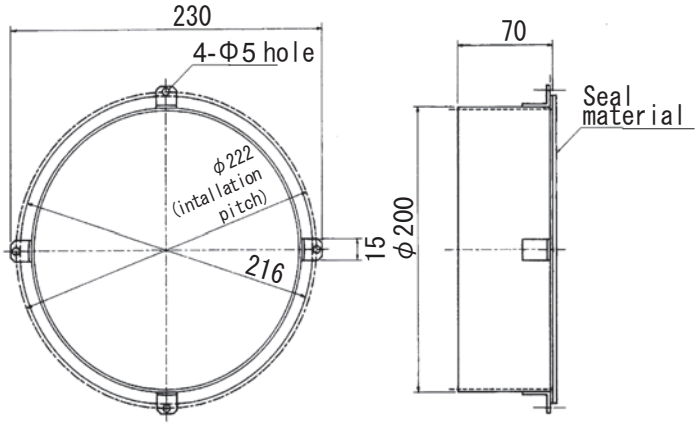

How to Use / How to Install

1. Checking Provided Parts

※Make sure that you have all the following parts before installation:

①Duct flange	②Tapping screws (4x10)
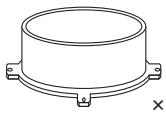 ×1	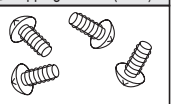 ×4

2. Duct Flange Installation Procedure

1. Punch out the knockout opening for installing duct on indoor unit.
2. Use the provided tapping screws ② to secure duct flange ①.

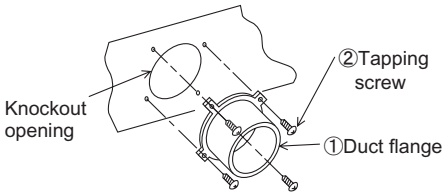

3. Duct Installation Procedure

1. Securely fix the duct (with inner diameter 200 mm) procured at local site to the duct flange, using screws or band.

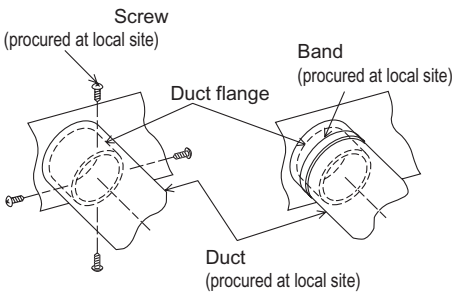

OPTIONAL PARTS

Space panel

PAC-SH48AS-E

Photo

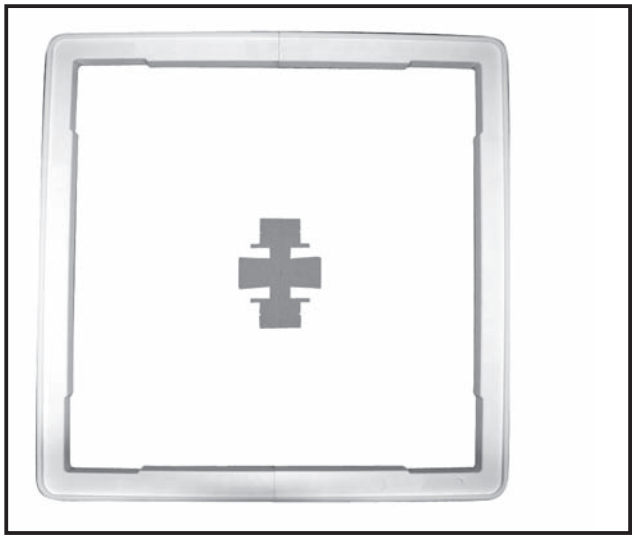

Descriptions

Enables to install cassete-type indoor units even if the ceiling height is low.
A part to the panel 40 milimeters lower than the ceiling surface.

Applicable Models

■ PLA-RP·BA/BA2/BA3

Specifications

Exterior	Color (Mansell No.)	Pure White (6.4Y 8.9/0.4)
	Surface treatment	Coating
	Material	Styrofoam

Dimensions

Unit : mm

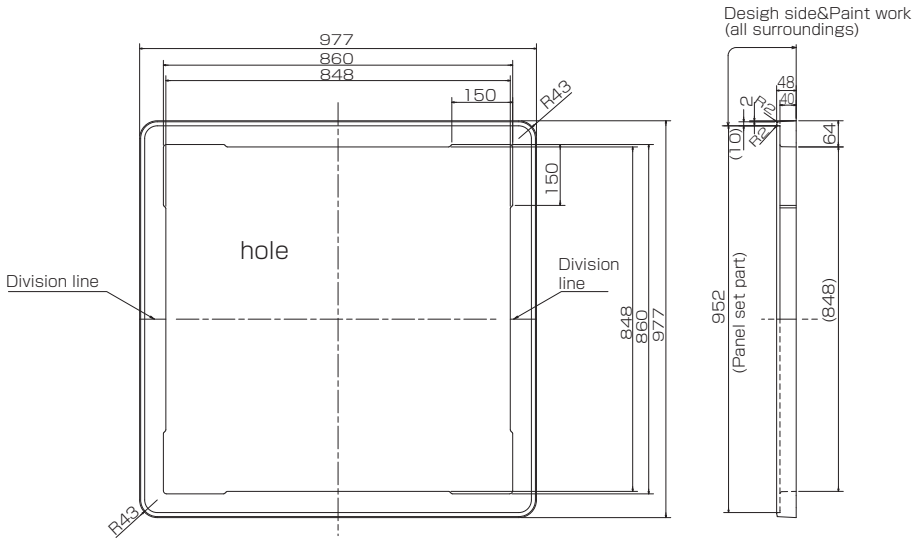

Installation dimension

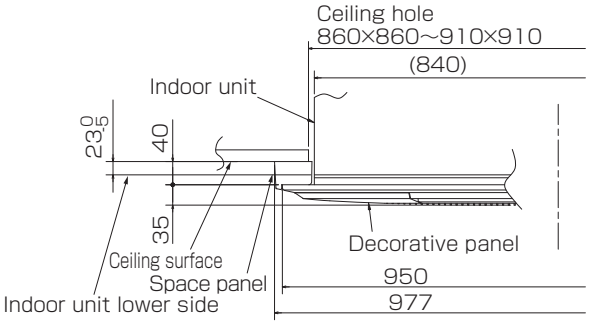

OPTIONAL PARTS

How to Use / How to Install

1. Checking packed parts

Make sure that you have all the following parts, in addition to this manual in this box:

Part No. /Part name	① Space panel	② Gauge for installation
Quantity	2	1 (Split this into four pieces)
Shape	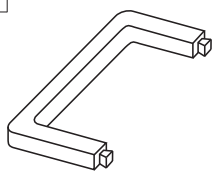	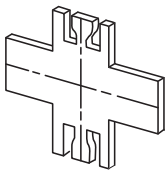

2. Installing space panel

●Install before installing decorative panel.
●This space panel is to be installed on decorative panel before installing on unit body.
(If decorative panel has already been installed, remove it.)

Preparation for installation

(1) Checking size of opening in ceiling

●Make sure that opening in ceiling is within the range shown below:
860×860～910×910

(2) Positioning of ceiling surface and unit body

●Divide the provided gauge for installation ② into four parts, and insert it into the unit or outlet of Multi-functional casement. Place the unit in the center of opening in ceiling, referring to the figure below.

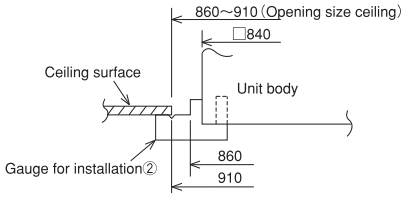

●Using provided gauge for installation ②, position the ceiling surface and unit body.
If position of ceiling surface and unit body does not match, it may result in leak of draft, drip of dewdrops and incorrect operation of horizontal vane of decorative panel, etc.

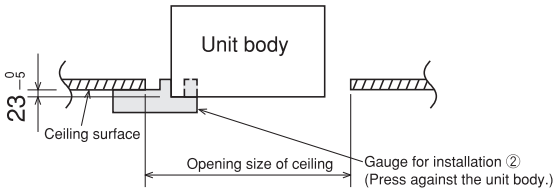

Setting the decorative panel and space panel

●Place the space panel ① (two locations), matching the flange section of decorative panel, and assemble space panel ① on the decorative panel and then set them.
※Be sure to assemble space panel ① on the decorative panel:
If assembled incorrectly, space panel ① may break.

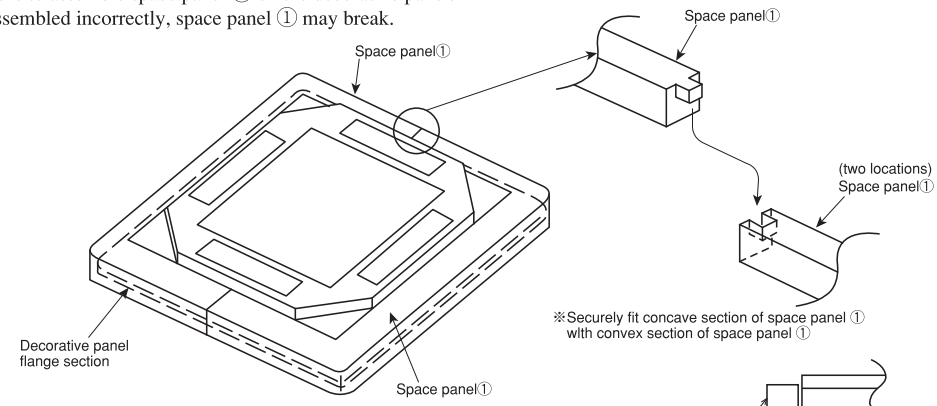

Installing on the unit body

●The procedures are the same as those for decorative panel.
Install the assembled set, referring to the installation manual for decorative panel.

OPTIONAL PARTS

Quick Clean Kit

MAC-093SS-E

Photo

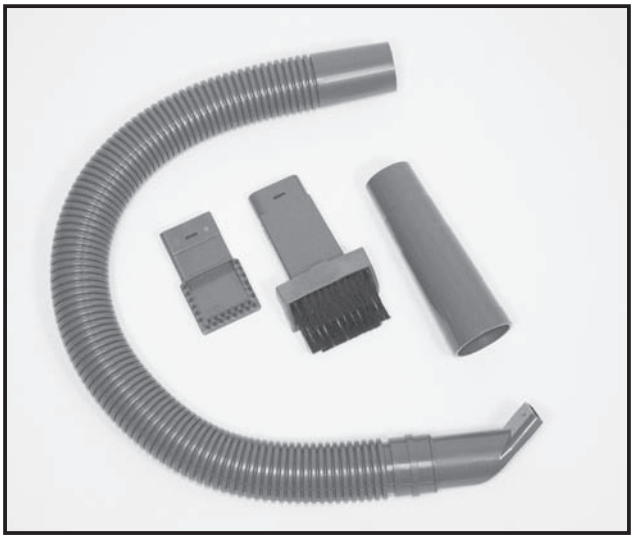

Descriptions

Quick Clean Kit can be easily connected to a household vacuum cleaner for quick, convenient cleaning of the units* .

** It is highly recommended to wear rubber gloves when cleaning the heat exchanger. Touching the heat exchanger with the bare hands can cause injury.*

Applicable Models

- MSZ-FD25VA(S)
- MSZ-FD35VA(S)
- MSZ-FD50VA(S)
- MSZ-GE22VA
- MSZ-GE25VA
- MSZ-GE35VA
- MSZ-GE42VA
- MSZ-GE50VA

Specifications

Material	HEAD ASSY : ABS + nylon HOSE ASSY : ABS + PE	HEAD-2 ASSY : ABS + Plasticized PVC + nylon HOSE ASSY : ABS
Color	HEAD ASSY : gray + black HOSE ASSY : gray	HEAD-2 ASSY : gray + black HOSE ASSY : gray

Dimensions

Unit : mm

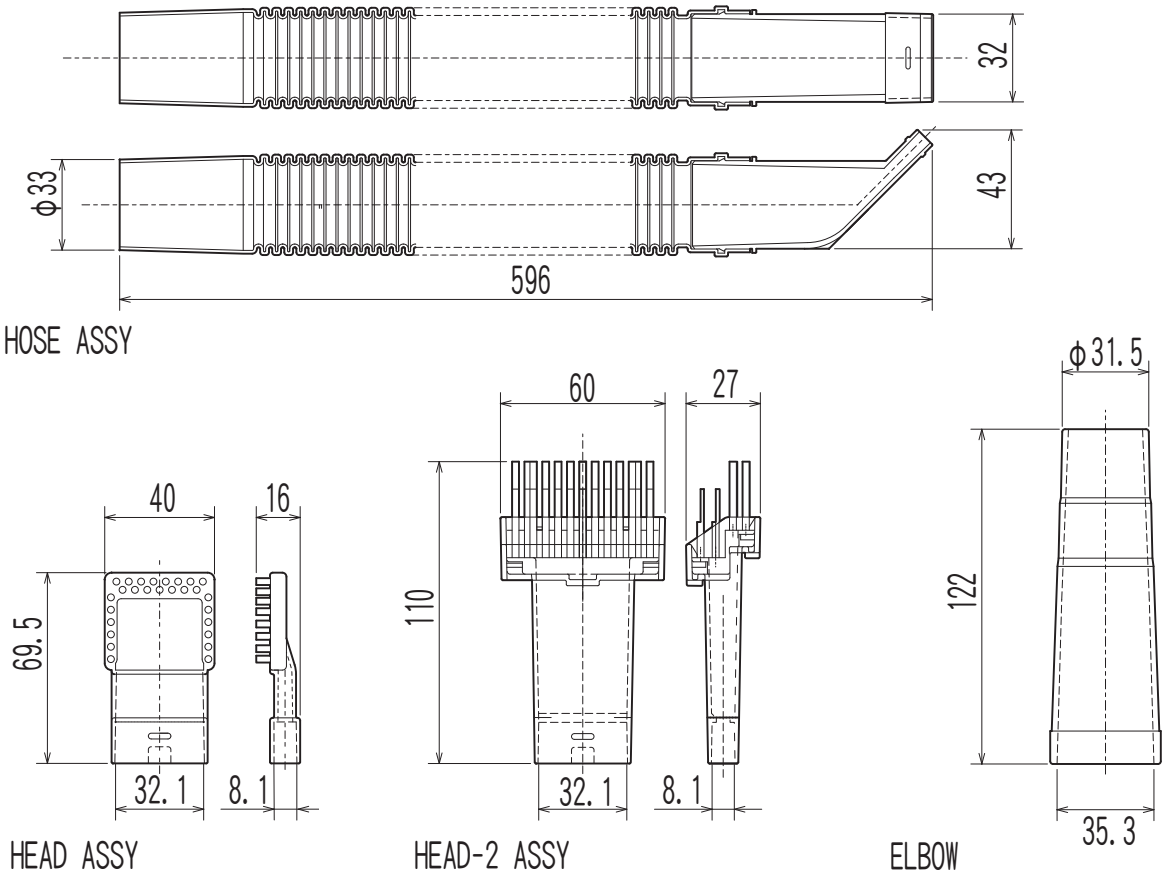

OPTIONAL PARTS

How to Use / How to Install

CLEANING USES

■ Front panel access models

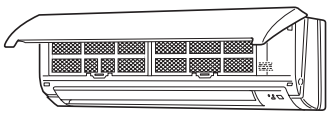

The heat exchanger can be cleaned.

■ Quick-clean models

Example: Access to the fan is possible.

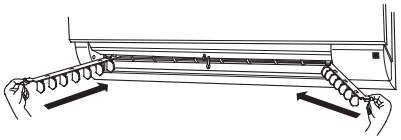

The fan can be cleaned.

CLEANING METHODS

Only available for the hose diameter of vacuum cleaner : 32 - 39 mm (inside diameter).

1.Before cleaning

Before cleaning the air conditioner, switch it off and turn off the breaker and/or remove the power supply plug to ensure safety.

2.Conection with a vacuum cleaner

- Insert the end of the connection hose into one of the special-made brushes.
  Use the special-made brush (large) for overall cleaning and use the special-made brush (small) to access narrow spaces.
- While twisting the connection hose, insert it securely into the vacuum cleaner tube.
  Use the universal adapter if necessary.

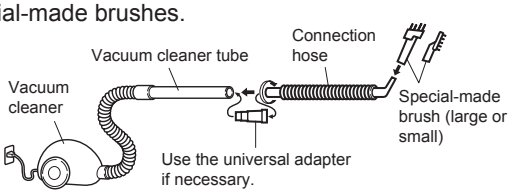

2.Cleaning of the heat exchanger

- Let the heat exchanger dry completely before cleaning it.
  (If the heat exchanger is wet, you may not be able to vacuum up the dust.)
- Open the front panel and remove the air filter to expose the heat exchanger.
  Do not touch the heat exchanger directly with your bare hands; injury may result. Wear a pair of gloves to protect your hands.
- Clean the heat exchanger vertically, moving the brush along the fins of the heat exchanger. (The heat exchanger may be damaged if it is cleaned horizontally.)
  Use the special-made brush (small) to clean the hard to reach, narrow spaces such as the top and bottom of the heat exchanger.

With the special-made brush (large)

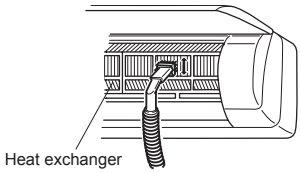

With the special-made brush (small)

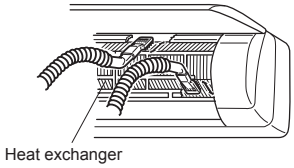

3.Cleaning of the fan

- Remove the horizontal vane and swing out the vertical vane. Clean the fan horizontally, moving the brush along the blades of the fan.
  (Please refer to the operating instructions about the way to remove the horizontal vane and swing out the vertical vane.)

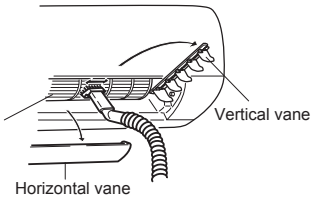

CAUTION:

- Some vacuume cleaners are equipped for overload protection devices, which might work if the airflow thought the vaccume cleaner hose is restricted. In that case, use them at the low power setting.
- If the special-made brushes become dirty, wash them with water and let them dry completely out of direct sunlight.
- When cleaning the air conditioner, do not stand on an unstable bench or chair. This may cause an injury, etc., if you fall down.
- Please refer to the operating instructions of the airconditioner for more details.

Photo

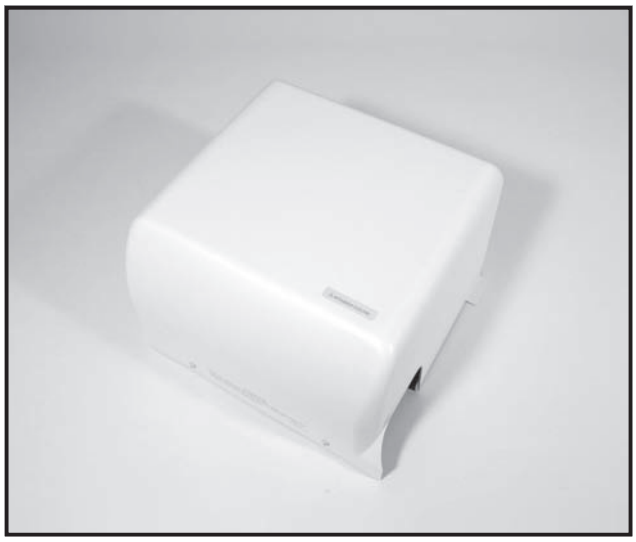

Descriptions

Raises drain generated during unit's operation to seure the appropriate angle of the drain pipe.

Applicable Models

- PKA-RP60KAL
- PKA-RP71KAL
- PKA-RP100KAL

Specifications

Rated voltage	220-240V 50Hz / 60Hz
Power cunsumption	12 / 10.8W
Operating current	0.114 / 0.092A
Discharge lift	Max. 500mm from drain pump's top surface
Discharge rate	24 ℓ /h or more
External dimensions (mm)	300 (H) x 300 (W) x 187 (D)
Exterior	Cover : ABS resin (Munsell 6.4Y 8.9/0.4)
Driving motor	Single, shading type (Class E insulation)
Drain piping	Connected to drain outlet. PVC pipe VP-20 (O.D.26) can be used

Dimensions

Unit : mm

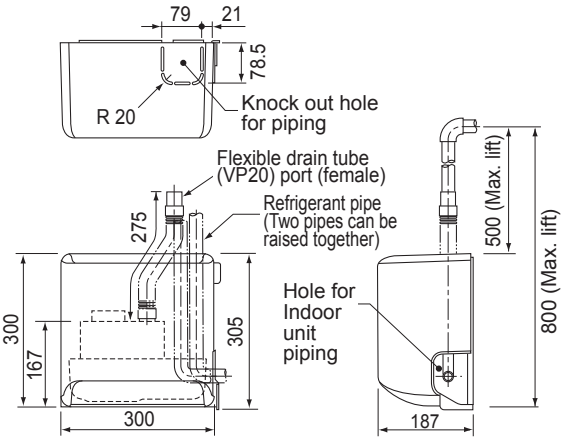

Dimension of Mounting plate

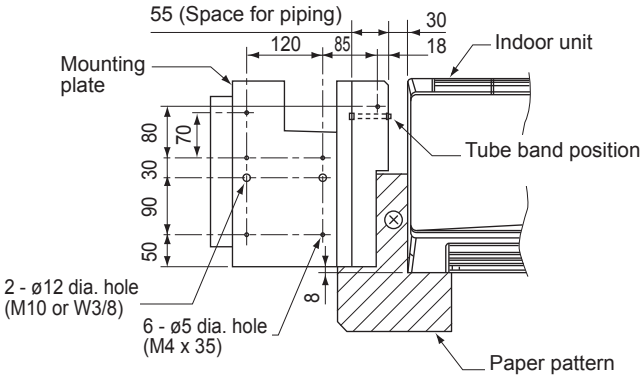

Required space for installation of Drain Pump

[Maintenance space]

* In case that there is a rim at the corner of ceiling, consider the dimension of the rim before installation.

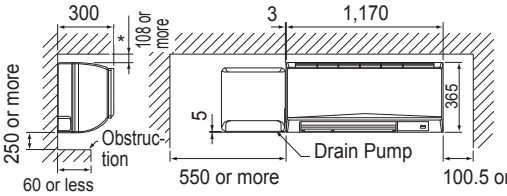

* The same space is required for the left front and rear piping.

Accessories

(Make sure of the following items attached with the Drain Pump before installation.)

(A) Drain Pump	(B) Screw	(C) Drain tube	(D) Drain tube cover	(E) Tube clip	(F) Pull tight	(G) Paper pattern	(H) Wiring plate
x 1	(M4 x 16) x 1 (M4 x 35) x 6	x 1	x 1	x 1	x 1	x 1	x 1

* The items (B) – (F) are packed between main body and cover of the Drain Pump. Take them out after the cover removed.

How to Use / How to Install

1. Before installation of the Drain Pump (* Position the indoor unit first.)

1-1 Set up of the Drain Pump

- Remove the cover and the mounting plate which is fixed on the back of the Drain Pump each.
  * The packaging material which is put between the cover and the main body of Drain Pump is only for cushion for transportation. Take it out as it is unnecessary.
  * Take out the accessories.
- Run the pull tight (F) attached through the square hole on the mounting plate.
- Cut the knock out hole on the cover with a nipper and etc.

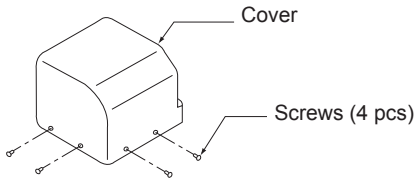

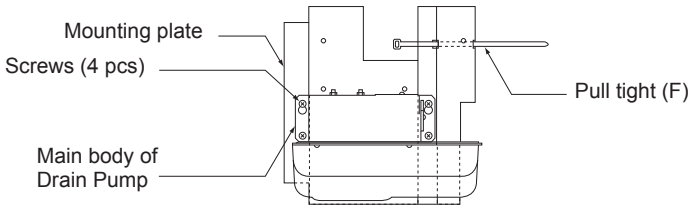

* The screws removed will be used later. Keep them not to lose.

1-2 Set up and installation of the indoor unit (* See the item of piping connection set up in the installation manual of the indoor unit.)

(1) Make the knock out hole for left side piping on the left side panel of the indoor unit.

(2) Pull out the drain cap from the left drain outlet.
- Hold the convex section at the end and pull the drain cap.

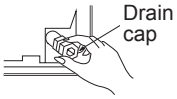

(3) Remove the drain hose from the indoor unit.
- Hold the end of the drain hose (a) (marked by the arrow) and pull the drain hose out (b).

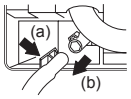

(4) Insert the drain cap into the right drain outlet.
- Insert a screwdriver or similar tool into the hole at the end of the cap and insert the cap fully into the outlet.

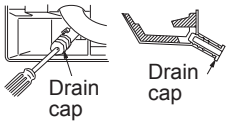

(5) Insert the accessory drain hose (C) into the left drain outlet.
- Insert the hose up to the base of the drain pipe connection opening.

* Make sure that the hook on the drain hose is securely caught on the projection in the opening in the drain pan.

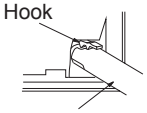

(6) Install the indoor unit.

⚠ CAUTION	**The indoor unit must be installed horizontally.**
	Otherwise, the water can leak and it will make the wall dirty.

2. Installation of the Drain Pump

2-1 Fixing of the mounting plate

- The installation place should be carefully considered if it is proper for installation. If it is not strong enough to hole the unit, make it stronger by using board or beam before installation.

(1) Decide the installation position of the mounting plate by using the paper pattern (G) attached.
(* The left end of the indoor unit should be marked in advance.)
  1) Fix the paper pattern on the wall with the screw (B) (M4 × 16) attached with putting it to the left end of the indoor unit for positioning of the Drain Pump as shown in the drawing.
  2) Position the mounting plate with pushing it against the paper pattern.

(2) Fix the mounting plate with the screws (B) (M4 × 35) attached. Fix the mounting plate using the 5 dia. holes.
(6 locations pointed by arrows in the drawing.)
In case that the mounting plate is fixed by fixing bolts (through bolts, bolt anchors, or nut anchors), get M10 or W3/8 screws locally and put them into two ø 12 holes of the mounting plate to fix it.

(3) When the mounting plates is installed, remove the paper pattern.

(4) Check that the mounting plate is level and positioned correctly with the indoor unit. (Refer to Dimensions)

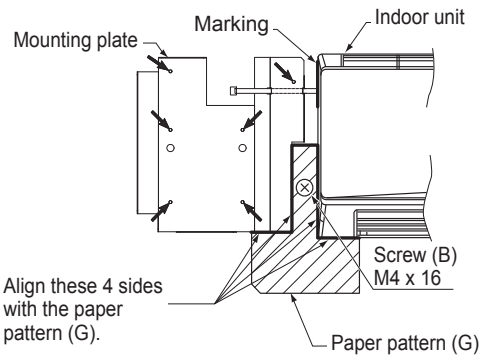

OPTIONAL PARTS

2-2 Installation of the Drain Pump

- Fix the Drain Pump on the mounting plate

(1) Install the screws to the 2 upper holes (indicated by the arrows shown in right figure) of the mounting plate by hand tightening them about halfway, and then hook the Drain Pump on the screws.

(2) Level the Drain Pump by using a spirit level. Then tighten the 4 screws securely to fix the Drain Pump.

⚠ CAUTION	**The Drain Pump must be leveled.**
	Otherwise, the water leaks and it makes wall dirty.

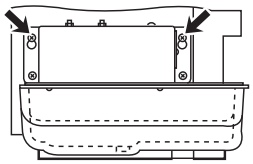

3. Installation of refrigerant piping (* See the item of refrigerant piping connection in the Installation of the indoor unit.)

(1) Install the refrigerant piping using the left piping method.

(2) When the refrigerant piping and drain pipe are routed vertically together, route the piping through the space in the mounting plate.

- Be sure that the indoor unit must be positioned at the place where was marked at 2-1.
- The bending radius of the refrigerant pipe must be R80 or less.
- The tube raised should be fixed with the pull tight which was put through the square hole of the mounting plate.

(3) Position the refrigerant piping in the left piping space of the indoor unit as shown in right figure.

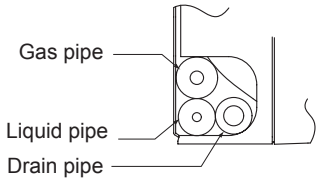

4. Installation of drain piping

4-1 Connection of drain tube

(1) Connect the drain tube (C) which is installed to the left side drain port of the indoor unit to the drain port of the Drain Pump.

(2) Fix the connection port securely with the tube clip (E) attached.

(3) Connect the flexible drain tube, which is run from the top panel of the Drain Pump, to the local drain piping. The part connected must be closed by vinyl chloride type glue.

(4) Insulate the flexible drain tube which is run from top panel of Drain Pump with the drain tube cover (D) attached.

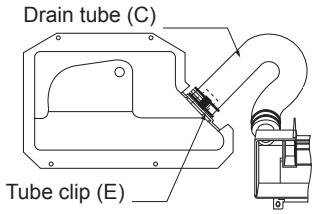

4-2 Installation of drain piping

(1) The drain pipe should be installed in accordance with the following procedure.

- The drain pipe should be installed so that the outdoor side (drain side) becomes falling slope (1/100 or more) and do not make trap or peaks.
- The horizontal run of the drain pipe should be 20 m or less. In case that the tube is crosscut sawing for long distance, some support brackets should be installed to prevent the pipe from being wavy. Never install the air bleeder. The drain will blow out.
- The hard vinyl chloride pipe VP20 (outer dia. 26 mm) should be used for the drain pipe. And the part connected must be closed by vinyl chloride type glue to prevent water leak.
- Be sure to wrap the drain pipe with adiabatic material (foam polyethylene: specific gravity 0.03, thickness 9 mm or more) available on the market.
- Do not install stink trap to the outlet of the drain pipe.
- The outlet of the drain pipe should be installed the place where it is not possible to cause stink.
- In case that plural drain pipes are installed, install the main pipe so that it comes approximately 10 cm lower than the drain outlet and the pipes must be made of material of VP30 or similar and they should be falling slope (1/100 or more).
- It is possible to raise the outlet of the drain pipe to 80 cm (max. lift) from bottom face of Drain Pump. However, if there is a horizontal run pipe connected to the vertical section of the drain pipe, water will overflow from the drain pan. This is because too much water will flow back when the operation stops. Therefore, the drain pipe must be raised vertically. Also, install the flow back stop at the highest point to prevent the water from flow back from horizontal part of the pipe. See the drawing below.

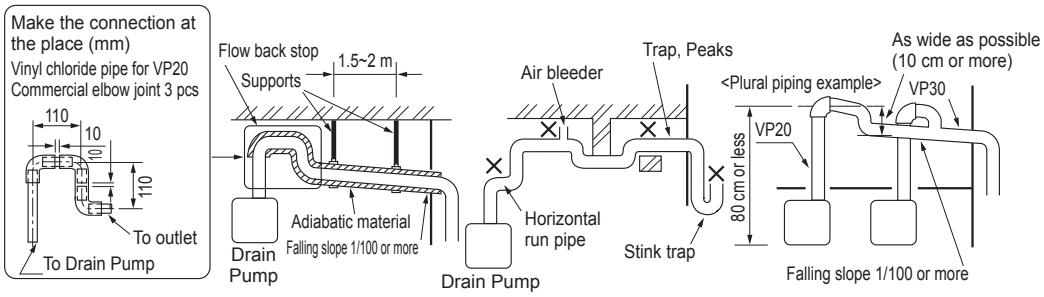

OPTIONAL PARTS

5. Electric wiring

5-1 Set up of the indoor unit (* Confirm that the power is off before starting the installation work.)

(1) Remove the panel of indoor unit and the electric box cover. (* See the indoor unit installation section in the installation manual of the indoor unit.)

5-2 Electric wiring

- Route the wiring through the left piping space of the indoor unit to the electric box as shown in right figure.
- Connect the lead wires to the connectors of the indoor unit control board, and then place the slack in the wires in the wiring storage space of the Drain Pump. (Fix the lead wires with the clamps.)

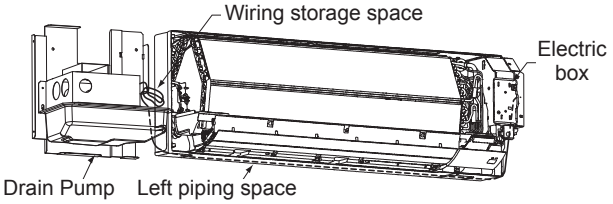

5-3 Electric wiring operation

- Pull out the electric box as far as necessary to connect the lead wires to the control board connectors “CNP” and “CN4F”.
- Connect the lead wires with connectors to the control board connectors “CNP” and “CN4F”. At this time, remove the bypass connector (will be unused) from the terminal CN4F of the control board.
- Be sure not to have the lead wires touch the heat generator (heat sink) on the control board.

Electric wiring operation

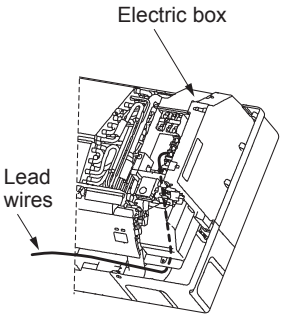

Wiring plate

- Affix the wiring plate (H) to the rear of the panel.

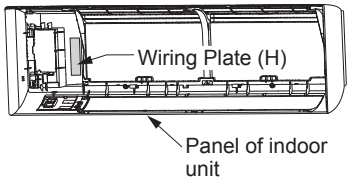

Electric circuit diagram

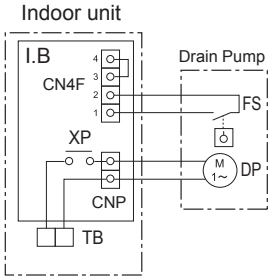

Symbol	Name
TB	Terminal block (indoor/outdoor connecting line)
I.B	Indoor control board
CNP	Connector (Drain Pump)
CN4F	Connector (Float switch)
DP	Drain Pump
FS	Float switch
XP	Relay (Drain Pump)

Note: □ stands for terminal connection.
⊡ stands for connector joint.

- After completing the electric wiring operation, make sure that the hooks are securely caught on the unit, and then put the electric box cover and panel back in place.

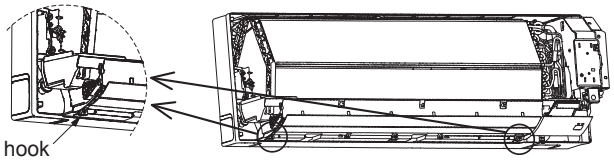

6. Test run

- After the installation of the Drain Pump has been completed, make sure that the drain works correctly and the water does not leak from any part of connection.

(1) Pour water
Pour water approximately 800 cc to the drain pan. (* See the drain pipe [checking the drain flow] section in the installation manual of the indoor unit.)
(* If the water is poured too much, it is possible that the drainage does not work due to alarm stop by activation of drain over flow protection device.)

(2) Test run
In accordance with the procedure for test run in the installation manual for the indoor unit, operate the air cooling and make sure that the drainage works and the water does not leak.
* When the Drain Pump is installed in winter season, the water must be drained.
To drain water, remove the drain plug under the Drain Pump. Prepare the pan to receive drain.
When the drainage has been completed, put the drain plug back in place.

(3) After checking, put the cover back in place.
* Make sure that the left end of the indoor unit perfectly comes on the point marked at 2-1. (If they do not match, the cover will not be able to be installed or there will be a gap between the cover and the indoor unit.)

Drain Pump for Wall Mounted models PAC-SH75DM-E

Photo

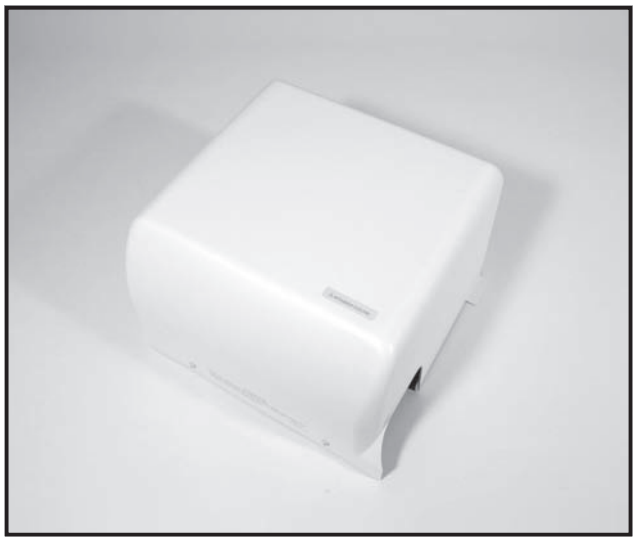

Descriptions

Raises drain generated during unit's operation to seure the appropriate angle of the drain pipe.

Applicable Models

- PKA-RP35HAL
- PKA-RP50HAL

Specifications

Rated voltage	220-240V 50Hz / 60Hz
Power cunsumption	12 / 10.8W
Operating current	0.114 / 0.092A
Discharge lift	Max. 500mm from drain pump's top surface
Discharge rate	24 ℓ /h or more
External dimensions (mm)	300 (H) x 300 (W) x 187 (D)
Exterior	Cover : ABS resin (Munsell 6.4Y 8.9/0.4)
Driving motor	Single, shading type (Class E insulation)
Drain piping	Connected to drain outlet. PVC pipe VP-20 (O.D.26) can be used

Dimensions

Unit : mm

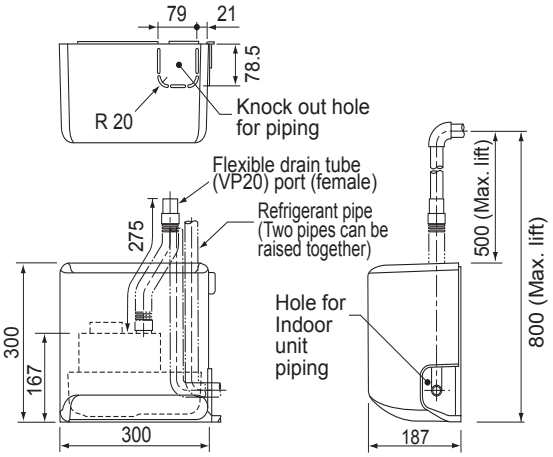

Dimension of Mounting plate

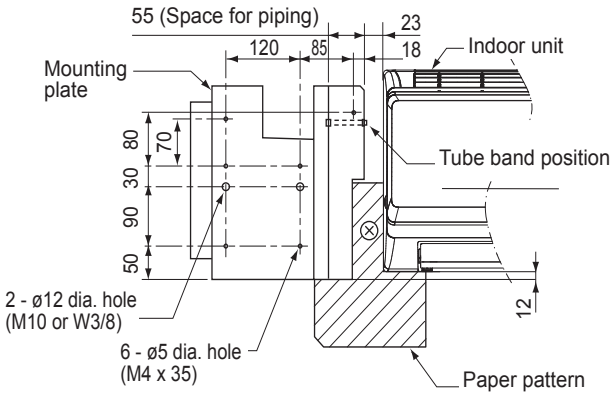

Required space for installation of Drain Pump

[Maintenance space]

* In case that there is a rim at the corner of ceiling, consider the dimension of the rim before installation.

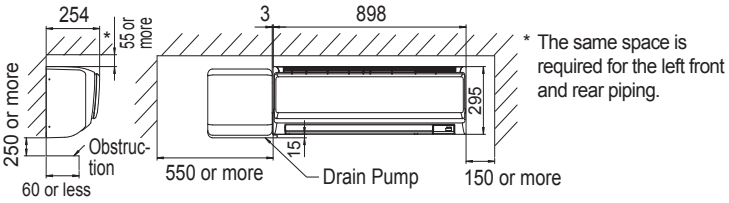

Accessories

(Make sure of the following items attached with the Drain Pump before installation.)

(A) Drain Pump	(B) Screw	(C) Drain tube	(D) Drain tube cover	(E) Tube clip	(F) Pull tight	(G) Paper pattern	(H) Wiring plate
x 1	(M4 x 16) x 1 (M4 x 35) x 6	x 1	x 1	x 1	x 1	x 1	x 1

* The items (B) – (F) are packed between main body and cover of the Drain Pump. Take them out after the cover removed.

OPTIONAL PARTS

How to Use / How to Install

1. Before installation of the Drain Pump (* Position the indoor unit first.)

1-1 Set up of the Drain Pump

- Remove the cover and the mounting plate which is fixed on the back of the Drain Pump each.
  * The packaging material which is put between the cover and the main body of Drain Pump is only for cushion for transportation. Take it out as it is unnecessary.
  * Take out the accessories.
- Run the pull tight (F) attached through the square hole on the mounting plate.
- Cut the knock out hole on the cover with a nipper and etc.

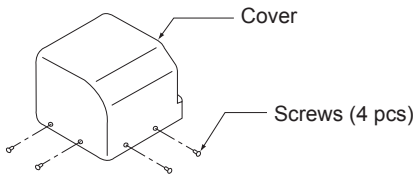

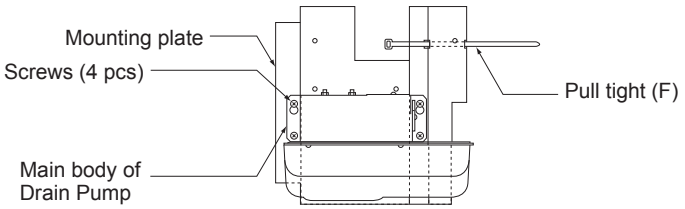

* The screws removed will be used later. Keep them not to lose.

1-2 Set up and installation of the indoor unit (* See the item of piping connection set up in the installation manual of the indoor unit.)

(1) Make the knock out hole for left side piping on the left side panel of the indoor unit.

(2) Pull out the drain cap from the left drain outlet.
- Hold the convex section at the end and pull the drain cap.

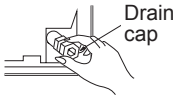

(3) Remove the drain hose from the indoor unit.
- Hold the end of the drain hose (a) (marked by the arrow) and pull the drain hose out (b).

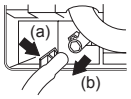

(4) Insert the drain cap into the right drain outlet.
- Insert a screwdriver or similar tool into the hole at the end of the cap and insert the cap fully into the outlet.

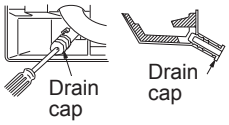

(5) Insert the accessory drain hose (C) into the left drain outlet.
- Insert the hose up to the base of the drain pipe connection opening.

* Make sure that the hook on the drain hose is securely caught on the projection in the opening in the drain pan.

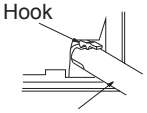

(6) Install the indoor unit.

⚠ CAUTION	**The indoor unit must be installed horizontally.**
	Otherwise, the water can leak and it will make the wall dirty.

2. Installation of the Drain Pump

2-1 Fixing of the mounting plate

- The installation place should be carefully considered if it is proper for installation. If it is not strong enough to hole the unit, make it stronger by using board or beam before installation.

(1) Decide the installation position of the mounting plate by using the paper pattern (G) attached.
(* The left end of the indoor unit should be marked in advance.)
  1) Fix the paper pattern on the wall with the screw (B) (M4 × 16) attached with putting it to the left end of the indoor unit for positioning of the Drain Pump as shown in the drawing.
  2) Position the mounting plate with pushing it against the paper pattern.

(2) Fix the mounting plate with the screws (B) (M4 × 35) attached. Fix the mounting plate using the 5 dia. holes.
(6 locations pointed by arrows in the drawing.)
In case that the mounting plate is fixed by fixing bolts (through bolts, bolt anchors, or nut anchors), get M10 or W3/8 screws locally and put them into two ø 12 holes of the mounting plate to fix it.

(3) When the mounting plates is installed, remove the paper pattern.

(4) Check that the mounting plate is level and positioned correctly with the indoor unit. (Refer to Dimensions)

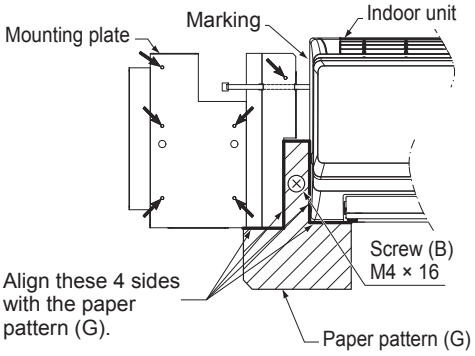

OPTIONAL PARTS

2-2 Installation of the Drain Pump

- Fix the Drain Pump on the mounting plate.

(1) Install the screws to the 2 upper holes (indicated by the arrows shown in right figure) of the mounting plate by hand tightening them about halfway, and then hook the Drain Pump on the screws.

(2) Level the Drain Pump by using a spirit level. Then tighten the 4 screws securely to fix the Drain Pump.

⚠ CAUTION	**The Drain Pump must be leveled.**
	Otherwise, the water leaks and it makes wall dirty.

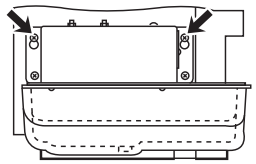

3. Installation of refrigerant piping (* See the item of refrigerant piping connection in the Installation of the indoor unit.)

(1) Install the refrigerant piping using the left piping method.

(2) When the refrigerant piping and drain pipe are routed vertically together, route the piping through the space in the mounting plate.

- Be sure that the indoor unit must be positioned at the place where was marked at 4-1.
- The bending radius of the refrigerant pipe must be R80 or less.
- The tube raised should be fixed with the pull tight which was put through the square hole of the mounting plate.

(3) Position the refrigerant piping in the left piping space of the indoor unit as shown in right figure

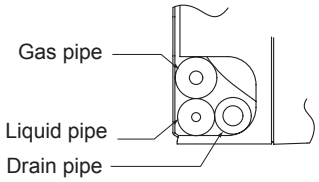

4. Installation of drain piping

4-1 Connection of drain tube

(1) Connect the drain tube (C) which is installed to the left side drain port of the indoor unit to the drain port of the Drain Pump.

(2) Fix the connection port securely with the tube clip (E) attached.

(3) Connect the flexible drain tube, which is run from the top panel of the Drain Pump, to the local drain piping. The part connected must be closed by vinyl chloride type glue.

(4) Insulate the flexible drain tube which is run from top panel of Drain Pump with the drain tube cover (D) attached.

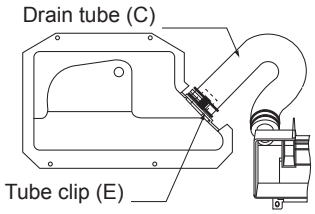

4-2 Installation of drain piping

(1) The drain pipe should be installed in accordance with the following procedure.

- The drain pipe should be installed so that the outdoor side (drain side) becomes falling slope (1/100 or more) and do not make trap or peaks.
- The horizontal run of the drain pipe should be 20 m or less. In case that the tube is horizontally run for long distance, some support brackets should be installed to prevent the pipe from being wavy. Never install the air bleeder. The drain will blow out.
- The hard vinyl chloride pipe VP20 (outer dia. 26 mm) should be used for the drain pipe. And the part connected must be closed by vinyl chloride type glue to prevent water leak.
- Be sure to wrap the drain pipe with adiabatic material (foam polyethylene: specific gravity 0.03, thickness 9 mm or more) available on the market.
- Do not install stink trap to the outlet of the drain pipe.
- The outlet of the drain pipe should be installed the place where it is not possible to cause stink.
- In case that plural drain pipes are installed, install the main pipe so that it comes approximately 10 cm lower than the drain outlet and the pipes must be made of material of VP30 or similar and they should be falling slope (1/100 or more).
- It is possible to raise the outlet of the drain pipe to 80 cm (max. lift) from bottom face of Drain Pump. However, if there is a horizontal run pipe connected to the vertical section of the drain pipe, water will overflow from the drain pan. This is because too much water will flow back when the operation stops. Therefore, the drain pipe must be raised vertically. Also, install the flow back stop at the highest point to prevent the water from flow back from horizontal part of the pipe. See the drawing below.

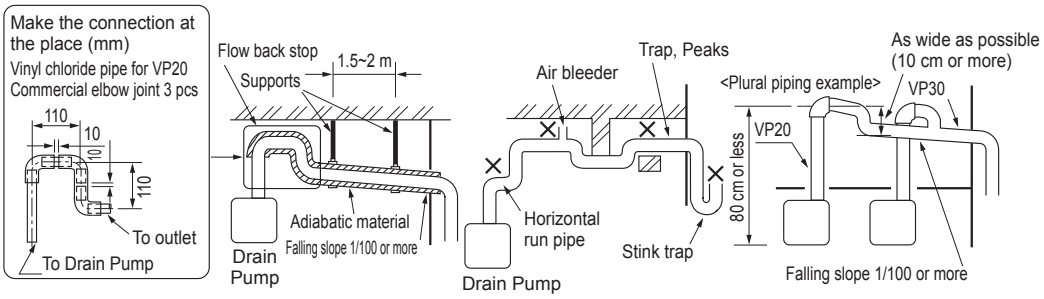

OPTIONAL PARTS

5. Electric wiring

5-1 Set up of the indoor unit (* Confirm that the power is off before starting the installation work.)

(1) Remove the panel of indoor unit and the electric box cover. (* See the indoor unit installation section in the installation manual of the indoor unit.)

5-2 Electric wiring

- Route the wiring through the left piping space of the indoor unit to the electric box as shown in right figure.
- Connect the lead wires to the connectors of the indoor unit control board, and then place the slack in the wires in the wiring storage space of the Drain Pump. (Fix the lead wires with the clamps.)

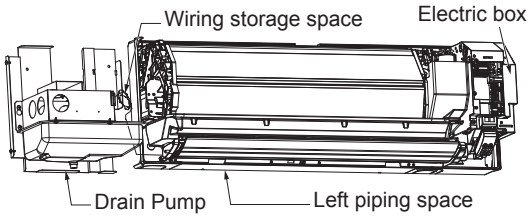

5-3 Electric wiring operation

- Pull out the electric box as far as necessary to connect the lead wires to the control board connectors “CNP” and “CN4F”.
- Connect the lead wires with connectors to the control board connectors “CNP” and “CN4F”. At this time, remove the bypass connector (will be unused) from the terminal CN4F of the control board.
- Be sure not to have the lead wires touch the heat generator (heat sink) on the control board.

Electric wiring operation

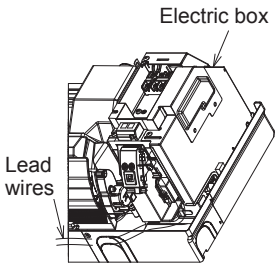

Wiring plate

- Affix the wiring plate (H) to the rear of the panel.

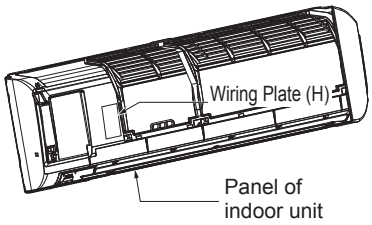

Electric circuit diagram

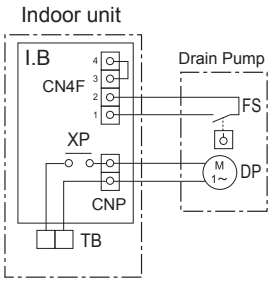

Symbol	Name
TB	Terminal block (indoor/outdoor connecting line)
I.B	Indoor control board
CNP	Connector (Drain Pump)
CN4F	Connector (Float switch)
DP	Drain Pump
FS	Float switch
XP	Relay (Drain Pump)

Note: □ stands for terminal connection.
⊡ stands for connector joint.

- After completing the electric wiring operation, make sure that the hooks are securely caught on the unit, and then put the electric box cover and panel back in place.

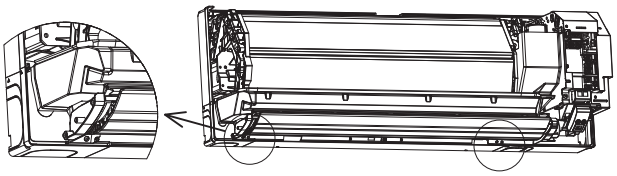

6. Test run

- After the installation of the Drain Pump has been completed, make sure that the drain works correctly and the water does not leak from any part of connection.

(1) Pour water
Pour water approximately 800 cc to the drain pan. (* See the drain pipe [checking the drain flow] section in the installation manual of the indoor unit.)
(* If the water is poured too much, it is possible that the drainage does not work due to alarm stop by activation of drain over flow protection device.)

(2) Test run
In accordance with the procedure for test run in the installation manual for the indoor unit, operate the air cooling and make sure that the drainage works and the water does not leak.
* When the Drain Pump is installed in winter season, the water must be drained.
To drain water, remove the drain plug under the Drain Pump. Prepare the pan to receive drain.
When the drainage has been completed, put the drain plug back in place.

(3) After checking, put the cover back in place.
* Make sure that the left end of the indoor unit perfectly comes on the point marked at 2-1. (If they do not match, the cover will not be able to be installed or there will be a gap between the cover and the indoor unit.)

Drain Pump for Ceiling Suspended models PAC-SH83/84/85DM-E

Photo

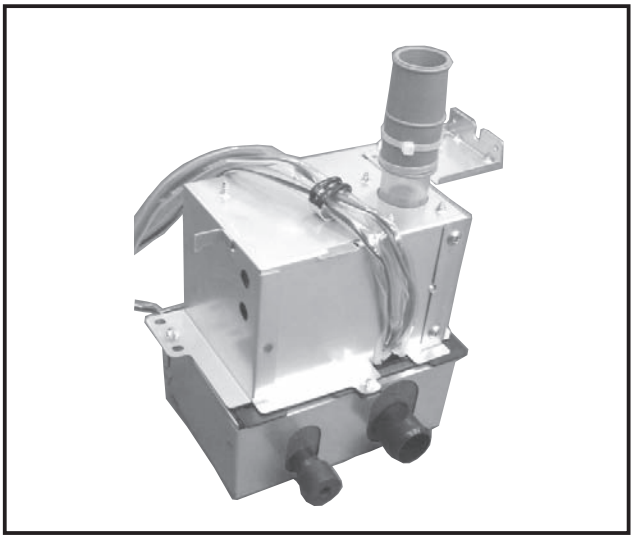

Descriptions

Raises drain generated during unit's operation to seure the appropriate angle of the drain pipe.

Applicable Models

Drain pump	PAC-SH83DM-E	PAC-SH84DM-E	PAC-SH85DM-E
Applicable models	PCA-RP50KA	PCA-RP71KA PCA-RP100KA PCA-RP125KA PCA-RP140KA	PCA-RP60KA

Specifications

Rated power	220V AC, single-phase, 50/60Hz
Power consumption	12/10.8W
Operating current	0.114/0.092A
Drain lift	Max. 600mm from indoor unit's top surface
Discharge rate	24 ℓ /h or more
Driving motor	Shading type (Class E insulation)
Drain piping	Connected to drain outlet. PVC pipe VP-20 (O.D.Φ26) can be used.

Dimensions

Unit : mm

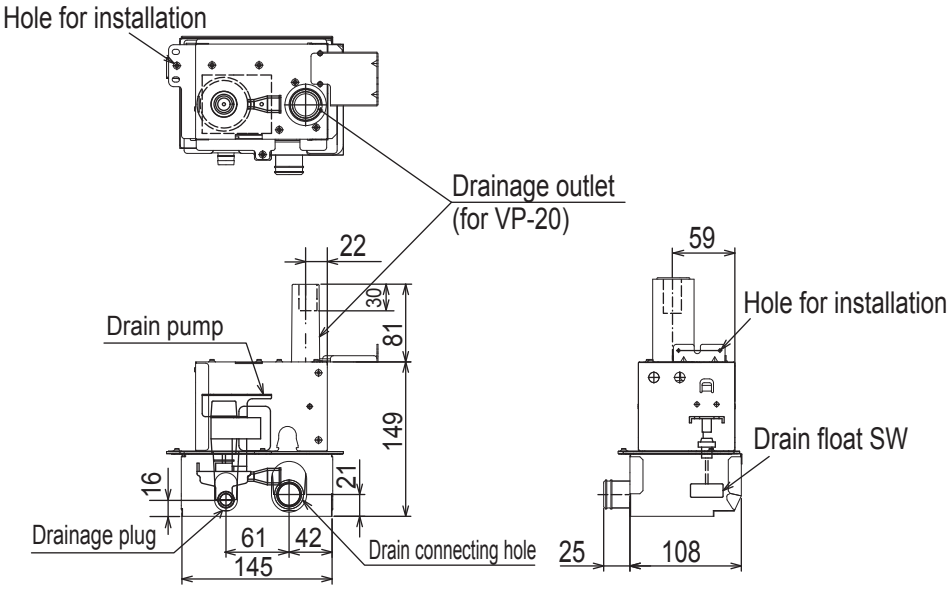

OPTIONAL PARTS

How to Use / How to Install

1 Confirming Supplied Accessories

* Before starting installation, make sure that the following accessories are present.

① Drain lift up mechanism	② Attachment	③ Screws (4×10)	④ VP-20 pipe	⑤ Pipe cover	⑥ Flexible hose	⑦ Fastener
×1	① Drain lift up mechanism fixture ×1	For the installation of drain lift up mechanism① ×6	×1	For insulation of VP20 pipe④ ×1	×1	×1

⑧ L-shaped pipe (gas pipe)	⑨ L-shaped pipe (liquid pipe)	⑩ Insulator A	⑪ Insulator B
×1	PAC-SH83/84 ×1 PAC-SH85 ×2	6t×220×80 (For internal insulation) For the insulation of L-shaped pipes ⑧ and ⑨ and the refrigerant pipes. ×2	3t×250×120 (For external insulation) For the insulation of L-shaped pipes ⑧ and ⑨ and the refrigerant pipes. ×2

2 Installation Diagram of the Drain lift up mechanism

* This drain lift up mechanism must be installed inside an indoor unit.
* Installing this drain lift up mechanism limits to arrange the refrigerant pipe only upward.
* To facilitate installation of the drain lift up mechanism, it should be installed before indoor unit.
* The size of the plumbing that must connect, by the refrigerant kind of the indoor unit that corresponds in the case of PAC-SH85DM-E, changes.
* Please refer to the installation manual of an indoor unit for details.
* The L-shaped pipes there are bringing are corresponding to either refrigerant plumbing.

※1 In case of accessory parts VP-20pipe ④ and pipe cover ⑤ do not have enough length because the lifting height is high, please supply locally.

Unit:mm

Viewed from the Top

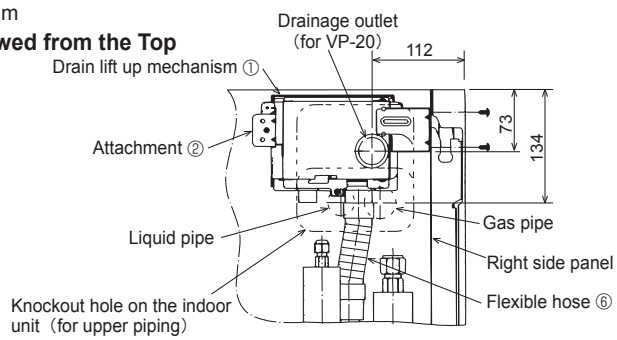

〈Table 1〉

Gas pipe	Liquid Pipe	Drain lift up mechanism Model
ϕ12.7	ϕ6.35	PAC-SH83
ϕ15.88	ϕ9.52	PAC-SH84
ϕ15.88	ϕ6.35/ϕ9.52	PAC-SH85

Viewed from the Front

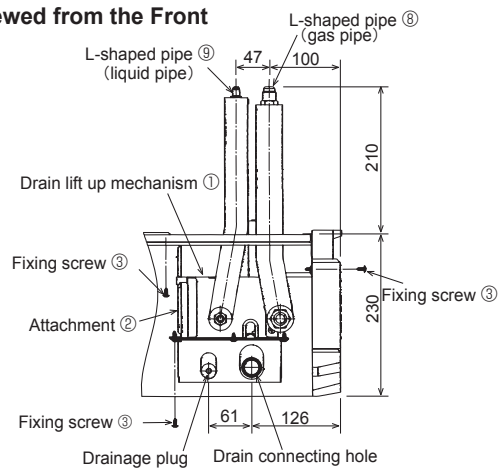

Viewed from the Right

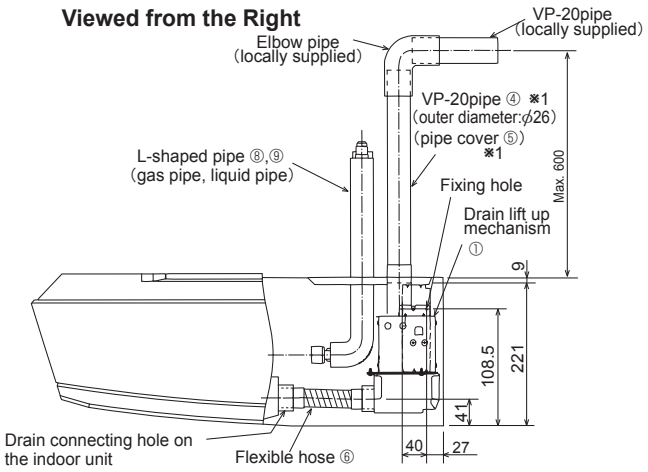

Positions of Holes on the Ceiling

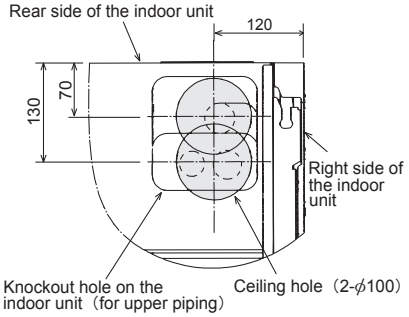

OPTIONAL PARTS

3 Installing the Drain lift up mechanism

1.Remove the intake grille and side panel. (Refer to the indoor unit installation manual.)
2.Prepare the knockout hole to be used for the upper piping of the indoor unit.
3.Fix the attachment ② with the fixing screws ③ (×2)
4.Fix the drain lift up mechanism ① with the fixing screws ③ (×4)

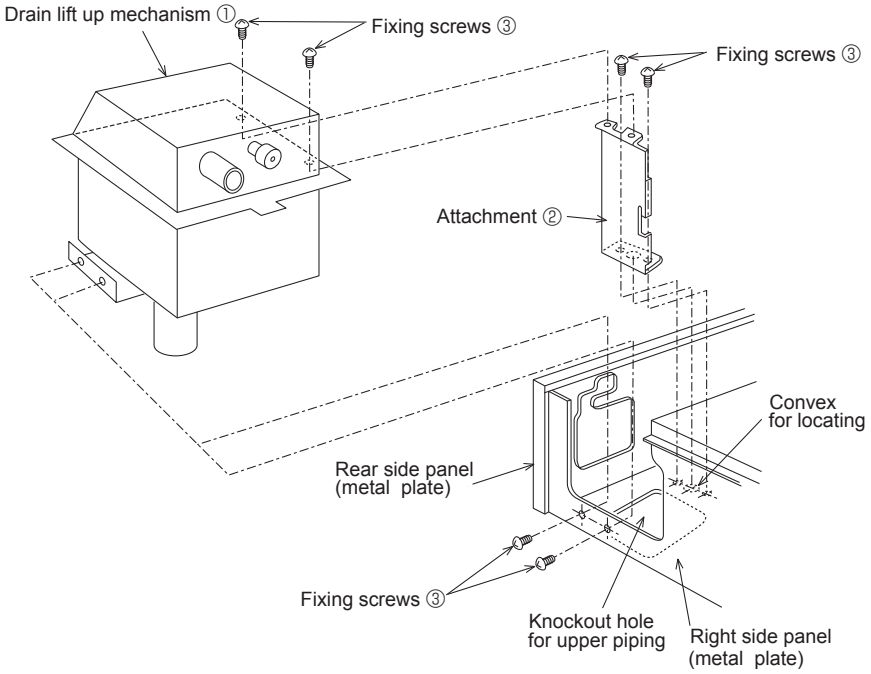

4 Refrigerant Piping

***For details on piping, refer to the installation manual of the indoor unit.**

[With the stop valve of the outdoor unit fully closed]

1.Apply lubricant to the flare sheet of the L-shaped pipes (gas pipe, liquid pipe) ⑧⑨.
2.Remove the flare nut and cap from the indoor unit.
3.Apply lubricant to the flare sheet connecting section of the indoor unit.
4.Connect the L-shaped pipes (gas pipe, liquid pipes) ⑧ and ⑨ quickly.
5.Fit the removed flare nut to the existing pipes and carry out flaring.
6.Connect the L-shaped pipes with the existing pipes in the same way.
7.Cover each connection with heat insulator ⑩⑪.

[After the refrigerant circuit is complete]

8.Vacuumize the refrigerant lines through the service port of the liquid stop valve.
9.Fully open the stop valves (both liquid and gas).
* The method for oparating the stop valve is described on the outdoor unit installation manual.

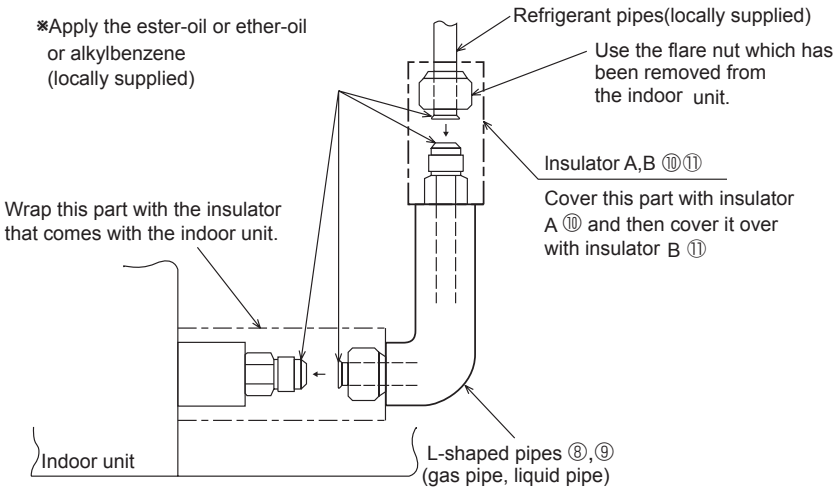

5 Drain Piping

※ In case of accessory parts VP-20pipe ④ and pipe cover ⑤ do not have enough length because the lifting height is high, please purchase procure supply locally.

***For details on piping, refer to the installation manual of the indoor unit.**

1.Apply vinyl chloride type abhesive to the drainage outlet of the drain lift up mechanism ① , then insert the VP-20 pipe ④ into it, (30mm deep)
2.Connect the VP20 pipe ④ and existing drain pipe using a 90-degree elbow etc. and adhesive.
3.Cover the VP-20 pipe ④ with the pipe cover ⑤.
4.Apply vinyl chloride type adhesive to the drain lift up mechanism ① and drain connecting hole on the indoor unit, then insert the flexible hose ⑥ into them. Take care that the hose does not twist.

***Insulate all pipes, from the drain lift up mechanism up to the outside.**

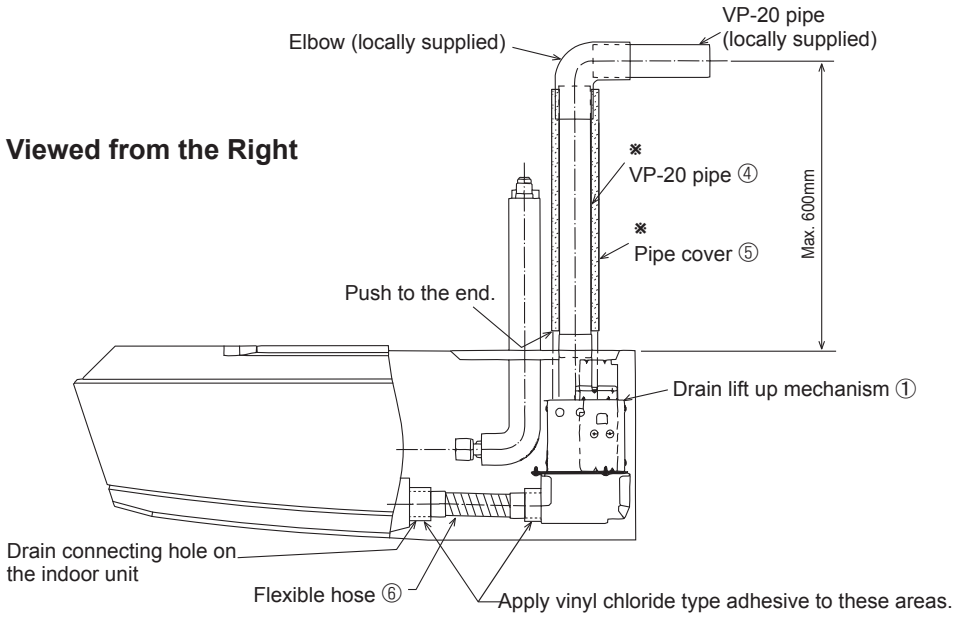

[Make sure to follow the following points during drain piping.]

*Drain lifting height must be less than 600mm.
*Incline the drain pipe downwards (1/100 or more) to the drainage side (outdoor).
*Do not create traps or peaks.
*Keep the horizontal piping within 20m. Use fixtures to prevent the pipe from waving.
*Do not install air vent pipes. The drainage may spout out.
*Use general-purpose hard vinyl chloride pipes (outer diameter:ϕ26) and apply vinyl chloride type adhesive to prevent any leakage.
*Cover with insulator (made of foamed polyethylene, with specific gravity of 0.03 thickness of 9mm or more).
*Do not install odor trap at the drain outlet.
*Locate the end of pipe at a point where odor is unlikely to occur.
*Do not insert the pipe directly into a drainage ditch where sulfur gas may be produced.
*Use VP-30 pipes for centralized piping. Install the centralized drain pipe approximately 10cm below the output of pipes connected from the drain lift up mechanism.

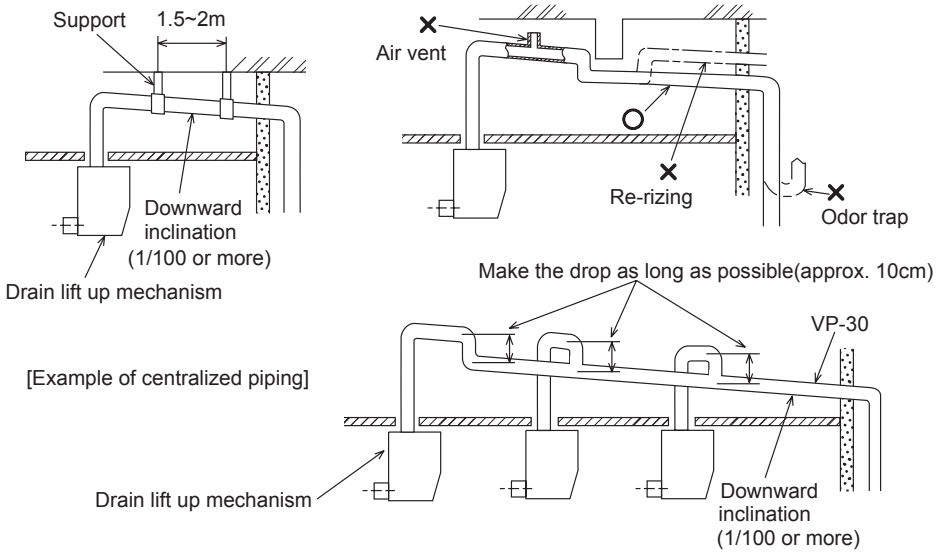

OPTIONAL PARTS

6 Electric Wiring

*Refer to the installation manual of the indoor unit together with this manual.
*Perform the work after checking that the power supply is off.
1.Remove the beam.
2.Remove the electric parts cover.
3.Pull the electric parts box downwards.
4.Connect the lead wire of drain lift up mechanism to the CNP and CN4F connectors provided on the control PCB of the indoor unit.
5.Tie up the lead wires with the fastener ⑦ so that the wires do not come apart inside the electric parts box.
6.When the wiring is finished, re-install the electric parts box, its cover and the beam.

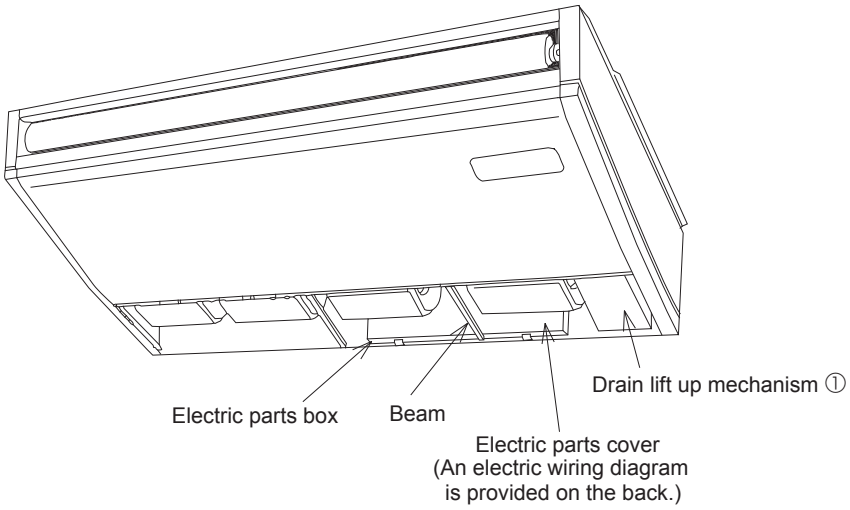

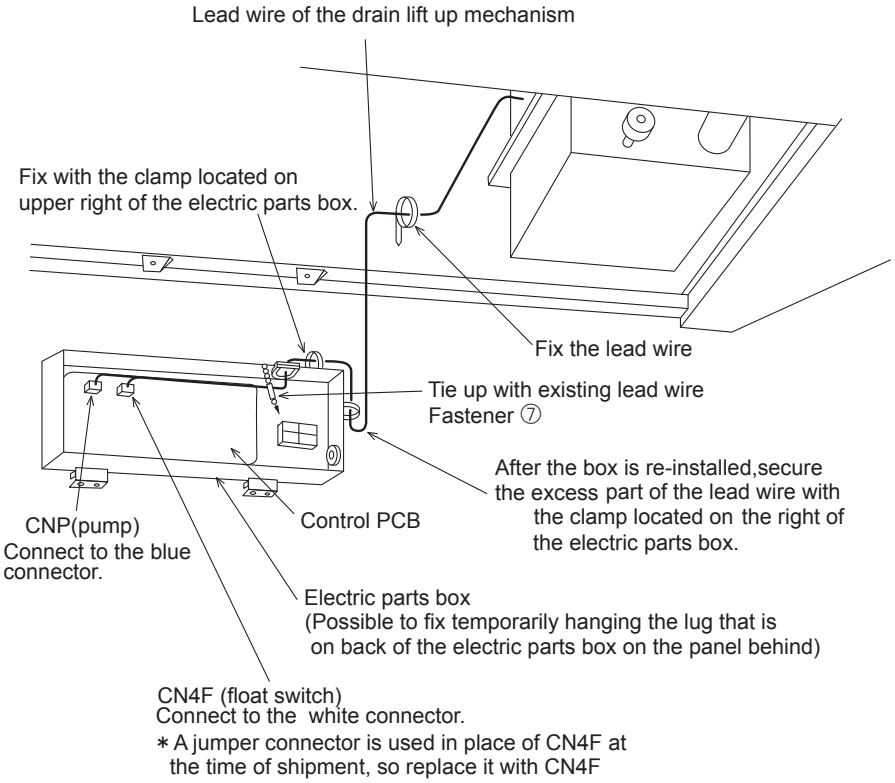

∗ The positions of the connectors which must be connected to the control PCB in certain models differ from those specified in the above diagram. Make sure that the lead wire are connected to CNP and CN4F connectors.

7 Test Run

*Through this test run, check that drainage is discharged properly and that there is no water leakage from any of the connections.
*Refer to the installation manual of the indoor unit together with this manual.

1. Supplying water
   Supply approximately 1000cc of water to the air outlet.

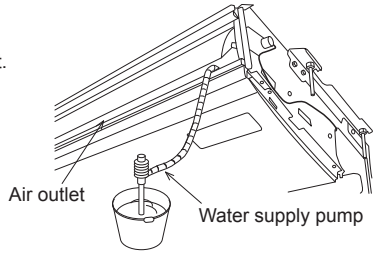

2.Carrying out a test run
   (1) Turn the power ON.
   (2) Press the TEST RUN button on the remote controller twice.
   (3) Press the MODE button to select cooling mode.
      *The drain lift up mechanism will be activated to start discharging the water.
   (4) Check whether water is discharged properly.
   (5) Press the POWER ON/OFF button to cancel the test run.
   (6) Turn the power OFF.

3.Re-install each part after checking.
   *If the drain lift up mechanism is installed at the time of the year when heating is used, make sure that the water for the drain check has been removed.
   After removal of the water, reinstall the drainage plug.

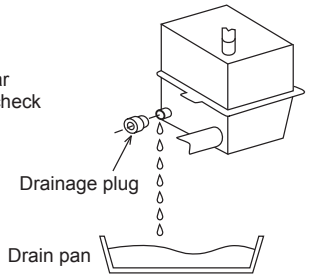

Installation figure

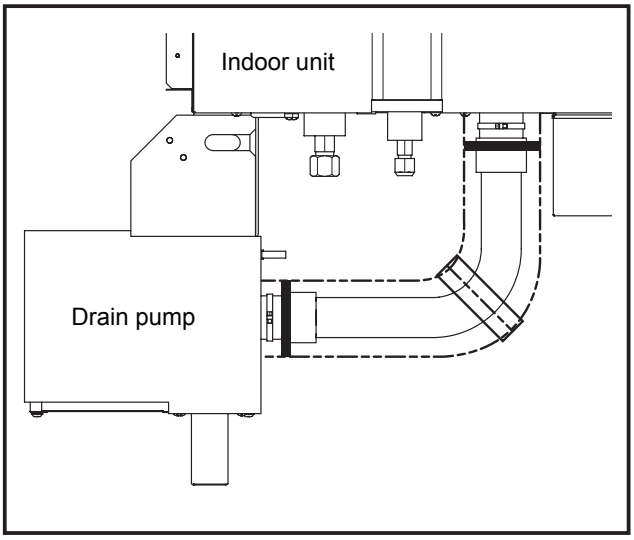

Descriptions

Raises drain generated during unit's operation to seure the appropriate angle of the drain pipe.

Applicable Models

- SEZ-KD35VA(L)
- SEZ-KD50VA(L)
- SEZ-KD60VA(L)
- SEZ-KD71VA(L)

Specifications

- ●External type
- ●220-240V AC
- ●Liquid level detection:Float switch

Provided parts

Check that the packet includes the following parts in addition to installation manual.

Item	① DRAIN PUMP	② ATTACHMENT	③ DRAIN HOSE 1	④ PIPE COVER 1	⑤ PIPE COVER 2
Quantity	1	1	1	1	1
Shape	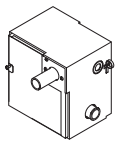	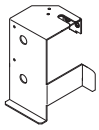	(385mm) 	(255mm) 	(200mm) 
Item	⑥ HOSE BAND	⑦ SCREW	⑧ CLAMP	⑨ FERRITE CLAMP	⑩ BAND 1
Quantity	1	3	3	1	2
Shape	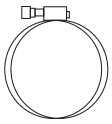		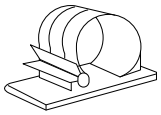	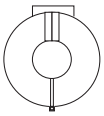	(100mm) 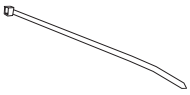
Item	⑪ DRAIN HOSE 2	⑫ PIPE COVER 3	⑬ BAND 2		
Quantity	1	1	6		
Shape	(175mm) 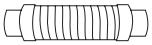		(380mm) 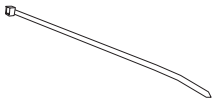		

OPTIONAL PARTS

How to Use / How to Install

1 Installing the Drain Pump

1-1 Installing the Drain Pump

(1) Unscrew the (a)screw on the unit cover, hook the ②ATTACHMENT over the mounting bracket on the unit, and screw it on to the unit with the (a)screw. (Fig. 1)

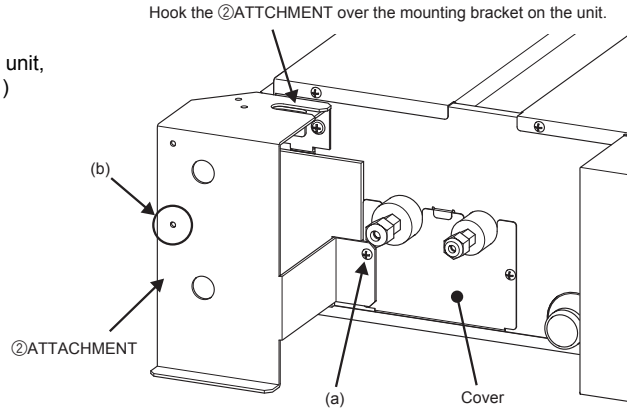

Fig. 1

(2) Temporarily screw in the ⑦SCREW in the hole (b) on the ②ATTACHMENT. (Fig. 1 and 2)

(3) Loosen the drain-pump-cover fixing screws, and remove the cover. (Fig. 3)

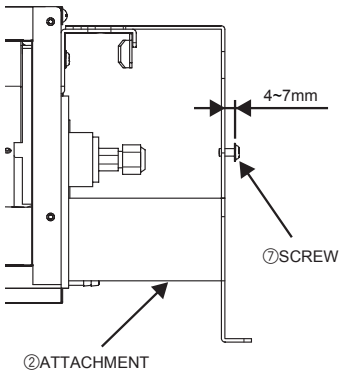

Fig. 2

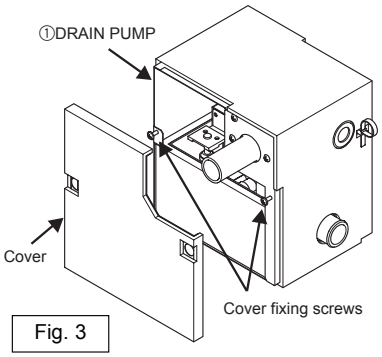

Fig. 3

(4) Hang the ①DRAIN PUMP on the ②ATTACHMENT by placing the ⑦SCREW (the one screwed in during Step (2) above) through the Figure-8 hole on back of the ①DRAIN PUMP, and then tighten the ⑦SCREW from inside the ①DRAIN PUMP. (Fig. 4)

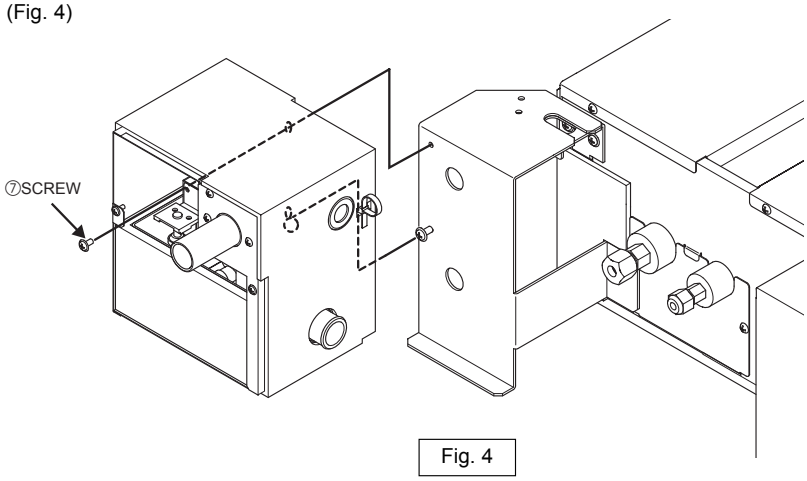

Fig. 4

1-2 Installing DRAIN HOSE 1

(1) Connect each end of ③DRAIN HOSE 1 to the drain port on the unit and on the drain pump. (Fig. 5)
✻ Insert the hose all the way to the end of the ports.
✻ Do not use any adhesive.

(2) Secure the hose with ⑥HOSE BANDs at both ends of the hose. (Fig. 5)

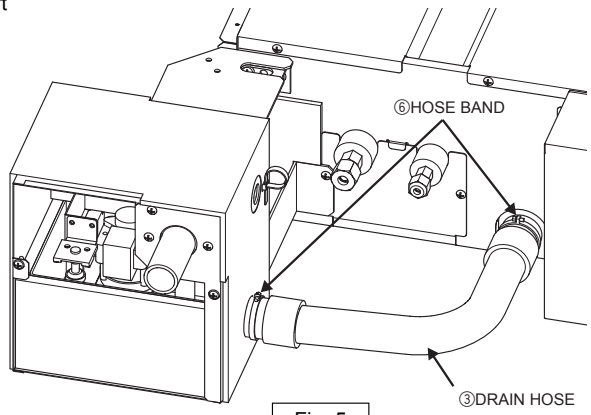

Fig. 5

(3) Attach ④PIPE COVER 1 and ⑤PIPE COVER 2 to ③DRAIN HOSE 1 flush against each other and against the unit and the drain pump, and then secure them in place with ⑬BANDs.
Wrap the pipe cover connection with vinyl tape to close the gap. (Fig. 6)

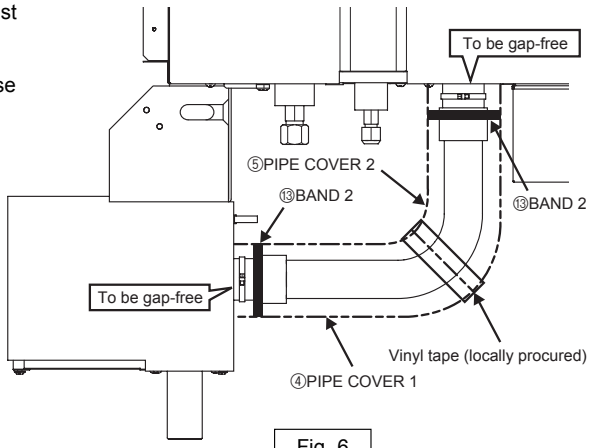

Fig. 6

1-3 Wiring connections

(1) Remove the CONTROL BOX COVER from the unit by unscrewing the two screws on the cover. (Fig. 7)

(2) Unscrew the (c)CONTROL BOX fixing screw. (Fig. 7)

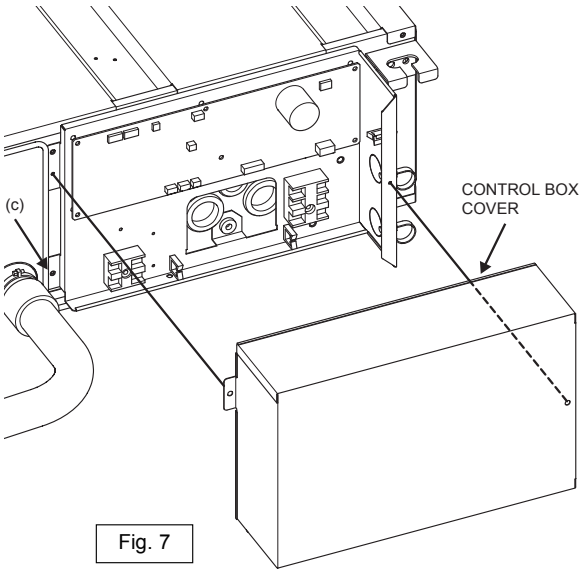

Fig. 7

(3) Remove the short-circuit connector from CN4F on the control board (white, 4P). (Fig. 8)

(4) Route the two drain pump wires behind the CONTROL BOX and into the CONTROL BOX.
Lift the CONTROL BOX in the direction of the arrow (d) to allow the wires through. (Fig. 8)
⁕ Do not pinch the wires.

(5) Wind the drain pump wire (connector: blue, 3P) around ⑨FERRITE CLAMP once, and fix it in place with ⑩BAND. (Fig. 9)

(6) Connect the drain pump wire (connector: blue, 3P) to CNP on the control board, and connect the float switch wire (white: 4P) to CN4F on the control board respectively. (Fig. 8)

(7) Place the screw(c) that was removed in Step 3-3.(2) above back on. (Fig. 7)

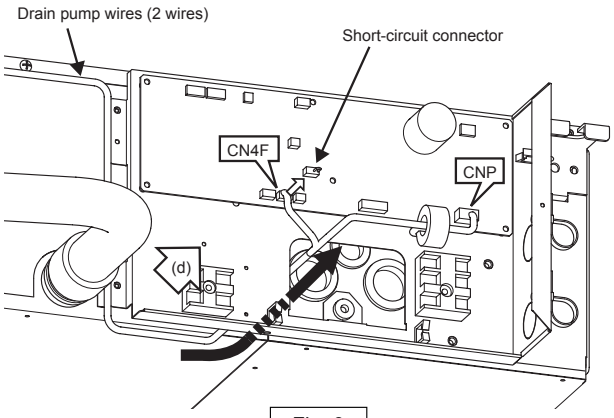

Fig. 8

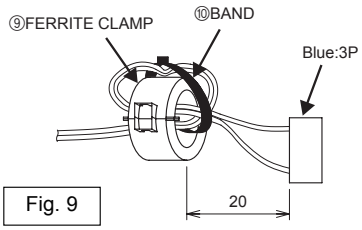

Fig. 9

(8) Fix the two drain pump wires with ⑧CLAMPs to the unit. (Fig. 10)

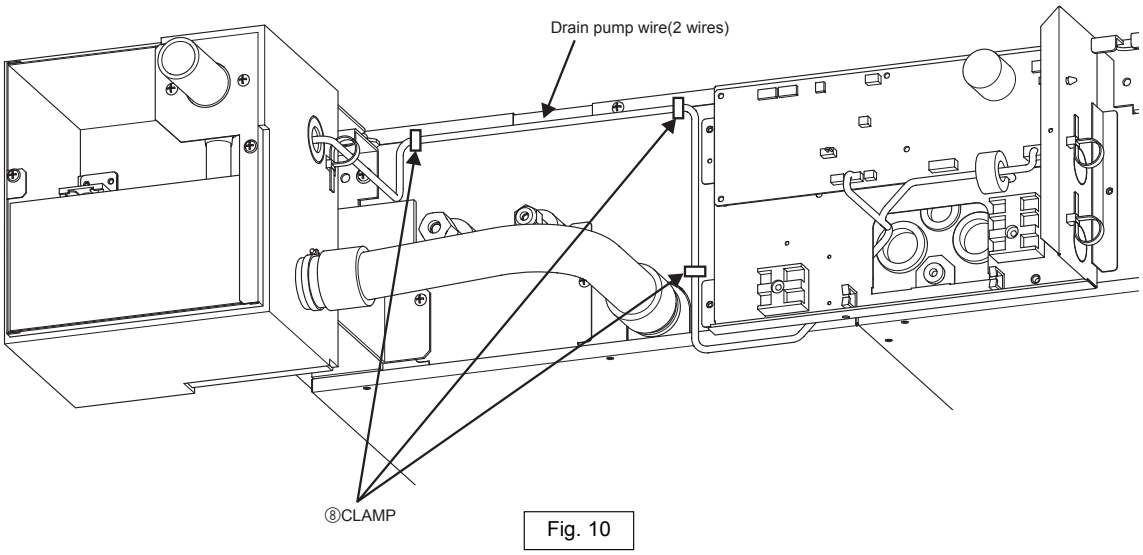

Fig. 10

2 Drain piping work

- Ensure that the drain piping is downward (pitch of more than 1/100) to the outdoor (discharge) side. Do not provide any trap or irregularity on the way.
- Ensure that any cross-wise drain piping is less than 20 m (excluding the difference of elevation). If the drain piping is long, provide metal braces to prevent it from waving. Never provide any air vent pipe. Otherwise drain may be ejected.
- Use a hard vinyl chloride pipe O.D. ø 32 for drain piping.
- Ensure that collected pipes are 10 cm lower than the unit body's drain port.
- Do not provide any odor trap at the drain discharge port.
- Put the end of the drain piping in a position where no odor is generated.
- Do not put the end of the drain piping in any drain where ionic gases are generated.

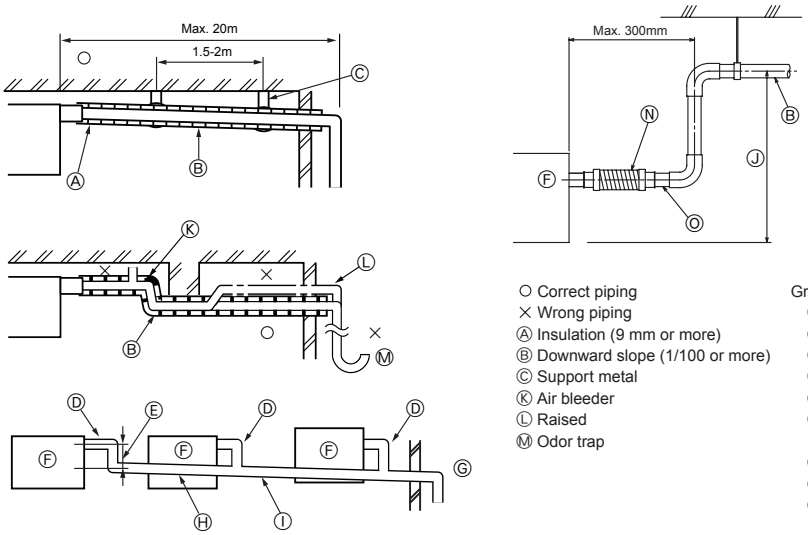

○ Correct piping
× Wrong piping
Ⓐ Insulation (9 mm or more)
Ⓑ Downward slope (1/100 or more)
Ⓒ Support metal
Ⓚ Air bleeder
Ⓛ Raised
Ⓜ Odor trap

Grouped piping
Ⓓ O. D. ø 32 PVC TUBE
Ⓔ Make it as large as possible. About 10 cm.
Ⓕ Indoor unit (Drain pump)
Ⓖ Make the piping size large for grouped piping.
Ⓗ Downward slope (1/100 or more)
Ⓘ O. D. ø 38 PVC TUBE for grouped piping. (9 mm or more insulation)
Ⓙ Up to 580 mm
Ⓝ Drain hose (accessory)
Ⓞ Horizontal or slightly upgradient

2-1. Insert the ⑪ DRAIN HOSE 2 into the drain port (insertion margin: 25mm).
(The drain hose must not be bent more than 45˚ to prevent the hose from breaking or clogging.)
(Attach the hose with glue for the hard vinyl chloride pipe, and fix it with the ⑬BAND 2.)

2-2. Attach the drain pipe (O.D. ø 32 PVC TUBE, field supply).
(Attach the pipe with glue for the hard vinyl chloride pipe, and fix it with the ⑬BAND 2.)

2-3. Perform insulation work on the drain pipe (O.D. ø 32 PVC TUBE) and on the socket (including elbow).

2-4. Check the drainage.

2-5. Attach the ⑫ PIPE COVER 3 and, fix it with the ⑬BAND 2 to insulate the drain port.

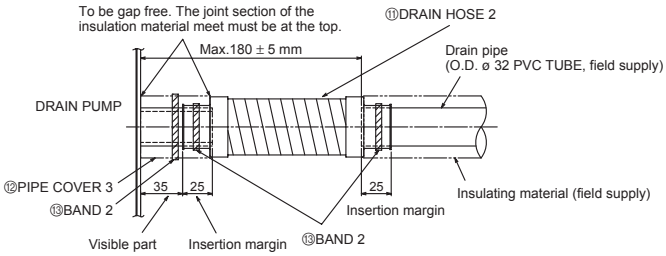

3 Confirming drain discharge

Make sure that the drain-up mechanism operates normally for discharge and that there is no water leakage from the connections.

- Be sure to confirm the above in a period of heating operation.
- Be sure to confirm the above before ceiling work is done in the case of a new construction.
- Make sure that water is not leaking from the connection (e) on the drain pump shown in the right figure.

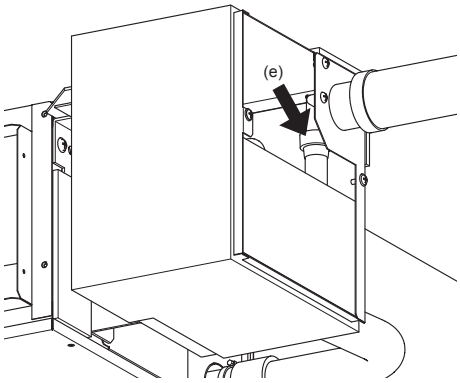

3-1. Fill water into the feed water pump using a feed water tank. In filling, be sure to put the end of the pump or tank in a drain pan. (If the insertion is incomplete, water may flow over the machine.)
❊ Do not splash water on the drain pump coil or the float switch wire through hole when pouring water.

3-2. Perform the test run in cooling mode, or turn on the switch SWE on the controller circuit board. (The drain pump and the fan are forced to operate without any remote controller operation.) Make sure using a transparent hose that drain is discharged.

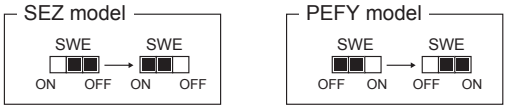

3-3. After confirmation, cancel the test run mode, and turn off the main power. When the switch SWE has been turned on, turn it off, and attach the CONTROL BOX COVER and the DRAIN PUMP COVER in the original positions.

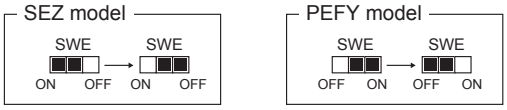

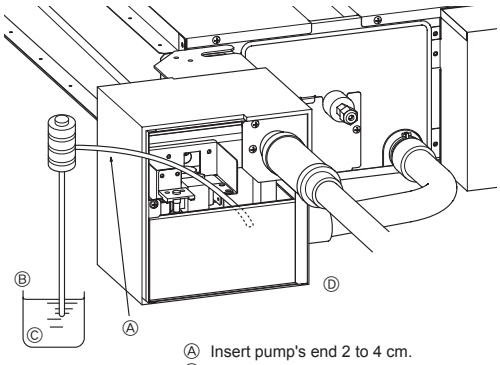

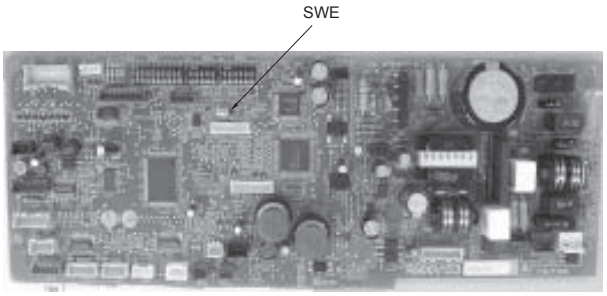

<Indoor board>

Ⓐ Insert pump's end 2 to 4 cm.
Ⓑ About 2000 cc
Ⓒ Water
Ⓓ Do not splash water on the drain pump coil or the float switch wire through hole when pouring water.

Photo

Descriptions

A decoration cover to be attached to the upper section of ceiling suspended models. Possible to prevent dust accumulation.

Applicable Models

■ PCA-RP71HA

Specifications

Material	SUS304 (0.8t)
Parts composition	Front cover x 1
	Suspension bracket cover x 4
	Tapping screw (4x10, with nylon washer) x 4
	Washer x 8 (hot-dip zinc-coated carbon steel sheet (t1.2))

Dimensions

Unit : mm

Front cover

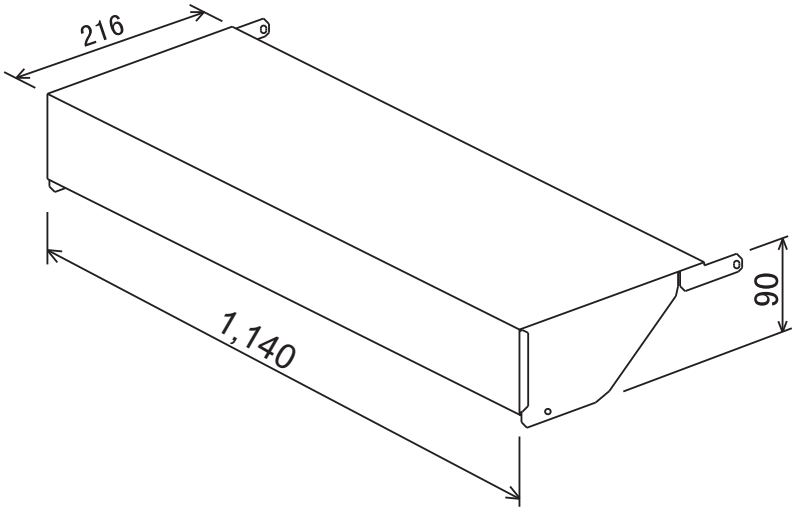

Suspention blacket cover

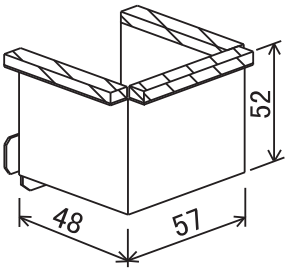

How to Use / How to Install

1. Checking Provided Parts

※Make sure that you have all the following parts before install ation:

① Front cover	② Suspending bracket covers	③ Tapping screws (4x10)	④ Washers
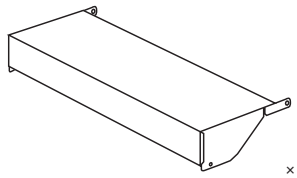 ×1	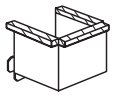 ×4	 (with nylon washers) ×4	 ×8

2. Front Cover Installation Procedure

★The following procedure shows how to attach the front cover after installing air-conditioner.

1. Loosen the nuts of bolts suspending the unit, and lower the unit by approx. 5 mm.
   ・When lowering the unit, be careful not to damage the wires, coolant pipe or drain pipe.
2. Remove the screws that secure the front panel and top panel to the unit (at 4 points).
   (The provided tapping screws③are spares for these screws.)
3. Put front cover ① over the unit.
   ・Be careful not to damage the insulation sheets pasted on the top surface of unit and the inside of front cover ①.
4. Use the screws removed in step 2 to temporarily secure front cover ①.
   (Do not tighten the screws at this time.)
5. Tighten the nuts of bolts suspending the unit, and fit the unit onto ceiling.
   ・Tighten the nuts while carefully watching the attached status of front cover ①.
6. Tighten the screws that were temporarily secured in step 4.
   ・Make sure that front cover holds the insulation sheet on the top surface of unit, and that the cover fits securely on the top surface of unit before tightening the screws.①
7. Separate the unit from ceiling to leave a gap of 2-3 mm fromceiling.
   ・Be sure to provide this space: If the unit is in contact with ceiling, the vibrations could be transmitted to ceiling.
8. Make sure that the unit is correctly installed, and then tighten the nuts of bolts suspending the unit.

[CAUTION] Do not tighten the lower double nuts yet, because installing suspending bracket covers must now be done.

※ If you attach the front cover before installing the unit, perform the procedure in steps 2 and 3, and then fully tighten the 2 screws on each side (4 in total).

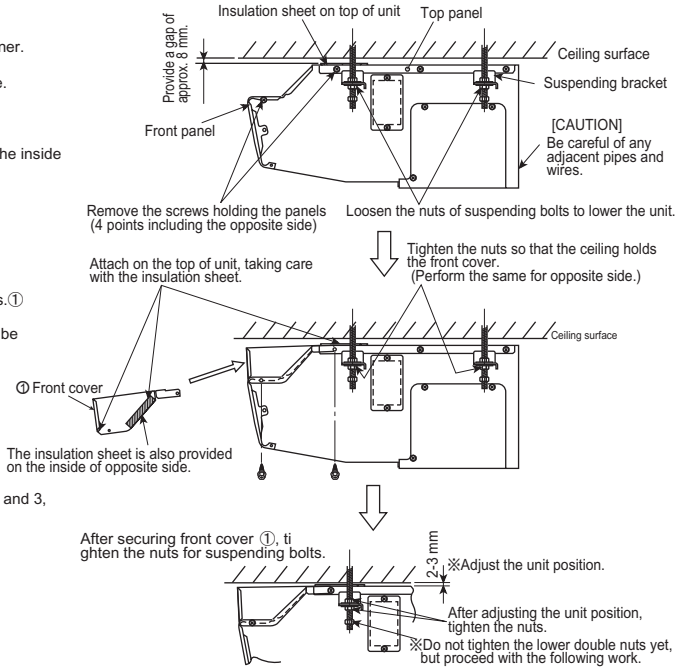

3. Suspending Bracket Installation Procedure

★Attach the suspending bracket covers in succession.

1. Remove the lower double nuts (from 4 points) from the suspending bolts.
2. Put the provided washers (tops and bottoms of suspending bracket covers) and suspending bracket covers through suspending bolts. ④
3. Tighten the nuts removed in step 1 for the suspending bolts.
   ・ Make sure that the suspending bracket covers are in close contact with the unit and ceiling.

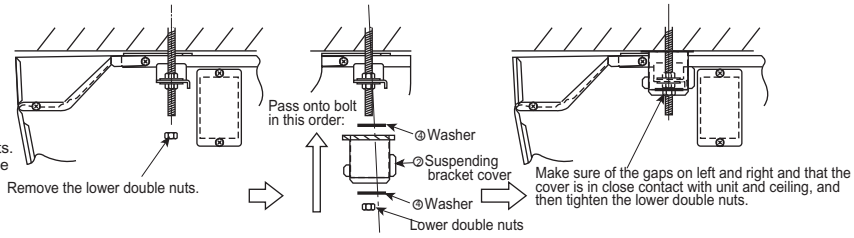

4. Test Run

※ Also refer to the installation manual of indoor unit.
★ Make sure that test run is performed without any abnormal sound, such as vibrations, fluttering sound, etc.
[Test Run Procedure]
1. Turn power on.
2. Press the TEST RUN button on remote controller twice.
3. Press the MODE button on remote controller to set to the fan mode.
   ∗ The fan will rotate to blow out air.
4. Make sure that no abnormal sound, such as vibrations, fluttering sound, etc. is heard.
5. Press the ON/OFF button on remote controller to release test run.
6. Turn power off.

Photo

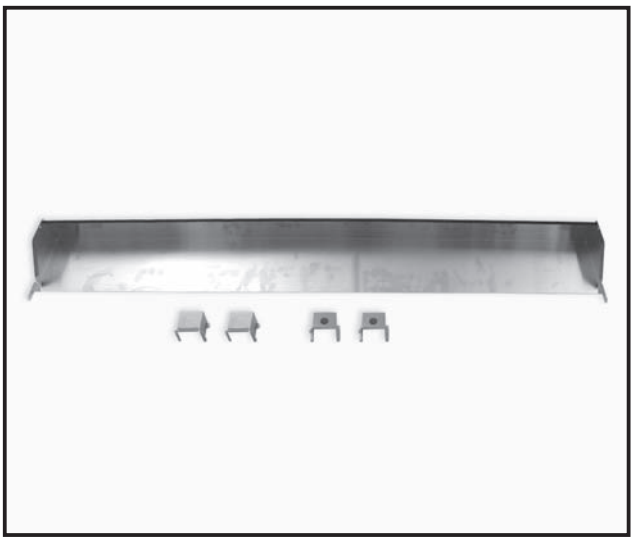

Descriptions

A decoration cover to be attached to the upper section of ceiling suspended models. Possible to prevent dust accumulation.

Applicable Models

■ PCA-RP125HA

Specifications

Material	SUS304 (0.8t)
Parts composition	Front cover x 1
	Suspension bracket cover x 4
	Tapping screw (4x10, with nylon washer) x 4
	Washer x 8 (hot-dip zinc-coated carbon steel sheet (t1.2))

Dimensions

Unit : mm

Front cover

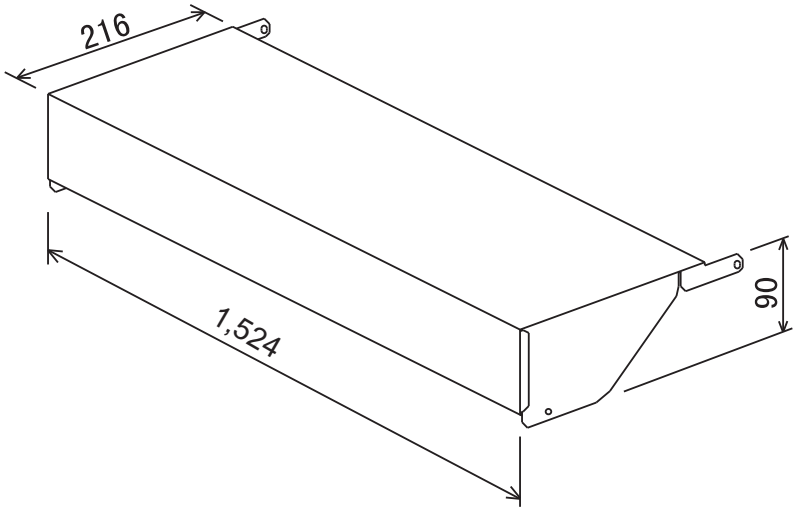

Suspention blacket cover

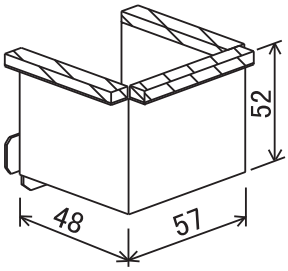

How to Use / How to Install

1. Checking Provided Parts

※Make sure that you have all the following parts before install ation:

① Front cover	② Suspending bracket covers	③ Tapping screws (4x10)	④ Washers
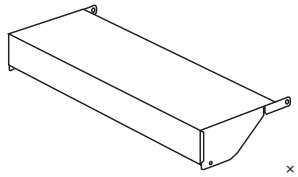	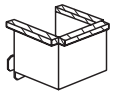	 (with nylon washers)	
×1	×4	×4	×8

2. Front Cover Installation Procedure

★The following procedure shows how to attach the front cover after installing air-conditioner.

1. Loosen the nuts of bolts suspending the unit, and lower the unit by approx. 5 mm.
   ・When lowering the unit, be careful not to damage the wires, coolant pipe or drain pipe.
2. Remove the screws that secure the front panel and top panel to the unit (at 4 points).
   (The provided tapping screws③are spares for these screws.)
3. Put front cover ① over the unit.
   ・Be careful not to damage the insulation sheets pasted on the top surface of unit and the inside of front cover ①.
4. Use the screws removed in step 2 to temporarily secure front cover ①.
   (Do not tighten the screws at this time.)
5. Tighten the nuts of bolts suspending the unit, and fit the unit onto ceiling.
   ・Tighten the nuts while carefully watching the attached status of front cover ①.
6. Tighten the screws that were temporarily secured in step 4.
   ・Make sure that front cover holds the insulation sheet on the top surface of unit, and that the cover fits securely on the top surface of unit before tightening the screws.①
7. Separate the unit from ceiling to leave a gap of 2-3 mm fromceiling.
   ・Be sure to provide this space: If the unit is in contact with ceiling, the vibrations could be transmitted to ceiling.
8. Make sure that the unit is correctly installed, and then tighten the nuts of bolts suspending the unit.

[CAUTION] Do not tighten the lower double nuts yet, because installing suspending bracket covers must now be done.

※ If you attach the front cover before installing the unit, perform the procedure in steps 2 and 3, and then fully tighten the 2 screws on each side (4 in total).

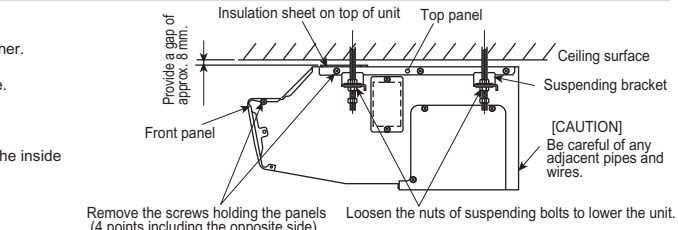

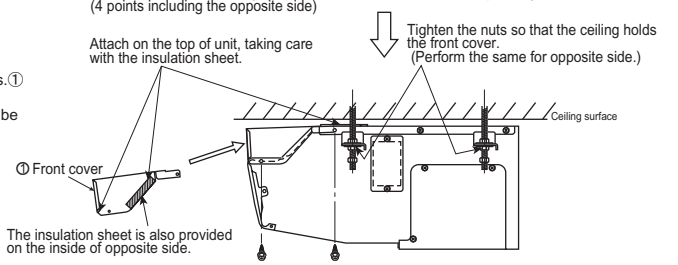

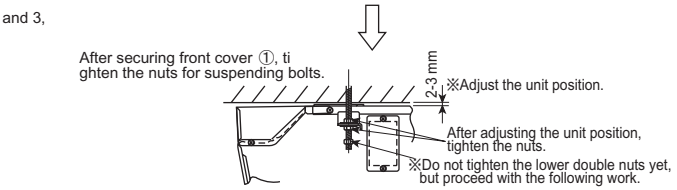

3. Suspending Bracket Installation Procedure

★Attach the suspending bracket covers in succession.

1. Remove the lower double nuts (from 4 points) from the suspending bolts.
2. Put the provided washers (tops and bottoms of suspending bracket covers) and suspending bracket covers through suspending bolts. ④
3. Tighten the nuts removed in step 1 for the suspending bolts.
   ・ Make sure that the suspending bracket covers are in close contact with the unit and ceiling.

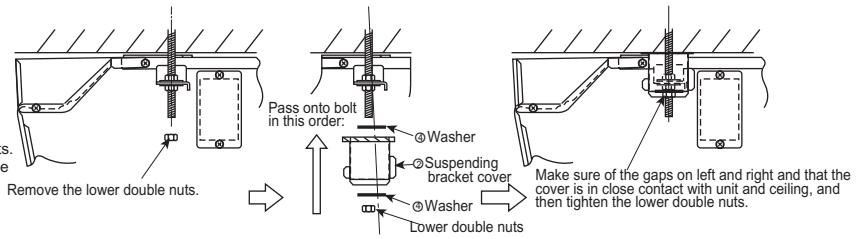

4. Test Run

※ Also refer to the installation manual of indoor unit.
★ Make sure that test run is performed without any abnormal sound, such as vibrations, fluttering sound, etc.

[Test Run Procedure]

1. Turn power on.
2. Press the TEST RUN button on remote controller twice.
3. Press the MODE button on remote controller to set to the fan mode.
   ∗ The fan will rotate to blow out air.
4. Make sure that no abnormal sound, such as vibrations, fluttering sound, etc. is heard.
5. Press the ON/OFF button on remote controller to release test run.
6. Turn power off.

MA & Contact Terminal Interface MAC-397IF-E

Photo

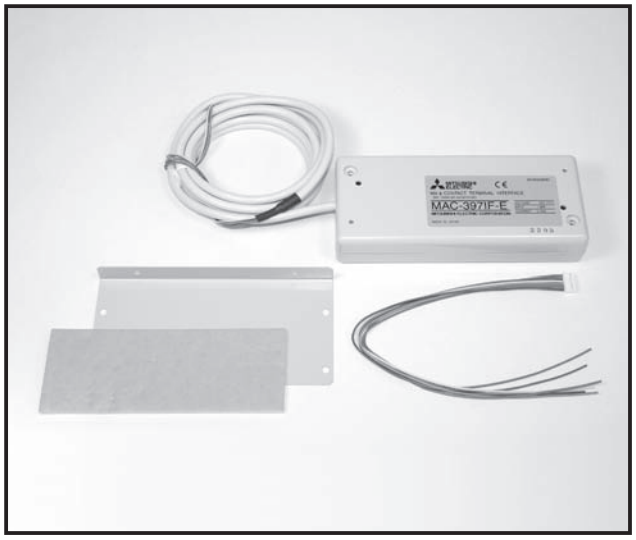

Descriptions

Enables to control multiple air conditioners from a (remote) location by connecting the On/Off contact point. It can also control the operation of the relay with error signals by connecting the MA remote controller PAR-21MAA.

Applicable Models

- MSZ-FD25/35/50VA(S)
- MSZ-GE22/25/35/42/50VA
- MSZ-GA60/71VA
- MFZ-KA25/35/50VA
- MLZ-KA25/35/50VA
- SEZ-KA
- SLZ-KA
- SEZ-KD
- P-series: In the case the outdoor unit is SUZ or MXZ, the indoor of P-series can be connected.

Specifications

Power		12V DC (supplied from indoor unit)
Operating conditions		Indoor only (ambient temperature: 0 to 40℃ , no condensation)
Connection of centralized controller	Communication cable	3-wire (recommended: microphone cord (MVVS) 0.3mm2)
	Communication cable distance	Max. 100m
Connection of MA smooth remote controller / MA deluxe remote controller	Communication cable	2-wire (recommended: optional PAC remote controller cable PAC-YT81HC)
	Communication cable distance	Max. 10m
Indoor unit connecting cable		Dedicated 5-wire cable
Weight		300g (including indoor unit connecting cable)

Dimensions

Unit : mm

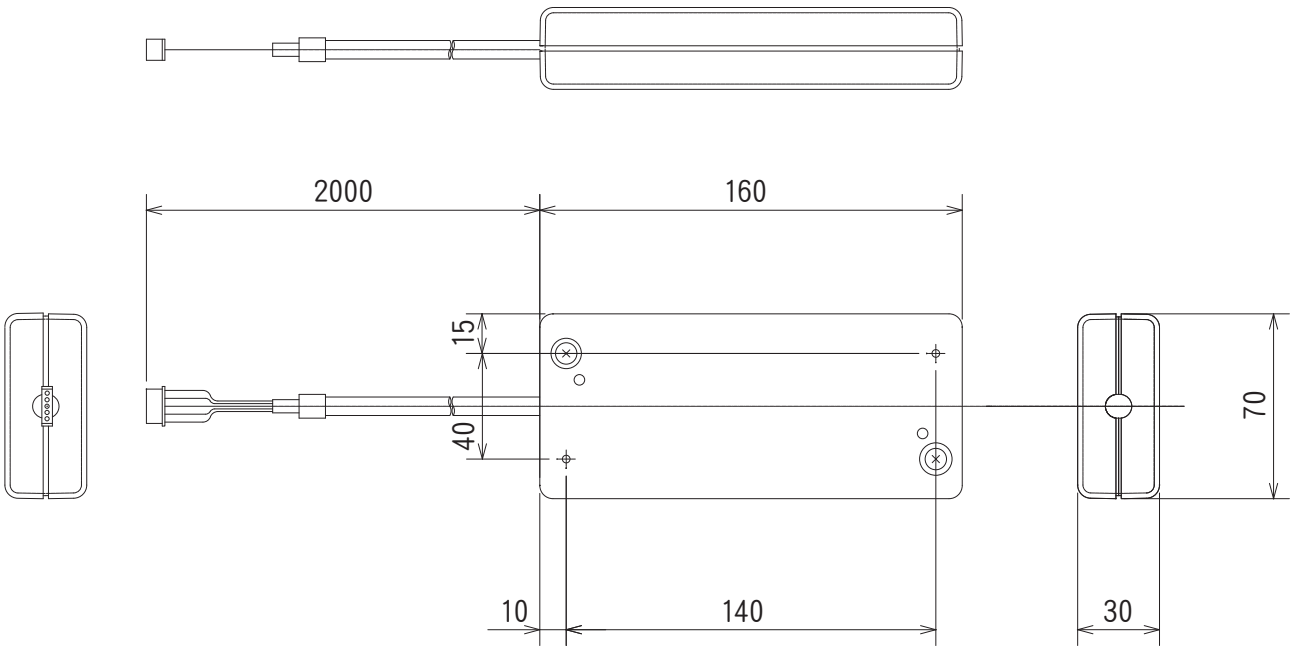

OPTIONAL PARTS

How to Use / How to Install

1. Before Installation

1.1. How to Use the MA & CONTACT TERMINAL Interface

■ **Functions**

Centralized control (Fig. 2-1)

You can turn multiple air conditioners on and off from one location. (MAC-821SC-E (8-Room))

Use as wired remote controller (Fig. 2-2)

You can use the MA remote controller as a wired remote controller. (PAR-21MAA)

Remote control (Fig. 2-3)

You can turn on and off an air conditioner from a remote location by connecting the ON/OFF contact point.

Status indicator output (Fig. 2-4)

You can control the operation of the relay with either of the on/off or error/ok status output signals.

■ **Sample System Configuration**

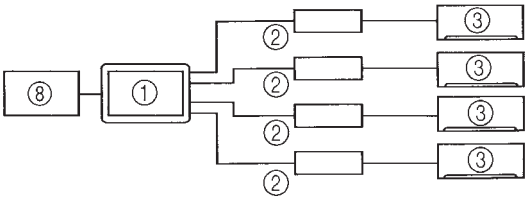

Fig. 2-1

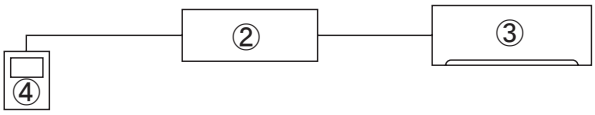

Fig. 2-2

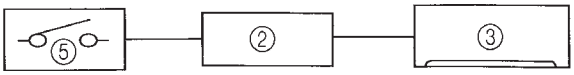

Fig. 2-3

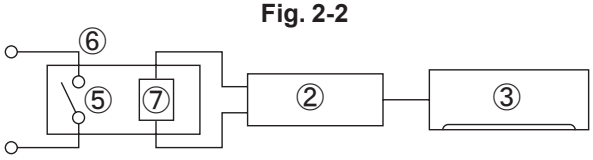

Fig. 2-4

① Centralized controller
② MA & CONTACT TERMINAL Interface
③ Indoor unit
④ MA remote controller
⑤ Contact point
⑥ Relay
⑦ Coil
⑧ Breaker

OPTIONAL PARTS

1.2. Parts

Before installing the unit, make sure that you have all the necessary parts.

■ Accessory

(1)	Interface unit	1
(2)	Wall mouniing brackets	1
(3)	Screws for mounting (2) 3.5 × 12	4
(4)	Cushioning material (with adhesive)	1
(5)	Mounting cord clamp (small)	1
(6)	Mounting cord clamp (medium)	2
(7)	Mounting cord clamp (large)	1
(8)	Screws for mounting (5)-(7) 3.5 × 12 * Use when attaching the clamps to the interface unit	1
(9)	Screws for mounting (6) 4 × 10 * Use this when mounting the clamps near the M series	1
(10)	Screws for mounting (6) 4 × 16 * Use when mounting the clamps and electrical wire mounting bracket	1
(11)	Cable tie	3
(12)	Fasteners (for joining the lead wires)	3
(13)	Wiring cord clamp	3
(14)	Screws for mounting (13) 3.5 × 12	3
(15)	Screws 3.5 × 12 (Spare)	2
(16)	Lead wires (6)	1

■ Items to Prepare at the Installation Site

(A)	Signal wire extension cable (if necessary)
(B)	Remote control wires (for connecting the MA Remote Controller) 2-corewire between 0.3 and 1.25mm^2.
(C)	Switch, relay, coin timer, etc. (if necessary) * Please use products with supplementary insulation.

Use wires which have insulation more than the MAX voltage.
* MAX voltage is defined according to the law of the country where the interface is used.

2.Connecting the MA & CONTACT TERMINAL Interface to Indoor Unit

・Connect the interface unit and the indoor control board using the connecting cable that came with the interface.
・Extending or shortening the connecting cable that comes out of the interface may cause it to malfunction. Also, keep the connecting cable as far as possible away from the electrical wires and ground wire. Do not bundle them together.

M series

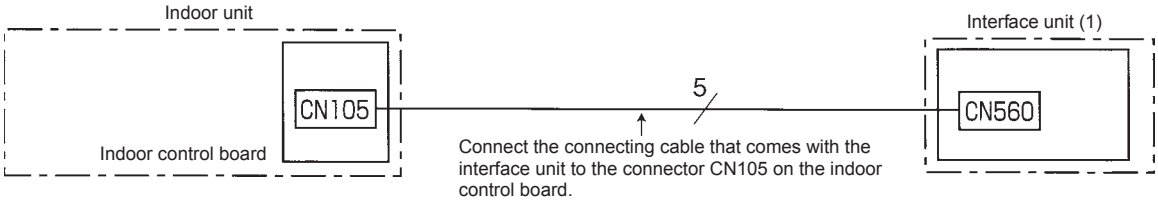

P/S series

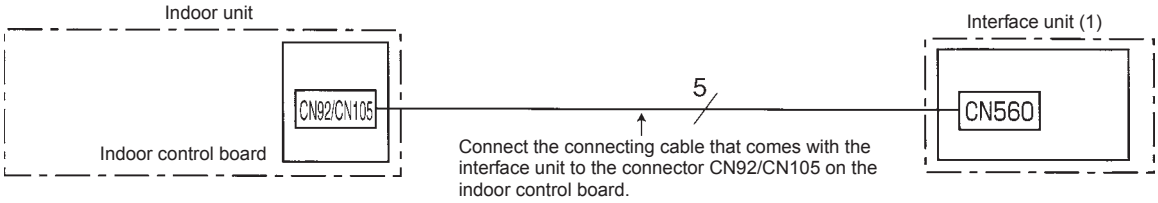

• When this interface unit is connected with indoor unit, timer operation cannot be set from a wireless remote controller.

3. Connecting the MA & CONTACT TERMINAL Interface with each system

(For details on each system, see the relevant instruction manual.)

- Screw the mounting cord clamp (5)-(7) according to the thickness of the connecting cable used for each system. Fasten the cable tie (11) as shown in the figure to prevent undesirable movement of the connecting cable.

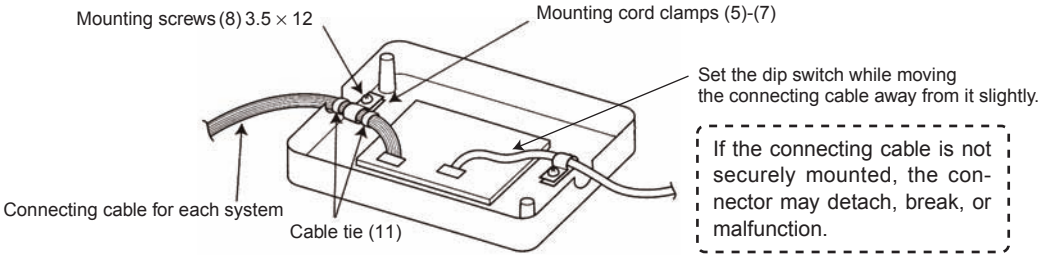

- The cables connected to the indoor unit should be mounted on or near the indoor unit.

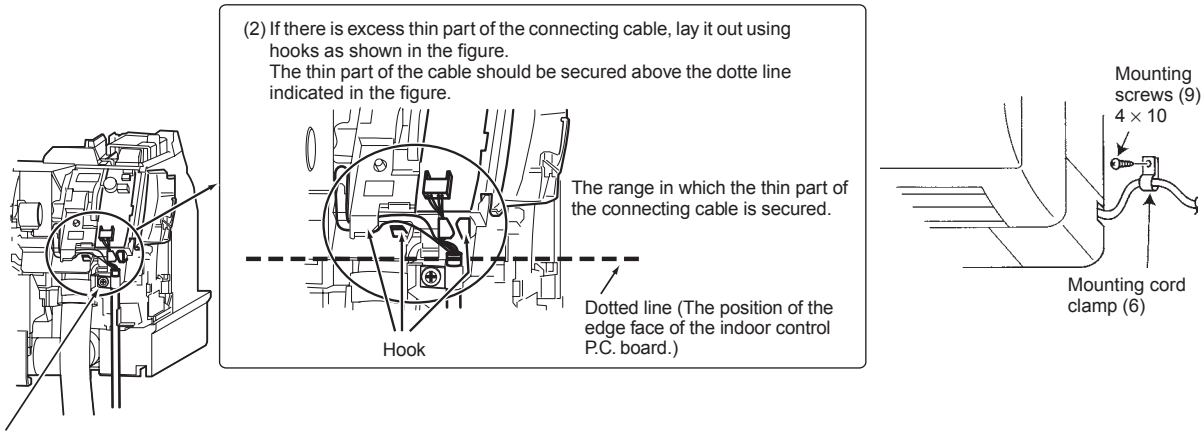

(1) Attach a mounting cord clamp (5)-(6) provided with the parts prepared at the installation site to the thick part of the connecting cable, and fix it with a screw 4 × 10 (9).

(3) Close the cover of the indoor control P.C. board. Reinstall the front panel and the lower right corner box.

- Set the interface dip switch (SW500–502) settings before turning on the power.
- If the interface dip switch (SW500–502) settings are not set correctly, the system will not function properly.

3.1. Centralized Control (When Connecting to a Centralized on-off remote Controller)

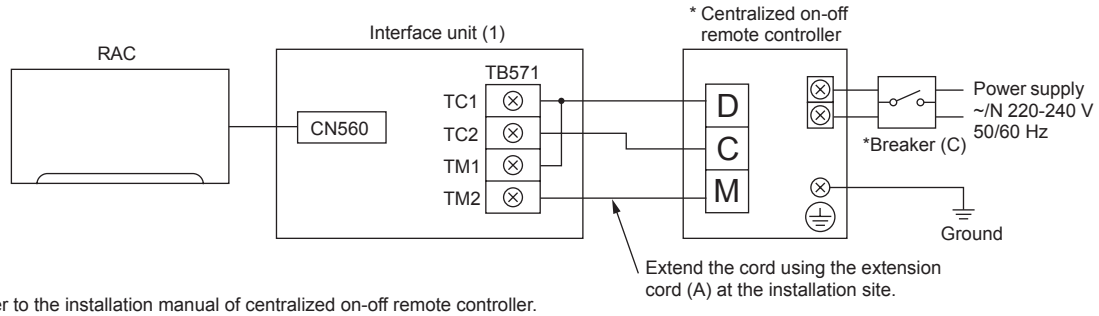

* Refer to the installation manual of centralized on-off remote controller.

Dip switch settings

■**SW500**

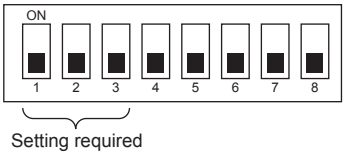

■**SW501 and SW502 do not have to be set.**

SW501

SW502

OPTIONAL PARTS

3.2. Use as a Wired Remote Controller (Using the MA Remote controller)

Note:

1. **Be sure to set the "Auto Heating/Cooling Display Setting" of the MA remote controller OFF before use. When the setting is turned ON, the remote controller display may differ from the actual operating status of the unit.**
   - **For details on the "Auto Heating/Cooling Display Setting," refer to the MA remote controller instruction manual.**
2. **A test run cannot be initiated using the test run switch on the MA remote controller.**
3. **The horizontal vanes on the unit cannot be operated using the louver switch.**
4. **The range of room temperature indication is between 10°C and 38°C.**

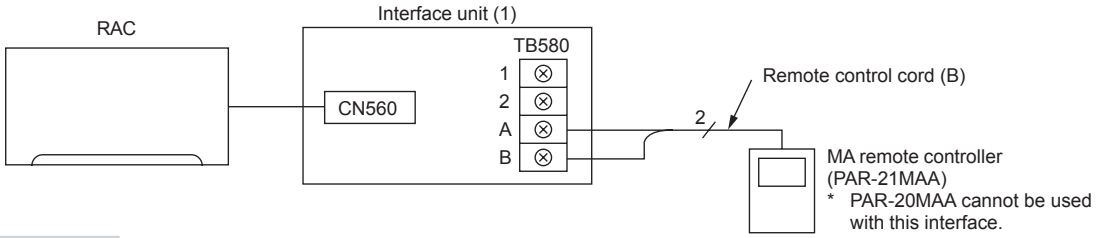

Dip switch settings

■ **SW500 does not have to be set.**

■ **SW501:**

SW501- No. 1-4: Refrigerant address

・Set this switch when multiple indoor units (and interfaces) are connected to a single MA remote controller.
・Always start the refrigerant address at "0".
・Even when connecting multiple outdoor units, set a different refrigerant address for each indoor unit.

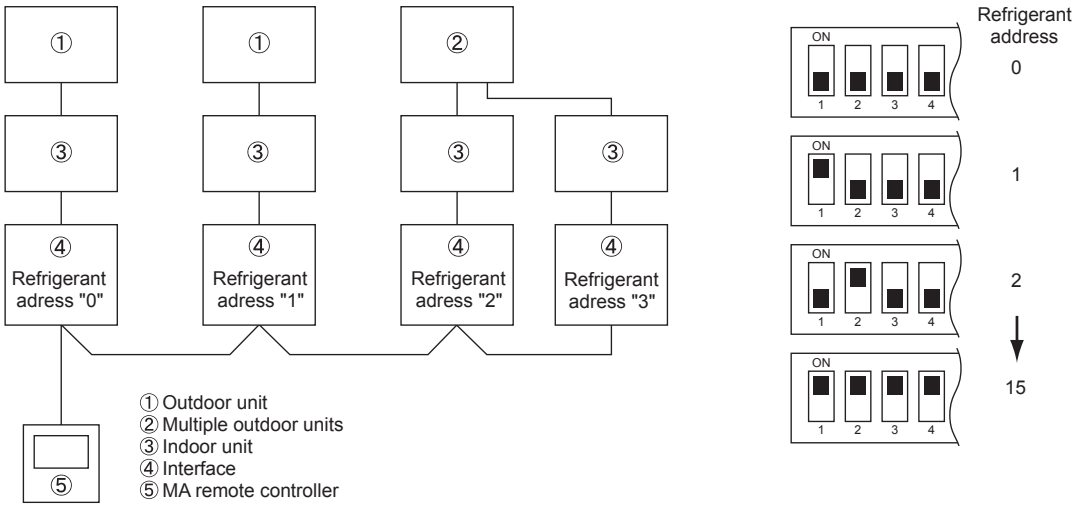

SW501- No. 5-6

M series

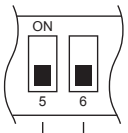

No. 5 and 6 should normally be set to OFF.
Under the following conditions, however, they should be switched to ON.

→ Only turn this ON when the indoor units in the same group include models where the MA remote controller and indoor unit are directly connected.

→ Set them to ON only when using the room temperature sensor installed in the MA remote controller.
* This can be switched when an accurate room temperature cannot be detected by the air conditioner unit. MSZ-GA Series models can not use a room temperature sensor on their MA remote controllers. (Some M series models will not allow the use of the MA remote controller room temperature sensor.)

■**SW502:**

・Set this switch based on the functions of the indoor unit connected to the interface.
・See the table of “Air conditioner Function Settings” for SW502 and set the switch after checking the functions using the wireless remote control that came with the indoor unit.

3.3. Remote Control (Turning Indoor Unit On and Off from the Contact Point)

・You can turn indoor unit on and off using an on/off switch like a light switch.
・Connect the supplied lead wires (6) (16) to the connector CN591 on the interface board.
・Wire the remote control components, including the switches, at the installation site.
・Please use extension cords with reinforced insulation.

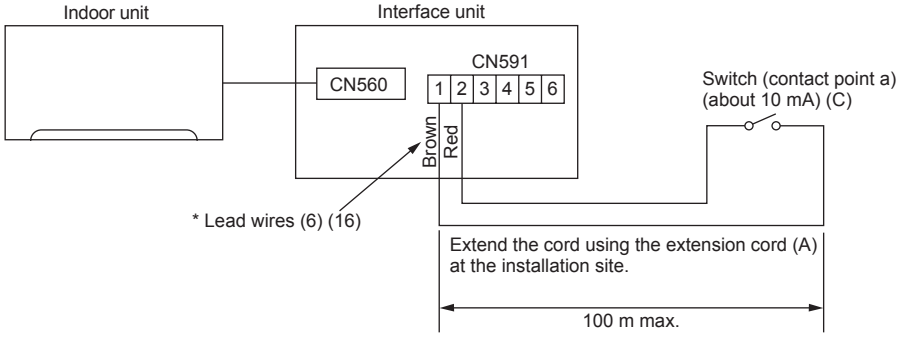

・When the switch contact point is closed (ON), the air conditioner will turn on, and when the switch contact point is open (OFF), the air conditioner will turn off.

* When connecting the connector and the lead wire, connect them using a closed end connector as shown below.

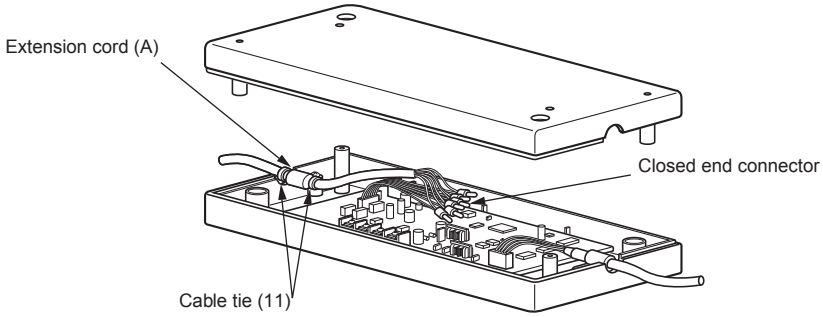

Dip switch settings

■**SW500**

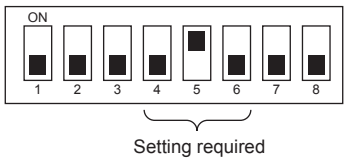

■**SW501 and SW502 do not have to be set.**

OPTIONAL PARTS

3.4. Restricting Indoor Unit Operations from the Contact Point

- You can use a coin timer or light switch to ensure that indoor unit will not operate.
- Connect the supplied lead wires (6) (16) to the connector CN591 on the interface board.
- Wire the remote control components, including the coin timers or switches, at the installation site.
- Please use extension cords with reinforced insulation.

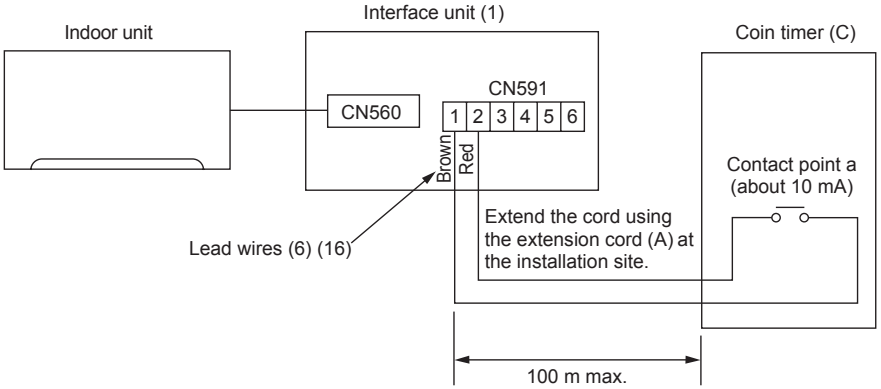

* When the contact point is open, the unit will turn off and will not be operable from the remote control.
When the contact point is closed, the unit will turn on and will be operable from the remote control.

Dip switch settings

■ **SW500**

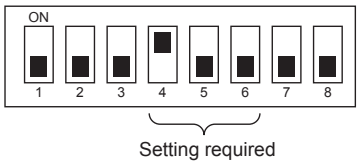

■ **SW501 and SW502 do not have to be set.**

3.5. Status Signal Output Using the Relay

- You can set the external relay to ON/OFF based on whether the indoor unit is set to either on/off or error/ok.
- Set up and wire the relay and extension cables at the installation site.
- Please use relays with reinforced insulation.

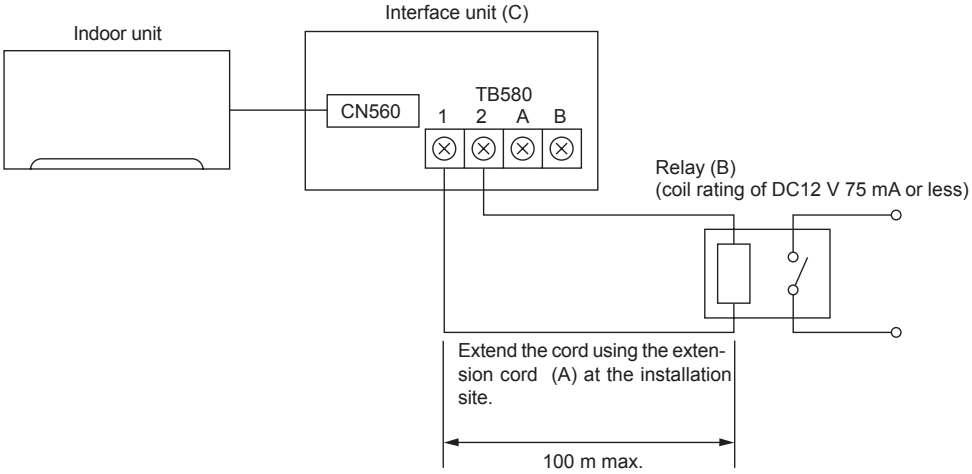

OPTIONAL PARTS

Dip switch settings

■ **SW500**

1. When outputting the indoor unit ON/OFF

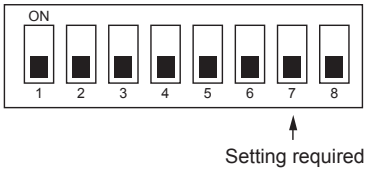

The relay is ON when the unit is running, and OFF when it is not.

2. When outputting the indoor unit ERROR/OK

The relay is ON when an error has occurred, and OFF when the unit is functioning properly.

■ **SW501 and SW502 do not have to be set.**

4. Dip Switch Details

• SW500 - Input/Output Mode Settings

SW No.	Functions	OFF	ON	Comments
No. 1	Not in use	Set to OFF	-	Be sure to set these to OFF (When set to OFF, the unit cannot communicate with the air conditioner).
No. 2	HA terminal (CN504) input switch	Pulse input	Continuous input	There is a switch between TC1 and 2 input on the TB571.
No. 3	HA terminal (CN504) output switch	Static mode	Dynamic mode	
No. 4	Remote control (CN591) mode switch 1	See the next page	See the next page	
No. 5	Remote control (CN591) mode switch 2			
No. 6	Remote control (CN591) mode switch 3			
No. 7	Relay, extermination output mode switch	ON/OFF output	ERROR/OK output	When there is a problem while the unit is running, it will output a relay ON signal.
No. 8	Turn ON/OFF with power option	Turn ON/OFF with power: No (unit remains OFF when the source power is turned ON)	Turn ON/OFF with power: Yes (Returns the unit to the status (ON/OFF) it was in before the power was turned OFF)	When the Auto Restart function on the air conditioner itself is set to ON, be sure to set these to OFF.

Remote control (CN591) mode switch

SW 500			Functions	Operating Details
No. 4	No. 5	No. 6		
OFF	OFF	OFF	Do not use the CN591 remote control	-
OFF	OFF	ON	ON/OFF Prohibited/Allowed mode 1	Manual operations prohibited when CN591 No. 1 and No. 3 are closed, permitted when open. Only when No. 1 and No. 3 are closed and manual operations are prohibited. On when CN591 No. 1 and No. 2 are closed, off when open. (Cannot be operated from the remote control when manual operations are permitted. Only valid when operated from the CN591.)
OFF	ON	OFF	ON/OFF Prohibited/Allowed mode 2 (level input)	On when CN591 No. 1 and No. 2 are closed, off when open. Manual operations prohibited when No. 1 and No. 3 are closed, permitted when open. (Cannot be operated from the remote control when manual operations are permitted. Only valid when operated from the CN591.)
OFF	ON	ON	ON/OFF Prohibited/Allowed mode 3 (pulse input)	On when CN591 No. 1 and No. 2 are closed, off when No. 1 and No. 3 are closed. Manual operations prohibited when No. 1 and No. 4 are closed, and permitted when No. 1 and No. 5 are closed. (Same as when they are open.)
ON	OFF	OFF	Coin timer mode 1 (for a no-voltage contact point a)	Permitted and on when CN591 No. 1 and No. 2 are closed, manual operations prohibited and off when open. (When permitted, the unit can be operated from the remote control.)
ON	OFF	ON	Coin timer mode 2 (for a no-voltage contact point b)	Manual operations prohibited and off when CN591 No. 1 and No. 2 are closed, permitted and on when open. (When permitted, the unit can be operated from the remote control.)
ON	ON	OFF	Cooling-Heating/Temperature settings mode 1 (3 temperature patterns)	On when CN591 No. 1 and No. 2 are closed, off when open. When No. 1 and No. 3 are closed 20℃ When No. 1 and No. 4 are closed 24℃ When No. 1 and No. 5 are closed 28℃ (When multiple switches No. 3, 4, and 5 are closed, the highest temperature will be selected.) Heat when No. 1 and No. 6 are closed, cool when open. (Remote control operations are valid as always.)
ON	ON	ON	Cooling-Heating/Temperature settings mode 2 (8 temperature patterns)	On when CN591 No. 1 and No. 2 are closed, off when open. No. 1 and No. 3 / No. 4 / No. 5 / Temperature settings Open / Open / Open / 16℃ Closed / Open / Open / 18℃ Open / Closed / Open / 20℃ Closed / Closed / Open / 22℃ Open / Open / Closed / 24℃ Closed / Open / Closed / 26℃ Open / Closed / Closed / 28℃ Closed / Closed / Closed / 30℃ Heat when No. 1 and No. 6 are closed, cool when open. (Remote control operations are valid as always.)

■ SW501: Settings when connecting an MA remote controller

SW No.	Functions	OFF	ON	Comments
No. 1 No. 2 No. 3 No. 4	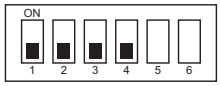 Refrigerant address 0			Only specify these settings when connecting an MA remote controller.
	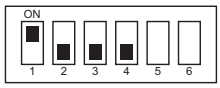 Refrigerant address 1			
	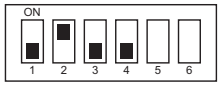 Refrigerant address 2			
	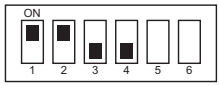 Refrigerant address 3			
	 Refrigerant address 4			
	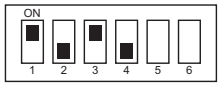 Refrigerant address 5			
	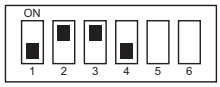 Refrigerant address 6			
	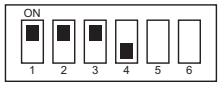 Refrigerant address 7			
	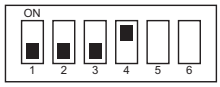 Refrigerant address 8			
	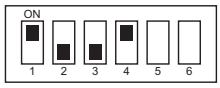 Refrigerant address 9			
	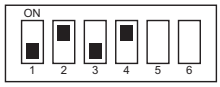 Refrigerant address 10			
	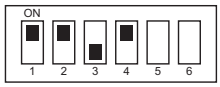 Refrigerant address 11			
	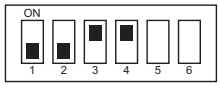 Refrigerant address 12			
	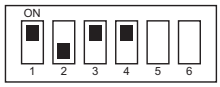 Refrigerant address 13			
	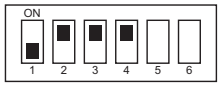 Refrigerant address 14			
	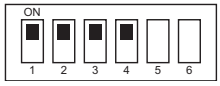 Refrigerant address 15			
SW No.	Functions	OFF	ON	Comments
No. 5	Room temperature detector	Indoor unit	Remote control	This should normally be set to OFF.
No. 6	MA remote controllers are directly connected to indoor units within the same group.	Not mixed	Mixed	

OPTIONAL PARTS

■ SW502 : Air Conditioner Function Settings

(Set this switch based on the functions of the M series connected to this device.)

M series

SW No.	Functions	OFF	ON	Comments
No. 1	Availability of a heating mode	Combined cooler and heater	Cooling unit only	–
No. 2	Not in use	–	–	Permanently set to ON.
No. 3	Not in use	–	–	Permanently set to ON.
No. 4	Not in use	–	–	Permanently set to ON.
No. 5	Not in use	–	–	Permanently set to OFF.
No. 6	Not in use	–	–	Permanently set to OFF.
No. 7	Not in use	–	–	Permanently set to OFF.
No. 8	Availability of a fan (Cooling model only)	Has a fan or mode OFF	No fan or mode ON	–

P/S series

SW No.	Functions	OFF	ON	Comments
No.1	Cooling only type/Heat pump type	Heat pump type	Cooling only type	Set the mode in accordance with the operation manual for the indoor unit.
No.2	Auto mode	Not available (setting No. 3 disabled)	Available (setting No. 3 enabled)	Heat pump type : Set to ON. Cooling only type : Set to OFF.
No.3		Available (unit)	Available (remote controller)	Set to OFF.
No.4	Fan speed	4 speeds	3 speeds (2-speed model set ON)	When operating a 2-speed model with the 3-speed setting (ON), the MA remote controller display will indicate 3 fan speeds. The table below shows the displays and the actual outputs at that time. Display / Meaning / Indoor unit output Low speed / Low speed Medium speed / High speed High speed / High speed
No.5	Vane	Available	Not available	The Vane function of either of indoor unit : When the function is provided, it is Available (OFF). When the function is not provided it is Not available (ON).
No.6	Swing	Available	Not available	The Swing function of either of indoor unit : When the function is provided, it is Available (OFF). When the function is not provided, it is Not available (ON).
No.7	Not in use	–	–	Permanently set to OFF.
No.8	Fan mode	Not available	Available	Set to ON.

* Fan speed 2 step model : An actual fan speed is 2 step though the display of remote controller becomes 4 step or 3 step.

5. Test Run (Check Operations)

■ Interface status monitor

You can check the status of the interface by the LED lamp on the interface unit board.

LED lamp no.	Lamp off	Lamp on	Blinking
LED521	DC 12 V is not being supplied from the air conditioner.	DC 12 V is being supplied from the air conditioner.	–
LED522	Device is not communicating properly with the air conditioner.	–	Blinking at approx. 1 second intervals: Device is communicating normally with the air conditioner.
LED523	Device is not communicating properly with the MA remote controller.	–	Blinking at approx. 8 second intervals: Device is communicating normally with the MA remote controller.

* Use the table above to check the device operations.

6. Mounting the MA & CONTACT TERMINAL Interface Unit

When mounting the interface to the back-side dent of MFZ-KA model, be sure to apply insulation material to prevent condensation from forming.
The Interface unit should be placed in a location where the connecting cable from the interface can reach an indoor unit.
The device will not function properly if the connecting cable is extended so the connecting cable should not be extended.
Mount the interface unit securely to a pillar or wall using 2 or more screws.

■**When Using Wall Mounting Brackets**(2)

1 Attach the wall mounting brackets (2) to the interface unit (1) using 2 mounting serews (3).

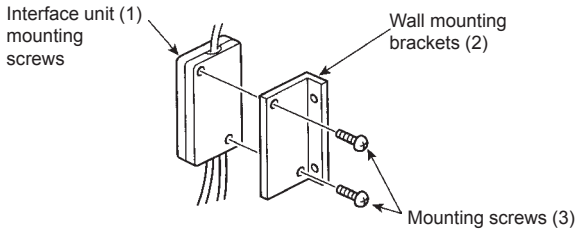

2 Mount the unit to a pillar or wall using 2 mounting screws (3).

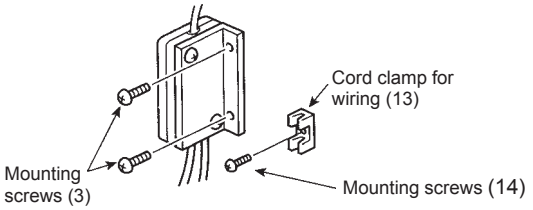

■**When Mounting Directly to a Wall**

Mount the interface unit (1) case to the wall using the mounting screws (3).

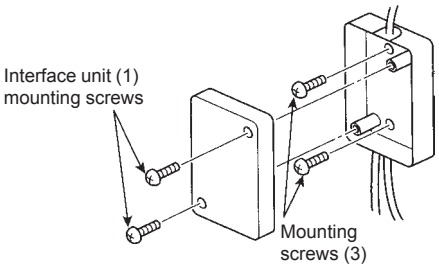

* When mounting the interface unit (1) using a cushioning material (4), be sure to mount it in a location where it will not fall.

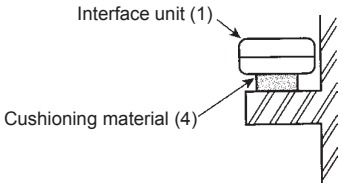

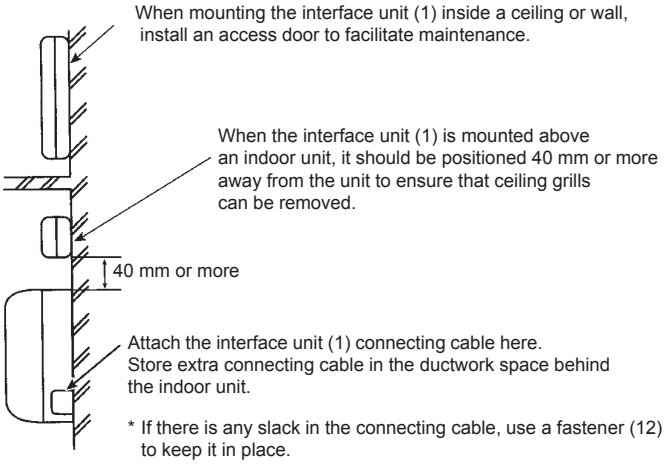

7. Specifications

Input voltage	12 V ⎓
Power consumption	2 W
Input current	0.15 A

OPTIONAL PARTS

Photo

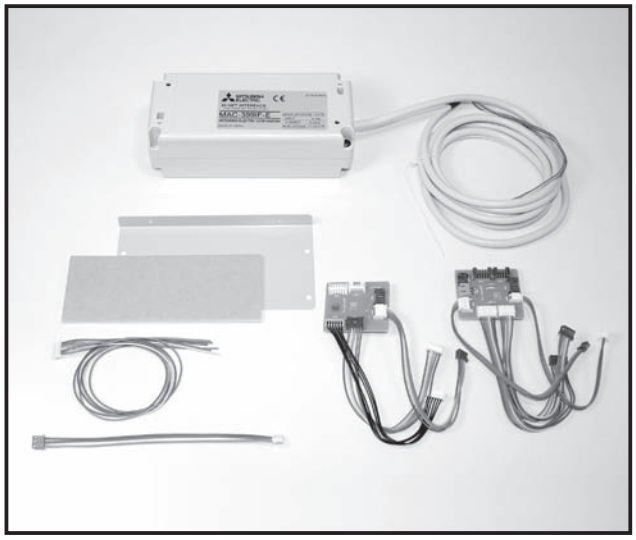

Descriptions

Enables centralized and individual control of M series and S series models with new-A control using M-NET.

Applicable Models

- MSZ-FD25/35/50VA(S)
- MSZ-GE22/25/35/42/50VA
- MSZ-GA60/71VA
- MFZ-KA25/35/50VA
- MLZ-KA25/35/50VA
- SEZ-KA
- SLZ-KA

Specifications

Power	12V DC (supplied from indoor unit)
Operating conditions	Indoor only (ambient temperature: 0 to 40℃ , no condensation)
Indoor unit connecting cable	Dedicated 5-wire cable
Weight	350g (including indoor unit connecting cable)

Dimensions

Unit : mm

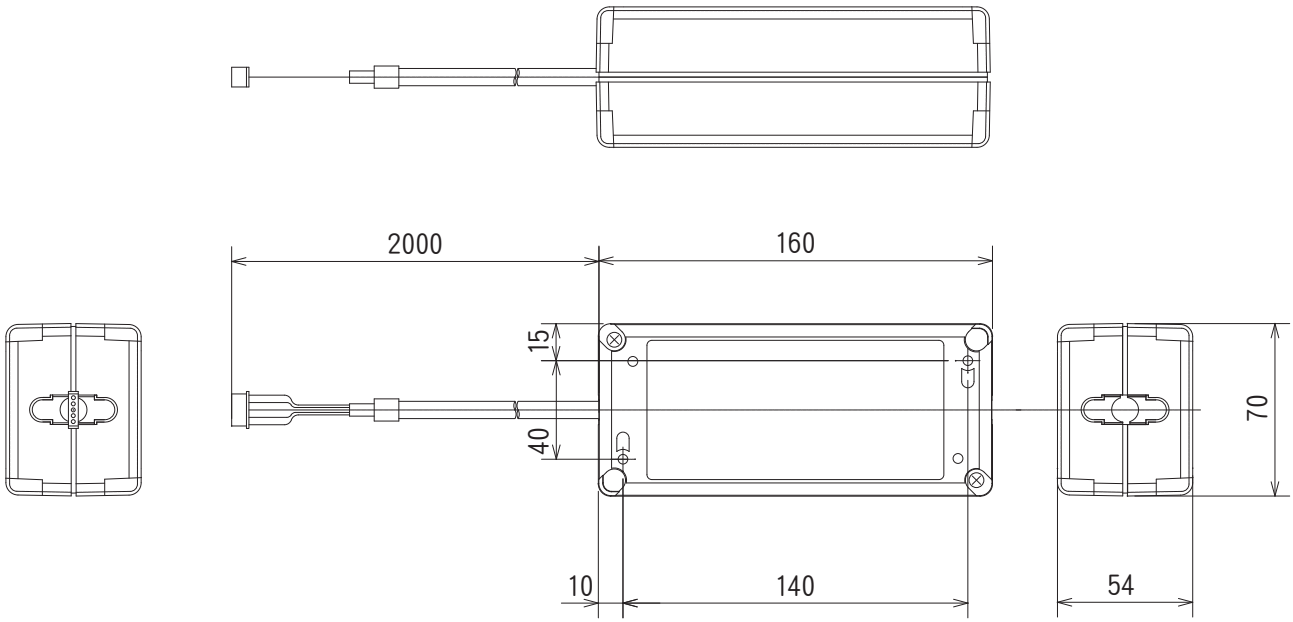

How to Use / How to Install

1. Before Installation

1.1. How to Use the M-NET Interface

⚠ Caution

When using a packaged air conditioner (city-multi) system remote controller, you cannot register packaged air conditioners and room air conditioners in the same group. In this case, register the Packaged and room air conditioner in different groups.

■ Functions

Centralized and individual management of M/P/S series using M-NET(*).

* A type of packaged air conditioner control (city-multi)

■ Related Products Sold Separately

- ME Remote Controller PAR-F27MEA
- Centralized Controller G-50A
- System Remote Controller PAC-SF44SRA
- ON/OFF Remote Controller PAC-YT40ANRA
- Schedule Timer (M-NET) PAC-YT34STA
- Power supply unit PAC-SC50KUA

■ Sample of System Configuration (only M/S series outdoor-unit)

Sample configuration of a system using a centralized controller

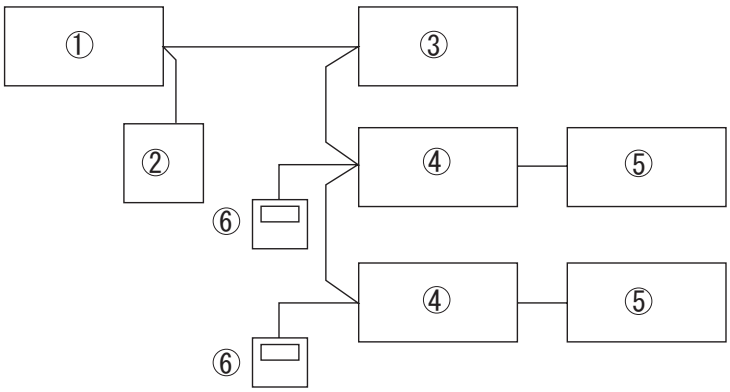

1 Centralized controller (M-NET)
2 Power supply unit
3 Packaged air conditioner system
4 M-NET Interface
5 Indoor unit
6 ME Remote Controller

* The number of units that can be connected to the centralized controller (G-50A) is max. 50, including packaged and room air conditioners. The wiring from the M-NET Interface to the centralized controller can have a maximum length of 500 m. The wiring from the M-NET Interface to the ME Remote Controller can have a maximum length of 10 m.
For details, see the MELANS Catalog and the instruction manuals for the Centralized Controller and ME Remote Controller.

1.2. Accessory

Before installing the device, make sure you have all the necessary parts.

■ Accessory

❶	Interface unit (with 5-core connecting cable)	1
❷	Mounting brackets	1
❸	Screws for mounting ❷ 3.5×12	4
❹	Cushioning material (with adhesive)	1
❺	Cord clamp for mounting (small)	2
❻	Mounting cord clamp (large)	2
❼	Screws for mounting ❺ and ❻ 3.5×12	2
❽	Screw for mounting ❺ and ❻ 4×10 * Use this when mounting cord clamp to and around M series.	1
❾	Screw for mounting ❺ and ❻ 4×16 * Use this when mounting cord clamp together with the parts of M series.	1
❿	Cable ties	4
⓫	Fasteners (for joining the lead wires)	5
⓬	Cord clamp for wiring	5
⓭	Screws for mounting ⓬ 3.5×12	5
⓮	Interface case mounting screws 3.5×12	2

■ Items to Prepare at the Installation Site

Ⓐ	Connection wiring (centralized controller) Shield wiring CVVS/CPEVS
Ⓑ	Connection wiring (for connecting the ME Remote Controller) Remote control wires (2-core sheath wire 0.3 mm^2)
Ⓒ	Related parts sold separately * Prepare the necessary number of parts sold separately as needed for your system.

* CPEVS; PE insulated PVC jacketed shielded communication cable
* CVVS; PVC insulated PVC jacketed shielded control cable
PE: Polyethylene PVC: Polyvinyl chloride

2. Mounting the M-NET Interface Unit

The M-NET Interface unit should be placed in a location where the 5-core connecting cable from the interface can reach an indoor unit. Do not extend the 5-core connecting cable. This will cause the device to malfunction.
Mount the interface unit securely to a pillar or wall using 2 or more screws.

■ When Using Wall Mounting Brackets 2

1 Attach the wall mounting brackets 2 to the interface unit 1 using 2 mounting screws 3 .

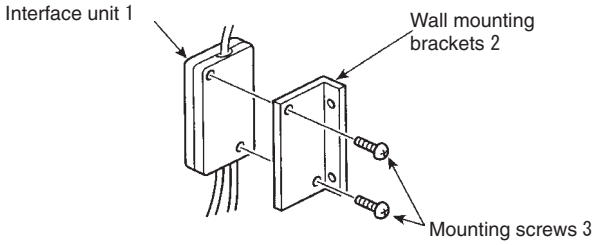

2 Mount the unit to a pillar or wall using 2 mounting screws 3 .

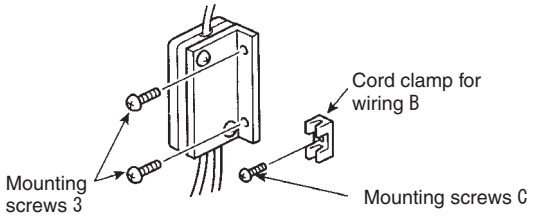

■ When Mounting Directly to a Wall

Mount the interface unit 1 case to the wall using the mounting screws 3 .

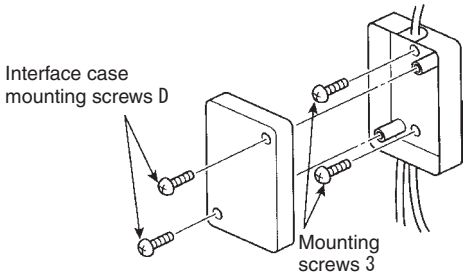

* When mounting the interface unit 1 using a cushioning material 4 , be sure to mount it in a location where it will not fall.

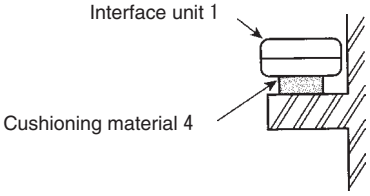

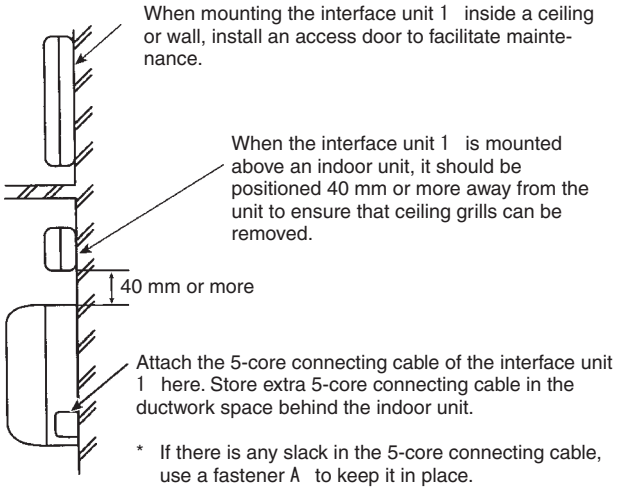

OPTIONAL PARTS

3. Setting the Switches

If the system is not configured correctly, the unit will not function properly. You may be unable to control the functions of the RAC from the System Controller/ME Remote Controller or functions not available on your RAC could appear on the System Controller/ME Remote Controller display. You should therefore ensure that the system is properly configured before connecting the power supply.

■ SW500 No. 1, No. 2 - Not in use
These should be set to OFF (if set to ON, the device will not communicate properly with the System Controller).

■ SW500 No. 3 - Power On/Off Settings
This setting indicates whether the RAC should be turned off or on when power is supplied to the RAC or M-NET Interface.

Turn on with power No
[Unit remains off when the power is supplied.]

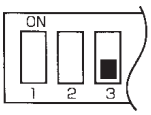

Turn on with power Yes
[Unit turns on when the power is supplied.]

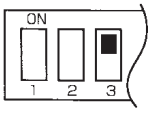

■ SW500 No. 4 - Availability of RAC purifier or fan mode
If there is no "Purifier" button on the wireless remote control, and if the word "Fan" does not appear when the "Mode" button is pressed, the purifier and fan modes are not available (set to OFF).

Does not have a purifier or fan mode

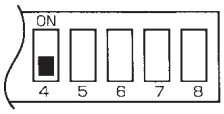

Has a purifier or fan mode

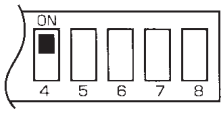

■ SW500 No. 5ÐNo. 8 - RAC Function Check

SW500	Function description	How to check a function	OFF	ON
No. 5	Availability of automatic operation mode (a mode that allows the air conditioner to determine whether to select cooling or heating).	If "Auto" is not displayed when you push the "Mode" button on the wireless remote control, the auto operation mode is not available (OFF).	Does not have an auto operation mode	Does have an auto operation mode
No. 6	Availability of a fan oscillation setting	If "Oscillate" is displayed when you push the "Fan Direction" button on the wireless remote control, the fan oscillation setting is available (OFF). (If there is no "Fan Direction" button, the setting is OFF.)	Has a fan oscillation setting	Does not have a fan oscillation setting
No. 7	Availability of a fan direction setting	If there is a Fan Direction button on the wireless remote control, the fan direction setting is available (OFF).	Has a fan direction setting	Does not have a fan direction setting
No. 8	Availability of a heating mode	If "Heat" appears when you push the "Mode" button on the wireless remote control, the unit is a model that offers both cooling and heating (OFF).	Dual cooling and heating model	Cooling unit only

■ SW510, SW501 - Address settings
Specifies the address settings for centralized management (address settings can be set from 01-50).

Self-Address

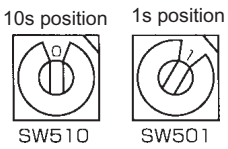

SW510 sets the 10s position of the address and SW501 sets the 1s position of the address.
For example, to set a unit to the address 25, set SW510 to "2" and SW501 to "5".

■ **Position of SW500, SW501, SW510**

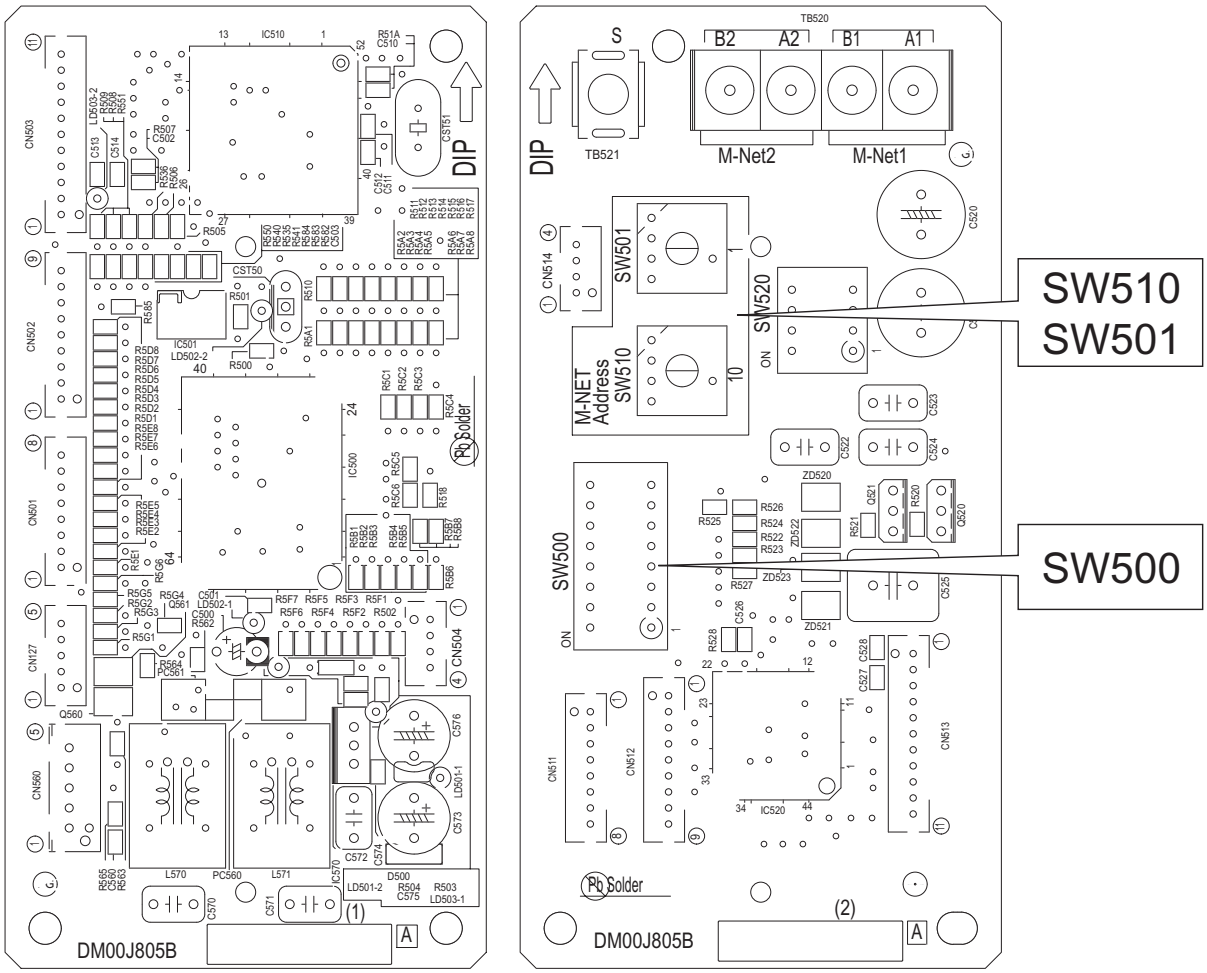

4. Connecting the M-NET Interface

Connect the M-NET Interface board to the RAC indoor control board.

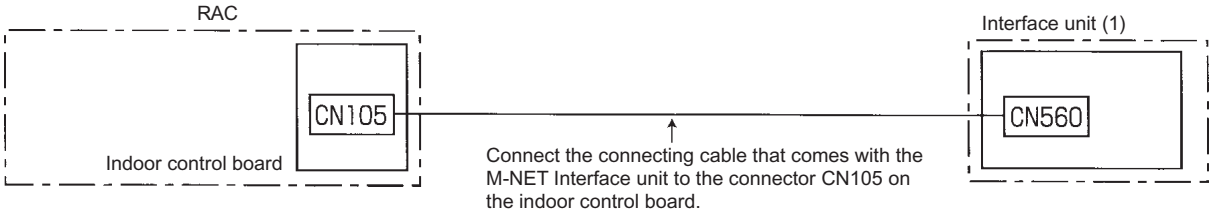

・The cables connected to the RAC should be mounted on or near the RAC.
If the connecting cable is not securely mounted, the connector may detach, break, or malfunction.

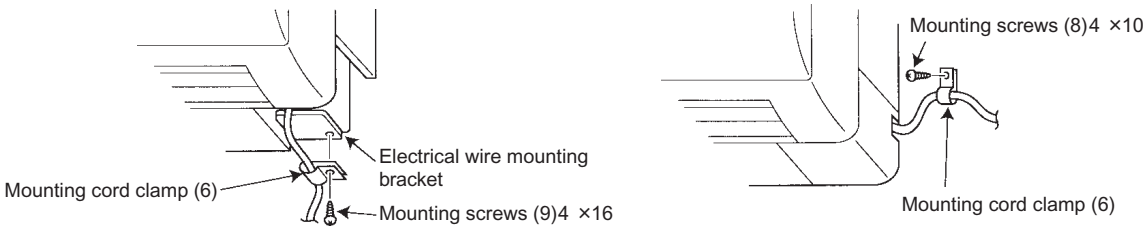

OPTIONAL PARTS

5. Connecting the M-NET Interface, the Power Supply, and the ME Remote Controller

- When connecting the unit to a system controller or ME Remote Controller, connect the transmission line of the M-NET to the control signal terminal.
  Connect the 2-core connection wrings (A) to A1/B1 or A2/B2 (they can be connected to either).
- Cross the shield portion of each connecting wire using the S terminal only when cross wiring the connection wires.
- When connecting the connection wrings (A) and the ME Remote Controller connection wrings (B) to the terminal board, there is no need to worry about polarity.

When the connection wrings (A) are not cross-wired

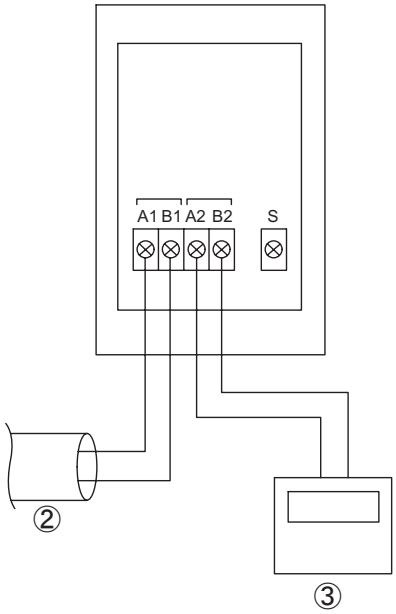

When the connection wrings (A) are cross-wired

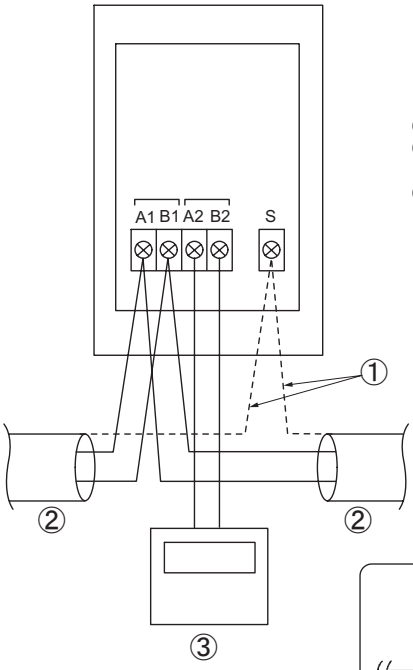

① Shield
② Connection wirings (A) (M-NET transmission wire)
③ ME Remote Controller (only when needed)

Bare wire size

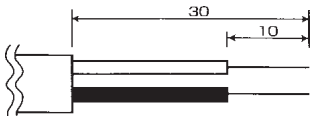

- After completing the wiring, securely affix a cord clamp to each electrical wire.

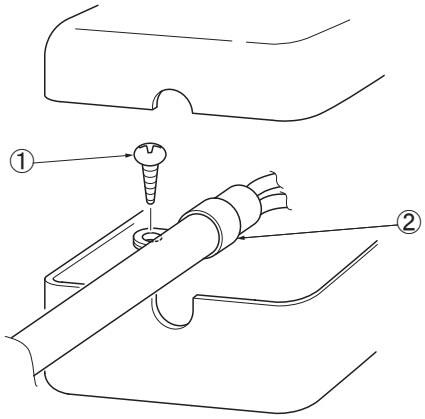

When the connection wrings (A) are cross-wired

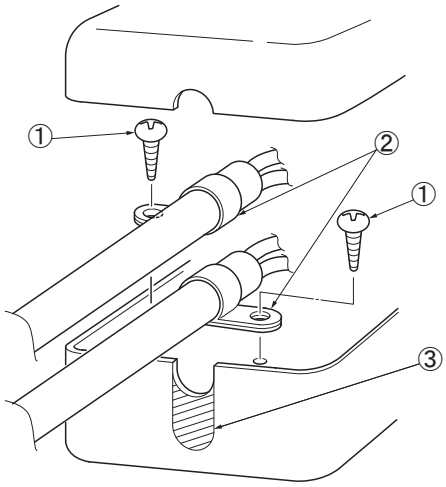

① Screws
② Cord clamp (large)
③ Cut with nippers at the notches.
Make sure the cut surface is free of any burr so that the connection wire dose not get damaged.

⚠ Caution

- **Electrical work should be performed in accordance with the Technical Standards Regarding Electrical Equipment and the Interior Wiring Standards.**
- **Connection wiring and remote control wiring should be located as far away from other electrical wiring as possible. Placing them too closely together could cause a malfunction.**

6. Notes Regarding Use

Please read this information carefully before attempting a test run.
The following control information should be thoroughly explained and provided to the users of this device. (Please provide these instructions to the user once the installation is complete.)

* This M-NET Interface operates RACs using the controls of a packaged air conditioner (city-multi), but there are several limitations imposed as a result of the functional differences between RACs and packaged air conditioners.

1. When operating the system using a system controller or ME Remote Controller, these operations will not appear on the display of the wireless remote controller.
2. The dehumidifying modes of individual RACs cannot be operated using the ME Remote Controller/System Controller. When an independent dehumidifying mode is set using the remote controller that came with the RAC, "Dry" will appear on the display because there is no corresponding mode on the ME Remote Controller/System Controller.
3. Functions that are available on the ME Remote Controller/System Controller but that are not available on the RAC can be operated by switching to a predetermined separate operation mode. (See the "Table of RAC Functions Activated from the ME Remote Controller/System Controller.")
4. Functions that are available on the remote controller of the RAC but are not available on the ME Remote Controller/System Controller will produce a predetermined display. In this case, the actual operation and the display may differ. (If the fan speed is automatically set using the remote controller that came with the RAC, the setting "High" will appear on the ME Remote Controller/System Controller. Likewise, if the fan direction is set to automatic, the setting "Downward Air Flow 80%" will appear on the ME Remote Controller/System Controller.)
5. Because the temperature range of the RAC is broader than the ME Remote Controller/System Controller, when the RAC is set to lower than 17°C or higher than 30°C, the temperature display on the ME Remote Controller/System Controller will show the minimum or maximum temperature that can be set. (For example, even if the room air conditioner is set to cool a room to 16°C, the display on the ME Remote Controller/System Controller may read "17°C.")
   The RAC operates according to the room temperature detected by the RAC unit.
6. Timer operations should be set using only the remote controller that came with the RAC or the ME Remote Controller/System Controller. If both are used to set the timer to the same time, the timer will not function properly.
7. When the timer is set using the remote controller that came with the RAC, the timer information will not be displayed on the ME Remote Controller/System Controller.
8. If the timer is set using the ME Remote Controller/System Controller, the timer set using that device will not be cancelled even if the unit is turned off using the remote controller that came with the RAC.
9. When manual operations using the system controller are prohibited, the remote controller that came with the RAC will not function, but the beeping sound that is emitted when it is operating normally will still sound.
10. To clear an error message from the display of the ME Remote Controller/System Controller, briefly turn off the unit using the ME Remote Controller/System Controller or the remote controller that came with the RAC. (The error display on the air conditioner unit may be cleared automatically, but it will not clear from the ME Remote Controller/System Controller until the unit is turned off.)
11. The room temperature sensor installed in the ME Remote Controller cannot be used.

7. Table of RAC Functions Activated from the ME Remote Controller/System Controller

This table shows the RAC functions that can be activated by the ME Remote Controller/System Controller.

	ME Remote Controller/System Controller operations/display	RAC response
Power	On/Off	On/Off
Mode	Fan	Fan
	Auto Cool	Cool
	Auto Heat	Heat
	Cool	Cool
	Heat	Heat
	Dry	Dry
Temperature settings	17-30 °C	17-30 °C
Fan speed settings	Low	Low
	Medium 1	Low
	Medium 2	Medium
	High	High
Air directional settings	Position 1 (Horiz.)	Position 1 (Horiz.)
	Position 2	Position 3
	Position 3	Position 4
	Position 4	Position 5
	Swing	Swing

* Some items may not be displayed, depending on the switch settings.
* When operating the unit using the remote controller that came with the RAC, the operation shown on the remote is the one that will be activated on the actual RAC unit. In this case, the information shown on the display of the ME Remote Controller/System Controller may not accurately reflect the unit's actual operations (see the "Notes Regarding Use").

Centralized On/Off Remote Controller MAC-821SC-E*

*MAC-397IF-E required

Photo

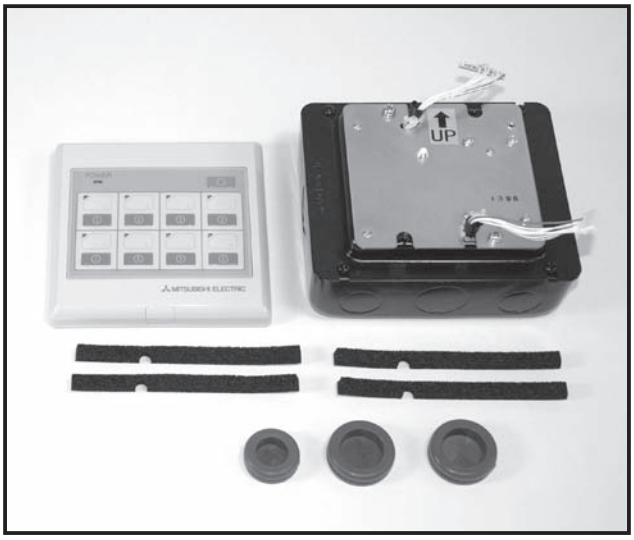

Descriptions

Enables regulate up to 8 indoor units from one single remote controller. ON/OFF selection and operation status confirmation is possible.

Applicable Models

- MSZ-FD25/35/50VA(S)
- MSZ-GE22/25/35/42/50VA
- MSZ-GA60/71VA
- MFZ-KA25/35/50VA
- MLZ-KA25/35/50VA
- SEZ-KA/KD
- SLZ-KA

Specifications

No. of controlled air conditioners	8 Units
Power	~/,N220-240 V 50/60 Hz
Power consumption	4 W
Current	0.02 A
Ambient Tempreture	0 - 40 °C
Dementions (H x W x D mm)	120 x 120 x 15
Weight	910 g

Dimensions

Unit : mm

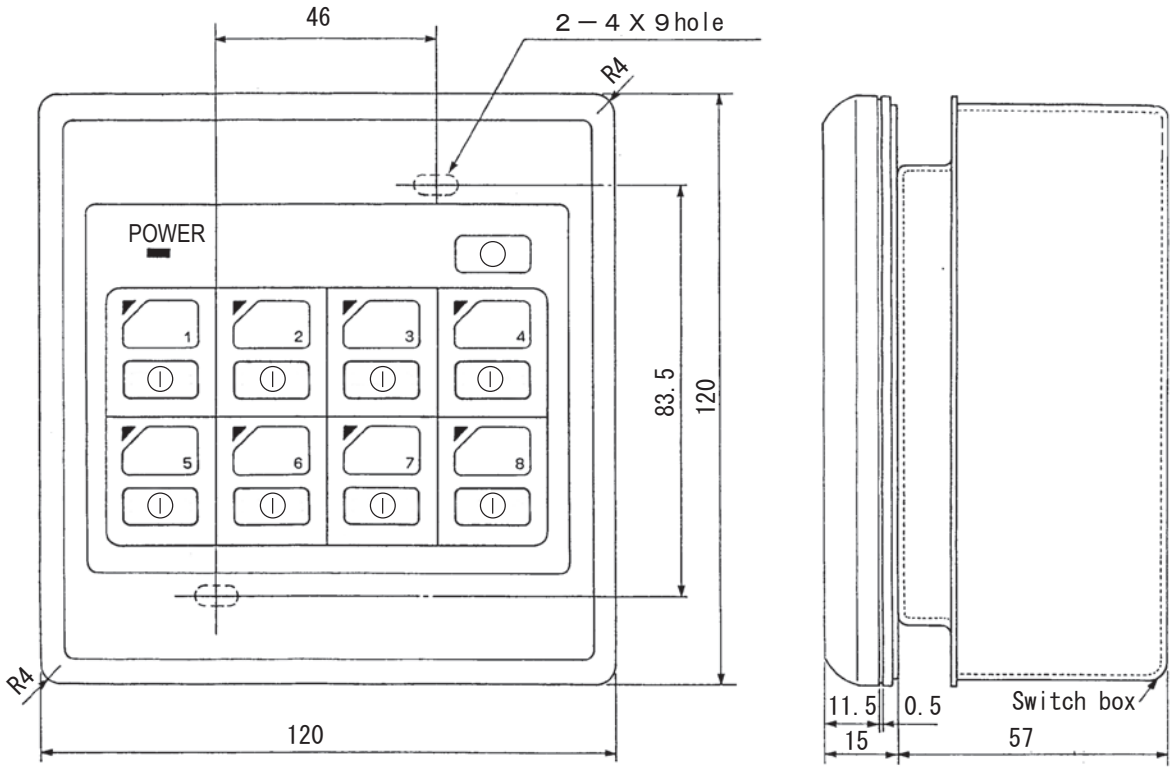

OPTIONAL PARTS

How to Use / How to Install

1. Accessory

Before installing the unit, make sure that you have all the necessary parts.

❶	Centralized controller A Cover Remove the cover with a flathead screwdriver. B Screw	1
❷	Base plate	1
❸	Switch box	1
❹	Room name stickers	1
❺	Rubber seal (large)	2
❻	Rubber seal (small)	1
❼	Sealing material (adhesive)	4
❽	Mounting screw M4 × 30	2

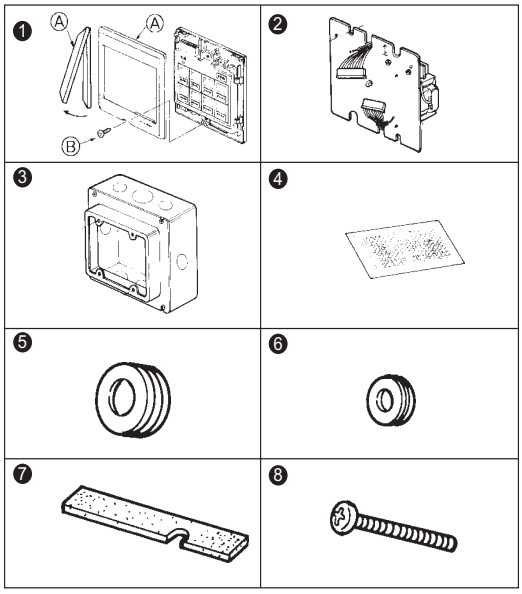

■ Items to Prepare at the Installation Site

Ⓐ	MA & Contact terminal interface (MAC-397IF-E)	One per air conditioner
Ⓑ	Power supply wire (2-core + ground) 1.5 mm², in conformity with Design 245 IEC 57.	1
Ⓒ	Connection wire Wire specification CVV (3-core) 0.5 mm² or equivalent * CVV is a control cable which is sheathed in poly-vinyl chloride with polyvinyl insulated wires inside.	One per air conditioner
Ⓓ	Ring tongue terminal for M4	1
Ⓔ	PG connection	1

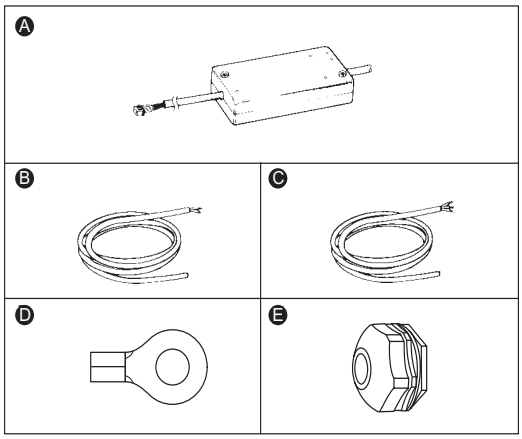

■ Mounting Wall

This centralized controller can be mounted on a wall with a thickness of 6-30 mm.
Since the maximum wall thickness for the centralized controller ❶ mounting screw M4 × 30 ❽ is 17 mm, use screws of the appropriate length for the wall thickness if the wall is between 17 mm and 30 mm thick.
(The best length for an M4 mounting screw is the wall thickness plus 13 mm.)

1-1. Connection Requirements

The MA & Contact terminal interface (MAC-397IF-E) is necessary to connect MAC-821SC-E with RAC.

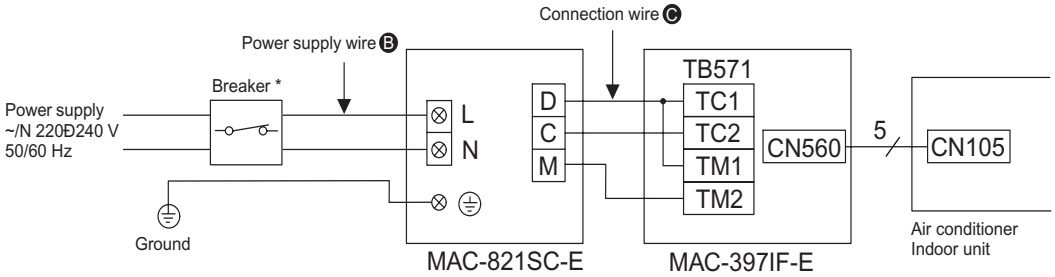

Breaker capacity	Connect to the supply terminals and leave a contact separation of at least 3 mm at each pole to disconnect the source power pole. (When the power switch is shut off, it must disconnect all poles.)
10 A	

1-2. Selecting an Installation Site

- The centralized controller ❶ is an exposed, wall-mounted model.
  Install the unit in a dry location.
- For information on selecting a mounting wall, see the "Mounting Wall" in section 2 .

■ **Switch Box**

The centralized controller power and connection wiring is generally direct wired.
The switch box ❸ supplied (with switch box covers for 2 units) should therefore be used for installing the centralized controller.

1-3. Electrical Work

- Use 1.5 mm^2 power supply wire (2-core + ground).
- For the connection wire Ⓒ, use a control cable CVV (0.5 mm^2 3-core) or equivalent product.
- CVV is a control cable which is sheathed in polyvinyl chloride with polyvinyl insulated wires inside.
- Complete the power supply wire and connection wire work before mounting the centralized controller.
- The electrical work should be performed in accordance with the Technical Standards Regarding Electrical Equipment and the Interior Wiring Standards.

1-4. Assigning Air Conditioner Device Numbers

- The numbers (1Ð8) displayed on the control panel of the centralized controller ❶ correspond to the numbers of each connected air conditioner (device number).
- Assign air conditioner device numbers that correspond to the numbers shown on the control panel based on the structure of the building or the layout of the rooms in which the air conditioners are installed.

1-5. Sample of Configuration

This figure shows a sample 4-unit configuration.

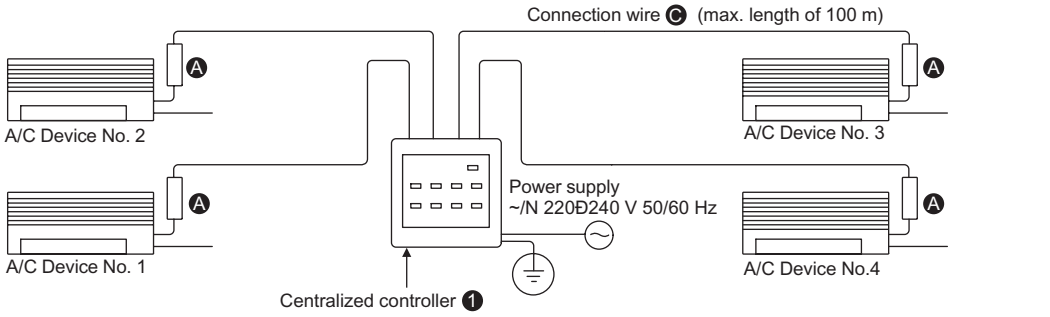

1-6. Mounting Diagram

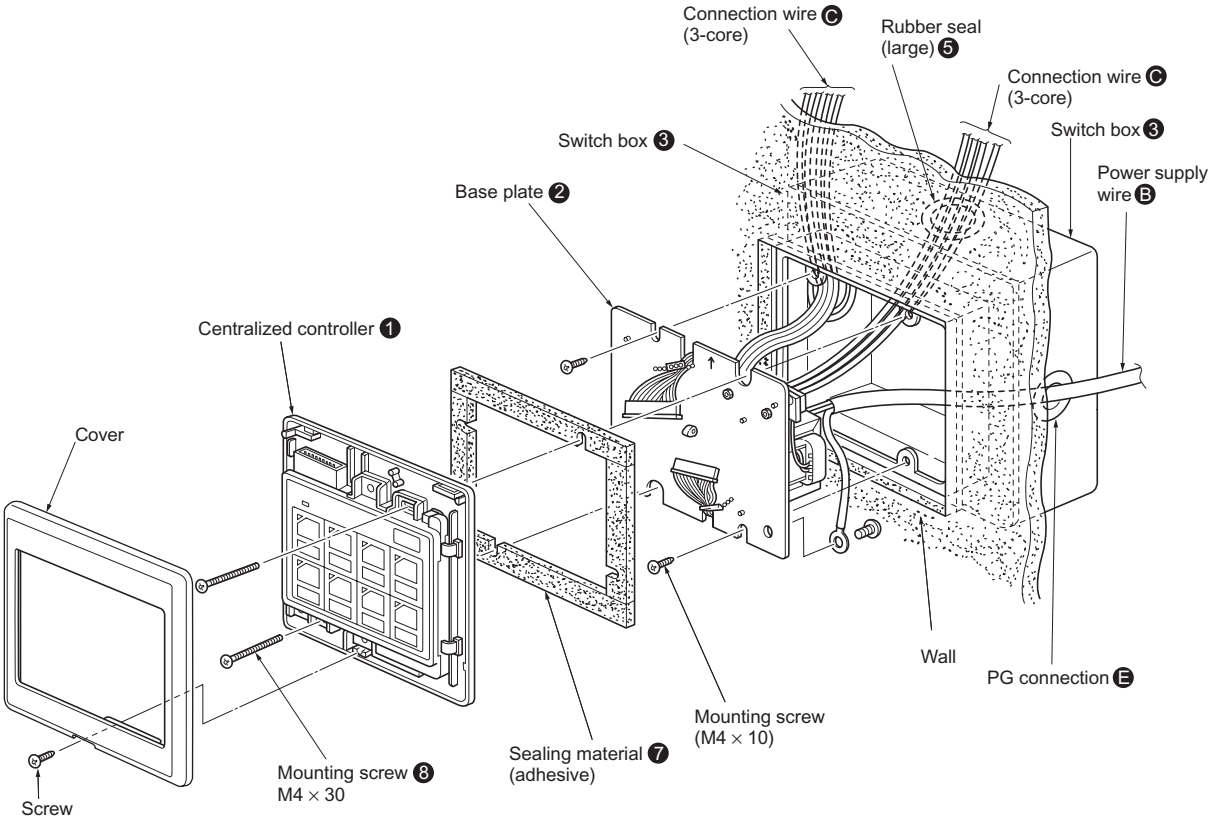

OPTIONAL PARTS

2. Mounting the Centralized Controller/Direct Wiring

2-1. Mounting Preparations

1 Remove 2 screws, and remove the base plate ❷ from the switch box ❸.
Set the 2 screws aside, as they will be used in the section on "4-1. Mounting the Base Plate" under "Mounting the Centralized Controller".

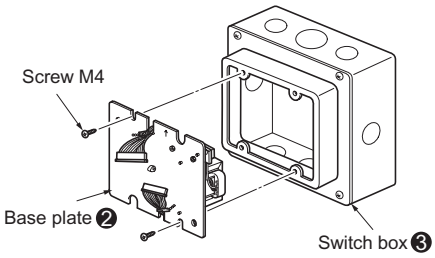

2 Insert the switch box ❸ into the wall. Size the hole in the wall to ensure that there is go gap between the switch box ❸ and the wall surface.
Use the switch box ❸ wall installation dimensions and opening dimensions shown in the figure below.

3 Feed the power supply wire Ⓑ, connection wire Ⓒ, and ground wire from inside of the wall, and pull them through the switch box ❸ into the room about 150 mm.
In addition, when not using a conduit for a connection wire Ⓒ, be sure to install a rubber seal (large) ❺ or rubber seal (small) ❻ into the hole in the switch box ❸ before feeding the connection wire Ⓒ through the hole.
Use the PG connection Ⓔ prepared at the installation site to secure the power supply wire Ⓑ in the hole in the switch box ❸.

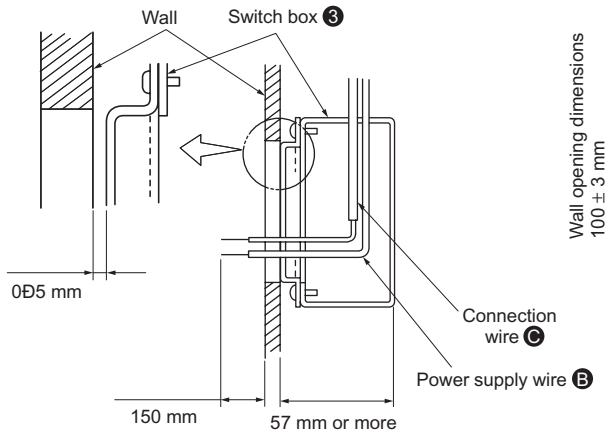

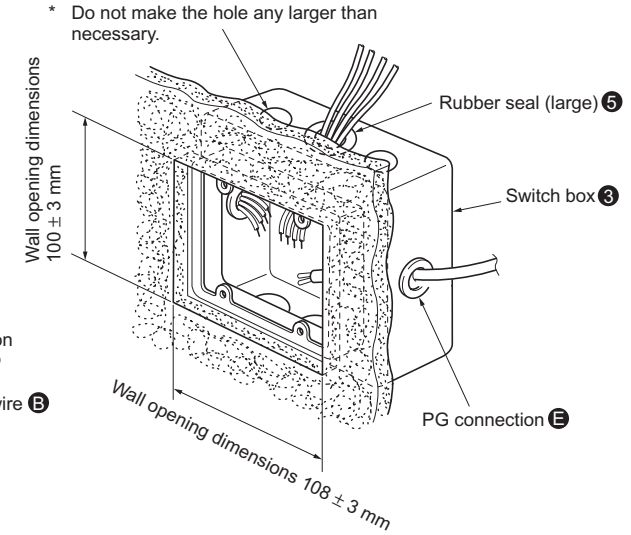

4 After the screws have been removed from the cover of the centralized controller ❶, remove the cover using a flathead screwdriver.

2-2. Connecting the Connection Wire

1 Connect the power supply wire (2-core + ground) Ⓑ to the power terminal.
After they are connected, check that the wires cannot be easily pulled off.

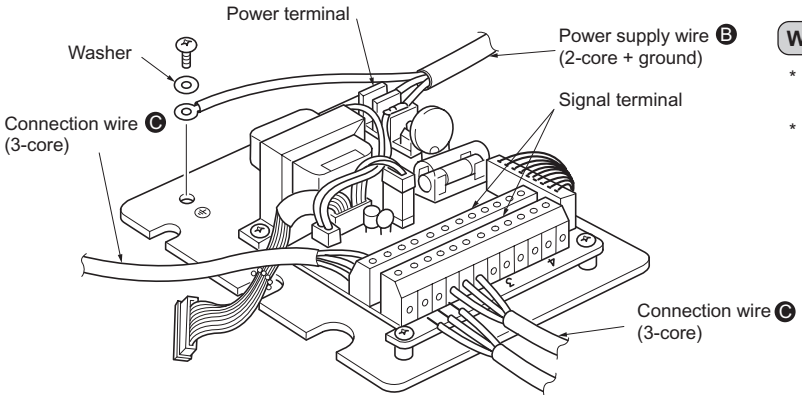

Work on Power Supply wire End

- Be sure to use 1.5 mm² power supply wire Ⓑ (2-core + ground).
- The work on power supply wire end should be performed as shown in the figure below.

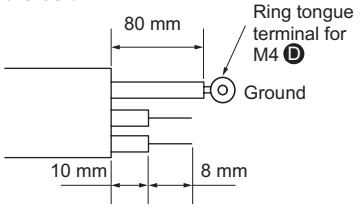

OPTIONAL PARTS

2 Mount the ground wire using the ground wire mounting screws.

3 Connect the connection wire (3-core) Ⓒ to the MA & Contact terminal interface (MAC-397IF-E) Ⓐ, (sold separately) corresponding to the air conditioner device number of each unit on the signal terminal.

* One signal terminal can be used for connecting 4 rooms.

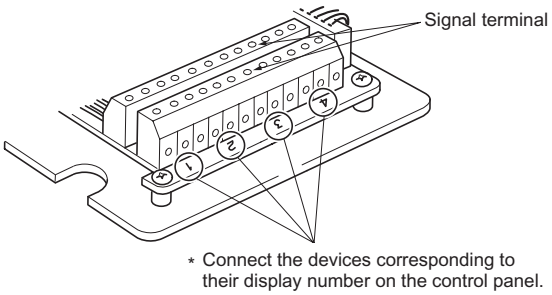

Work on Connection Wire End

Note: Centralized controller side

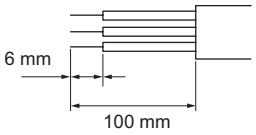

* Connect the centralized controller to the adapters as shown below .

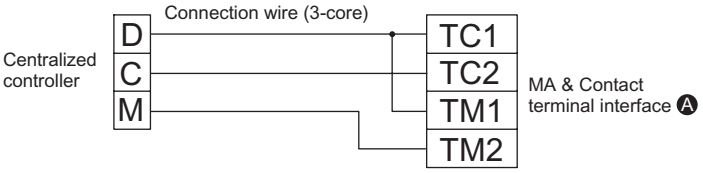

3. Mounting the Centralized Controller

3-1. Mounting the Base Plate

Insert the base plate ❷ into the switch box ❸, and remount it using the screws removed in the "3-1 Mounting Preparations".
Be sure to mount the base plate ❷ so the up arrow is facing upward.
Also, be careful not to damage the wires by getting them caught between plate and the switch box ❸.

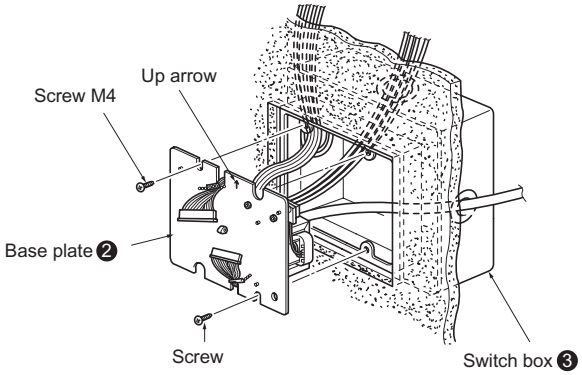

3-2. Mounting the Centralized controller

1 Before mounting the unit, apply the supplied sealing materials ❼ to the base plate ❷, and fill in the space between the switch box ❸ and the hole in the wall (a gap here could result in dew condensation).
Cut the sealing material ❼ to a length such that it can be wrapped around the hole in the wall based on the fixed position.

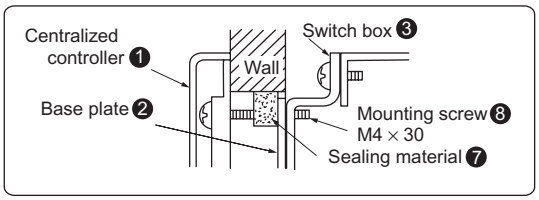

2 Connect the connection cord from the base plate ❷ through the slot in the centralized controller.

3 Mount the centralized controller to the base plate ❷ using the supplied mounting screw ❽.
Be careful not to damage the connection wires by getting them caught in the walling materials.

4 Using the supplied screw, attach the cover to the centralized controller.

5 To attach the cover to the centralized controller, fit the tabs along the top of the cover into the holes in the centralized controller and then push the lower portion of the cover into place.

⚠ **Caution**

Be sure not to tighten the mounting screw ❽ too tight.
Doing so may disfigure the centralized controller and prevent the cover from closing securely.

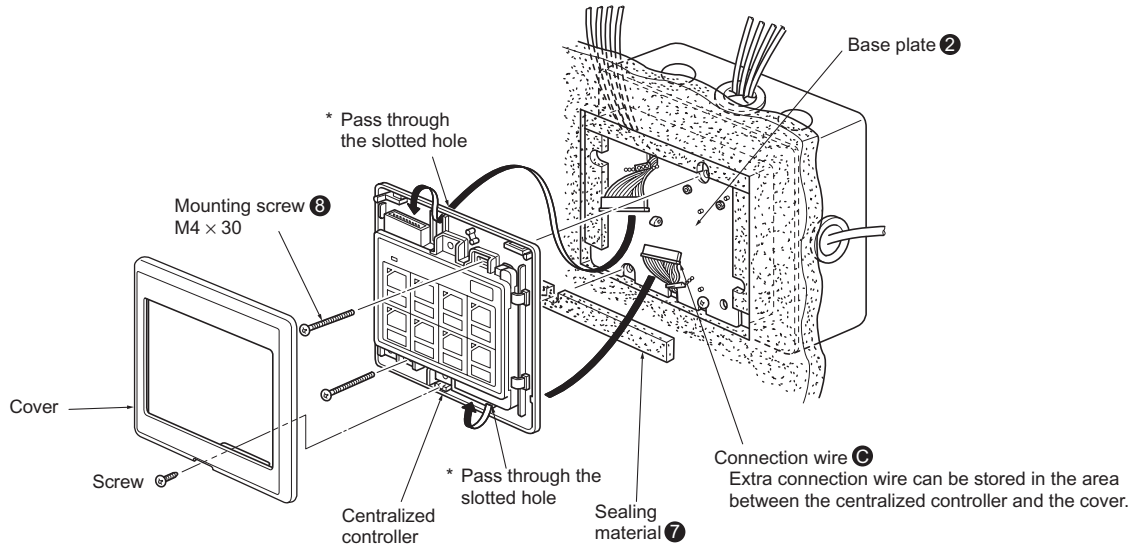

4. Test Run

A test run should be performed after the centralized controller and the MA & Contact terminal interface (MAC-397IF-E) have all been installed.

1 Turn the power switch on each air conditioner to ON.

2 Press the ON/OFF button on the wireless remote controller for each air conditioner to make sure the air conditioner turns on, and then press the button again to turn each unit off.

3 Supply power (AC 220-240 V) to the centralized controller .

4 Press the ON/OFF button on the upper part of the control panel of the centralized controller, and confirm that the (green) operation indicator lamp for that device number comes on.
Also confirm that the corresponding air conditioner has turned on (the operation indicator lamp will not come on if the air conditioner is not connected).

5 Press the ON/OFF button again, and confirm that the operation indicator lamp goes out and that the air conditioner unit turns off.

6 Repeat steps *4* and *5* again for each device number.

7 Press the All OFF button, and confirm that all the (green) operation indicator lamps go out and that all the air conditioners turn off.

5. Room Name Display

Select the appropriate stickers from the room name stickers ❹ supplied, and affix them to the display section of the panel.

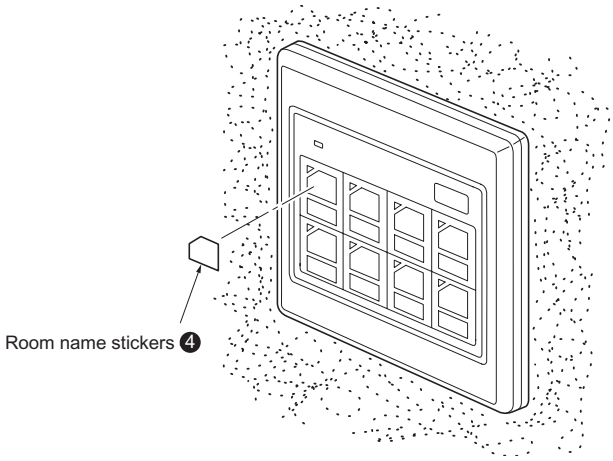

Power Supply Terminal Kit for new A-Control indoor units (L/N/Earth) PAC-SG94HR-E

Photo

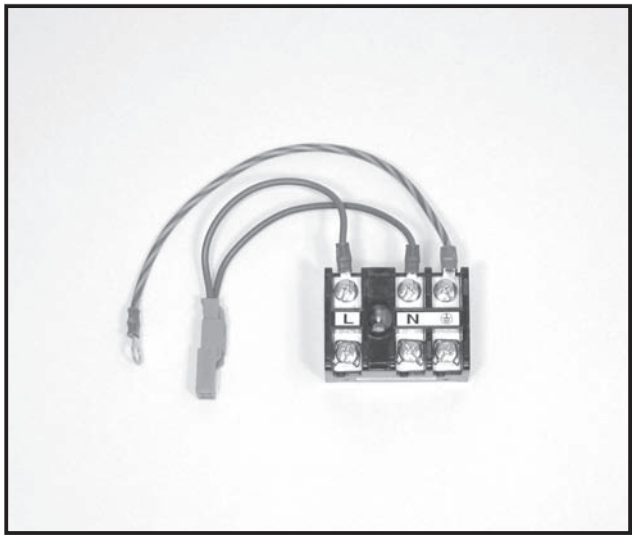

Descriptions

This kit (L/N/Earth) is used when the power supply of the indoor unit and the outdoor unit is separated.
(For PUHZ applications only)

Applicable Models

- PKA-RP35/50HAL
- PKA-RP50/60/71/100KAL

Specifications

Terminal block capacity	20A/250V
Terminal block material	Denatured melamine

Dimensions

Unit : mm

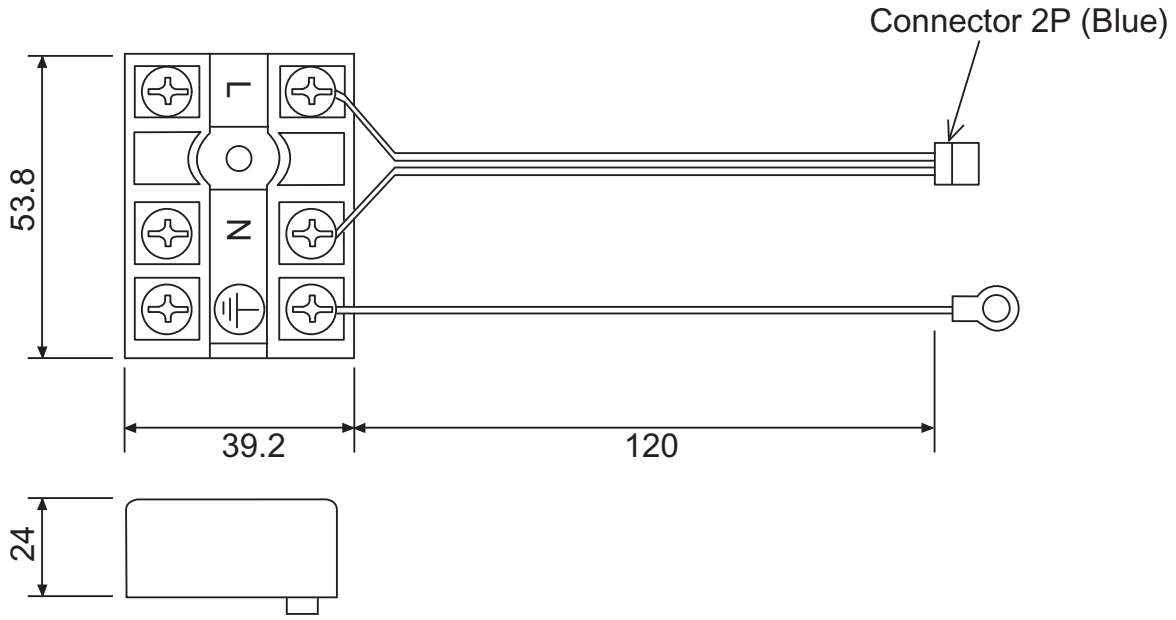

OPTIONAL PARTS

How to Use / How to Install

1. Overview

This kit is used when the power supply of the indoor unit and the outdoor unit is separated.
(for PUHZ applications only)
Refer to the installation manual of the indoor unit as well.

2. Provided parts

Comfirm the following parts are included.

Terminal block (lead wires already wired) x 1	Screw (to attach terminal block) x 1	Fastener (to tie lead wires) x 1	Screw (to secure ground wire) x 1
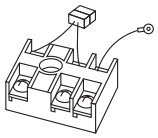			For PAC-SG96HR-E only 

1:1 System

<For models without heater>
•The indoor power supply terminal kit is required.

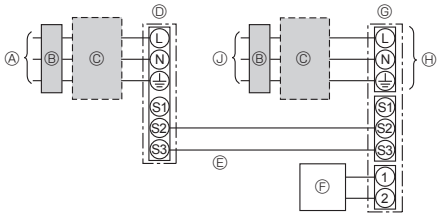

ⒶOutdoor unit power supply
ⒷEarth leakage breaker
ⒸWiring circuit breaker or isolating switch
ⒹOutdoor unit
ⒺIndoor unit / outdoor unit connecting cords
ⒻWired remote controller(option)
ⒼIndoor unit
ⒽOption
ⒿIndoor unit power supply

•Affix a label B that is included with the manuals near each wiring diagram for the indoor and outdoor units.

Simultaneous twin/triple/four system

<For models without heater>
•The indoor power supply terminal kits are required.

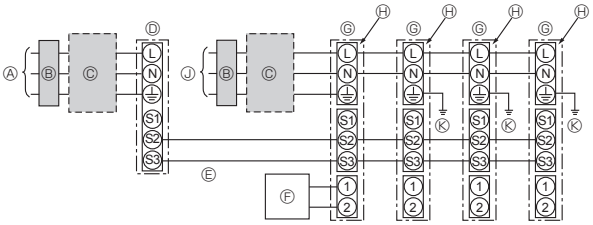

ⒶOutdoor unit power supply
ⒷEarth leakage breaker
ⒸWiring circuit breaker or isolating switch
ⒹOutdoor unit
ⒺIndoor unit / outdoor unit connecting cords
ⒻWired remote controller(option)
ⒼIndoor unit
ⒽOption
ⒿIndoor unit power supply
⒦Indoor unit earth

•Affix a label B that is included with the manuals near each wiring diagram for the indoor and outdoor units.

OPTIONAL PARTS

3. Attachment method

■ Wall mounted, PKA-RP.HAL type:

1. Remove the electrical box covers (front and side).

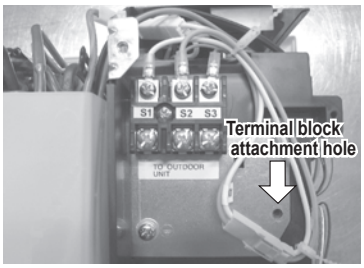

2. Attach terminal block ① using screw ② in the direction shown in the figure.

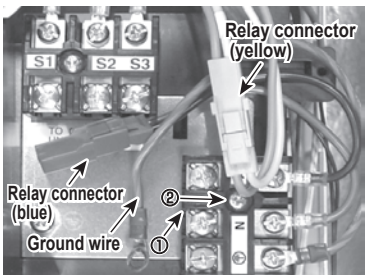

3. Change the relay connectors of blue and yellow lead wires, secure the ground wire using screw ④ at the position shown in the figure, and then bundle the lead wires using fastener ③.

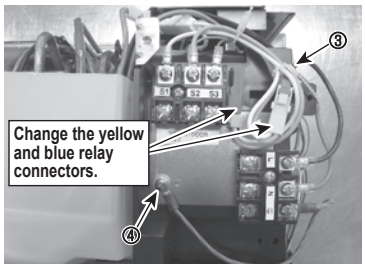

■ Wall mounted, PKA-RP.KAL type:

1. Remove the electrical box covers (front and side).

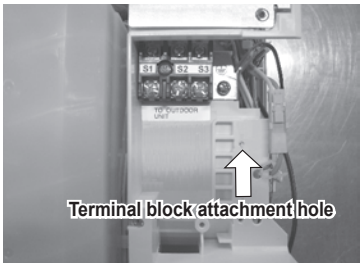

2. Attach terminal block ① using screw ② in the direction shown in the figure.

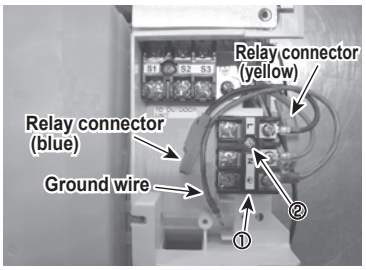

3. Change the relay connectors of blue and yellow lead wires, secure the ground wire using screw ④ at the position shown in the figure, and then bundle the lead wires using fastener ④.

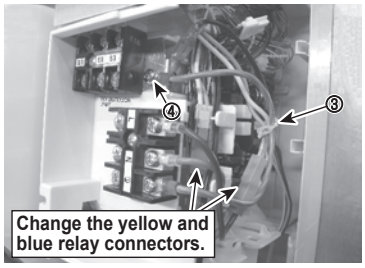

4. Electric wiring

Be sure to do the electric wiring following the steps in each indoor unit installation manual.

5. Paste the labels enveloped in the instruction document of indoor unit near the electric wiring diagrams of both indoor and outdoor units.

Three types of labels (labels A-C) are provided: Paste the label B.
(Separate indoor unit/outdoor unit power supplies... Label B)

6. DIP switch settings of the outdoor unit control board

It is necessary to change the settings of DIP switch on the outdoor unit control board.

Outdoor unit DIP switch settings (when using separate indoor unit / outdoor unit power supplies only)	ON [ ] [ ] [3] OFF [1] [2] [ ] <SW8>

7. Test run

Perform a test run following the steps in the installation manual of the outdoor unit.

Change of connectors

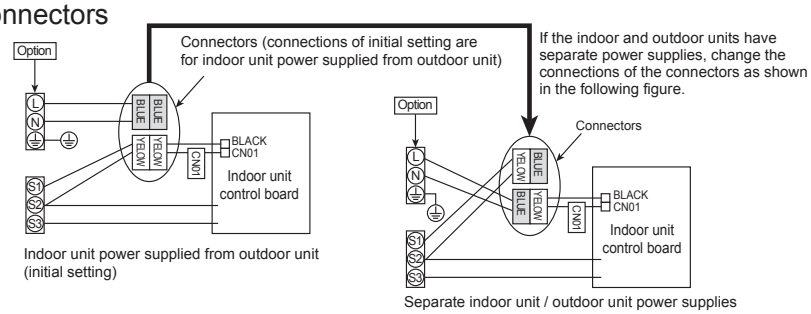

OPTIONAL PARTS

Power Supply Terminal Kit for new A-Control indoor units (L/N/Earth) PAC-SG96HR-E

Photo

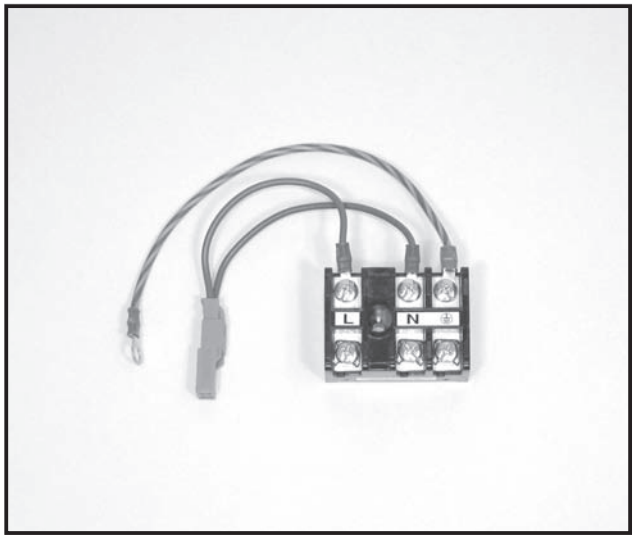

Descriptions

This kit (L/N/Earth) is used when the power supply of the indoor unit and the outdoor unit is separated.
(For PUHZ applications only)

Applicable Models

- PSA-RP GA
- PCA-RP KA

Specifications

Terminal block capacity	30A/330V
Terminal block material	Denatured melamine
Parts composition	Terminal block (with lead wires connected) x 1, Screw x 1, Fastener (for binding lead wires)

Dimensions

Unit : mm

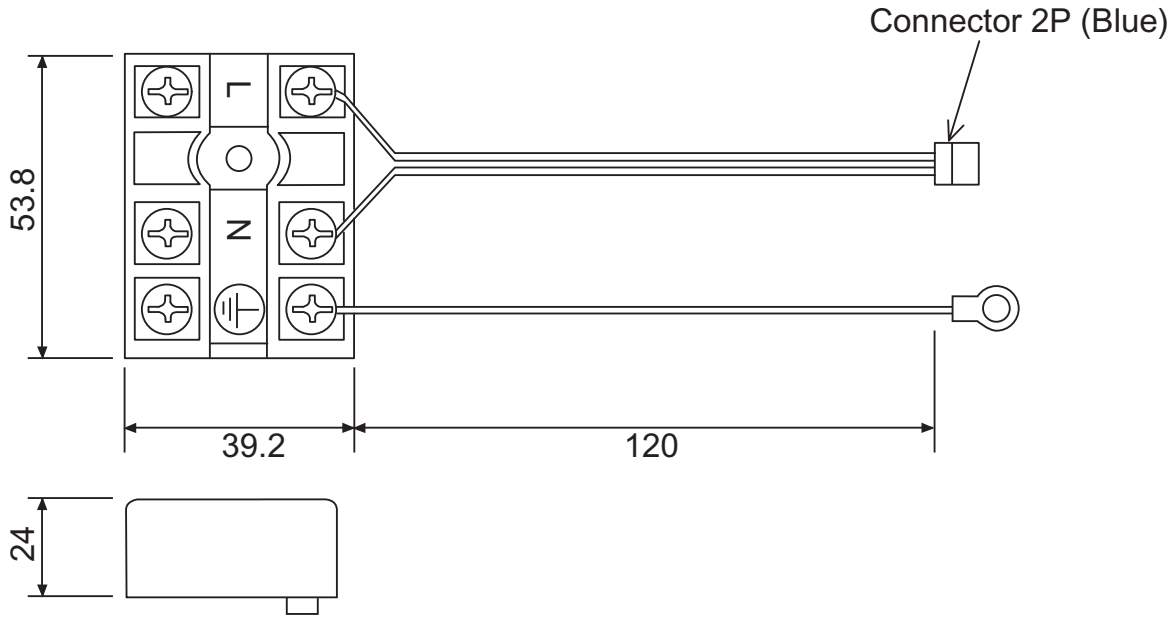

OPTIONAL PARTS

Power Supply Terminal Kit for new A-Control indoor units (L/N) PAC-SG97HR-E

Photo

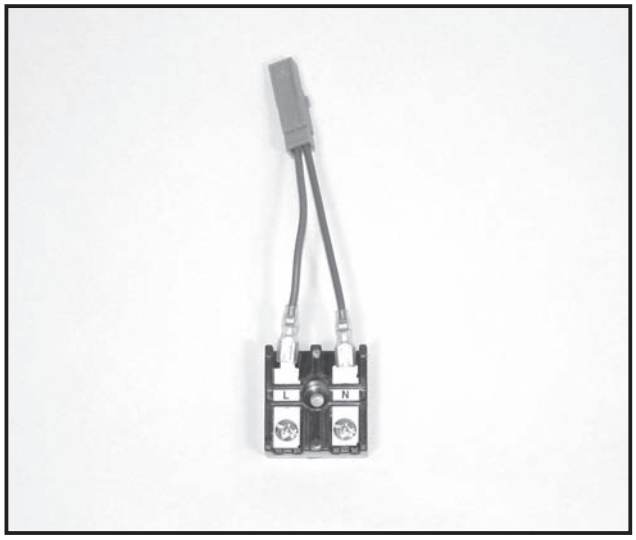

Descriptions

This kit (L/N) is used when the power supply of the indoor unit and the outdoor unit is separated.
(For PUHZ applications only)

Applicable Models

- PCA-RP HA
- PEAD-RP JA(L)

Specifications

Terminal block capacity	15A/264V
Terminal block material	Denatured melamine
Parts composition	Terminal block (with lead wires connected) x 1, Screw x 1, Fastener (for binding lead wires)

Dimensions

Unit : mm

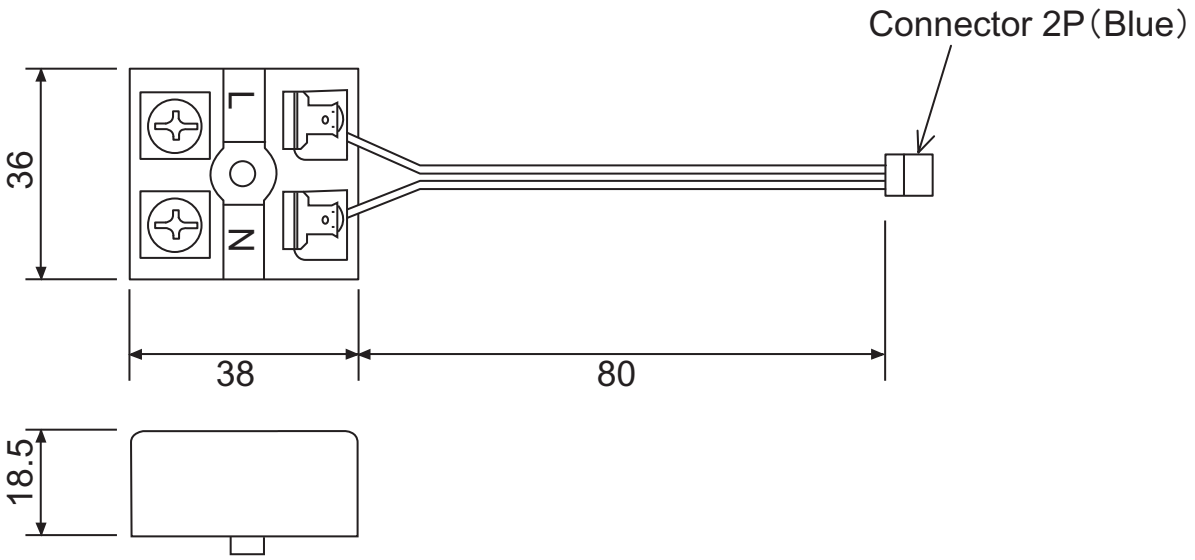

OPTIONAL PARTS

How to Use / How to Install

1. Overview

This kit is used when the power supply of the indoor unit and the outdoor unit is separated.
(for PUHZ applications only)
Refer to the installation manual of the indoor unit as well.

2. Provided parts

Comfirm the following parts are included.

Terminal block (lead wires already wired) x 1	Screw (to attach terminal block) x 1	Fastener (to tie lead wires) x 1	Screw (to secure ground wire) x 1
For PAC-SG96HR-E For PAC-SG97HR-E 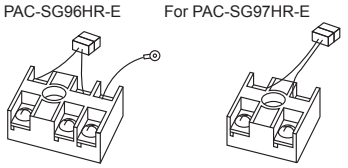			For PAC-SG96HR-E only 

1:1 System

<For models without heater>
•The indoor power supply terminal kit is required.

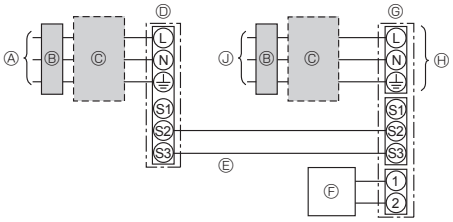

ⒶOutdoor unit power supply
ⒷEarth leakage breaker
ⒸWiring circuit breaker or isolating switch
ⒹOutdoor unit
ⒺIndoor unit / outdoor unit connecting cords
ⒻRemote controller
ⒼIndoor unit
ⒽOption
ⒿIndoor unit power supply

•Affix a label B that is included with the manuals near each wiring diagram for the indoor and outdoor units.

Simultaneous twin/triple/four system

<For models without heater>
•The indoor power supply terminal kits are required.

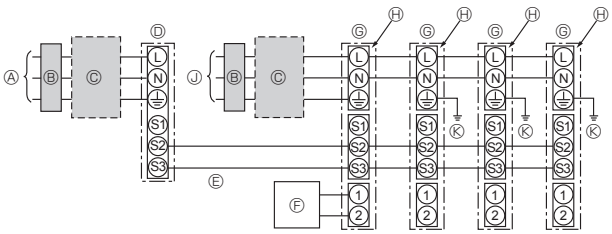

ⒶOutdoor unit power supply
ⒷEarth leakage breaker
ⒸWiring circuit breaker or isolating switch
ⒹOutdoor unit
ⒺIndoor unit / outdoor unit connecting cords
ⒻRemote controller
ⒼIndoor unit
ⒽOption
ⒿIndoor unit power supply
⒦Indoor unit earth

•Affix a label B that is included with the manuals near each wiring diagram for the indoor and outdoor units.

3. Attachment method

■PAC-SG96HR

Ceiling suspended, PCA-RP.KA type:

1.Remove the cover of electric parts box.

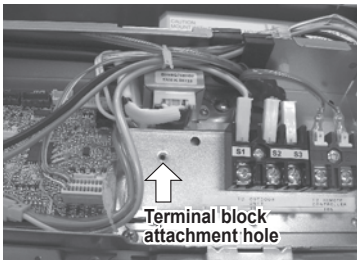

2. Attach terminal block ① using screw ② in the direction shown in the figure.

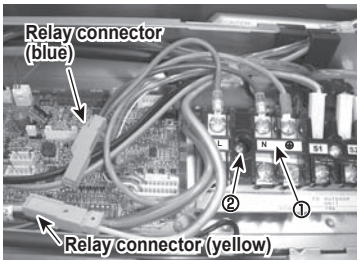

3. Change the relay connectors of blue and yellow lead wires, secure the ground wire using screw ④ at the position shown in the figure, and then bundle the lead wires using fastener ③.

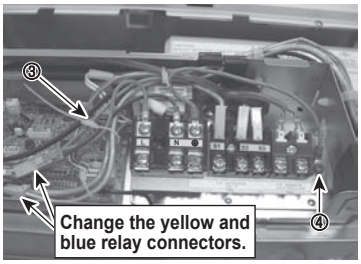

Ceiling suspended, PCA-RP.GA type:

1.Remove the cover of electric parts box.

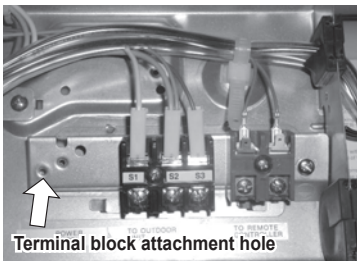

2. Attach terminal block ① using screw ② in the direction shown in the figure.

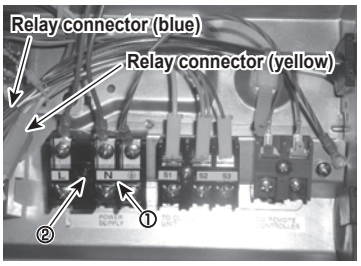

3. Change the relay connectors of blue and yellow lead wires, secure the ground wire using screw ④ at the position shown in the figure, and then bundle the lead wires using fastener ③.

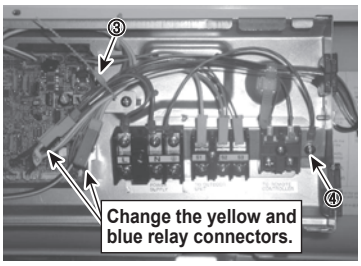

OPTIONAL PARTS

Wall mounted, PKA-RP.GAL type:

1.Remove the terminal block cover of electric parts box.

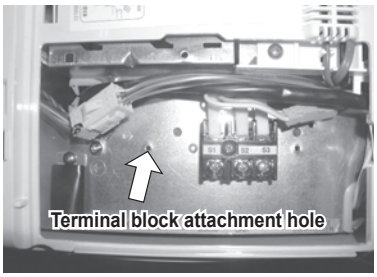

2. Attach terminal block ① using screw ② in the direction shown in the figure.

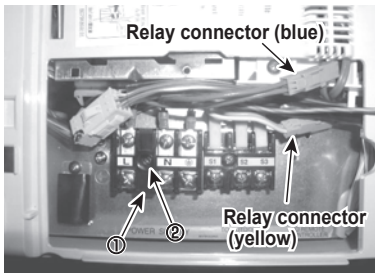

3. Change the relay connectors of blue and yellow lead wires, secure the ground wire using screw ④ at the position shown in the figure, and then bundle the lead wires using fastener ③.

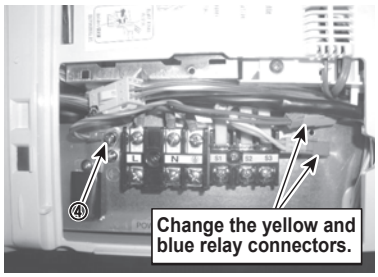

Wall mounted, PKA-RP.FAL type:

1.Remove the terminal block cover of electric parts box.

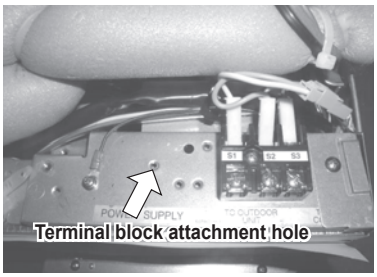

2. Attach terminal block ① using screw ② in the direction shown in the figure.

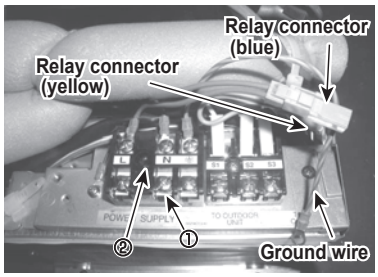

3. Change the relay connectors of blue and yellow lead wires, secure the ground wire using screw ④ at the position shown in the figure, and then bundle the lead wires using fastener ④.

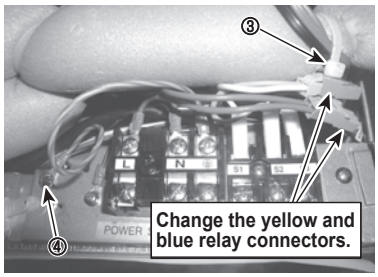

Ceiling concealed, PEAD-RP.EA type:

1.Remove the cover of electric parts box.

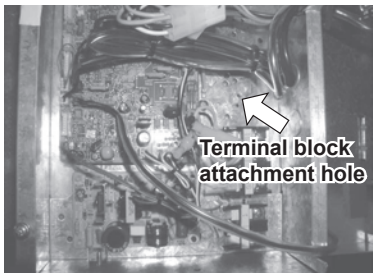

2. Attach terminal block ① using screw ② in the direction shown in the figure.

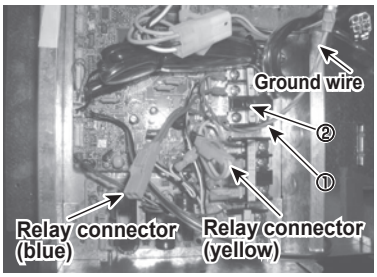

3. Change the relay connectors of blue and yellow lead wires, secure the ground wire using screw ④ at the position shown in the figure, and then bundle the lead wires using fastener ③.

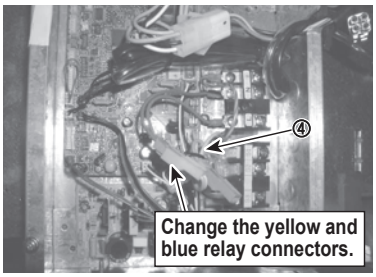

Ceiling concealed, PEA-RP.EA type:

1.Remove the cover of electric parts box.

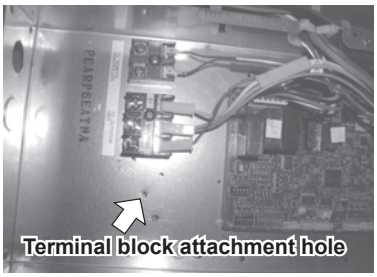

2. Attach terminal block ① using screw ② in the direction shown in the figure.

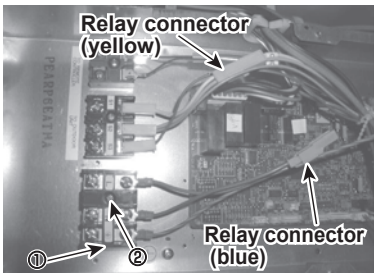

3. Change the relay connectors of blue and yellow lead wires, secure the ground wire using screw ④ at the position shown in the figure, and then bundle the lead wires using fastener ③.

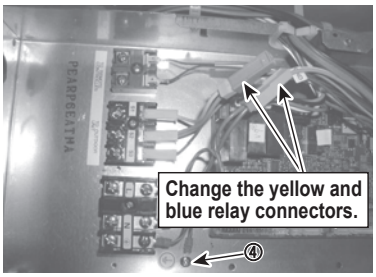

OPTIONAL PARTS

■PAC-SG97HR

Ceiling suspended for kitchens, PCA-RP.HA type:

1.Remove the terminal block cover of electric parts box.

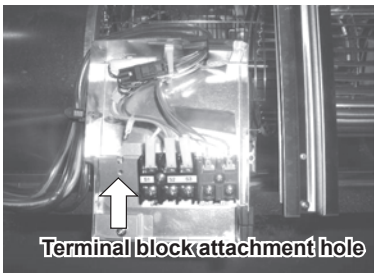

2. Attach terminal block ① using screw ② in the direction shown in the figure.

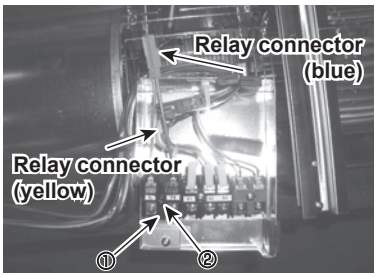

3. Change the relay connectors of blue and yellow lead wires, and then bundle the lead wires using fastener ③.

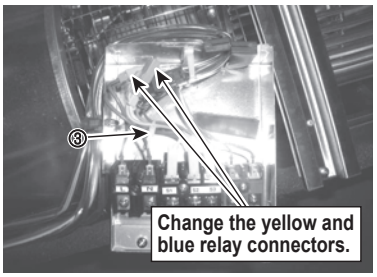

Ceiling concealed, PEAD-RP.JA(L) type

1.Remove the cover of electric parts box.

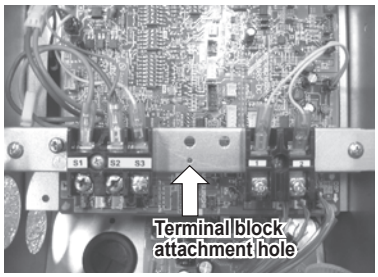

2. Attach terminal block ① using screw ② in the direction shown in the figure.

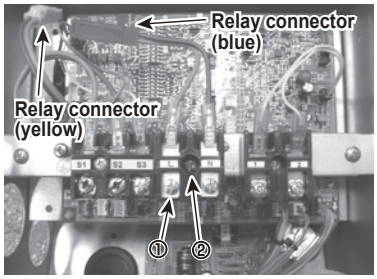

3.Change the relay connectors of blue and yellow lead wires.

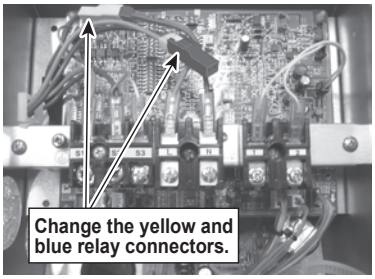

Ceiling concealed, PEAD-RP.GA type:

1.Remove the terminal block cover of electric parts box.

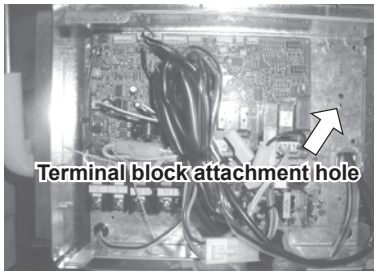

2. Attach terminal block ① using screw ② in the direction shown in the figure.

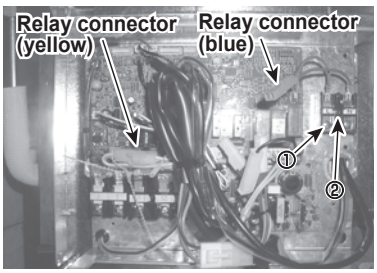

3.Change the relay connectors of blue and yellow lead wires.

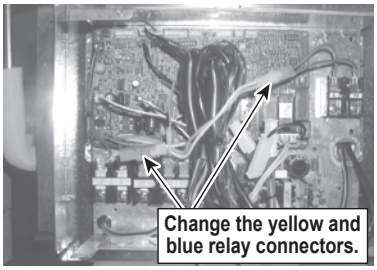

OPTIONAL PARTS

4. Electric wiring

Be sure to do the electric wiring following the steps in each indoor unit installation manual.

5. Paste the labels enveloped in the instruction document of indoor unit near the electric wiring diagrams of both indoor and outdoor units.

Three types of labels (labels A-C) are provided: Paste the label B.
(Separate indoor unit/outdoor unit power supplies... Label B)

6. DIP switch settings of the outdoor unit control board

It is necessary to change the settings of DIP switch on the outdoor unit control board.

Outdoor unit DIP switch settings (when using separate indoor unit / outdoor unit power supplies only)	ON / OFF: 1 2 3 <SW8>

7. Test run

Perform a test run following the steps in the installation manual of the outdoor unit.

Change of connectors (except PCA-RP·KA type)

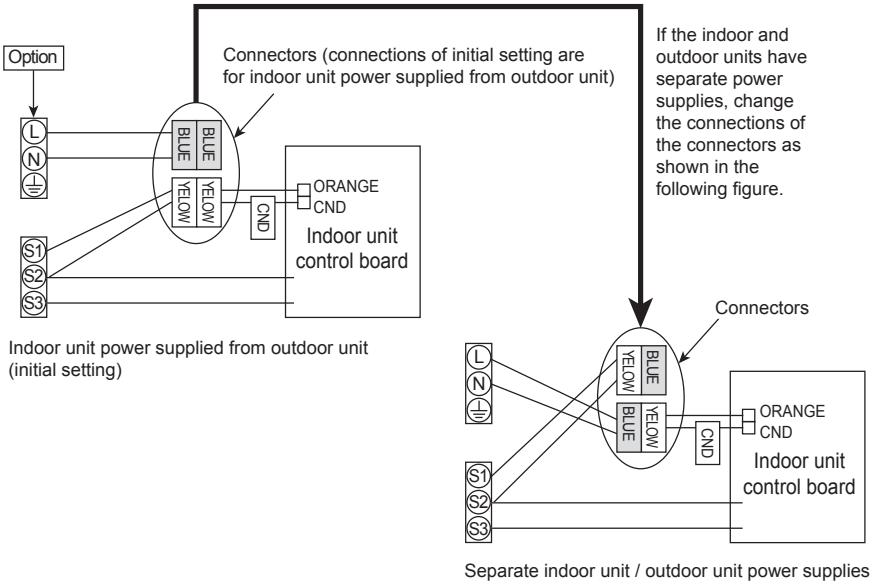

(PCA-RP·KA type)

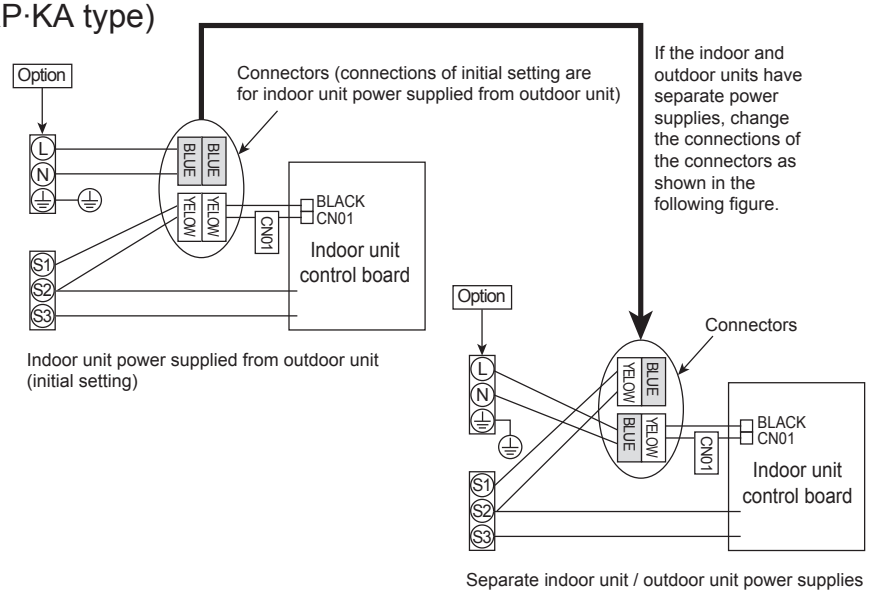

OPTIONAL PARTS

Indoor power supply terminal kit PAC-SH52HR-E

Photo

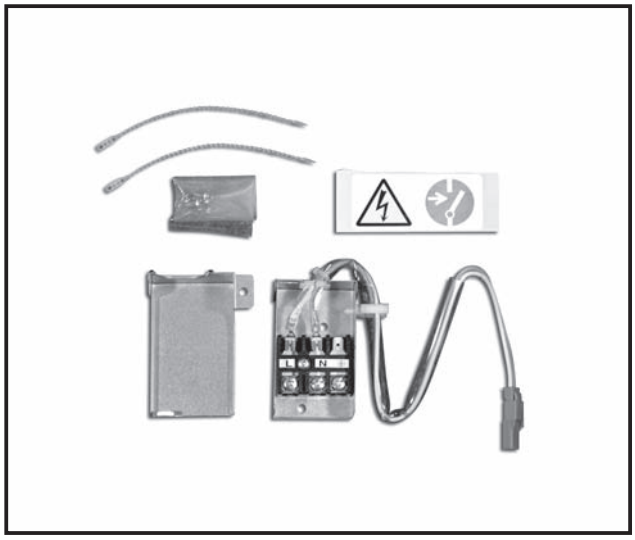

Descriptions

This kit is used when the power supply of the indoor unit and the outdoor unit is separated.
(for PLA-RP•BA series applications only)

Applicable Models

■ PLA-RP•BA/BA2/BA3

Specifications

Terminal block capacity	5A/250V
Terminal block material	Denatured melamine

Dimensions

Unit : mm

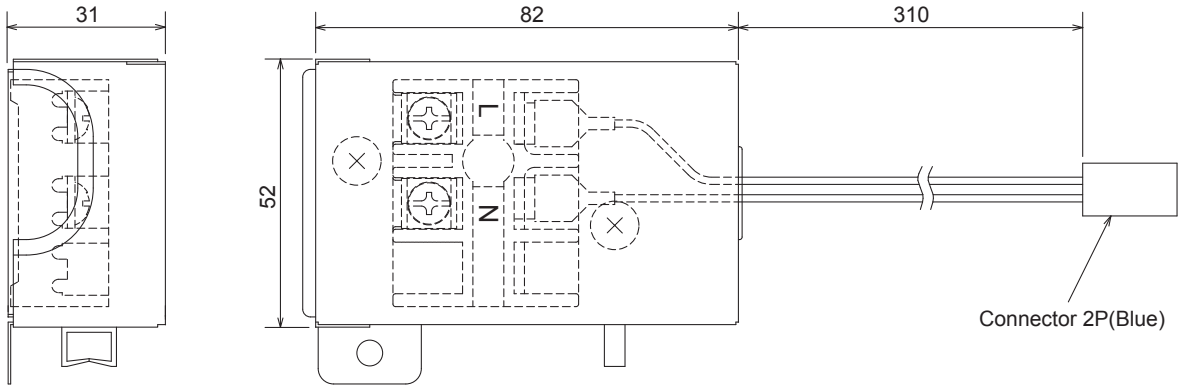

OPTIONAL PARTS

How to Use / How to Install

1. Overview

This kit is used when the power supply of the indoor unit and the outdoor unit is separated. (for PLA-RP.BA applications only)
Refer to the installation manual of the indoor unit as well.

2. Provided parts

Comfirm the following parts are included.

① Terminal block (lead wires already wired) x 1	② Cover x 1	③ Screw x 3	④ Fastener (to tie lead wires) x 2
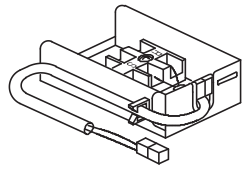	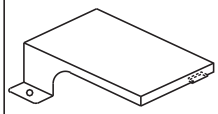		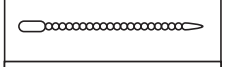
			⑤Seal x 1
			

3. Attachment method

1. Remove the cover of electric parts box.

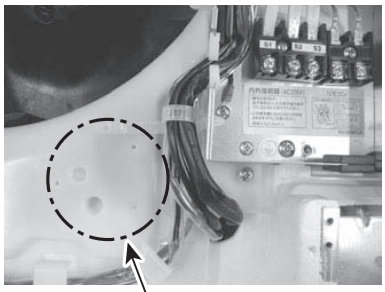

Terminal block attachment position

2. Use the two screws ③ to attach the terminal block ① in the direction shown in the figure, and wire the leads to electric parts box.

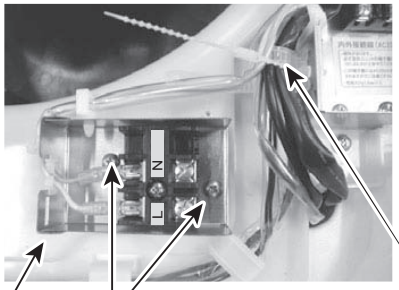

Terminal block①

Screws③(2pcs)

Bundle the leads with other leads using fastener ④: Cut off any surplus.

3. Exchange the blue and yellow relay connectors of leads, and use fastener ④ to bundle the leads.

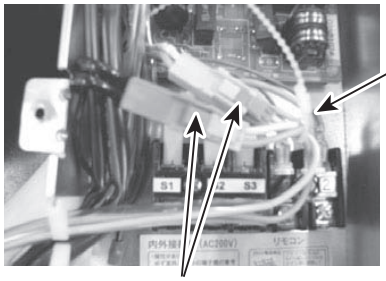

Fastener④（1Piece）

Exchange the blue and yellow relay connectors.

4. Hook cover ② onto terminal block ① to attach the cover, and use screw ③（1Piece）to secure it to the indoor unit.

Portion to be hooked

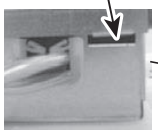

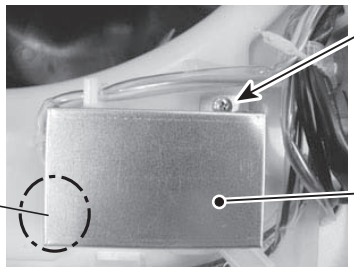

Screw③（1Piece）

Cover②

OPTIONAL PARTS

Change of connectors

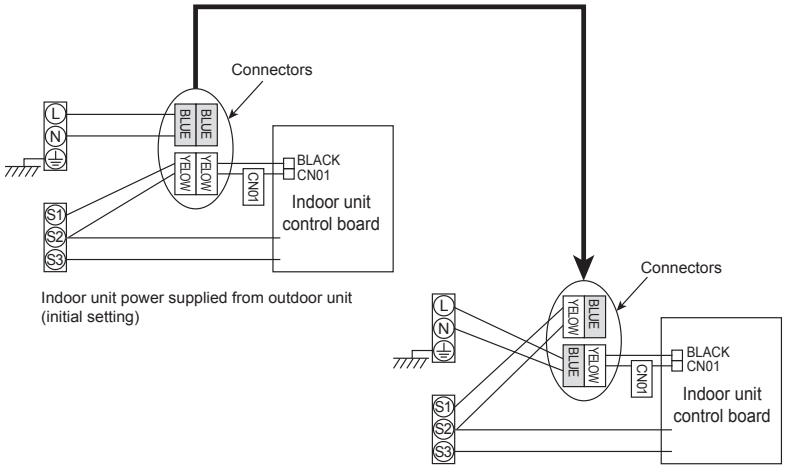

1:1 System

<For models without heater>
•The indoor power supply terminal kit is required.

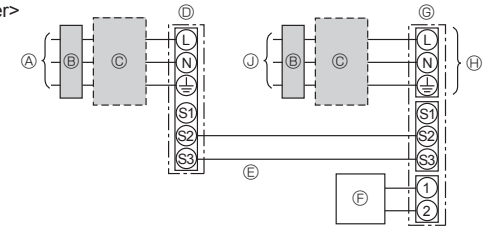

ⒶOutdoor unit power supply
ⒷEarth leakage breaker
ⒸWiring circuit breaker or isolating switch
ⒹOutdoor unit
ⒺIndoor unit / outdoor unit connecting cords
ⒻRemote controller
ⒼIndoor unit
ⒽOption
ⒿIndoor unit power supply

•Affix a label B that is included with the manuals near each wiring diagram for the indoor and outdoor units.

Simultaneous twin/triple/four system

<For models without heater>
•The indoor power supply terminal kits are required.

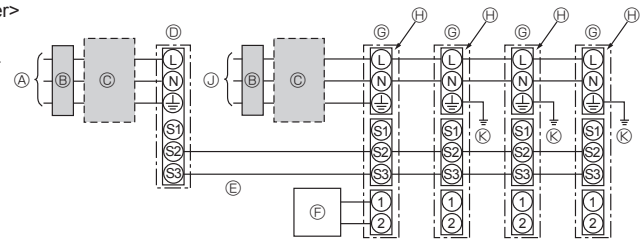

ⒶOutdoor unit power supply
ⒷEarth leakage breaker
ⒸWiring circuit breaker or isolating switch
ⒹOutdoor unit
ⒺIndoor unit / outdoor unit connecting cords
ⒻRemote controller
ⒼIndoor unit
ⒽOption
ⒿIndoor unit power supply
⒦Indoor unit earth

•Affix a label B that is included with the manuals near each wiring diagram for the indoor and outdoor units.

4. Electric wiring

Be sure to do the electric wiring following the steps in each indoor unit installation manual.

5. Paste the labels enveloped in the instruction document of indoor unit near the electric wiring diagrams of both indoor and outdoor units.

Three types of labels (labels A-C) are provided: Paste the label B.
(Separate indoor unit/outdoor unit power supplies... Label B)

6. Paste the seal ⑤ on the surface of indoor electric cover.

7. DIP switch settings of the outdoor unit control board

It is necessary to change the settings of DIP switch on the outdoor unit control board.

Wired Remote Controller with Weekly Timer Function PAR-21MAA*-J

*MAC-397IF-E required

Photo

Descriptions

Advanced MA remote controller with the large size dot liquid crystal display. Multi-language display and weekly timer function are available.

Applicable Models

- MSZ-FD25/35/50VA(S)
- MFZ-KA25/35/50VA
- MSZ-GE22/25/35/42/50VA
- MLZ-KA25/35/50VA
- MSZ-GA60/71VA

Specifications

External colors	Cover	Pure white (Munsell 6.9Y 8.9/0.4)
	LCD peripheral area	Medium gray

Dimensions

Unit : mm

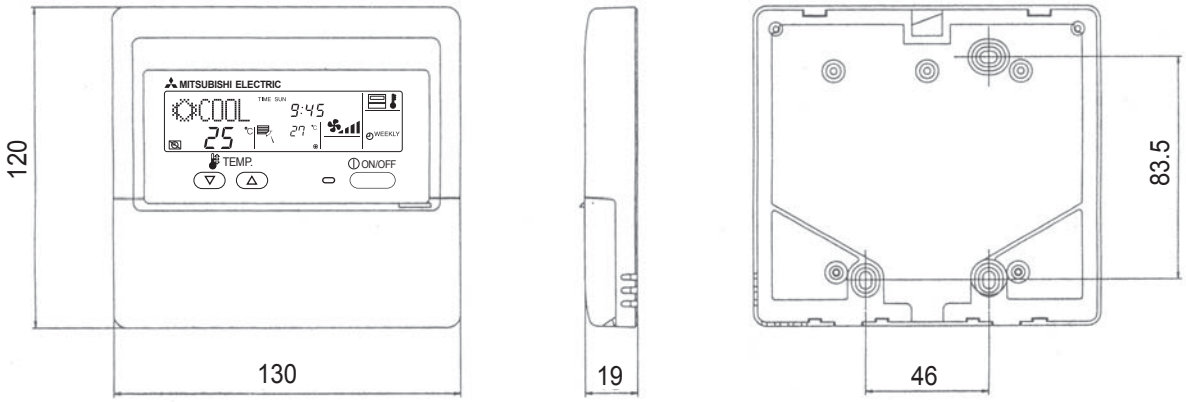

OPTIONAL PARTS

How to Use / How to Install

1 Confirming the Supplied Parts

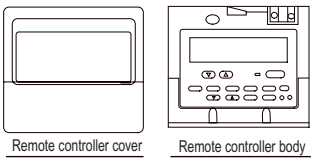

Confirm that the box includes the following parts, in addition to this installation manual:

1. Remote controller (cover, body) 1
2. Cross recessed pan head screw (M4 ×30) 2
3. Wood screw (4.1 ×16, used for directly hooking to the wall) 2
4. Caution label (in 12 languages) 1

*1 For the remote control, obtain a 2-core cable between 0.3 and 1.25 mm^2 at the site.
*2 PAC-YT32PTA cannot be connected.

2 How To Install

1. Choose a place in which to install the remote controller (switch box).

Be sure to observe the following steps:

(1) Temperature sensors are provided with both the remote controller and the indoor units. When using the remote controller temperature sensor, the master remote controller detects the room temperature. Install the master remote controller in a place where the average room temperature can be detected and which is not affected by any heat source from direct sunlight or air blown from air conditioning units.

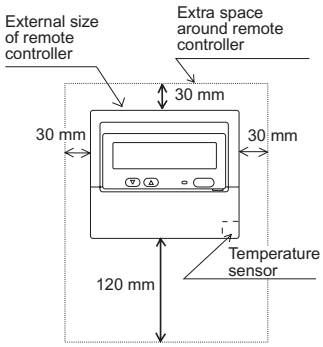

> ⚠ CAUTION The place where (when) the difference between the room temperature and the wall temperature is large, the wall temperature that is affected by the temperature of the wall on which the remote controller is installed is measured. Therefore, the difference between the room temperature and the measured wall temperature may be large.
> When the installation site is one of the followings, use of a temperature sensor for an indoor unit is recommended.
> - When the room is not well-ventilated and the air does not reach the wall on which the remote controller is installed.
> - When the difference between the temperature of the wall on which the remote controller is installed and the room temperature.
> - When the backside of the wall on which the remote controller is installed is exposed to the outdoor air.
>
> When the temperature changes drastically, the temperature may not be measured accurately.

When a remote controller temperature sensor is used in a place which is likely to be affected by the wall on which the remote controller is installed, use of an optional spacer (Model: PAC-YT83RS) for a remote controller is recommended.
(For how to set the main and sub remote controller, see step (1) "Remote controller" [4]-3. (1) in section 6 Function Selection.
For how to set the temperature sensor, see step (2) "Unit function selection" in section 6 Function Selection.)

(2) When installing on either the switch box or the wall, allow extra space around the remote controller as shown in the figure at the right.

> NOTE: Make sure that there is no wiring or wire near the remote controller sensor. If there is, the remote controller cannot detect the exact room temperature.

(3) Parts which must be supplied on site.
- ・Switch box for two units
- ・Thin-copper wiring pipe
- ・Lock nut and bushing
- ・Surface raceways

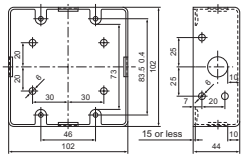

Switch box two units

2. Seal the remote controller cord with putty in order to prevent the possible entry of dew, water droplets, cockroaches, other insects, etc.

When using the switch box
- ・When installing on the switch box, seal the connections between the switch box and wiring pipe with putty.

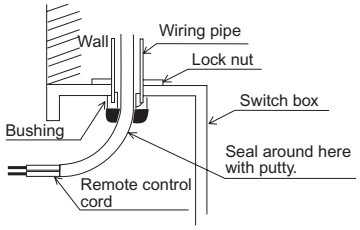

When installing directly on the wall
- ・When opening a hole using a drill for the remote controller cord (or when taking the cord out of the back of the remote controller), seal the hole with putty.
- ・When routing the cord via the portion cut off from the upper cover, similarly seal that portion with putty.
- ・When taking the remote controller cord from back of the controller, use surface raceways.

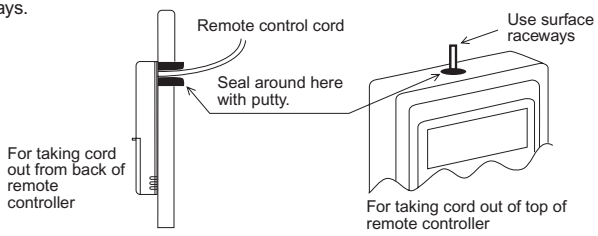

3. Remove the remote controller cover.

- ・Insert a minus screwdriver into one of the open slots and move the screwdriver in the arrow direction.

> ⚠ CAUTION Do not turn the screwdriver in the slot. Doing so may damage the slot.

OPTIONAL PARTS

4. Install the lower case on the switch box or directly on the wall.

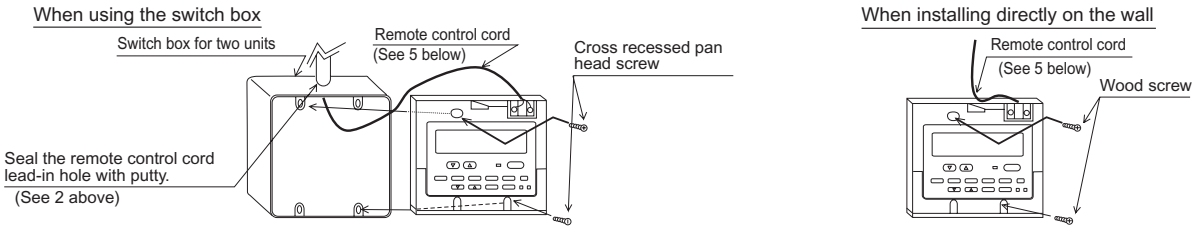

⚠ CAUTION	Do not tighten the screws too tight. Doing so may deform or crack the lower cover.

NOTE: - Choose a flat plane for installation.
- Fasten the switch box at more than two places when installing directly on the wall.
- When reinstalling on the wall, fasten securely using anchors.

5. Connect the remote control cord to the remote controller terminal block.

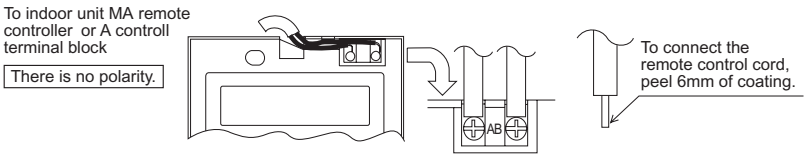

⚠ CAUTION	Do not use crimp terminals to connect to remote controller terminal blocks. The terminals may contact the board and cause trouble or contact the cover and damage the cover.

⚠ CAUTION	Prevent remote cord chips from getting into the remote controller. Electric shock or malfunction may result.

6. Wiring hole for installing directly on the wall (or open wiring)
- ·Cut off the shaded area from the upper cover using a knife, nippers, etc.
- ·Take out the remote control cord connected to the terminal block via this portion.

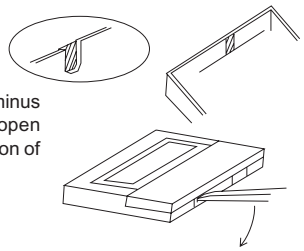

7. Install the cover to the remote controller.

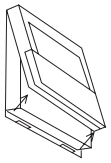

To remove the cover, insert a minus screwdriver into one of the open slots, and move it in the direction of the arrow shown in the figure.

First, hook the cover to the two upper claws and then fit it to the remote controller.

⚠ CAUTION	Press the cover until it snaps shut. If not, it may fall off.	⚠ CAUTION	Do not into turn the screwdriver in the slot. Doing so may damage the slot.

NOTE: A protection sheet is stuck to the operation section. Peel off this protection sheet before use.

3 Test Run

1. Before making a test run, refer to the "Test Run" section of the indoor unit installation manual.
2. Press the [TEST] button twice successively within three seconds. Test run starts.
3. Stop the test run by pressing the [⏻ON/OFF] button.
4. If trouble occurred during the test run, refer to the "Test Run" section of the indoor unit installation manual.

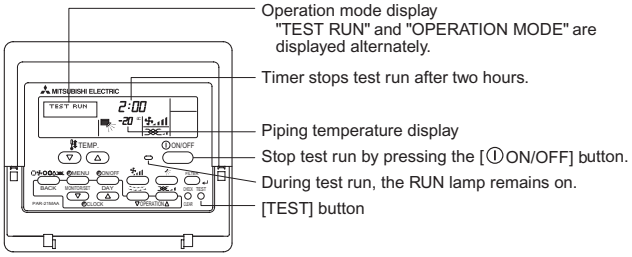

4 Ventilation Setting

Make this setting only when interlocked operation with LOSSNAY is necessary with CITY MULTI models.
(This setting cannot be made with Mr. SLIM air conditioners.)

* When the upper controller is connected, make the setting using the upper controller.

NOTE: When using LOSSNAY units in conjunction, interlock the addresses of all indoor units within the group and address of LOSSNAY units.

Perform this operation when you want to register the LOSSNAY, confirm the registered units, or delete the registered units controlled by the remote controller. The following uses indoor unit address 05 and LOSSNAY address 30 as an example to describe the setting procedure.

[Setting Procedure]

① Stop the air conditioner using the remote controller [⏻ON/OFF] button.
If the OFF display shown below does not appear at this time, step ② cannot be performed.

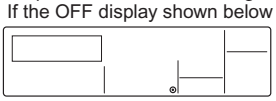

② Press and hold down the [FILTER] and [ ] buttons at the same time for two seconds. The display shown below appears. The remote controller confirms the registered LOSSNAY addresses of the currently connected indoor units.

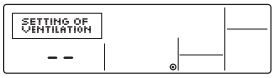

OPTIONAL PARTS

③ Registration confirmation result
- The indoor unit address and registered LOSSNAY address are displayed alternately.

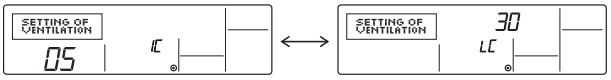

<Indoor unit address and indoor unit display> <LOSSNAY address display and LOSSNAY display>

- When LOSSNAY are not registered

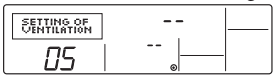

If registration is unnecessary, end registration by pressing and holding down the [FILTER] and [ ] buttons at the same time for two seconds.
If a new LOSSNAY must be registered, go to step **1. Registration procedure**. If you want to confirm another LOSSNAY, go to step **2. Confirmation procedure.** To delete a registered LOSSNAY, go to step **3. Deletion procedure**.

< 1. Registration procedure >

Set the address of the LOSSNAY and the indoor unit connected by the remote controller you want to register using the [TEMP. (▽) and (△)] buttons. (01 to 50)

Set the address of the LOSSNAY you want to register using the [CLOCK (▽) and (△)] buttons. (01 to 50)

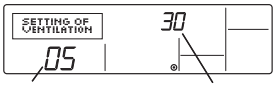

Indoor unit address LOSSNAY address

Press the [TEST] button, and register the set indoor unit address and LOSSNAY address.
- Registration end display
The indoor unit address and "IC" and LOSSNAY address and "LC" are alternately displayed.

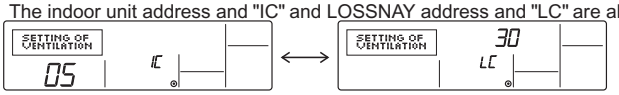

- Registration error display
If the address was not correctly registered, the indoor unit address and registered LOSSNAY address are alternately displayed.

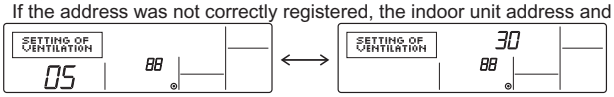

Cannot be registered because the registered indoor unit or LOSSNAY does not exist.
Cannot be registered because another LOSSNAY was registered at the registered indoor unit.

< 2. Confirmation procedure >

Set the address of the indoor unit connected by the remote controller whose LOSSNAY you want to confirm using the [TEMP. (▽) and (△)] buttons. (01 to 50)

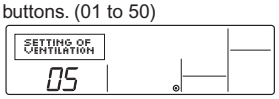

<Indoor unit address>

Press the [MENU] button and confirm the LOSSNAY address registered at the set indoor unit address.
- Confirmation end display (When LOSSNAY is connected.)
The indoor unit address and "IC" and registered LOSSNAY address and "LC" are alternately displayed.

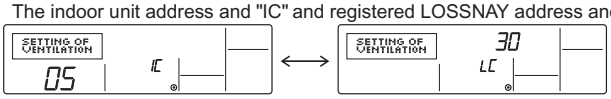

- Confirmation end display (When LOSSNAY is not connected.)

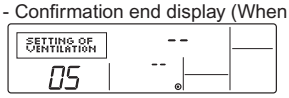

Registered indoor unit address does not exist.

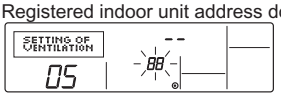

< 3. Deletion procedure >

Use this procedure when you want to delete registration of indoor units connected by the remote controller and LOSSNAY.

10 Confirm (see **2. Confirmation procedure**) the LOSSNAY you want to delete and display the indoor units and LOSSNAY confirmation results.

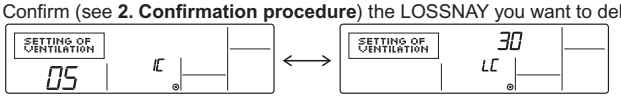

11 Press the [ON/OFF] button twice and delete registration of the LOSSNAY registered at the set indoor unit.
- Deletion end display
Indoor unit address and "––" and registered LOSSNAY address and "––" are alternately displayed.

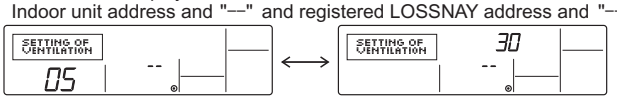

- Deletion error display
When deletion was not performed properly.

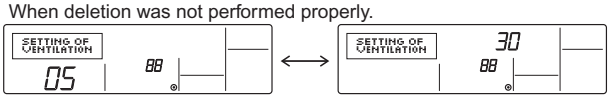

OPTIONAL PARTS

5 Function Selection

(1) Function selection of remote controller

The setting of the following remote controller functions can be changed using the remote controller function selection mode. Change the setting when needed.

Item 1	Item 2	Item 3 (Setting content)
1. Change Language ("CHANGE LANGUAGE")	Language setting to display	•Display in multiple languages is possible.
2. Function limit ("FUNCTION SELECTION")	(1) Operation function limit setting (operation lock) ("LOCKING FUNCTION")	•Setting the range of operation limit (operation lock)
	(2) Use of automatic mode setting ("SELECT AUTO MODE")	•Setting the use or non-use of "automatic" operation mode
	(3) Temperature range limit setting ("LIMIT TEMP FUNCTION")	•Setting the temperature adjustable range (maximum, minimum)
3. Mode selection ("MODE SELECTION")	(1) Remote controller main/sub setting ("CONTROLLER MAIN/SUB")	•Selecting main or sub remote controller * When two remote controllers are connected to one group, one controller must be set to sub.
	(2) Use of clock setting ("CLOCK")	•Setting the use or non-use of clock function
	(3) Timer function setting ("WEEKLY TIMER")	•Setting the timer type
	(4) Contact number setting for error situation ("CALL.")	•Contact number display in case of error •Setting the telephone number
4. Display change ("DISP MODE SETTING")	(1) Temperature display ˚C/˚F setting ("TEMP MODE ˚C/˚F")	•Setting the temperature unit (˚C or ˚F) to display
	(2) Suction air temperature display setting ("ROOM TEMP DISP SELECT")	•Setting the use or non-use of the display of indoor (suction) air temperature
	(3) Automatic cooling/heating display setting ("AUTO MODE DISP C/H"	•Setting the use or non-use of the display of "Cooling" or "Heating" display during operation with automatic mode

[Function selection flowchart]

[1] Stop the air conditioner to start remote controller function selection mode. → [2] Select from item1. → [3] Select from item2. → [4] Make the setting. (Details are specified in item3) → [5] Setting completed. → [6] Change the display to the normal one. (End)

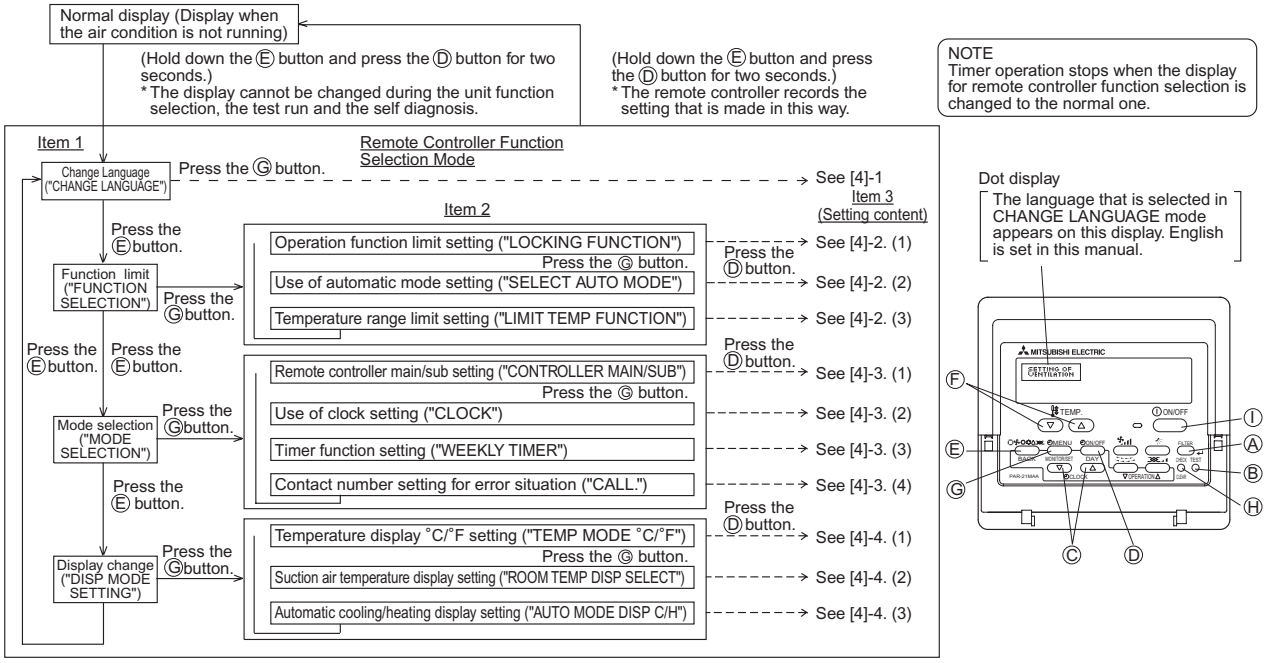

[Detailed setting]

[4] -1. CHANGE LANGUAGE setting

The language that appears on the dot display can be selected.

・ Press the [◴MENU] button to change the language.

① Japanese (JP), ② English (GB), ③ German (D), ④ Spanish (E), ⑤ Russian (RU), ⑥ Italian (I), ⑦ Chinese (CH), ⑧ French (F)

[4] -2. Function limit

(1) Operation function limit setting (operation lock)

・ To switch the setting, press the [◴ON/OFF] button.

① no1 : Operation lock setting is made on all buttons other than the [① ON/OFF] button.

② no2 : Operation lock setting is made on all buttons.

③ OFF (Initial setting value) : Operation lock setting is not made.

* To make the operation lock setting valid on the normal screen, it is necessary to press buttons (Press and hold down the [FILTER] and [① ON/OFF] buttons at the same time for two seconds.) on the normal screen after the above setting is made.

(2) Use of automatic mode setting

When the remote controller is connected to the unit that has automatic operation mode, the following settings can be made.

・ To switch the setting, press the [◴ON/OFF] button.

① ON (Initial setting value) : The automatic mode is displayed when the operation mode is selected.

② OFF : The automatic mode is not displayed when the operation mode is selected.

(3) Temperature range limit setting

After this setting is made, the temperature can be changed within the set range.

・ To switch the setting, press the [◴ON/OFF] button.

① LIMIT TEMP COOL MODE :
The temperature range can be changed on cooling/dry mode.

② LIMIT TEMP HEAT MODE :
The temperature range can be changed on heating mode.

③ LIMIT TEMP AUTO MODE :
The temperature range can be changed on automatic mode.

④ OFF (initial setting) : The temperature range limit is not active.

* When the setting, other than OFF, is made, the temperature range limit setting on cooling, heating and automatic mode is made at the same time. However, the range cannot be limited when the set temperature range has not changed.

・ To increase or decrease the temperature, press the [TEMP (▽) or (△)] button.

・ To switch the upper limit setting and the lower limit setting, press the [ ] button. The selected setting will flash and the temperature can be set.

・ Settable range

Cooling/Dry mode :	Lower limit: 19˚C ~ 30˚C	Upper limit: 30˚C ~ 19˚C
Heating mode :	Lower limit: 17˚C ~ 28˚C	Upper limit: 28˚C ~ 17˚C
Automatic mode :	Lower limit: 19˚C ~ 28˚C	Upper limit: 28˚C ~ 19˚C

* The settable range varies depending on the unit to connect (Mr. Slim units, Free-plan units, and intermediate temperature units)

[4] -3. Mode selection setting

(1) Remote controller main/sub setting

・ To switch the setting, press the [◴ON/OFF] button.

① Main : The controller will be the main controller.

② Sub : The controller will be the sub controller.

OPTIONAL PARTS

(2) Use of clock setting
・ To switch the setting, press the [◴ON/OFF] button.
① ON : The clock function can be used.
② OFF : The clock function cannot be used.

(3) Timer function setting
・ To switch the setting, press the [◴ON/OFF] button (Choose one of the followings.).
① WEEKLY TIMER (initial setting on MA deluxe): The weekly timer can be used.
② AUTO OFF TIMER: The auto off timer can be used.
③ SIMPLE TIMER (Default setting on MA smooth): The simple timer can be used.
④ TIMER MODE OFF: The timer mode cannot be used.
* When the use of clock setting is OFF, the "WEEKLY TIMER" cannot be used.

(4) Contact number setting for error situation
・ To switch the setting, press the [◴ON/OFF] button.
① CALL OFF : The set contact numbers are not displayed in case of error.
② CALL **** *** **** : The set contact numbers are displayed in case of error.
CALL_ : The contact number can be set when the display is as shown on the left.
・ Setting the contact numbers
To set the contact numbers, follow the following procedures.
Move the flashing cursor to set numbers. Press the [🌡 TEMP. (▽) and (△)] button to move the cursor to the right (left). Press the [◴CLOCK (▽) and (△)] button to set the numbers.

[4] -4. Display change setting
(1) Temperature display ˚C/˚F setting
・ To switch the setting, press the [◴ ON/OFF] button.
① C: The temperature unit ˚C is used.
② F: The temperature unit ˚F is used.

(2) Suction air temperature display setting
・ To switch the setting, press the [◴ON/OFF] button.
① ON : The suction air temperature is displayed.
② OFF : The suction air temperature is not displayed.

(3) Automatic cooling/heating display setting
・ To switch the setting, press the [◴ON/OFF] button.
① ON : One of "Automatic cooling" and "Automatic heating" is displayed under the automatic mode is running.
② OFF : Only "Automatic" is displayed under the automatic mode.

(2) Unit Function Selection Perform only when change is necessary with Mr. SLIM air conditioner.
(Cannot be performed with CITY MULTI control system.)

Set the functions of each indoor unit from the remote controller, as required. The functions of each indoor unit can be selected only from the remote controller.
Set the functions by selecting the necessary items from Table 1.
Table 1. Function selection contents (For a detailed description of the factory settings and mode of each indoor unit, refer to the indoor unit installation manual.)

Function	Settings	Mode No.	Setting No.	Check	Object unit address No.
Power failure automatic recovery	Not available	01	1		Unit address No. 00
	Available (Approximate 4 minutes wait-period after power is restored.)	01	2		
Indoor temperature detecting	Indoor unit operating average	02	1		
	Set by indoor unit's remote controller	02	2		
	Remote controller's internal sensor	02	3		These items are set for all indoor units.
LOSSNAY connectivity	Not Supported	03	1		
	Supported (indoor unit is not equipped with outdoor-air intake)	03	2		
	Supported (indoor unit is equipped with outdoor-air intake)	03	3		
AUTO mode	Energy saving cycle automatically enabled	05	1		
	Energy saving cycle automatically disabled	05	2		
Filter sign	100 Hr	07	1		Unit address No. 01 to 04 or AL
	2500 Hr	07	2		
	No filter sign indicator	07	3		
Fan speed	Quiet	08	1		
	Standard	08	2		
	High ceiling	08	3		
No. of air outlets	4 directions	09	1		
	3 directions	09	2		
Installed options	Not supported	10	1		These items are set for each indoor unit.
	Supported	10	2		
Up/down vane setting	No vanes	11	1		
	Equipped with vanes (No. 1 set)	11	2		
	Equipped with vanes (No. 2 set)	11	3		
Energy saving air flow	Disabled	12	1		
	Enabled	12	2		
Humidifier	Not supported	13	1		
	Supported	13	2		

NOTE: When the indoor unit functions were changed using the function selection after installation is complete, always indicate the set contents by entering O or other mark in the appropriate check field of Table 1.

[Function selection flow]
First grasp the function selection flow. The following describes setting of "Room temperature detection position" of Table 1 as an example.
(For the actual setting procedure, see [Setting procedure] ① to ⑩.)

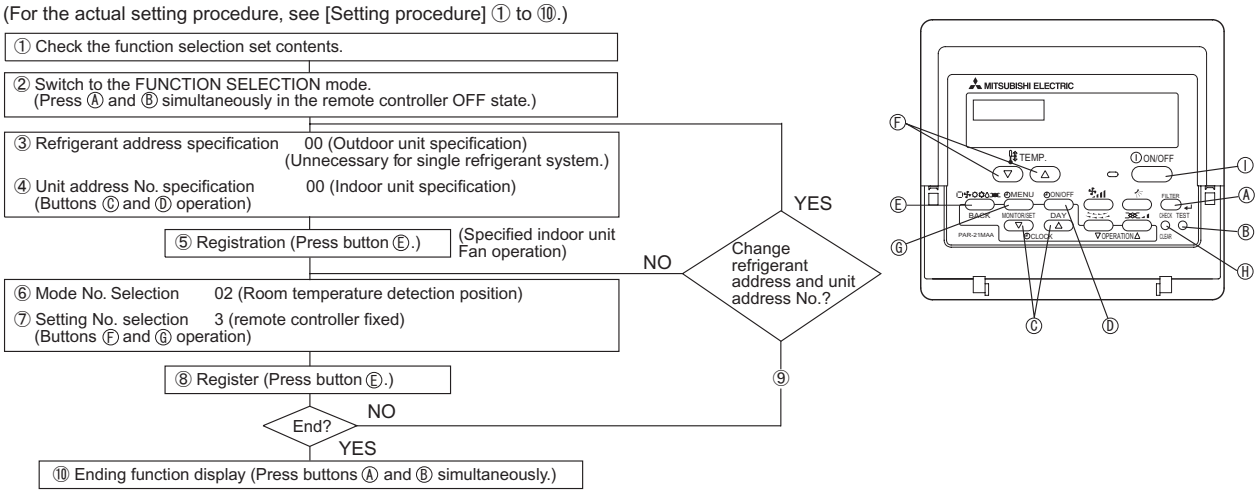

OPTIONAL PARTS

[Procedure] (Set only when change is necessary.)

① Check the set contents of each mode. When the set contents of a mode were changed by function selection, the functions of that mode also change.
Check the set contents as described in steps ③ to ⑦ and change the setting based on the entries in the Table 1 check field. For the factory settings, refer to the indoor unit installation manual.

② Set the remote controller to Off.
Press and hold down the Ⓐ [FILTER] and Ⓑ [TEST] buttons at the same time for two seconds or longer.
"FUNCTION SELECTION" blinks for a while, then the remote controller display changes to the display shown below.

③ Set the outdoor unit refrigerant address No.
When the Ⓒ [◴CLOCK (▽) and (△)] buttons are pressed, the refrigerant address No. decreases and increases between 00 and 15. Set it to the refrigerant address No. whose function you want to select.
(This step is unnecessary for single refrigerant system.)

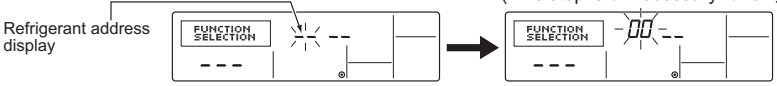

* If the remote controller enters the OFF state after the "FUNCTION SELECTION" and room temperature displays " 88 " have flashes for two seconds, communication is probably abnormal. Make sure there are no noise sources near the transmission line.

NOTE: If you make a mistake during operation, end function selection by step ⑩ and repeat selection from step ②.

④ Set the indoor unit address No.
Press the Ⓓ [◴ON/OFF] button. The unit address No. display "- -" flashes.

When the Ⓒ [◴CLOCK (▽) and (△)] buttons are pressed, the unit address No. changes in 00 → 01 →02 → 03 → 04 → AL order. Set it to the unit address No. of the indoor unit whose functions you want to set.

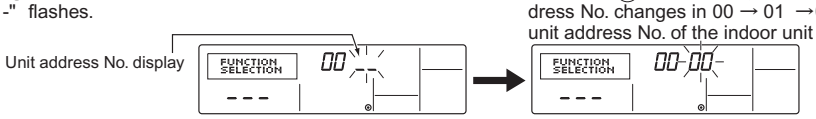

* When setting mode 1 to 3, set the unit address No. to "00".
* When setting modes 7 to 11:
  - When setting for each indoor unit, set the unit address No. to "01-04".
  - When batch setting for all indoor units, set the unit address No. to "AL".

⑤ Refrigerant address and unit address No. registration
Press the Ⓔ [□✤☼☼⌂⌫] button. The refrigerant address and unit address No. are registered.
After a while, the mode No. display "- -" flashes.

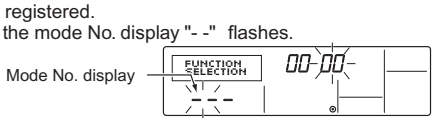

* When " 88 " flashes at the room temperature display, the selected refrigerant address is not in the system.
When "F" is displayed at the unit address No. display, and when it flashes together with the refrigerant address display, the selected unit address No. does not exist. Correctly set the refrigerant address and unit address No. by repeating steps ② and ③.

When registered using the Ⓔ [□✤☼☼⌂⌫] button, the registered indoor unit begins fan operation. When you want to know the location of the indoor units of the unit address No. whose functions were selected, check here. When the unit address No. is 00 or AL, all the indoor units of the selected refrigerant address perform the fan operation.

Ex) When refrigerant address 00, unit address No. = 02 registered

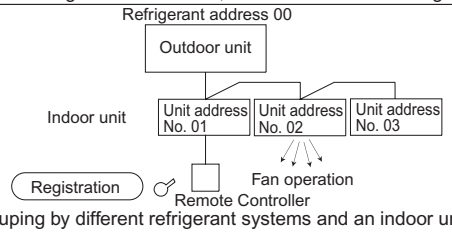

* When grouping by different refrigerant systems and an indoor unit other than the specified refrigerant address performs the fan operation, the refrigerant address set here is probably duplicated.
Recheck the refrigerant address at the outdoor unit rotary switches.

⑥ Mode No. selection
Select the mode No. you want to set with the Ⓕ [🌡 TEMP. (▽) and (△)] buttons. (Only the settable mode numbers can be selected.)

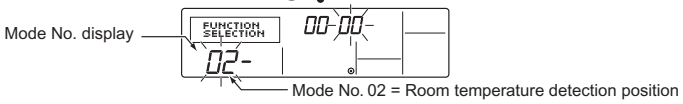

⑦ Select the setting contents of the selected mode.
When the Ⓖ [◴MENU] button is pressed, the current setting No. flashes. Use this to check the currently set contents.

Select the setting No. using the Ⓕ [🌡 TEMP. (▽) and (△)] buttons.

⑧ The contents set at steps ③ to ⑦ are registered.
When the Ⓔ [□✤☼☼⌂⌫] button is pressed, the mode No. and setting No. flash and registration begins. The flashing mode No. and setting No. change to a steady light and setting ends.

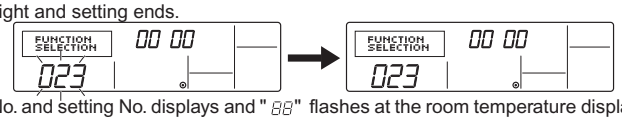

* When "- -" appears at the mode No. and setting No. displays and " 88 " flashes at the room temperature display, communication is probably abnormal. Make sure there are no noise sources near the transmission line.

⑨ To select more functions, repeat steps ③ to ⑧.

⑩ End function selection.
Press and hold down the Ⓐ [FILTER] and Ⓑ [TEST] buttons at the same time for two seconds or longer.
After a while, the function selection display disappears and the remote controller returns to the air conditioner off display.

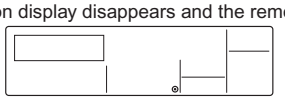

* Do not operate the air conditioner from the remote controller for 30 seconds after the end of function selection.

NOTE: When the functions of an indoor unit were changed by function selection after the end of installation, always indicate the set contents by entering a ○ or other mark in the appropriate check field of Table 1.

6 Self check

Retrieve the error history of each unit using the remote controller.

① Switch to the self check mode.
When the Ⓗ [CHECK] button is pressed twice successively within three seconds, the display shown below appears.

② Set the address or refrigerant address No. you want to self check.
When the Ⓕ [TEMP. (▽) and (△)] buttons are pressed, the address decreases and increases between 01 and 50 or 00 and 15. Set it to the address No. or refrigerant address No. you want to self check.

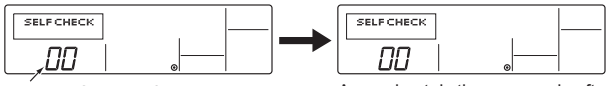

Self check address or self check refrigerant address

Approximately three seconds after the change operation, the self check refrigerant address changes from flashing to a steady light and self check begins.

③ Self check result display <Error history> (For the contents of the error code, refer to the indoor unit installation manual or service handbook.)

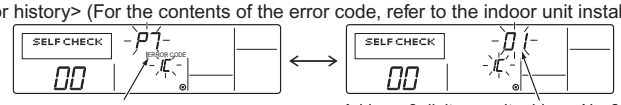

Error code 4 digits or error code 2 digits

Address 3 digits or unit address No. 2 digits

<When there is no error history>

<When opposite side does not exist>

④ Error history reset
The error history is displayed in ③ Self check results display.

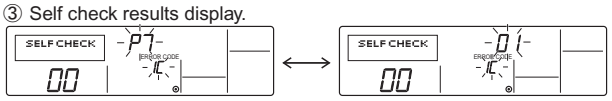

When the [◷MENU] button is pressed twice successively within three seconds, the self check address or refrigerant address flashes.

When the error history was reset, the display shown below appears.
When error history reset failed, the error contents are displayed again.

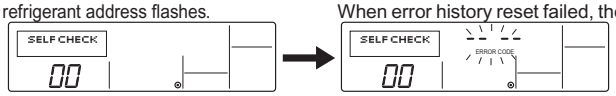

⑤ Self check reset
There are the following two ways of resetting self check.
Press the Ⓗ[CHECK] button twice successively within three seconds. Resets self check and returns to the state before self check.
Press the ⓘ[ⓘ ON/OFF] button Self check resets and indoor units stop.
(When operation is prohibited, this operation is ineffective.)

7 Remote Controller Check

When the air conditioner cannot be controlled from the remote controller, use this function to check the remote controller.

① First check the power mark.
When normal voltage (DC12V) is not applied to the remote controller, the power mark goes off.
When the power mark is off, check the remote controller wiring and the indoor unit.

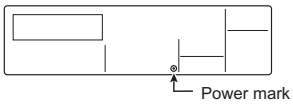

Power mark

② Switch to the remote controller check mode.
When the Ⓗ [CHECK] button is held down for five seconds or longer, the display shown below appears.

When the Ⓐ [FILTER] button is pressed, remote controller check begins.

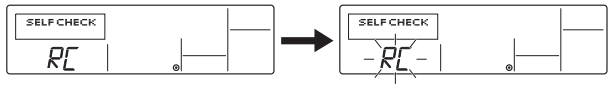

③ Remote controller check result

When remote controller is normal

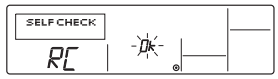

Since there is no problem at the remote controller, check for other causes.

When remote controller is faulty

(Error display 1) "NG" flashes Remote controller send/receive circuit abnormal

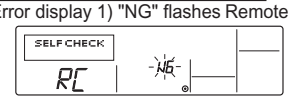

Remote controller switching is necessary.

When the problem is other than the checked remote controller

(Error code 2) "E3" "6833" "6832" flash → Cannot send

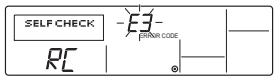

There is noise on the transmission line, or the indoor unit or another remote controller is faulty. Check the transmission line and the other remote controllers.

(Error display 3) "ERC" and data error count are displayed → Data error generation

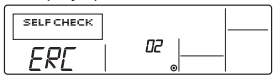

"Data error count" is the difference between the number of bits of remote controller send data and the number of bits actually sent to the transmission line. In this case, the send data was disturbed by the noise, etc. Check the transmission line.

When data error count is 02

Remote controller send data
Send data on transmission line

④ Remote controller check reset
When the Ⓗ[CHECK] button is held down for five seconds or longer, remote controller check resets and the "PLEASE WAIT" and RUN lamp flash. Approximately 30 seconds later, the remote controller returns to the state before remote controller check.

OPTIONAL PARTS

Wired Remote Controller Kit for Wall Mounted models PAR-21MAAT-E

Photo

Descriptions

Enables the use of wired remote controller (PAR-21MAA) for wall mounted models.

Applicable Models

- PKA-RP HAL
- PKA-RP KAL

Specifications

Terminal block capacity	10A/250V
Applicable wire	Φ1.6mm or less
Terminal block material	Phenol resin

Dimensions

Unit : mm

Terminal block

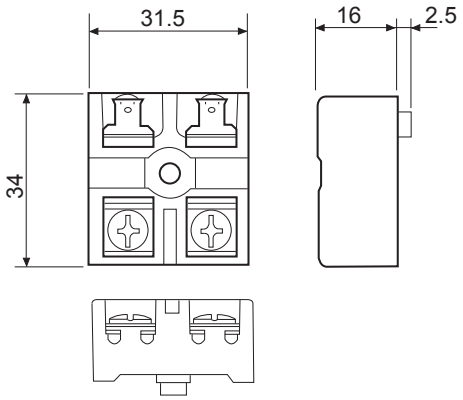

Lead wire

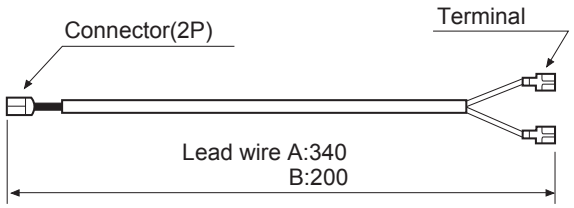

Wiring Diagram

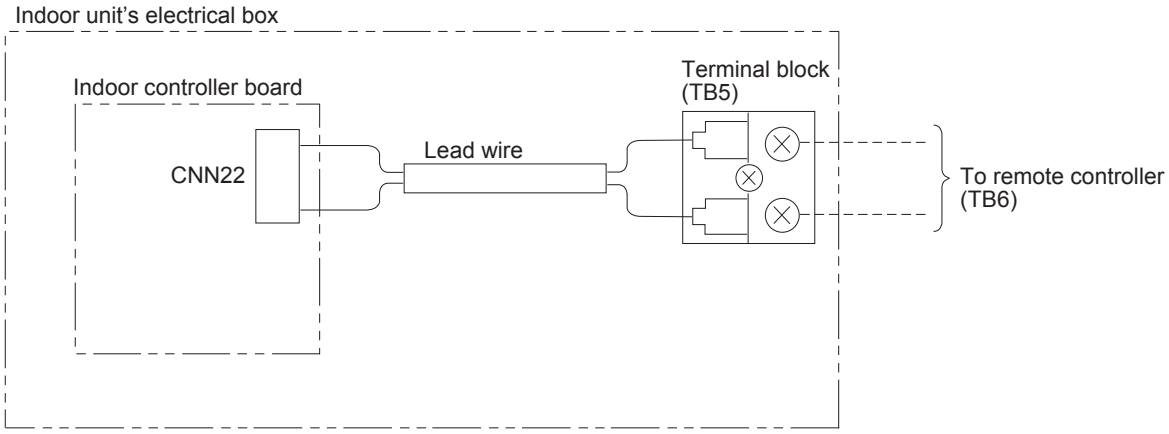

OPTIONAL PARTS

1 Confirming the Supplied Parts

Check that the box includes the following parts in addition to this installation manual.

Parts Name	PAR-21MAAT-E
① Terminal block	1
② Cross-recessed tapping screw	1
③ Lead wire A (ℓ = 340 mm)	1
④ Lead wire B (ℓ = 200 mm)	1
⑤ Remote controller (Upper case/Lower case)	1
⑥ Remote controller cord	1
⑦ Cross-recessed pan-head screw	2
⑧ Wood screw (Use for installing on the wall)	2

2 Installing the terminal block

(1) PKH-P • GALH/PKA-RP • GAL

① Open the front grille and remove the screw (× 1) to remove the terminal block cover.
② Disconnect the connector which is a wireless remote controller relay line. (with pressing the hook)
③ Remove the screw cap and screw (× 3).
④ Place the Auto vane as illustrated and remove the bottom of the front panel first.
⑤ Remove the screw (× 1) to remove the p.c. board cover.
⑥ Secure the terminal block (TB5) to the electrical box with cross-recessed tapping screws.
⑦ Connect the lead wire A to the terminal block (TB5) and the connector (CN22) in the indoor p.c. board. (Lead wire should be run though the clamp pointed by the arrow.)
⑧ Connect the transmission lines of the wired remote controller and 2 or group remote controller to the bottom of the terminal block (TB5) (screw terminal).
⑨ Install the panel, terminal block cover, p.c. board or connector as they had formed first.

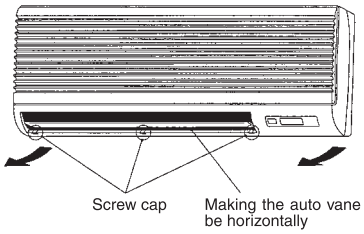

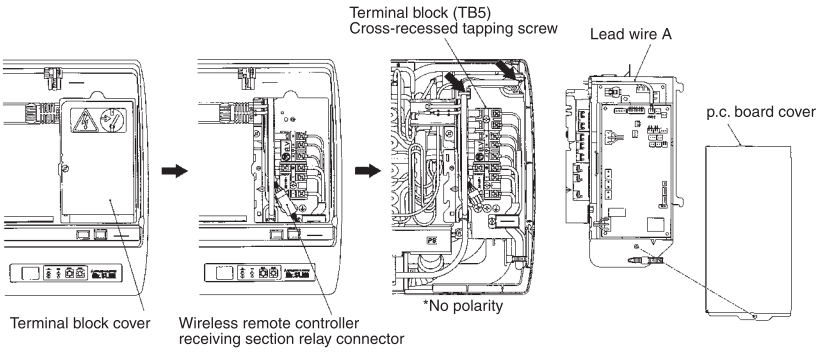

(2) PKH-P • FALH/PKA-RP • FAL

① Remove the side panel screws (×2) to remove the side panel.
② Remove the side panel and disconnect the remote controller relay connector.
③ Remove the screw (×1) and terminal block (TB5) cover.
④ Remove the screw (×1) and p.c. board cover.
⑤ Remove the screw (×1) and terminal block cover installing piece.
⑥ Secure the terminal block (TB5) to the electrical box with crossrecessed tapping screw.
⑦ Connect the lead wire B to the terminal block (TB5) and connector (CN22) in the indoor p.c. board.
⑧ Connect the transmission lines of the wired remote controller and 2 or group remote controller to the bottom of the terminal block (TB5) (screw terminal block).
⑨ Install the panel, terminal block cover, p.c. board cover or connector as they had formed first.

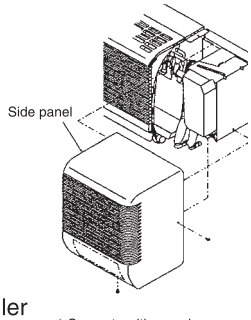

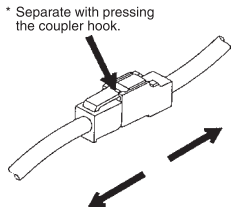

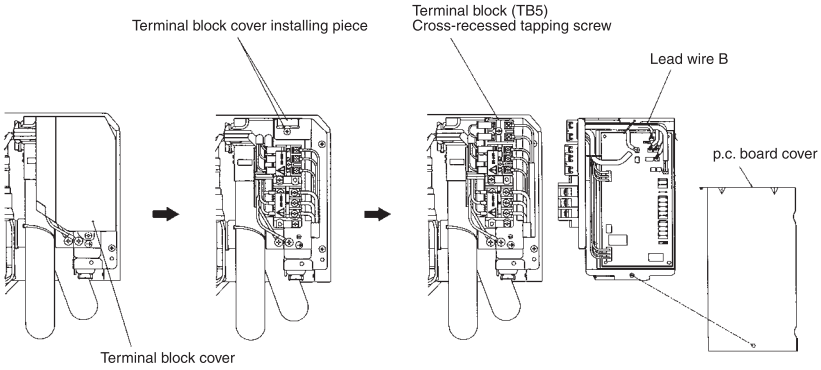

OPTIONAL PARTS

3 Transmission line wiring

As system configurations differ for remote controller wiring, execute wiring in accordance with the following example.
- The numbers ①, ② and ③ in the chart correspond to items ①, ② and ③ below.

(1) When remote controllers are connected to each refrigerant system
(Standard 1:1, simultaneous twin, and simultaneous triple)

[Example]

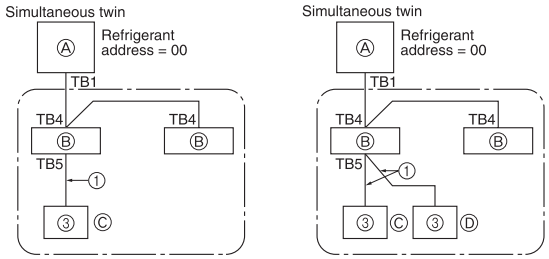

(2) Other refrigerant system groupings
- Set the refrigerant address using the DIP switch of the outdoor unit. (See the technical manual for details.)
- In this case, all the indoor units enclosed in the broken-line ⬚ can be controlled as one group.

① Wiring from the Remote Control
- This wire is connected to TB5 (terminal block for remote controller) of the indoor unit (non-polar).
- If different types of indoor units are mixed together in the simultaneous multiple group, surely connect the remote controller to the indoor unit with the most functions (fan speed, vane, louver, etc.).

② When a Different Refrigerant System Grouping is Used.
- Group the system using the remote controller wiring. Execute crossover wiring of the remote controller wire to any single indoor unit of the refrigerant system to be grouped.
- If different types of indoor units are mixed together in the same group, be sure to make the main unit (refrigerant address = 00) the indoor unit with the most functions (fan speed, vane, louver, etc.).
- Also if new type belongs to simultaneous multiple group, be sure to fulfill the above conditions ①.

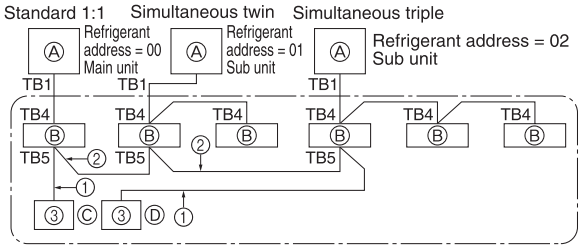

- Up to 16 refrigerant systems can be controlled as one group using the slim A remote controller.

NOTES:
- Crossover wiring to the indoor unit (TB5) of the same refrigerant system is not allowed. If such crossover wiring is executed, the system will not operate correctly.
- Crossover wiring between remote controllers is not allowed. There is only one terminal block on the remote controller for wiring.

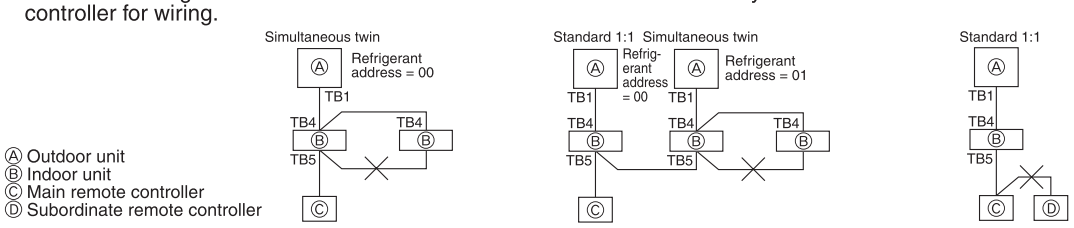

③ Up to two remote controllers can be connected to a single group.
- Be sure to designate the main remote controller and the subordinate remote controller if two remote controllers are used in one group.
- If a group only has a single remote controller, it automatically becomes the main controller. But if a group has two remote controllers, one must be designated as the main remote controller and the other as the subordinate remote controller. (For how to set the main and subordinate switch, see step (2) in (7 Function Settings).)
- Remote controller wiring can be extended up to a maximum of 500 meters. Note, however, that the supplied remote controller cord is 3 meters or less. A 0.3 mm^2 to 1.25 mm^2 power cable must be acquired locally if more than 3 meters is needed.

⚠CAUTION Remote controller wiring
- Avoid using multicore cable as malfunctions may occur.
- As much as possible, keep the remote controller wire away from grounding items (steel frames of buildings or metal, etc.).

4 How To Install

(1) Choose a place in which to install the remote controller (switch box). Be sure to observe the following steps:

① Temperature sensors are provided with both the remote controller and the indoor units. When using the remote control temperature sensors, the main remote controller detects the room temperature. Install the main remote controller in a place where the average room temperature can be detected and also which is not affected by any heat source from direct sunlight or air blown from air conditioning units.
(For how to set the main/subordinate remote controller, see step (2) in 7 Function Settings and for how to set the temperature sensor, see 7 Function Settings.)

② When installing on either the switch box or the wall, allow extra space around the remote controller as shown in the figure on the right. (When using it in combination with a Program timer, see the installation manual for the Program timer.)

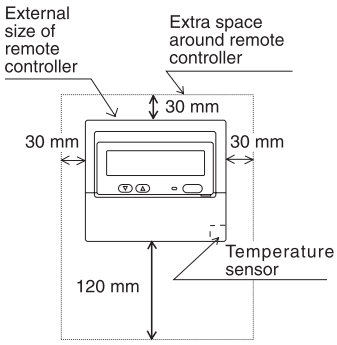

NOTE: Make sure that there is no wiring or wire near the remote controller sensors. If there is, the remote controller cannot detect the exact room temperature.

③ Procure the following Parts locally.
- Switch box for two units
- Thin copper conduit tube
- Lock nuts and bushings

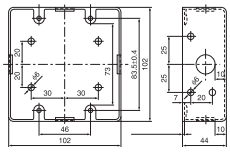

Switch box two units

(2) Seal the remote controller cord lead-in hole with putty in order to prevent the possible entry of dew, water droplets, cockroaches, other insects, etc.

- When installing on the switch box, seal the connections between the switch box and wiring pipe with putty.

When using the switch box

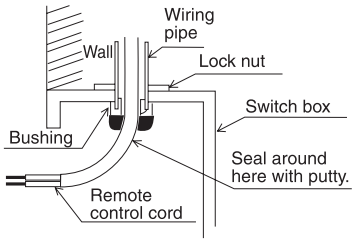

- When opening a hole using a drill for the remote control cord (or taking the cord out of the back of the remote control), seal that hole with putty.
- When routing the cord via the portion cut off from the upper case, equally seal that portion with putty.

When installing directly on the wall

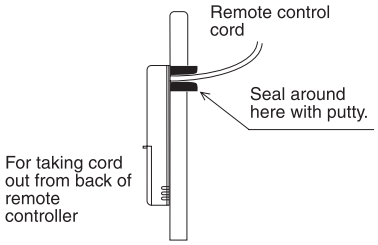

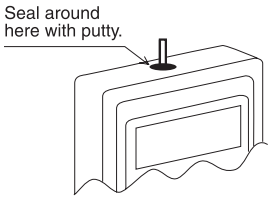

For taking cord out of top of remote controller

OPTIONAL PARTS

(3) Install the lower case on the switch box or directly on the wall.

⚠CAUTION Do not tighten the screws too much. Doing so may result in a deformation or crack of the lower case.

NOTES:
- Choose a flat plane for installation.
- Fix the switch box at more than two places when installing directly on the wall.

When using the switch box

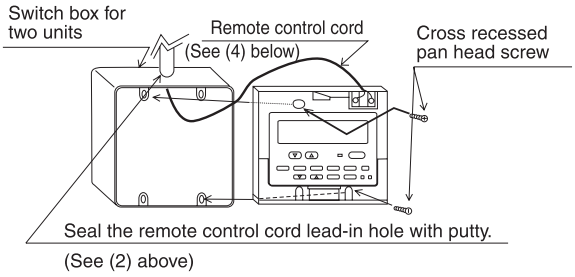

When installing directly on the wall

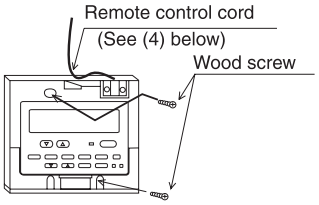

(4) Connect the remote control cord to the remote controller terminal block.

Wire correctly referring to the following figure.

⚠CAUTION Do not use crimp terminals to connect to remote controller terminal blocks. The terminals may contact the board and cause trouble or contact the cover and damage the cover.

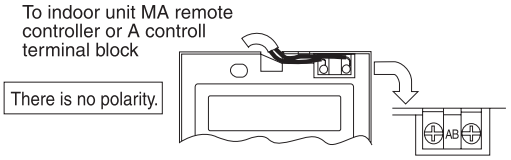

(5) Wiring hole for installing directly on the wall (or open wiring)

- Cut off the shaded area from the upper cover using a knife, nippers, etc.
- Take out the remote control cord connected to the terminal block via this portion.

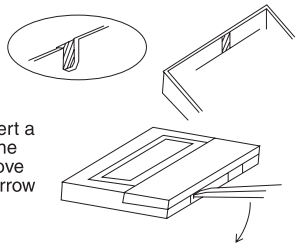

(6) Install the cover to the remote controller.

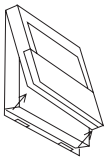

To remove the cover, insert a minus screwdriver into one of the open slots, and move it in the direction of the arrow shown in the figure.

First, hook the cover to the two upper claws and then fit it to the remote controller.

⚠CAUTION
- Press the cover until it snaps shut. If not, it may fall off.
- Do not into turn the screwdriver in the slot. Doing so may damage the slot.

NOTE: A protection sheet is stuck to the operation section. Peel off this protection sheet before use.

OPTIONAL PARTS

(7) Affix a caution label.

A caution label in English is supplied on the back surface of the control panel door. Affix another caution label in the language of a country where you use the remote control over the English one.

5 Test Run

(1) Before test run

- After completing installation and the wiring and piping of the indoor and outdoor units, check for refrigerant leakage, looseness in the power supply or control wiring, wrong polarity, and no disconnection of one phase in the supply.
- Use a 500-volt megohmmeter to check that the resistance between the power supply terminals and ground is at least 1.0 MΩ.
- Do not carry out this test on the control wiring (low voltage circuit) terminals.

⚠WARNING Do not use the air conditioner if the insulation resistance is less than 1.0 MΩ.

(2) Test run

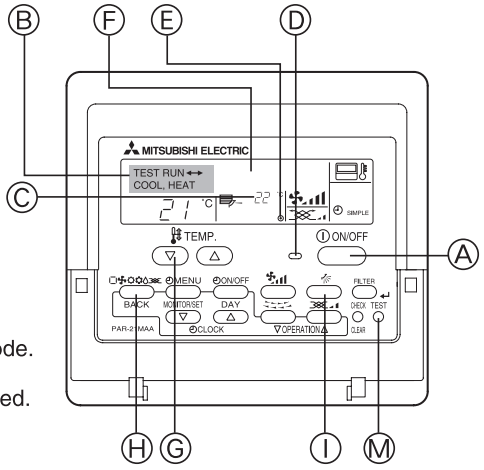

Ⓐ ON/OFF button
Ⓑ Test run display
Ⓒ Indoor temperature liquid line temperature display
Ⓓ ON/OFF lamp
Ⓔ Power display
Ⓕ Error code display
Test run remaining time display
Ⓖ Set temperature button
Ⓗ Mode selection button
Ⓘ Fan speed button
Ⓜ TEST button

① Turn on the power at least 12 hours before the test run.
② Press the [TEST] button twice. ➡ "TEST RUN" liquid crystal display
③ Press the [Mode selection] button. ➡ Make sure that wind is blown out.
④ Press the [Mode selection] button and switch to the cooling (or heating) mode.
➡ Make sure that cold (or warm) wind is blown out.
⑤ Press the [Fan speed] button. ➡ Make sure that the wind speed is switched.
⑥ Check operation of the outdoor unit fan.
⑦ Release test run by pressing the [ON/OFF] button. ➡ Stop
⑧ Register a telephone number.
The telephone number of the repair shop, sales office, etc., to contact if an error occurs can be registered in the remote controller. The telephone number will be displayed when an error occurs. For registration procedures, refer to the operation manual for the indoor unit.

NOTE: It is not possible to run the in FAN, DRY or AUTO mode.

6 Function Settings

(1) Function setting on the unit (Selecting the unit functions)

Changing the power voltage setting

- Be sure to change the power voltage setting depending on the voltage used.

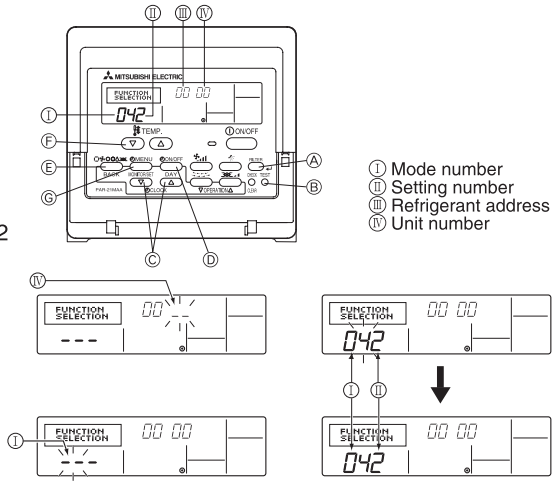

Ⅰ Mode number
Ⅱ Setting number
Ⅲ Refrigerant address
Ⅳ Unit number

① Go to the function setting mode. Switch OFF the remote controller. Press the Ⓐ and Ⓑ buttons simultaneously and hold them for at least 2 seconds. FUNCTION will start to flash.
② Use the Ⓒ button to set the refrigerant address (Ⅲ) to 00.
③ Press Ⓓ and [--] will start to flash in the unit number (Ⅳ) display.
④ Use the Ⓒ button to set the unit number (Ⅳ) to 00.
⑤ Press the Ⓔ MODE button to designate the refrigerant address/unit number. [--] will flash in the mode number (Ⅰ) display momentarily.
⑥ Press the Ⓕ buttons to set the mode number (Ⅰ) to 04.
⑦ Press the Ⓖ button and the current set setting number (Ⅱ) will flash. Use the Ⓕ button to switch the setting number in response to the power supply voltage to be used.
Power supply voltage
240 V : setting number = 1
220 V, 230 V : setting number = 2
⑧ Press the MODE button Ⓔ and mode and the setting number (Ⅰ) and (Ⅱ) will change to being on constantly and the contents of the setting can be confirmed.
⑨ Press the FILTER Ⓐ and TEST RUN Ⓑ buttons simultaneously for at least two seconds. The function selection screen will disappear momentarily and the air conditioner OFF display will appear.

OPTIONAL PARTS

Function table

Select unit number 00

Mode	Settings	Mode no.	Setting no.	setting
Power failure automatic recovery	Not available	01	1	
	Available *1		2	
Indoor temperature detecting	Indoor unit operating average	02	1	
	Set by indoor unit's remote controller		2	
	Remote controller's internal sensor		3	
LOSSNAY connectivity	Not Supported	03	1	
	Supported (indoor unit is not equipped with outdoor-air intake)		2	
	Supported (indoor unit is equipped with outdoor-air intake)		3	
Power voltage	240 V	04	1	
	220 V, 230 V		2	
Auto mode (only for PUHZ)	Energy saving cycle automatically enabled	05	1	
	Energy saving cycle automatically disabled		2	

Select unit numbers 01 to 03 or all units (AL [wired remote controller])

Mode	Settings	Mode no.	Setting no.	setting
Filter sign	100Hr	07	1	
	2500Hr		2	
	No filter sign indicator		3	

*1 When the power supply returns, the air conditioner will start 3 minutes later.
*2 Power failure automatic recovery initial setting depends on the connecting outdoor unit.

(2) Function selection of remote controller

The setting of the following remote controller functions can be changed using the remote controller function selection mode. Change the setting when needed.

Item 1	Item 2	Item 3 (Setting content)
1. Change Language ("CHANGE LANGUAGE")	Language setting to display	• Display in multiple languages is possible
2. Function limit ("FUNCTION SELECTION")	(1) Operation function limit setting (operation lock) ("LOCKING FUNCTION")	• Setting the range of operation limit (operation lock)
	(2) Use of automatic mode setting ("SELECT AUTO MODE")	• Setting the use or non-use of "automatic" operation mode
	(3) Temperature range limit setting ("LIMIT TEMP FUNCTION")	• Setting the temperature adjustable range (maximum, minimum)
3. Mode selection ("MODE SELECTION")	(1) Remote controller main/sub setting ("CONTROLLER MAIN/SUB")	• Selecting main or sub remote controller *When two remote controllers are connected to one group, one controller must be set to sub.
	(2) Use of clock setting ("CLOCK")	• Setting the use or non-use of clock function
	(3) Timer function setting ("WEEKLY TIMER")	• Setting the timer type
	(4) Contact number setting for error situation ("CALL.")	• Contact number display in case of error • Setting the telephone number
4. Display change ("DISP MODE SETTING")	(1) Temperature display °C/°F setting ("TEMP MODE °C/°F")	• Setting the temperature unit (°C or °F) to display
	(2) Suction air temperature display setting ("ROOM TEMP DISP SELECT")	• Setting the use or non-use of the display of indoor (suction) air temperature
	(3) Automatic cooling/heating display setting ("AUTO MODE DISP C/H")	• Setting the use or non-use of the display of "Cooling" or "Heating" display during operation with automatic mode

[Function selection flowchart]
Setting language (English)

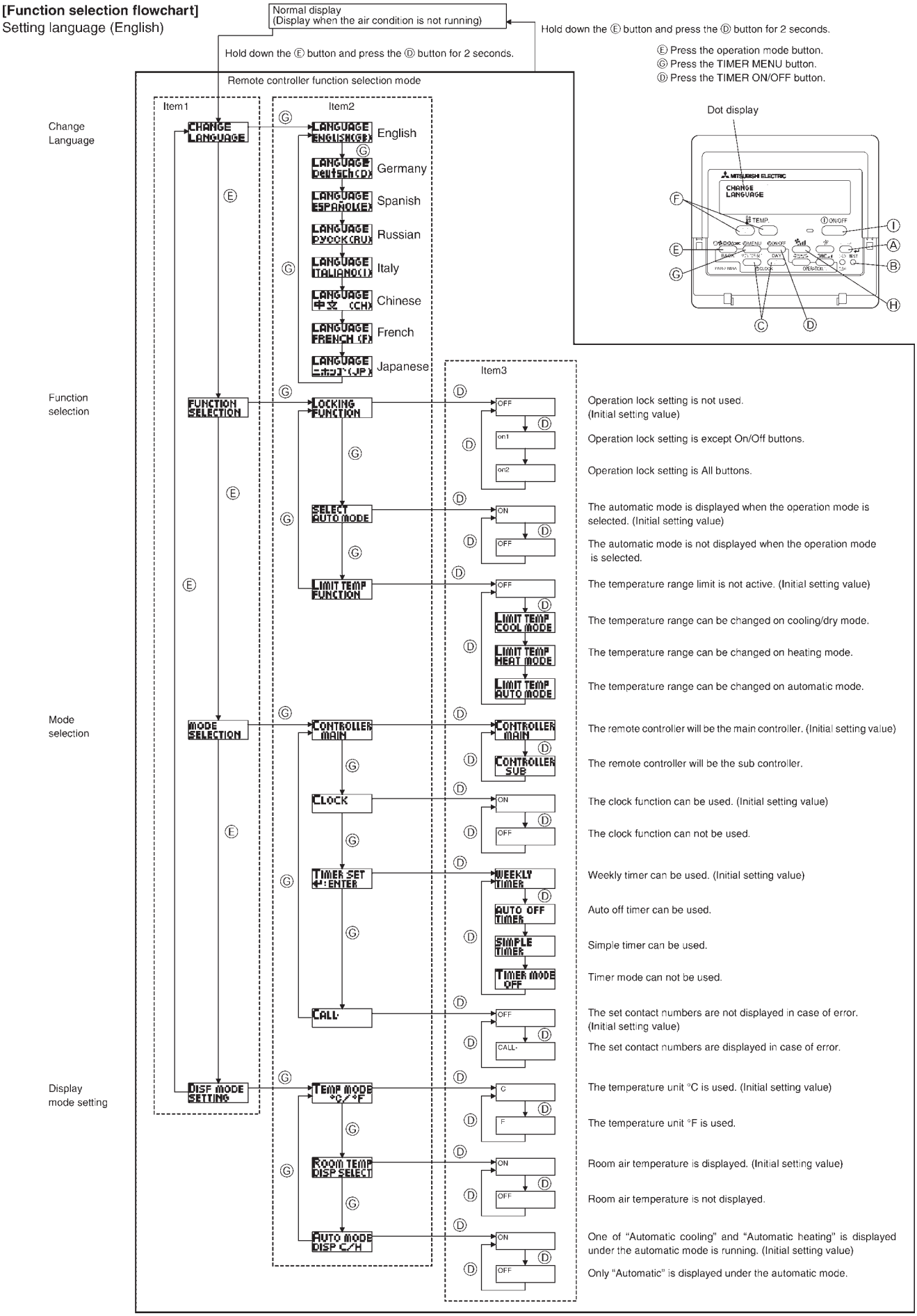

OPTIONAL PARTS

[Detailed setting]

[4]–1. CHANGE LANGUAGE setting

The language that appears on the dot display can be selected.

- Press the [◴MENU] button Ⓖ to change the language.
  ① English (GB), ② German (D), ③ Spanish (E), ④ Russian (RU), ⑤ Italian (I), ⑥ Chinese (CH), ⑦ French (F), ⑧ Japanese (JP)

Refer to the dot display table.

[4]–2. Function limit

(1) Operation function limit setting (operation lock)

- To switch the setting, press the [◴ON/OFF] button Ⓓ.
  ① no1 : Operation lock setting is made on all buttons other than the [①ON/OFF] button.
  ② no2 : Operation lock setting is made on all buttons.
  ③ OFF (Initial setting value): Operation lock setting is not made.

* To make the operation lock setting valid on the normal screen, it is necessary to press buttons (Press and hold down the [FILTER] and [①ON/OFF] buttons at the same time for two seconds.) on the normal screen after the above setting is made.

(2) Use of automatic mode setting

When the remote controller is connected to the unit that has automatic operation mode, the following settings can be made.

- To switch the setting, press the [◴ON/OFF] button Ⓓ.
  ① ON (Initial setting value):
  The automatic mode is displayed when the operation mode is selected.
  ② OFF:
  The automatic mode is not displayed when the operation mode is selected.

(3) Temperature range limit setting

After this setting is made, the temperature can be changed within the set range.

- To switch the setting, press the [◴ON/OFF] button Ⓓ.
  ① LIMIT TEMP COOL MODE:
  The temperature range can be changed on cooling/dry mode.
  ② LIMIT TEMP HEAT MODE:
  The temperature range can be changed on heating mode.
  ③ LIMIT TEMP AUTO MODE:
  The temperature range can be changed on automatic mode.
  ④ OFF (initial setting): The temperature range limit is not active.
  * When the setting, other than OFF, is made, the temperature range limit setting on cooling, heating and automatic mode is made at the same time. However, the range cannot be limited when the set temperature range has not changed.
  - To increase or decrease the temperature, press the [TEMP. (▽) or (△)] button Ⓕ.
  - To switch the upper limit setting and the lower limit setting, press the [] button Ⓗ. The selected setting will flash and the temperature can be set.
  - Settable range

Cooling/Dry mode:	Heating mode:	Automatic mode:
Lower limit:19°C ~ 30°C	Lower limit:17°C ~ 28°C	Lower limit:19°C ~ 28°C
Upper limit:30°C ~ 19°C	Upper limit:28°C ~ 17°C	Upper limit:28°C ~ 19°C

OPTIONAL PARTS

[4]–3. Mode selection setting

(1) Remote controller main/sub setting

- To switch the setting, press the [◴ON/OFF] button Ⓓ.
  ① Main : The controller will be the main controller.
  ② Sub : The controller will be the sub controller.

(2) Use of clock setting

- To switch the setting, press the [◴ON/OFF] button Ⓓ.
  ① ON : The clock function can be used.
  ② OFF : The clock function cannot be used.

(3) Timer function setting

- To switch the setting, press the [◴ON/OFF] button Ⓓ (Choose one of the followings.).
  ① WEEKLY TIMER (initial setting value):
  The weekly timer can be used.
  ② AUTO OFF TIMER:
  The auto off timer can be used.
  ③ SIMPLE TIMER:
  The simple timer can be used.
  ④ TIMER MODE OFF:
  The timer mode cannot be used.

* When the use of clock setting is OFF, the “WEEKLY TIMER” cannot be used.

(4) Contact number setting for error situation

- To switch the setting, press the [◴ON/OFF] button Ⓓ.
  ① CALL OFF:
  The set contact numbers are not displayed in case of error.
  ② CALL **** *** ****:
  The set contact numbers are displayed in case of error.
  CALL_:
  The contact number can be set when the display is as shown on the left.
- Setting the contact numbers
  To set the contact numbers, follow the following procedures.
  Move the flashing cursor to set numbers. Press the [🌡TEMP. (▽) and (△)] button Ⓕ to move the cursor to the right (left). Press the [◴CLOCK (▽) and (△)] button Ⓒ to set the numbers.

[4]–4. Display change setting

(1) Temperature display °C/°F setting

- To switch the setting, press the [◴ON/OFF] button Ⓓ.
  ① °C : The temperature unit °C is used.
  ② °F : The temperature unit °F is used.

(2) Suction air temperature display setting

- To switch the setting, press the [◴ON/OFF] button Ⓓ.
  ① ON : The suction air temperature is displayed.
  ② OFF : The suction air temperature is not displayed.

(3) Automatic cooling/heating display setting

- To switch the setting, press the [◴ON/OFF] button Ⓓ.
  ① ON:
  One of “Automatic cooling” and “Automatic heating” is displayed under the automatic mode is running.
  ② OFF:
  Only “Automatic” is displayed under the automatic mode.

[Dot display table]

Selecting language		English	Germany	Spanish	Russian	Italy	Chinese	French	Japanese
Waiting for start-up		PLEASE WAIT	←	←	←	←	←	←	←
Operation mode	Cool	COOL	Kühlen	FRÍO	Холод	COOL	制冷	FROID	冷房
	Dry	DRY	Trocknen	DESHUMI-DIFICACIÓN	Сушка	DRY	除湿	DESHU	ドライ
	Heat	HEAT	Heizen	CALOR	Тепло	HEAT	制热	CHAUD	暖房
	Auto	AUTO	AUTO	AUTO-MÁTICO	Авто	AUTO	自动	AUTO	自動
	Auto(Cool)	COOL	Kühlen	FRÍO	Холод	COOL	制冷	FROID	冷房
	Auto(Heat)	HEAT	Heizen	CALOR	Тепло	HEAT	制热	CHAUD	暖房
	Fan	FAN	Lüfter	VENTI-LACIÓN	Вент	VENTI-LAZIONE	送风	VENTI-LATION	送風
	Ventilation	VENTI-LATION	Gebläse-betrieb	VENTI-LACIÓN	Венти-ляция	ARIA ESTERNA	换气	VENTI-LATION	換気
	Stand by (Hot adjust)	STAND BY	STAND BY	CALENTANDO	Обогрев: пауза	STAND BY	准备中	PRE CHAUFFAGE	準備中
	Defrost	DEFROST	Abtauen	DESCONGE-LACIÓN	Оттаивание	SBRINA MENTO	除霜中	DEGIVRAGE	霜取中
Set temperature		SET TEMP	TEMP einstellen	TEMP. CONSIGNA	Целевая температура	IMPOSTAZIONE TEMPERTURA	设定温度	REGLAGE TEMPERATURE	設定温度
Fan speed		FAN SPEED	Lüftergesch windigkeit	VELOCIDAD VENTILADOR	Скорость вентилятора	VELOCITA' VENTILATORE	风速	VITESSE DE VENTILATION	風速
Not use button		NOT AVAILABLE	nicht Verfugbar	NO DISPONIBLE	Не доступно	NON DISPONIBILE	无效按钮	NON DISPONIBLE	無効ボタン
Check (Error)		CHECK	Prüfen	COMPROBAR	Проверка	CHECK	检查	CONTROLE	点検
Test run		TEST RUN	Testbetrieb	TEST FUNCIO NAMIENTO	Тестовый запуск	TEST RUN	试运转	TEST	試ウンテン
Self check		SELF CHECK	Selbst-diagnose	AUTO REVISIÓN	Самодиаг-ностика	SELF CHECK	自我诊断	AUTO CONTROLE	自己シンダン
Unit function selection		FUNCTION SELECTION	Funktion auswahl	SELECCIÓN DE FUNCIÓN	Выбор функции	SELEZIONE FUNZIONI	功能选择	SELECTION FONCTIONS	キノウ選択
Setting of ventilation		SETTING OF VENTILATION	Lüfterstufen wahlen	CONFIG. VENTILACIÓN	Настройка вентустан.	IMPOSTAZIONE ARIA ESTERNA	换气设定	SELECTION VENTILATION	換気設定

Selecting language	English	Germany	Spanish	Russian	Italy	Chinese	French	Japanese
CHANGE LANGUAGE	CHANGE LANGUAGE	←	←	←	←	←	←	←
Function selection	FUNCTION SELECTION	Funktion auswahlen	SELECCIÓN DE FUNCIONES	Выбор функции	SELEZIONE FUNZIONI	功能限制	SELECTION FONCTIONS	キノウ制限
Operation function limit setting	LOCKING FUNCTION	Sperr-Funktion	FUNCIÓN BLOQUEADA	Функция блокировки	BLOCCO FUNZIONI	操作限制	BLOCAGE FONCTIONS	操作モード
Use of automatic mode setting	SELECT AUTO MODE	Auswahl Auto Betrieb	SELECCIÓN MODO AUTO	Выбор режима АВТО	SELEZIONE MODO AUTO	自动模式	SELECTION DU MODE AUTO	自動モード
Temperature range limit setting	LIMIT TEMP FUNCTION	Limit TEMP Funktion	LÍMIT TEMP CONSIGNA	Ограничение уст. температ	LIMITAZIONE TEMPERATURA	温度限制	LIMITATION TEMPERATURE	温度制限
Limit temperature cooling/day mode	LIMIT TEMP COOL MODE	Limit Kuhl TEMP	LÍMIT TEMP MODO FRIO	Ограничено охлаждение	LIMITAZIONE MODO COOL	制冷范围	LIMITE TEMP MODE FROID	オシボウ冷房
Limit temperature heating mode	LIMIT TEMP HEAT MODE	Limit Heiz TEMP	LÍMIT TEMP MODO CALOR	Ограничен обогрев	LIMITAZIONE MODO HEAT	制热范围	LIMITE TEMP MODE CHAUD	オシボウ暖房
Limit temperature auto mode	LIMIT TEMP AUTO MODE	Limit AUTO TEMP	LÍMIT TEMP MODO AUTO	Ограничен режим АВТО	LIMITAZIONE MODO AUTO	自动范围	LIMITE TEMP MODE AUTO	オシボウ自動
Mode selection	MODE SELECTION	Betriebsart wahlen	SELECCIÓN DE MODO	Выбор режима	SELEZIONE MODO	基本模式	SELECTION DU MODE	基本キノウ
Remote controller setting MAIN	CONTROLLER MAIN	Haupt Controller	CONTROL PRINCIPAL	Основной пульт	CONTROLLO MAIN	遥控 主	TELCOMMANDE MAITRE	リモコン主従
Remote controller setting SUB	CONTROLLER SUB	Neben Controller	CONTROL SECUNDARIO	Дополнитель-ный пульт	CONTROLLO SUB	遥控 辅	TELCOMMANDE ESCLAVE	リモコン主従
Use of clock setting	CLOCK	Uhr	RELOJ	Часы	OROLOGIO	时钟	AFFICHAGE HORLOGE	時計ショウ
Setting the day of the week and time	TIME SET ↵:ENTER	Uhr stellen ↵:einstellen	CONFIG RELOJ ↵:CONFIG	Часы: уст. ↵: ввод	OROLOGIO ↵: ENTER	时间 ↵: ENTER	HORLOGE ↵: ENTRER	トケイセッテイ ↵: カクテイ
Timer set	TIMER SET ↵:ENTER	Zeitschaltuhr ↵:einstellen	TEMPORIZA-DOR↵:CONFIG	Таймер: уст. ↵: ввод	TIMER ↵: ENTER	定时器 ↵: ENTER	PROG HORAIRE ↵: ENTRER	タイマーセッテイ ↵: カクテイ
Timer monitor	TIMER MONITOR	Uhrzeit Anzeige	VISUALIZAR TEMPORIZAD.	Просмотр таймера	VISUALIZ TIMER	定时器状态	AFFICHAGE PROG HORAIRE	タイマーモニター
Weekly timer	WEEKLY TIMER	Wochenzeit Schalt Uhr	TEMPORIZA-DOR SEMANAL	Недельный таймер	TIMER SETTIMANALE	每周定时器	PROG HEBDO MADAIRE	タイマー週間
Timer mode off	TIMER MODE OFF	Zeitschaltuhr AUS	TEMPORIZA-DOR APAGADO	Таймер выкл.	TIMER OFF	定时器无效	PROG HORAIRE INACTIF	タイマー無効
Auto off timer	AUTO OFF TIMER	Auto Zeit funktion AUS	APAGADO AUTOMÁTICO	Автоотключ. по таймеру	AUTO OFF TIMER	解除定时	PROG HORAIRE ARRET AUTO	タイマーケシウスレボウシ
Simple timer	SIMPLE TIMER	Einfache Zeitfunktion	TEMPORIZA-DOR SIMPLE	Простой таймер	TIMER SEMPLIFICATO	简易定时器	PROG HORAIRE SIMPLIFIE	タイマーカンイ
Contact number setting of error situation	CALL	←	←	←	←	←	←	←
Display change	DISP MODE SETTING	Anzeige Betriebsart	MOSTRAR MODO	Настройка инд. режима	IMPOSTAZIONE MODO DISPLAY	转换表示	AFFICHAGE SOUS MENU	表示切替
Temperature display °C/°F setting	TEMP MODE °C/°F	Wechsel °C/°F	TEMP.GRADOS °C/°F	Един. темпер. °C/°F	TEMPERATURA °C/°F	温度 °C/°F	TEMPERATURE °C/°F	温度 °C/°F
Room air temperature display setting	ROOM TEMP DISP SELECT	Raum TEMP gewahlt	MOSTRAR TEMP.	Показывать темп. в комн.	TEMPERATURA AMBIENTE	吸入温度	TEMPERATURE AMBIANTE	スイコミオンド ヒョウジ
Automatic cooling/heating display setting	AUTO MODE DISP C/H	Auto Betrieb C/H	MOSTRAR F/C EN AUTO	Инд. T/X в режиме АВТО	AUTO C/H	自动表示	AFFICHAGE AUTO F/C	自動ヒョウジ

OPTIONAL PARTS

7 Check

① Turn on the power.

② Press the [CHECK] button twice.

③ Set refrigerant address with [TEMP] button if system control is used.

④ Press the [ON/OFF] button to stop the self-check.

Ⓐ CHECK button
Ⓑ Refrigerant address
Ⓒ TEMP. button
Ⓓ IC: Indoor unit
OC: Outdoor unit
Ⓔ Check code
Ⓕ Unit address

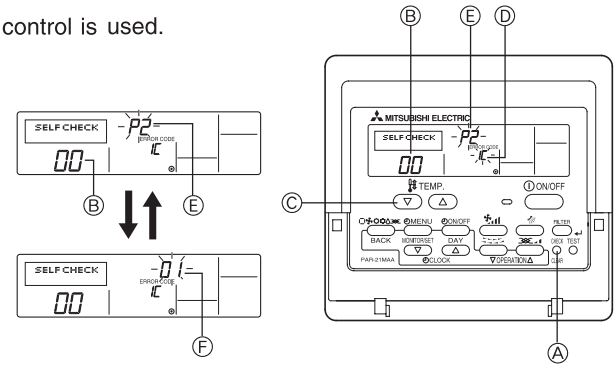

Errors detected by indoor unit

Wired remote controller Check code	Symptom	Remark
P1	Intake sensor error	
P2, P9	Pipe (Liquid or 2-phase pipe) sensor error	
E6, E7	Indoor/outdoor unit communication error	
P4	Drain sensor error	
P5	Drain pump error	
P6	Freezing/Overheating safeguard operation	
EE	Communication error between indoor and outdoor units	
P8	Pipe temperature error	
E4, E5	Remote controller signal receiving error	
Fb	Indoor unit control system error (memory error, etc.)	
– –	No corresponding	
E0, E3	Remote controller transmission error	
E1, E2	Remote controller control board error	

Errors detected by unit other than indoor unit (outdoor unit, etc.)

Wired remote controller Check code	Symptom	Remark
E9	Indoor/outdoor unit communication error (Transmitting error) (Outdoor unit)	For details, check the LED display of the outdoor controller board.
UP	Compressor overcurrent interruption	
U3, U4	Open/short of outdoor unit thermistors	
UF	Compressor overcurrent interruption (When compressor locked)	
U2	Abnormal high discharging temperature/49C worked/insufficient refrigerant	
U1, Ud	Abnormal high pressure (63H worked)/Overheating safeguard operation	
U5	Abnormal temperature of heat sink	
U8	Outdoor unit fan safeguard stop	
U6	Compressor overcurrent interruption/Abnormal of power module	
U7	Abnormality of super heat due to low discharge temperature	
U9, UH	Abnormality such as overvoltage or voltage shortage and abnormal synchronous signal to main circuit/Current sensor error	
Others	Other errors (Refer to the technical manual for the outdoor unit.)	

- On wired remote controller
  Check code displayed in the LCD.

Signal sender

PAR-SL97A-E

Photo

Descriptions

Wireless remote controller for P series and SEZ models.
(The receiver is necessary.)

Applicable Models

- SEZ-KD VA
- PEA-RP200/250GA

Specifications

Accessory	"AAA" LR03 alkaline batteries: 2pcs
	4.1×16 wood screw:2

Dimensions

Unit : mm

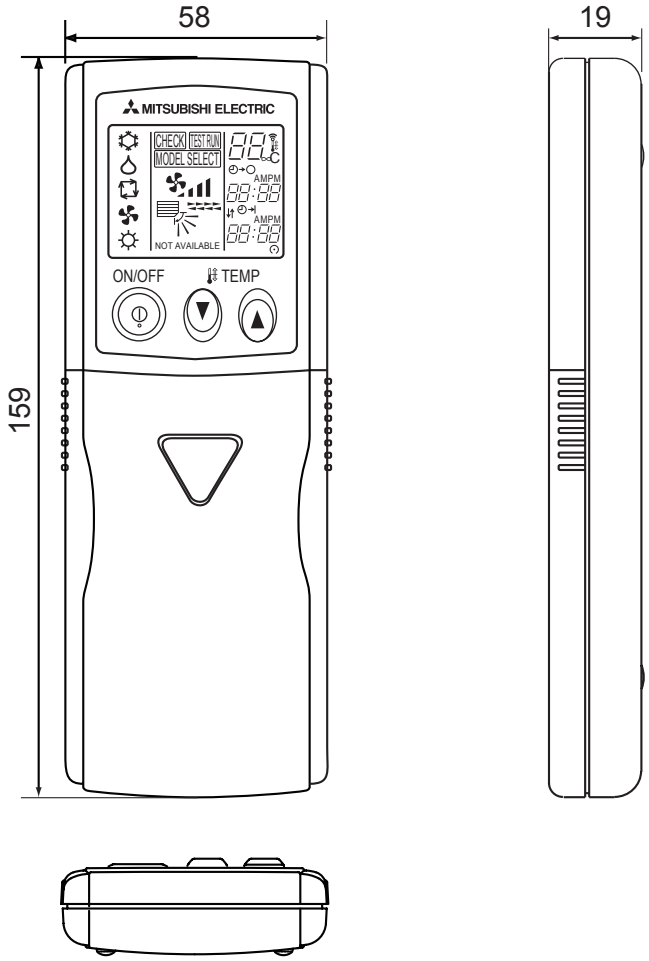

OPTIONAL PARTS

Figure

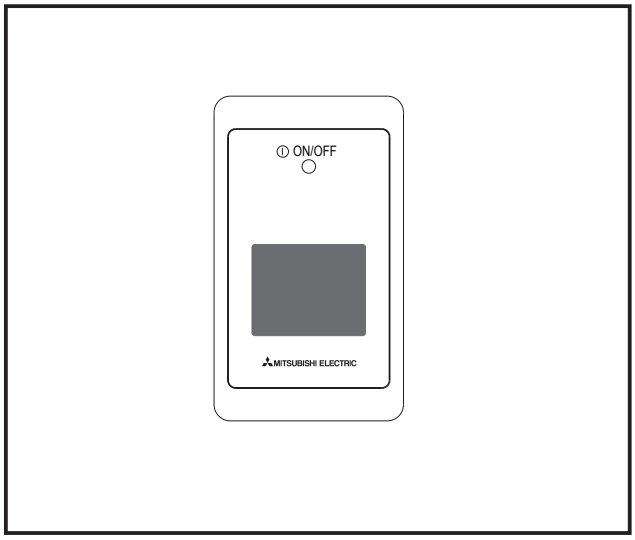

Descriptions

Enables the use of wireless remote controller.

Applicable Models

- SEZ-KD VA
- PEA-RP200/250GA

Specifications

Item	Content
external dimensions	120(H)×70(W)×22.5(D) mm
Weight	0.2kg
Power	DC12V (supplied from indoor unit control)
Tempreture	0 ～ 40℃ Humidity : 30 ～ 90%RH (no condensing)
Material	ABS
Colour (Munsell)	White Grey (4.8Y7.92/0.66)

Dimensions

Unit : mm

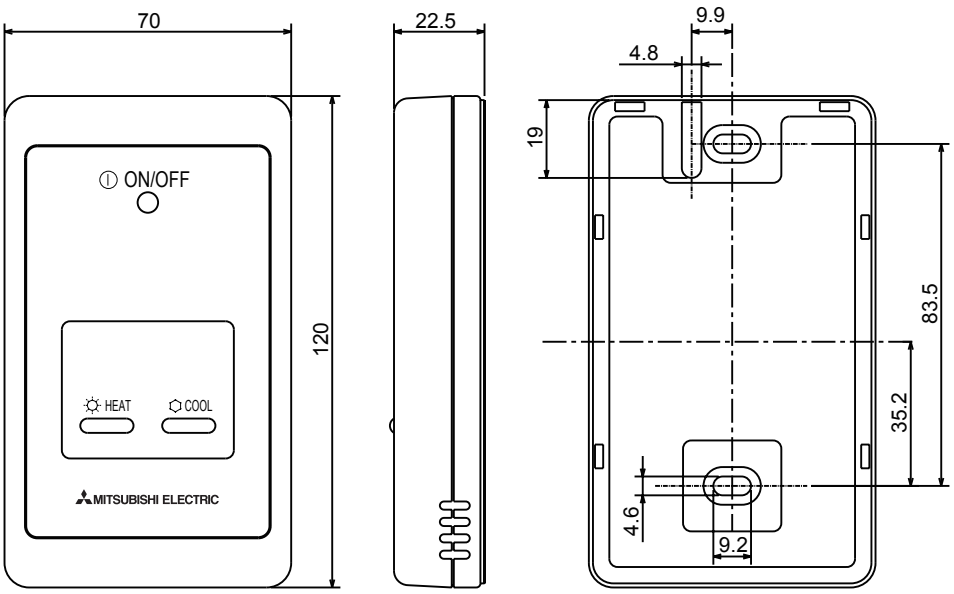

OPTIONAL PARTS

How to Use / How to Install

[Fig. 8-7]

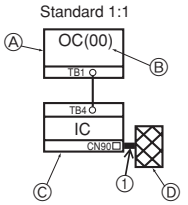

Indoor/outdoor wiring
Signal receiving unit wiring

Ⓐ Outdoor unit
Ⓑ Refrigerant address
Ⓒ Indoor unit
Ⓓ Signal receiving unit

[Fig. 8-8]

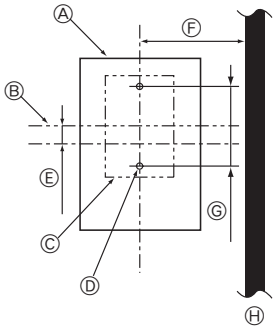

Ⓐ Signal receiving unit external
Ⓑ Center of Switch box
Ⓒ Switch box
Ⓓ Installation pitch
Ⓔ 6.5 mm (1/4 inch)
Ⓕ 70 mm (2 - 3/4 inch)
Ⓖ 83.5 ± 0.4 mm (3 - 9/32 inch)
Ⓗ Protrusion (pillar, etc)

[Fig. 8-9]

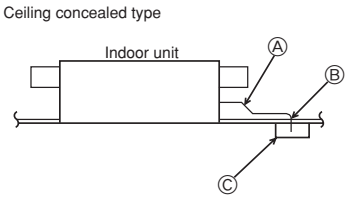

Ⓐ Remote controller wire
Ⓑ Hole (drill a hole on the ceiling to pass the remote controller wire.)
Ⓒ Signal Receiving Unit

[Fig. 8-10]

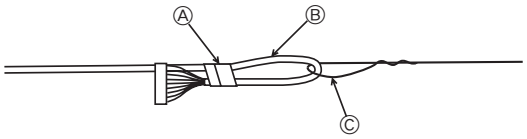

Ⓐ Fix tightly with tape.
Ⓑ Remote controller wire
Ⓒ Order wire

[Fig. 8-11]

When using the switch box

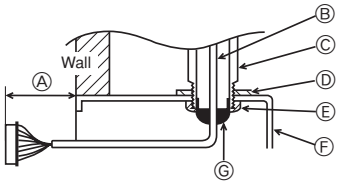

When installing directly on the wall

Ⓐ 150 mm (5 - 15/16 inch)
Ⓑ Remote controller wire (Accessory)
Ⓒ Wiring pipe
Ⓓ Locknut
Ⓔ Bushing
Ⓕ Switch box
Ⓖ Seal around here with putty
Ⓗ Seal around here with putty
Ⓘ Remote controller wire
Ⓙ Seal around here with putty

[Fig. 8-12]

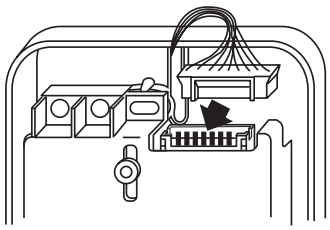

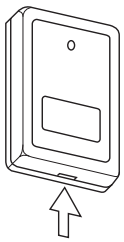

Insert the minus screwdriver toward the arrow pointed and wrench it to remove the cover.
A flat screwdriver whose width of blade is between 4 and 7mm (5/32 - 9/32inch) must be used.

[Fig. 8-13]

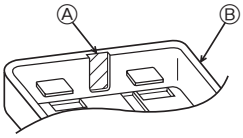

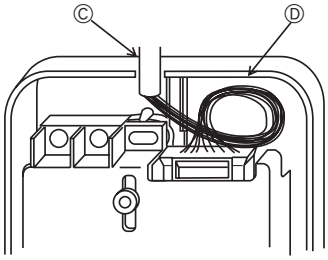

Ⓐ Thin-wall portion
Ⓑ Bottom case
Ⓒ Remote controller wire
Ⓓ Conducting wire

[Fig. 8-14]

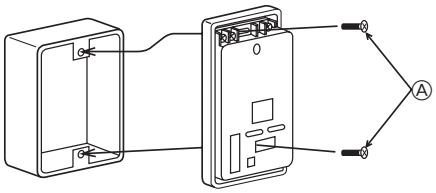

Ⓐ Screw (M4 x 30)
* When installing the lower case directly on the wall or the ceiling, use wood screws.

[Fig. 8-15]

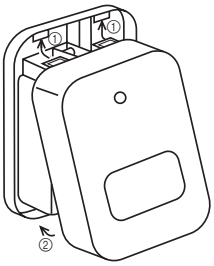

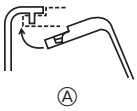

① Hang the cover to the upper hooks (2 places).
② Mount the cover to the lower case
Ⓐ Cross-section of upper hooks

Signal Receiving Unit

1) Sample system connection
[Fig. 8-7]

Only the wiring from the signal receiving unit and between the remote controllers is shown in [Fig. 8-7]. The wiring differs depending on the unit to be connected or the system to be used.
For details on restrictions, refer to the installation manual or the service handbook that came with the unit.

1. Connecting to Mr. SLIM air conditioner

(1) Standard 1:1

① Connecting the signal receiving unit
Connect the signal receiving unit to the CN90 (Connect to the wireless remote controller board) on the indoor unit using the supplied remote controller wire. Connect the signal receiving units to all the indoor units.

2) How To Install
[Fig. 8-8] to [Fig. 8-15]

1. Common items for "Installation on the ceiling" and "Installation on the switch box or on the wall"

[Fig. 8-8]

Ⓐ Signal receiving unit external
Ⓑ Center of Switch box
Ⓒ Switch box
Ⓓ Installation pitch
Ⓔ 6.5 mm (1/4 inch)
Ⓕ 70 mm (2 - 3/4 inch)
Ⓖ 83.5 ± 0.4 mm (3 - 9/32 inch)
Ⓗ Protrusion (pillar, etc)

[Fig. 8-9]

Ⓐ Remote controller wire
Ⓑ Hole (drill a hole on the ceiling to pass the remote controller wire.)
Ⓒ Signal Receiving Unit

(1) Select the installation site.

The following must be observed.

① Connect the signal receiving unit to the indoor unit with the supplied remote controller wire. Note that the length of the remote controller wire is 5 m (16 ft). Install the remote controller within the reach of the remote controller wire.
② When installing on either the switch box or the wall, allow space around the Signal Receiving Unit as shown in the figure in [Fig. 8-8].
③ When installing the Signal Receiving Unit to the switch box, the Signal Receiving Unit slipped downward for 6.5 mm (1/4 inch) as right illustrated.
④ Parts which must be supplied on site.
Switch box for one unit
Thin-copper wiring pipe
Lock nut and bushing
⑤ The thickness of the ceiling to which the remote controller is installed must be between 9 mm (3/8 inch) and 25 mm (1 inch).
⑥ Install the unit on the ceiling or on the wall where the signal can be received from the wireless remote controller.
The area where the signal from the wireless remote controller can be received is 45 ° and 7 m (22 ft) away from the front of the signal receiving unit.
⑦ Install the signal receiving unit to the position depending on the indoor unit model.
⑧ Connect the remote controller wire securely to the order wire. To pass the remote controller wire through the conduit, follow the procedure as shown in [Fig. 8-10].

[Fig. 8-10]

Ⓐ Fix tightly with tape.
Ⓑ Remote controller wire
Ⓒ Order wire

Note:

- **The point where the remote controller wire is connected differs depending on the indoor unit model.**
  Take into account that the remote controller wire cannot be extended when selecting the installation site.
- **If the Signal Receiving Unit is installed near a fluorescent lamp specially inverter type,signal interception may occur.**
  Be careful for installing the Signal Receiving Unit or replacing the lamp.

(2) Use the remote controller wire to connect it to the connector (CN90) on the controller circuit board on the indoor unit.

Refer to the 2) Setting the Pair Number Switch for details on controller circuit board on the indoor unit.

(3) Seal the Signal Receiving Unit cord lead-in hole with putty in order to prevent the possible entry of dew, water droplets, cockroaches, other insects, etc.

[Fig. 8-11]

Ⓐ 150 mm (5 - 15/16 inch)
Ⓑ Remote controller wire (Accessory)
Ⓒ Wiring pipe
Ⓓ Locknut
Ⓔ Bushing
Ⓕ Switch box
Ⓖ Seal around here with putty

- When installing on the switch box, seal the connections between the switch box and wiring pipe with putty.

[Fig. 8-11]

Ⓗ Seal around here with putty
Ⓘ Remote controller wire
Ⓙ Seal around here with putty

- When opening a hole using a drill for Signal Receiving Unit wire (or taking the wire out of the back of the Signal Receiving Unit), seal that hole with putty.
- When routing the wire via the portion cut off from the upper case, equally seal that portion with putty.

(4) Install the remote control wire to the terminal block. [Fig. 8-12]

(5) Installing hole when the Signal Receiving Unit is installed on the wall direct. [Fig. 8-13]

- Cut the thin-wall portion inside the bottom case (oblique section) by a knife or a nipper.
- Take out the connected remote controller wire to the terminal brock through this space.

(6) Install the lower case on the switch box or directly on the wall. [Fig. 8-14]
Mounting the cover [Fig. 8-15]

⚠ **Caution:**

- **Insert the cover securely until the clicking sound is made. If not doing so, the cover may fall.**

■ Emergency Operation for Wireless Remote-controller

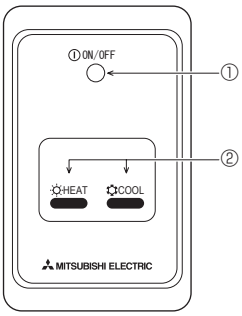

① **ON/OFF lamp** (lit when unit is operating; unlit when unit is not operating)
② **Emergency operation**
In cases where the remote control unit does not operate properly, use either the COOL or HEAT button on the wireless remote control signal receiver to toggle the unit on or off. On cooler only units, pushingthe HEAT button toggles the fan on and off.

Pressing the COOL or HEAT button selects the following settings.

Operation mode	COOL	HEAT
Preset temperature	24 °C/75 °F	24 °C/75 °F
Fan speed	High	High

OPTIONAL PARTS

Signal Reciever

PAR-SA9FA-E

Photo

Descriptions

- Integrate the signal reciever in the corner panel (the opposite side of refrigerant piping).
- Applicable only for PLA-BA,BA2,BA3 models.

Applicable Models

■ PLA-RP BA/BA2/BA3

Specifications

Model name	PAR-SA9FA-E
Operation indicator lamp	During operation: LED (green) lights, Abnormal condition: LED (green) blinks, Preparing for heating operation:LED.(orange) lights
Emergency operation	Cooling/heating switch (operate/stop) equipped.
Number of controllable units	Maximum 16 refrigerant systems in one group (At least one wireless signal receiving kit must be installed to each refrigerant system.)
Adapter wiring	Connect the 9-core cord with connector (attached) to CN90 of the indoor controller board of the indoor unit.
Signal distance	Within 7m in 45 degrees range from the front of the signal receiver

Dimensions

Unit : mm

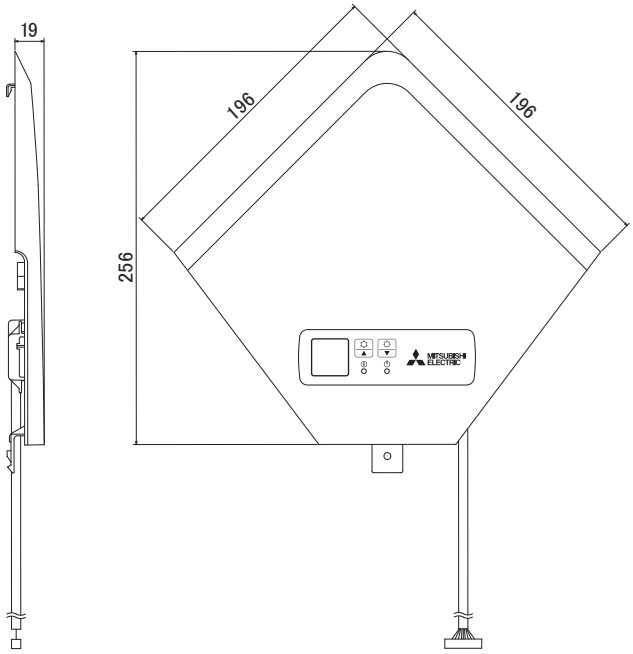

OPTIONAL PARTS

How to Use / How to Install

1 Before installation

※Turn off the main power before work.

- Open the intake grill and remove the corner panel where refrigerant pipes are and where local wires are drawn into.
  ※The corner panel removed is not needed.
  ※When attaching the duct flange during installation of decoration panel, perform the following work only after connecting the wires to the decoration panei:
- The control box cover fixed by 3 screws,which is possible to hang temporarily.
- Perform setting to designate the uint to be operated by the wireless remote control.
  Set J41 and J42 (jumper wires) on the indoor controller board and pair number switch of the wireless remote control asfollows:

■Setting pair number

- Up to 4 patterns of pair number can be set.
  Match the pair number (setting of J41 and J42) of the indoor controller board and the pair number switch of wireless remote control as shown in the table below.
  ※See the installation manual provided with the wireless remote control for details on setting method of the wireless remote control.

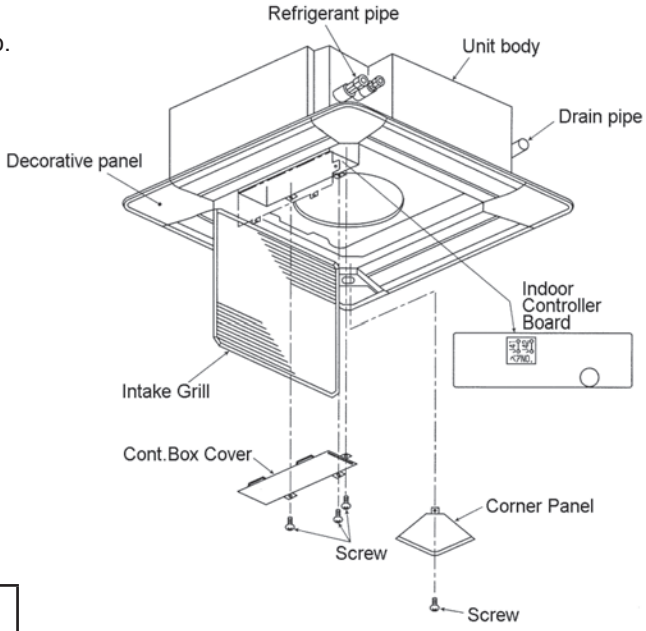

Setting Pattern.	Pair number of wireless remote controller.	Cut point of Jumper wires on the indoor controller board.
A	0	Don't cut the jumper wire
B	1	Cut the jumper wire "J41"
C	2	Cut the jumper wire "J42"
D	One of procedures 3-9	Cut the jumper wire both "J41" and "J42"

2 Installation of signal receiving unit.

- Pull out the cable of infrared receiver from the square hole in the corner of decoration panel, the portion of corner panel that was removed in step 1.
- Pass the cable through the three hooking portions of unit and electrical parts box as shown in the flgure, adjust the length of cable so that the
- Slide the receiving unit in the ① direction as shown and fix it by the screw which is used for the corner panel removed.

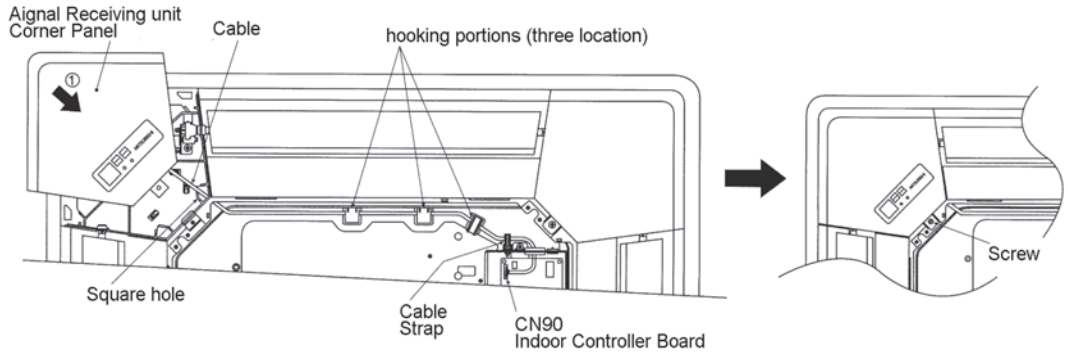

- After the installation completed, set the cont,box cover as they were.

OPTIONAL PARTS

Wireless Remote Controller Kit for Ceiling Suspended models PAR-SL94B-E

Photo

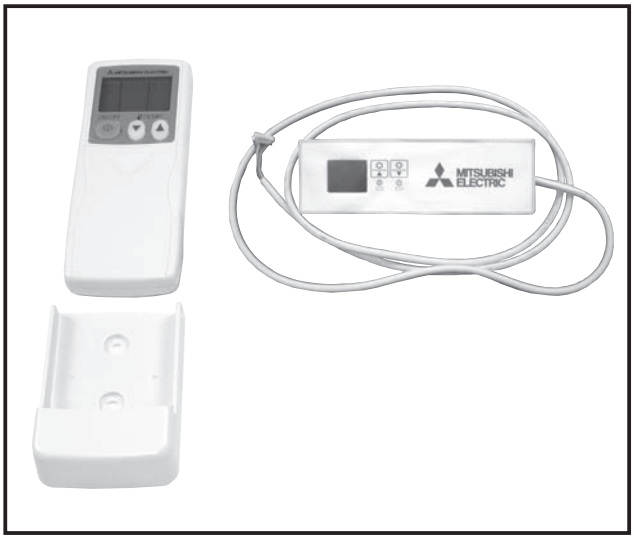

Descriptions

Enables the use of wireless remote controller for ceiling suspended models.

Applicable Models

■ PCA-RP KA

Specifications

Operation indication	During operation: LED (green) is lit, Alarm: LED (green) flashes.
Emergency operation	Cooler/heater button (start/stop) is provided.
Number of units controlled	Max. 16 refrigerant systems per group (One or more wireless light receivers must be installed for each refrigerant system.)
Adapter wiring	9-wire cord (standard accessory) with connector is connected to the connector (CN90) on the indoor unit control board.
Light receiver range	7m or less, at within 45 degrees to the front of receiver (the range varies with conditions)
Operating conditions	Temperature: 0 to 40℃ , Humidity: 30 to 90% (no condensation)
Exterior	White gray (Munsell 4.48Y 7.92/0.66), ABS resin
Installation method	Attached to the brand label case of indoor unit.

Dimensions

Unit : mm

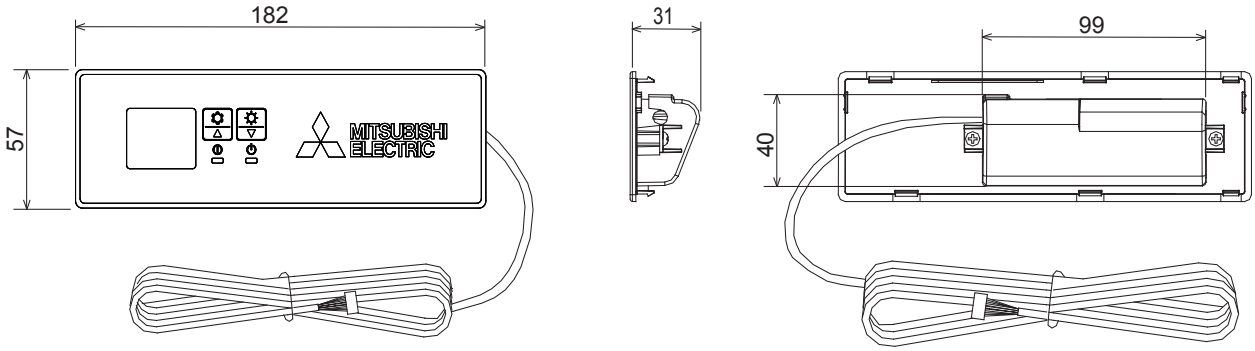

OPTIONAL PARTS

How to Use / How to Install

1 Making Sure of Components

Make sure that the following components, along with this manual, are packed in the box.

Component	Q'ty
Wireless remote controller reciever	1
Wireless remote controller	1
Remote control holder	1
"AAA" LR03 alkaline batteries	2
4.1×16 wood screws	2
Cord retaining clips	2
Connection cord fixing seal (12×30 size)	1

2 How to Install

※ Be sure to turn the power off before installing.

① Removing the intake grille and the right side panel

- Slide the catch holding the intake grille backwards to open the grille. Remove the screw holding the side panel, and then slide the side panel forward to remove it.

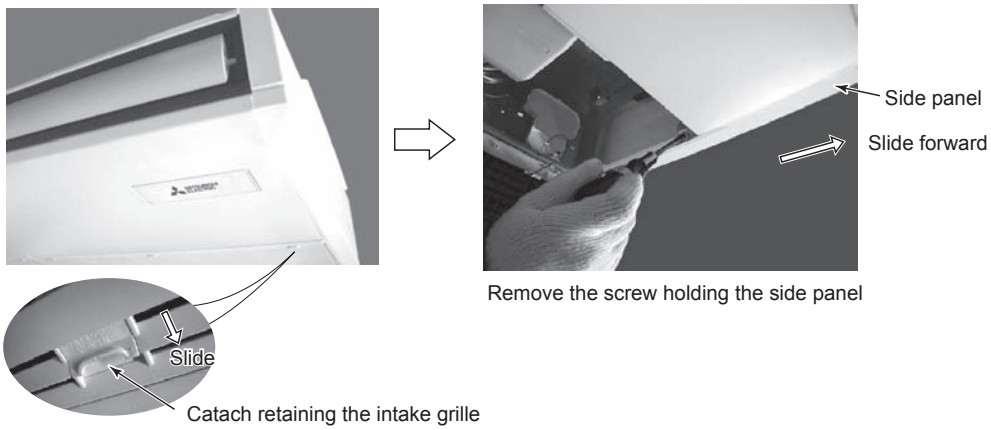

② Removing the existing brand label case

- Remove the brand label case (name plate with MITSUBISHI ELECTRIC) from the bottom right of the unit. If it is difficult to remove the case, use a flat-blade screwdriver, etc., taking care not to damage the panel.

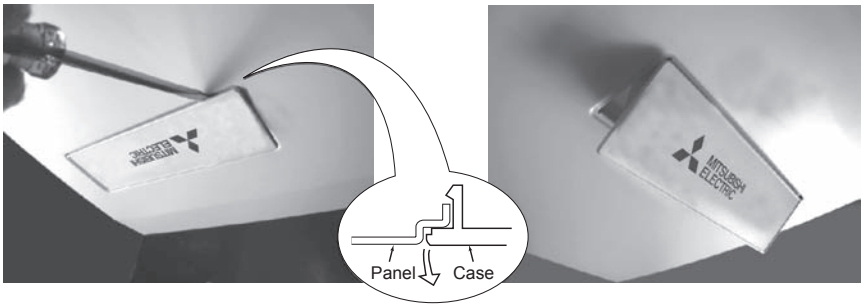

③ Installing to the indoor unit

- Pass the receiver board connector through the right side of the square hole to which the brand label case was attached and then pull the connector and cord thruogh the slit in the right side of the bottom panel.
- Fit the receiver into the square hole where the brand label case was attached.

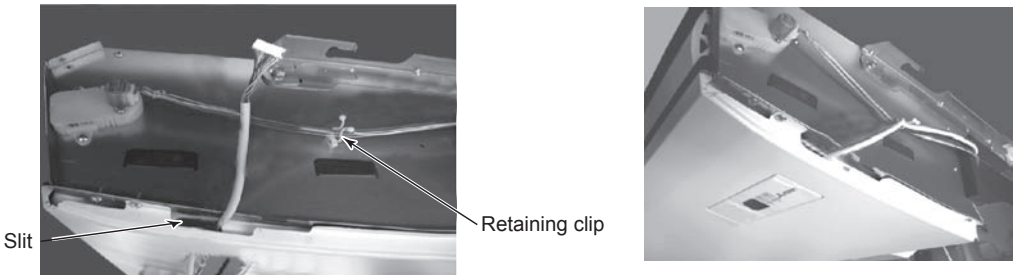

④ Laying out the lead wire

- Pass the lead wire for receiver through the retaining clips.
- Fix the lead wire for receiver with the clips on the ceiling side of the unit.

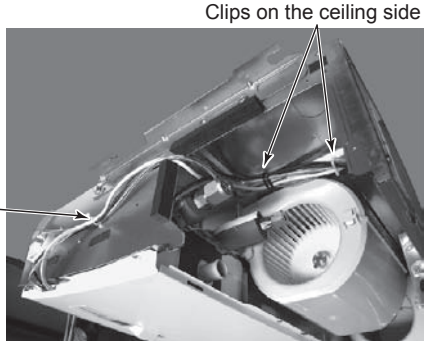

⑤ Removing the beam and the electrical box cover

- Remove the beam.
- Loosen the two screws at the bottom of the electrical box cover, and then slide the cover to the left to remove it.
- Pull down the electrical box.

Also on the opposite side { Electrical box fixing screw / Electrical box cover fixing screw

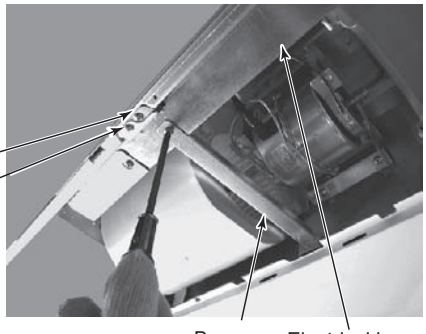

⑥ Connecting the receiver board connector to the control circuit board

- Pass the cord through the bush at the top right of the electrical box.
- Connect the connector to CN90 on the right of the control board.
- If the cord is loose, bundle it using the clamps under the above bush.

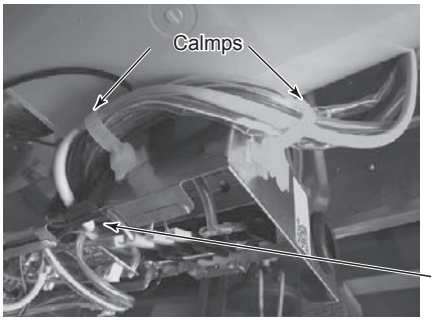

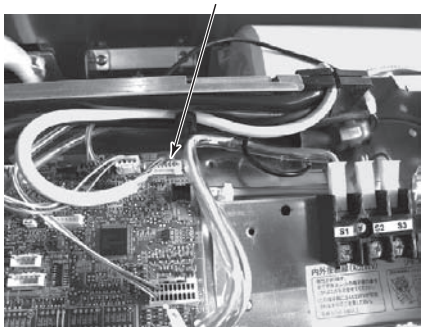

* The positions of the connectors may be different according to the model. Please refer to the wiring diagram to confirm the positions of the connectors.

⑦ Reinstalling the removed components

- Reinstall the removed components in reverse order. (The brand lavel case is not needed.)

⑧ Remote control holder

- To install the wireless remote controller on a wall, first attach the remote control holder to a wall.

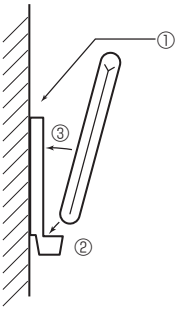

Fitting remote control into holder

① Fix the remote control holder to the wall using the 2 wood screws provided.
② Insert the remote control into the holder.
③ Push the remote control against the wall.

Removing remote control

- Pull the top of remote control forward.

NOTE : The remote signal will reach the receiver over a distance of approx. 7m in a straight line and approx. 45° left or right. If the infrared receiver is affected by fluorescent light (especially, inverter type), it may not be able to receive the signal. Take this into consideration when installing fluorescent lights or replacing them.

3 Pair Number Setting

- This is the setting to specify the unit to operate with the wireless remote controller.
- Make setting for J41, J42 (Jumper wire) of indoor controller board and the pair number of wireless remote cotroller.
- The pair number setting is available with the 4 patterns as shown in the following table. Make setting for the pair number (J41, J42) of indoor controller board and the pair number of wireless remote controller which is used as shown in the following table. *The initial setting is Pair No. “0”.

① Press the SET button with something sharp at the end.
Start this operation from the status of remote controller display turned off.
MODEL SELECT blinks and Model No. is lighted.
② Press the min button twice continuously. Pair No. “0” blinks.
③ Press the temp ▼ ▲ button to set the pair number you want to set.
④ Press the SET button with something sharp at the end.
Set pair number is lighted for 3 seconds then turned off.

Ⓐ Pair No. of wireless remote controller	Indoor PC board
0	Initial setting
1	Cut J41
2	Cut J42
3 ~ 9	Cut J41, J42

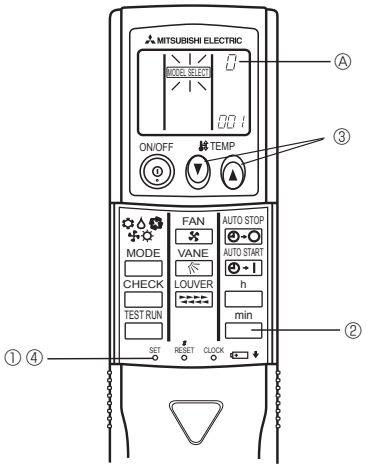

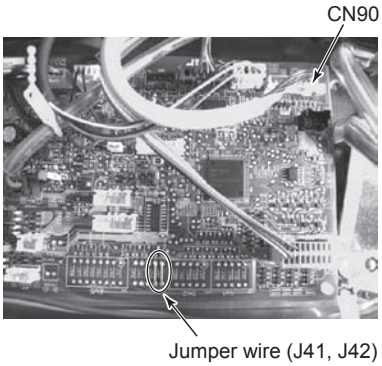

* The positions of the connectors may be different according to the model. Please refer to the wiring diagram to confirm the positions of the connectors.

4 Test Run

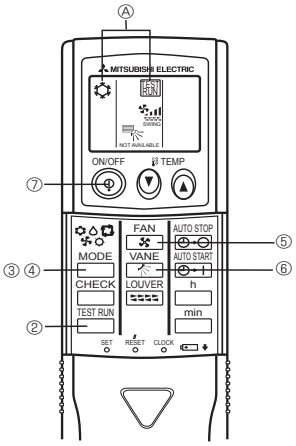

Measure an impedance between the power supply terminal block on the outdoor unit and the ground with a 500V Megger and check that it is equal to or greater than 1.0 MΩ.

① Turn on the main power to the unit.
② Press the TEST RUN button twice continuously.
(Start this operation from the status of remote controller display turned off.)
Ⓐ TEST RUN and current operation mode are displayed.
③ Press the MODE ( ) button to activate COOL mode, then check whether cool air is blown out from the unit.
④ Press the MODE ( ) button to activate HEAT mode, then check whether warm air is blown out from the unit.
⑤ Press the FAN button and check whether strong air is blown out from the unit.
⑥ Press the VANE button and check whether the auto vane operates properly.
⑦ Press the ON/OFF button to stop the test run.

NOTE : • Point the remote controller towards the indoor unit receiver while following steps ② to ⑦.
• It is not possible to run in FAN, DRY or AUTO mode.

OPTIONAL PARTS

5 Function Selection

This setting is available only for Mr. Slim model. CITY MULTI model can be set by dip switch of indoor/outdoor control circuit board. Refer to technical data of CITY MULTI model to set dip switch.

Each function can be set according to necessity using the remote controller.
The setting of function for each unit can only be done by the remote controller.
Select function available from the Table3. Function selection using wireless remote controller is available only for refrigerant system with wireless function. Refrigerant address cannot be specified by the wireless remote controller.
The article below describes how to set “LOSSNAY connectivity” into “supported (indoor unit is not equipped with outdoor-air intake)” in Table 3 as an example.

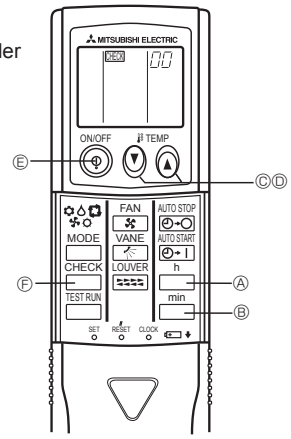

① Go to the function select mode
Press the CHECK button Ⓕ twice continuously.
(Start this operation from the status of remote controller display turned off.)
CHECK is lighted and “00” blinks.
Press the temp button Ⓒ once to set “50”. Direct the wireless remote controller toward the receiver of the indoor unit and press the h button Ⓐ.

② Setting the unit number
Press the temp button Ⓒ and Ⓓ to set the unit number “00”. Direct the wireless remote controller toward the receiver of the indoor unit and press the min button Ⓑ.

③ Selecting a mode
Enter 03 to change the LOSSNAY connectivity setting using the Ⓒ and Ⓓ buttons. Direct the wireless remote controller toward the receiver of the indoor unit and press the h button Ⓐ.
Current setting number: 1=1 beep (1 second)
2=2 beeps (1 second each)
3=3 beeps (1 second each)

※ If a mode number that can not be recognized by the unit is entered, 3 beeps (3 beeps of 0.4 seconds duration)will be heard.
Reenter the mode number selecting.
※ If the signal was not received by the sensor or an error occurred during transmission, you will not hear a beep or a “double beep” may be heard.
Press the h button again.

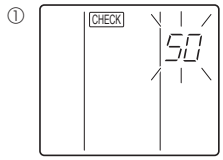

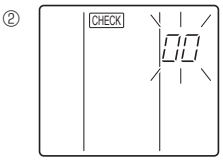

④ Selecting the setting number
Use the Ⓒ and Ⓓ buttons to change the LOSSNAY connectivity setting to 02. Direct the wireless remote controller toward the sensor of the indoor unit and press the h button Ⓐ.
→ At this time, current setting number for selected mode number will be output by the interrupted buzzer sounds and the blinks of operation indicator.
Output : setting number = 1 → beep beep (0.4 second + 0.4 second) ×1
2 → beep beep (0.4 second + 0.4 second) ×2
3 → beep beep (0.4 second + 0.4 second) ×3

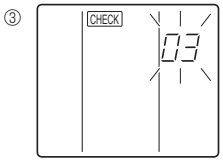

※ If a setting number that can not be recognized by the unit is entered, 3 beeps (3 beeps of 0.4 seconds duration) will be heard (unit will beep only).
Reenter the setting number selecting.
※ If the signal was not received by the sensor or an error occurred during transmission, you will not hear a beep or a “double beep” may be heard.
Press the h button again.
※ If the number that can not be set is input, the former setting number will be set.

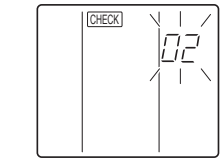

⑤ To select multiple functions continuously
Repeat steps ③ and ④ to change multipul function settings continuously.

⑥ Complete function selection
Direct the wireless remote controller toward the sensor of the indoor unit and press the button Ⓔ.

NOTE : Whenever changes are made to the function settings after construction or maintenance, be sure to record the added functions with an “○”, in the “Check” column provided on the chart.

Other function selections
Now that you know how to change LOSSANY connectivity setting, there are several other settings that can be changed as well.
The following table lists the various settings that can be changed through the remote controller and the default settings.

Table 3.

Function	Settings	PCA-RP·KA
Power failure automatic recovery	Not available	*1
	Available	*1
Indoor temperature detecting	Indoor unit operating average	○
	Set by indoor unit's remote controller	
	Remote controller's internal sensor	
LOSSNAY connectivity	Not supported	○
	Supported (indoor unit is not equipped with outdoor-air intake)	
	Not supported (indoor unit is not equipped with outdoor-air intake)	
Auto mode (only for PUHZ)	Energy saving cycle automitically enabled	○
	Energy saving cycle automitically disabled	
Filter sign	100Hr	
	2500Hr	○
	No filter sign indicator	
Fan speed	Quiet	
	Standard	○
	High ceiling	
Up/down vane setting	No vanes	
	Equipped with vanes (No.1 set)	○
	Equipped with vanes (No.2 set)	

*1 Power failure automatic recovery initial setting depends on the connecting outdoor unit.

Things to remember when entering function selections:
The basic procedure for entering function selections is the same as described for switching between LOSSNAY connectivity. However, there are some differences at step ② for selecting the unit number, step ③ for selecting the mode number and step ④ for selecting the setting number.
The following Tables 4 and 5 list the various function settings, mode numbers and setting numbers.
Table 4 details the function of the entire refrigerant system while Table 5 shows the function that can be set for the indoor unit.

Table 4. Itemized functions of the entire refrigerant system (select unit number 00)

Mode	Settings	Mode no.	Setting no.	Check	Remarks
Power failure automatic recovery	Not available	01	1		
	Available (Approximately 4-minutes wait-period after power is restored.)		2		Approximately 4-minutes wait-period after power is restored.
Indoor temperature detecting	Indoor unit operating average	02	1		
	Set by indoor unit's remote controller		2		
	Remote controller's internal sensor		3		
LOSSNAY connectivity	Not supported	03	1		
	Supported (indoor unit is not equipped with outdoor-air intake)		2		
	Not supported (indoor unit is not equipped with outdoor-air intake)		3		
Auto mode (only for PUHZ)	Energy saving cycle automitically enabled	05	1		
	Energy saving cycle automitically disabled		2		

Table 5. Itemized functions of the indoor unit (select unit numbers 01 to 04 or 07)

Mode	Settings	Mode no.	Setting no.	Check	Remarks
Filter sign	100Hr	07	1		
	2500Hr		2		
	No filter sign indicator		3		
Fan speed	Quiet	08	1		
	standard		2		
	High ceiling		3		
Up/down vane setting	No vanes	11	1		
	Equipped with vaneas (No.1 set)		2		
	Equipped with vaneas (No.2 set)		3		

② Setting the unit numbers
Set "00" as the unit number when setting function from Table 4.
When setting function from Table 5.
- When setting function for an indoor unit in an independent system, set the unit number to 01.
- When setting function for a simultaneous-Twin Triple quadruple indoor unit system, assign unit numbers from 01 to 04 to each indoor unit.
- When setting the same functions for an entire simultaneous Twin Triple quadruple-indoor unit system, assign "07" as the unit number.

③ Selecting the mode number
Select from Table 4 and Table 5.

④ Selecting the setting number.

6 Self-Check

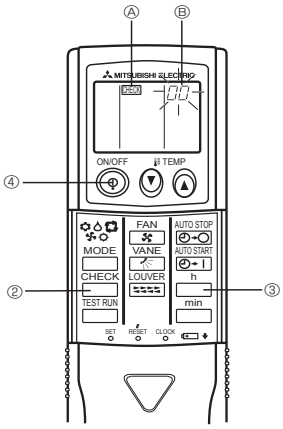

① Turn on the main power to the unit.
② Press the CHECK button twice continuously.
(Start this operation from the status of remote controller display turned off.)
Ⓐ CHECK begins to light.
Ⓑ «00» begins to blink.
③ While pointing the remote controller toward the unit's receiver, press the h button. The check code will be indicated by the number of times that the buzzer sounds from the receiver section and the number of blinks of the operation lamp.
④ Press the ON/OFF button to stop the self-check.

● Refer to the following tables for details on the check codes.

① Output pattern (Mr.Slim model / CITY MULTI model)

[Output pattern A]

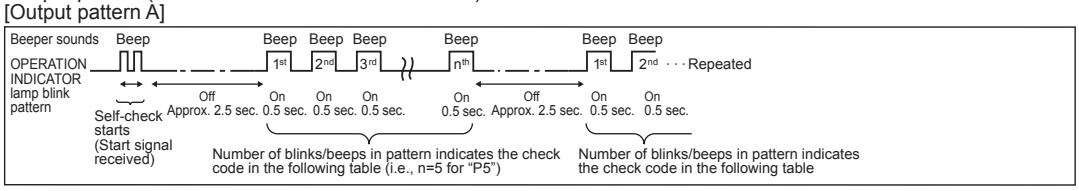

[Output pattern B]

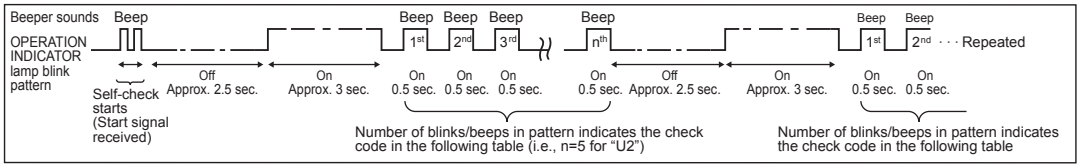

② Check code (Mr.Slim model)

[Output pattern A] Errors detected by indoor unit

Wireless remote controller Beeper sounds/OPERATION INDICATOR lamp blinks (Number of times)	Wired remote controller Check code	Symptom	Remark
1	P1	Intake sensor error	
2	P2, P9	Pipe (Liquid or 2-phase pipe) sensor error	
3	E6,E7	Indoor/outdoor unit communication error	
4	P4	Drain sensor error/Float switch connector open	
5	P5	Drain pump error	
6	P6	Freezing/Overheating safeguard operation	
7	EE	Communication error between indoor and outdoor units	
8	P8	Pipe temperature error	
9	E4	Remote controller signal receiving error	
10	–	–	
11	–	–	
12	Fb	Indoor unit control system error (memory error, etc.)	
No sound	– –	No corresponding	

[Output pattern B] Errors detected by unit other than indoor unit (outdoor unit, etc.)

Wireless remote controller Beeper sounds/OPERATION INDICATOR lamp blinks (Number of times)	Wired remote controller Check code	Symptom	Remark
1	E9	Indoor/outdoor unit communication error (Transmitting error) (Outdoor unit)	For details, check the LED display of the outdoor controller board.
2	UP	Compressor overcurrent interruption	
3	U3,U4	Open/short of outdoor unit thermistors	
4	UF	Compressor overcurrent interruption (When compressor locked)	
5	U2	Abnormal high discharging temperature/ insufficient refrigerant	
6	U1,Ud	Abnormal high pressure (63H worked)/Overheating protection operation	
7	U5	Abnormal temperature of heat sink	
8	U8	Outdoor unit fan protection stop	
9	U6	Compressor overcurrent interruption/Abnormal of power module	
10	U7	Abnormality of super heat due to low discharge temperature	
11	U9,UH	Abnormality such as overvoltage or voltage shortage and abnormal synchronous signal to main circuit/Current sensor error	
12	–	–	
13	–	–	
14	Others	Other errors (Refer to the technical manual for the outdoor unit.)	

*1 If the beeper does not sound again after the initial 2 beeps to confirm the self-check start signal was received and the OPERATION INDICATOR lamp does not come on, there are no error records.
*2 If the beeper sounds 3 times continuously “beep, beep, beep (0.4 + 0.4 + 0.4 sec.)” after the initial 2 beeps to confirm the self-check start signal was received, the specified refrigerant address is incorrect.
- On wireless remote controller
  The continuous buzzer sounds from receiving section of indoor unit.
  Blink of operation lamp
- On wired remote controller
  Check code display in the LCD.

③ Check code (CITY MULTI model)
[Output pattern A] Errors detected by indoor unit or LOSSNAY unit
[Output pattern B] Errors detected by unit other than indoor unit (outdoor unit, etc.)

Wireless remote controller Beeper sounds/OPERATION INDICATOR lamp blinks (Number of times)	Wired remote controller Check code	Remark
1	1000 ~ 1999	
2	2000 ~ 2999	
3	3000 ~ 3999	
4	4000 ~ 4999	
5	5000 ~ 5999	
6	6000 ~ 6999	
7	7000 ~ 7999	
8	0000 ~ 0999	
9	8000 over	

*1 Refer to service handbook of outdoor unit for the detail.
*2 If the beeper does not sound again after the initial 2 beeps to confirm the self-check start signal was received and the OPERATION INDICATOR lamp does not come on, there are no error records.
*3 If the beeper sounds 3 times continuously “beep, beep, beep (0.4 + 0.4 + 0.4 sec.)” after the initial 2 beeps to confirm the self-check start signal was received, the specified address is incorrect.
- On wireless remote controller
  The continuous buzzer sounds from receiving section of indoor unit.
  Blink of operation lamp
- On wired remote controller
  Check code display in the LCD.

Contraller Holder for Wireless remote controller **MAC-1200RC**

Photo

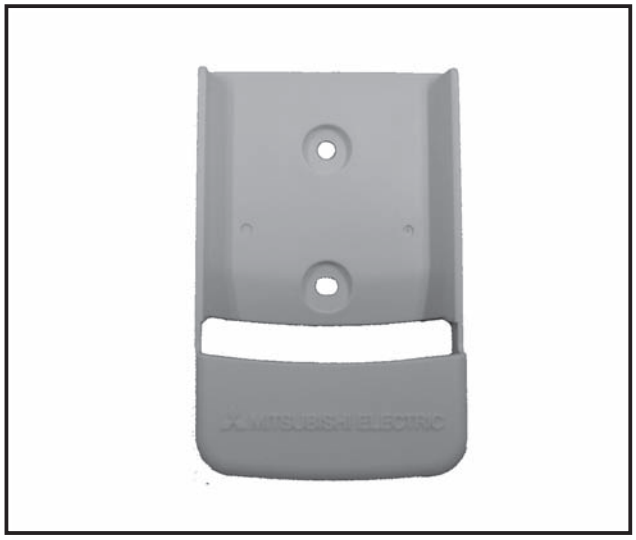

Descriptions

- Please use it for the prevention of leaving behind of wireless remoto controller.
- Please use this item when you put remote controller on the wall etc.

Applicable Models

■ MSZ-HC25VA
■ MSZ-HC35VA(B)

Specifications

Material	Polystyrene
Color	White

Dimensions

Unit : mm

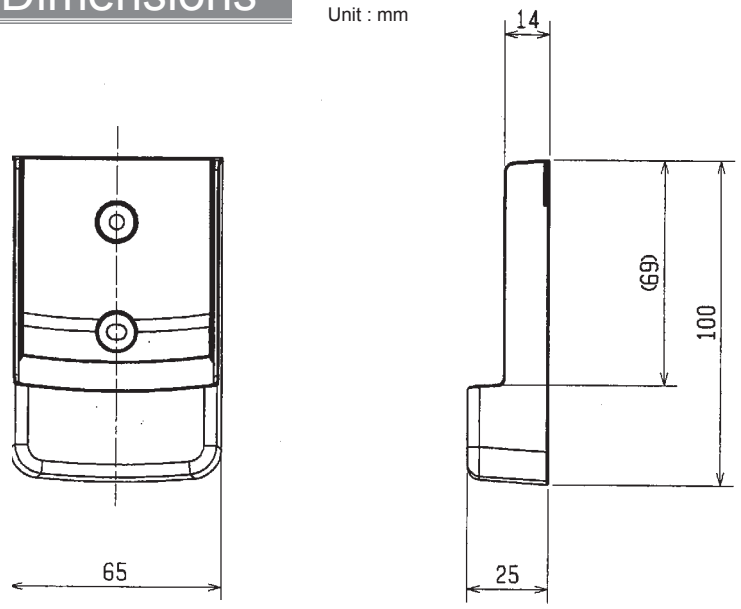

How to Use / How to Install

Installation area

1) Installation area
- Area in which the remote controller is not exposed to direct sunshine.
- Area in which there is no nearby heating source.
- Area in which the remote controller is not exposed to cold (or hot) winds.
- Area in which the remote controller can be operated easily.
- Area in which the remote controller is beyond the reach of children.

2) Installation method

① Attach the remote controller holder to the desired location using two tapping screws.
② Place the lower end of the controller into the holder.

Ⓐ Remote controller
Ⓑ Wall
Ⓒ Display panel
Ⓓ Receiver

- The signal can travel up to approximately 7 meters (in a straight line) within 45 degrees to both right and left of the center line of the receiver.

Figure

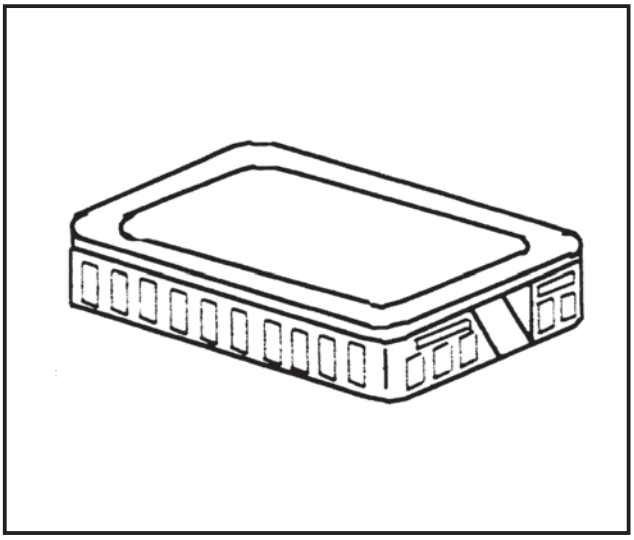

Descriptions

Enables to pick up the room tempreture at the remote position.

Applicable Models

- SLZ-KA VA(L)
- SEZ-KD VA(L)
- PLA-RP BA(2)(3)
- PEA-RP GA
- PKA-RP HAL/KAL
- PCA-RP KA/HA
- PEAD-RP JA(L)
- PSA-RP GA

Specifications

External dimensions (mm)	120 (H) x 70 (W) x 15 (D)
Exterior	White gray (Munsell 4.48Y 7.92/0.66) Material: ABS resin
Operating conditions	Temperature: -20 to 65℃ Humidity: 30 to 90%RH (no condensation)
Installation method	Mounting on single-type switch box (JIS C8336) or directly mounting on wall
Accessory	2-wire cable (12m), Connector with post, Fixing screw (x2)
When combining with environmental measurement controller	
Temperature measuring range	-20 to 65℃
Measurement resolution	0.1℃ (10 to 35℃), 0.5℃ (other temperature ranges)

Dimensions

Unit : mm

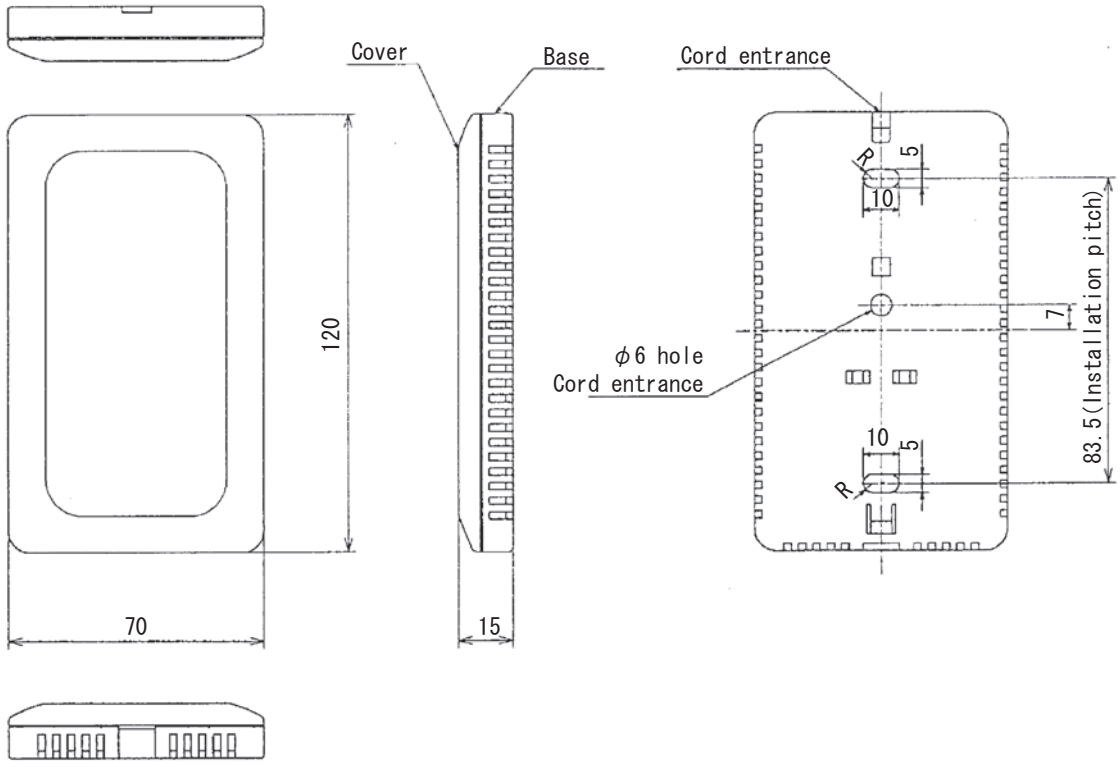

How to Use / How to Install

1 How to Install

(1)Determine the installation of the remote sensor (switch box). The follwing items must be observed.

①Select a place where the remote sensor will detect an average temperature of the room, and where the sensor will not be subject to direct sunlight, heat sources, or the blow-off from the air conditioner, etc.

②Install the sensor within the length of the cable provided (12m). (The cable cannot be extented. If extented, it may cause misoperation due to noise.)

③The following parts must be procured at the site.

- •Cross-recessed pan head screw M4 .... Tow screws
- •Single switch box
- •Thin steel conduit
- •Lock nut, bushing

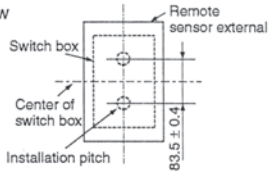

(2)Connect the wires.

•Connect the 2-core cable to the terminal block in the lower case. Peel the sheath of the 2-core cable as shown in Fig.1 , and correctly wire it as shown in Fig.2.

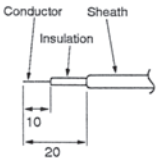

Fig.1

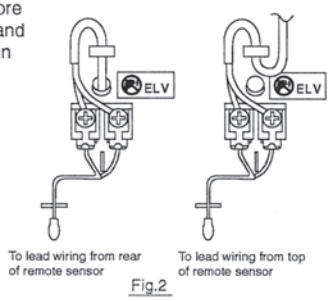

Fig.2

•The wiring connection of the indoor unit's electrical box and remote sensor is an shown in Fig.3. There are three methods of connecting the 2-core cable to the electrical box.

Exchange 2-core cable (connector 20)

①When using the connector attached to the end of the 2-core cable as it is.

②When cutting the connector attached to the end of the 2-core cable and connecting the cable to the terminal block in the I.B. (Indoor Board).

③When using the enclosed post for connection and convert cable.

The above three methods are used according to the indoor unit being used. If the 2-core cable is to be embedded in the wall, follow Fig.4.

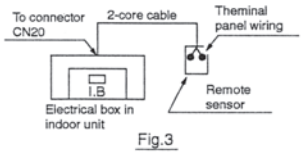

Fig.3

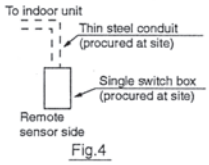

Fig.4

(3)Install the lower case on the wall or switch box.

NOTE	The recommended tightening torque for installing the 2-core cable to the terminal block is 1.17N·m.

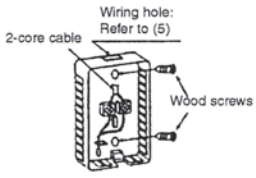

To install on wall

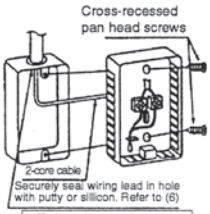

To install on switch box

⚠CAUTION	•If the screws are tightened too hard, the case may break or deform. •Install the sensor on a flat wall. If installed on a bumpy wall, the case may break or trouble may occur.

(4)Fit the upper case.

Catch the two upper claws first, and fit the case as shown on the left.

⚠CAUTION	•Securely fit the case until a catching sound is heard. It may drop off if is not fitted securely.

To remove the case, fit a flat-flap screwdriver into the claw section as shown below, and move the screwdriver in the direction of the arrow.

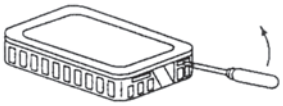

⚠CAUTION
•Do not turn the screwdriver when it is fit into the claw section as the claws may be broken.

(5)Wiring hole for direction installation on wall, etc.

Cut the thin section (shaded section) of the lower case with a knife or pair of nippers, etc. The 2-core cable connected to the terminal block is led out from here.

(6)Securely seal the wiring lead hole with putty or silicon to prevent dew, water drops, cockroaches and other insects from entering.

- •When installing directly on the wall, seal the section cut on the lower case with putty or silicon.
  If the wiring is to be passed through a hole in the wall (when leading the wiring from the rear of the remote sensor), seal the hole in the same manner.
- •When installing on a switch box, seal the connection of the switch box and conduit with putty or silicon.

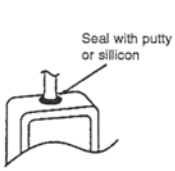

To lead wiring from top of remote sensor.

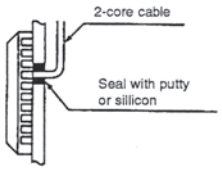

To lead wiring from rear of remote sensor.

To install directly on wall

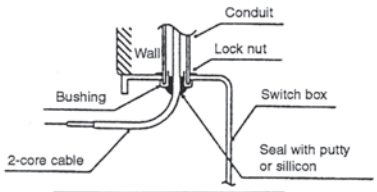

To use switch box

2 Setting of indoor unit

When the remote sensor is connected to the indoor unit and room temepature detection poisition is changed, reset the setting of "Set temp. 4-deg. up" in the heating mode as shown below.

① K control models	: DIP switch Nos 1-6 on the control PCB of the indoor unit.
② M-NET control models	: DIP switch Nos 3-8 on the control PCB of the indoor unit.
③ A control models	: Refer to A-control air-conditioners SERVICE TECHNICAL GUIDE.

Remote On/Off Adapter

PAC-SE55RA-E

Figure

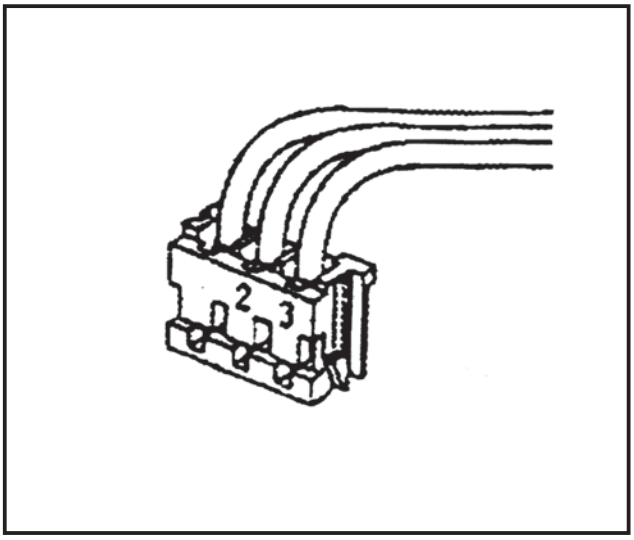

Descriptions

- Operation other than ON/OFF (adjustment of temperature, fan speed, and air direction, for exanple) can be performed even when remote controller operation is prohibited.

Applicable Models

- SLZ-KA VA(L)
- SEZ-KD VA(L)
- PLA-RP BA(2)(3)
- PEA-RP200/250GA
- PKA-RP HAL/KAL
- PCA-RP KA/HA
- PEAD-RP JA(L)
- PSA-RP GA

Specifications

Function	ON/OFF by external signal External signal ON (remote control disabled) / OFF (remote control enabled) switchable
Input signal	No-voltage contact (ON/OFF level signal)
Connector	3P (connected to CN32 on outdoor unit control board)
Cable type	3-wire cable, for extension: Sheathed vinyl cord or cable (0.5 to 1.25mm^2)
Cable length	2m (max. 10m when extended locally)

Dimensions

Unit : mm

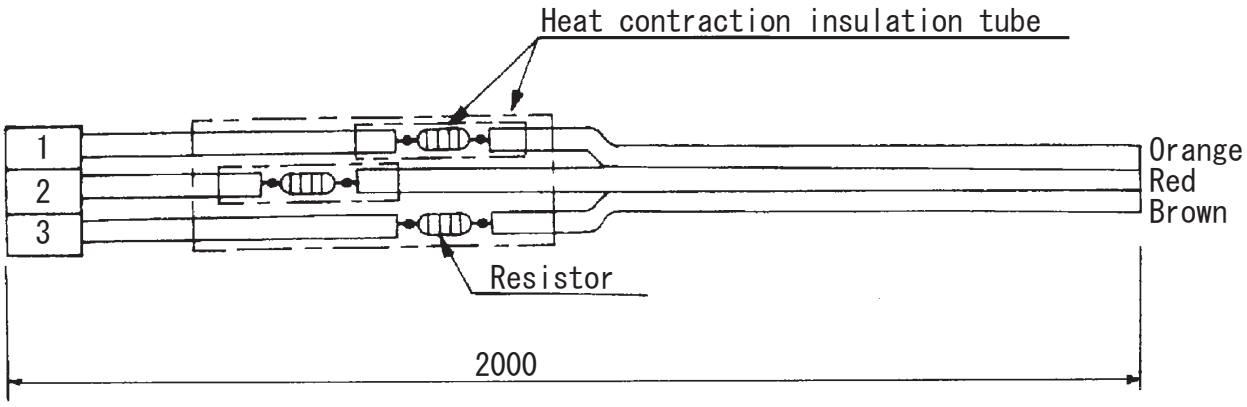

OPTIONAL PARTS

How to Use / How to Install

1 Connecting to the Indoor Unit

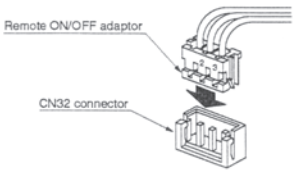

1. Connect to the connector CN32 on the indoor controller board.
2. Press the connector for the remote ON/OFF adaptor into the CN32 connector.
   The connector can only be connected in one direction only. Do not force the connection.

2 Locally Procured Wiring

With the remote ON/OFF adaptor, variations of connection method with the locally installed circuit will provide different types of operating configurations.

Example: External timer operation, remote control operation

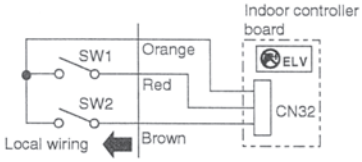

1. Basic Connection Method
   - SW1 - Operating switch
     Performs operation/stopping of indoor unit.
   - SW2 - Selecting switch
     For selecting whether the operation/stopping is to be performed by external circuit or remote control.*
     * Also includes system controller (central controller).
2. Switch Settings (Refer to table at right for details.)

SW2 - If on.
- Operation/stopping cannot be controlled from remote controller.
  Other operations (such as temperature settings and changing fan speed) can be performed.
- Operation/stopping can be performed by SW1.

SW2 - If off.
- Operations can be performed from remote controller.
- Operation/stopping cannot be performed by SW1.

		SW2	
		ON	OFF
Remote controller		Cannot perform operation/stopping	Can perform operation/stopping
SW1	ON	Operation	Cannot perform operation/stopping
	OFF	Stopping	

3 Examples of Usage

In either case, there is a 5 to 6 second delay from the time when the operating command is sent until the unit operates.

1. To perform operation/stopping by only remote operation or external timer and to prohibit operation/stopping by the remote controller, use the following circuits.

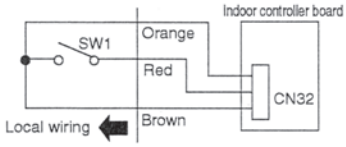

For remote operation

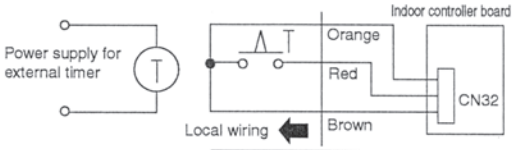

For remote timer operation

2. To perform operation/stopping by remote operation or external timer and allow operation/stopping by the remote controller, use the following circuits.

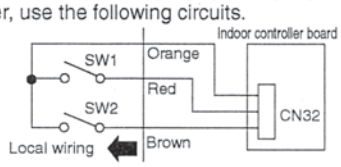

For remote operation

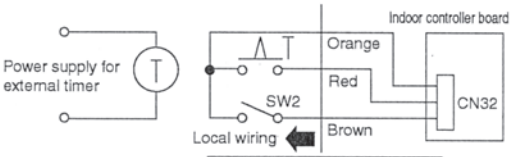

For remote timer operation

3. To start operation by remote operation and then freely use remote controller, use the following circuit.

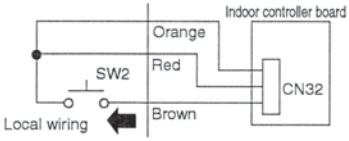

Use a momentary switch (a switch that is turned on manually and turns off automatically) for SW2.
Press SW2 (for 1 second or more) and the operation starts. After this, the remote controller can be used for operations.

4. To permit/prohibit the use of the remote controller by an external circuit.

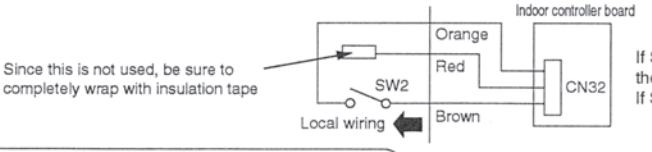

If SW2 is on, operation cannot be performed by the remote controller.
If SW2 is off, operation is permited.

4 Wiring Restrictions

Keep the length of wire from the circuit board of the indoor unit within 10 meters. Excessive length could cause improper operation.

Use a transit relay when extending wiring such as remote wiring.

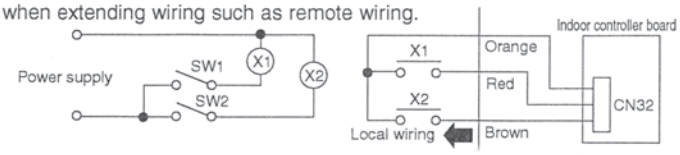

OPTIONAL PARTS

Remote Operation Adapter

PAC-SF40RM-E

Figure

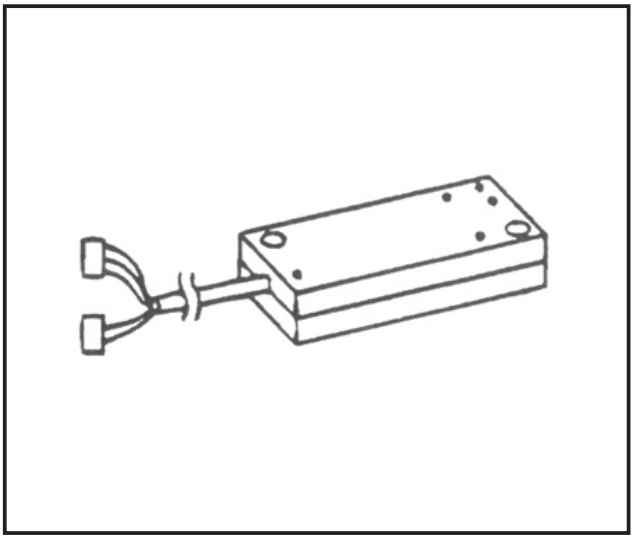

Descriptions

Extraction of non-voltage contact output.
*Use of optional [Remote Operation Adapter] and "remote display panel" Part to be provided at your site) provides non-voltage contact outputs of signals (operation,error) and operation/stop input function.

Applicable Models

- SLZ-KA VA
- SEZ-KD VA
- PLA-RP BA(2)(3)
- PEAD-RP JA(L)
- PEA-RP200/250GA
- PCA-RP KA/HA
- PSA-RP GA

Specifications

Power		Supplied from indoor unit
External dimensions (mm)		160 x 70 x 30
Exterior		Material: ABS resin, Color: Gray (Munsell 3.07Y 6.16/0.33)
Weight		200g
Operating conditions		Indoor only Temperature: 0 to 40℃, Humidity: 35 to 85%RH (no condensation)
Connecting cable (indoor unit)		5-wire (3 + 2) cable with connector (9-pin, 4-pin)
Output signal		No-voltage "a" contact (relay contact method)
	Number of Contacts	2 (Operation / Alarm)
	Contact capacity	200V AC (30V DC)/1A or less
	Minimum load	10mA
Input signal		Pulse signal (instantaneous non-voltage "a" contact), pulse width: 200ms or more
	Number of Contacts	1 (start/stop)
Input/output signal cable (locally prepared)	Type	CV, CVS, or equivalent sheathed vinyl cord/cable
	Diameter	Twisted: 0.5 to 1.25mm2, Single: Φ0.65 to Φ1.2mm
	Distance	Output signal cable: Max. 100m Input signal cable: Max. 10m (Extension relay must be used when exceeding 10m)

* This kit cannot be used with a wireless remote controller.
Water leakage alarm will not be displayed if the unit is built into the ceiling (PDH)

Dimensions

Unit : mm

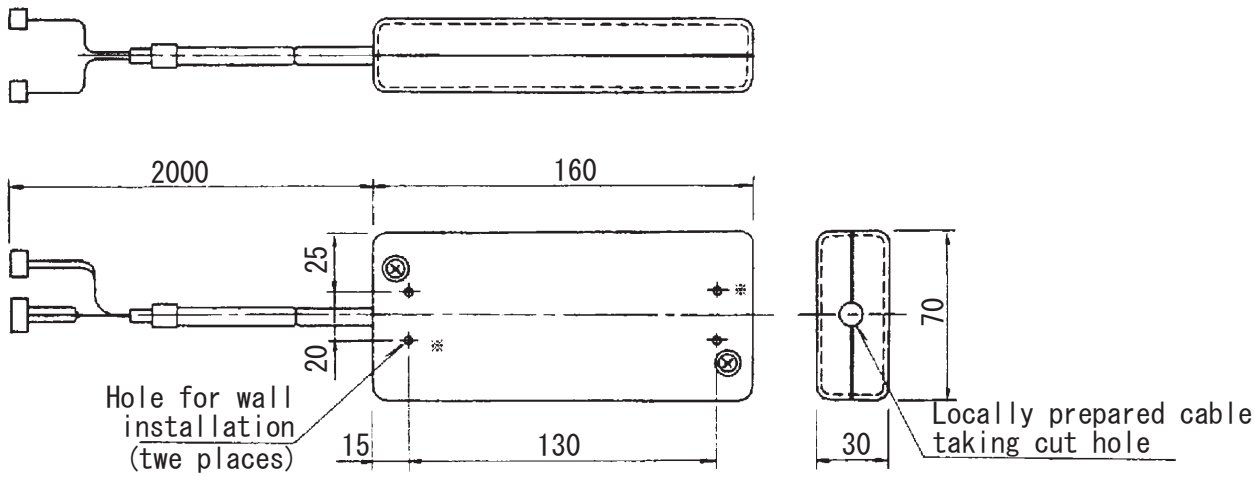

OPTIONAL PARTS

How to Use / How to Install

1 Confirming the Supplied Parts

(1) Parts Provided

Check that the box includes the following parts in addition to this installation manual.

Parts	① Remote operation adaptor unit	② Cord clamp	③ Wall mount bracket
Shape	(with 2 meter wire for connecting with indoor unit)	(Use this clamp if the local wiring is too thick to be held by the clamp inside the main unit.)	
Quantity	1	1	1
Parts	④ Screws for mounting ③	⑤ Cushion material	⑥ Tie-wrap
Shape	3.5 x 12 (Black)	(With adhesive on both sides.)	(Use this for bundling lead wires.)
Quantity	4	1	5
Parts	⑦ Cord clamp	⑧ Screws for mounting ⑦	⑨ Screws for mounting main unit
Shape		3.5 x 12 (Black)	3.5 x 12 (Black)
Quantity	5	5	2

(2) Locally Procured Parts

Note : Please keep LVD. LVD;Low Voltage Directive (EC Directive of Europe)
Apply some countermeasure for wiring and relay not to be touched from outside.
① Wiring should be covered by the insulation tube. ② Use relay with EU regulation.

Item	Part Name	Model & Specifications
External output function	External signal output wire	Use a vinyl cord with sheath or cable Electric wire type: CV, CVS or equivalent Electric wire size: 0.5 mm² to 1.25 mm² Single wire: ø0.65 mm to ø1.2 mm
	Display lamp, etc.	No-voltage contact AC 220 to 240 V (DC30V), 1A or less
External input function	External signal input wire	Use a vinyl cord with sheath or cable Electric wire type: CV, CVS or equivalent Electric wire size: 0.5 mm² To 1.25 mm² (Single wire: ø0.65 mm to ø1.2 mm)
	Switch	No-voltage momentary contact (Operation ⇄ Stop is switched by input of a pulse of 200 ms or more)

2 External Dimension Drawing

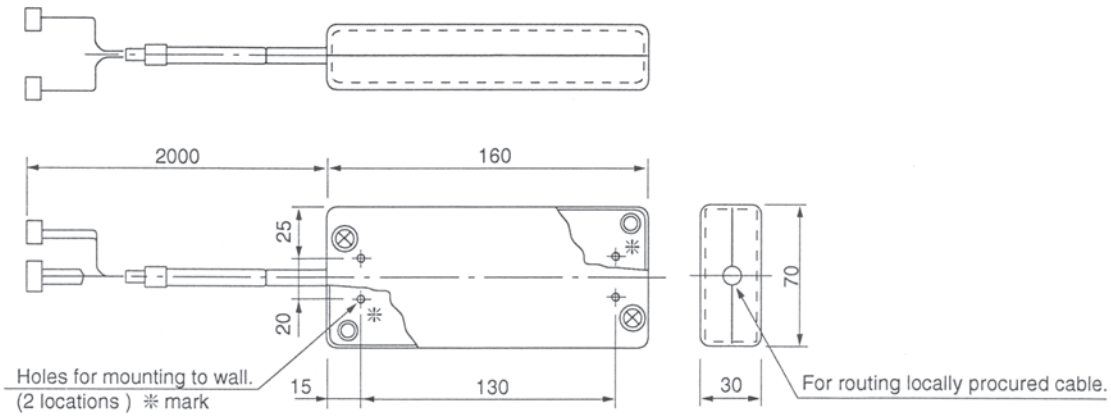

OPTIONAL PARTS

3 Wiring

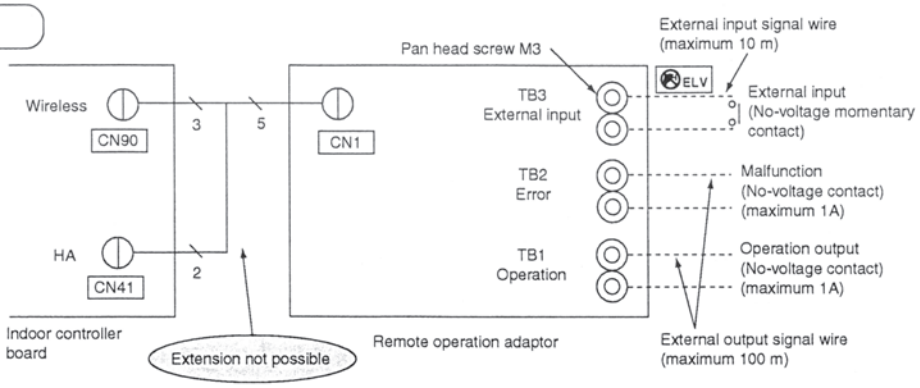

⚠Caution

1) TB3 is a dedicated terminal for contact input. Do not apply voltage. Applying voltage will cause damage to the circuit board inside the for the indoor unit controller.
2) Always use the cable provided for connecting the unit to the indoor unit. Never make modifications to extend this cable. Extensions could cause the cable to be affected by external noise which could lead to mis-operation.
If an extension is needed, refer to specification chart in "6. Product Specifications" a follow it when extending the external signal wire.

<Connecting to the indoor unit>

① If external output functions are used ····· Insert the 9-electrode (3 core) side of the cable provided into CN90 on the controller circuit board for the indoor unit.

② If external input functions are used ····· Insert the 4-electrode (2 core)side of the cable provided into CN41 on the controller circuit board for the indoor unit.

※ The connector can only be inserted in one direction. Be sure to check that the connector is in the proper direction before inserting. Forcing the connector will cause damage.

4 How to Install

There are three ways to mount the remote operation adaptor main unit: [A] Using mounting bracket, [B] Mounting directly, and [C] Using the cushion material.

(1) Installation Example (Suspended Type)

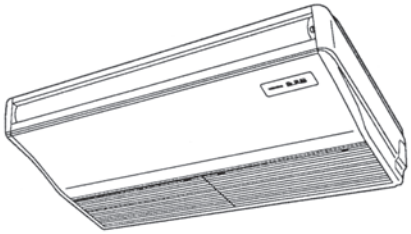

[A] Mounting to wall mounting bracket

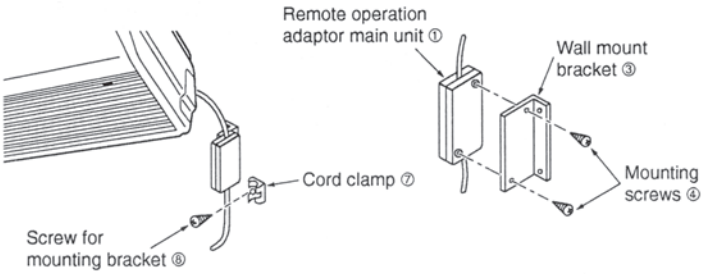

⚠Caution

1) When mounting the remote operation adaptor main unit, be sure to use the mounting hardware to mount it to a wall or beam so that an inspection port is available for servicing.
2) If there is any loose remaining wire after installation, use a tie-wrap ⑥ to bundle it.

[B] Mounting directly to wall

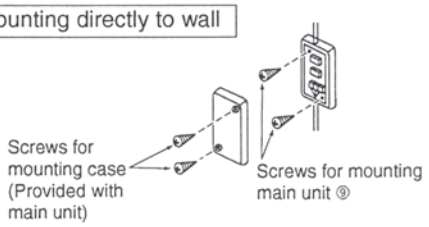

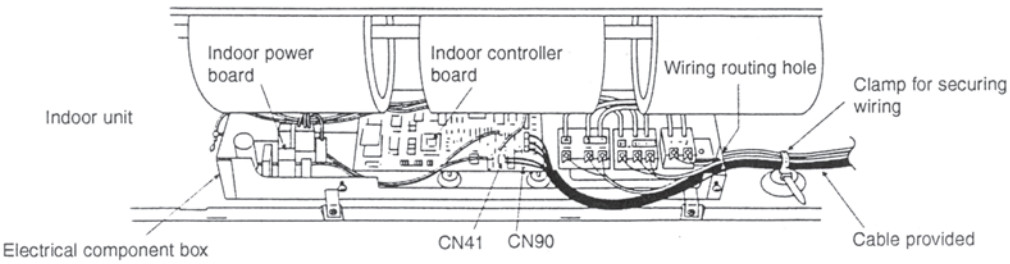

OPTIONAL PARTS

(2) Installation Example 2 [Cassette Type]

[A] If recess-mounted into ceiling

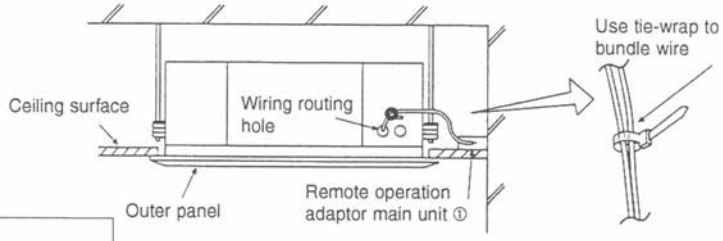

⚠Caution

1) When mounting the remote operation adaptor main unit, be sure to use the mounting hardware to mount it to a wall or beam so that an inspection port is available for servicing.
2) If there is any loose remaining wire after installation, use a tie-wrap ⑥ to bundle it.

Connector Cable For Remote Display PAC-SA88HA-E

Figure

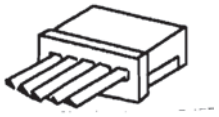

Descriptions

- This adapter enables control of several units with a multiple remote control display.

Applicable Models

- SLZ-KA VA(L)
- SEZ-KD VA(L)
- PLA-RP BA(2)(3)
- PEA-RPRP200/250GA
- PKA-RP HAL/KAL
- PCA-RP KA/HA
- PEAD-RP JA(L)
- PSA-RP GA

Specifications

Function	Connecting cable to output status signal of the air conditioner, and ON/OFF by external (pulse) signal.
Input signal	Pulse signal (no voltage instantaneous ON contact) Pulse duration 200m/s or more.
Connector	5P (connector to CN51 or CN52 on indoor unit control board)
Cable type	5-wire vinyl cable, for extension:sheathed vinyl cord or cable (0.5 to 1.25mm²)
Cable lengh	2m (max.10m when extended locally)
Output capacity)	DC12V 75mA (Max 0.9W)

Dimensions

Unit : mm

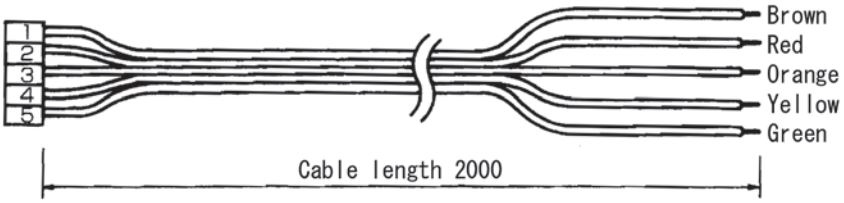

How to Use / How to Install

MULTIPLE REMOTE CONTROL DISPLAY

You can control several units with a multiple remote control display, by wiring an optional multiple remote controller adapter (PAC-SA88HA-E) with relays and lamps on the market.

How to wire

(1) Connect the multiple remote controller adapter to the connector CN51 on the indoor controller board.

(2) Wire three of the five wires from the multiple remote controller adapter as shown in the figure below.

<Wiring >

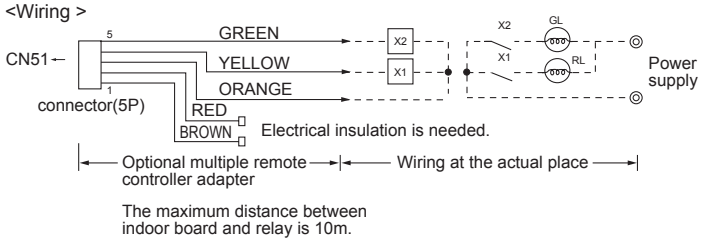

[Notes on Signs]
X1:Relay (for operation lamp)
X2:Relay (for check lamp)
RL:Operation Lamp
GL:Check Lamp

[Field supplied parts]
Relays:12V DC with rated coil power consumption below 0.9W.
Lamps:Matching to power supply voltage.

<System>

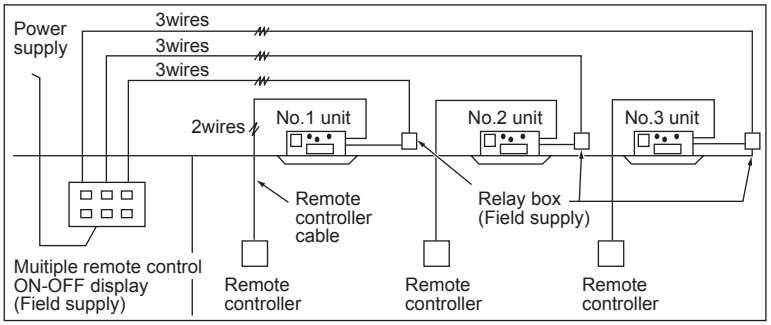

(Operation check)

<Wiring diagram>

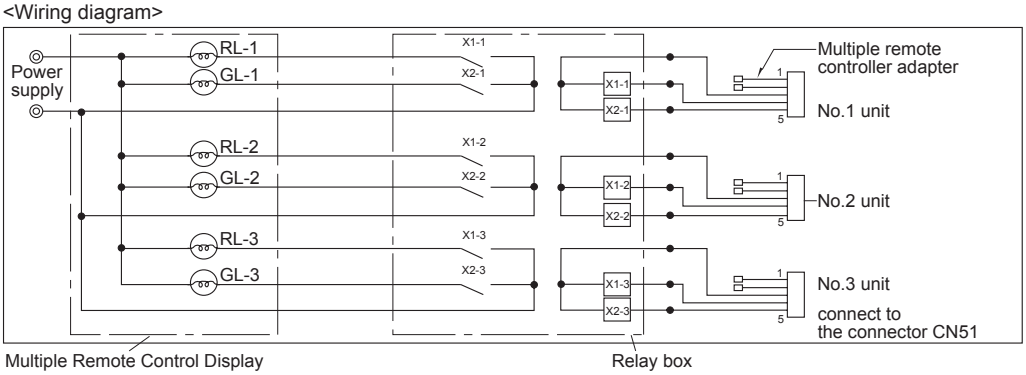

OPTIONAL PARTS

Distribution Pipe

MSDD-50TR-E

* model change from MSDD-50SR-E

Photo

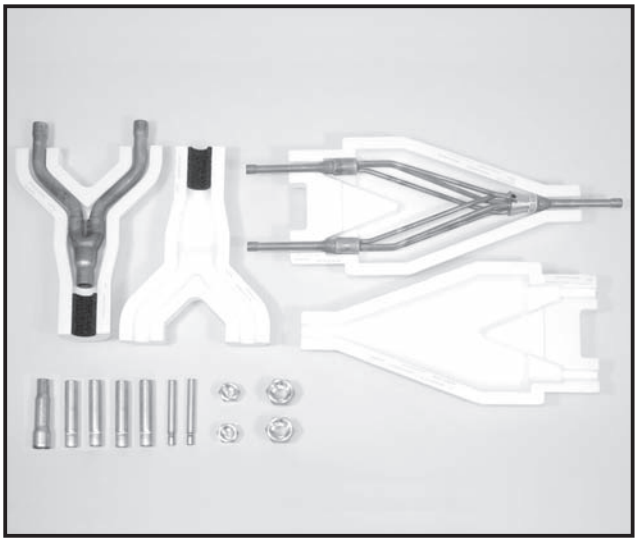

Descriptions

Branch pipe for Multi-System Twin type Twin use. (50:50)

Applicable Models

- PU-P71/100/125/140
- PUH-P71/100/125/140
- PUHZ-RP71/100/125/140
- PUHZ-HRP71/100/125

for Twin 50:50 use

Specifications

Main body	Distribution ratio	Outdoor unit capacity is divided into two (50:50)
	Number of distribution pipes	1 each for liquid pipe and gas pipe
	Pipe material	Phosphate deoxidized copper C1220T-OL (JIS H3300)
Accessory	Pipe cover	Styrofoam molding (1 each for liquid pipe and gas pipe)
	Joint	7 joints (4 types)

Dimensions

Unit : mm

LIQUID PIPE

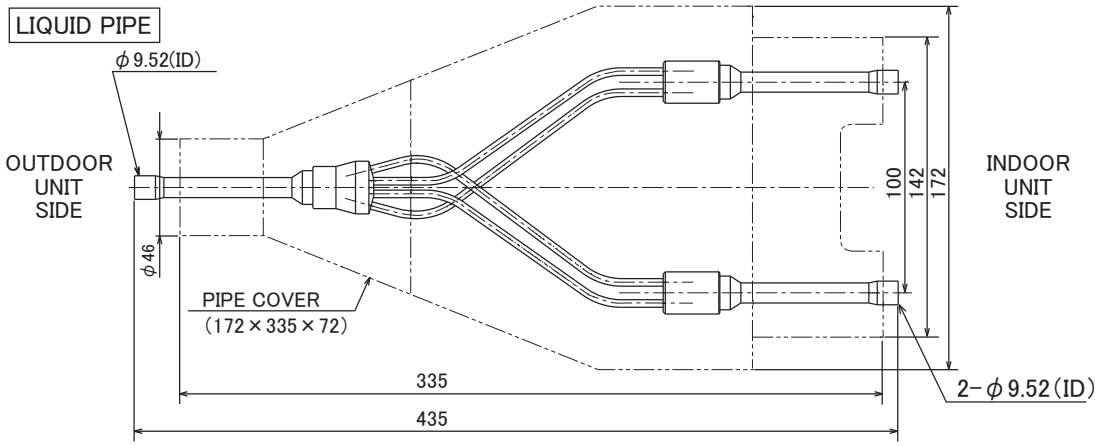

GAS PIPE

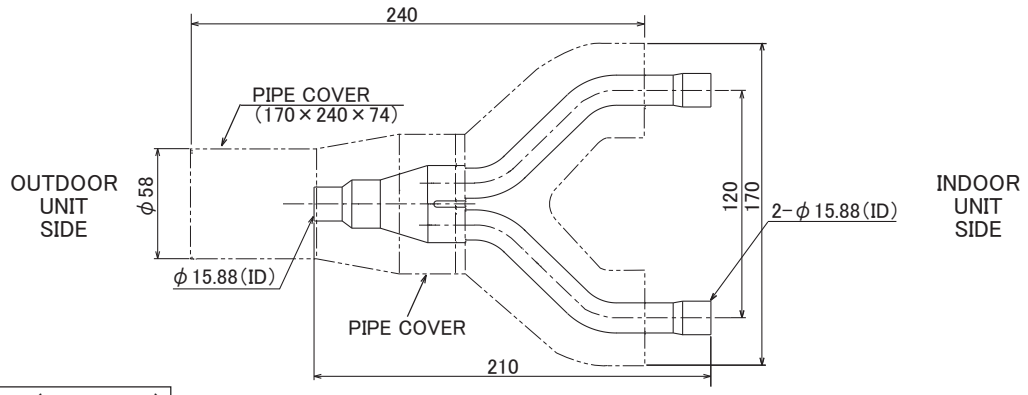

JOINT(Accessory)

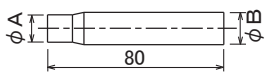

ΦA(ID)	ΦB(OD)	Amount
6.35	9.52	2
9.52	15.88	2
12.7	15.88	2

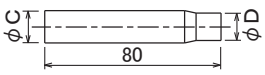

ΦC(ID)	ΦD(OD)	Amount
19.05	15.88	1

How to Use / How to Install

Package Air-conditioner Optional Parts Instruction Sheet for Simultaneous Twin Distributing Pipe

Make sure that you have all the following parts before installation.

① Instruction sheet	② Gas pipe	③ Liquid pipe	④ Pipe cover (for gas pipe)	⑤ Pipe cover (for liquid pipe)	⑥ Joint pipe	⑦Flare nut
This sheet 1 sheet	1pc	1pc	1pc	1pc	Ⓐ φ9.52→ φ6.35···· 2pcs Ⓑφ15.88→φ12.7····· 2pcs Ⓒφ15.88→φ19.05···· 1pc Ⓓφ15.88→φ9.52····· 2pcs	1/4F····2pcs 1/2F····2pcs For R410A indoor unit.

● See the following for the specifications of gas pipe ② ,and liquid pipe ③ ,

■MSDD-50TR

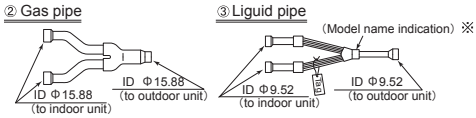

※ Procure the following at local site in addition to the above
- Tape for heat insulator sealing
- Extended pipe for refrigerant pipe

Pipe size and limit to refrigerant pipe

■For R410A (Table 1-2)

Outdoor unit capacity	Pipe size (mm)				Actual pipe length (m)			Height Difference (m)		Note 1 Number of bends
	Gas pipe side		Liquid pipe side		Indoor-Outdoor	A+B+C=	Indoor-Indoor	Indoor-Outdoor	Indoor-Indoor	
	Outdoor unit side	Indoor unit side	Outdoor unit side	Indoor unit side						
71(3Hp)	Φ15.88 (5/8)	RP35, 50 Φ9.52(3/8) Φ12.7(1/2) RP60~125 Φ15.88(5/8)	Φ9.52 (3/8)	RP35, 50 Φ6.35(1/4) RP60~125 Φ9.52(3/8)	–	50m or less	|B−C| = 8m or less	H = 30m or less	h = 1m or less	15 or less
100~140 (4~6Hp)						75m or less				

Note 1: Limit the number of bends for refrigerant pipes to 8 in each of the 〈A+B〉 and 〈A+C〉 ranges.
※See the installation manual provided with the main unit for details on chargeless pipe length and refrigerant additional charge amount.

(Fig. 1)

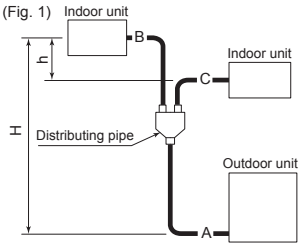

Pipe connections

Combination pattern of indoor and outdoor units and joints to be used:

(Fig. 2)

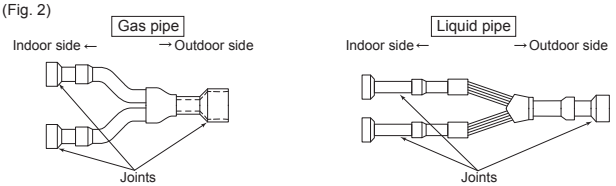

1. Perform work, taking care with the followings:
   - Be sure to check the combination pattern of indoor and outdoor units and joints to be used (Table 2).
   - Be sure to observe the limits to refrigerant pipe length and number of bends (Table 1).
   - Insert the refrigerant pipe (procured at local site) and joint ⑥ into the expanded pipe portions of distributing pipe (this product) until they stop, and then connect them using anti-oxidization soldering.
   - There is no restriction on the orientation of distributing pipe (this product)during installation.
   - Take care that no foreign object, such as dust, enters during pipe connecting work.
   - Remove the tag of liquid pipe ③ after checking it.
2. Pipe connections
   - The provided joints ⑥ will be necessary depending on the capability of model used: See (Table 2), and connect the joints as shown in (Fig. 2).
   - Do not bend or widen the distributing pipe (liquid pipe).

■For R410A (Table 2-2)

Outdoor unit	Indoor unit	Joint to be used
71(3Hp)	35+35 (1.6+1.6)	ⒷOuter Φ15.88−inner Φ12.7 [indoor gas pipe side], ⒶOuter Φ9.52−inner Φ6.35 [indoor liquid pipe side]
		ⒸOuter Φ15.88−inner Φ9.52 [indoor gas pipe side], ⒶOuter Φ9.52−inner Φ6.35 [indoor liquid pipe side]
100(4Hp)	50+50 (2+2)	ⒷOuter Φ15.88−inner Φ12.7 [indoor gas pipe side], ⒶOuter Φ9.52−inner Φ6.35 [indoor liquid pipe side]
125(5Hp)	60+60 (2.5+2.5)	No joint is necessary.
140(6Hp)	71+71 (3+3)	

※ Installation positions in brackets ( ).

Heat insulation work

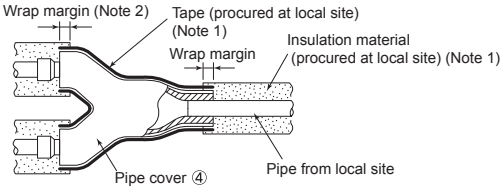

Notes:
1. Cover the entire refrigerant pipe (procured at local site) with heat insulation material. When using generally available heat insulation material, heat-resistant insulation material (at least 12 mm thick).
2. Pipe covers ④ and ⑤ will shrink slightly at high temperatures: Provide wrap margins with insulation material.

- Fit gas pipe ② into pipe covers ④, and then seal the mated portion of pipe covers ④ using heat insulation seal tape (procured at local site).
- Process liquid pipe ③ in the same way.

Please install contents other than this description on the main part of a product with an attached installation description, and use them as it.

Photo

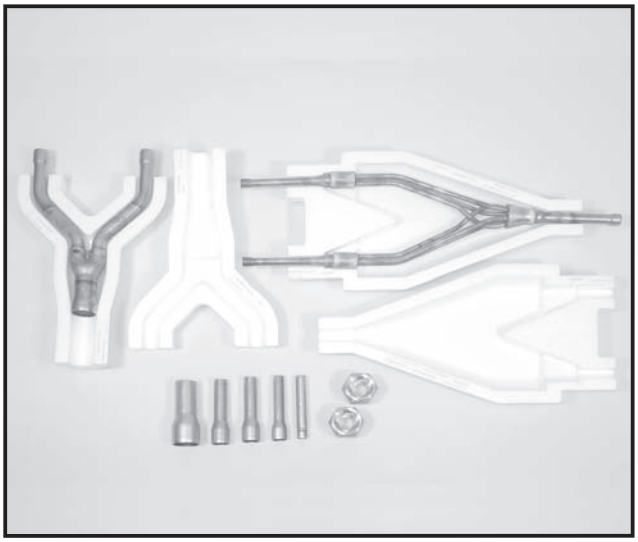

Descriptions

Branch pipe for Multi-System Twin type Twin use. (50:50)

Applicable Models

- PUHZ-P200/250
- PUHZ-RP200/250
  for Twin 50:50 use

Specifications

Main body	Distribution ratio	Outdoor unit capacity is divided into two (50:50)
	Number of distribution pipes	1 each for liquid pipe and gas pipe
	Pipe material	Phosphate deoxidized copper C1220T-OL (JIS H3300)
Accessory	Pipe cover	Styrofoam molding (for liquid pipe and gas pipe)
	Joint	5 joints (4 types)

Dimensions

Unit : mm

LIQUID PIPE

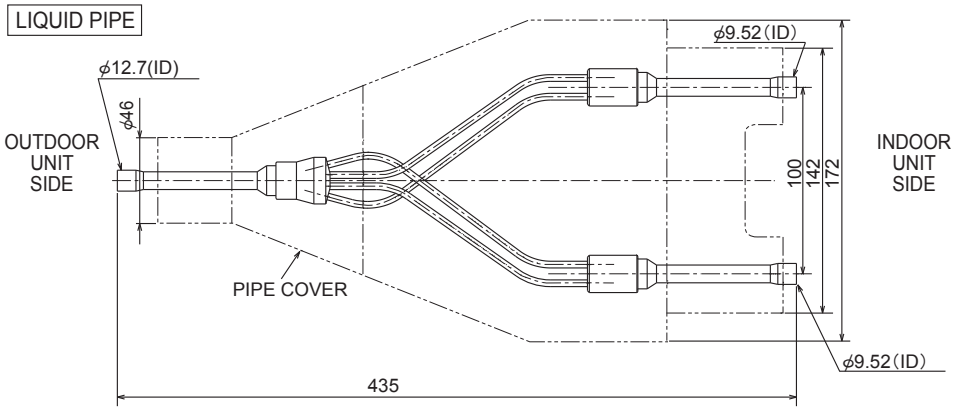

GAS PIPE

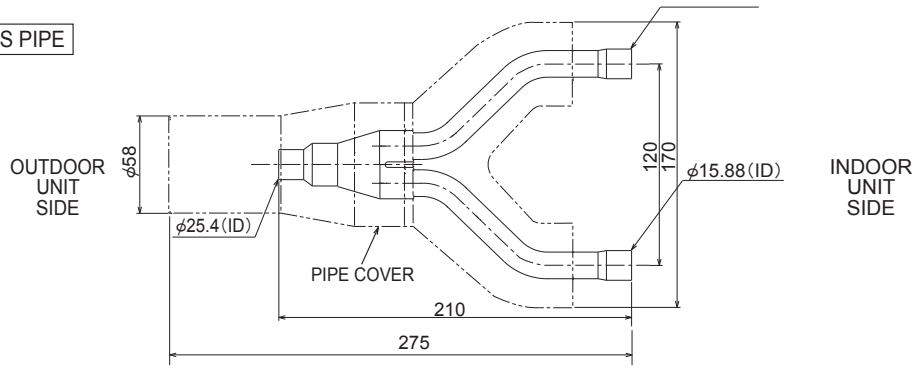

JOINT(Accessory)

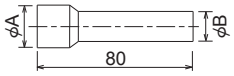

ΦA(ID)	ΦB(OD)	Amount
28.6	25.4	1
15.88	12.7	1
19.05	15.88	2

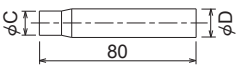

ΦC(ID)	ΦD(OD)	Amount
9.52	12.7	1

How to Use / How to Install

Package Air-conditioner Optional Parts Instruction Sheet for Simultaneous Twin Distributing Pipe

Make sure that you have all the following parts in packing box before installation.

① Instruction sheet	② Gas pipe	③ Liquid pipe	④ Pipe cover (for gas pipe)	⑤ Pipe cover (for liquid pipe)	⑥ Joint pipe	⑦Flare nut
This sheet 1 sheet	1pc	1pc	1pc	1pc	Φ12.7→Φ 9.52 ····· 1pc Φ12.7→Φ 15.88 ····· 1pc Φ15.88→Φ19.05 ····· 2pcs Φ25.4→Φ28.6 ····· 1pc	5/8F ····2pcs For R410A indoor unit.

● See the following for the specifications of gas pipe ② ,and liquid pipe ③ ,

■ MSDD-50WR

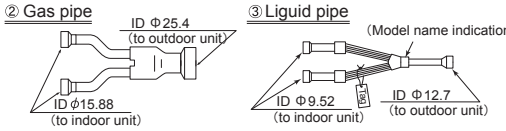

※ Procure the following at local site in addition to the above
- Tape for heat insulator seal
- Extended pipe for refrigerant pipe

Pipe size and limit to refrigerant pipe

■For R407C fixed speed models (Table 1-1)

Outdoor unit capacity	Pipe size (mm)				Actual pipe length (m)			Height Difference (m)		Note 1 Number of bends
	Gas pipe side		Liquid pipe side							
	Outdoor unit side	Indoor unit side	Outdoor unit side	Indoor unit side	Indoor-Outdoor	A+B+C=	Indoor-Indoor	Indoor-Outdoor	Indoor-Indoor	
200(8Hp)	φ25.4 (1)	Φ19.05 (3/4)	Φ12.7 (1/2)	Φ9.52 (3/8)	A + B = A + C = 50m or less	70m or less	|B−C| = 8m or less	H = 40m or less	h = 1m or less	15 or less
250(10Hp)	φ28.6 (1-1/8)									

■For R410A Power Inverter models (Table 1-2)

Outdoor unit capacity	Pipe size (mm)				Actual pipe length (m)			Height Difference (m)		Note 1 Number of bends
	Gas pipe side		Liquid pipe side							
	Outdoor unit side	Indoor unit side	Outdoor unit side	Indoor unit side	Indoor-Outdoor	A+B+C=	Indoor-Indoor	Indoor-Outdoor	Indoor-Indoor	
200(8Hp)	Φ25.4 (1)	RP1.6, 2, 35, 50 Φ12.7(1/2)	Φ9.52 (3/8)	RP1.6, 2, 35, 50 Φ6.35(1/4)	A + B = A + C = 80m or less	80m or less	|B−C| = 8m or less	H = 40m or less	h = 1m or less	15 or less
250(10Hp)	Φ25.4 Φ28.6 (1-1/8)	RP2.5~5, 60~125 Φ15.88(5/8)	Φ12.7 (1/2)	RP2.5~5, 60~125 Φ9.52(3/8)						

Note 1: Limit the number of bends for refrigerant pipes to 8 in each of the 〈A+B〉 and 〈A+C〉 ranges.
※See the installation manual provided with the main unit for details on chargeless pipe length and refrigerant additional charge amount.

(Fig. 1)

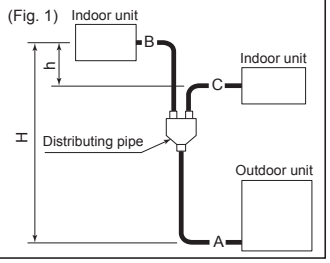

Pipe connections

Combination pattern of indoor and outdoor units and joints to be used:

(Fig. 2)

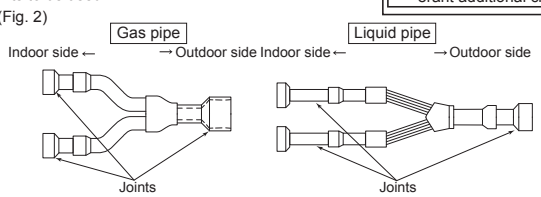

1. Perform work, taking care with the followings:
   - Be sure to check the combination pattern of indoor and outdoor units and joints to be used (Table 2).
   - Be sure to observe the limits to refrigerant pipe length and number of bends (Table 1).
   - Insert the refrigerant pipe (procured at local site) and joint ⑥ into the expanded pipe portions of distributing pipe (this product) until they stop, and then connect them using anti-oxidization soldering.
   - There is no restriction on the orientation of distributing pipe (this product)during installation.
   - Take care that no foreign object, such as dust, enters during pipe connecting work.
   - Remove the tag of liquid pipe ③after checking it.
2. Pipe connections
   - The provided joints ⑥ will be necessary depending on the capability of model used: See (Table 2), and connect the joints as shown in (Fig. 2).
   - Do not bend or widen the distributing pipe (liquid pipe).

■For R407C fixed speed (Table 2-1)

Outdoor unit	Indoor unit	Joint to be used
200(8Hp)	100+100 (4+4)	Outer Φ15.88−inner Φ19.05 [indoor gas pipe side]
250(10Hp)	125+125 (5+5)	Outer Φ25.4−inner Φ28.6 [outdoor gas pipe side]

※Installation positions in brackets ( ).

■ For R410A Power Inverter (Table 2-2)

Outdoor unit	Indoor unit	Joint to be used
200(8Hp)	100+100 (4+4)	Outer Φ12.7−inner Φ9.52 [outdoor liquid pipe side]
250(10Hp)	125+125 (5+5)	HA:Outer Φ25.4−inner Φ28.6 [outdoor gas pipe side] HA2,KA:No joint necessary

Heat insulation work

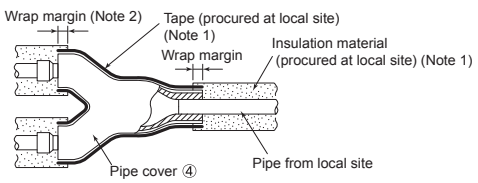

Notes:
1. Cover the entire refrigerant pipe (procured at local site) with heat insulation material. When using generally available heat insulation material, heat-resistant insulation material (at least 12 mm thick).
2. Pipe covers ④ and ⑤ will shrink slightly at high temperatures: Provide wrap margins with insulation material.

- Fit gas pipe ② into pipe covers ④, and then seal the mated portion of pipe covers ④ using heat insulation seal tape (procured at local site).
- Process liquid pipe ③ in the same way.

Please install contents other than this description on the main part of a product with an attached installation description, and use them as it.

Distribution Pipe

MSDT-111R-E

Photo

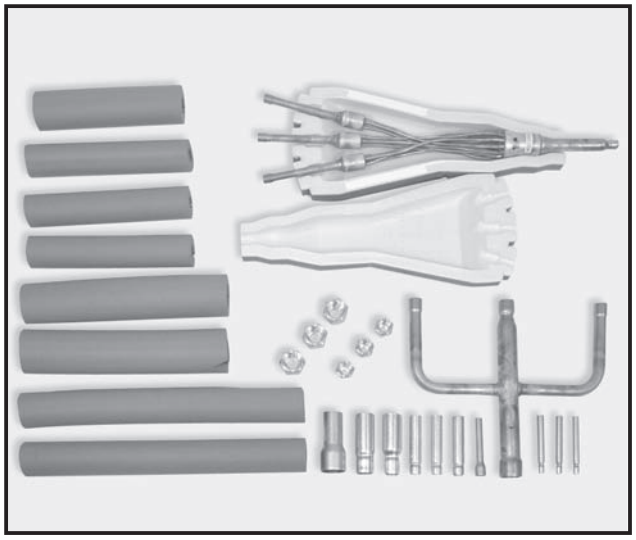

Descriptions

3-branch pipe for Multi-System Triple use.(33:33:33)

Applicable Models

- PUHZ-P140/200/250
- PUHZ-RP140/200/250
- PU(H)-P140
  for 33:33:33 Triple use

Specifications

Main body	Distribution ratio	Outdoor unit capacity is divided into three (33:33:33)
	Number of distribution pipes	1 each for liquid pipe and gas pipe
	Pipe material	Phosphate deoxidized copper C1220T-OL (JIS H3300)
Accessory	Pipe cover	Polyethylene foam molding (for liquid pipe) EPT sponge rubber type (for gas pipe)
	Joint	10 joints (6 types)

Dimensions

Unit : mm

LIQUID PIPE

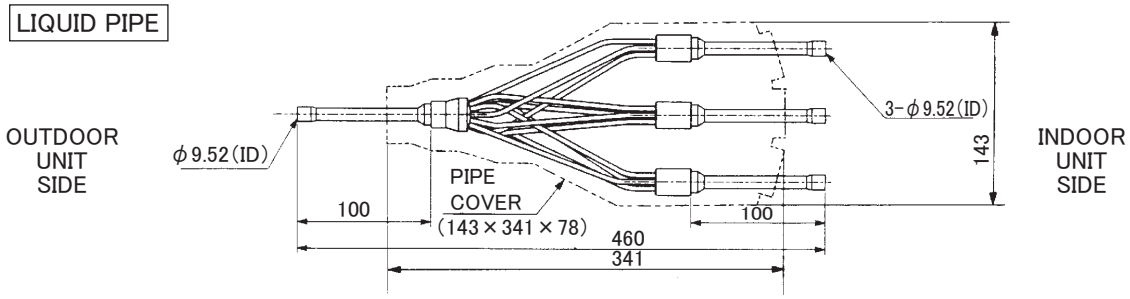

GAS PIPE

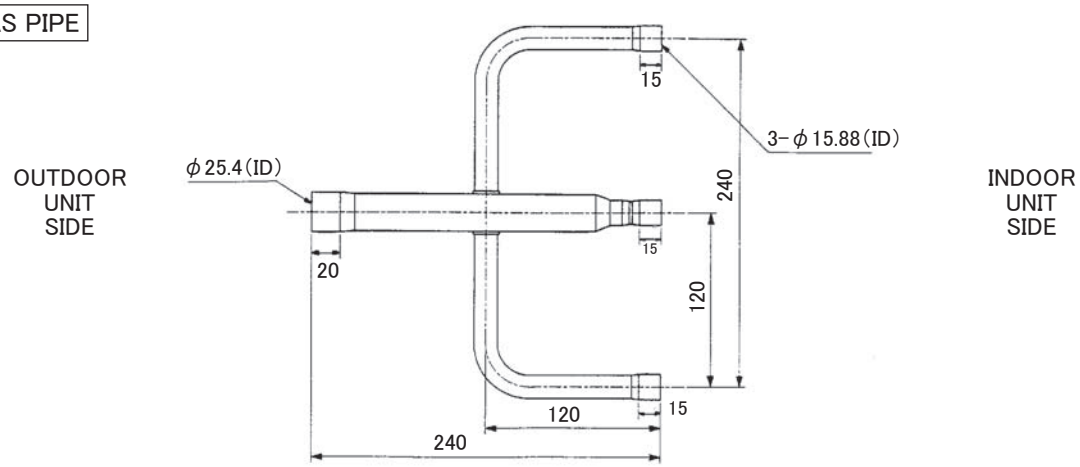

JOINT(Accessary)

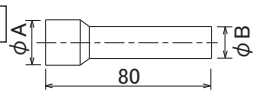

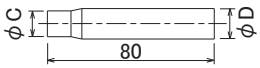

ΦA(ID)	ΦB(OD)	Amount
12.7	9.52	1
28.6	25.4	1

ΦC(ID)	ΦD(OD)	Amount
12.7	15.88	3
19.05	25.4	1
6.35	9.52	3
15.88	25.4	1

How to Use / How to Install

Package Air-conditioner Optional Parts Instruction Sheet for Simultaneous Triple Distributing Pipe exclusively used with Free Compo Multi-Units

MSDT-111R-E 〔Indoor unit same-capacity triple 33:33:33〕
Outdoor unit PU(H)-P6, 140GA type (R407C fixed speed)
Outdoor unit PUHZ-RP6, 140HA type (R410A power inverter)
Outdoor unit PUH-P8～10, 200～250MYA type (R407C fixed speed)
Outdoor unit PUHZ-RP8～10, 200～250HA type (R410A power inverter)

Make sure that you have all the following parts in packing box before beginning installation:

① Instruction sheet	② Gas pipe	③ Liquid pipe	④ Pipe cover (for gas pipe)	⑤⑥ Pipe covers (for gas pipe)	⑦ Pipe cover (for liquid pipe)	⑧⑨ Pipe covers	⑩ Bands	⑪ Joint	⑫ Flare nut
This sheet 1 sheet	1pc	1pc	1pc	⑤Outer Φ50×250−1pc ⑥Outer Φ43×350−2pc	2pcs	⑧Outer Φ42×180−1pc ⑨Outer Φ38×200−3pcs	8pcs	See Table 1.	ⓐ1/4F……3pcs ⓑ1/2F……3pcs For R410A indoor unit.

●See the following for the specifications of gas pipe ② and liquid pipe ③ :

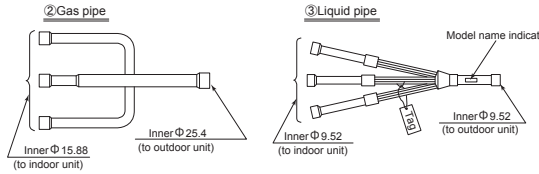

※Procure the following at local site in addition to the above:
・Tape for heat insulator seal
・Extended pipe for refrigerant pipe

Joint specifications and provided numbers 〈Table 1〉

Sizes of joint pipe ends (mm)	Numbers provided
Ⓐ Outer Φ9.52−Inner Φ6.35	3
Ⓑ Outer Φ9.52−Inner Φ12.7	1
Ⓒ Outer Φ15.88−Inner Φ12.7	3
Ⓓ Outer Φ25.4−Inner Φ19.05	1
Ⓔ Outer Φ25.4−Inner Φ15.88	1
Ⓕ Outer Φ25.4−Inner Φ28.6	1

Pipe size and limit to refrigerant pipe

■**For R407C fixed speed models** 〈Table 2-1〉

Outdoor unit capacity	Pipe size (mm)				Actual pipe length (m)			Height Difference (m)		Note 1 Number of bends
	Gas pipe side		Liquid pipe side		Indoor-Outdoor	A+B+C+D=	Indoor-Indoor	Indoor-Outdoor	Indoor-Indoor	
	Outdoor unit side	Indoor unit side	Outdoor unit side	Indoor unit side						
140 (6Hp)	Φ19.05 〈3/4〉	Φ15.88 〈5/8〉	Φ9.52 〈3/8〉	Φ9.52 〈3/8〉	—	50m or less	|B−C| = |B−D| = |C−D| = 8m or less	H = 40m or less	h = 1m or less	15 or less
200 (8Hp)	Φ25.4 〈1〉		Φ12.7 〈1/2〉		A + B = A + C = A + D = 50m or less	70m or less				
250 (10Hp)	Φ28.6 〈1-1/8〉									

■**For R410A Power Inverter models** 〈Table 2-2〉

Outdoor unit capacity	Pipe size (mm)				Actual pipe length (m)			Height Difference (m)		Note 1 Number of bends
	Gas pipe side		Liquid pipe side		Indoor-Outdoor	A+B+C+D=	Indoor-Indoor	Indoor-Outdoor	Indoor-Indoor	
	Outdoor unit side	Indoor unit side	Outdoor unit side	Indoor unit side						
140 (6Hp)	Φ15.88 〈5/8〉	Φ12.7 〈1/2〉	Φ9.52 〈3/8〉	Φ6.35 〈1/4〉	—	75m or less	|B−C| = 8m or less	H = 30m or less	h = 1m or less	15 or less
200 (8Hp)	Φ25.4 〈1〉	Φ15.88 〈5/8〉		Φ9.52 〈3/8〉	A + B = A + C = A + D = 80m or less	80m or less		H = 40m or less		
250 (10Hp)	Φ28.6 〈1-1/8〉		Φ12.7 〈1/2〉							

〈Fig. 1〉

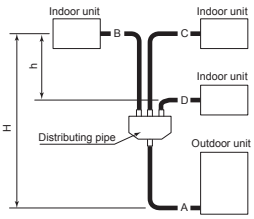

Note 1: Limit the number of bends for refrigerant pipes to 8 in each of the 〈A+B〉, 〈A+C〉 and 〈A+D〉 ranges.
※See the installation manual provided with the main unit for details on charge-less pipe length and refrigerant additional charge amount.

Pipe connections

1. Perform work, taking care with the following:
   ・Be sure to check the combination pattern of indoor and outdoor units, joints to be used 〈Table 3〉, pipe size 〈Table 1〉 and joint used ⑪.
   ・Be sure to observe the limits to refrigerant pipe length and number of bends 〈Table 2〉.
   ・Insert the refrigerant pipe (procured at local site) and joint ⑪ into the expanded pipe portions of distributing pipe (this product) until they stop, and then connect them using anti-oxidization soldering.
   ・There is no restriction on the orientation of distributing pipe (this product)during installation.
   ・Take care that no foreign object, such as dust, enters during pipe connecting work.
   ・Remove the tag of liquid pipe ③ after checking it.
2. Pipe connections
   ・The provided joints ⑪ will be necessary depending on the capability of model used: See 〈Table 3〉, and connect the refrigerant piping.
   ・Do not bend or widen the distributing pipe (liquid pipe).

Combination pattern of indoor and outdoor units and joints to be used:

■For R407C fixed speed 〈Table 3-1〉

Outdoor unit	Indoor unit	Joint to be used
140 (6Hp)	50+50+50 (2+2+2)	Ⓓ Outer Φ25.4−inner Φ19.05〔outdoor gas pipe side〕×1, Ⓒ outer φ15.88−inner φ12.7×3〔indoor gas pipe side〕
200 (8Hp)	60+60+60 (2.5+2.5+2.5)	Ⓑ Outer Φ9.52−inner Φ12.7〔indoor gas pipe side〕×3
250 (10Hp)	71+71+71 (3+3+3)	Ⓕ Outer Φ25.4−inner Φ28.6〔outdoor gas pipe side〕×1

■For R410A Power Inverter 〈Table 3-2〉

Outdoor unit	Indoor unit	Joint to be used
140 (6Hp)	50+50+50 (2+2+2)	Ⓔ Outer Φ25.4−inner Φ15.88〔outdoor gas pipe side〕×1, Ⓒ outer Φ15.88−inner Φ12.7〔indoor gas pipe side〕×3, Ⓐ outer φ9.52−inner Φ6.35〔indoor gas pipe side〕×3,
200 (8Hp)	60+60+60 (2.5+2.5+2.5)	No Joint is necessary
250 (10Hp)	71+71+71 (3+3+3)	Ⓑ Outer Φ9.52−inner Φ12.7〔outdoor liquid pipe side〕×1, Ⓕ outer Φ25.4−inner Φ28.6〔outdoor gas pipe side〕×1

※Installation positions in brackets 〔 〕.

Heat insulation work

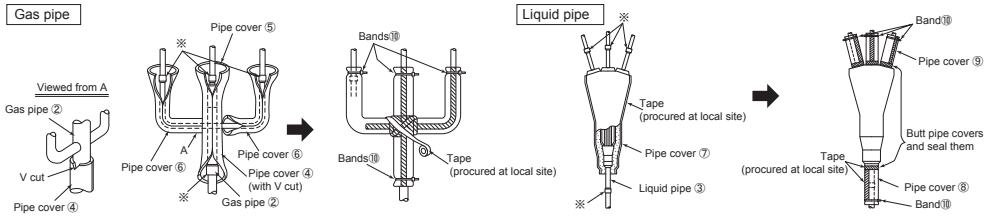

(1) Wind pipe covers ④, ⑤ and ⑥ round gas pipe ② so that there is no gap. Securely fit the V-cut portions of pipe cover ④ into the roots of pipe on both sides to install the pipe cover.

(2) Completely seal the openings of pipe covers ④, ⑤ and ⑥ using heat insulation seal tape (procured at local site). Wind seal tape round the pipe crossing portion in a crossed way so that there is no gap.

(3) Use band ⑩ to tighten the ends of each pipe cover.

(1) Fit liquid pipe ③ into 2 pipe covers ⑦, and then seal the mated portion of pipe covers ⑦ using heat insulation seal tape (procured at local site).

(2) Fit pipe covers ⑧ and ⑨ onto liquid pipe ③, and then securely seal the mated portion of pipe covers ⑦ using heat insulation seal tape (procured at local site).

(3) Use band ⑩ to tighten the ends of each pipe cover.

Notes:
1. Cut off any surplus pipe cover to make appropriate length.
2. Use pipe covers to completely cover the connection portions of refrigerant pipe (procured at local site), gas pipe ② and liquid pipe ③.
3. Cover the entire refrigerant pipe (procured at local site) with heat insulation material. When using generally available heat insulation material, make sure it is heat-resistant insulation material (at least 12 mm thick).

Please install contents other than this description on the main part of a product with an attached installation description, and use them as it.

Distribution Pipe

MSDF-1111R-E

Photo

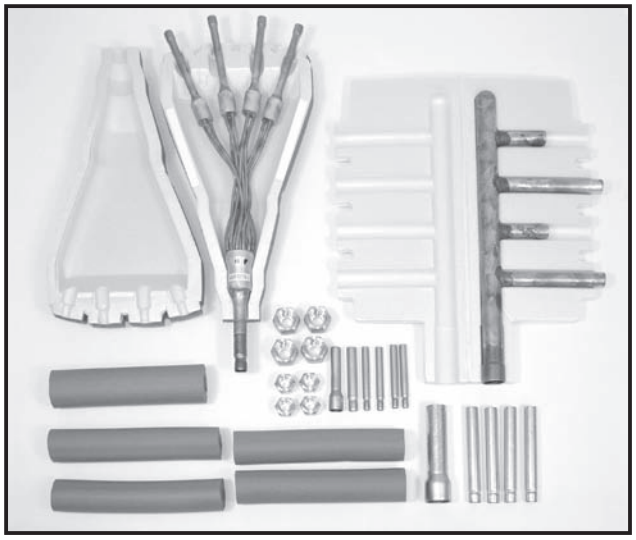

Descriptions

4-branch pipe for Multi-System Quadruple use.(25:25:25:25)

Applicable Models

- PUHZ-P200/250
- PUHZ-RP200/250
  for 25:25:25:25 Quadruple use

Specifications

Main body	Distribution ratio	Outdoor unit capacity is divided into four (25:25:25:25)
	Number of distribution pipes	1 each for liquid pipe and gas pipe
	Pipe material	Phosphate deoxidized copper C1220T-OL (JIS H3300)
Accessory	Pipe cover	Polyethylene foam molding (for liquid pipe) EPT sponge rubber type (for gas pipe)
	Joint	11 joints (5 types)
	Band	7 bands

Dimensions

Unit : mm

LIQUID PIPE

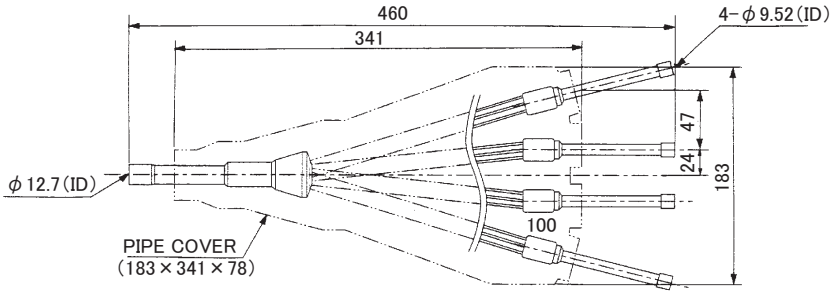

GAS PIPE

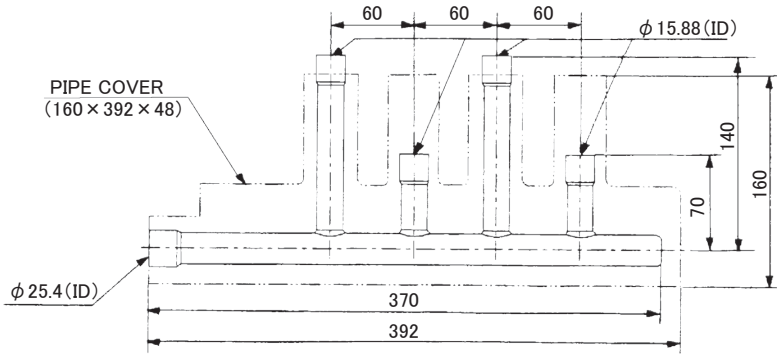

JOINT(Accessory)

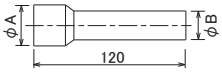

ΦA(ID)	ΦB(OD)	Amount
28.6	25.4	1
15.88	12.7	1

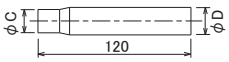

ΦC(ID)	ΦD(OD)	Amount
12.7	15.88	4
6.35	9.52	4
9.52	12.7	1

How to Use / How to Install

Package Air-conditioner Optional Parts Instruction Sheet for Simultaneous Quadruple Distributing Pipe exclusively used with Free Compo Multi-Units

Model MSDF-1111R-E 〔Indoor unit(quadruple)With same-capacity 25:25:25:25〕 ····· Outdoor unit PUH-P8～10, 200～250MYA type (R407C fixed speed)
Outdoor unit PUHZ-RP8～10, 200～250HA type (R410A power inverter)

Make sure that you have all the following parts in packing box before beginning installation:

① Installation manual	② Gas pipe	③ Liquid pipe	④ Pipe cover (gas pipe)	⑤ Pipe covers (liquid pipe)	⑥⑦ Pipe cover	⑧ Band	⑨ Joint	⑩ Flare nut
This sheet 1 sheet	1pc	1pc	1pc	2pcs	⑥OD. Φ42×180L－1pc ⑦Φ38×200L－4pcs	7pcs	Φ9.52→Φ6.35····· 4pcs Φ12.7→Φ9.52····· 1pcs Φ12.7→Φ15.88···· 1pcs Φ15.88→Φ12.7···· 4pcs Φ25.4→Φ28.6·····1pcs	1/4F·····4pcs 1/2F·····4pcs For R410A indoor unit.

● **the gas pipe ② and liquid pipe ③ are specified as shown below.**

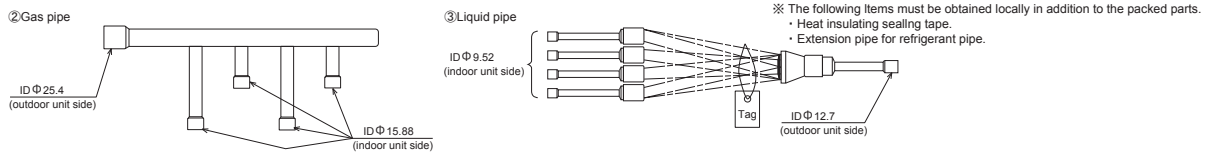

※ The following Items must be obtained locally in addition to the packed parts.
・Heat insulating sealing tape.
・Extension pipe for refrigerant pipe.

Pipe size and refrigerant pipe limits.

■**For R407C fixed speed models** 〈**Table 1-1**〉

Outdoor unit capacity	Pipe size (mm)				Actual pipe length (m)			Height Difference (m)		Note 1 Number of bends
	Gas pipe side		Liquid pipe side		Indoor-Outdoor	A+B+C+D=	Indoor-Indoor	Indoor-Outdoor	Indoor-Indoor	
	Outdoor unit side	Indoor unit side	Outdoor unit side	Indoor unit side						
200 (8Hp)	Φ25.4 〈1〉	Φ15.88 〈5/8〉	Φ12.7 〈1/2〉	Φ9.52 〈3/8〉	A + B = A + C = A + D = A + E = 50m or less	70m or less	|B－C| = |B－D| = |B－E| = |C－D| = |C－E| = |D－E| = 8m or less	H = 40m or less	h = 1m or less	15 or less
250 (10Hp)	Φ28.6 〈1-1/8〉									

■**For R410A Power Inverter models** 〈**Table 1-2**〉

Outdoor unit capacity	Pipe size (mm)				Actual pipe length (m)			Height Difference (m)		Note 1 Number of bends
	Gas pipe side		Liquid pipe side		Indoor-Outdoor	A+B+C+D=	Indoor-Indoor	Indoor-Outdoor	Indoor-Indoor	
	Outdoor unit side	Indoor unit side	Outdoor unit side	Indoor unit side						
200 (8Hp)	Φ25.4 〈1〉	Φ12.7 〈1/2〉	Φ9.52 〈3/8〉	Φ6.35 〈1/4〉	A + B = A + C = A + D = A + E = 80m or less	80m or less	|B－C| = |B－D| = |B－E| = |C－D| = |C－E| = |D－E| = 8m or less	H = 40m or less	h = 1m or less	15 or less
250 (10Hp)	Φ28.6 〈1-1/8〉	Φ15.88 〈5/8〉	Φ12.7 〈1/2〉	Φ9.52 〈3/8〉						

Note 1: The number of bends in the refrigerant pipes is respectlvely 8 or less in the range of 〈A＋B〉〈A＋C〉〈A＋D〉〈A＋E〉.

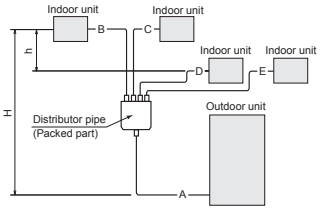

Pipe connections

1. Perform work, taking care with the following:
   - Be sure to check the combination pattern of indoor and outdoor units, joints to be used 〈Table 2〉, pipe size and joint used ⑨.
   - Be sure to observe the limits to refrigerant pipe length and number of bends 〈Table 1〉.
   - Insert the refrigerant pipe (procured at local site) and joint ⑨ into the expanded pipe portions of distributing pipe (this product) until they stop, and then connect them using anti-oxidization soldering.
   - There is no restriction on the orientation of distributing pipe (this product)during installation.
   - Take care that no foreign object, such as dust, enters during pipe connecting work.
   - Remove the tag of liquid pipe ③ after checking it.
2. Pipe connections
   - The provided joints ⑨ will be necessary depending on the capability of model used: See 〈Table 2〉, and connect the refrigerant piping.
   - Do not bend or widen the distributing pipe (liquid pipe).

Combination pattern of indoor and outdoor units and joints to be used:

■**For R407C fixed speed** 〈**Table 2-1**〉

Outdoor unit	Indoor unit	Joint to be used
200 (8Hp)	50+50+50+50 (2+2+2+2)	No Joint is necessary
250 (10Hp)	60+60+60+60 (2.5+2.5+2.5+2.5)	OuterΦ25.4－innerΦ28.6〔outdoor gas pipe side〕×1

■**For R410A Power Inverter** 〈**Table 2-2**〉

Outdoor unit	Indoor unit	Joint to be used
200 (8Hp)	50+50+50+50 (2+2+2+2)	OuterΦ15.88－innerΦ12.7〔indoor gas pipe side〕×4, Outerφ9.52－innerΦ6.35〔indoor liquid pipe side〕×4, OuterΦ12.7－innerΦ9.52〔outdoor gas pipe side〕×1.
250 (10Hp)	60+60+60+60 (2.5+2.5+2.5+2.5)	OuterΦ25.4－innerΦ28.6〔outdoor gas pipe side〕×1

Heat insulation work

Gas pipe

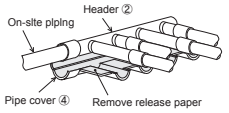

(1) After assembling header ② into pipe cover ④ remove the release paper from inside pipe cover ④ and wrap header ② with pipe cover ④.

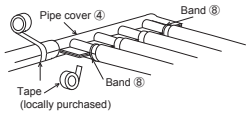

(2) Clamp both ends of the Indoor branch connection of pipe cover ④ with band ⑧ as shown above. Cut off the excess length of the band.
(3) Tightly seal the joints of the pipe cover with tape (locally purchased).(Incomplete sealing can result in dew condensation.)

Liquid pipe

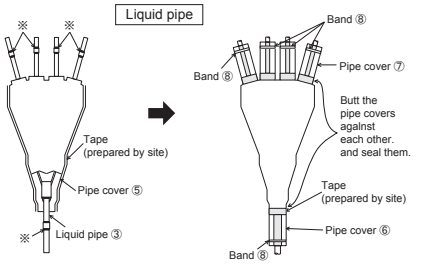

(1) Install the liquid pipe ③ while aligning it with the pipe cover ⑤ (2 pcs).Seal the joint ares of the pipe cover ⑤ with hest Insulating sealing tape (obtalnlocally).

(1) As shown above, install the liquid pipe ③ on the pipe cover ⑧ and ⑦, and securely seal with heat Insulating seal- ing tape (obtain locally).
(3) Fasten the end of each pipe cover with band ⑧

Notes:
1. Cut the excesslve part of each pipe cover
2. Securely cover the joint areas (※) of the refrigerant pipe (obtained locally) to the gas pipes ② and llquid pipe ③ with the pipe covers.
3. Cover the entire refrigerant pipe (obtained locally) with heat insulating materal.if commercial heat insulating material is used, it must be 12mm or thicker.

OPTIONAL PARTS

Please install contents other than this description on the main part of a product with an attached installation description, and use them as it.

Photo

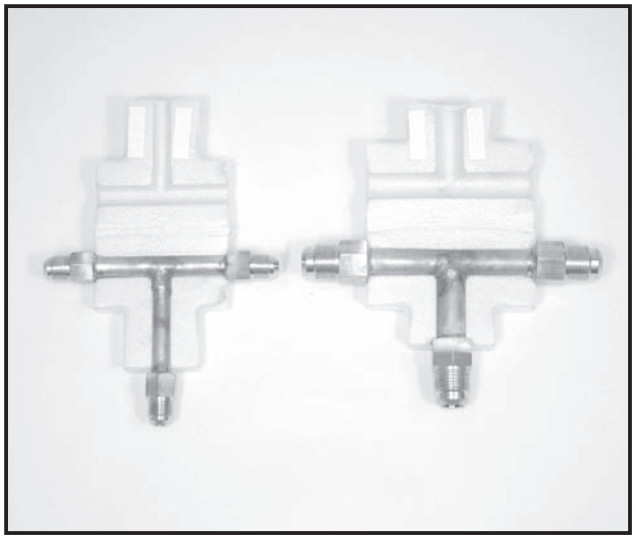

Descriptions

For double-branching of the refrigerant piping to connect 2 branch boxes. (Flare connection type)

Applicable Models

- MXZ-8A140VA
- PAC-AK30BC
- PAC-AK50BC

Dimensions

Unit : mm

LIQUID PIPE

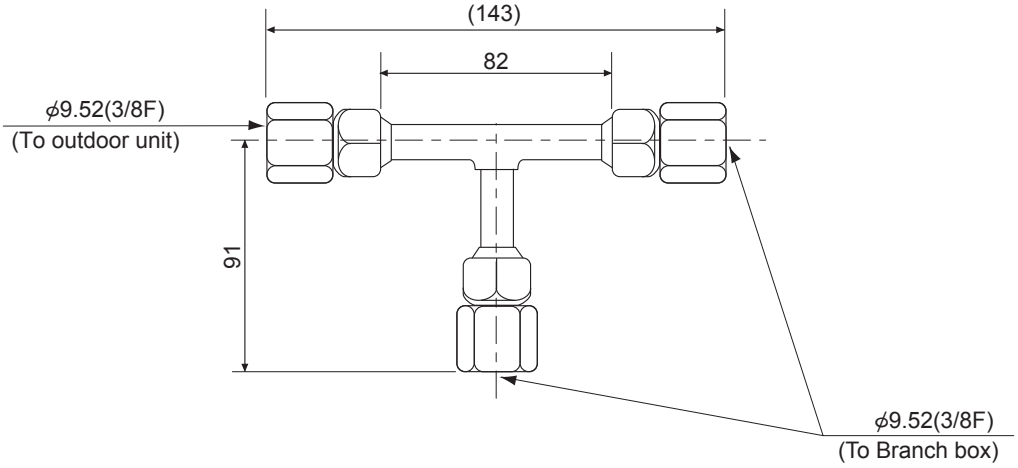

GAS PIPE

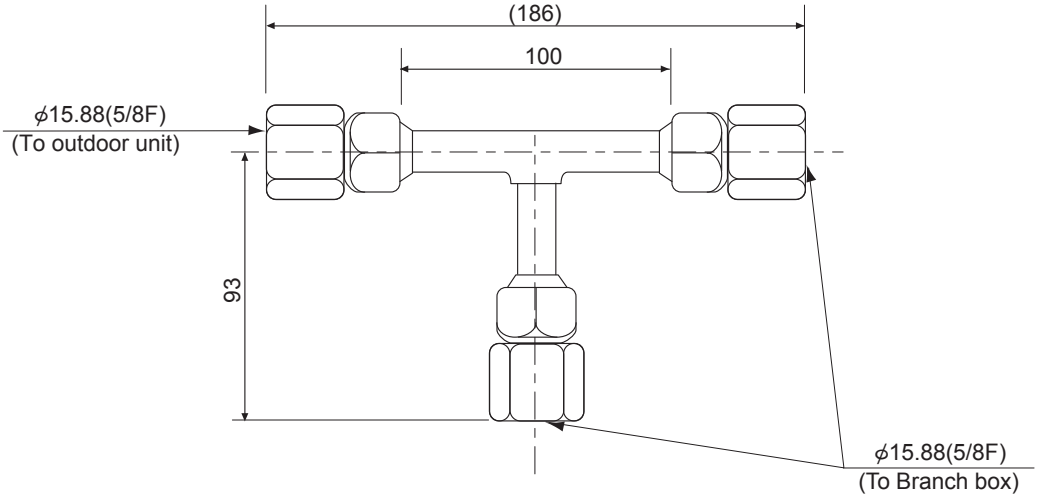

How to Use / How to Install

2--BRANCH PIPE(JOINT) (MSDD--50AR--E)

※In case of 2 branch box connection for flare connection

Applicable model
MXZ-8A140VA(R410A type) PAC-AK50BC PAC-AK30BC

Note:Besides these, please procure the following locally:
(1)Tape for sealing the heat insulation covers.
(2)Extension pipes for the refrigerant system.

The kit contains followings

① Manual	② Liquid pipe (small: ϕ9.52)	③ Gas pipe (large: ϕ15.88)	④ Heat-insulation cover(small)	⑤ Heat-insulation cover(large)
This one-sheet manual	X1	X1	X1	X1

During installation, be careful about the followings

1. Note the limit length of the refrigerant pipe refer to the installation manual of outdoor unit and branch box.
2. Note the limits for installing the indoor units refer to the installation manual of outdoor unit and branch box.
3. In connecting pipes, take care not to let any dirt or other foreign matter enter any pipe.
4. Put a heat insulato into every refrigerant pipe.

Outline of system and pipe size

Outdoor unit 2branches pipe(joint):optional part explained by this manual

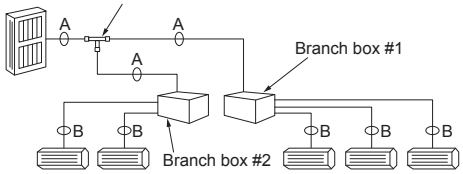

	A	B
Liquid(mm)	ϕ9.52	Refer to installation manual of outdoor unit and branch box
Gas(mm)	ϕ15.88	

See the following for the specifications of liquid pipe, and gas pipe

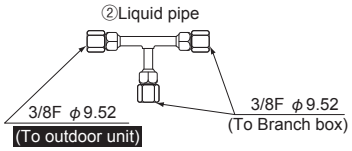

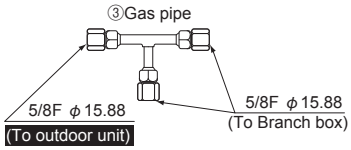

〈Prohibition〉

Please do not make the following connection.

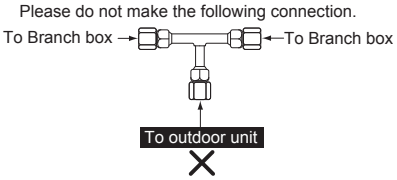

Installing the refrigerrant piping

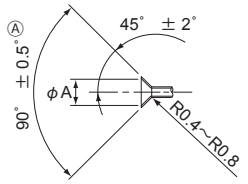

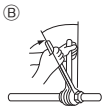

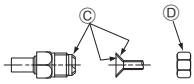

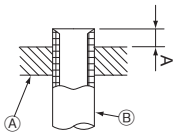

ⒶDie
ⒷCopper pipe

- When bending the pipes, be careful not to break them.Bend radii of 100mm to 150mm are sufficient.
- Make sure the pipes do not contact the compressor. Abnormal noise or vibration may reuslt.

- Pipes must be connected starting from the indoor unit. Flare unts must be tightened with a torgus wrench.
- Flare the liguid pipes and gas pipes and apply a thin layer of refringeration oil (Applied on site).
- When usual pipe seaaling is used, refer to Table 1 for flaring of R410A refrigerant pipes. The size adjustment gauge can be used to confirm A measurements.

Ⓐ Flare cutting dimensions
Ⓑ Flare nut tighening torgue

Ⓐ

Copper pipe O.D. (mm)	Flare dimensions ϕA dimensions (mm)
ϕ9.52	12.8-13.2
ϕ15.88	19.3-19.7

Ⓑ

Copper pipe O.D. (mm)	Flare nut O.D. (mm)	Tightening torque (N・m)★
ϕ9.52	22	34-32
ϕ15.88	29	68-82

Table 1

Copper pipe O.D. (mm)	A (mm)	
	Flare tool for R410A	Flare tool for R22-R407C
	Clutch type	
ϕ9.52(3/8″)	0-0.5	1.0-1.5
ϕ15.88(5/8″)	0-0.5	1.0-1.5

Installation direction of joint

Horizontal direction

Vertical direction

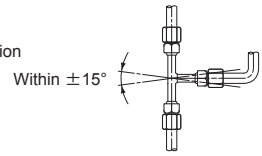

Installing Heat Insulation Cover and Heat Insulators

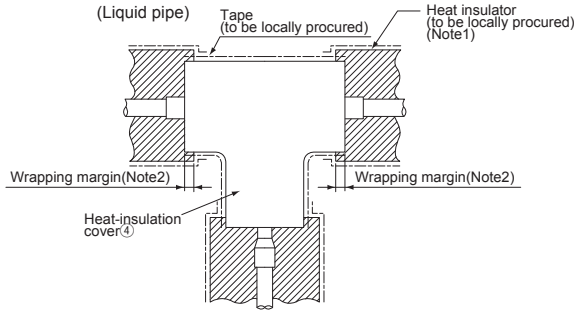

- The liquid pipe (small: ϕ9.52) Make it fit the heat-insulation cover(small). Seal the mating of the heat-insulation cover with the tape for sealing heat insulators (to be locally procured).

- Do the same with the gas pipe (large: ϕ15.88),using the heat-insulation cover (large), as with the liquid pipe (small).

Note 1 : Install a heat insulator on every part of the refrigerant pipes (to be locally procured).
If you want to use commercially-available heat insulators,use heat-resistant heat insulators (at least 12mm thick).

Note 2 : The pipe covers shrink a little under high heat.
Therefore, allow for some wrapping margin in the heat insulators.

OPTIONAL PARTS

Photo

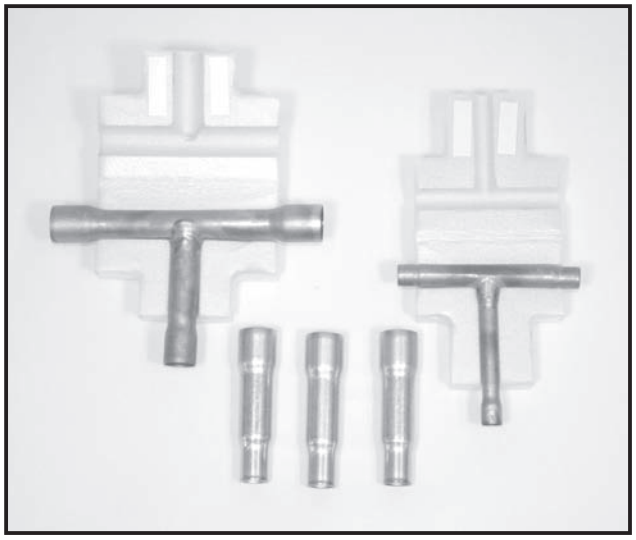

Descriptions

For double-branching of the refrigerant piping to connect 2 branch boxes. (Brazing type)

Applicable Models

- MXZ-8A140VA
- PAC-AK30BC
- PAC-AK50BC

Dimensions

Unit : mm

LIQUID PIPE

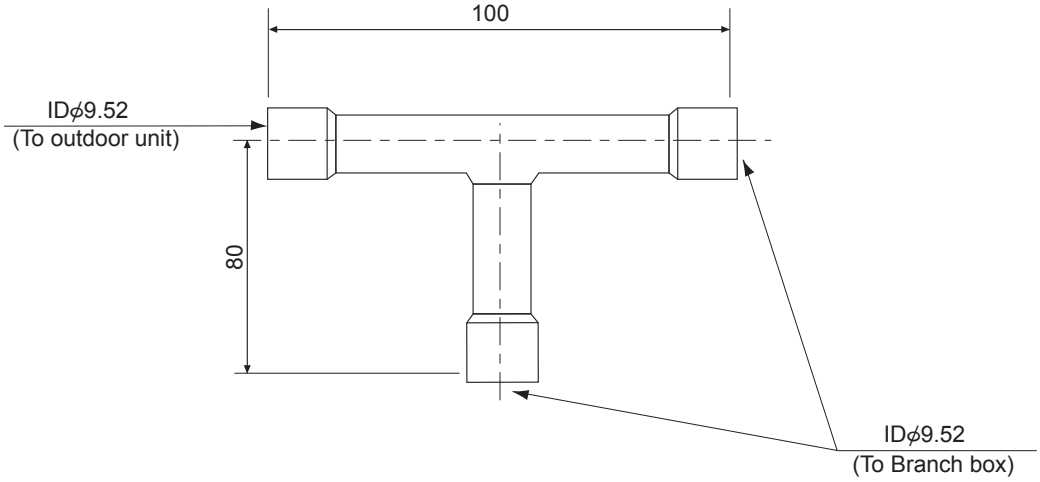

GAS PIPE

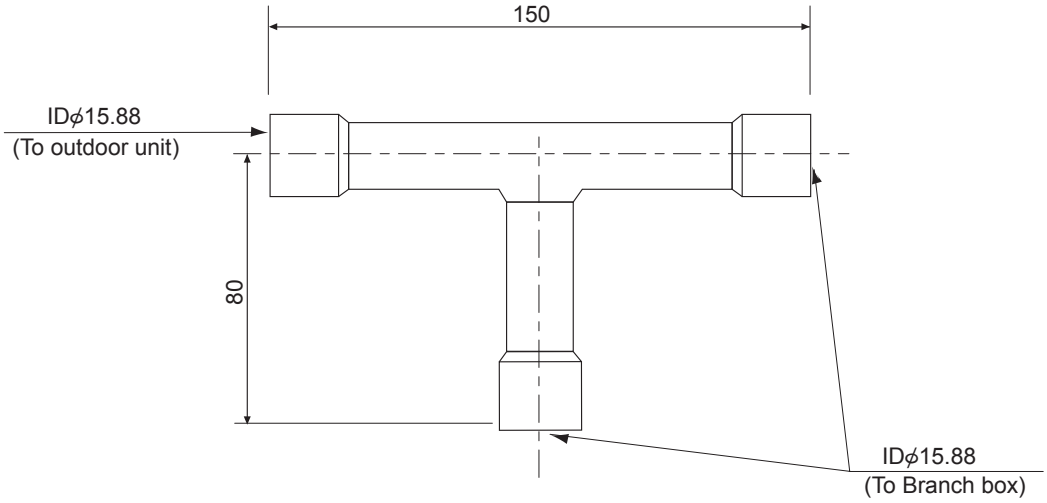

How to Use / How to Install

2-BRANCH PIPE(JOINT) (MSDD-50BR-E)

※In case of 2 branch box connection for welding

Applicable model
MXZ-8A140VA(R410A type)

The kit contains followings

① Manual	② Liquid pipe (small: ϕ9.52)	③ Gas pipe (large: ϕ15.88)	④ Heat-insulation cover(small)	⑤ Heat-insulation cover(large)	⑥ Pipe (Gas pipe use: ϕ15.88→ϕ19.05)
This one-sheet manual	X1	X1	X1	X1	X3

Note:Besides these, please procure the following locally:
(1)Tape for sealing the heat insulation covers.
(2)Extension pipes for the refrigerant system.

During installation, be careful about the followings

1. Note the limit length of the refrigerant pipe refer to the installation manual of outdoor unit and branch box.
2. Note the limits for installing the indoor units refer to the installation manual of outdoor unit and branch box.
3. Us solder in connecting any branch joint with any piping system or with the pipe. Insoldering, use oxygen-free solder.
4. Each branch joint has a stopper.
   In connecting any pipe to any branch joint, thrust the pipe home till it ocks.
5. In connecting pipes, take care not to let any dirt or other oreign matter enter any pipe.
6. Put a heat insulator into every refrigerant pipe.

Outline of system and pipe size

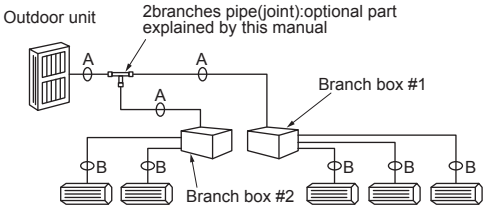

Outdoor unit:R410A type (MXZ-8A140VA)

	A	B
Liquid(mm)	ϕ9.52	Refer to installation manual of outdoor unit and branch box
Gas(mm)	ϕ15.88	

See the following for the specifications of liquid pipe, and gas pipe

When outdoor unit is R22 type (MXZ-7A140VC), please connect three pipe⑥ to Gas pipe③ according to Fig.1.

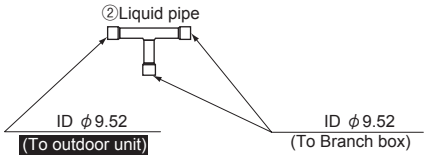

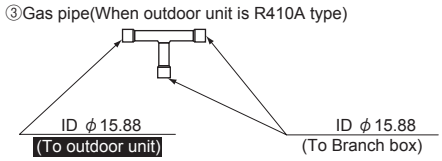

〈Prohibition〉

Please do not make the following connection.

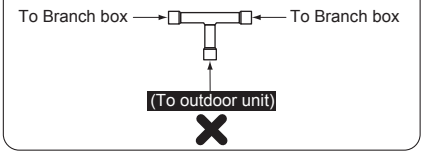

Installation direction of joint

Horizontal direction

Vertical direction

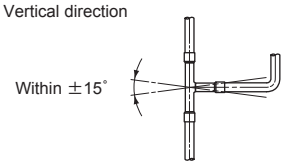

Installing Heat Insulation Cover and Heat Insulators

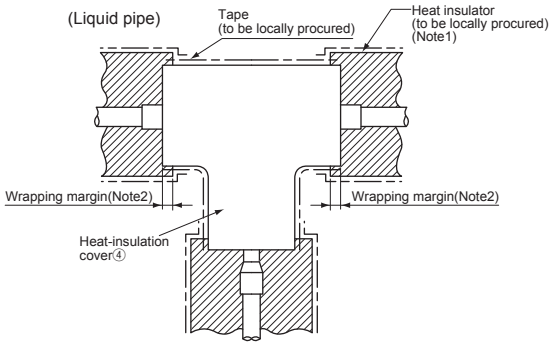

- The liquid pipe (small) Make it fit the heat-insulation cover (small) . Seal the mating of the heat-insulation cover with the tape for sealing heat insulators(to be locally procured).
- Do the same with the gas pipe(large), using the heat-insulation cover (large), as with the liquid pipe (small).

Note 1 : Install a heat insulator on every part of the refrigerant pipes (to be locally procured).
If you want to use commercially-available heat insulators, use heat-resistant heat insulators(at least 12mm thick).

Note 2 : The pipe covers shrink a little under high heat.
Therefore, allow for some wrapping margin in the heat insulators.

Joint Pipe Unit ϕ6.35 → Pipe ϕ9.52

PAC-SG72RJ-E

Photo

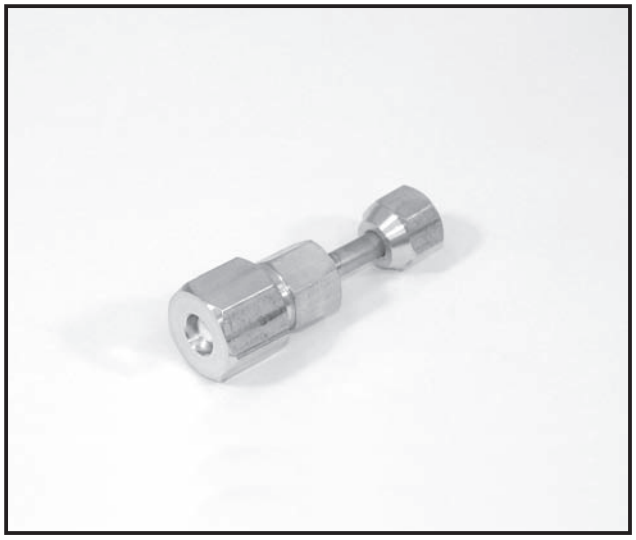

Descriptions

A part to connect refrigerant pipes of the different diameter. (Unit ϕ6.35 → ϕ9.52)

Applicable Models

- PUHZ-RP
- PUHZ-P
- PUHZ-HRP

Specifications

Pipe diameter	Φ 6.35
Pipe material	C 1220T - OL

Dimensions

Unit : mm (inch)

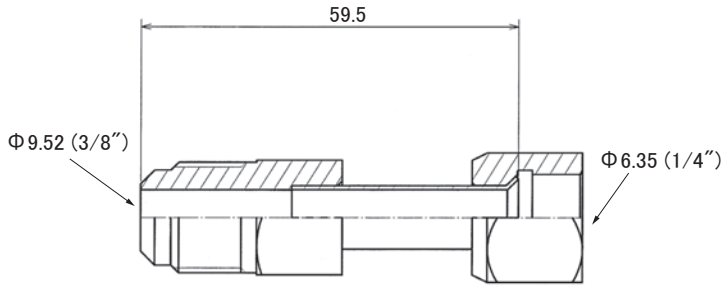

How to Use / How to Install

Make sure that you have all the following parts, in addition to this manual in this box:

Joint Pipe
- PAC-SG72RJ-E (unit side: Φ6.35 diameter, onsite pipe side: Φ9.52 diameter)
- PAC-SG73RJ-E (unit side: Φ9.52 diameter, onsite pipe side: Φ12.70 diameter)
- PAC-SG74RJ-E (unit side: Φ12.70 diameter, onsite pipe side: Φ15.88 diameter)
- PAC-SG75RJ-E (unit side: Φ15.88 diameter, onsite pipe side: Φ19.05 diameter)

Unit side 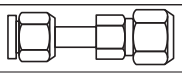 Onsite piping side

Installation procedure
(carefully read the following before installing.)
This optional part is used to connect indoor/outdoor unit to onsite pipes of different diameters.
※ When installing this optional part, be sure to read "Refrigerant pipe connection" in the installation manual attached to outdoor unit.

1) Apply flare processing to onsite pipes to adapt to R410A, according to the table on the right.Use optional accessory flare nut at this time.
※ Check the installation manual attached to the outdoor unit for advisability on whether or not onsite (existing) pipes can be used.
※ When pipe of 19.05 diameter is used, be sure to turn ON the SW8-1 on outdoor unit control board.

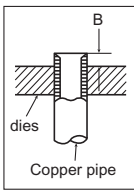

Pipe diameter (mm)	B size (mm)	
	R410A flare tool	R22/R407C flare tool
	Clutch type	
ϕ 6.35(1/4")	0~0.5	1.0~1.5
ϕ 9.52(3/8")	0~0.5	1.0~1.5
ϕ12.70(1/2")	0~0.5	1.0~1.5
ϕ15.88(5/8")	0~0.5	1.0~1.5
ϕ19.05(3/4")	0~0.5	1.0~1.5

※ When flare processing for refrigerant R410A is applied using current tool, refer to the table above. B size can be secured using copper pipe gauge for margin adjustment.

Outer diameter of copper pipe (mm)	Processing size of flare section (mm)	Flare shape
ϕ6.35	8.7~9.1	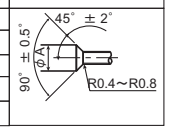
ϕ9.52	12.8~13.2	
ϕ12.70	16.2~16.6	
ϕ15.88	19.3~19.7	
ϕ19.05	23.6~24.0	

2) Remove caps (both ends) for protection against mixing of foreign materials from optional part, and thinly apply refrigerat or oil (locally procured) on flare surface.

Refrigerator oil application point

Apply refrigerator oil to entire circumference of flare sheet surface.

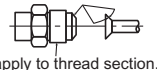

※ Do not apply to thread section. (If applied to threads, flare nut can easily be loosened.)

3) Securely tighten flare nut using torque wrench according to the table on the right.

〈Proper tightening torque using torque wrench〉

Outer diameter of copper pipe (mm)	Tightening torque N・m (kgf・cm)
ϕ6.35	14~18(140~180)
ϕ9.52	34~42(340~420)
ϕ12.70	49~61(490~610)
ϕ15.88	68~82(680~820)
ϕ19.05	100~120(1000~1200)

4) After refrigerant pipe is connected, be sure to perform gas leakage inspection for onsite connection pipes (including this optional part) and indoor/outdoor unit.

5) Heat insulation is necessary for this optional part: Wrap heat insulator (locally procured) around the onsite pipes and also the optional part (for dewdrop dripping prevention).

6) Perform test run according to the installation manual of the unit, making sure to also perform operation check.

Joint Pipe Unit ϕ9.52 → Pipe ϕ12.7

PAC-SG73RJ-E

Photo

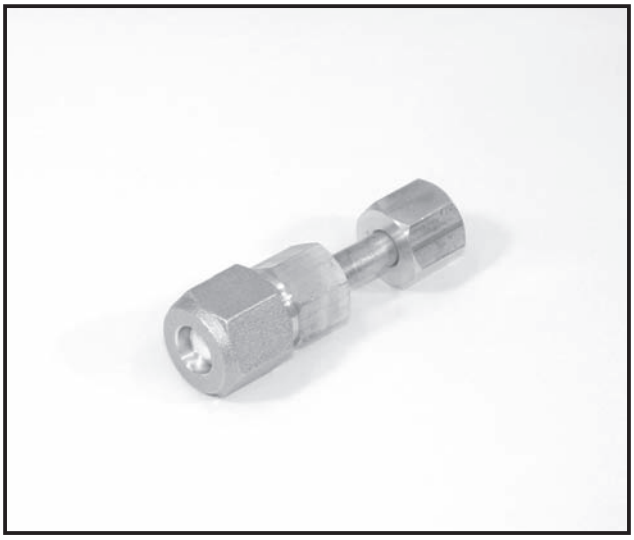

Descriptions

A part to connect refrigerant pipes of the different diameter.
(Unit ϕ9.52 → ϕ12.7)

Applicable Models

- PUHZ-RP
- PUHZ-P
- PUHZ-HRP

Specifications

Pipe diameter	Φ 9.52
Pipe material	C 1220T - OL

Dimensions

Unit : mm (inch)

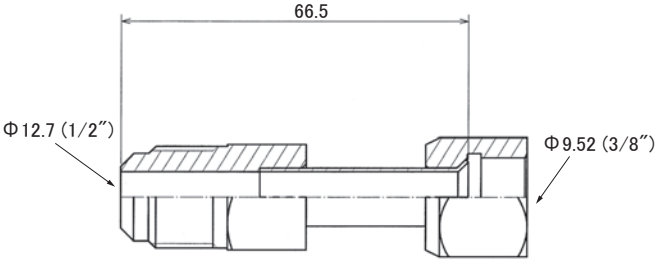

How to Use / How to Install

Make sure that you have all the following parts, in addition to this manual in this box:

Joint Pipe
PAC-SG72RJ-E (unit side: Φ6.35 diameter, onsite pipe side: Φ9.52 diameter)
PAC-SG73RJ-E (unit side: Φ9.52 diameter, onsite pipe side: Φ12.70 diameter)
PAC-SG74RJ-E (unit side: Φ12.70 diameter, onsite pipe side: Φ15.88 diameter)
PAC-SG75RJ-E (unit side: Φ15.88 diameter, onsite pipe side: Φ19.05 diameter)

Unit side 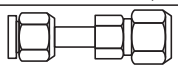 Onsite piping side

Installation procedure
(carefully read the following before installing.)
This optional part is used to connect indoor/outdoor unit to onsite pipes of different diameters.
※ When installing this optional part, be sure to read "Refrigerant pipe connection" in the installation manual attached to outdoor unit.

1) Apply flare processing to onsite pipes to adapt to R410A, according to the table on the right.Use optional accessory flare nut at this time.
※ Check the installation manual attached to the outdoor unit for advisability on whether or not onsite (existing) pipes can be used.
※ When pipe of 19.05 diameter is used, be sure to turn ON the SW8-1 on outdoor unit control board.

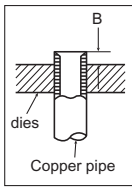

Pipe diameter (mm)	B size (mm)	
	R410A flare tool	R22/R407C flare tool
	Clutch type	
ϕ 6.35(1/4")	0~0.5	1.0~1.5
ϕ 9.52(3/8")	0~0.5	1.0~1.5
ϕ12.70(1/2")	0~0.5	1.0~1.5
ϕ15.88(5/8")	0~0.5	1.0~1.5
ϕ19.05(3/4")	0~0.5	1.0~1.5

※When flare processing for refrigerant R410A is applied using current tool, refer to the table above. B size can be secured using copper pipe gauge for margin adjustment.

Outer diameter of copper pipe (mm)	Processing size of flare section (mm)	Flare shape
ϕ6.35	8.7~9.1	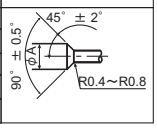
ϕ9.52	12.8~13.2	
ϕ12.70	16.2~16.6	
ϕ15.88	19.3~19.7	
ϕ19.05	23.6~24.0	

2) Remove caps (both ends) for protection against mixing of foreign materials from optional part, and thinly apply refrigerat or oil (locally procured) on flare surface.

Refrigerator oil application point
Apply refrigerator oil to entire circumference of flare sheet surface. 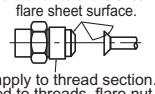 ※ Do not apply to thread section. (If applied to threads, flare nut can easily be loosened.)

3) Securely tighten flare nut using torque wrench according to the table on the right.

〈Proper tightening torque using torque wrench〉

Outer diameter of copper pipe (mm)	Tightening torque N・m (kgf・cm)
ϕ6.35	14~18(140~180)
ϕ9.52	34~42(340~420)
ϕ12.70	49~61(490~610)
ϕ15.88	68~82(680~820)
ϕ19.05	100~120(1000~1200)

4) After refrigerant pipe is connected, be sure to perform gas leakage inspection for onsite connection pipes (including this optional part) and indoor/outdoor unit.

5) Heat insulation is necessary for this optional part: Wrap heat insulator (locally procured) around the onsite pipes and also the optional part (for dewdrop dripping prevention).

6) Perform test run according to the installation manual of the unit, making sure to also perform operation check.

OPTIONAL PARTS

Joint Pipe Unit ϕ12.7 → Pipe ϕ15.88 PAC-SG74RJ-E

Photo

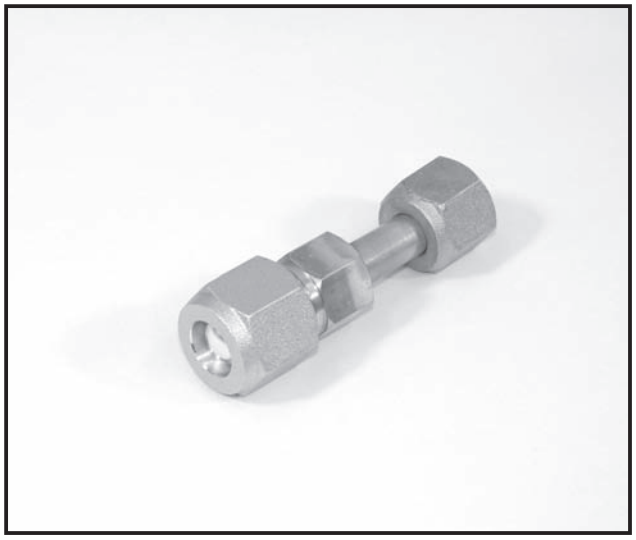

Descriptions

A part to connect refrigerant pipes of the different diameter. (Unit ϕ12.7 → ϕ15.88)

Applicable Models

- PUHZ-RP
- PUHZ-P
- PUHZ-HRP

Specifications

Pipe diameter	Φ 12.7
Pipe material	C 1220T - OL

Dimensions

Unit : mm (inch)

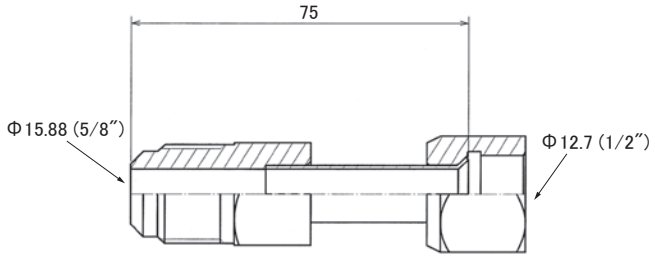

How to Use / How to Install

Make sure that you have all the following parts, in addition to this manual in this box:

Joint Pipe
PAC-SG72RJ-E (unit side: Φ6.35 diameter, onsite pipe side: Φ9.52 diameter)
PAC-SG73RJ-E (unit side: Φ9.52 diameter, onsite pipe side: Φ12.70 diameter)
PAC-SG74RJ-E (unit side: Φ12.70 diameter, onsite pipe side: Φ15.88 diameter)
PAC-SG75RJ-E (unit side: Φ15.88 diameter, onsite pipe side: Φ19.05 diameter)

Unit side 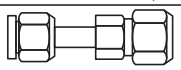 Onsite piping side

Installation procedure
(carefully read the following before installing.)
This optional part is used to connect indoor/outdoor unit to onsite pipes of different diameters.
※ When installing this optional part, be sure to read "Refrigerant pipe connection" in the installation manual attached to outdoor unit.

1) Apply flare processing to onsite pipes to adapt to R410A, according to the table on the right.Use optional accessory flare nut at this time.
※ Check the installation manual attached to the outdoor unit for advisability on whether or not onsite (existing) pipes can be used.
※ When pipe of 19.05 diameter is used, be sure to turn ON the SW8-1 on outdoor unit control board.

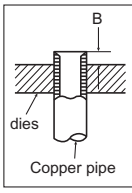

Pipe diameter (mm)	B size (mm)	
	R410A flare tool	R22/R407C flare tool
	Clutch type	
ϕ 6.35(1/4")	0~0.5	1.0~1.5
ϕ 9.52(3/8")	0~0.5	1.0~1.5
ϕ12.70(1/2")	0~0.5	1.0~1.5
ϕ15.88(5/8")	0~0.5	1.0~1.5
ϕ19.05(3/4")	0~0.5	1.0~1.5

※ When flare processing for refrigerant R410A is applied using current tool, refer to the table above. B size can be secured using copper pipe gauge for margin adjustment.

Outer diameter of copper pipe (mm)	Processing size of flare section (mm)	Flare shape
ϕ6.35	8.7~9.1	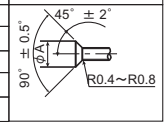
ϕ9.52	12.8~13.2	
ϕ12.70	16.2~16.6	
ϕ15.88	19.3~19.7	
ϕ19.05	23.6~24.0	

2) Remove caps (both ends) for protection against mixing of foreign materials from optional part, and thinly apply refrigerat or oil (locally procured) on flare surface.

Refrigerator oil application point
Apply refrigerator oil to entire circumference of flare sheet surface.

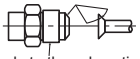

※ Do not apply to thread section.
(If applied to threads, flare nut can easily be loosened.)

3) Securely tighten flare nut using torque wrench according to the table on the right.

〈Proper tightening torque using torque wrench〉

Outer diameter of copper pipe (mm)	Tightening torque N·m (kgf·cm)
ϕ6.35	14~18(140~180)
ϕ9.52	34~42(340~420)
ϕ12.70	49~61(490~610)
ϕ15.88	68~82(680~820)
ϕ19.05	100~120(1000~1200)

4) After refrigerant pipe is connected, be sure to perform gas leakage inspection for onsite connection pipes (including this optional part) and indoor/outdoor unit.

5) Heat insulation is necessary for this optional part: Wrap heat insulator (locally procured) around the onsite pipes and also the optional part (for dewdrop dripping prevention).

6) Perform test run according to the installation manual of the unit, making sure to also perform operation check.

Joint Pipe Unit ϕ15.88 → Pipe ϕ19.05 PAC-SG75RJ-E

Photo

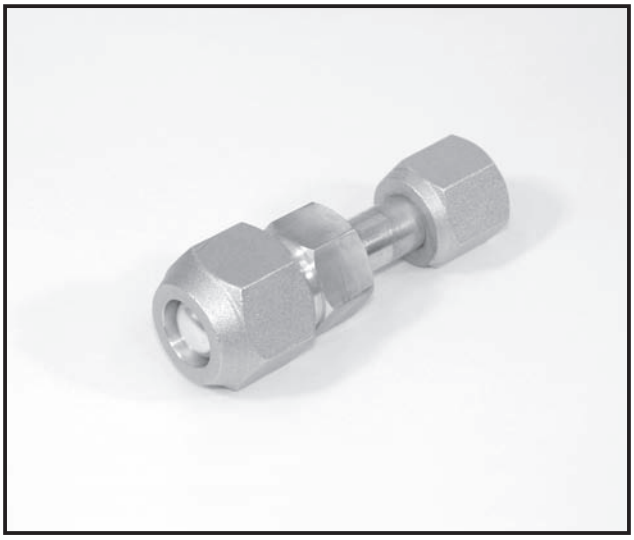

Descriptions

A part to connect refrigerant pipes of the different diameter. (Unit ϕ15.88 → ϕ19.05)

Applicable Models

- PUHZ-RP
- PUHZ-P
- PUHZ-HRP

Specifications

Pipe diameter	Φ 15.88
Pipe material	C 1220T - OL

Dimensions

Unit : mm (inch)

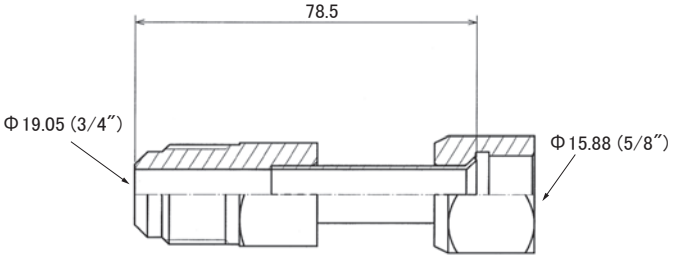

How to Use / How to Install

Make sure that you have all the following parts, in addition to this manual in this box:

Joint Pipe
- PAC-SG72RJ-E (unit side: Φ6.35 diameter, onsite pipe side: Φ9.52 diameter)
- PAC-SG73RJ-E (unit side: Φ9.52 diameter, onsite pipe side: Φ12.70 diameter)
- PAC-SG74RJ-E (unit side: Φ12.70 diameter, onsite pipe side: Φ15.88 diameter)
- PAC-SG75RJ-E (unit side: Φ15.88 diameter, onsite pipe side: Φ19.05 diameter)

Unit side 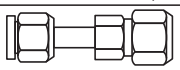 Onsite piping side

Installation procedure
(carefully read the following before installing.)
This optional part is used to connect indoor/outdoor unit to onsite pipes of different diameters.
※ When installing this optional part, be sure to read "Refrigerant pipe connection" in the installation manual attached to outdoor unit.

1) Apply flare processing to onsite pipes to adapt to R410A, according to the table on the right.Use optional accessory flare nut at this time.
※ Check the installation manual attached to the outdoor unit for advisability on whether or not onsite (existing) pipes can be used.
※ When pipe of 19.05 diameter is used, be sure to turn ON the SW8-1 on outdoor unit control board.

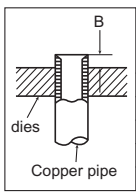

Pipe diameter (mm)	B size (mm)	
	R410A flare tool	R22/R407C flare tool
	Clutch type	
ϕ 6.35(1/4")	0~0.5	1.0~1.5
ϕ 9.52(3/8")	0~0.5	1.0~1.5
ϕ12.70(1/2")	0~0.5	1.0~1.5
ϕ15.88(5/8")	0~0.5	1.0~1.5
ϕ19.05(3/4")	0~0.5	1.0~1.5

※ When flare processing for refrigerant R410A is applied using current tool, refer to the table above. B size can be secured using copper pipe gauge for margin adjustment.

Outer diameter of copper pipe (mm)	Processing size of flare section (mm)	Flare shape
ϕ6.35	8.7~9.1	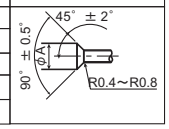
ϕ9.52	12.8~13.2	
ϕ12.70	16.2~16.6	
ϕ15.88	19.3~19.7	
ϕ19.05	23.6~24.0	

2) Remove caps (both ends) for protection against mixing of foreign materials from optional part, and thinly apply refrigerat or oil (locally procured) on flare surface.

Refrigerator oil application point
Apply refrigerator oil to entire circumference of flare sheet surface. 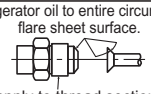 ※ Do not apply to thread section. (If applied to threads, flare nut can easily be loosened.)

3) Securely tighten flare nut using torque wrench according to the table on the right.

〈Proper tightening torque using torque wrench〉

Outer diameter of copper pipe (mm)	Tightening torque N・m (kgf・cm)
ϕ6.35	14~18(140~180)
ϕ9.52	34~42(340~420)
ϕ12.70	49~61(490~610)
ϕ15.88	68~82(680~820)
ϕ19.05	100~120(1000~1200)

4) After refrigerant pipe is connected, be sure to perform gas leakage inspection for onsite connection pipes (including this optional part) and indoor/outdoor unit.

5) Heat insulation is necessary for this optional part: Wrap heat insulator (locally procured) around the onsite pipes and also the optional part (for dewdrop dripping prevention).

6) Perform test run according to the installation manual of the unit, making sure to also perform operation check.

OPTIONAL PARTS

Joint Pipe Unit ϕ9.52 → Pipe ϕ15.88 PAC-SG76RJ-E

Photo

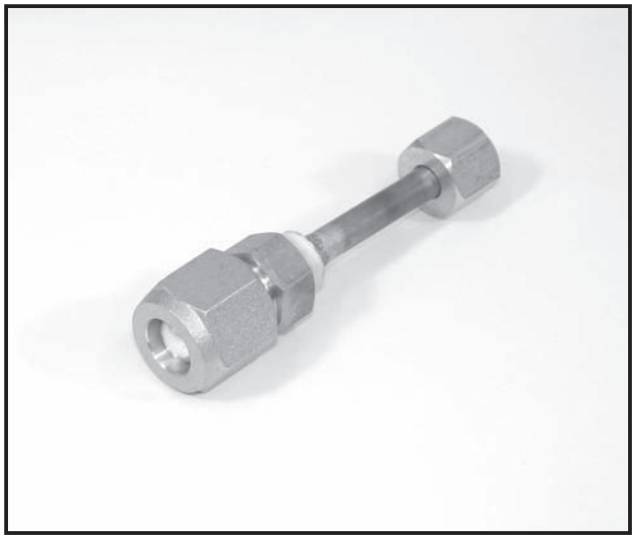

Descriptions

A part to connect refrigerant pipes of the different diameter. (Unit ϕ9.52 → ϕ15.88)

Applicable Models

- MXZ-4A71VA
- MXZ-4A80VA
- MXZ-5A100VA
- MXZ-8A140VA
- PAC-AK30BC
- PAC-AK50BC

Specifications

Pipe diameter	Φ 9.52
Pipe material	C 1220T - OL

Dimensions

Unit : mm (inch)

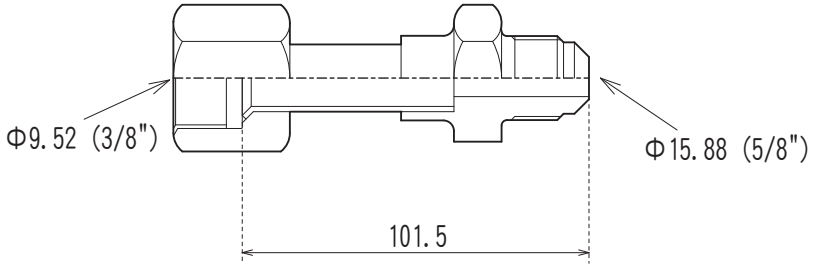

How to Use / How to Install

Make sure that you have all the following parts, in addition to this manual in this box:

Joint Pipe
- PAC-SG76RJ-E (unit side: Φ9.52 diameter, onsite pipe side: Φ15.88 diameter)
- PAC-493PI (unit side: Φ6.32 diameter, onsite pipe side: Φ9.52 diameter)
- MAC-A454JP-E (unit side: Φ9.52 diameter, onsite pipe side: Φ12.7 diameter)
- MAC-A455JP-E (unit side: Φ12.7 diameter, onsite pipe side: Φ9.52 diameter)
- MAC-A456JP-E (unit side: Φ12.7 diameter, onsite pipe side: Φ15.88 diameter)

Unit side 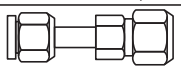 Onsite piping side

Installation procedure
(carefully read the following before installing.)
This optional part is used to connect indoor/outdoor unit to onsite pipes of different diameters.
※ When installing this optional part, be sure to read "Refrigerant pipe connection" in the installation manual attached to outdoor unit.

1) Apply flare processing to onsite pipes to adapt to R410A, according to the table on the right.Use optional accessory flare nut at this time.
※ Check the installation manual attached to the outdoor unit for advisability on whether or not onsite (existing) pipes can be used.

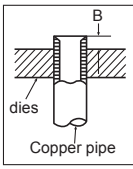

Pipe diameter (mm)	B size (mm)	
	R410A flare tool	R22/R407C flare tool
	Clutch type	
ϕ 6.35 (1/4")	0~0.5	1.0~1.5
ϕ 9.52 (3/8")	0~0.5	1.0~1.5
ϕ 12.70 (1/2")	0~0.5	1.0~1.5
ϕ 15.88 (5/8")	0~0.5	1.0~1.5

※ When flare processing for refrigerant R410A is applied using current tool, refer to the table above. B size can be secured using copper pipe gauge for margin adjustment.

Outer diameter of copper pipe (mm)	Processing size of flare section (mm)	Flare shape
ϕ 6.35	8.7~9.1	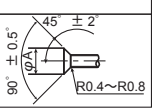
ϕ 9.52	12.8~13.2	
ϕ 12.70	16.2~16.6	
ϕ 15.88	19.3~19.7	

2) Remove caps (both ends) for protection against mixing of foreign materials from optional part, and thinly apply refrigerat or oil (locally procured) on flare surface.

Refrigerator oil application point
Apply refrigerator oil to entire circumference of flare sheet surface. 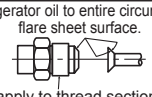 ※ Do not apply to thread section. (If applied to threads, flare nut can easily be loosened.)

3) Securely tighten flare nut using torque wrench according to the table on the right.

〈Proper tightening torque using torque wrench〉

Outer diameter of copper pipe (mm)	Tightening torque N•m (kgf•cm)
ϕ 6.35	14~18 (140~180)
ϕ 9.52	34~42 (340~420)
ϕ 12.70	49~61 (490~610)
ϕ 15.88	68~82 (680~820)

4) After refrigerant pipe is connected, be sure to perform gas leakage inspection for onsite connection pipes (including this optional part) and indoor/outdoor unit.

5) Heat insulation is necessary for this optional part: Wrap heat insulator (locally procured) around the onsite pipes and also the optional part (for dewdrop dripping prevention).

6) Perform test run according to the installation manual of the unit, making sure to also perform operation check.

Joint Pipe Unit ϕ6.35 → Pipe ϕ9.52 PAC-493PI

Photo

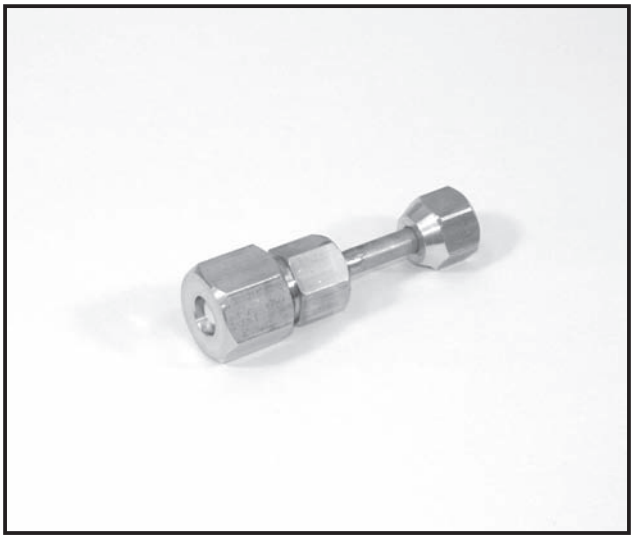

Descriptions

A part to connect refrigerant pipes of the different diameter. (Unit ϕ6.35 → ϕ9.52)

Applicable Models

- MXZ-4A80VA
- MXZ-5A100VA
- MXZ-8A140VA
- PAC-AK30BC
- PAC-AK50BC

Specifications

Pipe diameter	Φ 6.35
Pipe material	C 1220T - OL

Dimensions

Unit : mm (inch)

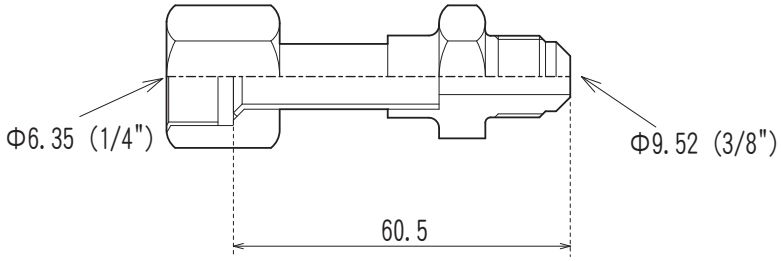

How to Use / How to Install

Make sure that you have all the following parts, in addition to this manual in this box:

Joint Pipe
- PAC-SG76RJ-E (unit side: Φ9.52 diameter, onsite pipe side: Φ15.88 diameter)
- PAC-493PI (unit side: Φ6.32 diameter, onsite pipe side: Φ9.52 diameter)
- MAC-A454JP-E (unit side: Φ9.52 diameter, onsite pipe side: Φ12.7 diameter)
- MAC-A455JP-E (unit side: Φ12.7 diameter, onsite pipe side: Φ9.52 diameter)
- MAC-A456JP-E (unit side: Φ12.7 diameter, onsite pipe side: Φ15.88 diameter)

Unit side 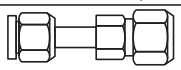 Onsite piping side

Installation procedure
(carefully read the following before installing.)
This optional part is used to connect indoor/outdoor unit to onsite pipes of different diameters.
※When installing this optional part, be sure to read "Refrigerant pipe connection" in the installation manual attached to outdoor unit.

1) Apply flare processing to onsite pipes to adapt to R410A, according to the table on the right.Use optional accessory flare nut at this time.
※Check the installation manual attached to the outdoor unit for advisability on whether or not onsite (existing) pipes can be used.

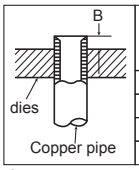

Pipe diameter (mm)	B size (mm)	
	R410A flare tool	R22/R407C flare tool
	Clutch type	
ϕ 6.35 (1/4")	0~0.5	1.0~1.5
ϕ 9.52 (3/8")	0~0.5	1.0~1.5
ϕ 12.70 (1/2")	0~0.5	1.0~1.5
ϕ 15.88 (5/8")	0~0.5	1.0~1.5

※When flare processing for refrigerant R410A is applied using current tool, refer to the table above. B size can be secured using copper pipe gauge for margin adjustment.

Outer diameter of copper pipe (mm)	Processing size of flare section (mm)	Flare shape
ϕ6.35	8.7~9.1	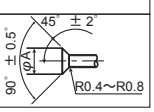
ϕ9.52	12.8~13.2	
ϕ12.70	16.2~16.6	
ϕ15.88	19.3~19.7	

2) Remove caps (both ends) for protection against mixing of foreign materials from optional part, and thinly apply refrigerat or oil (locally procured) on flare surface.

Refrigerator oil application point
Apply refrigerator oil to entire circumference of flare sheet surface. 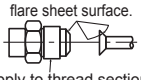 ※ Do not apply to thread section. (If applied to threads, flare nut can easily be loosened.)

3) Securely tighten flare nut using torque wrench according to the table on the right.

〈Proper tightening torque using torque wrench〉

Outer diameter of copper pipe (mm)	Tightening torque N•m (kgf•cm)
ϕ6.35	14~18 (140~180)
ϕ9.52	34~42 (340~420)
ϕ12.70	49~61 (490~610)
ϕ15.88	68~82 (680~820)

4) After refrigerant pipe is connected, be sure to perform gas leakage inspection for onsite connection pipes (including this optional part) and indoor/outdoor unit.

5) Heat insulation is necessary for this optional part: Wrap heat insulator (locally procured) around the onsite pipes and also the optional part (for dewdrop dripping prevention).

6) Perform test run according to the installation manual of the unit, making sure to also perform operation check.

OPTIONAL PARTS

Joint Pipe Unit ϕ9.52 → Pipe ϕ12.7 MAC-A454JP-E

Photo

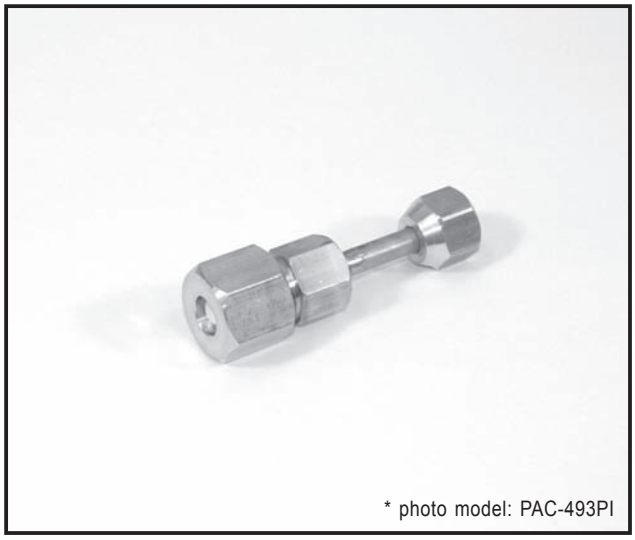

* photo model: PAC-493PI

Descriptions

A part to connect refrigerant pipes of the different diameter. (Unit ϕ9.52 → ϕ12.7)

Applicable Models

- MXZ-3A54VA
- MXZ-4A71VA
- MXZ-4A80VA
- MXZ-5A100VA
- MXZ-8A140VA
- PAC-AK30BC
- PAC-AK50BC

Specifications

Pipe diameter	Φ 9.52
Pipe material	C 1220T - OL

Dimensions

Unit : mm (inch)

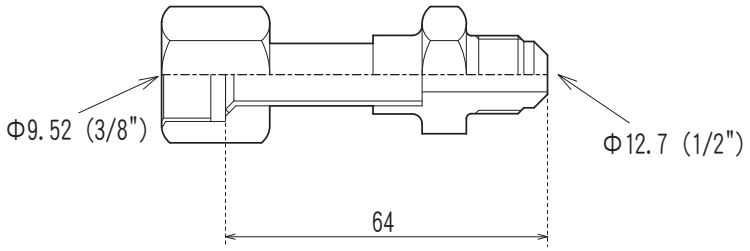

How to Use / How to Install

Make sure that you have all the following parts, in addition to this manual in this box:

Joint Pipe
- PAC-SG76RJ-E (unit side: Φ9.52 diameter, onsite pipe side: Φ15.88 diameter)
- PAC-493PI (unit side: Φ6.32 diameter, onsite pipe side: Φ9.52 diameter)
- MAC-A454JP-E (unit side: Φ9.52 diameter, onsite pipe side: Φ12.7 diameter)
- MAC-A455JP-E (unit side: Φ12.7 diameter, onsite pipe side: Φ9.52 diameter)
- MAC-A456JP-E (unit side: Φ12.7 diameter, onsite pipe side: Φ15.88 diameter)

Unit side 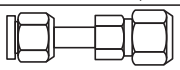 Onsite piping side

Installation procedure
(carefully read the following before installing.)
This optional part is used to connect indoor/outdoor unit to onsite pipes of different diameters.
※ When installing this optional part, be sure to read "Refrigerant pipe connection" in the installation manual attached to outdoor unit.

1) Apply flare processing to onsite pipes to adapt to R410A, according to the table on the right. Use optional accessory flare nut at this time.
※ Check the installation manual attached to the outdoor unit for advisability on whether or not onsite (existing) pipes can be used.

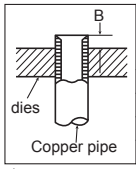

Pipe diameter (mm)	B size (mm)	
	R410A flare tool	R22/R407C flare tool
	Clutch type	
ϕ 6.35 (1/4")	0~0.5	1.0~1.5
ϕ 9.52 (3/8")	0~0.5	1.0~1.5
ϕ 12.70 (1/2")	0~0.5	1.0~1.5
ϕ 15.88 (5/8")	0~0.5	1.0~1.5

※ When flare processing for refrigerant R410A is applied using current tool, refer to the table above. B size can be secured using copper pipe gauge for margin adjustment.

Outer diameter of copper pipe (mm)	Processing size of flare section (mm)	Flare shape
ϕ 6.35	8.7~9.1	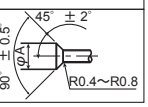
ϕ 9.52	12.8~13.2	
ϕ 12.70	16.2~16.6	
ϕ 15.88	19.3~19.7	

2) Remove caps (both ends) for protection against mixing of foreign materials from optional part, and thinly apply refrigerat or oil (locally procured) on flare surface.

Refrigerator oil application point
Apply refrigerator oil to entire circumference of flare sheet surface. 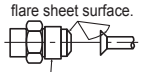 ※ Do not apply to thread section. (If applied to threads, flare nut can easily be loosened.)

3) Securely tighten flare nut using torque wrench according to the table on the right.

〈Proper tightening torque using torque wrench〉

Outer diameter of copper pipe (mm)	Tightening torque N•m (kgf•cm)
ϕ 6.35	14~18 (140~180)
ϕ 9.52	34~42 (340~420)
ϕ 12.70	49~61 (490~610)
ϕ 15.88	68~82 (680~820)

4) After refrigerant pipe is connected, be sure to perform gas leakage inspection for onsite connection pipes (including this optional part) and indoor/outdoor unit.

5) Heat insulation is necessary for this optional part: Wrap heat insulator (locally procured) around the onsite pipes and also the optional part (for dewdrop dripping prevention).

6) Perform test run according to the installation manual of the unit, making sure to also perform operation check.

Joint Pipe Unit ϕ12.7 → Pipe ϕ9.52 MAC-A455JP-E

Photo

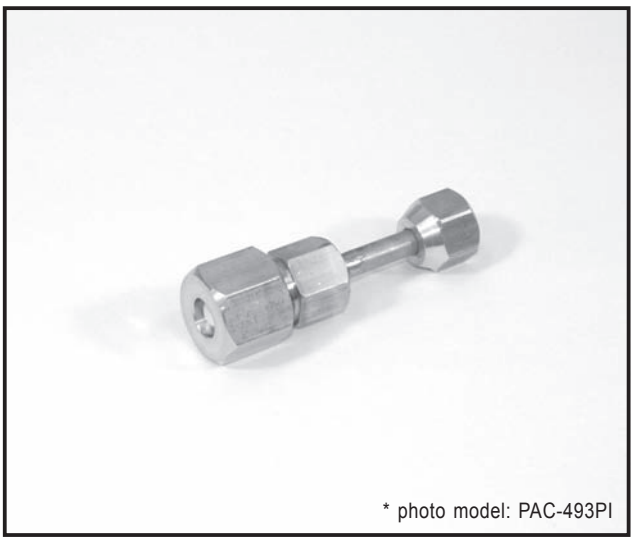

* photo model: PAC-493PI

Descriptions

A part to connect the refrigerant pipes of the different diameter.
(Unit ϕ12.7 → ϕ9.52)

Applicable Models

- MXZ-4A71VA
- MXZ-4A80VA
- MXZ-5A100VA
- PAC-AK30BC
- PAC-AK50BC

Specifications

Pipe diameter	Φ 12.7
Pipe material	C 1220T - OL

Dimensions

Unit : mm (inch)

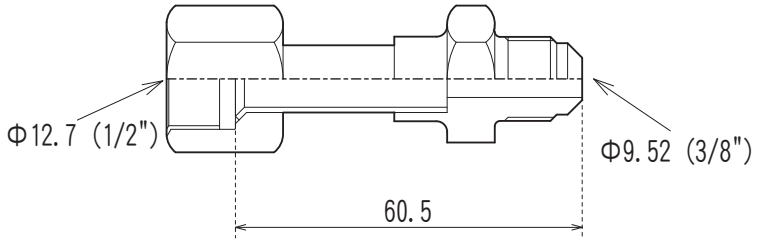

How to Use / How to Install

Make sure that you have all the following parts, in addition to this manual in this box:

Joint Pipe
- PAC-SG76RJ-E (unit side: Φ9.52 diameter, onsite pipe side: Φ15.88 diameter)
- PAC-493PI (unit side: Φ6.32 diameter, onsite pipe side: Φ9.52 diameter)
- MAC-A454JP-E (unit side: Φ9.52 diameter, onsite pipe side: Φ12.7 diameter)
- MAC-A455JP-E (unit side: Φ12.7 diameter, onsite pipe side: Φ9.52 diameter)
- MAC-A456JP-E (unit side: Φ12.7 diameter, onsite pipe side: Φ15.88 diameter)

Unit side 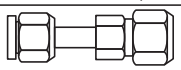 Onsite piping side

Installation procedure
(carefully read the following before installing.)
This optional part is used to connect indoor/outdoor unit to onsite pipes of different diameters.
※ When installing this optional part, be sure to read "Refrigerant pipe connection" in the installation manual attached to outdoor unit.

1) Apply flare processing to onsite pipes to adapt to R410A, according to the table on the right.Use optional accessory flare nut at this time.
※ Check the installation manual attached to the outdoor unit for advisability on whether or not onsite (existing) pipes can be used.

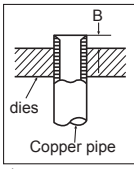

Pipe diameter (mm)	B size (mm)	
	R410A flare tool	R22/R407C flare tool
	Clutch type	
ϕ 6.35 (1/4")	0~0.5	1.0~1.5
ϕ 9.52 (3/8")	0~0.5	1.0~1.5
ϕ12.70 (1/2")	0~0.5	1.0~1.5
ϕ15.88 (5/8")	0~0.5	1.0~1.5

※ When flare processing for refrigerant R410A is applied using current tool, refer to the table above. B size can be secured using copper pipe gauge for margin adjustment.

Outer diameter of copper pipe (mm)	Processing size of flare section (mm)	Flare shape
ϕ6.35	8.7~9.1	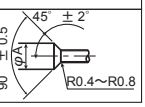
ϕ9.52	12.8~13.2	
ϕ12.70	16.2~16.6	
ϕ15.88	19.3~19.7	

2) Remove caps (both ends) for protection against mixing of foreign materials from optional part, and thinly apply refrigerat or oil (locally procured) on flare surface.

Refrigerator oil application point
Apply refrigerator oil to entire circumference of flare sheet surface. 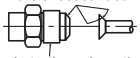 ※ Do not apply to thread section. (If applied to threads, flare nut can easily be loosened.)

3) Securely tighten flare nut using torque wrench according to the table on the right.

〈Proper tightening torque using torque wrench〉

Outer diameter of copper pipe (mm)	Tightening torque N•m (kgf•cm)
ϕ6.35	14~18 (140~180)
ϕ9.52	34~42 (340~420)
ϕ12.70	49~61 (490~610)
ϕ15.88	68~82 (680~820)

4) After refrigerant pipe is connected, be sure to perform gas leakage inspection for onsite connection pipes (including this optional part) and indoor/outdoor unit.

5) Heat insulation is necessary for this optional part: Wrap heat insulator (locally procured) around the onsite pipes and also the optional part (for dewdrop dripping prevention).

6) Perform test run according to the installation manual of the unit, making sure to also perform operation check.

Joint Pipe Unit ϕ12.7 → Pipe ϕ15.88 MAC-A456JP-E

Photo

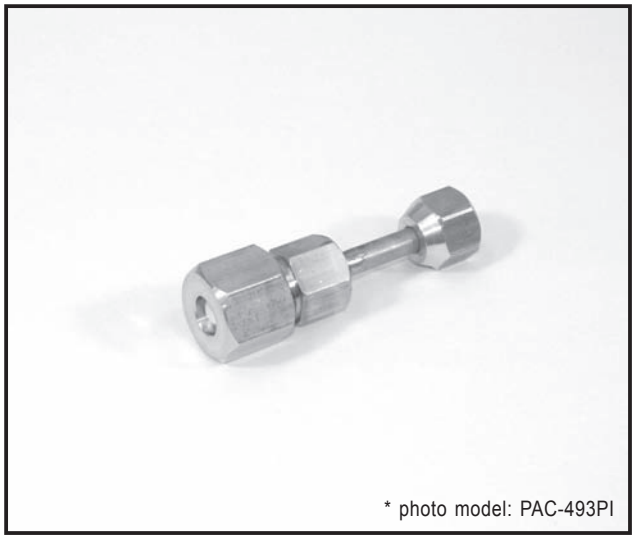

* photo model: PAC-493PI

Descriptions

A part to connect refrigerant pipes of the different diameter. (Unit ϕ12.7 → ϕ15.88)

Applicable Models

- MXZ-4A71VA
- MXZ-4A80VA
- MXZ-5A100VA
- MXZ-8A140VA
- PAC-AK30BC
- PAC-AK50BC

Specifications

Pipe diameter	Φ 12.7
Pipe material	C 1220T - OL

Dimensions

Unit : mm (inch)

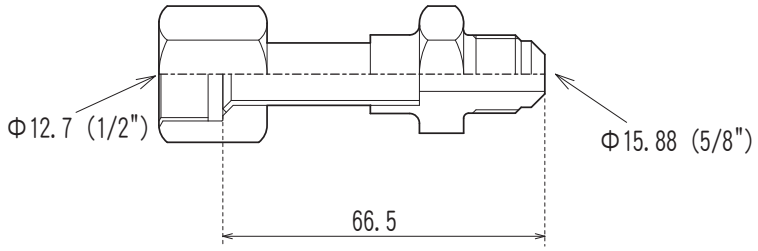

How to Use / How to Install

Make sure that you have all the following parts, in addition to this manual in this box:

Joint Pipe
- PAC-SG76RJ-E (unit side: Φ9.52 diameter, onsite pipe side: Φ15.88 diameter)
- PAC-493PI (unit side: Φ6.32 diameter, onsite pipe side: Φ9.52 diameter)
- MAC-A454JP-E (unit side: Φ9.52 diameter, onsite pipe side: Φ12.7 diameter)
- MAC-A455JP-E (unit side: Φ12.7 diameter, onsite pipe side: Φ9.52 diameter)
- MAC-A456JP-E (unit side: Φ12.7 diameter, onsite pipe side: Φ15.88 diameter)

Unit side 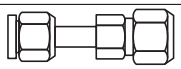 Onsite piping side

Installation procedure
(carefully read the following before installing.)
This optional part is used to connect indoor/outdoor unit to onsite pipes of different diameters.
※ When installing this optional part, be sure to read "Refrigerant pipe connection" in the installation manual attached to outdoor unit.

1) Apply flare processing to onsite pipes to adapt to R410A, according to the table on the right.Use optional accessory flare nut at this time.
※ Check the installation manual attached to the outdoor unit for advisability on whether or not onsite (existing) pipes can be used.

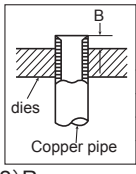

Pipe diameter (mm)	B size (mm)	
	R410A flare tool	R22/R407C flare tool
	Clutch type	
ϕ 6.35 (1/4")	0~0.5	1.0~1.5
ϕ 9.52 (3/8")	0~0.5	1.0~1.5
ϕ 12.70 (1/2")	0~0.5	1.0~1.5
ϕ 15.88 (5/8")	0~0.5	1.0~1.5

※ When flare processing for refrigerant R410A is applied using current tool, refer to the table above. B size can be secured using copper pipe gauge for margin adjustment.

Outer diameter of copper pipe (mm)	Processing size of flare section (mm)	Flare shape
ϕ6.35	8.7~9.1	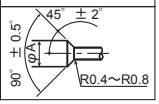
ϕ9.52	12.8~13.2	
ϕ12.70	16.2~16.6	
ϕ15.88	19.3~19.7	

2) Remove caps (both ends) for protection against mixing of foreign materials from optional part, and thinly apply refrigerat or oil (locally procured) on flare surface.

Refrigerator oil application point
Apply refrigerator oil to entire circumference of flare sheet surface. 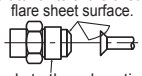 ※ Do not apply to thread section. (If applied to threads, flare nut can easily be loosened.)

3) Securely tighten flare nut using torque wrench according to the table on the right.

〈Proper tightening torque using torque wrench〉

Outer diameter of copper pipe (mm)	Tightening torque N•m (kgf•cm)
ϕ6.35	14~18 (140~180)
ϕ9.52	34~42 (340~420)
ϕ12.70	49~61 (490~610)
ϕ15.88	68~82 (680~820)

4) After refrigerant pipe is connected, be sure to perform gas leakage inspection for onsite connection pipes (including this optional part) and indoor/outdoor unit.

5) Heat insulation is necessary for this optional part: Wrap heat insulator (locally procured) around the onsite pipes and also the optional part (for dewdrop dripping prevention).

6) Perform test run according to the installation manual of the unit, making sure to also perform operation check.

Filter Dryer (for Liquid Pipe of ϕ6.35) PAC-SG81DR-E

Photo

Descriptions

Removes minute dirt particles in the refrigerant pipe, when replacing an air-conditioning unit. (for Liquid Pipe of ϕ6.35)

Applicable Models

- PUHZ-RP35
- PUHZ-RP50

Specifications

Pipe size	Liquid side : Φ6.35 flare
Applicable refrigrant	R407C / R410A

Dimensions

Unit : mm

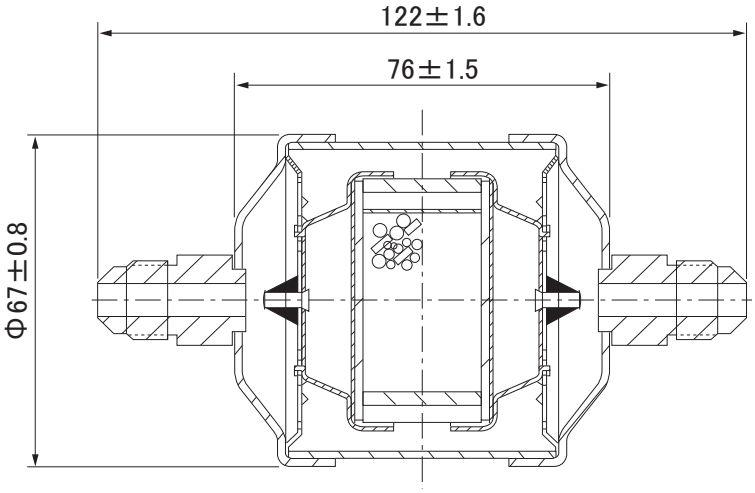

OPTIONAL PARTS

How to Use / How to Install

Make sure that you have all the following parts.

①Filter dryer PAC-SG81DR-E (for diameter of Φ6.35) PAC-SG82DR-E (for diameter of Φ9.52)	②Connection pipe PAC-SG81DR-E (for diameter of Φ6.35) PAC-SG82DR-E (for diameter of Φ9.52)	③Heat insulator PAC-SG81DR-E (for diameter of Φ6.35) PAC-SG82DR-E (for diameter of Φ9.52)
For diameter of 6.35 or 9.52 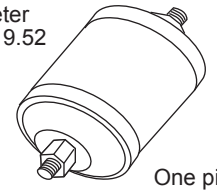 One piece	For diameter of 6.35 or 9.52 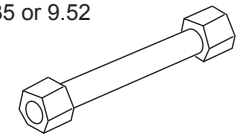 One piece	For diameter of 6.35 or 9.52 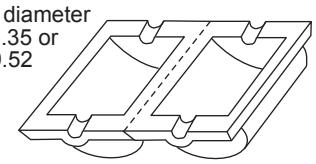 One piece

Installation Procedures (carefully read the following before installation.)

Cautions:
1) This optional part is used to remove moisture within refrigerant pipe to prevent compressor failures. However, if too much impurity inside refrigerant cycle has accumulated, such as amount of mixed moisture, dryer must be replaced after one season elapses. (Amount of allowable moisture absorption: 3 -7 cc)
2) Install the filter dryer to refrigerant pipe mid way on liquid side.
3) Filter dryer can be installed outside of the unit. Installation inside the unit is possible only when installation space can be secured.

1 Preparation for installation

In the following parts, the installation for PUHZ-RP3VHA is highlighted as a representive.

- 1) Refer to the installation manual of the unit for procedure of refrigerant piping and vacuuming, etc. Remove the panel from outdoor unit. (See Fig. 1.)
- 2) Removing the panel
  Remove the service panel, front pipe cover and back pipe cover.
  Remove back pipe cover only when taking it from back pipe.
- 3) Pipe connection
  - When bending pipe, take bending R (R100～R150) just enough, and take care that pipe des not fold.
  - Apply pipe processing without touching compressor. (If the pipe touches, it may cause abnormal sound or vibration.)
  - Apply flare processing to connection pipe, arranging this on site.
  - Thinly apply refrigerator oil (locally procured) to flare sheet surface.

Outer diameter of copper pipe (mm)	Processing size of flare section (mm)
ϕ6.35	8.7～9.1
ϕ9.52	12.8～13.2

Flare shape	Refrigerator oil application point
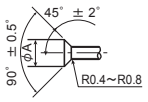	Apply refrigerator oil to entire circumference of flare sheet surface. 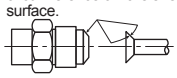

〈Proper tightening torque using torque wrench〉

Outer diameter of copper pipe (mm)	Tightening torque N･m (kgf･cm)
ϕ6.35	14～18（140～180）
ϕ9.52	34～42（340～420）

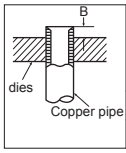

Pipe diameter (mm)	B size (mm)	
	R410A flare tool	R22, R407C flare tool
	Clutch type	
ϕ 6.35（1/4”）	0～0.5	1.0～1.5
ϕ 9.52（3/8”）	0～0.5	1.0～1.5

※When flare processing for refrigerant R410A is applied using current tool, refer to the table above. B size can be secured using copper pipe gauge for margin adjustment.

【Fig. 1】
Panel disassembly diagram

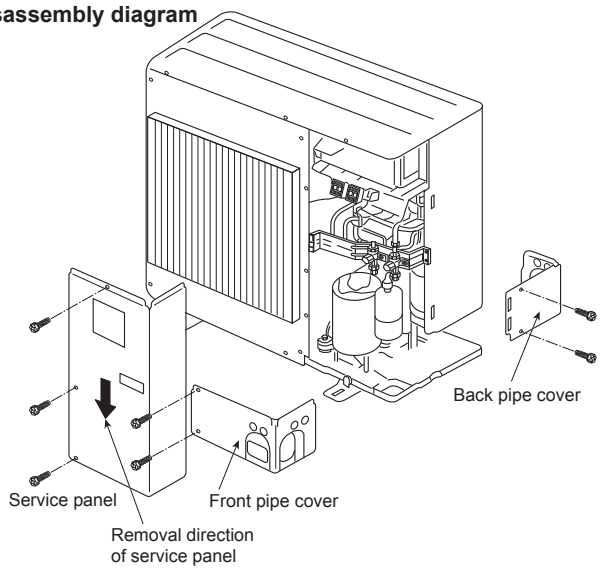

OPTIONAL PARTS

2 Installation of Filter dryer

Be sure to install filter dryer on liquid side (narrow side).

・1） When filter dryer is being installed inside the unit, refer to Figs 2 and 3, according to the installation space for dryer. If installation space for dryer cannot be secured, install it outside of the unit.Install referring to Item 2-ii).

【Fig. 2】
Filter dryer installation diagram (Installation inside the unit)

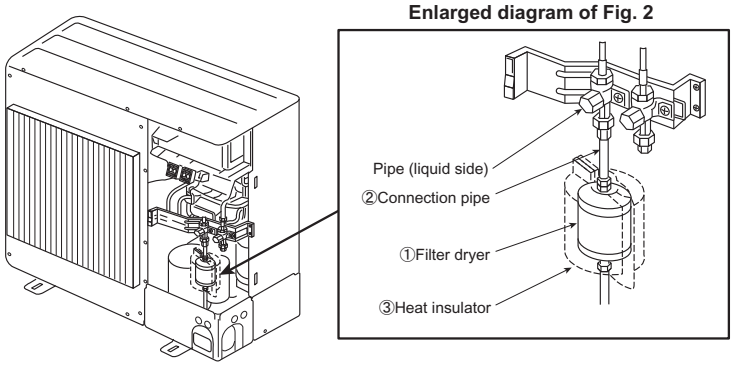

【Fig. 3】
Filter dryer installation diagram (horizontal installation inside the unit)

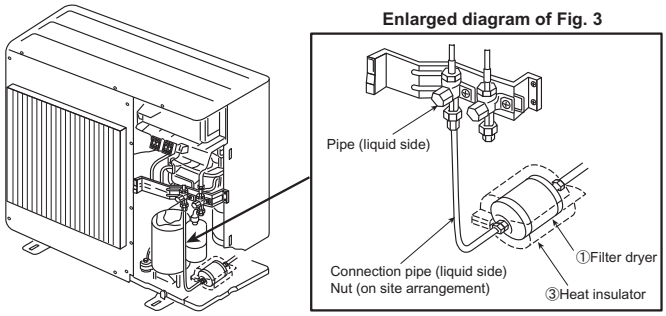

2） When installing outside of the unit, install it at optional position of extension pipe. Make and arrange connection pipe on the site. (See Fig. 4.)

【Fig. 4】
Filter dryer installation diagram (Installation outside of the unit)

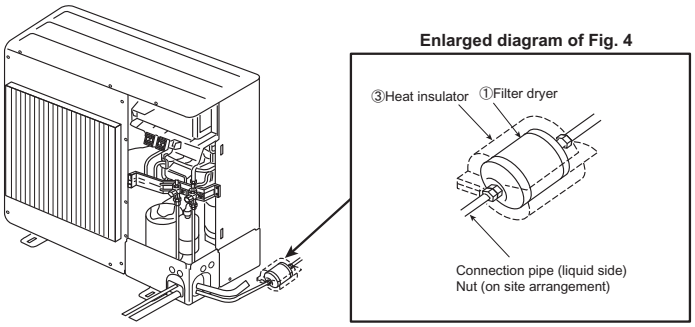

3） Perform heat insulation work. (To prevent dewdrops forming)

・After dryer is installed, wrap heat insulator around dryer section.
※Apply taping to joint of heat insulator ensuring that there is no gap. Also wrap heat insulator around pipe.

3 Filter dryer installation is now complete. Reattach service panel as it was.

4 Test run

1） Perform test run according to the installation manual of the unit, and be sure to perform gas leak check and operation check.

Filter Dryer (for Liquid Pipe of ϕ9.52) PAC-SG82DR-E

Photo

Descriptions

Removes minute dirt particles in the refrigerant pipe, when replacing an air-conditioning unit. (for Liquid Pipr of ϕ9.52)

Applicable Models

- MXZ-8A140VA
- PUHZ-RP60
- PUHZ-RP71
- PUHZ-RP100
- PUHZ-RP125
- PUHZ-RP140
- PUHZ-RP200
- PUHZ-HRP71
- PUHZ-HRP100
- PUHZ-HRP125
- PUHZ-P200
- PU(H)-P71
- PU(H)-P100
- PU(H)-P125
- PU(H)-P140

Specifications

Pipe size	Liquid side: Φ 9.52 flare
Applicable refrigrant	R407C / R410A

Dimensions

Unit : mm

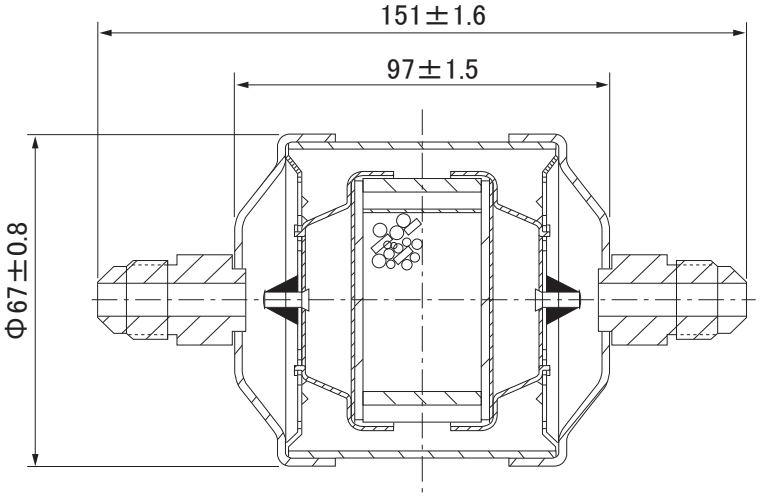

OPTIONAL PARTS

How to Use / How to Install

Make sure that you have all the following parts.

①Filter dryer PAC-SG81DR-E (for diameter of Φ6.35) PAC-SG82DR-E (for diameter of Φ9.52)	②Connection pipe PAC-SG81DR-E (for diameter of Φ6.35) PAC-SG82DR-E (for diameter of Φ9.52)	③Heat insulator PAC-SG81DR-E (for diameter of Φ6.35) PAC-SG82DR-E (for diameter of Φ9.52)
For diameter of 6.35 or 9.52 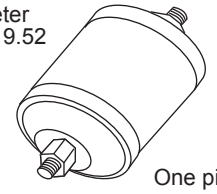 One piece	For diameter of 6.35 or 9.52 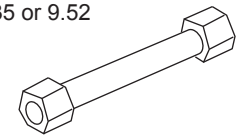 One piece	For diameter of 6.35 or 9.52 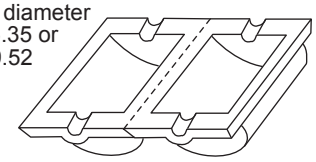 One piece

Installation Procedures (carefully read the following before installation.)

Cautions:
1) This optional part is used to remove moisture within refrigerant pipe to prevent compressor failures. However, if too much impurity inside refrigerant cycle has accumulated, such as amount of mixed moisture, dryer must be replaced after one season elapses. (Amount of allowable moisture absorption: 3 -7 cc)
2) Install the filter dryer to refrigerant pipe mid way on liquid side.
3) Filter dryer can be installed outside of the unit. Installation inside the unit is possible only when installation space can be secured.

1 Preparation for installation

In the following parts, the installation for PUHZ-RP3VHA is highlighted as a representive.

- 1) Refer to the installation manual of the unit for procedure of refrigerant piping and vacuuming, etc. Remove the panel from outdoor unit. (See Fig. 1.)
- 2) Removing the panel
  Remove the service panel, front pipe cover and back pipe cover.
  Remove back pipe cover only when taking it from back pipe.
- 3) Pipe connection
  - When bending pipe, take bending R (R100～R150) just enough, and take care that pipe des not fold.
  - Apply pipe processing without touching compressor. (If the pipe touches, it may cause abnormal sound or vibration.)
  - Apply flare processing to connection pipe, arranging this on site.
  - Thinly apply refrigerator oil (locally procured) to flare sheet surface.

Outer diameter of copper pipe (mm)	Processing size of flare section (mm)
ϕ6.35	8.7～9.1
ϕ9.52	12.8～13.2

Flare shape	Refrigerator oil application point
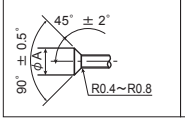	Apply refrigerator oil to entire circumference of flare sheet surface. 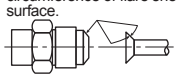

〈Proper tightening torque using torque wrench〉

Outer diameter of copper pipe (mm)	Tightening torque N･m (kgf･cm)
ϕ6.35	14～18（140～180）
ϕ9.52	34～42（340～420）

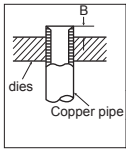

Pipe diameter (mm)	B size (mm)	
	R410A flare tool	R22, R407C flare tool
	Clutch type	
ϕ 6.35（1/4”）	0～0.5	1.0～1.5
ϕ 9.52（3/8”）	0～0.5	1.0～1.5

※When flare processing for refrigerant R410A is applied using current tool, refer to the table above. B size can be secured using copper pipe gauge for margin adjustment.

【Fig. 1】
Panel disassembly diagram

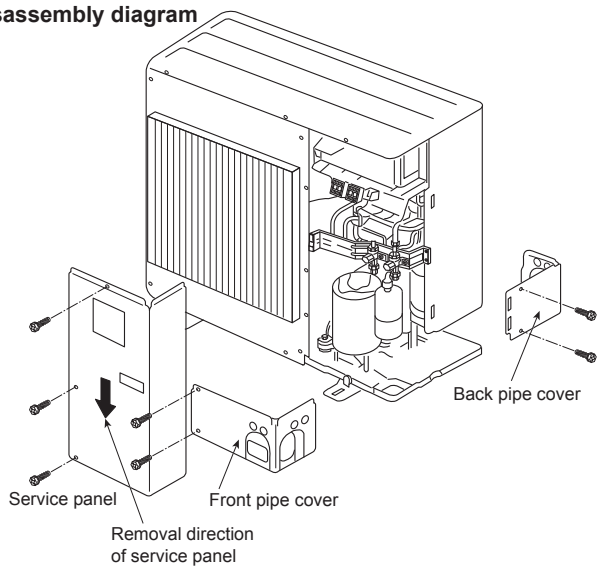

OPTIONAL PARTS

2 Installation of Filter dryer

Be sure to install filter dryer on liquid side (narrow side).

・1) When filter dryer is being installed inside the unit, refer to Figs 2 and 3, according to the installation space for dryer. If installation space for dryer cannot be secured, install it outside of the unit.Install referring to Item 2-ii).

【Fig. 2】
Filter dryer installation diagram (Installation inside the unit)

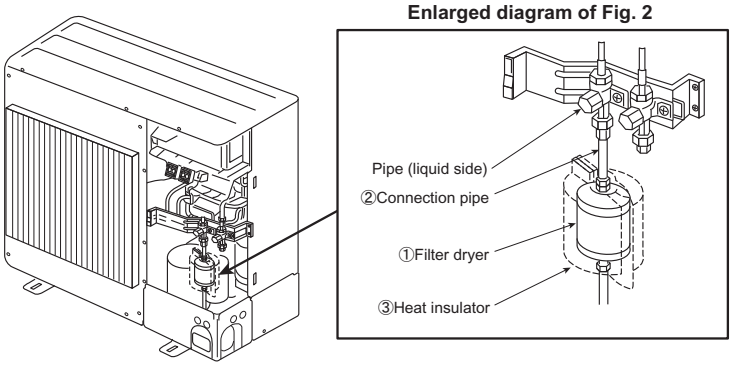

【Fig. 3】
Filter dryer installation diagram (horizontal installation inside the unit)

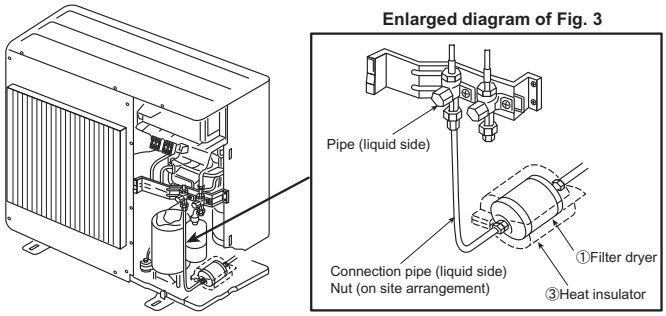

2) When installing outside of the unit, install it at optional position of extension pipe. Make and arrange connection pipe on the site. (See Fig. 4.)

【Fig. 4】
Filter dryer installation diagram (Installation outside of the unit)

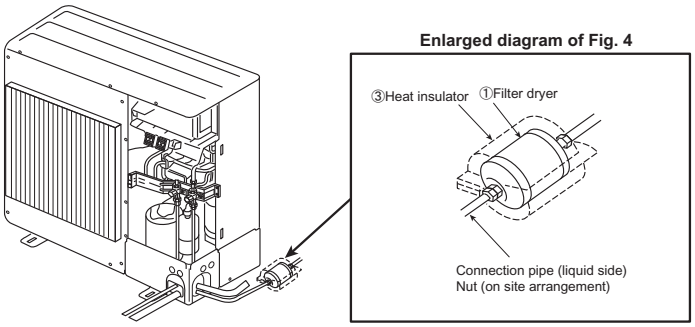

3) Perform heat insulation work. (To prevent dewdrops forming)

・After dryer is installed, wrap heat insulator around dryer section.
※Apply taping to joint of heat insulator ensuring that there is no gap. Also wrap heat insulator around pipe.

3 Filter dryer installation is now complete. Reattach service panel as it was.

4 Test run

1) Perform test run according to the installation manual of the unit, and be sure to perform gas leak check and operation check.

Filter Dryer (for Liquid Pipe of ϕ 12.7) PAC-SG85DR-E

Photo

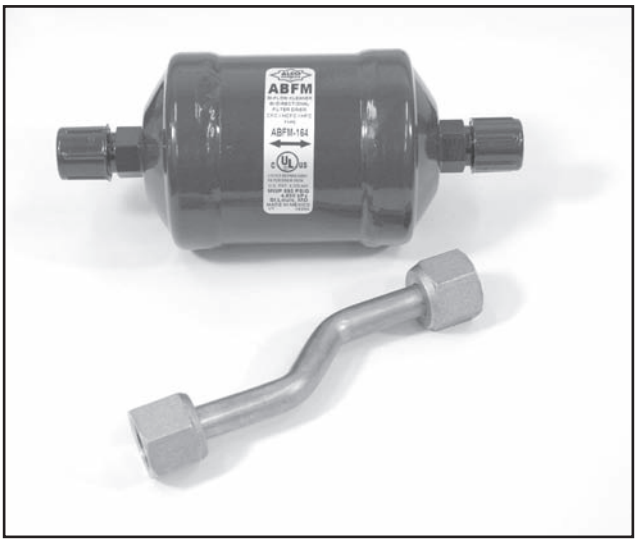

Descriptions

Removes minute dirt particles in the refrigerant pipe. Is used when replacing an air-conditioning unit. (for Liquid Pipe of ϕ12.7)

Applicable Models

■ PUHZ-RP250 ■ PUHZ-P250

Specifications

Pipe size	Liquid side: Φ 12.7 flare
Applicable refrigrant	R407C / R410A

Dimensions

Unit : mm

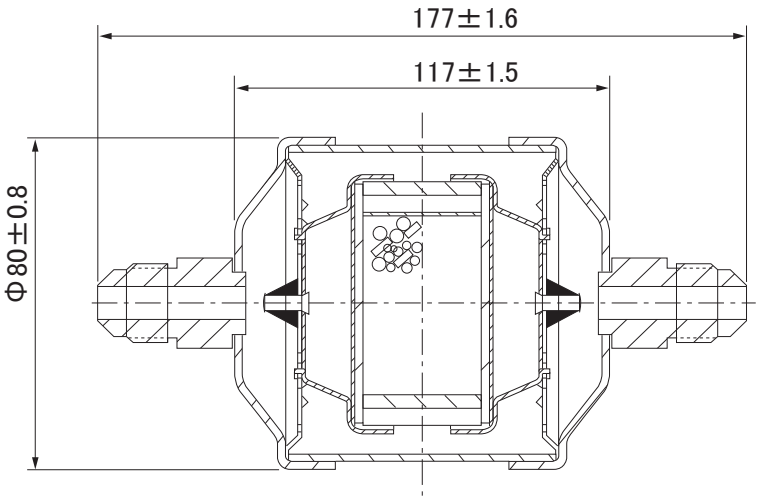

OPTIONAL PARTS

How to Use / How to Install

Make sure that you have all the following parts.

①Filter dryer	②Connection pipe	③Heat insulator
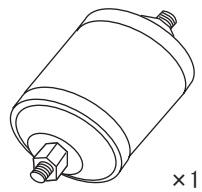 ×1	With PAC-SG81DR-E (for ϕ6.35) or PAC-SG82DR-E (for ϕ9.52) 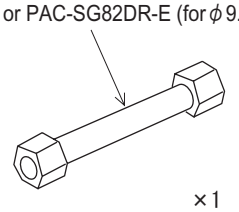 ×1 or With PAC-SG85DR-E (for ϕ12.7) 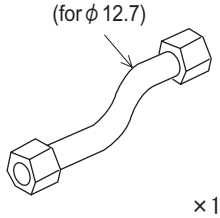 ×1	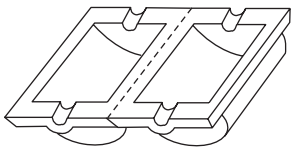 ×1

Installation Procedures (carefully read the following before installing)

Cautions
1) This optional part is used to remove moisture inside the refrigerant pipe and prevent fault of compressor. However, if there is excessive contamination inside the refrigerant cycle, such as a large amount of mixed moisture, etc., the dryer must be replaced after it is used during one season (the amount of allowable moisture absorption: 3-7 cc).
2) Install the filter dryer to refrigerant pipe midway on liquid side, using flare connection.
3) The filter dryer can be attached outside the unit. It can also be attached to the inside of unit only if the space for installation can be secured

1 Preparations for Installation

i) Refer to the installation manual of outdoor unit for the procedures of removing outdoor unit panel, refrigerant piping, vacuuming, etc.
ii) Removing panel
- Remove the service panel and cover.

iii) Connecting pipes
- When bending pipe, allow enough bending R (R100-150), and take care that the pipe is not folded.
- Lay out the pipe so that it does not come into contact with the compressor. (Being in contact could cause abnormal sound or vibrations.)
- Apply flare processing to the connection pipe procured at local site.
- Thinly coat the flare sheet surface with refrigerant oil (procured at local site).

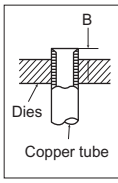

Pipe diameter (mm)	Dimension B (mm)	
	R410A flare tool	R22/R407C flare tool
	Clutch type	
ϕ 6.35(1/4")	0～0.5	1.0～1.5
ϕ 9.52(3/8")	0～0.5	1.0～1.5
ϕ 12.7(1/2")	0～0.5	1.0～1.5

※Use the above table as a reference when processing the flare for refrigerant R410A using the conventional tool. Dimension B can be secured when using a copper pipe gauge for outgoing margin adjustment.

Outer diameter of copper pipe (mm)	Processing size of flare portion ϕA (mm)
ϕ6.35	8.7～9.1
ϕ9.52	12.8～13.2
ϕ12.7	16.2～16.6

Flare shape	Refrigerant oil coating point
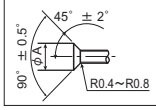	Coat the entire circumference of sheet surface with refrigerant oil. 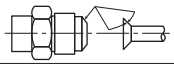

〈Appropriate tightening force with torque wrench〉

Outer diameter of copper pipe (mm)	Tightening force N.m (kgf-cm)
ϕ6.35	14～18（140～180）
ϕ9.52	34～42（340～420）
ϕ12.7	49～61（490～610）

2 Installing Filter Dryer

Be sure to attach the filter dryer on the liquid pipe (narrower one)

i) When installing the filter dryer inside the unit, refer to Fig. 1 or Fig. 2 according to the space in unit and install it. If there is no space for the dryer to be installed in unit, install it outside the unit (see Fig. 3).

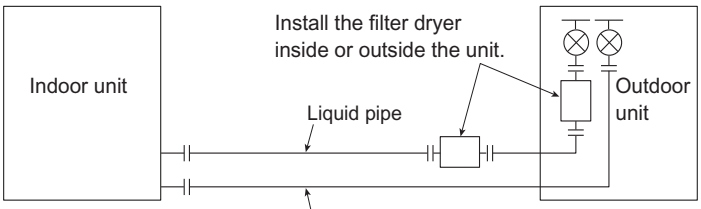

【Fig1】
Filter dryer attachment diagram (installing in unit)

With PAC-SG81DR-E or PAC-SG82DR-E

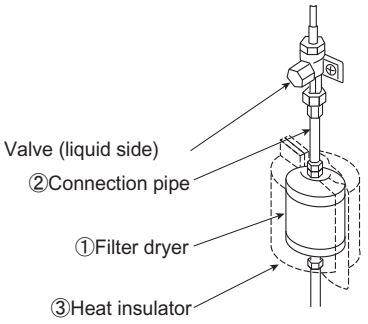

With PAC-SG85DR-E

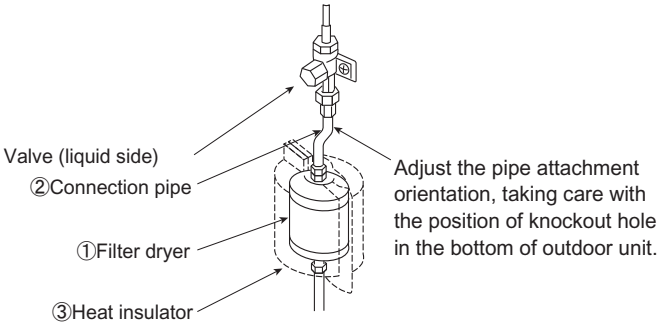

OPTIONAL PARTS

【Fig2】Filter dryer attachment diagram (horizontal attachment in unit)

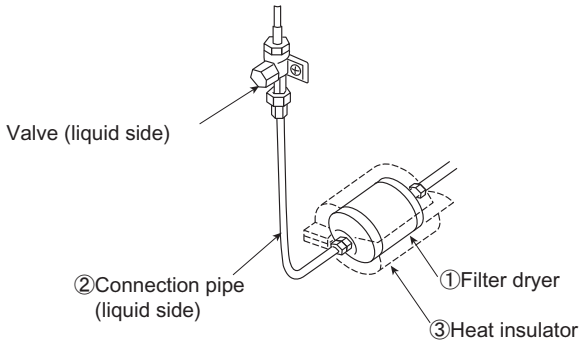

ii) When installing the filter dryer outside the unit, attach it to any position of extended pipe.
Procure the connection pipe at local site.

【Fig3】Filter dryer attachment diagram (attachment outside unit)

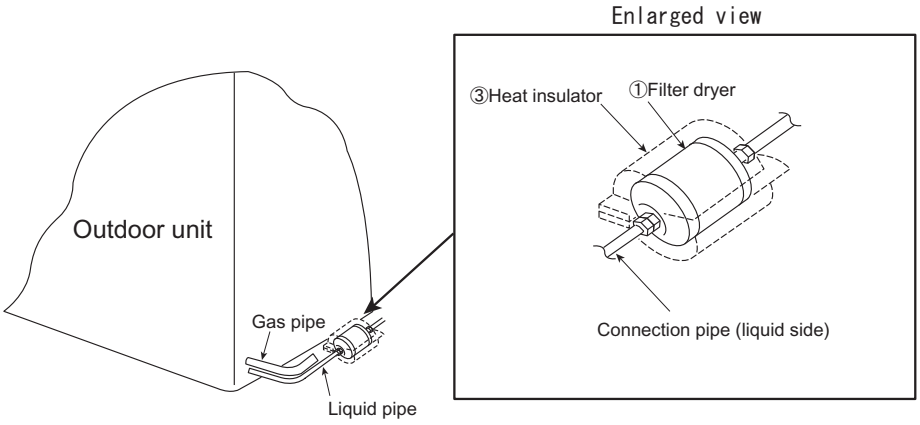

iii) Heat insulation (to prevent dripping)
- After attaching the filter dryer, wrap the heat insulator around the dryer.
  ※Tape the seam of heat insulator so that no gap is produced.
- Also wrap heat insulator around other pipes.

3 The attachment of filter dryer is now complete.

Reattach the service panels, etc. to the original position.

4 Test Run

i) Perform test run according to the installation manual of unit, and be sure to execute gas leakage check and operation check.

Branch Box Outer Cover (for outdoor installation) PAC-AK350CVR-E

Photo

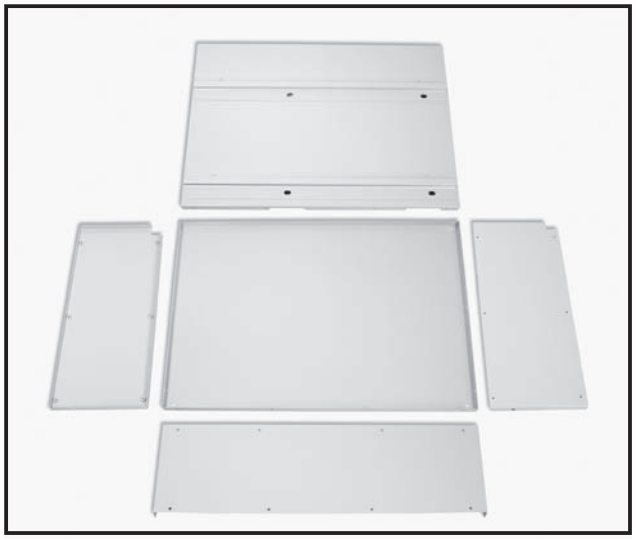

Descriptions

Enables outdoor installation of branch box in case its installation is impossible.

Applicable Models

- MXZ-8A140VA
- PAC-AK30BC
- PAC-AK50BC

Specifications

Exterior	Color (Munsell)	Ivory (3.0Y 7.8/1.1)
	Surface treatment	Acrylic resin coating
	Material	Alloy hot-dip Zinc-coated carbon steel sheet
Weight		3.5kg

Dimensions

Unit : mm

completed view

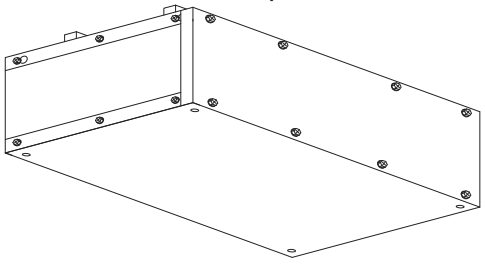

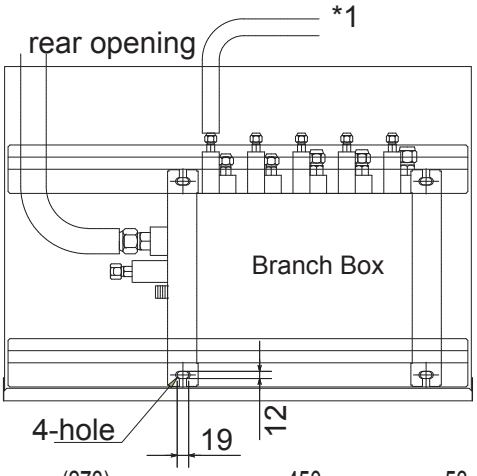

*1 Minimum dimension 330mm is required when distribution pipe is bent 90°

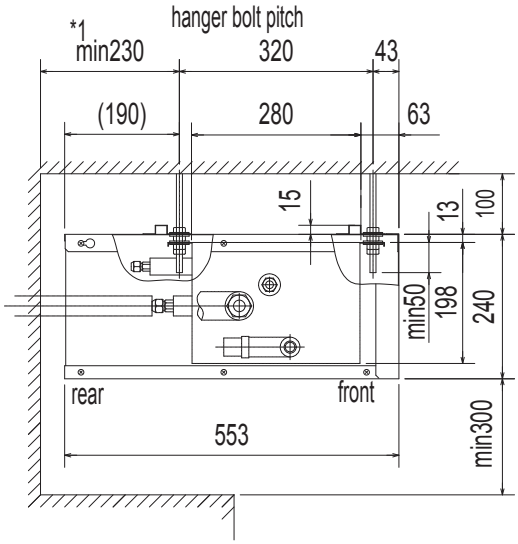

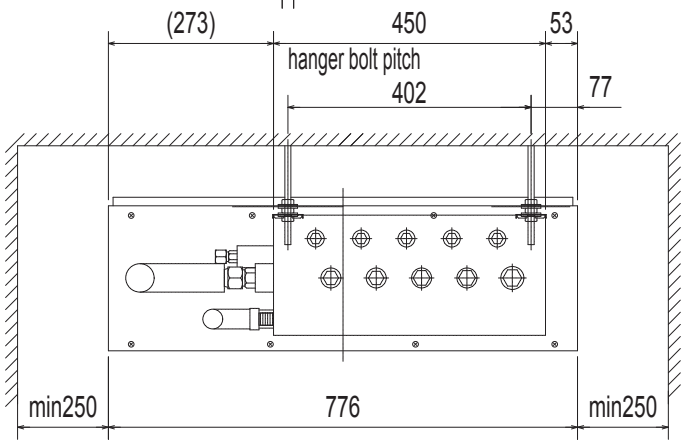

OPTIONAL PARTS

How to Use / How to Install

1 Please check if you have all the following parts in the packing before installation:

①TOP COVER	②SIDE COVER-L	③SIDE COVER-R	④UNDER COVER	⑤FRONT COVER
1pc	1pc	1pc	1pc	1pc

⑥SCREW(5×12)	⑦WASHER(insulated)	⑧HANGER	⑨INSTALLATION PROCEDURE
20pcs	8pcs	2pcs	This sheet 1 sheet

3 Installation:

【fig. 1】

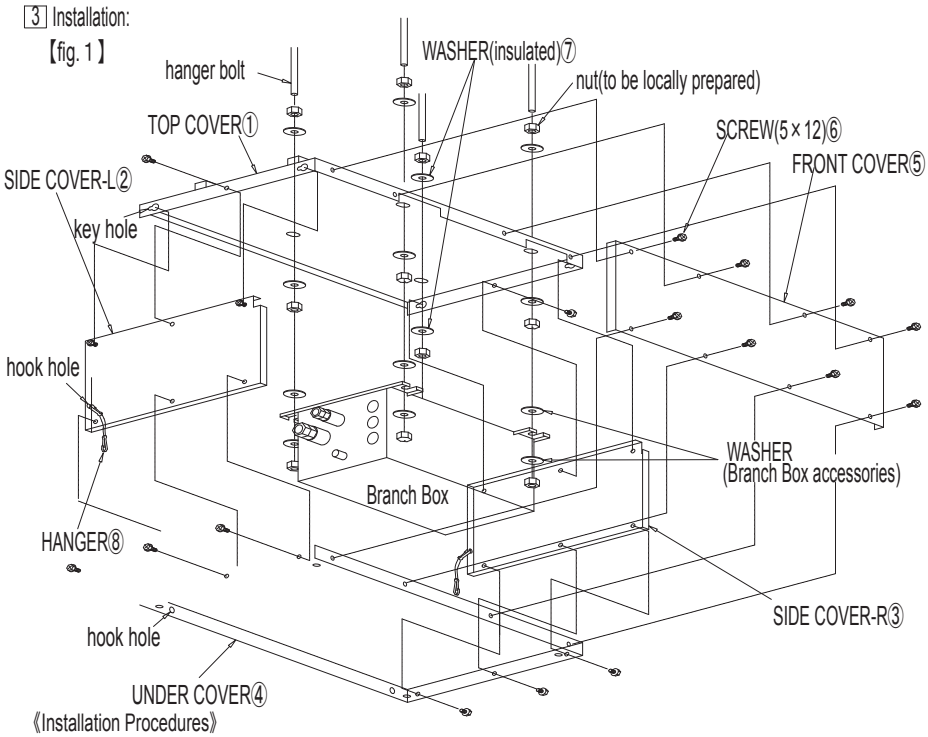

《Installation Procedures》

1.Install hanger bolts to match with the holes on the Branch Box (and the outer cover).
2.Put a nut(to be locally purchased) and a WASHER⑦ to the each hanger bolts.
3.Fix the TOP COVER① to the hanger bolts with WASHERs⑦ and nuts.【fig. 2】
Make sure to level the TOP COVER① before fixing it.
4.Put one insulated WASHER each (which come with the Branch Box) to 4 hanger bolts.【fig.3】
5.Put one WASHER and one nut each (which come with the Branch Box) to 2 hanger bolts either at front side or back side.【fig. 3】
6.Hook two LEGs on the pre-fixed WASHERs and nuts first.
Then insert hanger bolts to two LEGs on the oppostie side and fix them with WASHERs and nuts (which come with the Branch Box).【fig. 4】
Make sure to level the Branch Box before fixing it.
※Make sure that all 16 nuts are tightly fixed.
7.Install pipings and wirings etc, following the installation manual of the Branch Box.
※Piping must be installed within the Outer Cover.
8.Fix the SIDE COVERs②&③ on both sides to the TOP COVER① with SCREWs⑥.
First, put SCREWs⑥ tentatively to the holes at the both upper ends of the SIDE COVERs②&③, then hook them to the key holes on the TOP COVER①.
9.Fix the UNDER COVER④ to the SIDE COVERs②&③ with SCREWs⑥.
Hook HANGERs⑧ first to the rear holes on the SIDE COVERs②&③ and then hook the other end of the HANGERs to the rear hole on the UNDER COVER④. Thus you can avoid the UNDER COVER④ falling and the installation work will be easier.(facilitated).
10.Fix the FRONT COVER⑤ to the TOP COVER① and the UNDER COVER④ with SCREWs⑥.
※Make sure that all 20 SCREWs are tightly fixed.

【fig. 2】

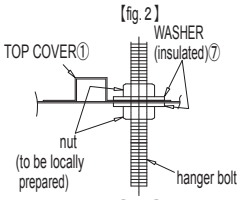

【fig. 3】

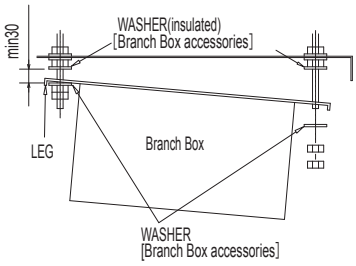

【fig. 4】

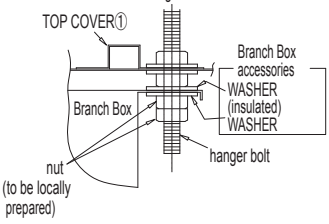

OPTIONAL PARTS

Air Outlet Guide

MAC-889SG

Photo

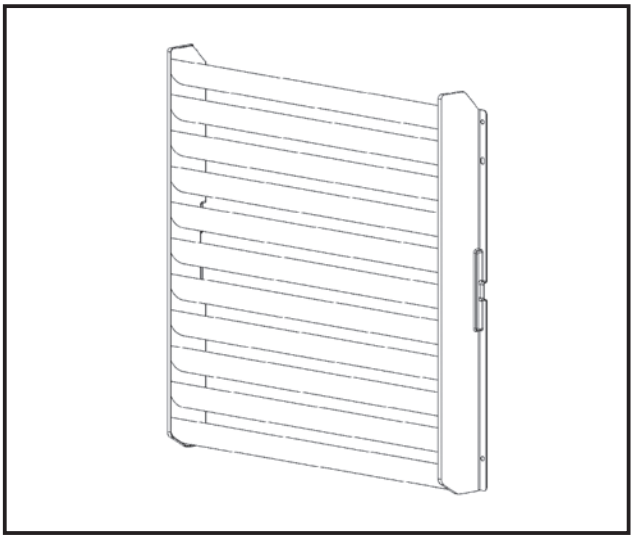

Descriptions

A part for changing the air direction from outdoor unit.
Can also be used to prevent short cycles.

Applicable Models

- MUZ-FD25/35/50VA(BH)
- MUZ-GE25/35/42/50VA(H)
- MUZ-GA60/71VA
- MUZ-HC25/35VA(B)
- MU(H)-GA20/25/35/60VB
- MU(H)-GE50VB
- MU(H)-GD80VB
- MXZ-2A30/40/52VA

Specifications

Exterior	Color (Munsell)	Ivory (3.0Y 7.8/1.1)
	Surface treatment	Polyester resin coating
	Material	Alloy hot-dip zinc-coated carbon steel sheet
Weight		2.6kg

Dimensions

Unit : mm

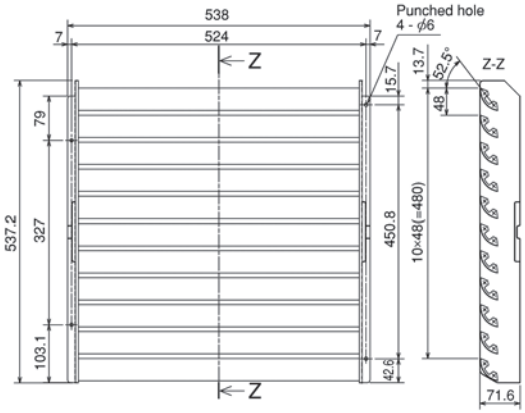

MAC-889SG

OPTIONAL PARTS

How to Use / How to Install

Selecting the installation location

• To select a location for installation, refer to "Selecting the installation location" in the installation manual included with the unit.

1. Preparations before installation to the unit

(Depending on the size of the outdoor unit, the locations for the screw holes are different.)

For 800(W)x550(H)x285(D) outdoor units
• Remove the front panel from the outdoor unit.
• Drill Ø4.0mm screw holes in the front panel at the 4 locations shown at the right.
(Be sure to remove the front panel before drilling the holes.Otherwise, the heat exchanger and electrical components could be damaged if the drill bit travels too far into the unit).

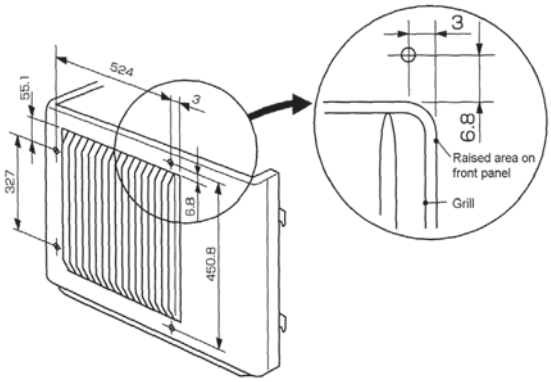

For 710(W)x540(H)x255(D) outdoor units
• Remove the front panel from the outdoor unit.
• Drill Ø4.0mm screw holes in the front panel at the 4 locations shown at the right.
(Be sure to remove the front panel before drilling the holes.Otherwise, the heat exchanger and electrical components could be damaged if the drill bit travels too far into the unit).

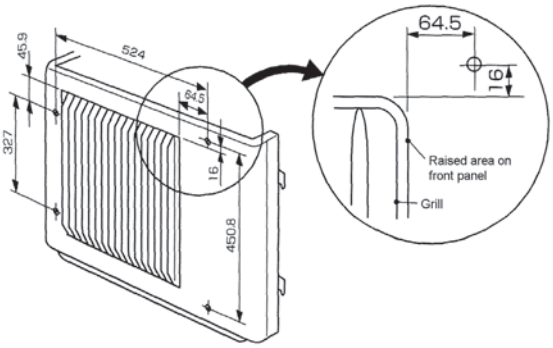

OPTIONAL PARTS

For 800(W)x600(H)x300(D) outdoor units
• Remove the front panel from the outdoor unit.
• Drill Ø4.0mm screw holes in the front panel at the 4 locations shown at the right.
(Be sure to remove the front panel before drilling the holes.Otherwise, the heat exchanger and electrical components could be damaged if the drill bit travels too far into the unit).

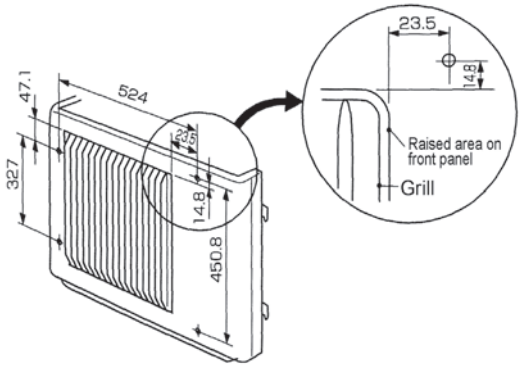

For 684(W)x540(H)x255(D) outdoor units
• Peel off the trademark.
• Remove the front panel from the outdoor unit.
• Drill Ø4.0mm screw holes in the front panel at the 4 locations shown at the right.
(Be sure to remove the front panel before drilling the holes.Otherwise, the heat exchanger and electrical components could be damaged if the drill bit travels too far into the unit).

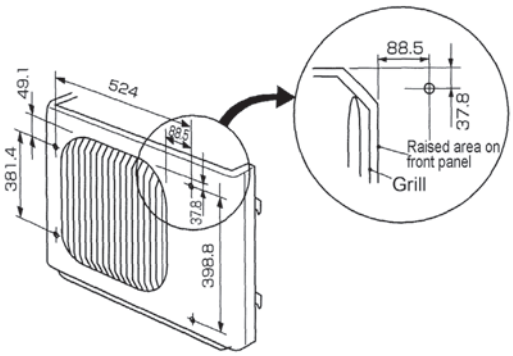

2. Installation to the unit

• Install the front panel to the outdoor unit.
• Install the air outlet guide to the outdoor unit using the4 included screws.*
(Install the guide so that the air will be directed upward.)
*For 684(W)x540(H)x255(D) outdoor units, use oval holes for the upper right and lower left holes.
• Affix the trademark (for 684(W)x540(H)x255(D) outdoor units).
Affix the included trademark at the location of the stamped marks shown at the right.

Note

• Be sure to securely tighten the screws.Otherwise, a chattering sound could be produced due to vibration if the screws are loose.

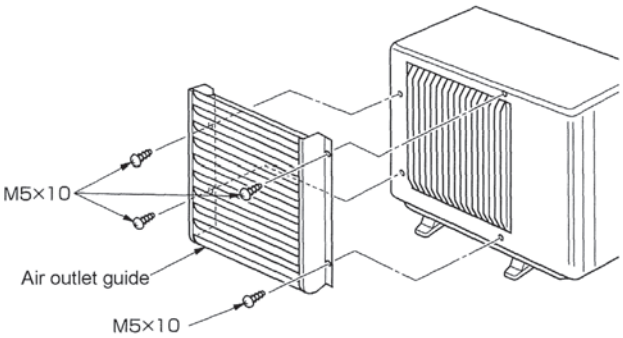

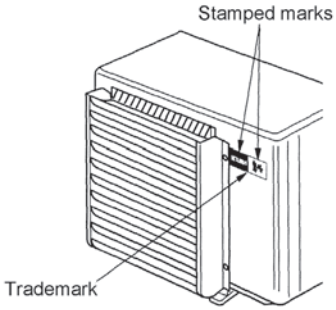

Air Outlet Guide

MAC-856SG

Photo

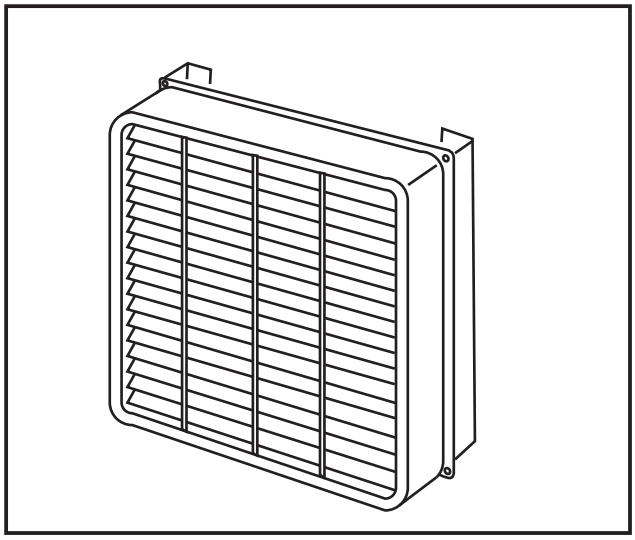

Descriptions

A part to change air direction from outdoor unit.
Can also be used to prevent short cycles.

Applicable Models

- MXZ-3A54VA
- MXZ-4A71VA
- MXZ-4A80VA
- MXZ-5A100VA

Specifications

Exterior	Color (Munsell)	Ivory (3.0Y7.8/1.1)
	Material	Air outlet grille: PP resin
Air outlet direction		Changeable between up and down
Accessory name × Qty. <Material/Surface treatment>		Support A × 2 (Alloy hot-dip zinc-coated carbon steel sheet / Acrylic resin coating) Support B × 2 (Alloy hot-dip zinc-coated carbon steel sheet / Acrylic resin coating) Screw (5×10) × 14 (Iron/Zinc nickel alloy plated)

Dimensions

Unit : mm

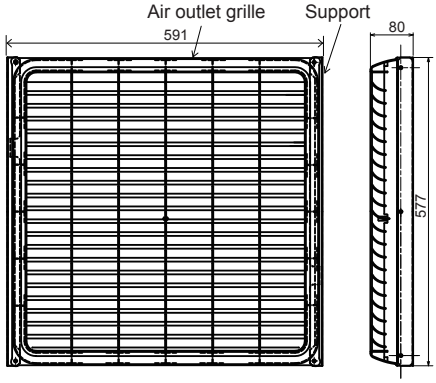

Components

① Air outlet guide ×1	② Support A ×2	③ Support B ×2	④ Screw 5×10 ×14
	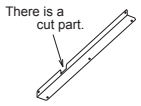		

How to Use / How to Install

1) Remove 4 fixing screws of the grille.
Note) Do not remove the grille.

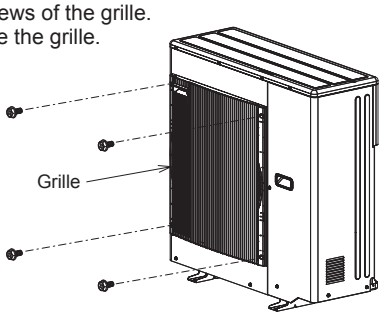

2) Insert the support A between the product and the grille, and reinstall the screws that removed in 1).

Note) Support A for right side and left side are identical with each other. The side which has 2 holes should face the product, and the other side which has 3 holes faces the outside.

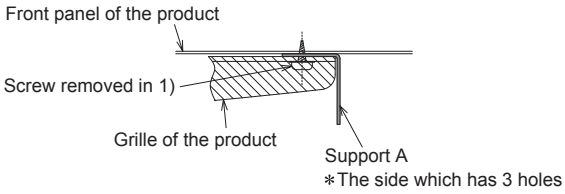

3) Fix the support B to the support A with 3 screws (5×10) on each right and left side.

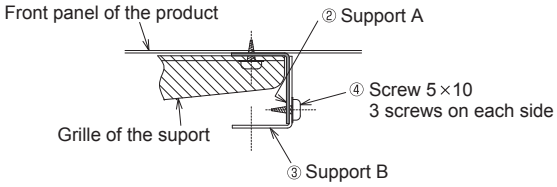

4) Fix the air outlet guide to the support B with 4 screws 5 × 10.
∗ The directons of the air outlet can be selected from 4 directions, up, down, left, and right. Choose the appropriate direction according to the installation environment.

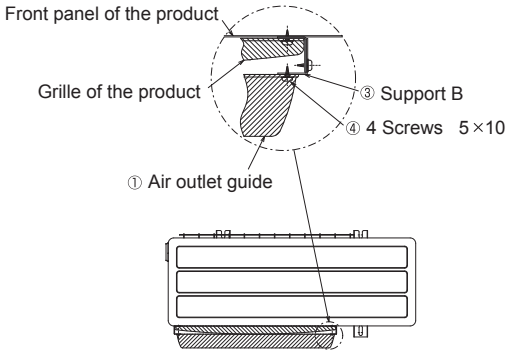

OPTIONAL PARTS

Air Outlet Guide (to change air blowing direction) PAC-SG58SG-E

Photo

Descriptions

A part to change air direction from outdoor unit. Can also be used to prevent short cycles.

Applicable Models

■ PUHZ-RP35/50

only 1 piece required

Specifications

Exterior	Color (Munsell)	Ivory (3.0Y 7.8/1.1)
	Material	Air outlet grille: PP resin
Weight		2.0kg
Air outlet direction		Changeable between up, down or sideways
Accessory name x Qty. <Material/Surface treatment>		Support x 4 (Alloy hot-dip zinc-coated carbon steel sheet / Acrylic resin coating)
		Screw (M5x10) x 4 (Iron/Zinc nickel alloy plated) Screw (M4x10) x 8 (Iron/Zinc nickel alloy plated)

Dimensions

Unit : mm

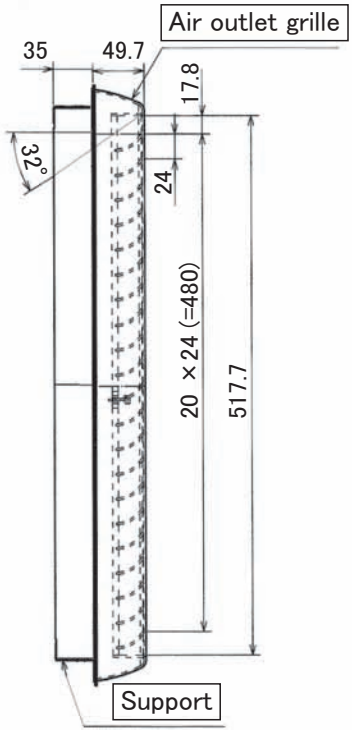

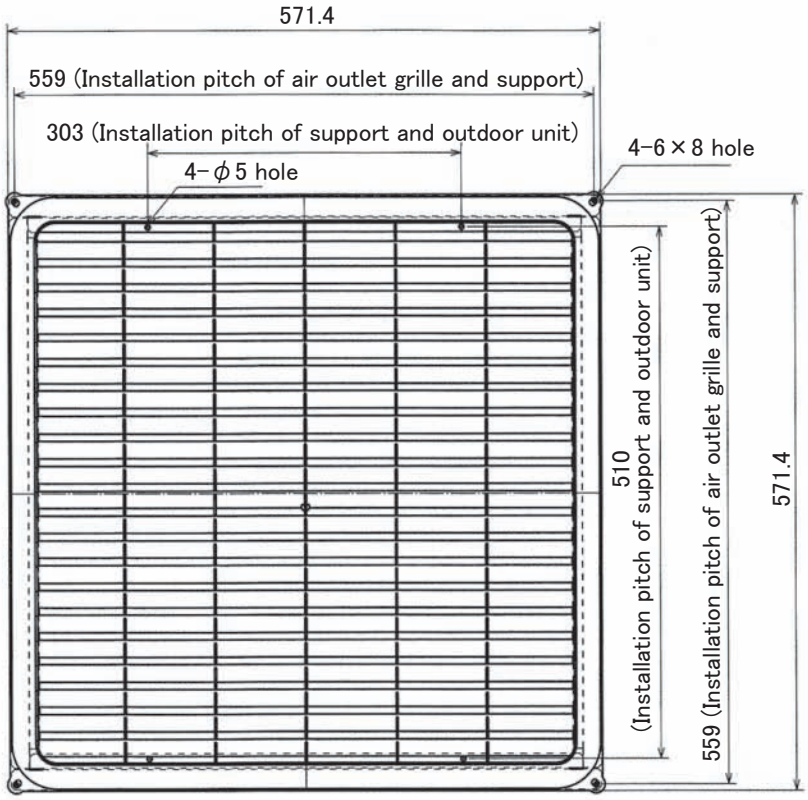

⚠ CAUTION

* Air Guide prevents reverse rotation of outdoor unit fan when it enters low speed rotation mode with fan controller being operated. It is also used for protection of fan when strong winds, such as a typhoon, wind blowing through tall buildings, etc., directly strike the air outlet. In addition, installation of this product is necessary when cooling opetation is to be performed in outdoor tempreture of -5℃ or lower (down to -15℃).

Note the followings when installing this guide:

1) Be sure not to use "upward discharge" in a place where snowing is possible. Snow may accumulate in the guard, which could damage the fan, etc.
2) Attaching this unit will decrease the performance (by 2-3%) and increase noise from outdoor unit (by approx. 1-2 dB).
3) Do not use "upward discharge" when there are any obstacles at the back and on both sides of outdoor unit (air is taken in from top of unit): This could cause a short cycle.
4) To eliminate the influence of external wind, be sure to install the unit with its back facing to wall.
5) Do not install this unit in a place where wind directly blows to the back of the unit.

How to Use / How to Install

Note that two sets of this product are necessary for RP100, RP125, RP140.

1 Checking provided parts

Make sure that you have the following parts

①Air Discharge guide × 1	②Support × 2 (For the upper and lower sides)	③Support × 2 (For right and left)	④Attachment screw × 4	⑥Spacer × 4
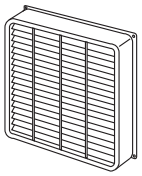	※PAC-SG58SG-E (Screw hole × 6) 	PAC-SG58SG-E (Screw hole × 2) 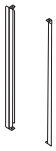	PAC-SG58SG-E(5 × 10) PAC-SG59SG-E(5 × 35)  ⑤Attachment screw × 8 PAC-SG58SG-E(4 × 10) 	※PAC-SG59SG-E 

2 Checking Installation Space

(In the following diagrams, dimensions in parentheses are for RP4 and higher number models. Dimensions not in parentheses are common for all series models. Unit: mm)

●Secure the necessary surrounding space shown below and select a place with less obstacles, to prevent a short cycle.

1) Surrounding space needed when installing one unit

・Do not use "upward discharge" in cases of figures (3) and (5) below.

(1) Obstacle at front (open at back, sides and top)

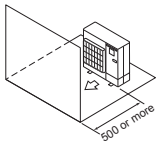

(2) Obstacles at back and front (open at sides and top)

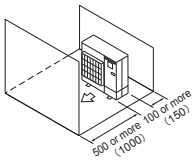

(3) Obstacles at back and top (open at front and sides)

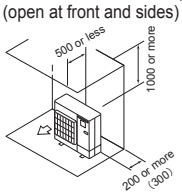

(4) Obstacles at back, and sides (open at front and top)

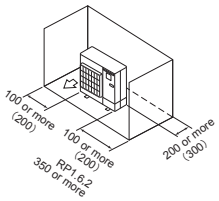

(5) Obstacles at back, sides and top (open at front)

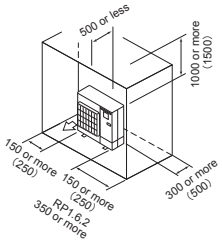

2) Surrounding space needed when installing multiple units

・When installing units horizontally in a series, leave at least 350 mm space between units for 56-type or lower models, and at least 10 mm for 63-type or higher models.

・Do not use "upward discharge" in case of figure (3) below.

(1) Obstacle at front (open at back, sides and top)

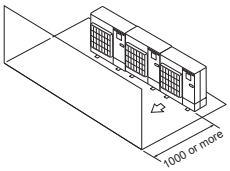

(2) Obstacles at back and front (open at sides and top)

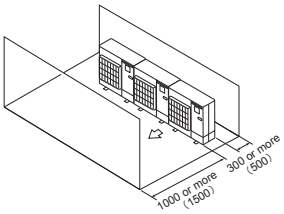

(3) Obstacles at back and top (open at front and sides)

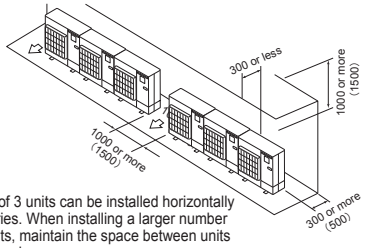

※Limit of 3 units can be installed horizontally in series. When installing a larger number of units, maintain the space between units shown above.

(4) Installing units, one in each row

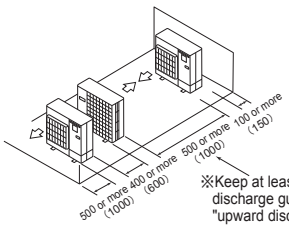

discharge

※Keep at least 1000 (2000) when using discharge guide in directions other than "upward discharge".

(5) Installing multiple units in multiple rows

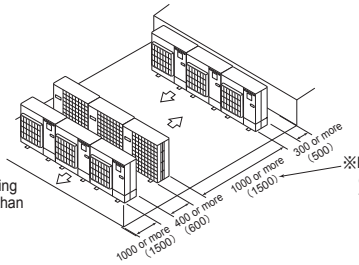

※Keep at least 2000 (3000) when using discharge guide in directions other than "upward discharge".

OPTIONAL PARTS

3 Installation Complete Diagrams

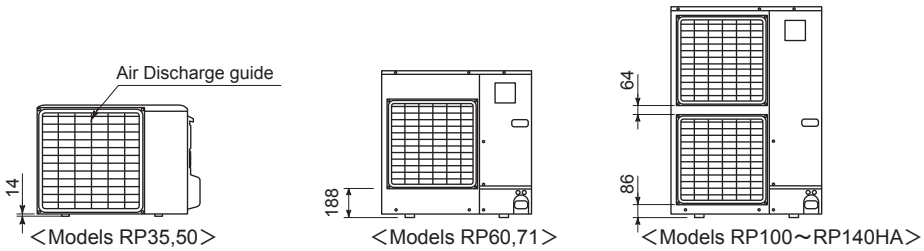

4 Installation Method

For RP1.6 or 2:
1) Fix the two supports (2) and two supports (3), using four screws (5) to make a frame.
2) Attach the assembled supports to the outdoor unit using four screws (5), and then attach blowout guide (1) to the support (2), using four screws (4).
・Four blowout directions can be selected: Check the orientation of blowout vane, and attach the blowout guide in the direction that matches the situation at local site.

For RP2.5 - 6: (Two sets of support and blowout guide are necessary for two-fan type models.)
1) Remove the 4 screws that hold the existing fan guard.
2) Fit the 4 spacers⑥ into the hole in fan guard, and then use the 4 screws④ to install the provided blowout guide① to the outdoor unit above the existing fan guard.
・The four blowout directions can be selected: Check the orientation of blowout vane, and install the blowout guide in the direction that matches the circumstance at local site. (Two sets of fan guide are necessary for RP4 and higher models.)

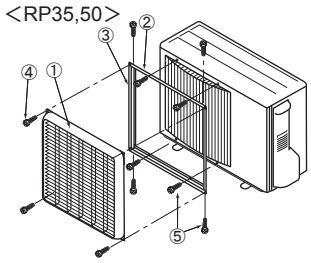

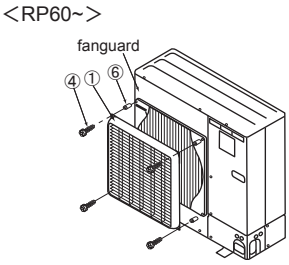

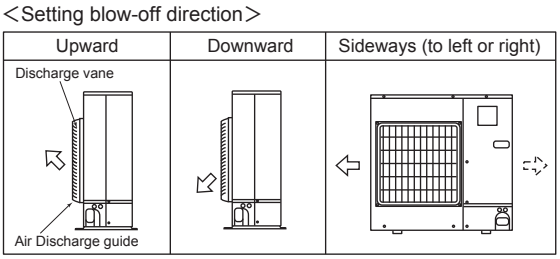

OPTIONAL PARTS

Air Outlet Guide (to charge air blowing direction) PAC-SG59SG-E

Photo

Descriptions

A part to change air direction from outdoor unit. Can also be used to prevent short cycles.

Applicable Models

- MXZ-8A140VA
  2 pieces required
- PUHZ-RP60/71
  only 1 piece required
- PUHZ-P100
  only 1 piece required
- PUHZ-P125-250
  2 pieces required
- PUHZ-HRP71/100/125
  2 pieces required
- PU(H)-P71/100
  only 1 piece required
- PU(H)-P125/140
  2 pieces required

Specifications

Exterior	Color (Munsell)	Ivory (3.0Y 7.8/1.1)
	Material	Air outlet grille: PP resin
Weight		1.2kg
Air outlet direction		Changeable between up, down or sideways
Accessory name x Qty. <Material/Surface treatment>		Washer faced screw (M5x35) x 4 (Iron wire (SWCH18A)/Zinc nickel plated)

Dimensions

Unit : mm

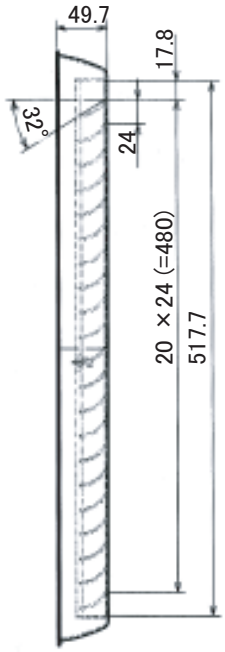

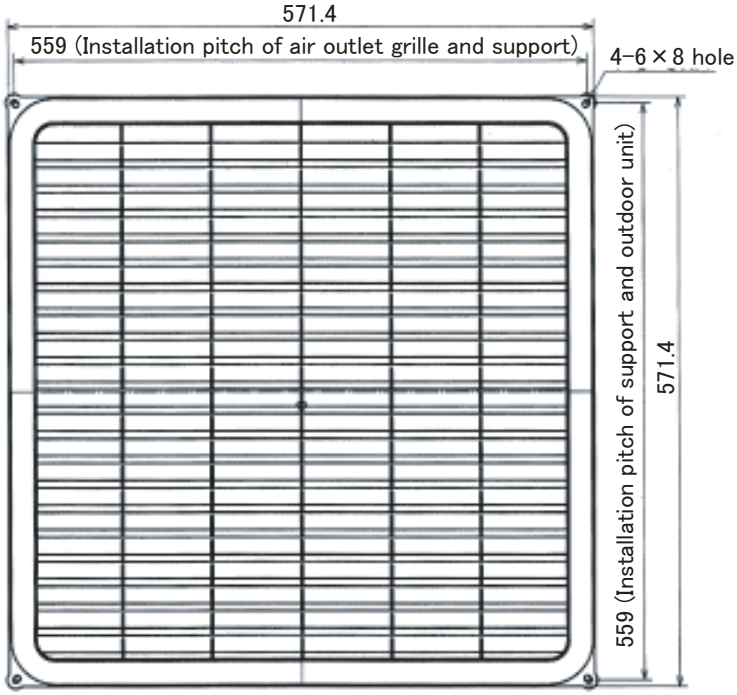

⚠ CAUTION

* Air Guide prevents reverse rotation of outdoor unit fan when it enters low speed rotation mode with fan controller being operated. It is also used for protection of fan when strong winds, such as a typhoon, wind blowing through tall buildings, etc., directly strike the air outlet. In addition, installation of this product is necessary when cooling opetation is to be performed in outdoor tempreture of -5℃ or lower (down to -15℃).

Note the followings when installing this guide:
1) Be sure not to use "upward discharge" in a place where snowing is possible. Snow may accumulate in the guard, which could damage the fan, etc.
2) Attaching this unit will decrease the performance (by 2-3%) and increase noise from outdoor unit (by approx. 1-2 dB).
3) Do not use "upward discharge" when there are any obstacles at the back and on both sides of outdoor unit (air is taken in from top of unit): This could cause a short cycle.
4) To eliminate the influence of external wind, be sure to install the unit with its back facing to wall.
5) Do not install this unit in a place where wind directly blows to the back of the unit.

How to Use / How to Install

2-fan type outdoor unit

1 Checking provided parts

Make sure that this package has the following parts as well as the installation sheet:

①Air Discharge guide × 1	②Support × 2 (For the upper and lower sides)	③Support × 2 (For right and left)	④Attachment screw × 4	⑥Spacer × 4
	※PAC-SG58SG-E (Screw hole × 6)	PAC-SG58SG-E (Screw hole × 2)	PAC-SG58SG-E(5 × 10) PAC-SG59SG-E(5 × 35)	※PAC-SG59SG-E
			⑤Attachment screw × 8	
			PAC-SG58SG-E(4 × 10)	

2 Checking Installation Space

(In the following diagrams, dimensions in parentheses are for 2 fan type models. Dimensions not in parentheses are common for all series models. Unit: mm)

●Secure the necessary surrounding space shown below and select a place with less obstacles, to prevent a short cycle.

1) Surrounding space needed when installing one unit

・Do not use "upward discharge" in cases of figures (3) and (5) below.

(1) Obstacle at front (open at back, sides and top)

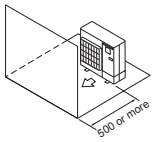

(2) Obstacles at back and front (open at sides and top)

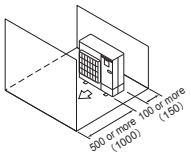

(3) Obstacles at back and top (open at front and sides)

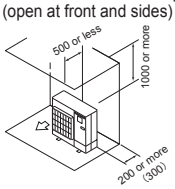

(4) Obstacles at back, and sides (open at front and top)

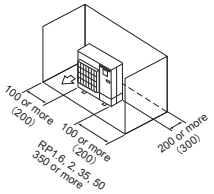

(5) Obstacles at back, sides and top (open at front)

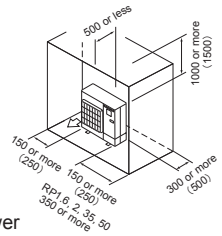

2) Surrounding space needed when installing multiple units

・When installing units horizontally in a series, leave at least 350 mm space between units for RP2, 50 type or lower models, and at least 10 mm for RP2.5, 60 type or higher models.

・Do not use "upward discharge" in case of figure (3) below.

(1) Obstacle at front (open at back, sides and top)

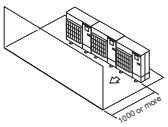

(2) Obstacles at back and front (open at sides and top)

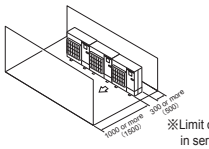

※Limit of 3 units can be installed horizontally in series. When installing a larger number of units, maintain the space between units shown above.

(3) Obstacles at back and top (open at front and sides)

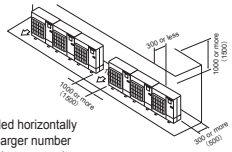

(4) Installing units, one in each row

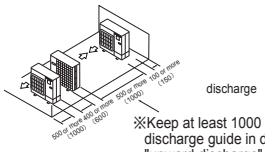

※Keep at least 1000 (2000) when using discharge guide in directions other than "upward discharge".

(5) Installing multiple units in multiple rows

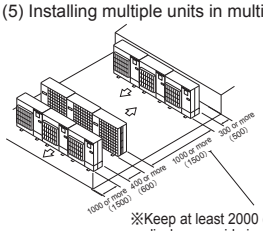

※Keep at least 2000 (3000) when using discharge guide in directions other than "upward discharge".

3 Installation Complete Diagrams

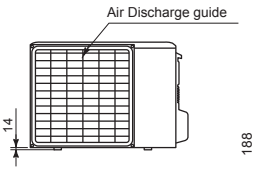

＜Models RP1.6, 2, 35, 50＞

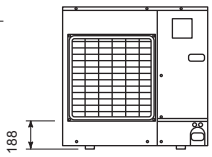

＜Models RP2.5, 3, 60, 71＞

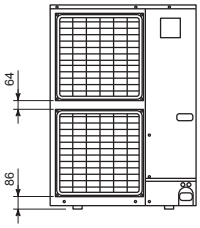

＜Models RP4～6,100～140＞

4 Installation Method

For RP1.6, 2, 35, 50：

1) Fix the two supports (2) and two supports (3), using four screws (5) to make a frame.
2) Attach the assembled supports to the outdoor unit using four screws (5), and then attach blowout guide (1) to the support (2), using four screws (4).
   ・Four blowout directions can be selected: Check the orientation of blowout vane, and attach the blowout guide in the direction that matches the situation at local site.

For (R)P2.5～6, 60～140: (Two sets of support and blowout guide are necessary for two-fan type models.)

1) Remove the 4 screws that hold the existing fan guard.
2) Fit the 4 spacers⑥ into the hole in fan guard, and then use the 4 screws④ to install the provided blowout guide① to the outdoor unit above the existing fan guard.
   ・The four blowout directions can be selected: Check the orientation of blowout vane, and install the blowout guide in the direction that matches the circumstance at local site.

＜RP1.6, 2, 35, 50＞

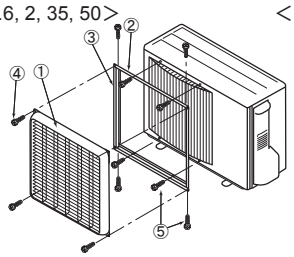

＜(R)P2.5～6, 60～140＞

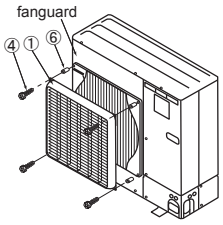

＜Setting blow-off direction＞

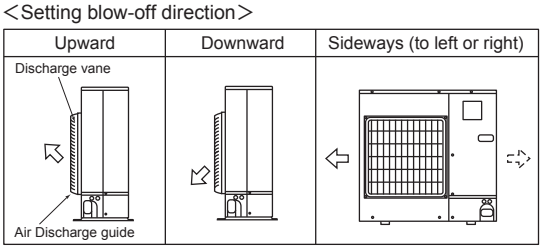

OPTIONAL PARTS

Air Outlet Guide (to charge air blowing direction) PAC-SH96SG-E

Figure

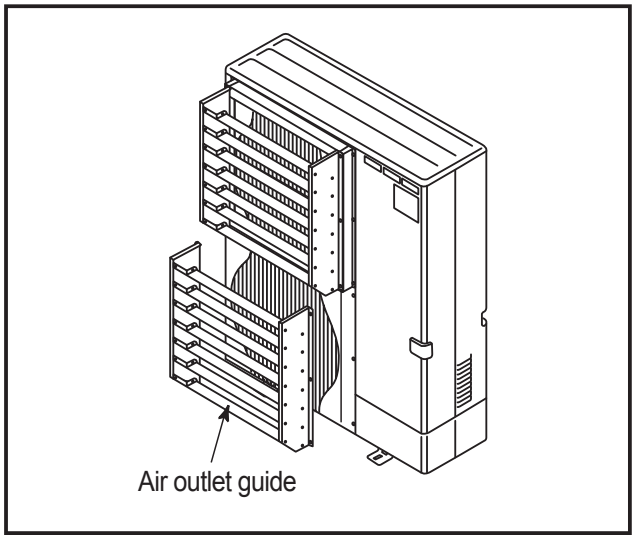

Descriptions

A part to change air direction from outdoor unit. Can also be used to prevent short cycles.

Applicable Models

■ PUHZ-RP100~250KA

2 pieces required

Specifications

Exterior	Color (Munsell)	Ivory (3.0Y 7.8/1.1)
	Material	Air outlet grille: Alloy hot-dip zinc-coated carbon steel sheet
Weight		7kg
Air outlet direction		Changeable between up, down or sideways
Accessory name x Qty. <Material/Surface treatment>		Washer faced screw (M5x15) x 12 (Iron wire (SWCH18A)/Zinc nickel plated) Washer x 12, Spring washer x 12

Dimensions

Unit : mm

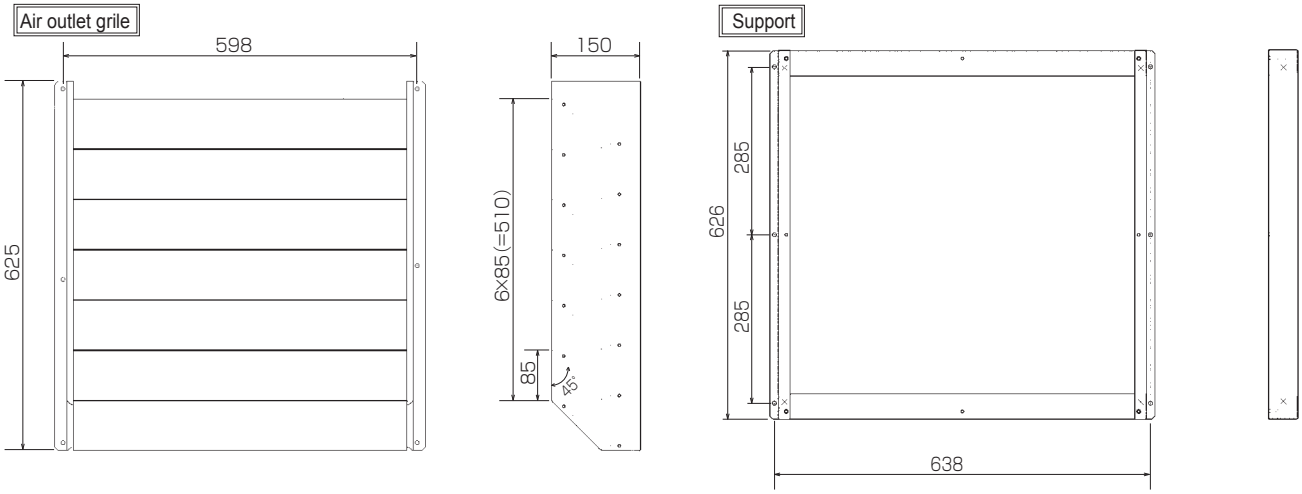

⚠ CAUTION

* Air Guide prevents reverse rotation of outdoor unit fan when it enters low speed rotation mode with fan controller being operated. It is also used for protection of fan when strong winds, such as a typhoon, wind blowing through tall buildings, etc., directly strike the air outlet. In addition, installation of this product is necessary when cooling opetation is to be performed in outdoor tempreture of -5℃ or lower (down to -15℃).

Note the followings when installing this guide:

1) Be sure not to use "upward discharge" in a place where snowing is possible. Snow may accumulate in the guard, which could damage the fan, etc.
2) Attaching this unit will decrease the performance (by 2-3%) and increase noise from outdoor unit (by approx. 1-2 dB).
3) Do not use "upward discharge" when there are any obstacles at the back and on both sides of outdoor unit (air is taken in from top of unit): This could cause a short cycle.
4) To eliminate the influence of external wind, be sure to install the unit with its back facing to wall.
5) Do not install this unit in a place where wind directly blows to the back of the unit.

How to Use / How to Install

2-fan type outdoor unit

1 Checking provided parts

Make sure that this package has the following parts as well as the installation sheet:

①Air Discharge guide	1	②Support	1	③Screw(5×15)	12	④Washer	12	⑤Spring washer	12
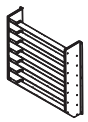		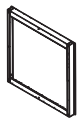							

2 Checking Installation Space (Unit: mm)

●Secure the necessary surrounding space shown below and select a place with less obstacles, to prevent a short cycle.

1) Surrounding space needed when installing one unit

・Do not use "upward discharge" in cases of figures (3) and (5) below.

(1) Obstacle at front (open at back, sides and top)

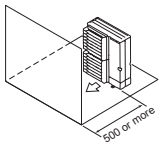

(2) Obstacles at back and front (open at sides and top)

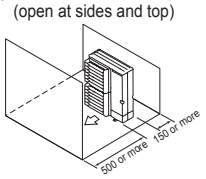

(3) Obstacles at back and top (open at front and sides)

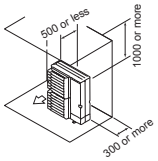

(4) Obstacles at back, and sides (open at front and top)

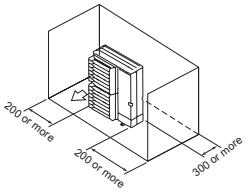

(5) Obstacles at back, sides and top (open at front)

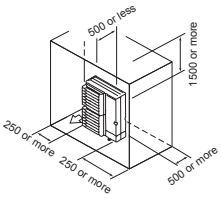

2) Surrounding space needed when installing multiple units

・When installing units horizontally in a series, leave at least 10 mm space between units.

・Do not use "upward discharge" in case of figure (3) below.

(1) Obstacle at front (open at back, sides and top)

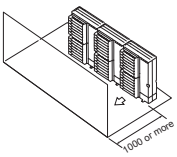

(2) Obstacles at back and front (open at sides and top)

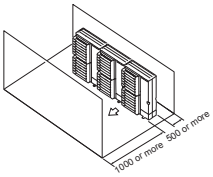

(3) Obstacles at back and top (open at front and sides)

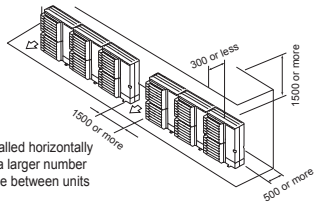

※Limit of 3 units can be installed horizontally in series. When installing a larger number of units, maintain the space between units shown above.

(1) Installing units, one in each row

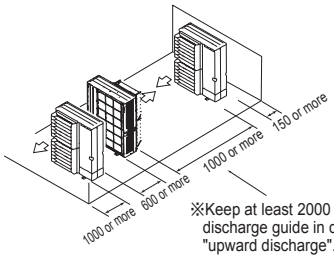

※Keep at least 2000 when using discharge guide in directions other than "upward discharge".

(2) Installing multiple units in multiple rows

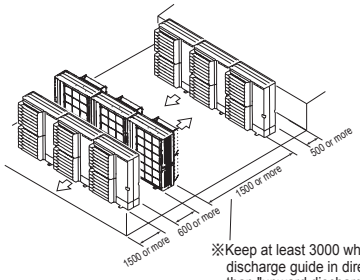

※Keep at least 3000 when using discharge guide in directions other than "upward discharge".

3 Installation Method

・4 blowout directions can be selected: Check the orientation of blowout vane, and attach the blowout guide in the direction that matches the situation at local site.

(1)Attach the support ② to the outdoor unit using the washers ④ , spring washers ⑤ and screws ③ (at the 6 points) on the existing fan guard

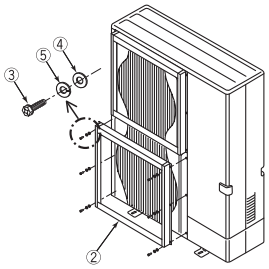

(2)Set the orientation of the blowout vane of the discharge guide ① to the desired direction and install the vane to the outdoor unit using the washers ④, spring washers ⑤ and screws ③ (at 6 points).

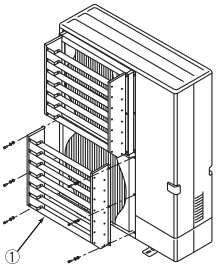

＜Setting blow-off direction＞

Upward	Downward	Sideways (to left or right)
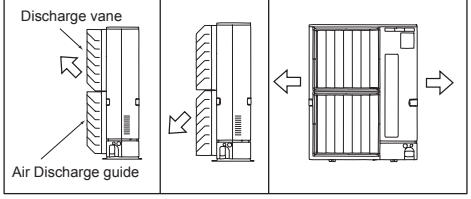		

OPTIONAL PARTS

Air Protect Guide (for cooling at -15℃) PAC-SG56AG-E

Photo

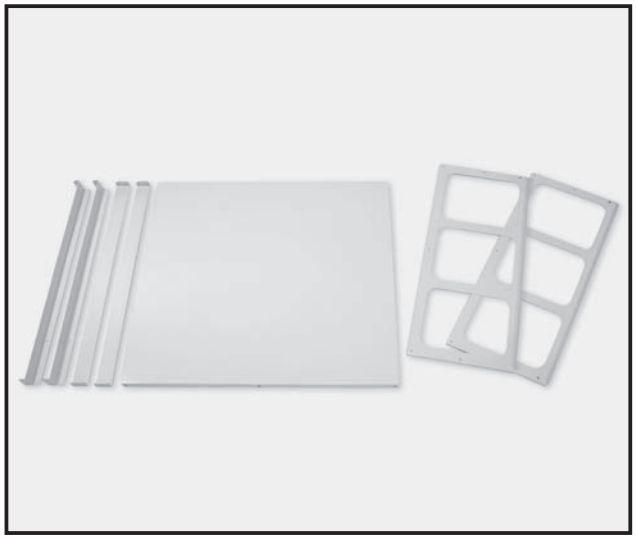

Descriptions

Enables operation even when the outside temperature is low.
Protect the unit from cold wind.

Applicable Models

■ PUHZ-RP35/50
only 1 piece required

Specifications

Exterior	Color (Munsell)	Ivory (3.0Y 7.8/1.1)
	Surface treatment	Acrylic resin coating
	Material	Alloy hot-dip zinc-coated carbon steel sheet
Weight		3.4kg
Accessory name x Qty. <Material/Surface treatment>		Washer faced screw (M4x10) x 18 <SUS410/Passivated>

Dimensions

Unit : mm

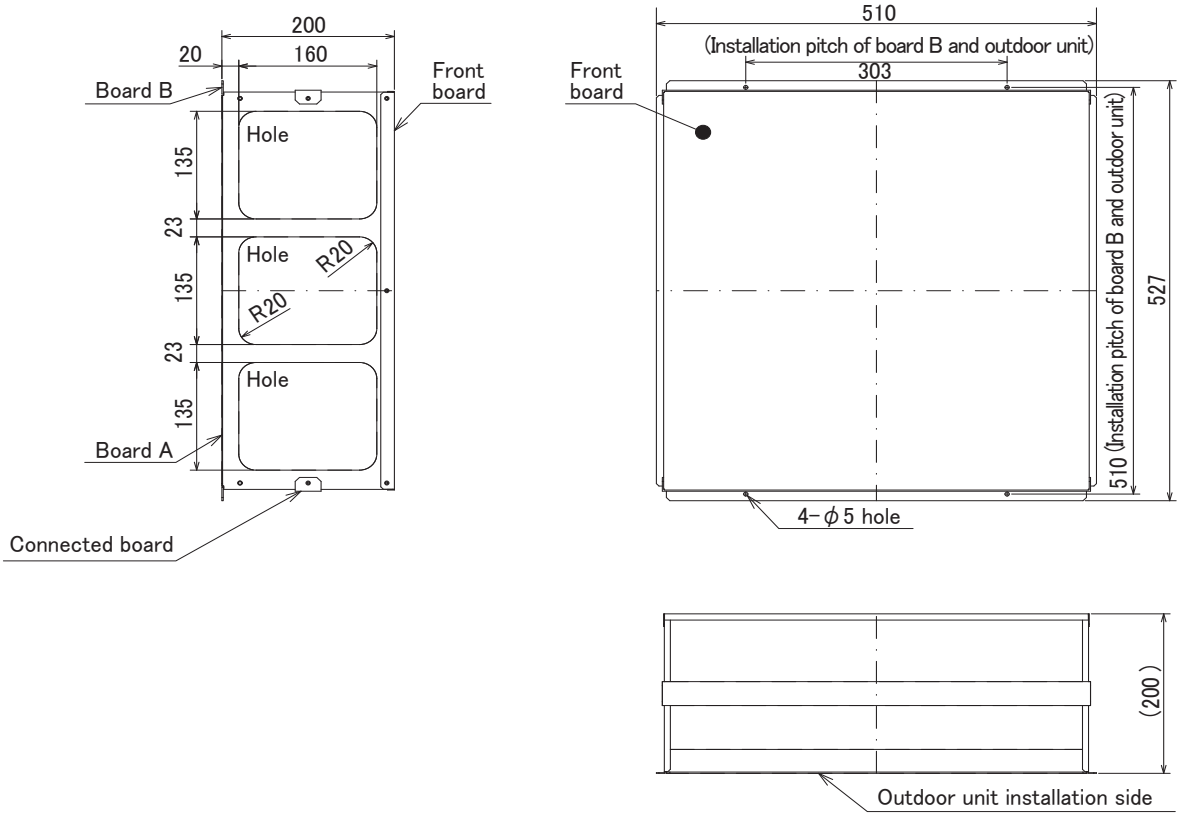

⚠ CAUTION

* Air Guide prevents reverse rotation of outdoor unit fan when it enters low speed rotation mode with fan controller being operated. It is also used for protection of fan when strong winds, such as a typhoon, wind blowing through tall buildings, etc., directly strike the air outlet. In addition, installation of this product is necessary when cooling opetation is to be performed in outdoor tempreture of -5℃ or lower (down to -15℃).

Note the followings when installing this guide:
1) Be sure not to use "upward discharge" in a place where snowing is possible. Snow may accumulate in the guard, which could damage the fan, etc.
2) Attaching this unit will decrease the performance (by 2-3%) and increase noise from outdoor unit (by approx. 1-2 dB).
3) Do not use "upward discharge" when there are any obstacles at the back and on both sides of outdoor unit (air is taken in from top of unit): This could cause a short cycle.
4) To eliminate the influence of external wind, be sure to install the unit with its back facing to wall.
5) Do not install this unit in a place where wind directly blows to the back of the unit.

How to Use / How to Install

For 2-fan type outdoor unit, two pieces are required.

1 Checking parts

Make sure that all the following parts, in addition to this manual, are in this box:

① Front plate	1	② Side plate	2	③ Side plate	2	④ Connecting plate	2	⑤Mounting screw 5 × 3 5	4	⑦ Spacer	4	⑨Washer (for screw ⑤)	4
				※Only for PAC-SG56AG-E				※Only for PAC-SG57AG-E		※**Only for PAC-SG57AG-E**		※Only for PAC-SG57AG-E	
								⑥Mounting screw 4 × 1 0		⑧Mounting screw 4 × 1 2		⑩Washer (for screw ⑧)	
								For PAC-SG56AG-E	1 4		4		4
								For PAC-SG57AG-E	6				

2 Requirements of space for installation

（1）**One unit installation:**

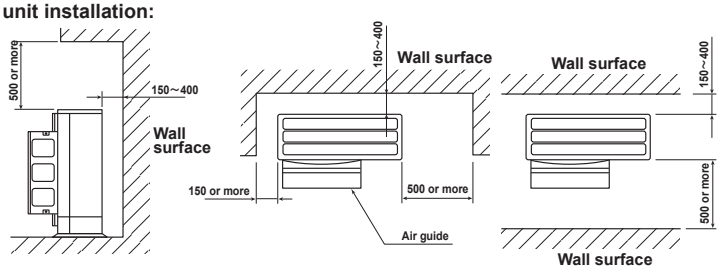

（2）**Multiple unit installation:** **※Installation of multiple units in series must be no more than five units.**

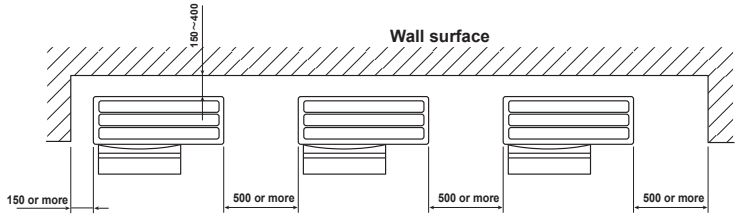

3 Installation procedure

For RP1.6, 2, 35, 50

（1）②　⑥　③

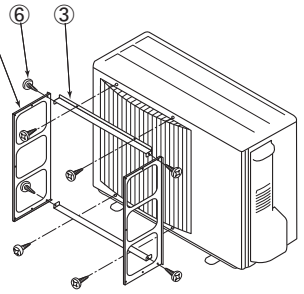

●**Fix side plates ② and ③ (two each) using four screws ⑥ and attach them to outdoor unit using holes on side plate ③.**

（2）⑧⑩④

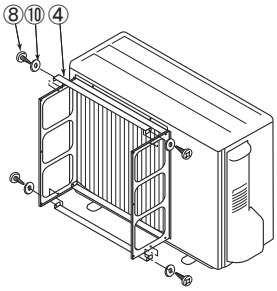

●**Attach two connecting plates ④ to side plate ②, using four screws ⑧ with four washers ⑩.**

（3）⑥　①

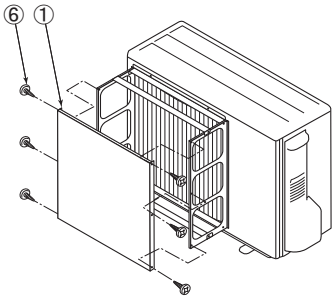

●**Attach front plate ① to side plate ②, using six screws ⑥.**

For other models:

（1）⑤⑨②⑦

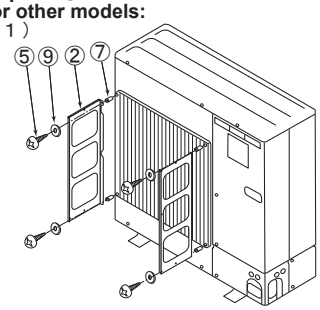

●**For RP2.5～6, 60～140, remove the four screws securing fan guard from its circumference.**
●**Attach two side plates ② to outdoor unit using four screws ⑤.**

（2）⑧⑩④

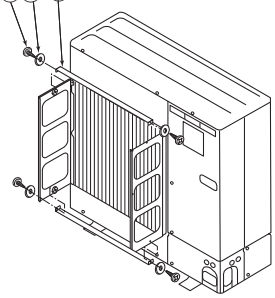

●**Attach two connecting plates ④ to side plate ②, using four screws ⑧ with four washers ⑩.**

（3）⑥　①

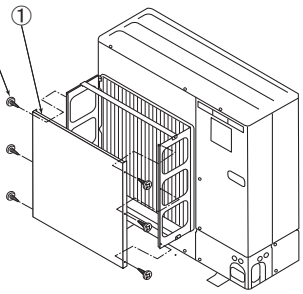

●**Attach front plate ① to side plate ②, using six screws ⑥.**

Air Protect Guide (for cooling at -15℃) PAC-SH63AG-E *

* model change from **PAC-SG57AG-E** from Sep 2005

Photo

Descriptions

Enables operation even when the outside temperature is low.
Protect the unit from cold wind.

Applicable Models

- PUHZ-RP60/71 — only 1 piece required
- PUHZ-HRP71/100/125 — 2 pieces required
- PUHZ-P100 — only 1 piece required
- PU(H)-P71/100 — only 1 piece required
- PUHZ-P125-250 — 2 pieces required
- PU(H)-P125/140 — 2 pieces required

Specifications

Exterior	Color (Munsell)	Ivory (3.0Y 7.8/1.1)
	Surface treatment	Acrylic resin coating
	Material	Alloy hot-dip zinc-coated carbon steel sheet
Weight		3.3kg
Accessory name x Qty. <Material/Surface treatment>		Washer faced screw (M5x15) x 4 <Iron wire (SWCH18A)/Zinc nickel plated>

Dimensions

Unit : mm (inch)

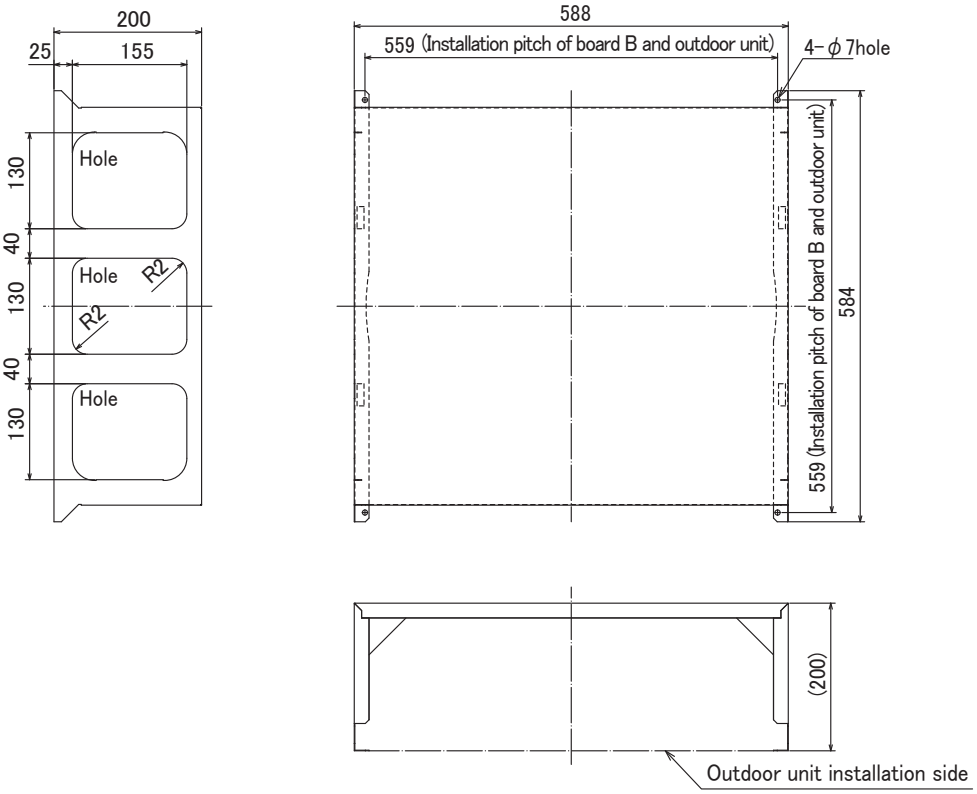

⚠ CAUTION

* Air Guide prevents reverse rotation of outdoor unit fan when it enters low speed rotation mode with fan controller being operated. It is also used for protection of fan when strong winds, such as a typhoon, wind blowing through tall buildings, etc., directly strike the air outlet. In addition, installation of this product is necessary when cooling opetation is to be performed in outdoor tempreture of -5℃ or lower (down to -15℃).

Note the followings when installing this guide:
1) Be sure not to use "upward discharge" in a place where snowing is possible. Snow may accumulate in the guard, which could damage the fan, etc.
2) Attaching this unit will decrease the performance (by 2-3%) and increase noise from outdoor unit (by approx. 1-2 dB).
3) Do not use "upward discharge" when there are any obstacles at the back and on both sides of outdoor unit (air is taken in from top of unit): This could cause a short cycle.
4) To eliminate the influence of external wind, be sure to install the unit with its back facing to wall.
5) Do not install this unit in a place where wind directly blows to the back of the unit.

How to Use / How to Install

Package air-conditioner Optional parts
Installation Manual for Air Guide

Always observe for safety

●Carefully read this section 「Always observe for safety」, and securely install the optional parts.
●Be sure to observe the cautions described here: They include critical contents for safety.
●The following indications show the classifications for danger, and possible consequences following incorrect handling.

⚠WARNING	Incorrect handling could lead to death or serious injury.
⚠CAUTION	Incorrect handling could lead to injury or damage to house and household articles.

●After installation, perform a test run and make sure that there is no abnormality, and ask your customer to keep this installation sheet with the instruction manual at all times. Also ask the customer to transfer these manuals to a new user if the user changes.

⚠WARNING

Ask the dealer or specialist for installation.
●If installed incorrectly by user, water leak, electric shock, fire, etc. could result.

Carefully install the panel according to this installation sheet.
●Incorrect installation could cause water leak, electric shock, fire, etc.

Before performing installation (moving) and electrical work

⚠CAUTION

Do not place polyethylene bags in reach of young children.
●Putting them over the head will block breathing passages, which could result in suffocation.

If electrical work is necessary, use only specified electric wires adapted with current capacity.
●Use of unsuitable wire could cause electric leak, overheating or fire.

Securely apply heat-insulation to refrigerant pipe so that no condensation occurs.
●If heat-insulation is inadequate, condensation could occur on the surface of pipes and dewdrops could accumulate on ceiling, floor or important goods.

Securely perform drain piping work according to the installation manual so that no condensation occurs.
●If piping work is incorrect, water leak may occur and ceiling, furniture, etc may get wet.

This Air Guide prevents reverse rotation of outdoor unit fan when it enters low speed rotation mode with fan controller being operated. It is also used for protection of fan when strong winds, such as in a typhoon, wind blowing through tall buildings, etc., directly strike the at air outlet.
In addition, installation of this product is necessary when cooling operation is to be performed in outside-air temperature of −5℃ or lower (down to −15℃).
Pay attention to the following points when installing this product:
1) To eliminate the effects of external wind, be sure to install this unit with back surface facing wall side.
2) Do not install this unit in orientation or site where wind directly blows at the back of the unit.
3) Installing of this product will reduce the capacity of the unit (approx. 2 or 3%) and increase the noise of outdoor unit (approx. 1 or 2dB).
4) Do not use this product where there is any obstacle at either side or above the outdoor unit (discharged air will be blocked). This may cause a short cycle.

When 2-fan type outdoor unit is used, note that two sets of this product will be necessary.

1 Checking parts

Make sure that all the following parts, in addition to this manual, are in this box:

①Air Guide	1	②Mounting screw 5×15	4	③Washer	4	④Spring washer	4
		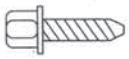					

OPTIONAL PARTS

2 Requirements of space for installation

(1) One unit installation:

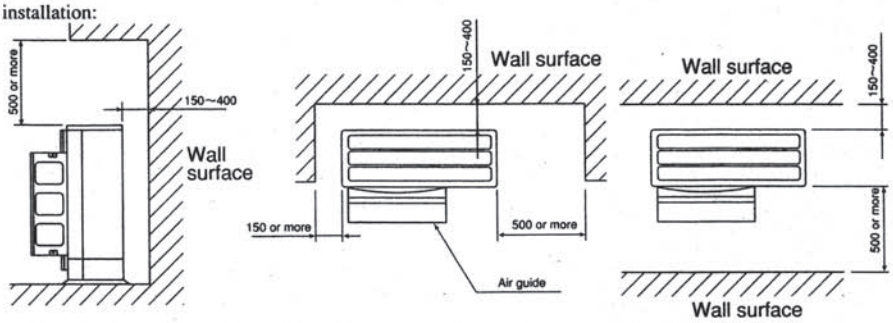

(2) Multiple unit installation: ※Installation of multiple units in series must be no more than five units.

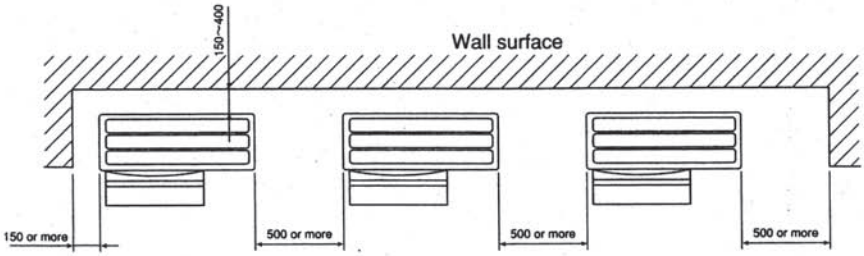

3 Installation procedure

(1) Remove the fan guard fixing screws (five screws on circumference), and then remove the fan guard.

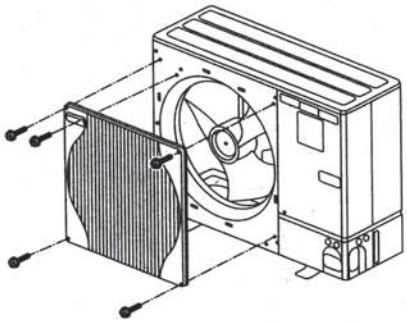

(2) Insert the fan guard stoppers into the square holes on the air guide.

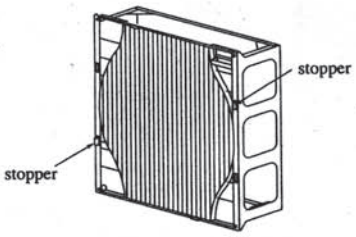

(3) Insert the stoppers (four locations) of the fan guard into the installation holes on the outdoor unit.

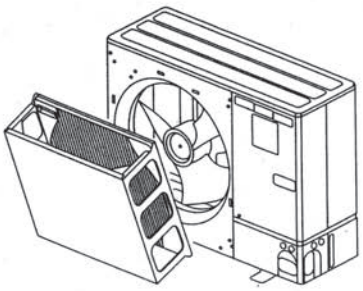

(4) Install the air guide on the outdoor unit using washers (3), spring washers (4) and screws (2).
* Use existing screws for handle section.

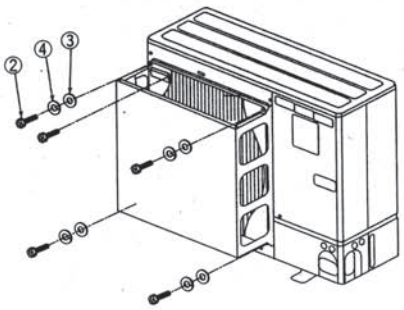

OPTIONAL PARTS

Air Protect Guide (for cooling at -15℃) PAC-SH95AG-E

Photo

Descriptions

Enables operation even when the outside temperature is low.
Protect the unit from cold wind.

Applicable Models

■ PUHZ-P100/125/140/200/250KA

2 pieces required

Specifications

Exterior	Color (Munsell)	Ivory (3.0Y 7.8/1.1)
	Surface treatment	Acrylic resin coating
	Material	Alloy hot-dip zinc-coated carbon steel sheet
Weight		3.5kg
Accessory name x Qty. <Material/Surface treatment>		Washer faced screw (M5x15) x 4 <Iron wire (SWCH18A)/Zinc nickel plated>

Dimensions

Unit : mm (inch)

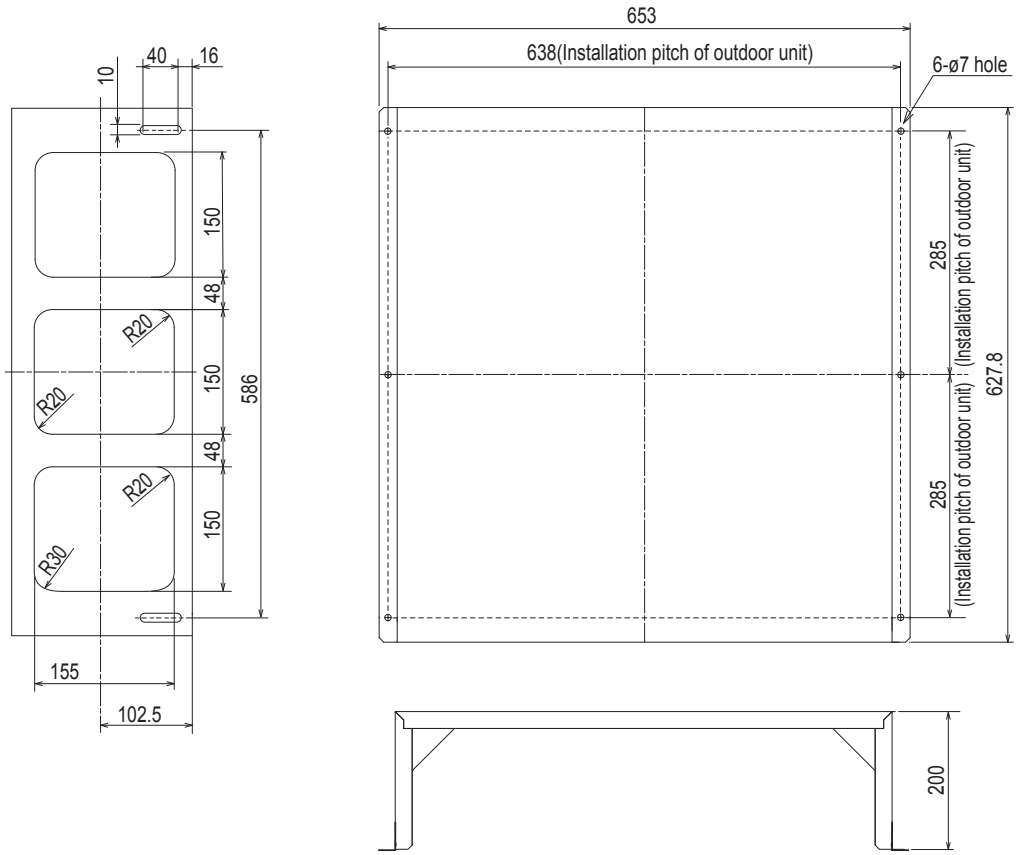

⚠ CAUTION

* Air Guide prevents reverse rotation of outdoor unit fan when it enters low speed rotation mode with fan controller being operated. It is also used for protection of fan when strong winds, such as a typhoon, wind blowing through tall buildings, etc., directly strike the air outlet. In addition, installation of this product is necessary when cooling opetation is to be performed in outdoor tempreture of -5℃ or lower (down to -15℃).

Note the followings when installing this guide:
1) Be sure not to use "upward discharge" in a place where snowing is possible. Snow may accumulate in the guard, which could damage the fan, etc.
2) Attaching this unit will decrease the performance (by 2-3%) and increase noise from outdoor unit (by approx. 1-2 dB).
3) Do not use "upward discharge" when there are any obstacles at the back and on both sides of outdoor unit (air is taken in from top of unit): This could cause a short cycle.
4) To eliminate the influence of external wind, be sure to install the unit with its back facing to wall.
5) Do not install this unit in a place where wind directly blows to the back of the unit.

How to Use / How to Install

Always observe for safety

●Carefully read this section 「Always observe for safety」, and securely install the optional parts.
●Be sure to observe the cautions described here: They include critical contents for safety.
●The following indications show the classifications for danger, and possible consequences following incorrect handling.

⚠WARNING	Incorrect handling could lead to death or serious injury.
⚠CAUTION	Incorrect handling could lead to injury or damage to house and household articles.

●After installation, perform a test run and make sure that there is no abnormality, and ask your customer to keep this installation sheet with the instruction manual at all times. Also ask the customer to transfer these manuals to a new user if the user changes.

⚠WARNING

Ask the dealer or specialist for installation.
●If installed incorrectly by user, water leak, electric shock, fire, etc. could result.

Carefully install the panel according to this installation sheet.
●Incorrect installation could cause water leak, electric shock, fire, etc.

Before performing installation (moving) and electrical work

⚠CAUTION

Do not place polyethylene bags in reach of young children.
●Putting them over the head will block breathing passages, which could result in suffocation.

If electrical work is necessary, use only specified electric wires adapted with current capacity.
●Use of unsuitable wire could cause electric leak, overheating or fire.

Securely apply heat-insulation to refrigerant pipe so that no condensation occurs.
●If heat-insulation is inadequate, condensation could occur on the surface of pipes and dewdrops could accumulate on ceiling, floor or important goods.

Securely perform drain piping work according to the installation manual so that no condensation occurs.
●If piping work is incorrect, water leak may occur and ceiling, furniture, etc may get wet.

This Air Guide prevents reverse rotation of outdoor unit fan when it enters low speed rotation mode with fan controller being operated. It is also used for protection of fan when strong winds, such as in a typhoon, wind blowing through tall buildings, etc., directly strike the at air outlet.
In addition, installation of this product is necessary when cooling operation is to be performed in outside-air temperature of −5℃ or lower (down to −15℃).
Pay attention to the following points when installing this product:
1) To eliminate the effects of external wind, be sure to install this unit with back surface facing wall side.
2) Do not install this unit in orientation or site where wind directly blows at the back of the unit.
3) Installing of this product will reduce the capacity of the unit (approx. 2 or 3%) and increase the noise of outdoor unit (approx. 1 or 2dB).
4) Do not use this product where there is any obstacle at either side or above the outdoor unit (discharged air will be blocked). This may cause a short cycle.

When 2-fan type outdoor unit is used, note that two sets of this product will be becessary.

1 Checking parts

Make sure that all the following parts, in addition to this manual, are in this box:

①Air Guide	1	②Mounting screw (5×15)	6	③Washer	6	④Spring washer	6
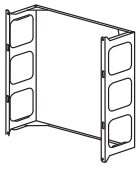		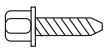					

OPTIONAL PARTS

2 Requirements of space for installation

(Unit : mm)

(1)One unit installation

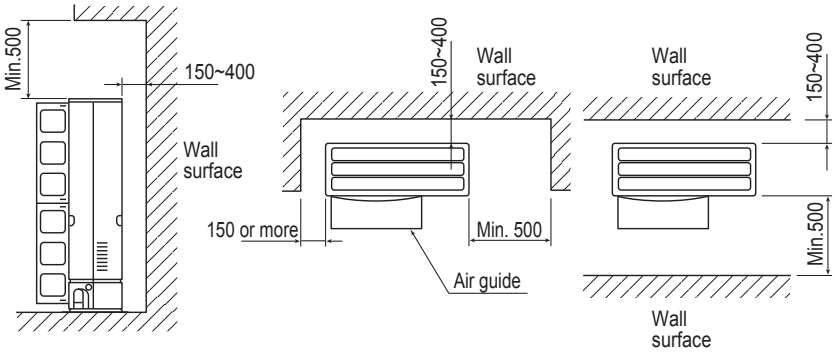

(2)Multiple unit installation : Installation of multiple units in series must be no more than 5 units.

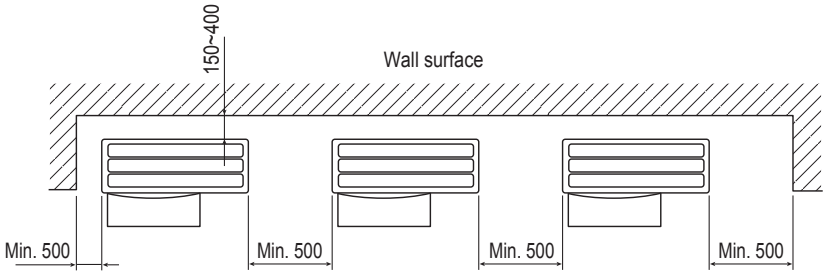

3 Installation procedure

(1)Install the air guide ① on the outdoor unit using washers ③, spring washers ④ and screws ②.

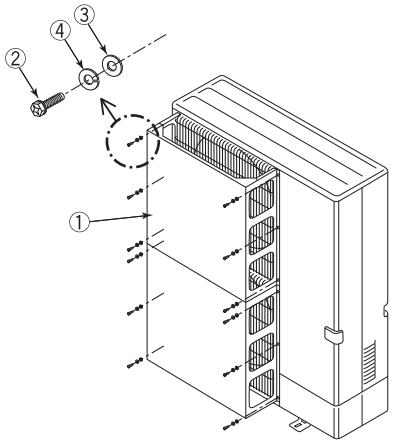

Drain Socket

PAC-SF37DS-E

Photo

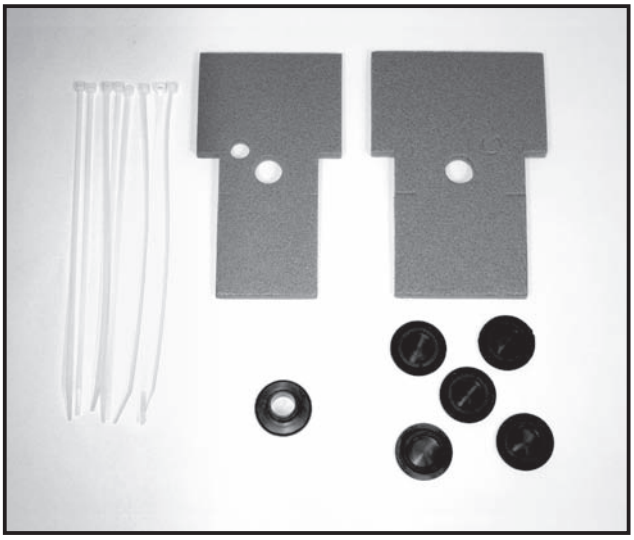

Descriptions

Cap the unnecessary holes on the outdoor unit (bottom) and centralize the drainage when using a drain pipe.

Applicable Models

■ PU(H)-P71-140V(Y)HA

Specifications

Drain pipe	PVC VP-25 or vinyl hose (ID: 25mm)
Operating conditions	No freezing allowed (Never to be used in cold climates)
Material	EPT rubber
Component	Drain socket x 1, Drain cap x 5 Heat insulator x 3 (1 for liquid pipe, 1 large and 1 small insulator for gas pipe), Band x 8

Dimensions

Unit : mm

Drain socket

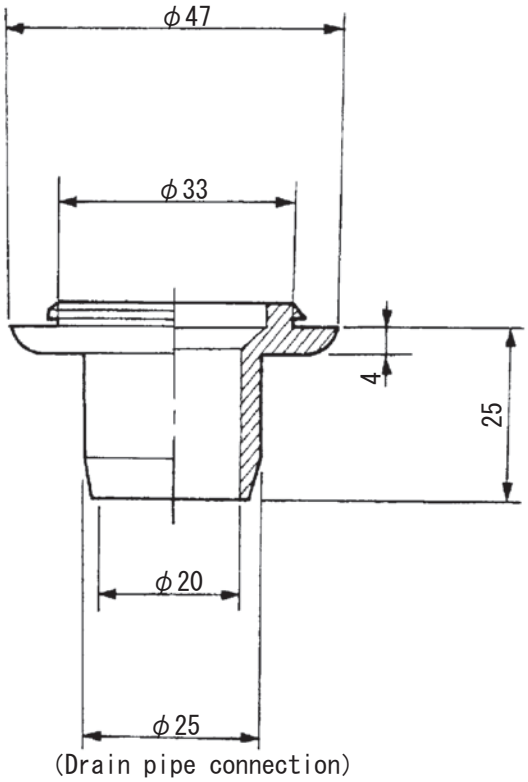

Drain cap

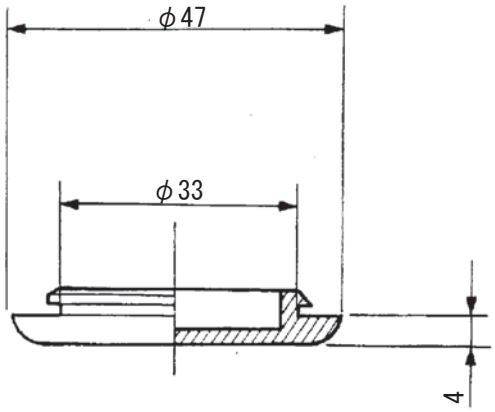

OPTIONAL PARTS

How to Use / How to Install

1 Accessory

Be aware that the following parts are put in the package together with the instruction manual.

①Drain socket ····· 1 pcs	②Drain cap ····· 5 pcs	③Insulation part (for liquid pipe) ···· 1 pc
		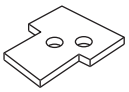 with 2 holes (common part to all the models)

④Insulation part (for gas pipe) ····· 1 pc	⑤Band ····· 8 pcs
Common part to all the models. 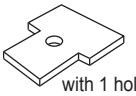 with 1 hole	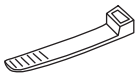

2. Installation method for drain unit

☆Prepare the adhesive in the field.

(1) Glue the drain socket ① to the hole that is used to centralize the drainage among several holes at the bottom of the unit with the glue (Prepared in the field)

(2) Glue the drain caps ② to close all the other unnecessary holes with the glue (Prepared in the field)

〈Note〉 Apply the glue securely, as the glue will work as seal to prevent water from leaking.

〈Note〉 Use the adhesive for the rubber and metal.

〈Recommended product〉

Supper X sirees made by CEMEDINE Co., Ltd.

(3) Insert a vinyl tube of which inner diameter 25 mm available commercially or a hard vinyl tube VP25 to the drain socket ①.

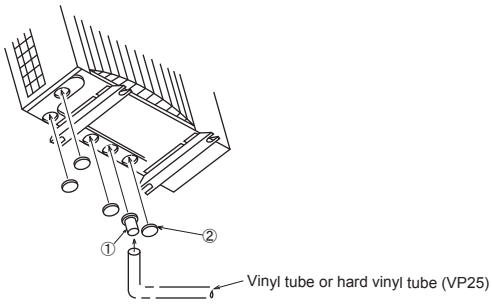

3. Installation method for insulation parts

Install the insulation parts to stop valve of the outdoor unit.

※The insulation parts should be installed after the tube has been connected to the unit.

※Some units are provided with a check valve near stop valve. In this case, cut the insulation parts ③ and ④ so that they will fit the stop valve properly.

(1) Install the insulation part ③ with 2 holes to the liquid pipe side so that the holes fit the valve caps and cover the stop valve entirely.

(2) Fix the insulation part ③ securely with bands ⑤.

Install the other insulation part ④ to the gas pipe side with the same procedure.

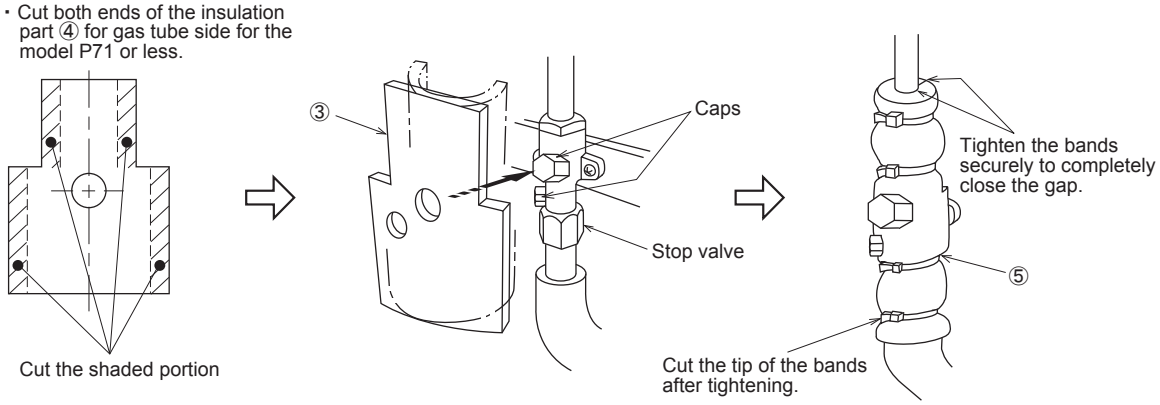

Drain Socket

PAC-SG61DS-E

Photo

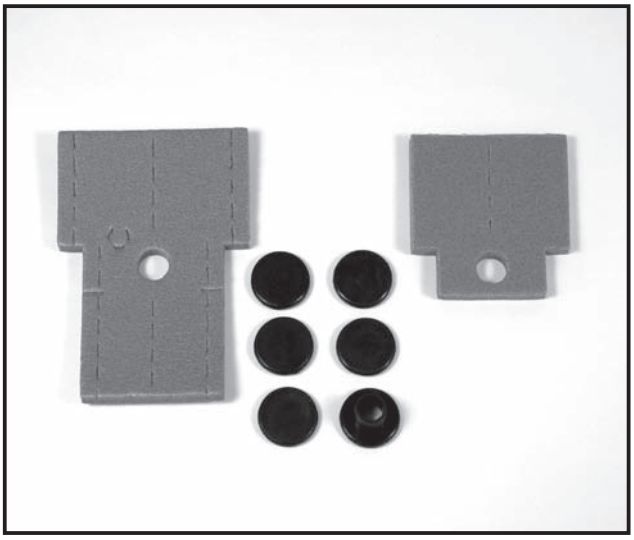

Descriptions

Cap the unnecessary holes on the outdoor unit (bottom) and centralize the drainage when using a drain pipe.

Applicable Models

- MXZ-8A140VA
- PUHZ-RP35VHA4
- PUHZ-RP50VHA4
- PUHZ-RP60VHA4
- PUHZ-RP71VHA4
- PUHZ-RP100VKA/YKA
- PUHZ-RP125VKA/YKA
- PUHZ-RP140VKA/YKA
- PUHZ-HRP71/100/125VHA2
- PUHZ-P100/125/140/200/250

Specifications

Drain pipe	PVC VP-25 or vinyl hose (ID: 25mm)
Operating conditions	No freezing allowed (Never to be used in cold climates)
Material	EPT rubber
Component	Drain socket x 1, Drain cap x 5 Heat insulator x 3 (1 for liquid pipe, 1 large and 1 small insulator for gas pipe), Band x 8

Dimensions

Unit : mm

Drain socket

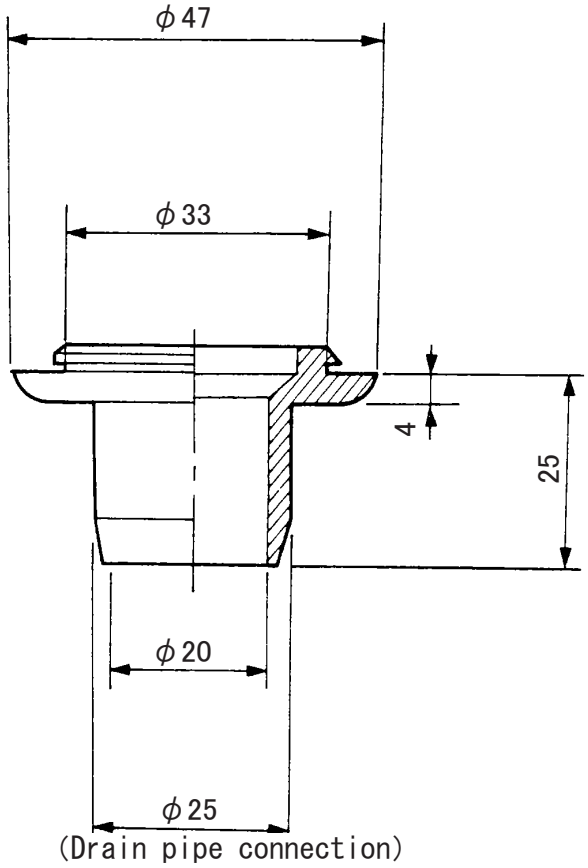

Drain cap

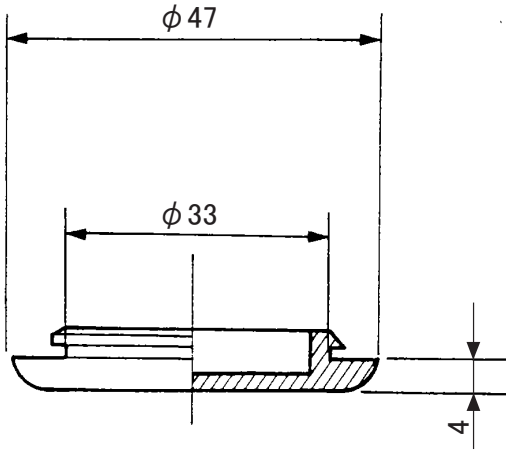

OPTIONAL PARTS

How to Use / How to Install

1 Accessory

Make sure that the following parts are put in the package.

①Drain socket ····· 1 pcs	②Drain cap ····· 5 pcs	
		
③Insulation part (for liquid pipe) ···· 1 pc	④Insulation part (for gas pipe) ····· 1 pc	⑤Band ····· 8 pcs
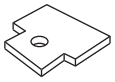 Small size	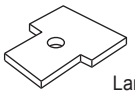 Large size	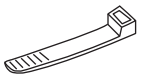

2. Installation method for drain unit ☆Prepare the adhesive in the field.

(1) Glue the drain socket ① to the hole that is used to centralize the drainage among several holes at the bottom of the unit with the glue (Prepare in the field).

(2) Glue the drain caps ② to close all the other unnecessary holes with the glue (Prepare in the field).

〈Note〉 Apply the glue securely, as the glue (Prepare in the field) will work as seal to prevent water from leaking.

〈Note〉 Use the adhesive for the rubber and metal.

〈Recommended product〉 Supper X series made by CEMEDINE CO., Ltd.

(3) Insert a vinyl tube of which inner diameter 25 mm available commercially or a hard vinyl tube VP25 to the drain socket ①.

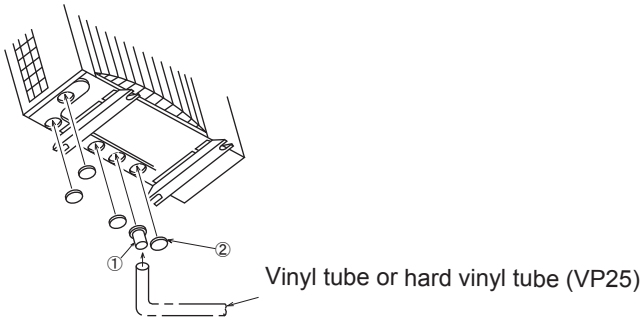

3. Installation method for insulation parts

Install the insulation parts to stop valve of the outdoor unit.

※The insulation parts should be installed after the tube has been connected to the unit.

※Some units are provided with a check valve near stop valve. In this case, cut the insulation parts ③ and ④ so that they will fit the stop valve properly.

(1) Install the insulation part ③ with 2 holes to the liquid pipe side so that the holes fit the valve caps and cover the stop valve entirely.

(2) Fix the insulation part ③ securely with bands ⑤.

Install the other insulation part ④ to the gas pipe side with the same procedure.

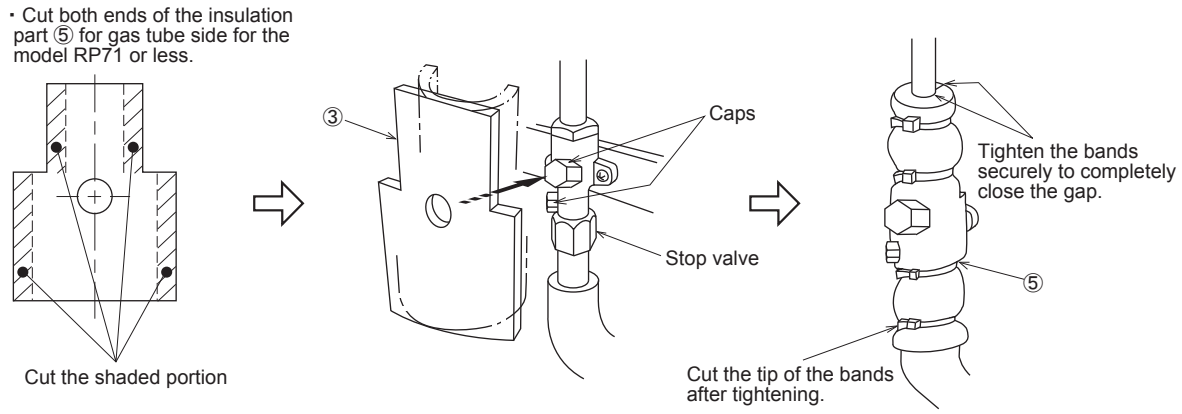

OPTIONAL PARTS

Centralized Drain Pan

PAC-SG63DP-E

Photo

Descriptions

A drain pan for the drain water generated from the outdoor unit.

Applicable Models

- PUHZ-RP35
- PUHZ-RP50

Specifications

Drain outlet size		R3/4 screw (20A)
Exterior	Color (Munsell)	Ivory (3.0Y 7.8/1.1)
	Surface treatment	Acrylic resin coating
	Material	Alloy hot-dip zinc-coated carbon steel sheet (t1.6)
Weight		6.3kg
Mounting bolt (locally prepared)		M10 (or W3/8), length: 48mm or less extrusion from drain pan's undersurface

Dimensions

Unit : mm

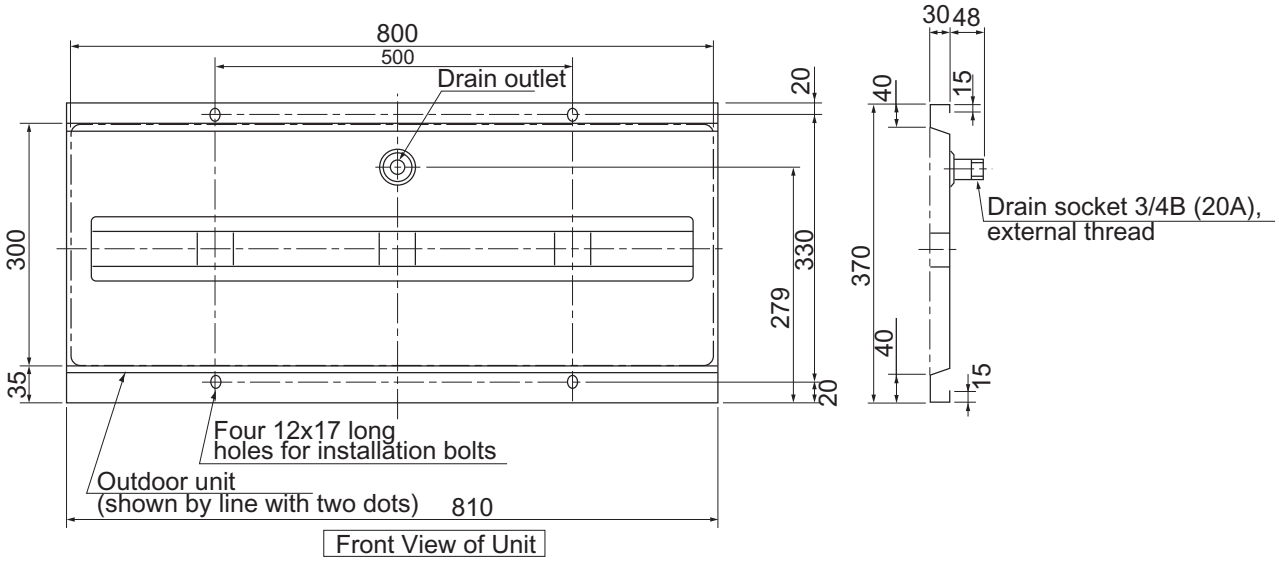

OPTIONAL PARTS

How to Use / How to Install

1 Installation Method

(1) When installing on installation frame

1) The installation frame must have structure and strength that can sufficiently support the outdoor unit and drain pan. Securely install the outdoor unit and drain pan so that they cannot fall or drop as a result of earthquake, strong wind, etc.
2) The drain socket of drain pan is at the center in the longitudinal direction. When constructing the installation frame, be careful that no part of the frame interferes with the socket.
3) The drain pan is tightened with the outdoor unit. Punch approx. ϕ13 holes in the installation frame at pitches to install the outdoor unit.
4) Fix the frame, drain pan and outdoor unit together to join them firmly (at the 4 points). The bolt length must be no more than 60 mm.

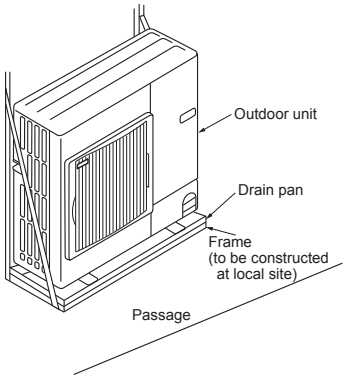

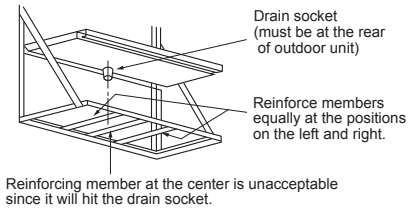

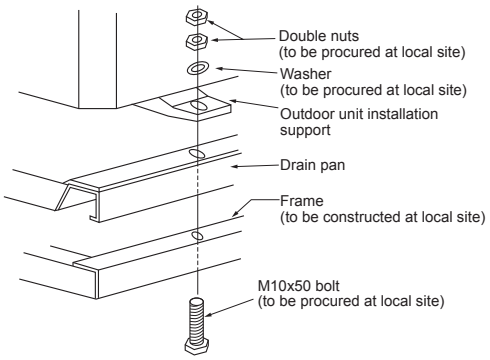

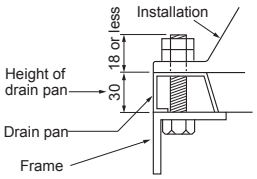

(2) When installing on foundation

- Since concentrated drain disposal is necessary, make the foundation at least 150 mm high measured from the ground as shown in the figure below.
  If it is less than 150 mm, drain piping will not be possible because the drain socket protrudes 48 mm.

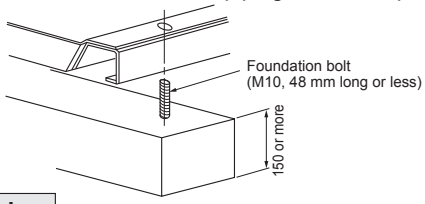

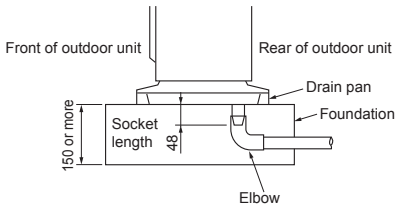

2 Drain Piping

(1) When connecting steel pipe:
Connect 3/4B internally threaded pipe.
(2) When connecting vinyl pipe (soft):
Use a ϕ25 mm internal dia. pipe, and fix the connected section with a hose band, etc.
(3) When connecting PVC pipe (hard):
Use VP-20 and connect with a joint for PVC pipe.
※In all cases, seal the socket threaded section securely with a seal tape, etc., and make sure that water does not leak.

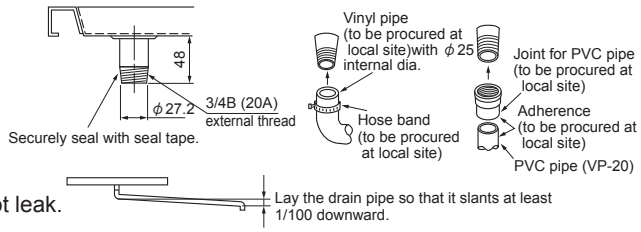

3 Refrigerant Piping

※For PAC-SG64DP-E only

- The refrigerant pipe can be laid in from four directions: front, right, rear and bottom. When laying, be sure to perform the following:

(1) Piping from the bottom:
Cut out the rubber bush to match the thickness of refrigerant pipe insulator. Pass the refrigerant pie through the rubber bush and fit it into the burring hole. Seal it with adhesive that is equivalent to Cemedyne 366 (to be procured at local site) to prevent water leak.

(2)Piping from other directions:
Block the burring hole of the bottom piping section in the drain pan with rubber bush. Seal it with adhesive that is equivalent to Cemedyne 366 (to be procured at local site) to prevent water leak.

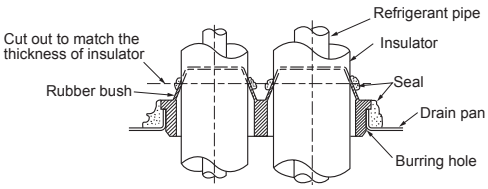

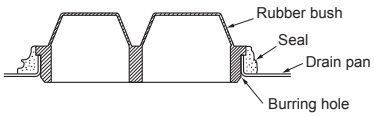

Centralized Drain Pan

PAC-SG64DP-E

Photo

Descriptions

A drain pan for the drain water generated from the outdoor unit.

Applicable Models

- MXZ-8A140VA
- PUHZ-HRP71/100/125
- PUHZ-RP60
- PUHZ-RP71
- PUHZ-P100-250

Specifications

Drain outlet size		R3/4 screw (20A)
Exterior	Color (Munsell)	Ivory (3.0Y 7.8/1.1)
	Surface treatment	Acrylic resin coating
	Material	Alloy hot-dip zinc-coated carbon steel sheet (t1.6)
Weight		7.8kg
Mounting bolt (locally prepared)		M10 (or W3/8), length: 60mm or less extrusion from drain pan's undersurface

Dimensions

Unit : mm

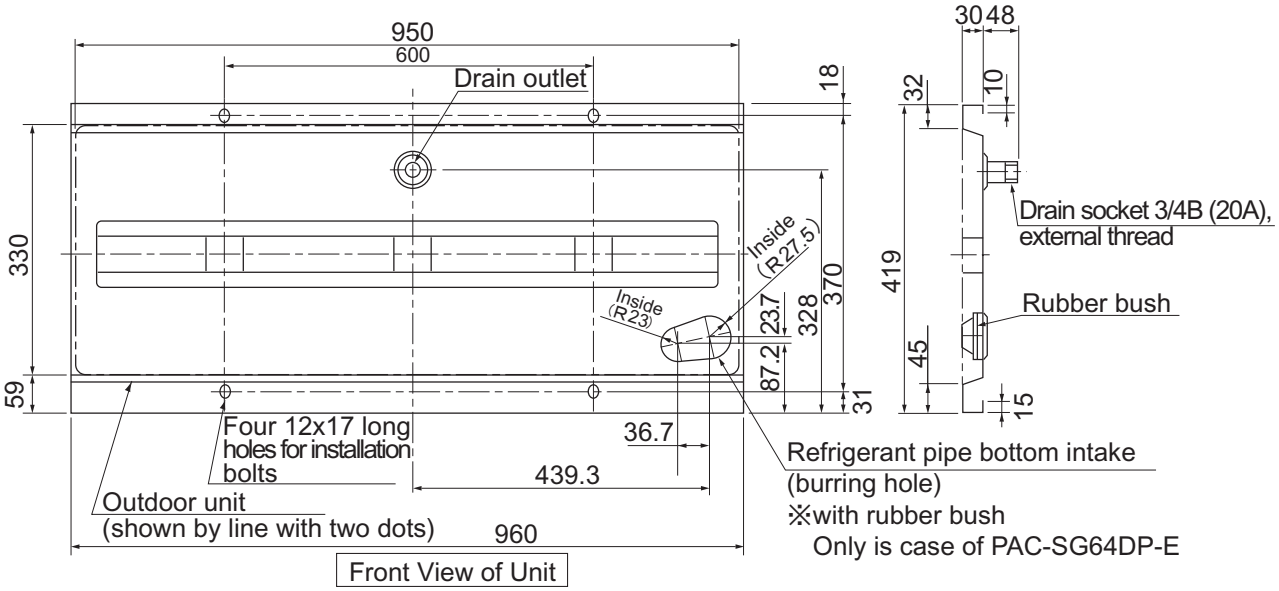

OPTIONAL PARTS

How to Use / How to Install

1 Installation Method

(1) When installing on installation frame

1) The installation frame must have structure and strength that can sufficiently support the outdoor unit and drain pan. Securely install the outdoor unit and drain pan so that they cannot fall or drop as a result of earthquake, strong wind, etc.
2) The drain socket of drain pan is at the center in the longitudinal direction. When constructing the installation frame, be careful that no part of the frame interferes with the socket.
3) The drain pan is tightened with the outdoor unit. Punch approx. ϕ13 holes in the installation frame at pitches to install the outdoor unit.
4) Fix the frame, drain pan and outdoor unit together to join them firmly (at the 4 points). The bolt length must be no more than 60 mm.

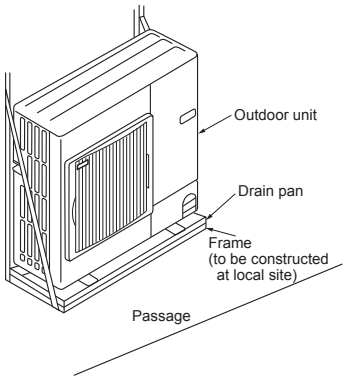

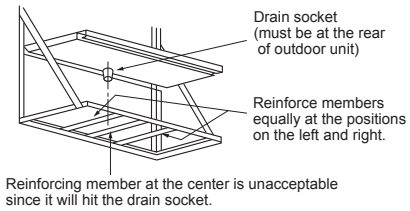

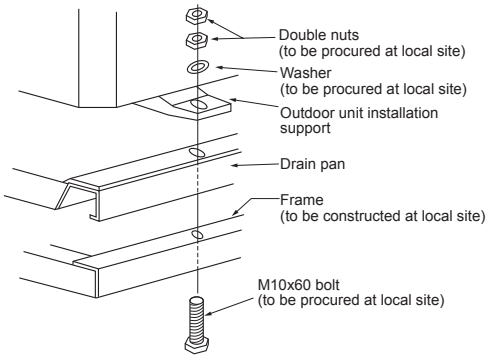

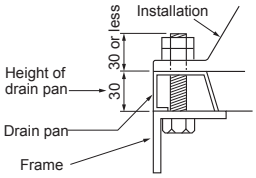

(2) When installing on foundation

- Since concentrated drain disposal is necessary, make the foundation at least 150 mm high measured from the ground as shown in the figure below.
  If it is less than 150 mm, drain piping will not be possible because the drain socket protrudes 48 mm.

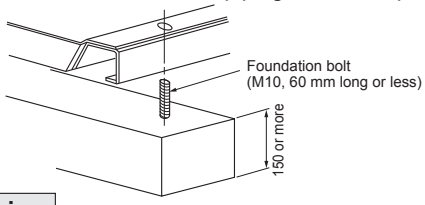

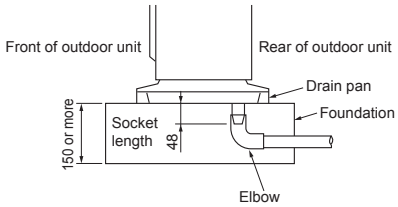

2 Drain Piping

(1) When connecting steel pipe:
Connect 3/4B internally threaded pipe.
(2) When connecting vinyl pipe (soft):
Use a ϕ25 mm internal dia. pipe, and fix the connected section with a hose band, etc.
(3) When connecting PVC pipe (hard):
Use VP-20 and connect with a joint for PVC pipe.
※In all cases, seal the socket threaded section securely with a seal tape, etc., and make sure that water does not leak.

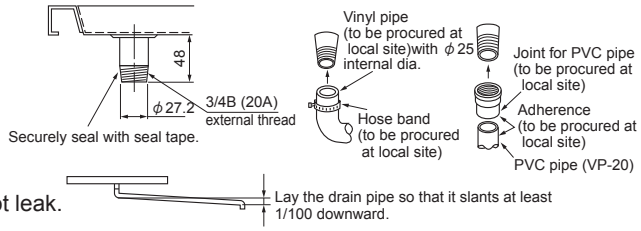

3 Refrigerant Piping

※For PAC-SG64DP-E only

- The refrigerant pipe can be laid in from four directions: front, right, rear and bottom. When laying, be sure to perform the following:

(1) Piping from the bottom:
Cut out the rubber bush to match the thickness of refrigerant pipe insulator. Pass the refrigerant pie through the rubber bush and fit it into the burring hole. Seal it with adhesive that is equivalent to Cemedyne 366 (to be procured at local site) to prevent water leak.

(2)Piping from other directions:
Block the burring hole of the bottom piping section in the drain pan with rubber bush. Seal it with adhesive that is equivalent to Cemedyne 366 (to be procured at local site) to prevent water leak.

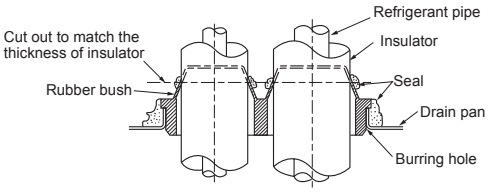

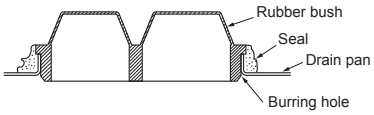

Centralized Drain Pan

PAC-SH97DP-E

Photo

Descriptions

A drain pan for the drain water generated from the outdoor unit.

Applicable Models

■ PUHZ-RP KA

Specifications

Drain outlet size		R3/4 screw (20A)
Exterior	Color (Munsell)	Ivory (3.0Y 7.8/1.1)
	Surface treatment	Acrylic resin coating
	Material	Alloy hot-dip zinc-coated carbon steel sheet (t1.6)
Weight		8.8kg
Mounting bolt (locally prepared)		M10 (or W3/8), length: 60mm or less extrusion from drain pan's undersurface

Dimensions

Unit : mm

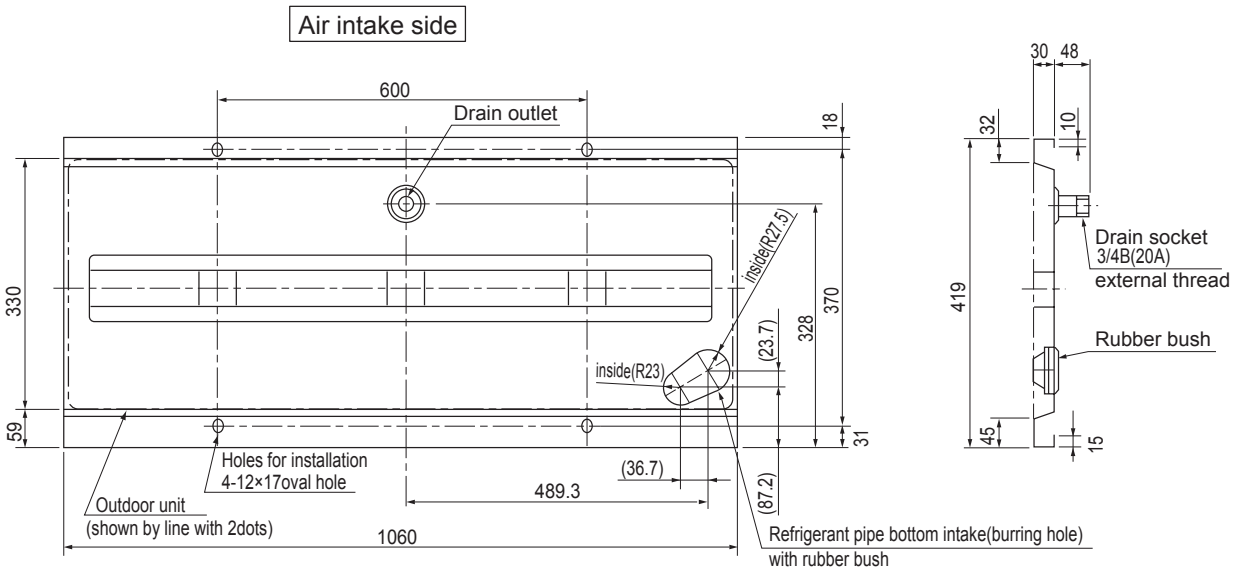

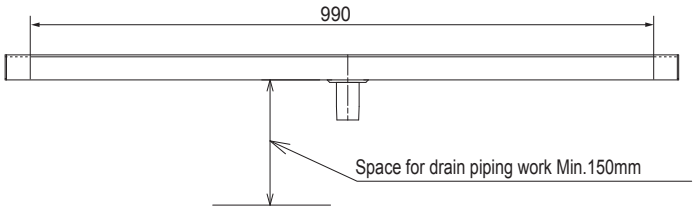

OPTIONAL PARTS

How to Use / How to Install

1 Installation Method

(1) When installing on installation frame

1) The installation frame must have structure and strength that can sufficiently support the outdoor unit and drain pan. Securely install the outdoor unit and drain pan so that they cannot fall or drop as a result of earthquake, strong wind, etc.
2) The drain socket of drain pan is at the center in the longitudinal direction. When constructing the installation frame, be careful that no part of the frame interferes with the socket.
3) The drain pan is tightened with the outdoor unit. Punch approx. ϕ13 holes in the installation frame at pitches to install the outdoor unit.
4) Fix the frame, drain pan and outdoor unit together to join them firmly (at the 4 points). The bolt length must be no more than 60 mm.

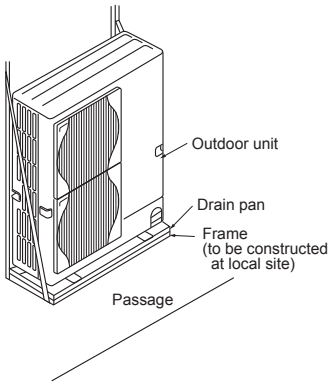

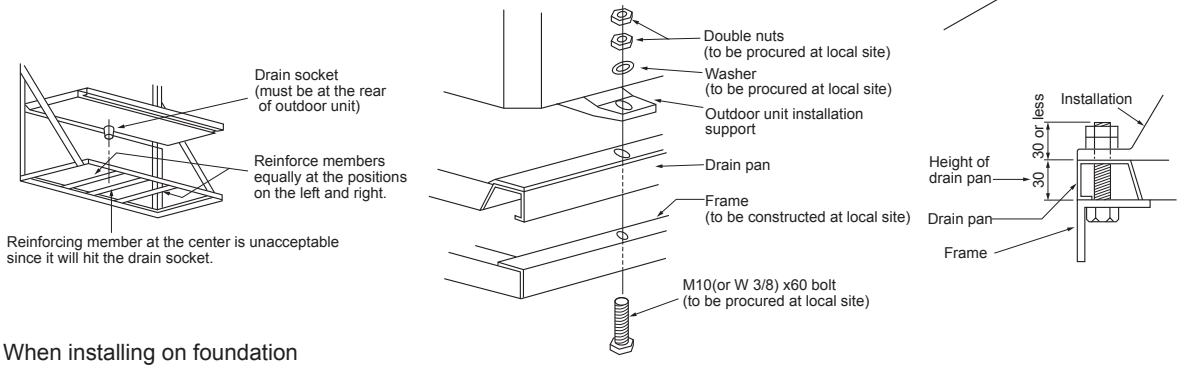

(2) When installing on foundation

- Since concentrated drain disposal is necessary, make the foundation at least 150 mm high measured from the ground as shown in the figure below.
  If it is less than 150 mm, drain piping will not be possible because the drain socket protrudes 48 mm.

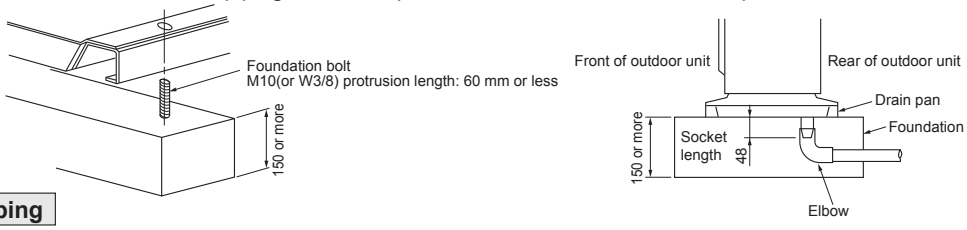

2 Drain Piping

(1) When connecting steel pipe:
Connect 3/4B internally threaded pipe.
(2) When connecting vinyl pipe (soft):
Use a ϕ25 mm internal dia. pipe, and fix the connected section with a hose band, etc.
(3) When connecting PVC pipe (hard):
Use VP-20 and connect with a joint for PVC pipe.
※In all cases, seal the socket threaded section securely with a seal tape, etc., and make sure that water does not leak.

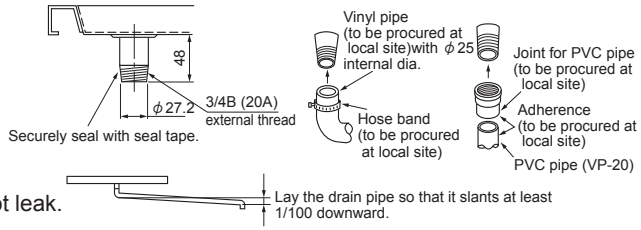

3 Refrigerant Piping

- The refrigerant pipe can be laid in from four directions: front, right, rear and bottom. When laying, be sure to perform the following:

(1) Piping from the bottom:
Cut out the rubber bush to match the thickness of refrigerant pipe insulator. Pass the refrigerant pie through the rubber bush and fit it into the burring hole. Seal it with adhesive that is equivalent to Cemedyne 366 (to be procured at local site) to prevent water leak.

(2)Piping from other directions:
Block the burring hole of the bottom piping section in the drain pan with rubber bush. Seal it with adhesive that is equivalent to Cemedyne 366 (to be procured at local site) to prevent water leak.

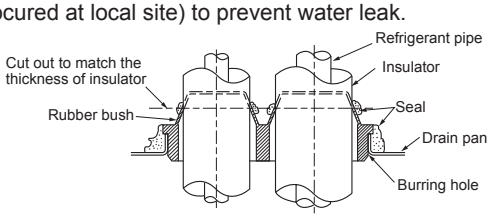

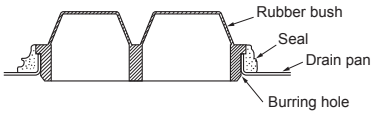

M-NET Converter

PAC-SF81MA-E

Model change from PAC-SF80MA-E

Photo

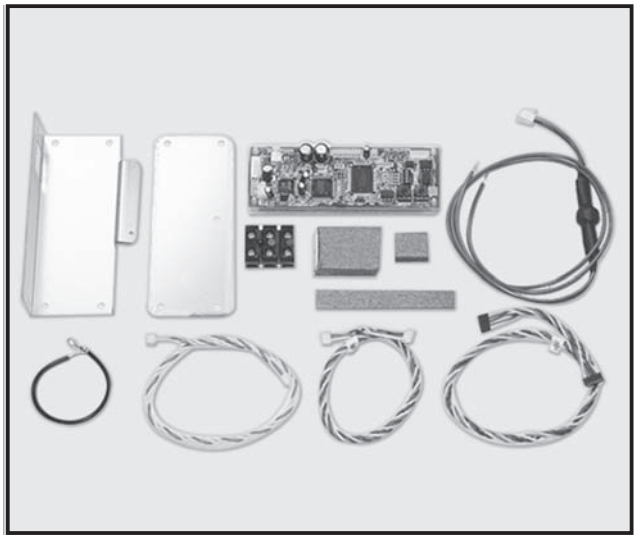

Descriptions

A-control Mr. SLIM models can be connected to "M-NET" through optional M-NET converter so that they can be monitored / controlled effictively and meticulously.

Applicable Models

- All PU(H)-P
- All PUHZ-RP
- All PUHZ-P outdoor Units (A-control)
- All PUHZ-HRP

Specifications

Power	Supplied from control board
Power consumption	0.6W (at 5V DC, 12V DC)
Operating conditions	Mounted inside the electrical utility box of outdoor unit. (Tempreture : -20 to 60℃ , humidity : 90% or less (no condensation))
Weight	0.3kg

Dimensions

Unit : mm

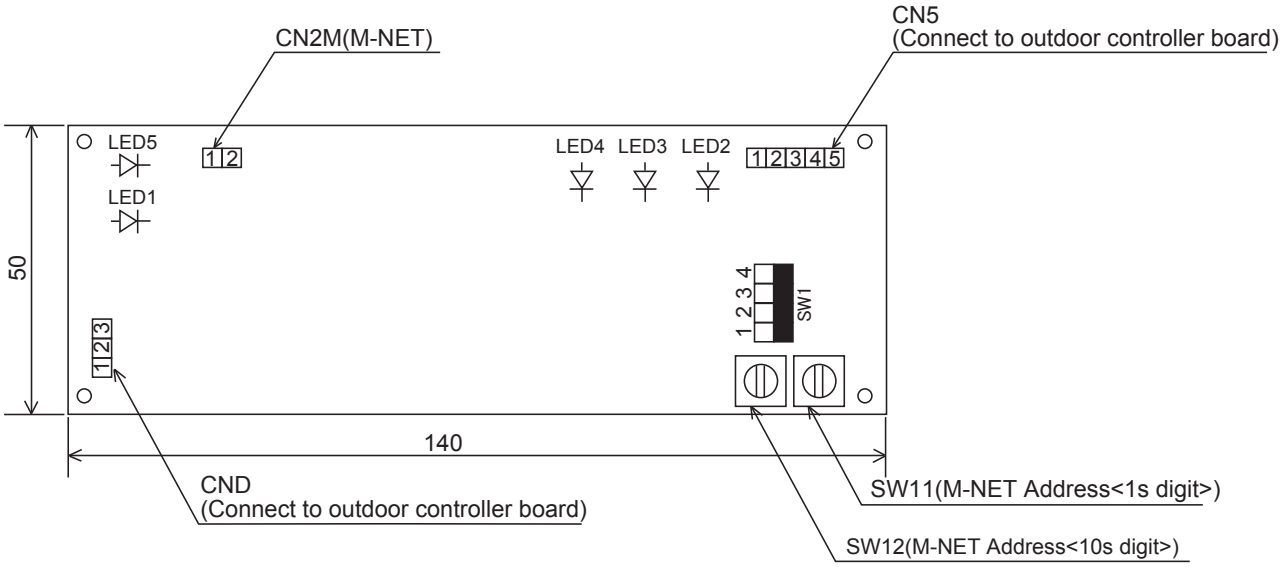

OPTIONAL PARTS

INSTALLATION MANUAL FOR A-M CONVERTER

This manual is written only for the models

A:	PUHZ-RP1.6/2VHA PUHZ-RP35/50VHA type PUZ-A18NHA, PUY-A12/18NHA	E:	PUHZ-RP4～6YHA PUHZ-(H)RP100～140YHA type PUHZ-RP100～140YKA
B:	PUHZ-RP2.5～6VHA（-A） PUHZ-(H)(R)P60～140VHA type PUZ-A24～42NHA, PUY-A24～42NHA PUHZ-RP100～140VKA	F:	PUHZ-RP8/10YHA（-A）, RP200/250YHA（-A） PUHZ-RP200/250YHA1（-A）
C:	PU（H）-P1～4VGA（A）, P25～100VGAA PU（H）-P1.6～6YGA（A）, P35～140YGAA	G:	PU（H）-P71/100VHA, PU（H）-P71～140YHA
D:	PUH-P8/10YE, P8/10MYA, P200/250MYA	H:	PUHZ-P200/250YHA(3), PUHZ-RP200/250YHA2, PUHZ-RP200/250YKA

SAFETY PRECAUTIONS

- Before starting installation, read the "Safety Precautions" described below.
- The following precautions must be observed as it describes the serious matters for safety.
- The safety precautions are described with the degree of danger.

⚠WARNING	When you handle wrong, it can lead to death or serious injury.
⚠CAUTION	When you handle wrong, it can lead to injury or damage to building and furniture.

- After installation, make test operation and confirm that it works properly, and explain the safety precautions, operation method, and maintenance to your customers.
  Tell your customers to keep this installation manual together with operation manual with them, and when they give or sell this machine to other person put this installation manual and operation manual with it.

⚠WARNING

The installation must be done by dealer or qualified person.
- If the customers do the installtion by themselves and it is not perfectly installed it can cause water leak, electric shock, or fire.

The installation must be done in accordance with this manual.
- If the installation is not perfectly done, it can cause water leak, electric shock, or fire.

Never try any modification.
- For repair, ask your dealer.
  If the machine is modified or repaired unperfectly, it can cause water leak, electric shock, or fire.

Never move or reinstall the machine by the customers.
- If the installation is not perfectly done, it can cause water leak, electric shock, or fire. Ask your dealer or qualified person.

The wiring must be securely done by using proper cable. The wires should be connected to the terminals not to have external force of the cable.
- Unperfect connections can cause heat or fire.

The termial cover (panel) of the unit must be installed securely.
- Unperfect installation can cause fire or electric shock by dust or water.

The electric installation must be done by qualified person in accordance with this installation manual. Use the separate circuit only for this machine and use rated voltage and circuit breaker.
- If the electric circuit power is not sufficient or the wiring is not properly done, it can cause electric shock or fire.

Before electric wiring

⚠CAUTION

Install a circuit breaker depending upon the location.
- Without a circuit breaker, it can cause electric shock.

Use standard wires which meet current capacity.
- Otherwise, it can cause short-circuit, heat, or fire.

Wires must not have tension.
- It can cause snipping, heat, or fire.

Put ground wire.
- Never ground to gas pipe, water pipe, lightning conductor, or telephone ground wire.
  Unperfrect ground can cause short-circuit.

Use proper fuses
- If you use larger size fuses or neelde wire, it can cause failure or fire.

Before test operation

⚠CAUTION

Turn the power on 12 hours or more before operation.
- If you start operation as soon as the power on, it can cause failure. Never turn the power off during season.

Never operate the machine without panel or guard off.
- It can cause serious injury being caught by rotating part or burn or electric shock by high voltage part.

Never operate the machine without air filter off.
- It can cause failure by dust.

Never operate the switches with your hand wet.
- It can cause electric shock.

Never touch refrigerant pipes while the machine running.
- The refrigerant pipes becomes high and low temperature while the machine running. If you touch the pipes by hand, it can cause chilblain or burn.

Never turn the power off as soon as the machine stops.
- Wait for 5 minutes or more. It can cause water leak or failure.

1. Parts List

No.	Description	Figure	Q'ty	Applicable models A	B	C	D	E	F	G	H	Note
①	M-NET board (with insulation sheets and supports)	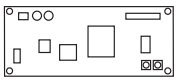	1	○	○	○	○	○	○	○	○	
②	Plate (For mounting circuit board)	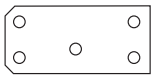	1	○								
③	Insulation sheets S, M, L	S 	S 1	○								
		M 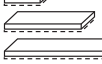	M 1	○								
		L	L 1	○	○							
④	Terminal base	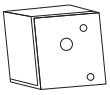	1			○	○					
⑤	Screw (M4×8)		2	○ (1)		○ (1)	○ (1)	○ (2)				
⑥	Terminal block (M-NET)	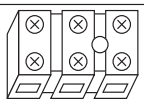	1	○	○	○	○	○	○	○	○	
⑦	Terminal screw (M3x20)		1	○	○	○	○	○	○	○	○	
⑧	Label	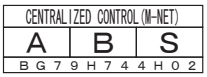	1	○	○	○	○	○	○	○	○	
⑨	Lead wire-A (5 wires)	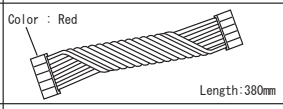	1	○	○			○	○		○	Wire Marking : INV type Always make sure that the markings and the applicable model match. If used incorrectly, parts could be damaged.
⑩	Lead wire-B (5 wires)	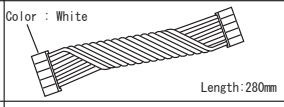	1			○	○			○		Wire Marking : NON-INV Always make sure that the markings and the applicable model match. If used incorrectly, parts could be damaged.
⑪	Lead wire-C (3 wires)	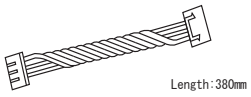	1	○	○	○	○	○	○	○	○	
⑫	Lead wire-D (2 wires)	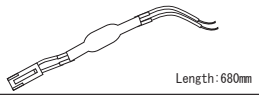	1	○	○	○	○	○	○	○	○	
⑬	Ground wire and screw (M4×8)		1each	(○)	(○)	(○)	(○)	(○)	(○)	(○)	(○)	
⑭	Pull tight	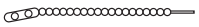	2	○	○	○	○	○	○	○	○	
⑮	Plate 2 (For mounting circuit board)	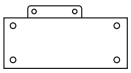	1					○				

OPTIONAL PARTS

2. Installation procedure 【Applicable model : Group A】

●To protect the wires connected to M-NET board from the edges of sheet-metal component, paste the insulation on the edge surface of panel sheet-metal before proceeding with the following work.

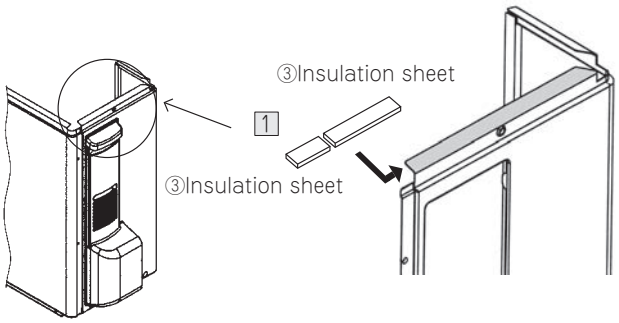

(Top view of Electric box)

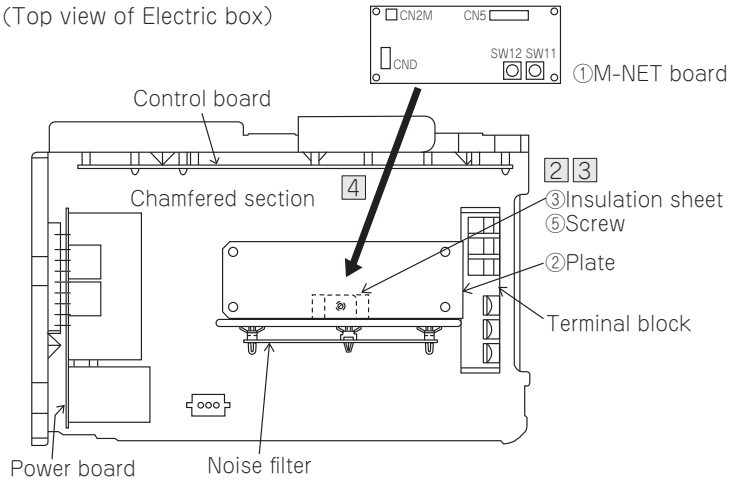

(When viewed from the side of Electric box)

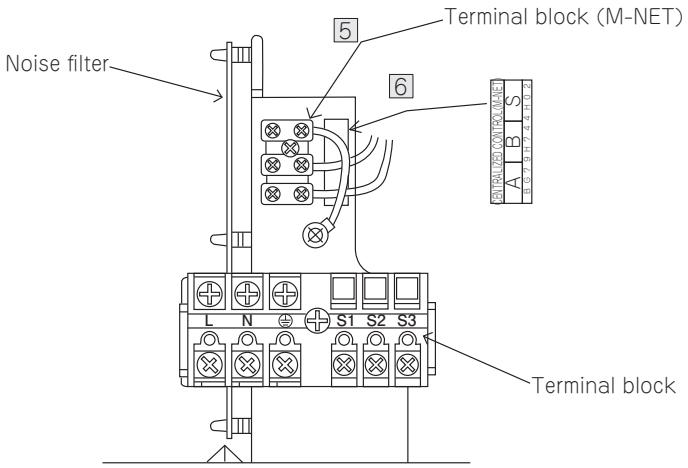

1 Affix insulation sheets and ③ to the backside of the flange surface on the top of the side panel.

2 Starting from the bottom, mount Insulation Sheet ③ to the "L" bend section on the back of the noise filter mounting panel.

3 Position the chamfered section of Plate ② so that it faces the fan side (the left side of the drawing) and mount it using Screw ⑤.

4 As shown in the illustration, position M-NET board ① (insulation sheet, with support) on the four corners of Plate ② so that the DIP switches (SW11, SW12) are on the terminal block side and then mount.
※Push it firmly until you hear it "click"

5 Use terminal screw ⑦ to secure terminal block ⑥
※Terminal block ⑥ has a round boss for positioning:Fit the round boss into the positioning hole in steel-plate.

6 Paste label ⑧

7 Use lead wire-A⑨ to connect CN5 of M-NET board ① connection and CNMNT of outdoor control board.
※Caution
Wire Marking:INV type, Connector color:Red Always make sure that the markings and the applicable model match. If used incorrectly, parts could be damaged.

8 Use lead wire-C ⑪ to connect CND of M-NET board ① connection and CNVMNT of outdoor control board.

9 Use lead wire-D ⑫ to connect CN2M of M-NET board ① connection and terminals A and B of terminal block ⑥ Polarity is not a concern.
※Connect the wire firmly making sure that the screws on terminal block are not loose.

10 The lead wires should be tied together with the other lead wires with the pull tight ⑭ not to loose.
Wiring length is adjusted according to apparatus.

It progresses to the xx page "3.Wiring method for M-NET"

Note1:Use ground wire and screw ⑬ as required to connect the shield of M-NET transmission line to the unit.
Note2:Take great care that no lead wire is caught on anything when instaling panels.

2. Installation procedure 【Applicable model : Group B】

●To protect the wires connected to M-NET board from the edges of sheet-metal component, paste the insulation on the edge surface of panel sheet-metal before proceeding with the following work.

1 Paste insulation sheet ③ on sheet-metal so that it completely envelops the edge surface of sheet-metal.

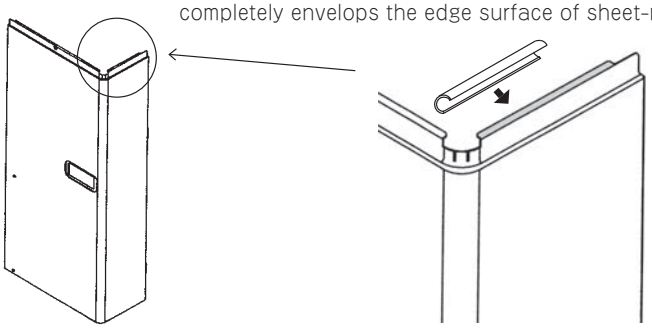

(When viewed from the side of Electric box)

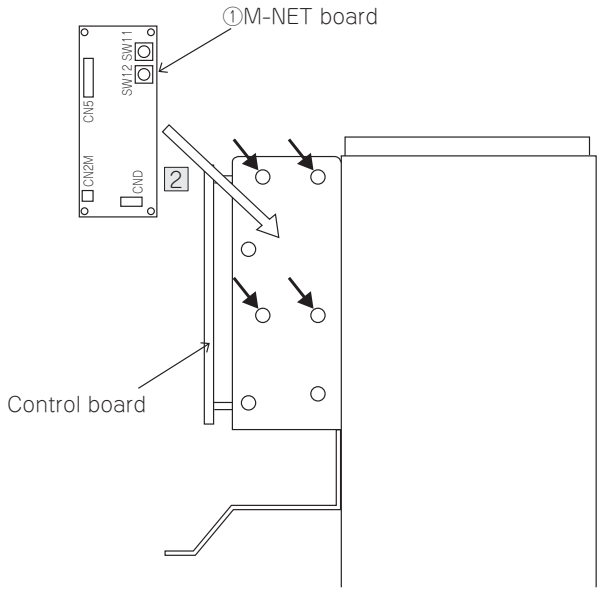

(When viewed from the side of Electric parts box)

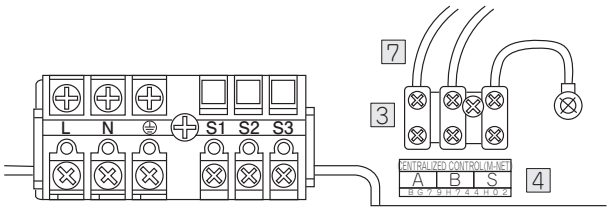

1 Pate insulation sheet ③ on sheet-metal so that it completely envelops the edge surface of sheet-metal.

2 Install M-NET board ① (with insulation sheets and supports) on the side of Electric box so that the rotary switch faces up (at the four points indicated by arrows).
※Push it firmly until you hear it "click".

3 Use terminal screw ⑦ to secure terminal block⑥
※Terminal block⑥ has a round boss for positioning:Fit the round boss into the positioning hole in steel-plate.

4 Paste label ⑧ under terminal block ⑥

5 Use lead wire-A ⑨ to connect CN5 of M-NET board ① connection and CNMNT of outdoor control board.
※Caution
Wire Marking:INV type, Connector color:Red Always make sure that the markings and the applicable model match. If used incorrectly, parts could be damaged.

6 Use lead wire-C ⑪ to connect CND of M-NET board ① connection and CNVMNT of outdoor control board.

7 Use lead wire-D ⑫ to connect CN2M of M-NET board ① connection and terminals A and B of terminal block ⑥ Polarity is not a concern.
※Connect the wire firmly making sure that the screws on terminal block are not loose.

8 The lead wires should be tied together with the other lead wires with the pull tight ⑭ not to loose.
Wiring length is adjusted according to apparatus.

It progresses to the page "3.Wiring method for M-NET"

Note1:Use ground wire and screw ⑬ as required to connect the shield of M-NET transmission line to the unit.
Note2:Take great care that no lead wire is caught on anything when instaling panels.

2. Installation procedure【Applicable model : Group C】

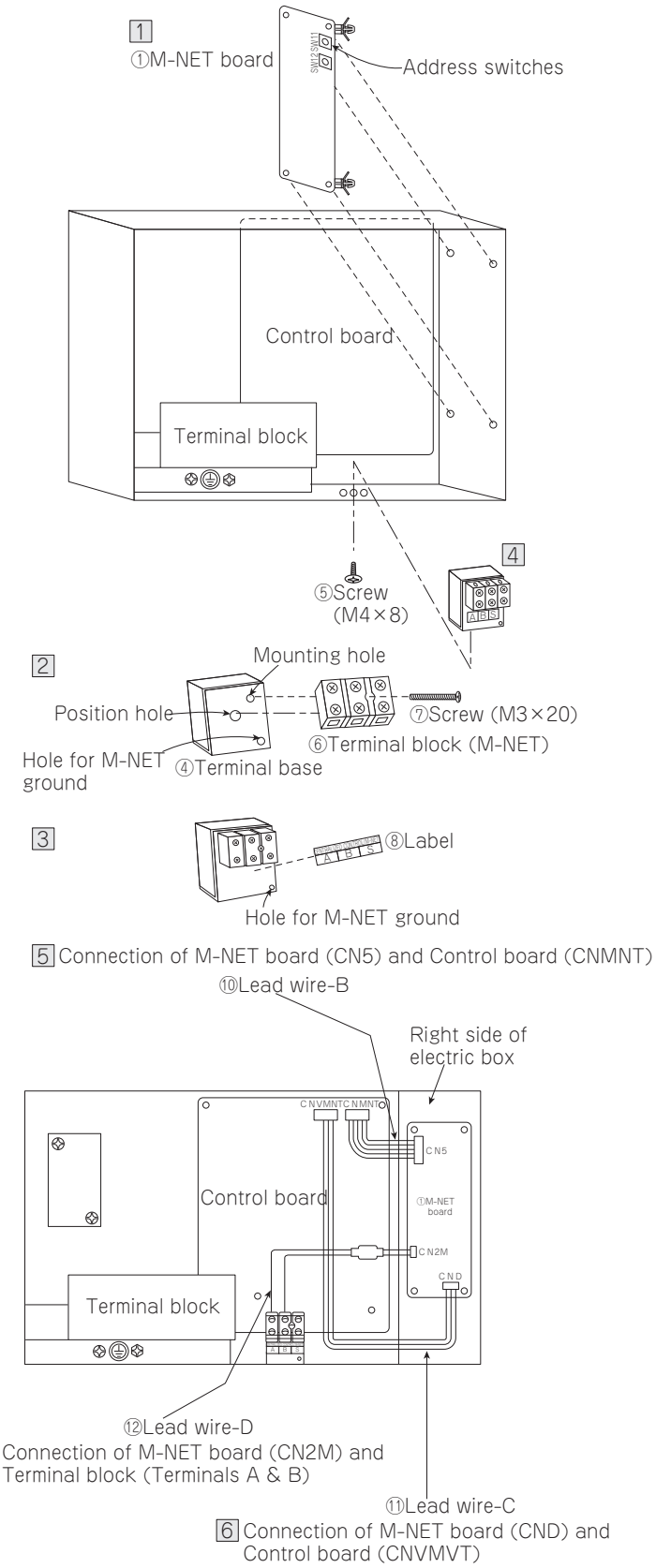

1 Install the M-NET board ① so that the (SW11, SW12) come front.
※Put it securely until it sounds click.

2 Install the Terminal block (M-NET) ⑥ on the Terminal base ④.
※The Terminal base ④ has round boss for positioning.
Match the round boss to the holes of the Terminal base ④.

3 Put the Label ⑧ on the Terminal base ④
.
※Not to close the Hole for M-NET ground.

4 Install the Terminal base ④ on the bottom inside of the electric box.

5 Connect the lead wire-B ⑩ to both the connector CN5 on the M-NET board ① and the connector CNMNT on the control board.
※Caution
Wire Marking:NON-INV, Connector color:White Always make sure that the markings and the applicable model match. If used incorrectly, parts could be damaged.

6 Connect the lead wire-C ⑪ to both the connector CND on the M-NET board ① and the connector CNVMNT on the control board.

7 Connect the lead wire-D ⑫ to both the connector CN2M on the M-NET board ① and the terminals A & B on the terminal block (M-NET) ⑥.

8 The lead wires should be tied together with the other lead wires with the pull tight ⑭ not to loose.
Wiring length is adjusted according to apparatus.

It progresses to the xx page
"3.Wiring method for M-NET"

Note1:Use ground wire and screw ⑬ as required to connect the shield of M-NET transmission line to the unit.
Note2:Take great care that no lead wire is caught on anything when instaling panels.

2. Installation procedure【Applicable model : Group D】

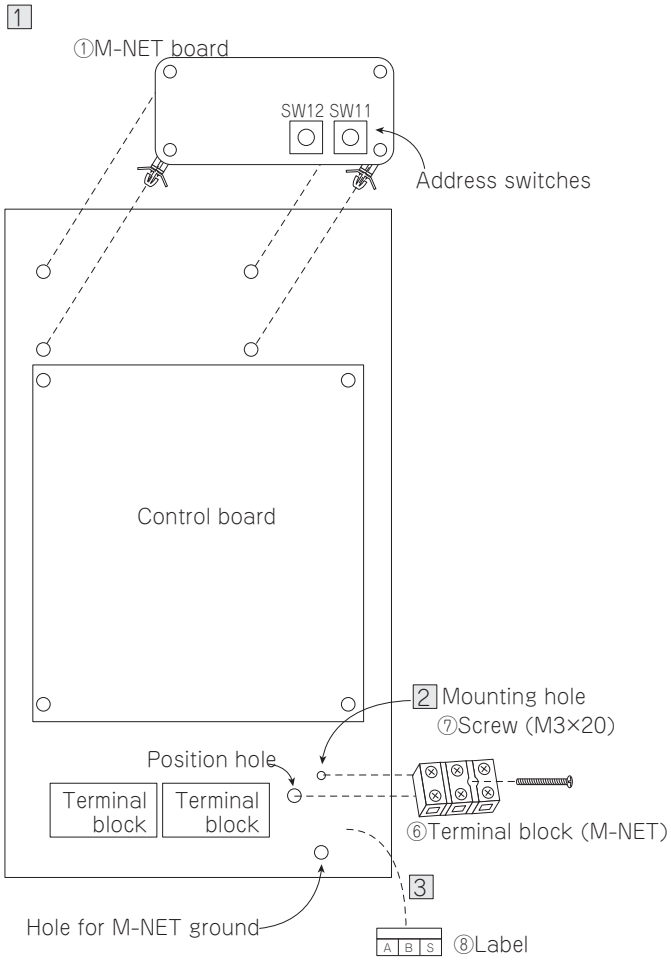

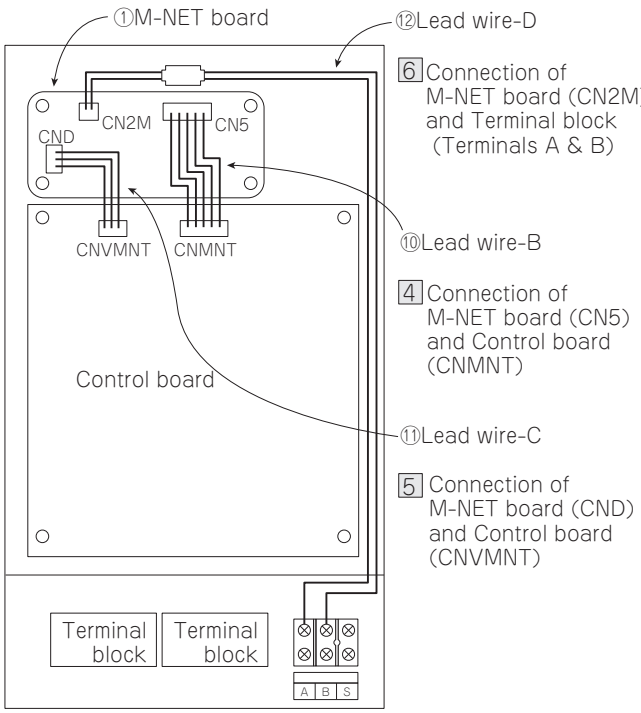

1 Install the M-NET board ① so that the (SW11, SW12) come front.
※Put it securely until it sounds click.

2 Install the Terminal block (M-NET) ⑥ on the base of the electric box.

3 Put the Label ⑧ on the base of the electric box.

4 Connect the lead wire-B ⑩ to both the connector CN5 on the M-NET board ① and the connector CNMNT on the control board.
※Caution
Wire Marking:NON-INV, Connector color:White Always make sure that the markings and the applicable model match. If used incorrectly, parts could be damaged.

5 Connect the lead wire-C ⑪ to both the connector CND on the M-NET board ① and the connector CNVMNT on the control board.

6 Connect the lead wire-D ⑫ to both the connector CN2M on the M-NET board ① and the terminals A & B on the terminal block (M-NET) ⑥.

7 The lead wires should be tied together with the other lead wires with the pull tight ⑭ not to loose.
Wiring length is adjusted according to apparatus.

It progresses to the xx page
"3.Wiring method for M-NET"

Note1:Use ground wire and screw ⑬ as required to connect the shield of M-NET transmission line to the unit.
Note2:Take great care that no lead wire is caught on anything when instaling panels.

2. Installation procedure【Applicable model : Group E】

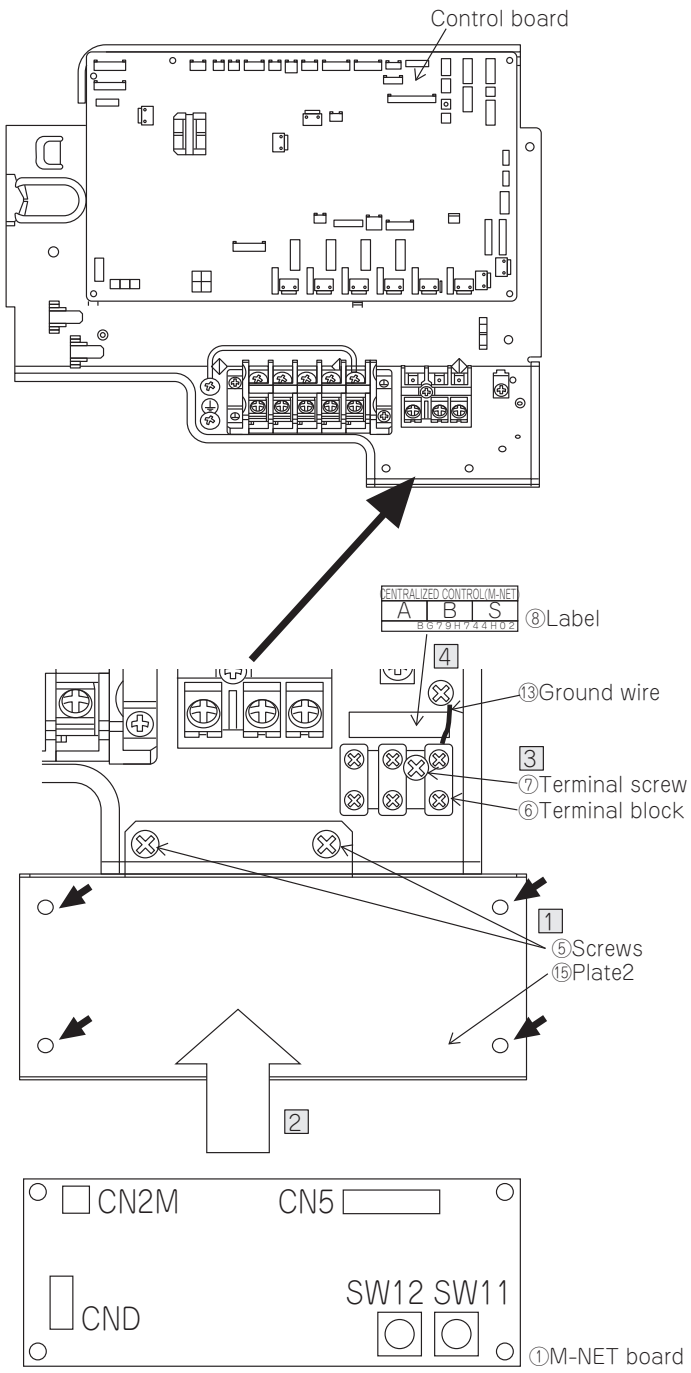

1 Attach the Plate 2 ⑮, using two screws ⑤.

2 Install M-NET board ① (with insulation sheets and supports) on the Plate2 ⑮ .
※Push it firmly until you hear it "click".

3 Use terminal screw ⑦ to secure terminal block⑥
※Terminal block⑥ has a round boss for positioning:Fit the round boss into the positioning hole in steel-plate.

4 Paste label ⑧

5 Use lead wire-A ⑨ to connect CN5 of M-NET board ① connection and CNMNT of outdoor control board.
※Caution
Wire Marking:INV type, Connector color:Red Always make sure that the markings and the applicable model match. If used incorrectly, parts could be damaged.

6 Use lead wire-C ⑪ to connect CND of M-NET board ① connection and CNVMNT of outdoor control board.

7 Use lead wire-D ⑫ to connect CN2M of M-NET board ① connection and terminals A and B of terminal block ⑥ Polarity is not a concern.
※Connect the wire firmly making sure that the screws on terminal block are not loose.

8 The lead wires should be tied together with the other lead wires with the pull tight ⑭ not to loose.
Wiring length is adjusted according to apparatus.

It progresses to the xx page
"3.Wiring method for M-NET"

Note1:Use ground wire and screw ⑬ as required to connect the shield of M-NET transmission line to the unit.
Note2:Take great care that no lead wire is caught on anything when instaling panels.

2. Installation procedure【Applicable model : Group F】

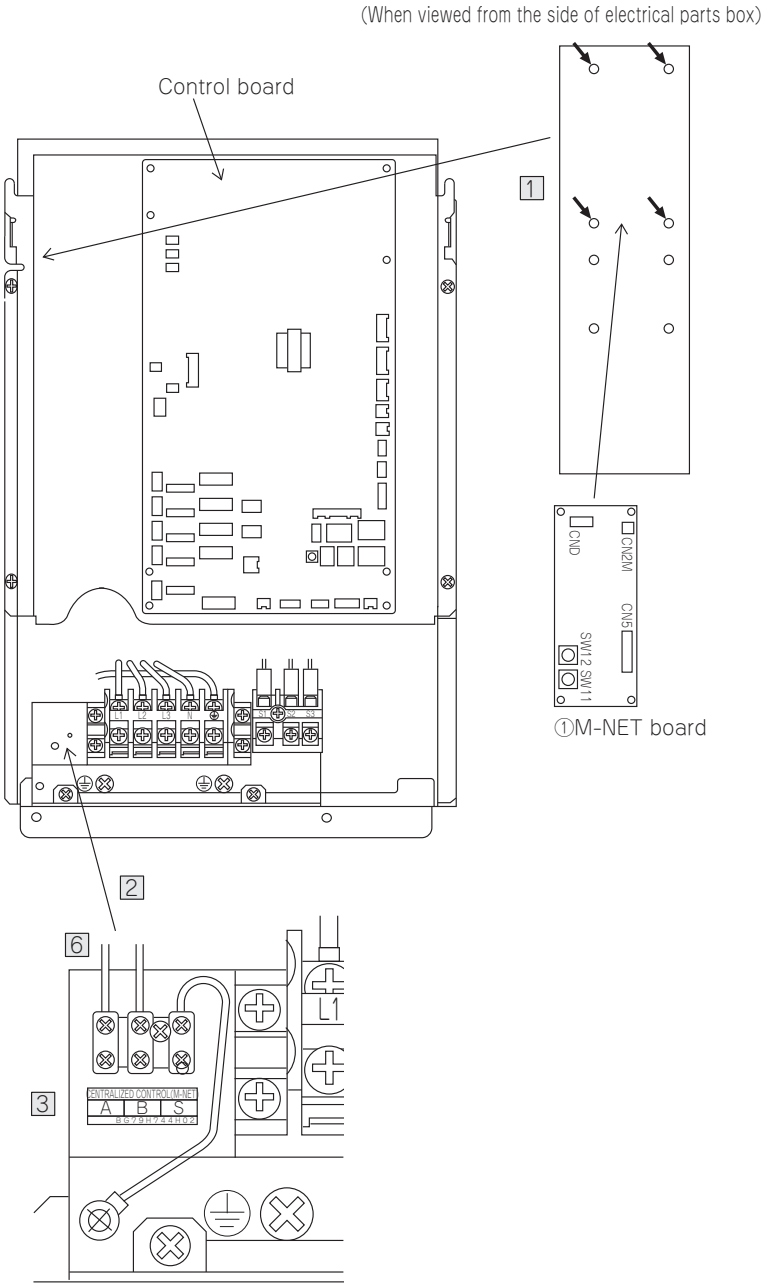

1 Install M-NET board ① (with insulation sheets and supports) on the side of electric box .
At the four point indicated by arrows.
※Push it firmly until you hear it "click".

2 Use terminal screw ⑦ to secure terminal block⑥
※Terminal block⑥ has a round boss for positioning:Fit the round boss into the positioning hole in steel-plate.

3 Paste label ⑧ under terminal block ⑥

4 Use lead wire-A ⑨ to connect CN5 of M-NET board ① connection and CNMNT of outdoor control board.
※Caution
Wire Marking:INV type, Connector color:Red
Always make sure that the markings and the applicable model match. If used incorrectly, parts could be damaged.

5 Use lead wire-C ⑪ to connect CND of M-NET board ① connection and CNVMNT of outdoor control board.

6 Use lead wire-D ⑫ to connect CN2M of M-NET board ① connection and terminals A and B of terminal block ⑥
Polarity is not a concern.
※Connect the wire firmly making sure that the screws on terminal block are not loose.

7 The lead wires should be tied together with the other lead wires with the pull tight ⑭ not to loose.
Wiring length is adjusted according to apparatus.

It progresses to the xx page
"3.Wiring method for M-NET"

Note1:Use ground wire and screw ⑬ as required to connect the shield of M-NET transmission line to the unit.
Note2:Take great care that no lead wire is caught on anything when instaling panels.

2. Installation procedure 【Applicable model : Group G】

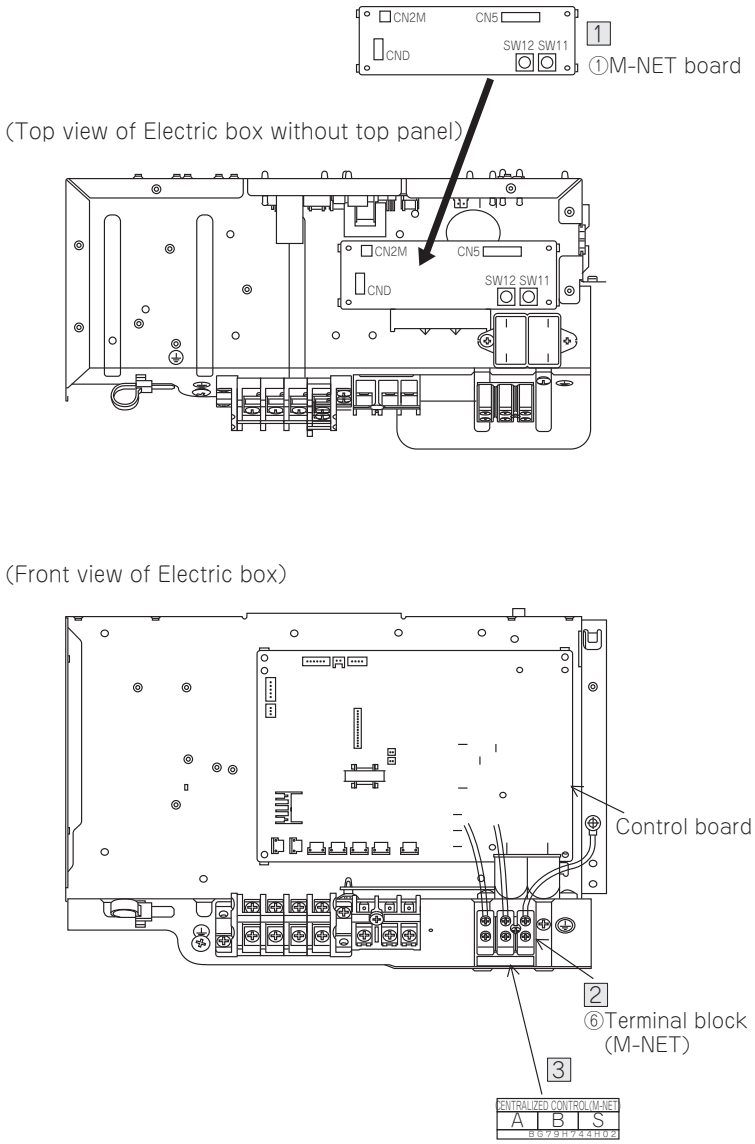

1 The M-NET board ① is installed in the bottom of electric box so that the DIP switches (SW11,SW12) come front.
※Push it firmly until you hear it "click".

2 Use terminal screw ⑦ to secure terminal block⑥
※Terminal block⑥ has a round boss for positioning:Fit the round boss into the positioning hole in steel-plate.

3 Paste label ⑧ under terminal block ⑥

4 Use lead wire-B ⑩ to connect CN5 of M-NET board ① connection and CNMNT of outdoor control board.
※Caution
Wire Marking:NON-INV, Connector color:White Always make sure that the markings and the applicable model match. If used incorrectly, parts could be damaged.

5 Use lead wire-C ⑪ to connect CND of M-NET board ① connection and CNVMNT of outdoor control board.

6 Use lead wire-D ⑫ to connect CN2M of M-NET board ① connection and terminals A and B of terminal block ⑥ Polarity is not a concern.
※Connect the wire firmly making sure that the screws on terminal block are not loose.

7 The lead wires should be tied together with the other lead wires with the pull tight ⑭ not to loose.
Wiring length is adjusted according to apparatus.

It progresses to the xx page "3.Wiring method for M-NET"

Note1:Use ground wire and screw ⑬ as required to connect the shield of M-NET transmission line to the unit.
Note2:Take great care that no lead wire is caught on anything when instaling panels.

2. Installation procedure 【Applicable model : Group H】

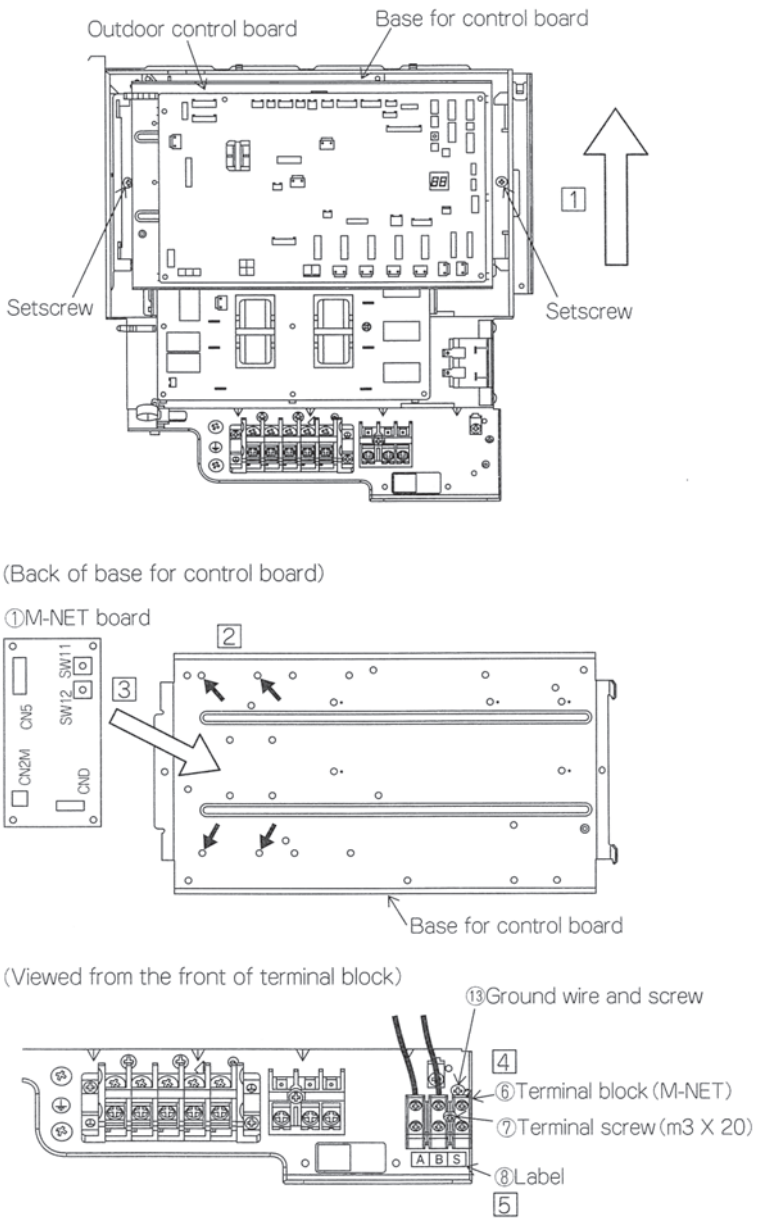

1 Remove the two screws that secure the control board base of electrical parts box, and then slide the base in the direction of the arrow to remove it from the electrical parts box.

2 Check for the four ① board attachment holes (arrows) in the back of control board base (the control board is attached to the surface).

3 Attach the ① board (with insulating sheet and support) so that the rotary switch faces up.

4 Use terminal screw ⑦ to secure terminal block⑥
※Terminal block⑥ has a round boss for positioning:Fit the round boss into the positioning hole in steel-plate.

5 Paste label ⑧ under terminal block ⑥

6 Use lead wire-A ⑨ to connect CN5 of M-NET board ① connection and CNMNT of outdoor control board.
※Caution
Wire Marking:INV type, Connector color:Red
Always make sure that the markings and the applicable model match. If used incorrectly, parts could be damaged.

7 Use lead wire-C ⑪ to connect CND of M-NET board ① connection and CNVMNT of outdoor control board.

8 Use lead wire-D ⑫ to connect CN2M of M-NET board ① connection and terminals A and B of terminal block ⑥ Polarity is not a concern.
※Connect the wire firmly making sure that the screws on terminal block are not loose.

9 The lead wires should be tied together with the other lead wires with the pull tight ⑭ not to loose.
Wiring length is adjusted according to apparatus.

It progresses to the 11 page
"3.Wiring method for M-NET"

Note1:Use ground wire and screw ⑬ as required to connect the shield of M-NET transmission line to the unit.
Note2:Take great care that no lead wire is caught on anything when instaling panels.

3. Wiring method for M-NET

(1) Attention

① Outside of the unit, the wires for transmission (called for transmit wires later) should keep away (5 cm or more) from power cable not to receive electric noise. (Never put the transmit wires and power cable in the same cable pipe.)

② Never supply voltage 220V-240V to the terminals (TB7) for transmission. If the voltage is supplied, it can break the electronic parts on the A-M CONVERTER board.

③ Use the shielded cable (CVVS, CPEVS) of 1.25mm square thickness with 2 wires for the transmission cable. Never use transmit wires of different system with a cable which contains multi wires. The communication of transmit signals will not work properly and it can cause wrong operation.

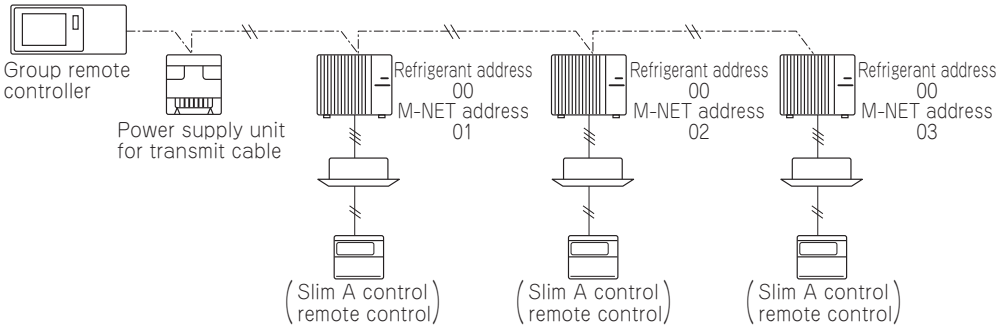

Between the outdoor units, it is OK that only M-NET wiring (2 wires, no polarity) is done.

(2) M-NET address setting

Make M-NET setting and refrigerant address setting on only outdoor unit.
There is no address settings for outdoor unit and remote controller like City Multi system.

The M-NET address setting for taking into centralized control system should be done only to the outdoor unit.
The address set number should be 1-50 same as for City Multi indoor unit and make set in order of number for the same group.

	A control slim	City Multi (M-NET)
Indoor unit	————	1～50
Outdoor unit	1～50	51～100
Remote controller	————	101～150
System controller	201～250	
Group remote controller	201～250	

The setting should be done by rotary switches SW11 for one figure and SW12 for double figures on A-M CONVERTER of the outdoor unit. (Factory settings are all zero.)

〈 Example 〉

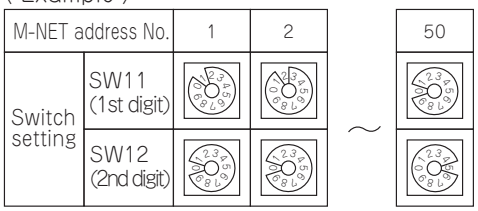

OPTIONAL PARTS

(3) Refrigerant address setting

In case that the A control Slim is set for group between different refrigerant (when multiple refrigerant system is set in one group), it is necessary to make refrigerant address setting besides the wiring for remote controller (TB5) between the indoor untis.

In case that the group setting is not done, be sure to leave the refrigerant address set for 00.

The refrigerant address is set by dip switch SW1 (3-6) on the outdoor controller of the outdoor unit.

(Factory settings are all OFF ・・・・・Refrigerant address 00).

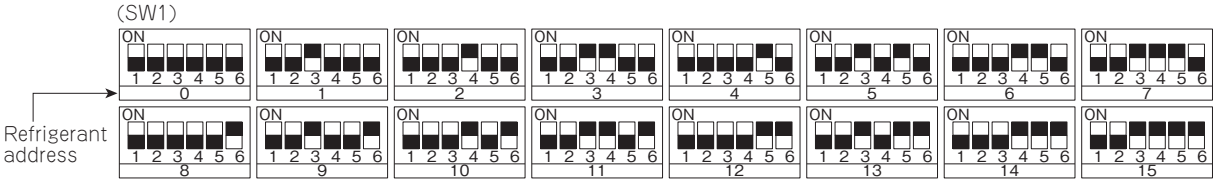

(4) Limitation for address settings

In case of group operation, the M-NET address settings and the refrigerant address settings should be done with the procedure above.

However, make the minimum M-NET address settings in the group for the outdoor unit which has the refrigerant address 00.

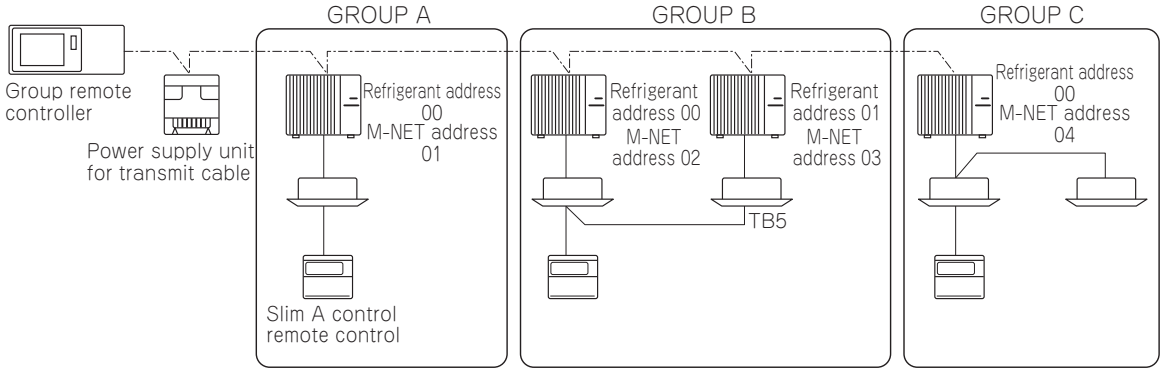

※It does not matter if the refrigerant address settings are same with the different group.

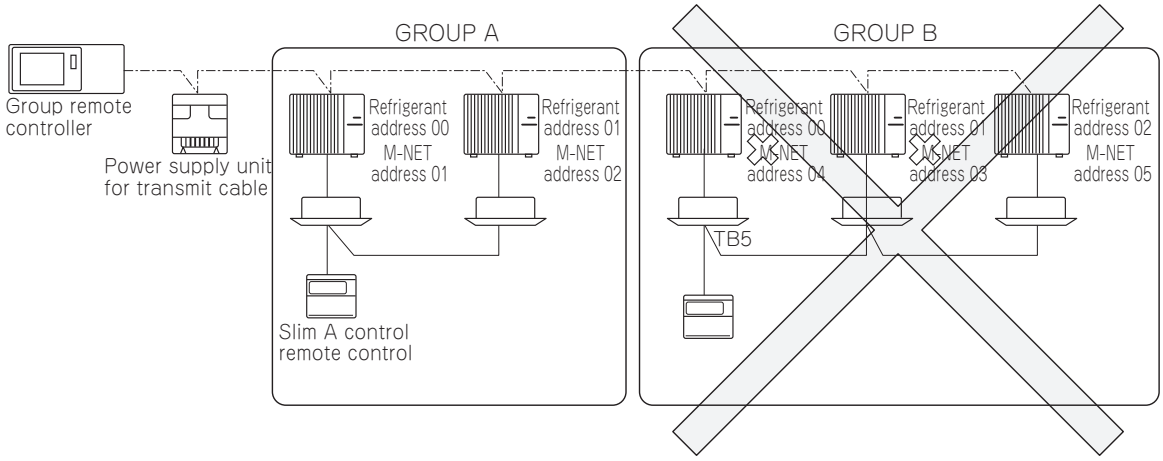

※It is not good with the above setting in the group B because the outdoor unit which has the refrigerant address 00 does not have the minimum M-NET address 3 in the group. Make the outdoor unit of the refrigerant address set with the minimum address in the group like the group A.

(5) Switch 1-2 setting

SW1-2 Selection	Function	Function details	Initial setting	Effective timing
ON 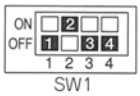 	Turn the switch ON when MA remote controller or wireless remote controller is connected to indoor unit. 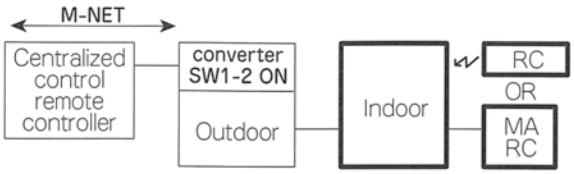 converter : A-M converter board MA RC : MA remote controller RC : wireless remote controller	<FUNCTION> Set the connection of MA-remote controller or wireless remote controller to the indoor unit. ON : exist (initial setting) OFF : not exist <NOTE> In case of switch is ON, transmission error between converter and M-NET remote controllers does not be detected, and converter operates continuously.	ON	Always
OFF 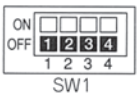 	Turn the switch OFF when MA remote controller or wireless remote controller is NOT connected to indoor unit. 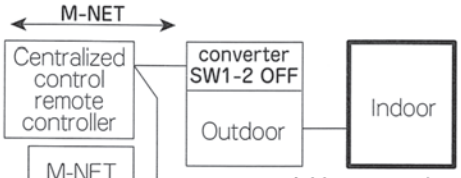 converter : A-M converter board MA RC : MA remote controller M-NET RC : M-NET remote controller			

A-M converter board

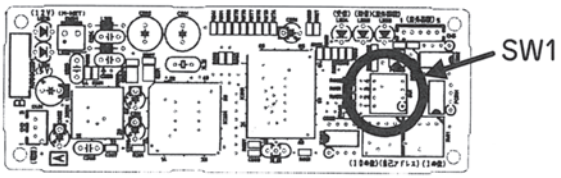

Attention for A control Slim M-NET connection

Pay attention to the next points for wiring of shielded wires.

⚠CAUTION	
The shielded wires of M-NET transmission should be connected with the ground wire at any only one place of the unit to be connected.	It can cause the transmission error due to noise. Outdoor unit digital LED display reads "Ed" error. Centralized control remote controller reads "0403" error.

×Bad example (Multiple ground of shielded wire)

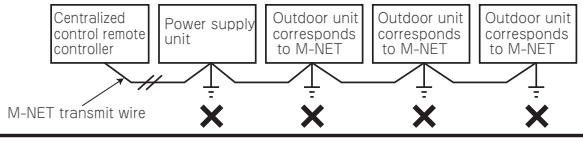

○Good example (One spot ground of shielded wire) ※

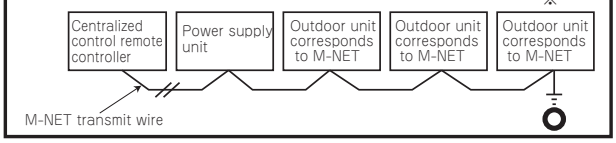

○Good example (One spot ground of shielded wire)

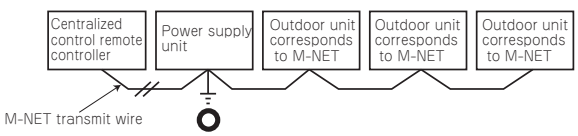

※In case that the outdoor unit is grounded, connect the ground wire supplied as accessory to the S terminal (secondary) of M-NET terminal block and M-NET Ground terminal inside of electric box with using screws supplied.

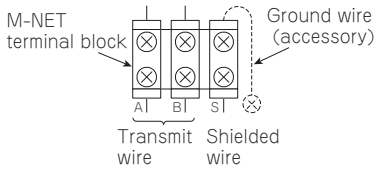

OPTIONAL PARTS

Control / Service Tool

PAC-SK52ST

Photo

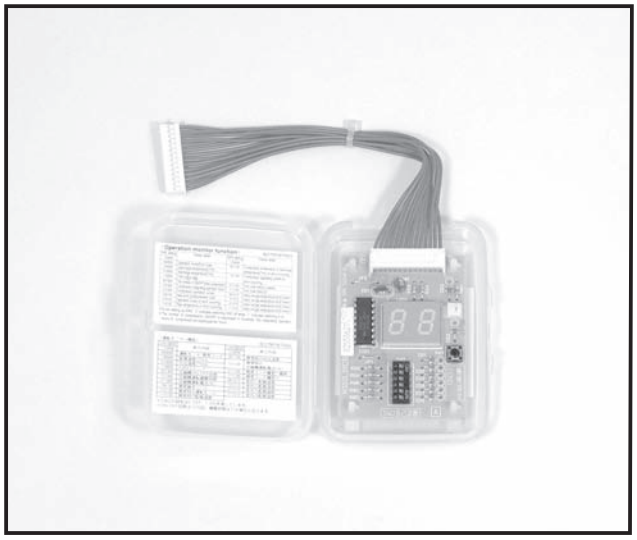

Descriptions

This item is used to display operation and self-diagnosis state.

Applicable Models

- All PUHZ-HRP
- All PU(H)-P
- All PUHZ-RP outdoor Units (A-control)
- All PUHZ-P

Specifications

Power	5V DC (supplied from outdoor unit control board)
Temperature	-20 to 60℃, Humidity: 90%RH or less (no condensation)
External dimensions	69 (W) x 91 (H) x 27 (D) (mm), excluding lead wires
Weight	0.05kg

How to Use / How to Install

- Notes on Use
  - Before installing / removing a control / service tool, nake sure that the main power to this unit is turned OFF.
  - The connector for control / service tool has a lock. Connection / removal of the connector must be dine with the locking lever pressed.

- How to Use
  1. Connect the control / servide tool connector to the [CNM] connector on the outdoor unit control board.
  2. Operating the control / service tool's DIP switch "SW2" causes "LED1" to display the operation state and inspection code description using 2-digit value and symbols. "SW2" setting varies with the unit to be connected. For details of the display content, refer to the appropriate service handbook.
  3. After the control / service tool has been used, remove it from the outdoor unit control board.

Remote On/Off Input Signal Adaptor PAC-SC36NA

Photo

Descriptions

·This adapter connects the relay circuit and the outdoor unit control board to enable low noise mode or demand function using external input.
·All parts besides the wires for connection (timer,switch,relay, etc.) must be procured locally.

Applicable Models

- PUHZ-HRP·HA2
- PU(H)-P·HA
- PUHZ-RP·HA4/KA
- MXZ-8A140VA
- PUHZ-P·HA3

Specifications

Function	Inputs signal of low noise mode or demand function to the outdoor unit control board.
Input signal	No-voltage contact (ON/OFF level signal)
Connector	3P(connector to CNDM,CN3D,CN3S on outdoor unit control board)
Cable type	3-wire cable,for extension:sheathed vinyl cord or cable (0.5 to 1.25mm²)
Cable length	3m (max.10m when extended locally)

Dimensions

Unit : mm

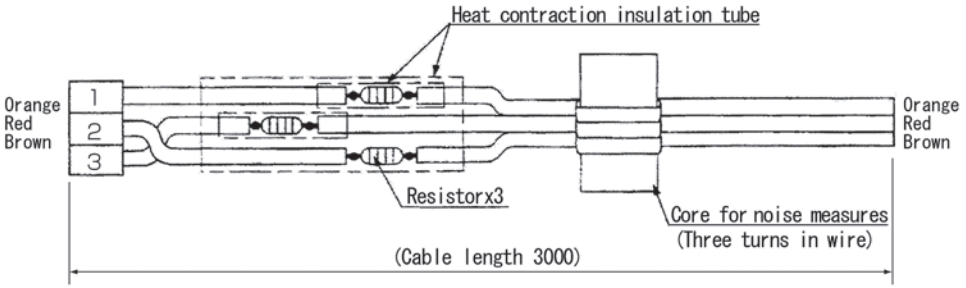

How to Use / How to Install

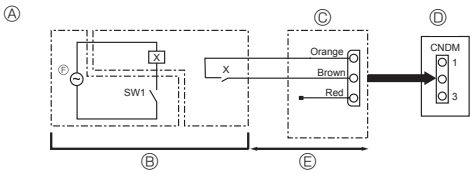

Fig. 1

Ⓐ Circuit diagram example (low noise mode)
Ⓑ On-site arrangement
Ⓒ External input adapter (PAC-SC36NA)
Ⓓ Outdoor unit control board
Ⓔ Max. 10 m
Ⓕ Power supply for relay
X: Relay

Low noise mode (on-site modification) (Fig. 1)

By performing the following modification, operation noise of the outdoor unit can be reduced by about 3-4 dB.
The low noise mode will be activated when a commercially available timer or the contact input of an ON/OFF switch is added to the CNDM connector (option) on the control board of the outdoor unit.

- The ability varies according to the outdoor temperature and conditions, etc.

① Complete the circuit as shown when using the external input adapter (PAC-SC36NA). (Option)
② SW1 ON: Low noise mode
SW1 OFF: Normal operation

Ⓐ

PUHZ-HRP/P type, MXZ-8A140VA

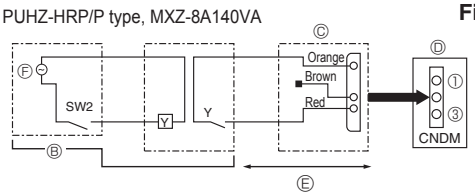

Fig. 2

PUHZ-RP·HA4/KA

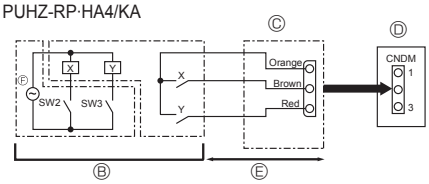

Fig. 3

Ⓐ Circuit diagram example (Demand function)
Ⓑ On-site arrangement
X, Y: Relay
Ⓒ External input adapter (PAC-SC36NA)
Ⓓ Outdoor unit control board
Ⓔ Max. 10 m
Ⓕ Power supply for relay

Demand function (on-site modification) (Fig. 2)(Fig. 3)

By performing the following modification, energy consumption can be reduced to 0 –100% of the normal consumption.
The demand function will be activated when a commercially available timer or the contact input of an ON/OFF switch is added to the CNDM connector (option) on the control board of the outdoor unit.

① Complete the circuit as shown when using the external input adapter (PAC-SC36NA). (Option)
② By setting SW7-1 (and SW7-2) on the control board of the outdoor unit, the energy consumption (compared to the normal consumption) can be limited as shown below.

PUHZ-HRP/P type

SW7-1	SW7-2	Energy consumption (SW2 ON)
OFF	OFF	0% (Stop)
ON	OFF	50%
OFF	ON	75%

MXZ-8A140VA

SW7-1	Power consumption when SW2 is on
OFF	0% (Forced compressor stop)
ON	50%

PUHZ-RP·HA4/KA

SW7-1	SW2	SW3	Energy consumption
ON	OFF	OFF	100%
	ON	OFF	75%
	ON	ON	50%
	OFF	ON	0%(Stop)

OPTIONAL PARTS

Photo

PAC-IF011B/012B-E

Descriptions

With Step Interface, local units can be connected with P series heat pump outdoor units.

Applicable Models

Model	PAC-IF010-E PAC-IF011B-E	PAC-IF012B-E
Applicable Model	PUHZ-HRP·HA2 PUHZ-HRP·HA4/KA PUHZ-P·HA3	PUHZ-HRP·HA2 PUHZ-HRP·HA4/KA PUHZ-P·HA3 PUH-P·HA

Specifications

Model	PAC-IF010-E	PAC-IF011B-E	PAC-IF012B-E
Type	PCB only (10set)	Cased	Cased
Power supply	220-240V AC,50Hz	220-240V AC,50Hz	220-240V AC,50Hz
Thermistor	—	Target temp.(TH1) Pipe temp./Liquid (TH2)	Target temp.(TH1) Pipe temp./Liquid (TH2) Pipe temp./Cond./eva (TH5)

Dimensions

Unit : mm

[PAC-IF011B-E, PAC-IF012B-E]

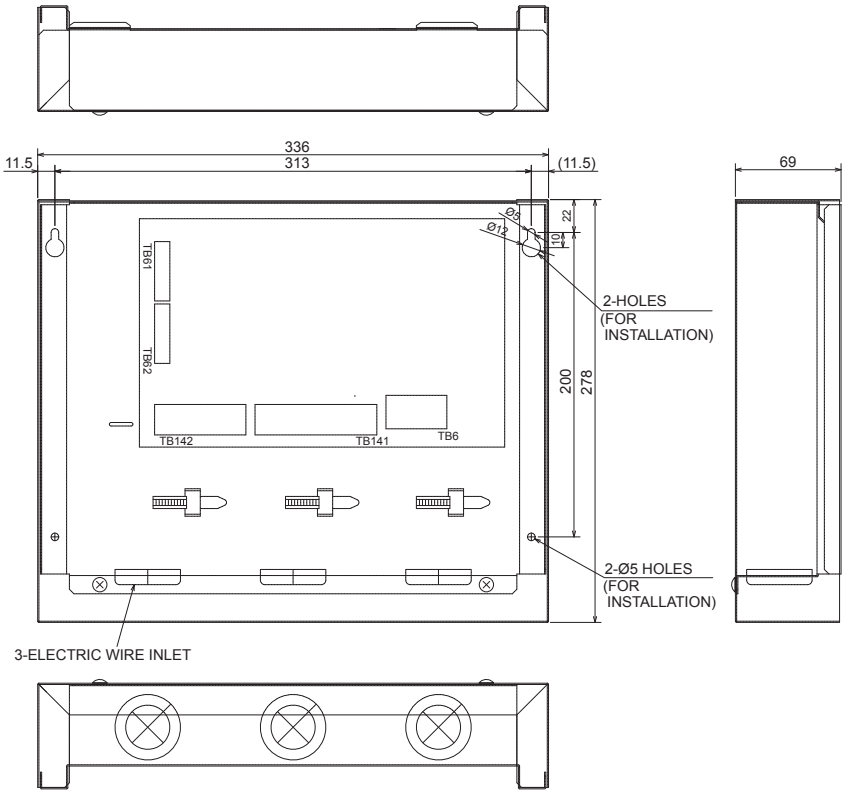

OPTIONAL PARTS

How to Use / How to Install

[PAC-IF011B-E, PAC-IF012B-E]

2. Installing the interface unit

IF011

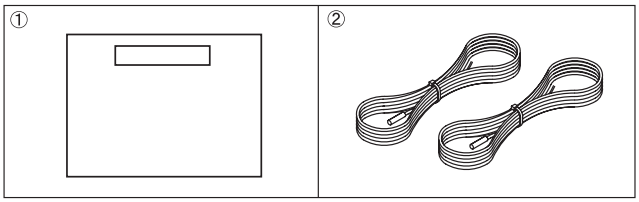

IF012

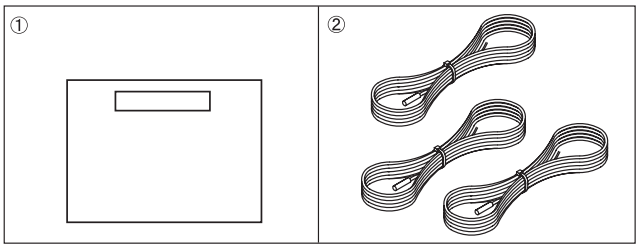

Fig. 2-1

2.1. Check the parts (Fig. 2-1)

The interface unit should be supplied with the following parts.

	Part Name	IF011	IF012
①	Interface unit	1	1
②	Thermistor	2	3

2.2. Choosing the interface unit installation location

- Do not install the interface unit in outdoor location as it is designed for indoor installation only. (The interface board and casing are not waterproof.)
- Avoid locations where the unit is exposed to direct sunlight or other sources of heat.
- Select a location where easy wiring access to the power source is available.
- Avoid locations where combustible gases may leak, be produced, flow, or accumulate.
- Select a level location that can bear the weight and vibration of the unit.
- Avoid locations where the unit is exposed to oil, steam, or sulfuric gas.

2.3. Installing the interface unit (Fig. 2-2, Photo.2-1)

1. Remove 2 screws from interface unit and remove the cover.
2. Install the 4 screws (locally supplied) in 4 holes.
   Ⓐ Screw Ⓑ Cover
   Ⓒ Hole for installation

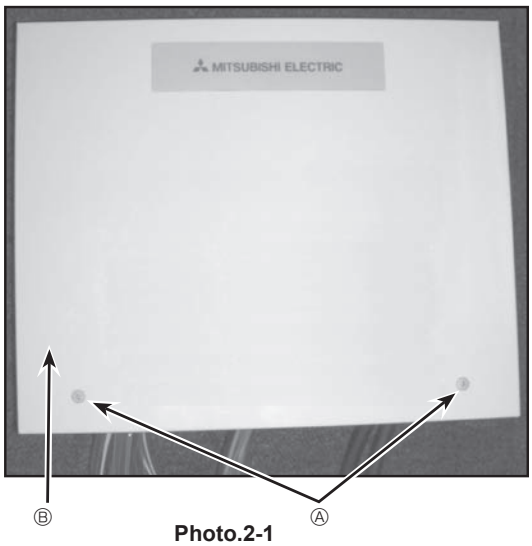

Photo.2-1

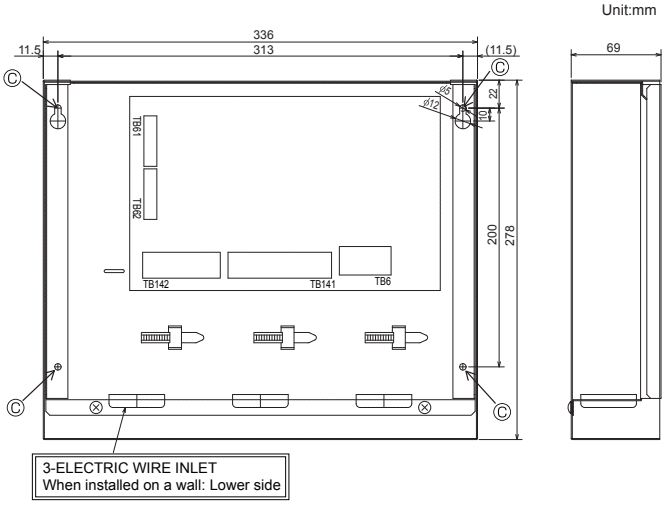

Fig.2-2

OPTIONAL PARTS

3. Electrical work

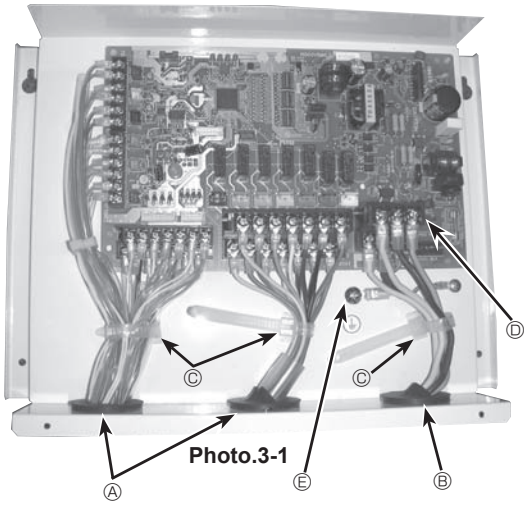

Photo.3-1

3.1. Interface unit (Photo. 3-1)

1. Remove the cover.
2. Wire the power cable and control cable separately through the respective wiring inlets given in the photo.

• Do not allow slackening of the terminal screws.

Ⓐ Inlet for control cable
Ⓑ Inlet for power
Ⓒ Clamp
Ⓓ Interface / Outdoor unit connecting terminals
Ⓔ Earth terminal

3.1.1. Interface unit power supplied from outdoor unit

The following connection patterns are available.
The outdoor unit power supply patterns vary on models.

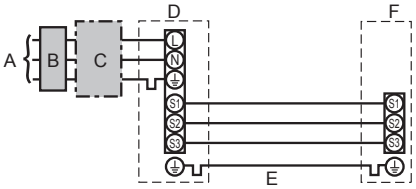

A Outdoor unit power supply
B Earth leakage breaker
C Wiring circuit breaker or isolating switch
D Outdoor unit
E Interface unit/outdoor unit connecting cables
F Interface unit

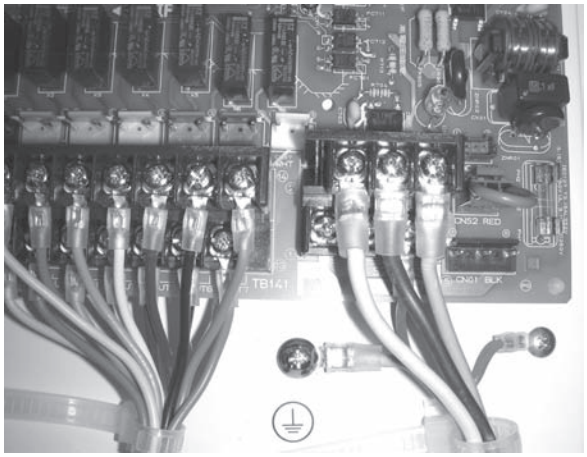

Photo.3-2

Interface unit model			PAC-IF011/012B-E
Wiring Wire No. × size (mm²)	Interface unit-Outdoor unit	*1	3 × 1.5 (polar)
	Interface unit-Outdoor unit earth	*2	1 × Min. 1.5
Circuit rating	Interface unit-Outdoor unit S1-S2	*2	AC 230 V
	Interface unit-Outdoor unit S2-S3	*3	DC24 V

*1. Max. 80 m
*2. The figures are NOT always against the ground.
S3 terminal has DC 24 V against S2 terminal. However between S3 and S1, these terminals are not electrically insulated by the transformer or other device.

Notes: 1. Wiring size must comply with the applicable local and national code.
2. Power supply cables and interface unit/outdoor unit connecting cables shall not be lighter than polychloroprene sheathed flexible cable. (Design 60245 IEC 57)
3. Install an earth longer than other cables.

3. Electrical work

3.1.2. Separate interface unit/outdoor unit power supplies

The following connection patterns are available.
The outdoor unit power supply patterns vary on models.

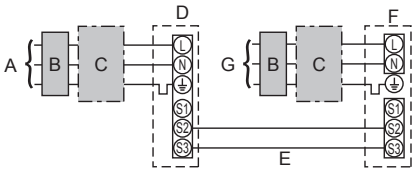

A Outdoor unit power supply
B Earth leakage breaker
C Wiring circuit breaker or isolating switch
D Outdoor unit
E Interface unit/outdoor unit connecting cables
F Interface unit
G Interface unit power supply

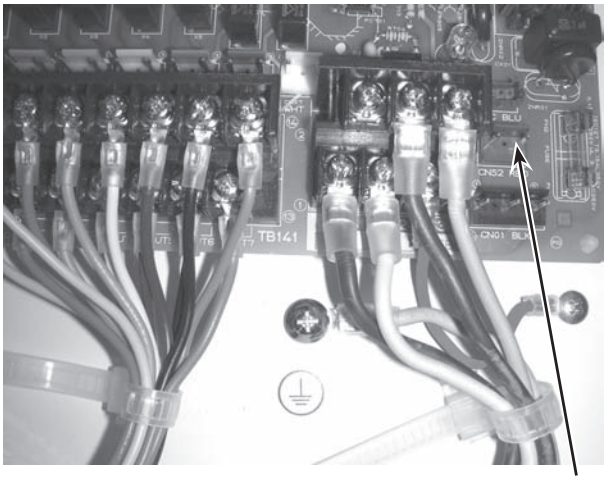

Photo.3-3

If the interface and outdoor units have separate power supplies, refer to the table below.

	Separate power supply specifications
Interface unit controller connector (CNS2) connection change	Disconnected
Outdoor unit DIP switch settings (when using separate interface unit/outdoor unit power supplies only)	ON / OFF: 1 2 3 (SW8) Set the SW8-3 to ON.

Interface unit model			PAC-IF011/012B-E
Interface unit power supply			~/N (Single Phase), 50 Hz, 230 V
Interface unit input capacity Main switch (Breaker)		*1	16 A
Wiring Wire No. × size (mm²)	Interface unit power supply		2 × Min. 1.5
	Interface unit power supply earth		1 × Min. 1.5
	Interface unit-Outdoor unit	*2	2 × Min. 0.3
	Interface unit-Outdoor unit earth		—
Circuit rating	Interface unit L-N	*3	AC 230 V
	Interface unit-Outdoor unit S1-S2	*3	—
	Interface unit-Outdoor unit S2-S3	*3	DC24 V

*1. A breaker with at least 3.0mm contact separation in each pole shall be provided. Use earth leakage breaker (NV).
*2. Max. 120 m
*3. The figures are NOT always against the ground.

Notes: 1. Wiring size must comply with the applicable local and national code.
2. Power supply cables and interface unit/outdoor unit connecting cables shall not be lighter than polychloroprene sheathed flexible cable. (Design 60245 IEC 57)
3. Install an earth longer than other cables.

3.1.3. Connecting thermistor cable

Connect the thermistor ② for the interface controller.

1. Target temp. thermistor (TH1)
   Connect the thermistor for the target temp. to 1 and 2 on the terminal block (TB61) on the interface controller.
2. Pipe temp. thermistor / Liquid (TH2)
   Connect the thermistor for the pipe temp. to 3 and 4 on the terminal block (TB61) on the interface controller.
3. Cond./eva. temp. thermistor (TH5): For PAC-IF012B-E only
   Connect the thermistor for the cond./eva. temp. to 5 and 6 on the terminal block (TB61) on the interface controller.

When the thermistor cables are too long, cut it to the appropriate length.
Do not bind it in the interface unit.

Caution:
Do not route the thermistor cables together with power cables.
The sensor part of the thermistor should be installed where user must not touch.
(It is separated by the supplementary insulation from where user may touch.)

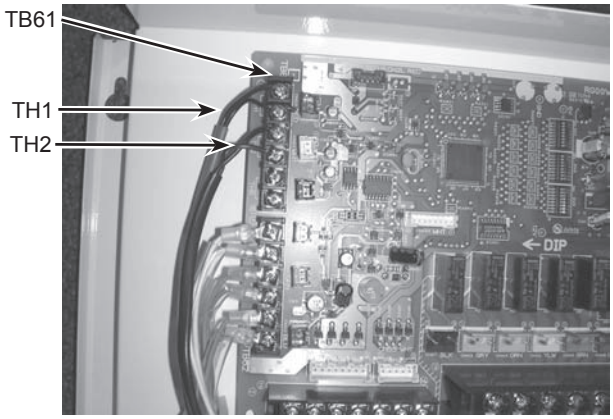

Photo.3-4

3. Electrical work

3.1.4. Connecting external input

Demand control is available by external input.
It is possible to set the outdoor unit's power consumption by setting the switch of the interface controller.

Switch1, Switch 6 : Input selection of inverter capacity setting

Input	SW 1-1	SW 1-2	SW 1-3	SW 6-1	SW 6-2	Step for capacity setting
REMOTE SWITCH Type A (4bit-8 setting)	OFF	OFF	OFF	OFF	OFF	OFF/Step1/Step2/…/Step7/Auto
REMOTE SWITCH Type B (1bit-1 setting)	ON	OFF	OFF	OFF	OFF	OFF/Step1/Step4/Step7/Auto
4-20mA	ON	ON	OFF	ON	ON	OFF/Step1/Step2/…/Step7
1-5V	ON	ON	OFF	OFF	ON	OFF/Step1/Step2/…/Step7
0-10V	OFF	OFF	ON	OFF	OFF	OFF/Step1/Step2/…/Step7
0-10kΩ	ON	OFF	ON	OFF	OFF	OFF/Step1/Step2/…/Step7/Auto
No input (AUTO mode)	OFF	ON	ON	OFF	OFF	Only Auto mode

- **REMOTE SWITCH Type A (4bit - 8 setting) / Type B (1bit -1 setting)**

TB142 10-11 (COM-IN5)	TB142 10-12 (COM-IN6)	TB142 10-13 (COM-IN7)	TB142 10-14 (COM-IN8)	Step for capacity setting TypeA		TypeB		Remark
OFF	OFF	OFF	OFF	[OFF]	OFF 0%	[OFF]	OFF 0%	OFF
ON	OFF	OFF	OFF	[ON]	Step1 10%	[ON]	Step1 10%	Hz fixed mode
OFF	ON	OFF	OFF		Step2 20%		Step4 50%	
ON	ON	OFF	OFF		Step3 30%		↑ ↑	
OFF	OFF	ON	OFF		Step4 50%		Step7 100%	
ON	OFF	ON	OFF		Step5 70%		↑ ↑	
OFF	ON	ON	OFF		Step6 80%		↑ ↑	
ON	ON	ON	OFF		Step7 100%		↑ ↑	
OFF	OFF	OFF	ON		Auto		Auto	Auto mode

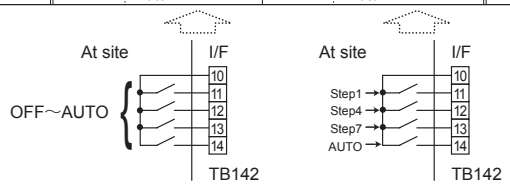

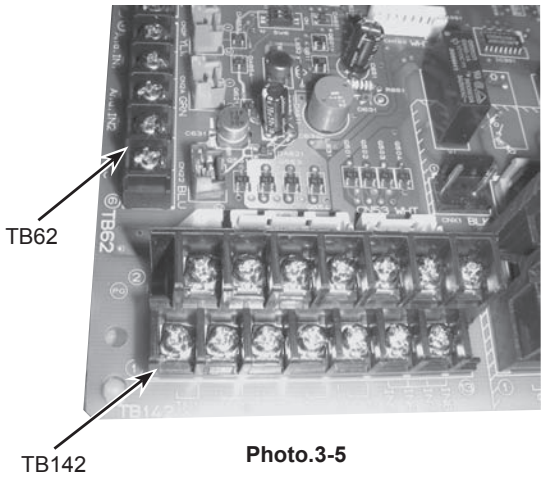

Photo.3-5

Demand control is available by connecting remote switches with terminal No.10 - 14.
Make sure to use the non-voltage switch (for the remote switch)
Remote switch cable length : Maximum 10m
Remote switch : Minimum applicable load DC12V, 1mA

- 4-20mA / 1-5V / 0-10V / 0-10kΩ
  ①Use 4-20mA / 1-5V / 0-10V
  Connect the transmission cables to No. 3 and 4 on the terminal block (TB62).
  No. 3 on the terminal block(TB62) : Plus side
  No. 4 on the terminal block(TB62) : Minus side (Reference side)
  ②Use adjustable resistor (0-10kΩ)
  Connect the transmission cables to No. 1 and 2 on the terminal block (TB62).

Adjustable resistor (0-10kΩ)	4-20mA	1-5V	0-10V	Step for capacity setting	Remark
0~100Ω	4~5mA	0~1.25V	0~0.63V	OFF 0%	Stop
510Ω	7mA	1.75V	1.88V	Step1 10%	Hz fixed mode
1kΩ	9mA	2.25V	3.13V	Step2 20%	
2kΩ	11mA	2.75V	4.38V	Step3 30%	
3.3kΩ	13mA	3.25V	5.63V	Step4 50%	
4.3kΩ	15mA	3.75V	6.88V	Step5 70%	
5.6kΩ	17mA	4.25V	8.13V	Step6 80%	
7.5kΩ	19~20mA	4.75~5V	9.38~10V	Step7 100%	
10kΩ	–	–	–	Auto	Auto mode
OPEN(12kΩ~)	–	–	–	OFF 0%	Stop

*The value of the above-mentioned table becomes the center of the input value.
Cable length : Maximum 10m

- **External function setting**
  This function is setting operation mode or stopping compressor, by the external signal.

TB142	Item	OFF	ON	Remark
1-2 (IN1)	Forced Comp. OFF	Normal	Forced Comp. OFF	
3-4 (IN2)Item	Fixed operation mode	Cooling	Heating	Available when SW2-1 and SW2-2 are ON

Cable length : Maximum 10m
Remote switch : Minimum applicableload DC12V, 1mA

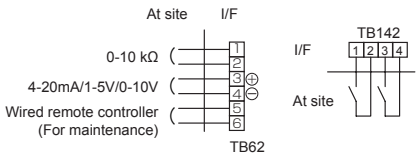

Caution:
The external input signals are separated by basic insulation from power supply for the unit.
The external input signals should be separated by supplementary insulation from where user may touch in case that it is installed where user may touch.
Connect the terminals by using the ring terminals and also insulate the cables of adjoining terminals when wiring to terminal block.

3. Electrical work

3.1.5. Connecting External Output

The signal in the following states can be output.

TB141		Item	OFF	ON
1-2 (OUT1)	X1	Operation Output	OFF	ON
3-4 (OUT2)	X2	Error Output	Normal	Error
5-6 (OUT3)	X3	Comp. Output	OFF(Comp. OFF)	ON (Comp. ON)
7-8 (OUT4)	X4	Defrost Output	OFF	ON (Defrosting)
9-10 (OUT5)	X5	Mode(Cool) Output	OFF	ON (Cooling)
11-12 (OUT6)	X6	Mode(Heat) Output	OFF	ON (Heating)
13-14 (OUT7)	–	–	–	–

Cable length : Maximum 50m
Output specification : Non-voltage switch 1A or less , 240V AC
*Connect the surge absorber according to the load at site.

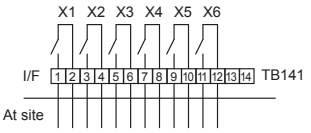

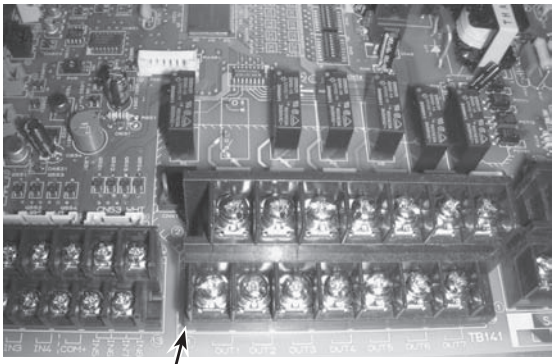

Photo.3-6

TB141

Note : External output signals are separated by basic insulation from other circuit of interface.
Caution : When 2 or more external outputs are used, the power supply on the output side should be the same.

3.1.6. Wiring specification External output / External input
Locally supplied parts

Item	Name	Model and specifications
External output function	External output signal wire	Use sheathed vinyl coated cord or cable. Wire type : CV, CVS or equivalent. Wire size : Stranded wire 0.5mm^2 to 1.25mm^2 Solid wire: ϕ0.65mm to ϕ1.2mm
	Display lamp, etc.	Non-voltage Contact AC220-240V (DC30V), 1A or less
External input function	External input signal wire	Use sheathed vinyl coated cord or cable. Wire type : CV, CVS or equivalent. Wire size : Stranded wire 0.5mm^2 to 1.25mm^2 Solid wire : ϕ0.65mm to ϕ1.2mm
	Switch	Non-voltage "a" contact

3.1.7. Switch setting

It is possible to set the following function by setting the switch of the interface controller.

• SW2-1/2-2 : Fixed operation mode

SW2-1	SW2-2	Details
OFF	OFF	Not FIX (Depending on Remote controller setting)
ON	OFF	[Cooling] FIX
OFF	ON	[Heating] FIX
ON	ON	External input (Depending on TB142-3, 4)

• SW2-3/2-4/2-5 : Fixed set temperature [For Auto mode only]

SW2-3	SW2-4	SW2-5	Details
OFF	OFF	OFF	Not fixed (Remote controller setting)
ON	OFF	OFF	Cooling 19°C/Heating 17°C FIX
OFF	ON	OFF	20°C FIX
ON	ON	OFF	22°C FIX
OFF	OFF	ON	24°C FIX
ON	OFF	ON	26°C FIX
OFF	ON	ON	28°C FIX
ON	ON	ON	Cooling 30°C/Heating 28°C FIX

Set switches in case of auto mode.

• SW2-6 : COND./EVA. TEMP. THERMISTOR (TH5)

SW2-6	Details	Model
OFF	Effect	PAC-IF012B-E
ON	No effect	PAC-IF011B-E

OPTIONAL PARTS

3.1.8.Before test run

After completing installation and the wiring and piping of the local application and outdoor units, check for refrigerant leakage, looseness in the power supply or control wiring, wrong polarity, and no disconnection of one phase in the supply.
Use a 500-volt megohmmeter to check that the resistance between the power supply terminals and ground is at least 1.0MΩ.

Warning:
Do not use the system if the insulation resistance is less than 1.0MΩ.

Caution:
Do not carry out this test on the control wiring (low voltage circuit) terminals.

Local Application Factors

* This interface is to connect Mr. Slim inverter outdoor unit of MITSUBISHI ELECTRIC to local applications. Please check the following when designing the local system.
* MITSUBISHI ELECTRIC does not take any responsibility on the local system design.

1. Heat exchanger

(1) Withstanding pressure

Designed pressure of outdoor unit is 4.15 MPa. Following must be satisfied for burst pressure of connecting application.
Burst pressure : More than 12.45 MPa (3 times more than designed pressure)

(2) Performance

Secure the heat exchanger capacity which meets the following conditions. If the conditions are not met, it may result in malfunction caused by the protection operation or the outdoor unit may be turned off due to the operation of protection system.

1. Evaporate temperature is more than 4℃ in max. frequency operation under ※1the cooling rated conditions.
2. Condense temperature is less than 60℃ in max. frequency operation under ※2the heating rated conditions.
3. In case of hot water supply, condense temperature is less than 58℃ in max. frequency operation with the outside temperature 7℃D.B./6℃W.B.

※1. Indoor: 27℃D.B./19℃W.B. Outdoor: 35℃D.B./24℃W.B.
※2. Indoor: 20℃D.B. Outdoor: 7℃D.B./6℃W.B.

(3) Heat exchanger internal capacity

Heat exchanger internal capacity must be within the capacity range shown below. If the heat exchanger below the minimum capacity is connected, it may result in the back flow of liquid or the failure of the compressor.
If the heat exchanger above the maximum capacity is connected, it may result in the deficiency in performance due to lack of refrigerant or overheating of the compressor.
Minimum capacity : 10 × Model capacity [cm³] / Maximum capacity : 30 × Model capacity [cm³]
e.g. When connecting to PUHZ-RP*100* VHA2
Minimum capacity : 10 × *100* =1000 cm³
Maximum capacity : 30 × *100* =3000 cm³

Model capacity	35	50	60	71	100	125	140	200	250
Maximum capacity [cm³]	1050	1500	1800	2130	3000	3750	4200	6000	7500
Minimum capacity [cm³]	350	500	600	710	1000	1250	1400	2000	2500

(4) Contamination maintenance

1. Wash the inside of heat exchanger to keep it clean. Be sure to rince not to leave flux. Do not use chlorine detergent when washing.
2. Be sure that the amount of contamination per unit cubic content of heat transfer pipe is less than the following amount.
   Example) In case of ϕ9.52mm
   Residual water : 0.6mg/m, Residual oil : 0.5mg/m, Solid foreign object : 1.8mg/m

2. Thermistor position

<Target temp.thermistor (TH1)> (Used only in *auto mode (Only for Air to Air applications))

1. Put thermistor (TH1) where average intake temperature for heat exchanger can be detected.
2. It is better to put thermistor (TH1) where radiant heat from heat exchanger can be avoided.
   To use this interface for manual step control, put a fixed resistor of 4~10kΩ instead of thermistor (TH1 on the terminal block TB61).
   * Auto mode: In this mode, the capacity step of the outdoor unit is controlled automatically to let the target (intake) temperature reach the setting temperature. (Only for air to air application)

<Liquid pipe thermistor(TH2)>

1. Put thermistor (TH2) where liquid refrigerant pipe temperature can be detected.
2. It is better to protect the thermistor (TH2) with heat insulating materials not to be affected by the ambient temperature, etc.
3. In case that the refrigerant is distributed by distributor, put thermistor (TH2) before the distributor.

<Cond./Eva. temp. thermistor (TH5)>

1. Put thermistor (TH5) where Cond./Eva. temperature can be detected on the indoor HEX pipe.