MITSUBISHI ELECTRIC

SPLIT-TYPE, HEAT PUMP AIR CONDITIONERS

October 2021

PARTS CATALOG

R32

No. OCB771
REVISED EDITION-A

Outdoor unit [Model Name]	[Service Ref.]
PUZ-ZM60VHA2 PUZ-ZM60VHA2-ET PUZ-ZM60VHA2-ER	PUZ-ZM60VHA2.UK PUZ-ZM60VHA2-ET.UK PUZ-ZM60VHA2-ER.UK
PUZ-ZM71VHA2 PUZ-ZM71VHA2-ET PUZ-ZM71VHA2-ER	PUZ-ZM71VHA2.UK PUZ-ZM71VHA2-ET.UK PUZ-ZM71VHA2-ER.UK
PUZ-ZM100VKA2 PUZ-ZM100VKA2-ET PUZ-ZM100VKA2-ER	PUZ-ZM100VKA2.UK PUZ-ZM100VKA2-ET.UK PUZ-ZM100VKA2-ER.UK
PUZ-ZM125VKA2 PUZ-ZM125VKA2-ET PUZ-ZM125VKA2-ER	PUZ-ZM125VKA2.UK PUZ-ZM125VKA2-ET.UK PUZ-ZM125VKA2-ER.UK
PUZ-ZM140VKA2 PUZ-ZM140VKA2-ET PUZ-ZM140VKA2-ER	PUZ-ZM140VKA2.UK PUZ-ZM140VKA2-ET.UK PUZ-ZM140VKA2-ER.UK
PUZ-ZM100YKA2 PUZ-ZM100YKA2-ET PUZ-ZM100YKA2-ER	PUZ-ZM100YKA2.UK PUZ-ZM100YKA2-ET.UK PUZ-ZM100YKA2-ER.UK
PUZ-ZM125YKA2 PUZ-ZM125YKA2-ET PUZ-ZM125YKA2-ER	PUZ-ZM125YKA2.UK PUZ-ZM125YKA2-ET.UK PUZ-ZM125YKA2-ER.UK
PUZ-ZM140YKA2 PUZ-ZM140YKA2-ET PUZ-ZM140YKA2-ER	PUZ-ZM140YKA2.UK PUZ-ZM140YKA2-ET.UK PUZ-ZM140YKA2-ER.UK
PUZ-ZM200YKA2	PUZ-ZM200YKA2.UK
PUZ-ZM250YKA2	PUZ-ZM250YKA2.UK

Revision:
- Parts No. of power receiver has been changed in REVISED EDITION-A.

OCB771 is void.

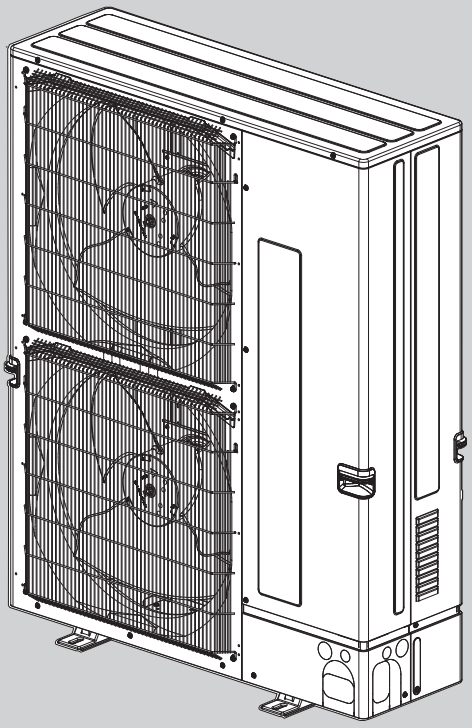

PUZ-ZM100VKA2(-ET/-ER)
PUZ-ZM125VKA2(-ET/-ER)
PUZ-ZM140VKA2(-ET/-ER)
PUZ-ZM100YKA2(-ET/-ER)
PUZ-ZM125YKA2(-ET/-ER)
PUZ-ZM140YKA2(-ET/-ER)
PUZ-ZM200YKA2
PUZ-ZM250YKA2

CONTENTS

1. SERVICE PARTS LIST ····· 2

SERVICE MANUAL (OCH771)

Mr.SLIM

1 SERVICE PARTS LIST

FUNCTIONAL AND ELECTRICAL PARTS

PUZ-ZM60VHA2.UK
PUZ-ZM60VHA2-ET.UK
PUZ-ZM60VHA2-ER.UK

PUZ-ZM71VHA2.UK
PUZ-ZM71VHA2-ET.UK
PUZ-ZM71VHA2-ER.UK

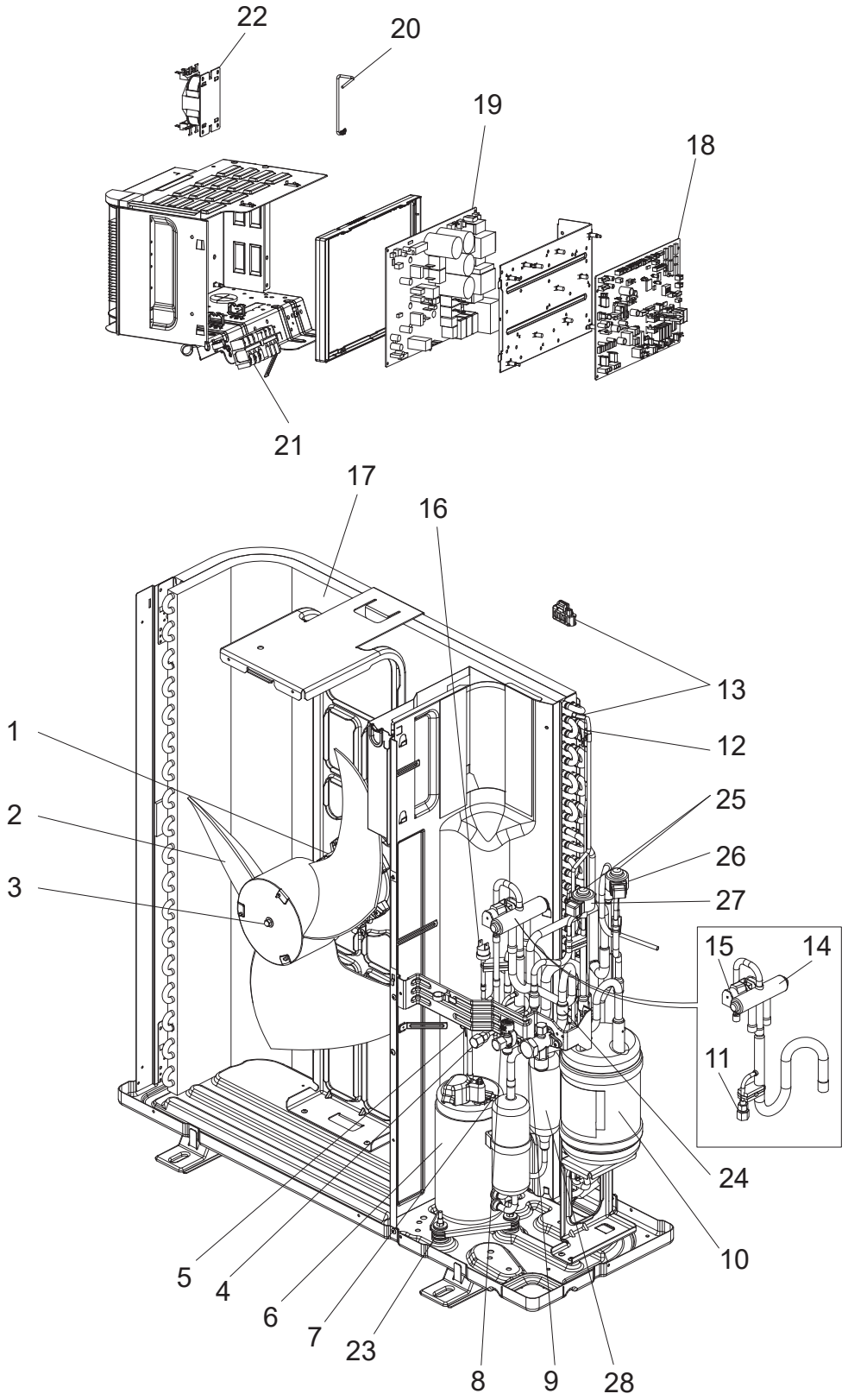

1. The part quantity below indicates the required number of pieces per unit.
2. The circled No. indicates that the part is not shown in the figure.

No.	Parts No.	Parts Name	PUZ-ZM60VHA2.UK	PUZ-ZM60VHA2-ET.UK	PUZ-ZM60VHA2-ER.UK	PUZ-ZM71VHA2.UK	PUZ-ZM71VHA2-ET.UK	PUZ-ZM71VHA2-ER.UK	Wiring Diagram Symbol	Remarks [Drawing No.]
1	S70 E91 763	FAN MOTOR	1	1	1	1	1	1	MF1	
2	S70 K04 115	PROPELLER FAN	1	1	1	1	1	1		
3	S70 K01 097	NUT	1	1	1	1	1	1		
4	S70 E02 413	CHARGE PLUG	1	1	1	1	1	1	SV	
5	S70 E59 202	THERMISTOR	1	1	1	1	1	1	TH4 (Discharge)	
6	S70 E32 400	COMPRESSOR	1	1	1	1	1	1	MC	SVB172FFUM1
7	S70 E84 202	THERMISTOR	1	1	1	1	1	1	TH33 (Comp. Surface)	
8	S70 600 418	STOP VALVE (LIQUID)	1	1	1	1	1	1		3/8'
9	S70 100 418	STOP VALVE (GAS)	1	1	1	1	1	1		5/8'
10	S70 E66 440	POWER RECEIVER (ACCUMULATOR)	1	1	1	1	1	1		
11	S70 E03 413	CHARGE PLUG	1	1	1	1	1	1	SV	
12	S70 E52 202	THERMISTOR-H	1	1	1	1	1	1	TH3 (Liquid)	850 XAP
13	S70 E31 202	THERMISTOR-W	1	1	1	1	1	1	TH6 (2-Phase Pipe) TH7 (Ambient)	850/1050
14	S70 E11 403	4-WAY VALVE (REVERSING VALVE)	1	1	1	1	1	1		
15	S70 E30 242	SOLENOID COIL (4-WAY COIL)	1	1	1	1	1	1	21S4	
16	S70 E10 208H	HIGH PRESSURE SWITCH	1	1	1	1	1	1	63H	OFF 4.14MPA
17	S70 E47 408	HEAT EXCHANGER	1	1	1	1	1	1		
18	S70 E71 315	CONTROLLER BOARD	1	1	1	1	1	1	C.B.	
19	S70 E68 313	POWER BOARD	1	1	1	1	1	1	P.B.	
20	S70 E70 202	THERMISTOR	1	1	1	1	1	1	TH8 (Heat Sink)	
21	S70 E11 716	TERMINAL BLOCK	1	1	1	1	1	1	TB1	6P (L,N,E + S1,S2,S3)
22	S70 K85 259	REACTOR (DCL)	1	1	1	1	1	1	DCL	18 mH
23	S70 E03 004	RUBBER MOUNT	3	3	3	3	3	3		
24	S70 36L 450	STRAINER	1	1	1	1	1	1		#50
25	S70 G10 401	EXPANSION VALVE	2	2	2	2	2	2		B40YGME-3
26	S70 E35 402	LINEAR EXPANSION VALVE COIL	1	1	1	1	1	1		
27	S70 E45 402	LINEAR EXPANSION VALVE COIL	1	1	1	1	1	1		
28	S70 E50 467	MUFFLER (PIPE C-M ASSY)	1	1	1	1	1	1		

FUNCTIONAL AND ELECTRICAL PARTS

PUZ-ZM100VKA2.UK
PUZ-ZM100VKA2-ET.UK
PUZ-ZM100VKA2-ER.UK

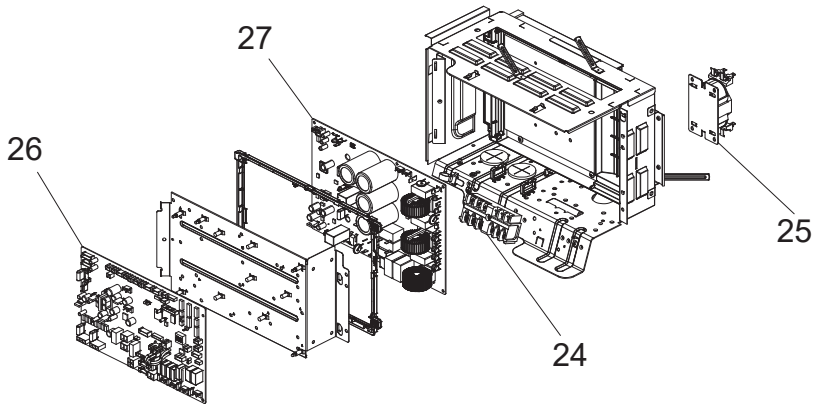

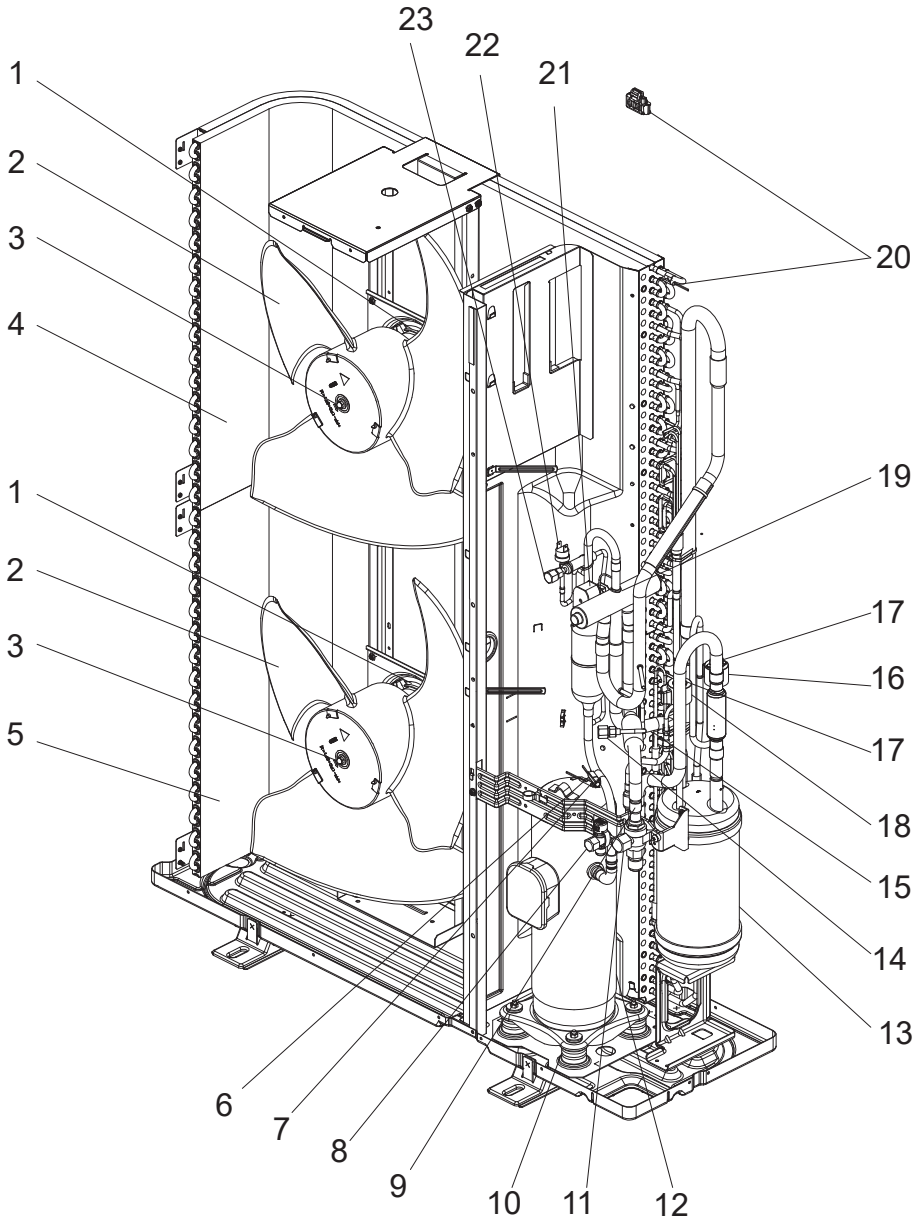

1. The part quantity below indicates the required number of pieces per unit.
2. The circled No. indicates that the part is not shown in the figure.

No.	Parts No.	Parts Name	PUZ-ZM100VKA2.UK	PUZ-ZM100VKA2-ET.UK	PUZ-ZM100VKA2-ER.UK	Wiring Diagram Symbol	Remarks
1	S70 E95 763	FAN MOTOR	2	2	2	MF1, 2	
2	S70 E50 115	PROPELLER FAN	2	2	2		
3	S70 K01 097	NUT	2	2	2		
4	S70 E30 408	HEAT EXCHANGER (TOP)	1	1	1		
5	S70 E35 408H	HEAT EXCHANGER (UNDER)	1	1	1		
6	S70 E57 202	THERMISTOR	1	1	1	TH4 (Discharge)	
7	S70 E71 202	THERMISTOR	1	1	1	TH33 (Comp. Surface)	
8	S70 600 418	STOP VALVE (LIQUID)	1	1	1		3/8"
9	S70 36L 450	STRAINER	1	1	1		50#
10	S70 E02 004	RUBBER MOUNT	4	4	4		
11	S70 E06 411	BALL VALVE (GAS)	1	1	1		5/8"
12	S70 E61 400	COMPRESSOR	1	1	1	MC	DVB28FCGMT
13	S70 E17 440	POWER RECEIVER (ACCUMULATOR)	1	1	1		
14	S70 E02 413	CHARGE PLUG	1	1	1		
15	S70 E58 202	THERMISTOR	1	1	1	TH3 (Liquid)	
16	S70 E50 402	LINEAR EXPANSION COIL	1	1	1		UKV-A295
17	S70 E71 401	EXPANSION VALVE	2	2	2		UKV-25D328
18	S70 E60 402	LINEAR EXPANSION COIL	1	1	1		UKV-A296
19	S70 E14 403	REVERSING VALVE	1	1	1		
20	S70 E85 202	THERMISTOR-W	1	1	1	TH6 (Ambient) TH7 (2-phase pipe)	850/1050
21	S70 E35 242	SOLENOID COIL	1	1	1	21S4	
22	S70 E10 208H	HIGH PRESSURE SWITCH	1	1	1	63H	OFF 4.14 MPA
23	S70 E03 413	CHARGE PLUG	1	1	1		
24	S70 E11 716	TERMINAL BLOCK	1	1	1	TB1	6P (LINE + S1,S2,S3)
25	S70 K85 259	REACTOR	1	1	1		
26	S70 E64 315	CONTROLLER BOARD	1	1	1	C.B.	
27	S70 E69 313	POWER BOARD	1	1	1	P.B.	

FUNCTIONAL AND ELECTRICAL PARTS

PUZ-ZM125VKA2.UK
PUZ-ZM125VKA2-ET.UK
PUZ-ZM125VKA2-ER.UK

PUZ-ZM140VKA2.UK
PUZ-ZM140VKA2-ET.UK
PUZ-ZM140VKA2-ER.UK

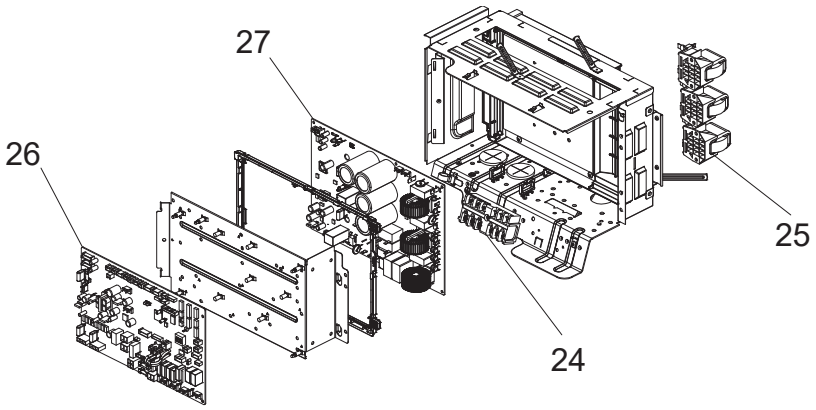

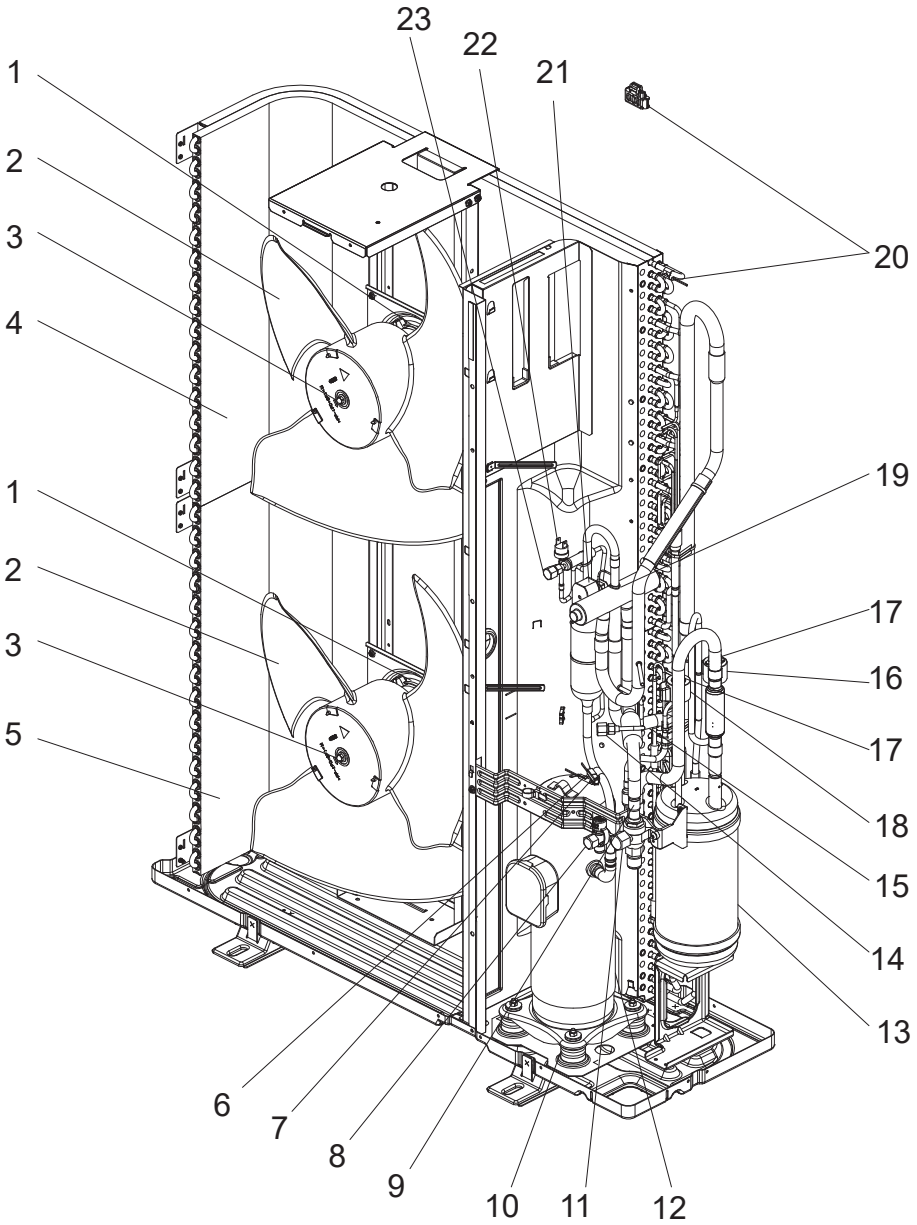

1. The part quantity below indicates the required number of pieces per unit.
2. The circled No. indicates that the part is not shown in the figure.

No.	Parts No.	Parts Name	PUZ-ZM125VKA2.UK	PUZ-ZM125VKA2-ET.UK	PUZ-ZM125VKA2-ER.UK	PUZ-ZM140VKA2.UK	PUZ-ZM140VKA2-ET.UK	PUZ-ZM140VKA2-ER.UK	Wiring Diagram Symbol	Remarks
1	S70 E95 763	FAN MOTOR	2	2	2	2	2	2	MF1, 2	
2	S70 E50 115	PROPELLER FAN	2	2	2	2	2	2		
3	S70 K01 097	NUT	2	2	2	2	2	2		
4	S70 E30 408	HEAT EXCHANGER (TOP)	1	1	1	1	1	1		
5	S70 E35 408H	HEAT EXCHANGER (UNDER)	1	1	1	1	1	1		
6	S70 E57 202	THERMISTOR	1	1	1	1	1	1	TH4 (Discharge)	
7	S70 E71 202	THERMISTOR	1	1	1	1	1	1	TH33 (Comp. Surface)	
8	S70 600 418	STOP VALVE (LIQUID)	1	1	1	1	1	1		3/8"
9	S70 36L 450	STRAINER	1	1	1	1	1	1		50#
10	S70 E02 004	RUBBER MOUNT	4	4	4	4	4	4		
11	S70 E06 411	BALL VALVE (GAS)	1	1	1	1	1	1		5/8"
12	S70 E62 400	COMPRESSOR	1	1	1	1	1	1	MC	DVB36FCHMT
13	S70 E17 440	POWER RECEIVER (ACCUMULATOR)	1	1	1	1	1	1		
14	S70 E02 413	CHARGE PLUG	1	1	1	1	1	1		
15	S70 E58 202	THERMISTOR	1	1	1	1	1	1	TH3 (Liquid)	
16	S70 E50 402	LINEAR EXPANSION COIL	1	1	1	1	1	1		UKV-A295
17	S70 E71 401	EXPANSION VALVE	2	2	2	2	2	2		UKV-25D328
18	S70 E60 402	LINEAR EXPANSION COIL	1	1	1	1	1	1		UKV-A296
19	S70 E14 403	REVERSING VALVE	1	1	1	1	1	1		
20	S70 E85 202	THERMISTOR-W	1	1	1	1	1	1	TH6 (Ambient) TH7 (2-phase pipe)	850/1050
21	S70 E35 242	SOLENOID COIL	1	1	1	1	1	1	21S4	
22	S70 E10 208H	HIGH PRESSURE SWITCH	1	1	1	1	1	1	63H	OFF 4.14 MPA
23	S70 E03 413	CHARGE PLUG	1	1	1	1	1	1		
24	S70 E11 716	TERMINAL BLOCK	1	1	1	1	1	1	TB1	6P (LINE + S1,S2,S3)
25	S70 K95 259	REACTOR	1	1	1	1	1	1	DCL	0.5 MH
26	S70 E64 315	CONTROLLER BOARD	1	1	1	1	1	1	C.B.	
27	S70 E71 313	POWER BOARD	1	1	1	1	1	1	P.B.	

FUNCTIONAL AND ELECTRICAL PARTS

PUZ-ZM100YKA2.UK
PUZ-ZM100YKA2-ET.UK
PUZ-ZM100YKA2-ER.UK
PUZ-ZM125YKA2.UK
PUZ-ZM125YKA2-ET.UK
PUZ-ZM125YKA2-ER.UK
PUZ-ZM140YKA2.UK
PUZ-ZM140YKA2-ET.UK
PUZ-ZM140YKA2-ER.UK

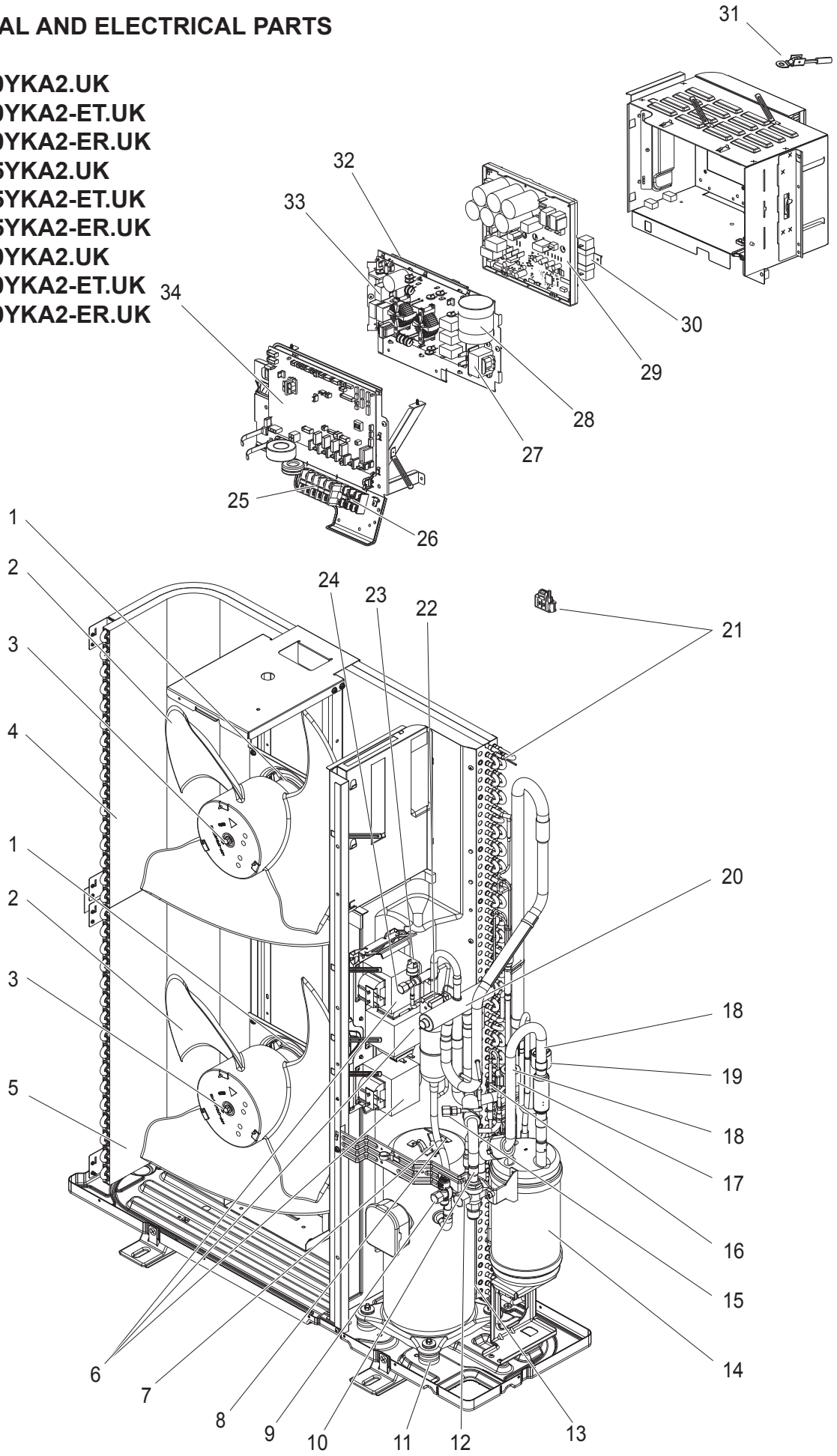

1. The part quantity below indicates the required number of pieces per unit.
2. The circled No. indicates that the part is not shown in the figure.

No.	Parts No.	Parts Name	PUZ-ZM100YKA2.UK	PUZ-ZM100YKA2-ET.UK	PUZ-ZM100YKA2-ER.UK	PUZ-ZM125YKA2.UK	PUZ-ZM125YKA2-ET.UK	PUZ-ZM125YKA2-ER.UK	PUZ-ZM140YKA2.UK	PUZ-ZM140YKA2-ET.UK	PUZ-ZM140YKA2-ER.UK	Wiring Diagram Symbol	Remarks
1	S70 E95 763	FAN MOTOR	2	2	2	2	2	2	2	2	2	MF1, 2	
2	S70 E50 115	PROPELLER FAN	2	2	2	2	2	2	2	2	2		
3	S70 K01 097	NUT	2	2	2	2	2	2	2	2	2		
4	S70 E30 408	HEAT EXCHANGER (TOP)	1	1	1	1	1	1	1	1	1		
5	S70 E35 408H	HEAT EXCHANGER (UNDER)	1	1	1	1	1	1	1	1	1		
6	S70 K96 259	REACTOR				3	3	3				ACL1, 2, 3	
6	S70 K80 259	REACTOR							3	3	3	ACL1, 2, 3	
7	S70 E59 202	THERMISTOR	1	1	1	1	1	1	1	1	1	TH4 (Discharge)	
8	S70 E72 202	THERMISTOR	1	1	1	1	1	1	1	1	1	TH33 (Comp. Surface)	
9	S70 600 418	STOP VALVE (LIQUID)	1	1	1	1	1	1	1	1	1		3/8"
10	S70 36L 450	STRAINER	1	1	1	1	1	1	1	1	1		50#
11	S70 E02 004	RUBBER MOUNT	4	4	4	4	4	4	4	4	4		
12	S70 E06 411	BALL VALVE (GAS)	1	1	1	1	1	1	1	1	1		5/8"
13	S70 E63 400	COMPRESSOR	1	1	1							MC	DVB28FCJMT
13	S70 E64 400	COMPRESSOR				1	1	1	1	1	1	MC	DVB36FCKMT
14	S70 E17 440	POWER RECEIVER (ACCUMULATOR)	1	1	1	1	1	1	1	1	1		
15	S70 E02 413	CHARGE PLUG	1	1	1	1	1	1	1	1	1		
16	S70 E37 202	THERMISTOR-H	1	1	1	1	1	1	1	1	1	TH3 (Liquid)	1150/XAP
17	S70 E60 402	LINEAR EXPANSION COIL	1	1	1	1	1	1	1	1	1		UKV-A296
18	S70 E71 401	EXPANSION VALVE	2	2	2	2	2	2	2	2	2		UKV-25D328
19	S70 E50 402	LINEAR EXPANSION COIL	1	1	1	1	1	1	1	1	1		UKV-A295
20	S70 E14 403	REVERSING VALVE	1	1	1	1	1	1	1	1	1		
21	S70 E60 202	THERMISTOR-W	1	1	1	1	1	1	1	1	1	TH6 (Ambient) TH7 (2-phase pipe)	
22	S70 E35 242	SOLENOID COIL	1	1	1	1	1	1	1	1	1	21S4	
23	S70 E10 208H	HIGH PRESSURE SWITCH	1	1	1	1	1	1	1	1	1	63H	OFF 4.1 4 MPA
24	S70 E03 413	CHARGE PLUG	1	1	1	1	1	1	1	1	1		
25	S70 E09 716	TERMINAL BLOCK	1	1	1	1	1	1	1	1	1	TB1	5P (L1, L2, L3, N,E)
26	S70 E08 716	TERMINAL BLOCK	1	1	1	1	1	1	1	1	1	TB2	3P (S1,S2,S3)
27	S70 K25 259	REACTOR	1	1	1	1	1	1	1	1	1	ACL4	
28	S70 E71 255	CAPACITOR	1	1	1	1	1	1	1	1	1	CK	
29	S70 E72 313	POWER BOARD	1	1	1							P.B.	
29	S70 E73 313	POWER BOARD				1	1	1	1	1	1	P.B.	
30	S70 E20 234	RESISTOR	1	1	1	1	1	1	1	1	1	RS	
31	S70 E55 202	THERMISTOR	1	1	1	1	1	1	1	1	1	TH8 (Heat sink)	
32	S70 E75 313	CONVERTER BOARD	1	1	1	1	1	1	1	1	1	CONV.B.	
33	S70 E54 346	NOISE FILTER	1	1	1	1	1	1	1	1	1	N.F.	
34	S70 E64 315	CONTROLLER BOARD	1	1	1	1	1	1	1	1	1	C.B.	

FUNCTIONAL AND ELECTRICAL PARTS

PUZ-ZM200YKA2.UK **PUZ-ZM250YKA2.UK**

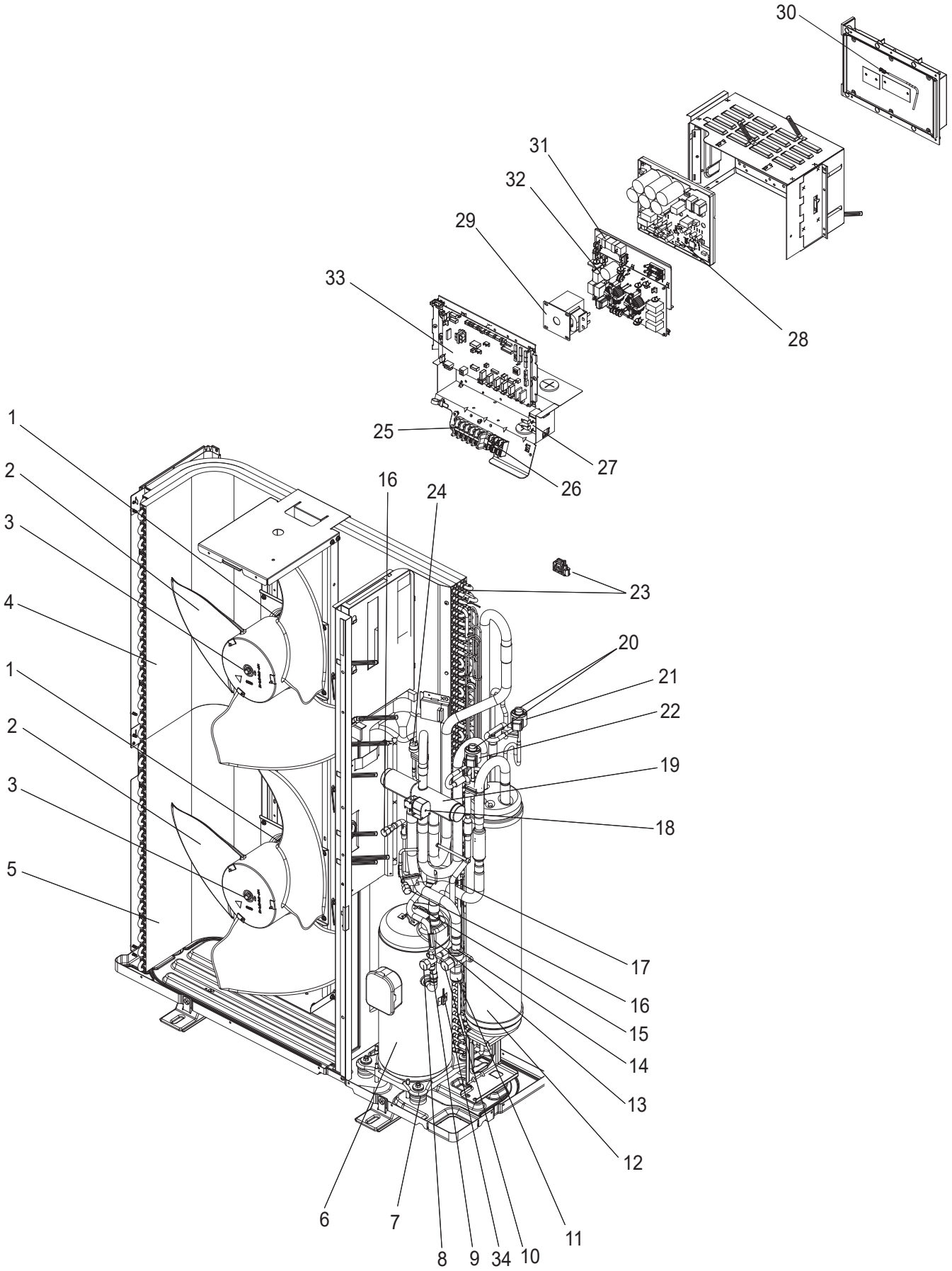

1. The part quantity below indicates the required number of pieces per unit.
2. The circled No. indicates that the part is not shown in the figure.

No.	Parts No.	Parts Name	PUZ-ZM200YKA.UK	PUZ-ZM250YKA.UK	Wiring Diagram Symbol	Remarks
1	S70 E96 763	FAN MOTOR	2	2	MF1, 2	
2	S70 E50 115	PROPELLER FAN	2	2		
3	S70 K01 097	NUT	2	2		
4	S70 E36 408	HEAT EXCHANGER (TOP)	1	1		
5	S70 E37 408H	HEAT EXCHANGER (UNDER)	1	1		
6	S70 E45 400	COMPRESSOR	1	1	MC	AVB52FBAMT
7	S70 E02 004	RUBBER MOUNT	4	4		
8	S70 600 418	STOP VALVE (LIQUID)	1			3/8"
8	S70 700 418	STOP VALVE (LIQUID)		1		1/2"
9	S70 E17 097	FLARE NUT	1			3/8"
9	S70 0B1 097	FLARE NUT		1		1/2"
10	S70 E08 411	BALL VALVE (GAS)	1	1		3/4"
11	S70 E16 097	FLARE NUT GAS	1	1		3/4"
12	S70 E25 440	POWER RECEIVER (ACCUMULATOR)	1	1		
13	S70 E57 202	THERMISTOR	1	1	TH4 (Discharge)	1180
14	S70 42L 450	STRAINER	1	1		50#
15	S70 E82 202	THERMISTOR	1	1	TH33 (Comp. Surface)	
16	S70 E02 413	CHARGE PLUG	2	2		
17	S70 E58 202	THERMISTOR	1	1	TH3 (Liquid)	1150/XAP
18	S70 E26 242	SOLENOID COIL	1	1	21S4	
19	S70 E06 403	REVERSING VALVE	1	1		
20	S70 E97 401	EXPANSION VALVE	2	2		UKV-40D352
21	S70 E30 402	LINEAR EXPANSION VALVE COIL	1	1		UKV-A277
22	S70 E40 402	LINEAR EXPANSION VALVE COIL	1	1		UKV-A358
23	S70 E31 202	THERMISTOR-W	1	1	TH6 (Ambient) TH7 (2-phase pipe)	850/105
24	S70 E10 208H	HIGH PRESSURE SWITCH	1	1	63H	OFF 4.14 MPa
25	S70 E09 716	TERMINAL BED	1	1	TB1	5P(L1,L2,L3 N,E)
26	S70 E08 716	TERMINAL BED	1	1	TB2	3P(S1,S2,S3)
27	S70 K65 259	REACTOR	1	1	ACL4	
28	S70 M20 313	POWER BOARD	1	1	P.B.	
29	S70 K55 259	REACTOR	1	1	DCL	
30	S70 E55 202	THERMISTOR	1	1	TH8 (Heat sink)	
31	S70 E20 234	RESISTOR	1	1	RS	
32	S70 M10 346	NOISE FILTER	1	1	N.F.	
33	S70 M35 315	CONTROLLER BOARD	1	1	C.B.	
34	S70 E05 706	THERMAL PROTECTOR ASSY	1	1		

STRUCTURAL PARTS

PUZ-ZM60VHA2.UK
PUZ-ZM60VHA2-ET.UK
PUZ-ZM60VHA2-ER.UK

PUZ-ZM71VHA2.UK
PUZ-ZM71VHA2-ET.UK
PUZ-ZM71VHA2-ER.UK

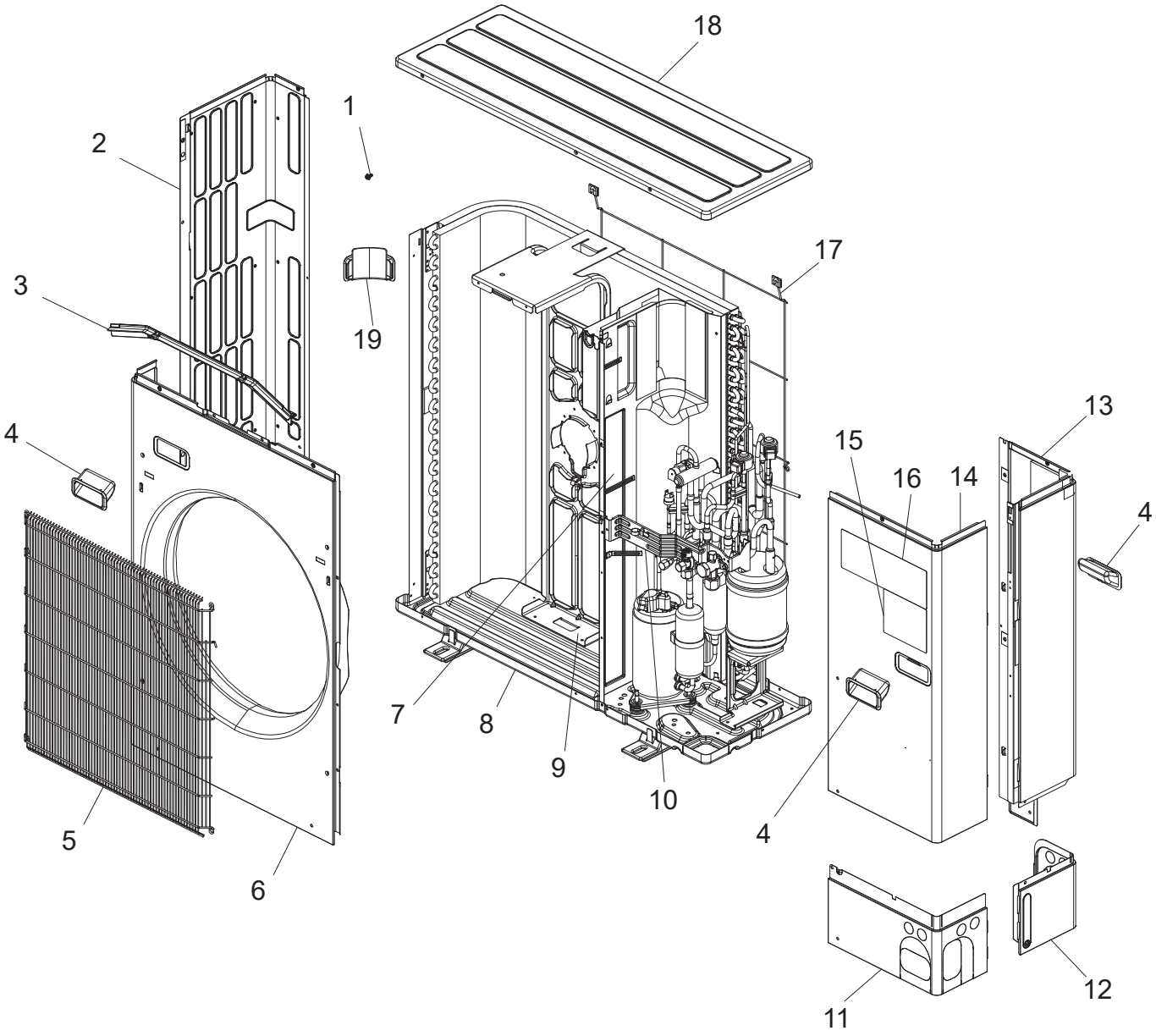

1. The part quantity below indicates the required number of pieces per unit.
2. The circled No. indicates that the part is not shown in the figure.

No.	Parts No.	Parts Name	PUZ-ZM60VHA2.UK	PUZ-ZM60VHA2-ET.UK	PUZ-ZM60VHA2-ER.UK	PUZ-ZM71VHA2.UK	PUZ-ZM71VHA2-ET.UK	PUZ-ZM71VHA2-ER.UK	Remarks [Drawing No.]
1	—	F.ST SCREW	32	32	32	32	32	32	(5×12), [DG12F536H12]
2	S70 E13 662	SIDE PANEL (L)	1	1	1	1	1	1	
3	S70 E20 631	ICE GUARD	1	1		1	1		
4	S70 30L 655	HANDLE	3	3	3	3	3	3	
5	S70 E06 675	WIRE GRILLE	1	1	1	1	1	1	
6	S70 E75 668	FRONT PANEL	1	1	1	1	1	1	
7	—	SEPARATOR	1	1	1	1	1	1	[BK00C456G44]
8	S70 E13 686	BASE ASSY	1	1	1	1	1	1	
9	S70 E15 130	MOTOR SUPPORT	1	1	1	1	1	1	
10	—	VALVE BED ASSY	1	1	1	1	1	1	[BK00C493G02]
11	S70 E35 658	COVER PANEL (FRONT)	1	1	1	1	1	1	
12	S70 E40 658	COVER PANEL (REAR)	1	1	1	1	1	1	
13	S70 E79 662	SIDE PANEL (R)	1	1	1	1	1	1	
14	S70 E77 661	SERVICE PANEL	1	1	1	1	1	1	
15	S70 E90 699	LABEL (POWER INV)	1	1	1	1	1	1	
16	S70 E94 699	LABEL (TM MITSUBISHI)	1	1	1	1	1	1	
17	S70 E10 698	REAR GUARD	1	1	1	1	1	1	
18	S70 E20 641	TOP PANEL	1	1	1	1	1	1	
19	S70 E10 655	HANDLE	1	1	1	1	1	1	

STRUCTURAL PARTS

PUZ-ZM100VKA2.UK	**PUZ-ZM100YKA2.UK**
PUZ-ZM100VKA2-ET.UK	**PUZ-ZM100YKA2-ET.UK**
PUZ-ZM100VKA2-ER.UK	**PUZ-ZM100YKA2-ER.UK**
PUZ-ZM125VKA2.UK	**PUZ-ZM125YKA2.UK**
PUZ-ZM125VKA2-ET.UK	**PUZ-ZM125YKA2-ET.UK**
PUZ-ZM125VKA2-ER.UK	**PUZ-ZM125YKA2-ER.UK**
PUZ-ZM140VKA2.UK	**PUZ-ZM140YKA2.UK**
PUZ-ZM140VKA2-ET.UK	**PUZ-ZM140YKA2-ET.UK**
PUZ-ZM140VKA2-ER.UK	**PUZ-ZM140YKA2-ER.UK**

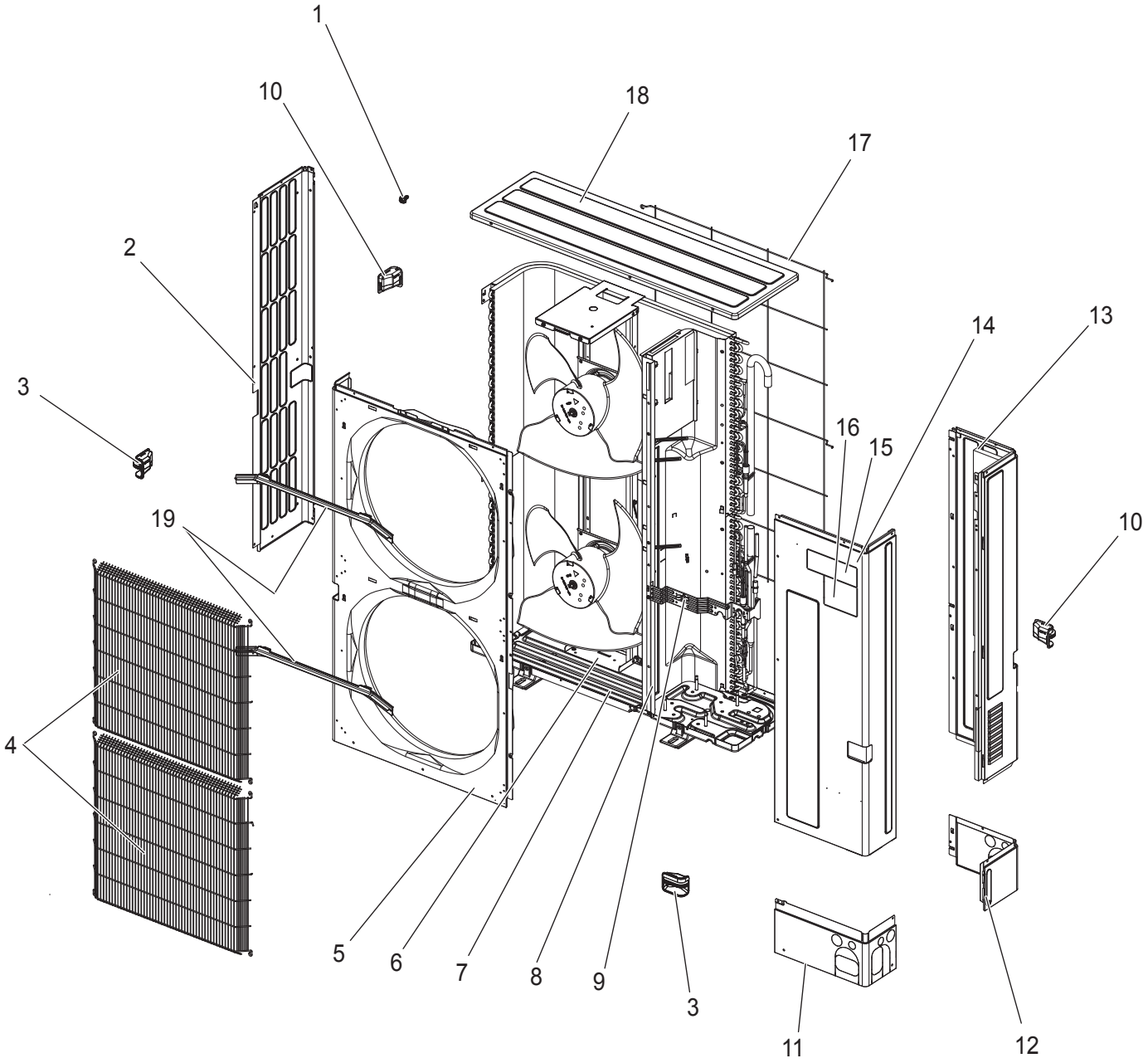

1. The part quantity below indicates the required number of pieces per unit.
2. The circled No. indicates that the part is not shown in the figure.

No.	Parts No.	Parts Name	PUZ-ZM100VKA2.UK	PUZ-ZM100VKA2-ET.UK	PUZ-ZM100VKA2-ER.UK	PUZ-ZM125VKA2.UK	PUZ-ZM125VKA2-ET.UK	PUZ-ZM125VKA2-ER.UK	PUZ-ZM140VKA2.UK	PUZ-ZM140VKA2-ET.UK	PUZ-ZM140VKA2-ER.UK	PUZ-ZM100YKA2.UK	PUZ-ZM100YKA2-ET.UK	PUZ-ZM100YKA2-ER.UK	PUZ-ZM125YKA2.UK	PUZ-ZM125YKA2-ET.UK	PUZ-ZM125YKA2-ER.UK	PUZ-ZM140YKA2.UK	PUZ-ZM140YKA2-ET.UK	PUZ-ZM140YKA2-ER.UK	Remarks [Drawing No.]
1	—	F.ST SCREW	60	60	60	60	60	60	60	60	60	60	60	60	60	60	60	60	60	60	[DG12F536H12] (5×12)
2	S70 E17 662	SIDE PANEL (L)	1	1	1	1	1	1	1	1	1	1	1	1	1	1	1	1	1	1	
3	S70 E20 655	HANDLE (FRONT)	2	2	2	2	2	2	2	2	2	2	2	2	2	2	2	2	2	2	
4	S70 E40 675	FAN GRILLE	2	2	2	2	2	2	2	2	2	2	2	2	2	2	2	2	2	2	
5	S70 E61 668	FRONT PANEL	1	1	1	1	1	1	1	1	1	1	1	1	1	1	1	1	1	1	
6	S70 E90 130	MOTOR SUPPORT	1	1	1	1	1	1	1	1	1	1	1	1	1	1	1	1	1	1	
7	S70 E19 686	BASE ASSY	1	1	1	1	1	1	1	1	1	1	1	1	1	1	1	1	1	1	
8	—	SEPARATOR	1	1	1	1	1	1	1	1	1										[RK00N735G01]
8	—	SEPARATOR										1	1	1	1	1	1	1	1	1	[BK00N021G07]
9	—	VALVE BED ASSY	1	1	1	1	1	1	1	1	1	1	1	1	1	1	1	1	1	1	[BK00R803G04]
10	S70 E30 655	HANDLE (REAR)	2	2	2	2	2	2	2	2	2	2	2	2	2	2	2	2	2	2	
11	S70 E55 658	COVER PANEL (FRONT)	1	1	1	1	1	1	1	1	1	1	1	1	1	1	1	1	1	1	
12	S70 E65 658	COVER PANEL (REAR)	1	1	1	1	1	1	1	1	1	1	1	1	1	1	1	1	1	1	
13	S70 E82 662	SIDE PANEL (R)	1	1	1	1	1	1	1	1	1	1	1	1	1	1	1	1	1	1	
14	S70 E47 661	SERVICE PANEL	1	1	1	1	1	1	1	1	1	1	1	1	1	1	1	1	1	1	
15	S70 E90 699	LABEL (BRAND POWER INV)	1	1	1	1	1	1	1	1	1	1	1	1	1	1	1	1	1	1	
16	S70 E94 699	LABEL (TRADE MARK)	1	1	1	1	1	1	1	1	1	1	1	1	1	1	1	1	1	1	
17	S70 E30 698	REAR GUARD	1	1	1	1	1	1	1	1	1	1	1	1	1	1	1	1	1	1	
18	S70 E60 641	TOP PANEL	1	1	1	1	1	1	1	1	1	1	1	1	1	1	1	1	1	1	
19	S70 E10 631	ICE GUARD	2	2	2	2	2	2	2	2	2	2	2	2	2	2	2	2	2	2	

STRUCTURAL PARTS

PUZ-ZM200YKA2.UK **PUZ-ZM250YKA2.UK**

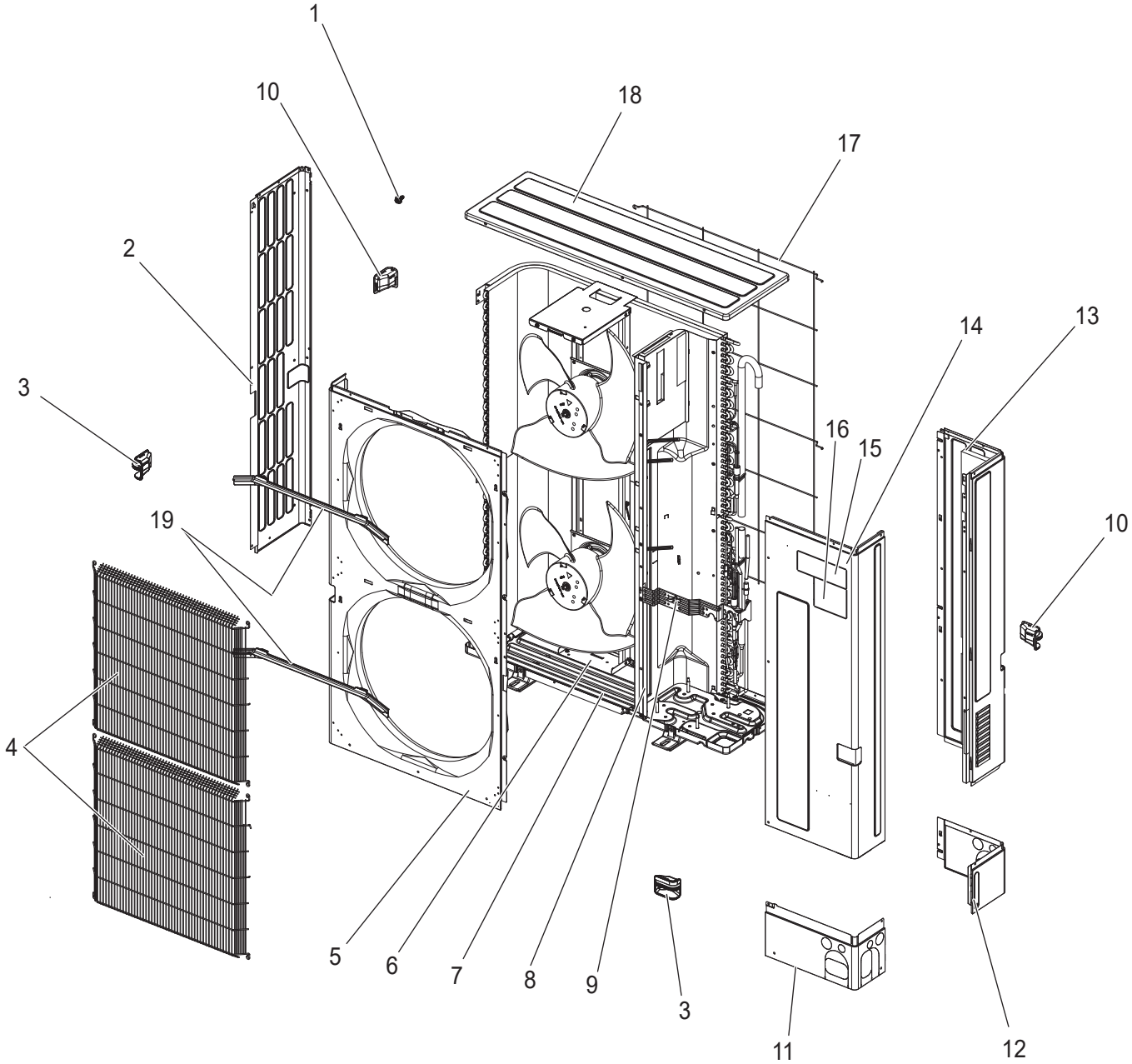

1. The part quantity below indicates the required number of pieces per unit.
2. The circled No. indicates that the part is not shown in the figure.

No.	Parts No.	Parts Name	PUZ-ZM200YKA.UK	PUZ-ZM250YKA.UK	Remarks [Drawing No.]
1	—	F.ST SCREW	64	64	(5×12), [DG12F536H12]
2	S 7 0 E 1 7 6 6 2	SIDE PANEL (L)	1	1	
3	S 7 0 E 2 0 6 5 5	HANDLE (FRONT)	2	2	
4	S 7 0 E 4 0 6 7 5	FAN GRILLE	2	2	
5	S 7 0 E 6 1 6 6 8	FRONT PANEL	1	1	
6	S 7 0 E 9 5 1 3 0	MOTOR SUPPORT	1	1	
7	S 7 0 E 9 1 6 8 6	BASE ASSY	1	1	
8	—	SEPARATOR	1	1	[BK00N021G60]
9	—	VALVE BED ASSY	1	1	[GK00C012G01]
10	S 7 0 E 3 0 6 5 5	HANDLE (REAR)	2	2	
11	S 7 0 E 5 5 6 5 8	COVER PANEL (FRONT)	1	1	
12	S 7 0 E 6 5 6 5 8	COVER PANEL (REAR)	1	1	
13	S 7 0 E 1 8 6 6 2	SIDE PANEL (R)	1	1	
14	S 7 0 E 4 7 6 6 1	SERVICE PANEL	1	1	
15	S 7 0 E 9 4 6 9 9	LABEL (T MARK MITSUBISHI)	1	1	
16	S 7 0 E 9 0 6 9 9	LABEL (T MARK SLIM_R32 & INV)	1	1	
17	S 7 0 E 3 0 6 9 8	REAR GUARD	1	1	
18	S 7 0 E 4 0 6 4 1	TOP PANEL	1	1	
19	S 7 0 E 1 0 6 3 1	ICE GUARD	2	2	

Mr.SLIM

MITSUBISHI ELECTRIC CORPORATION

HEAD OFFICE: TOKYO BUILDING, 2-7-3, MARUNOUCHI, CHIYODA-KU, TOKYO 100-8310, JAPAN

©Copyright 2021 MITSUBISHI ELECTRIC CORPORATION
Issued: Oct. 2021 No.OCB771 REVISED EDITION-A
Published: Sep. 2021 No.OCB771
Made in Japan

Specifications are subject to change without notice.