MITSUBISHI ELECTRIC

SPLIT-TYPE, HEAT PUMP AIR CONDITIONERS

March 2019

No. OCB527
REVISED EDITION-D

PARTS CATALOG R410A

Outdoor unit
[Model Name]

PUHZ-ZRP35VKA
PUHZ-ZRP50VKA
PUHZ-ZRP60VHA
PUHZ-ZRP71VHA
PUHZ-ZRP100VKA
PUHZ-ZRP125VKA
PUHZ-ZRP140VKA
PUHZ-ZRP100YKA
PUHZ-ZRP125YKA
PUHZ-ZRP140YKA

[Service Ref.]
Refer to page 2.

Revision:
• Some descriptions have been modified in REVISED EDITION-D.

OCB527 REVISED EDITION-C is void.

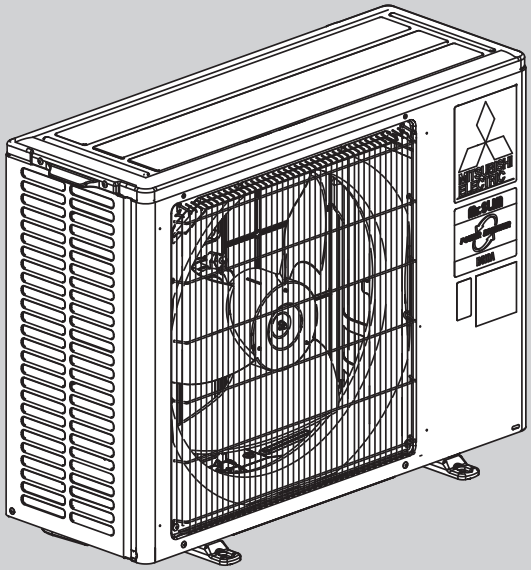

PUHZ-ZRP35VKA
PUHZ-ZRP50VKA

CONTENTS

1. SERVICE PARTS LIST ····· 4

SERVICE MANUAL (OCH527)

Mr.SLIM

[Service Ref.]

PUHZ-ZRP35VKA
PUHZ-ZRP35VKAR1
PUHZ-ZRP35VKAR1-ER
PUHZ-ZRP35VKAR1-ET
PUHZ-ZRP50VKA
PUHZ-ZRP50VKAR1
PUHZ-ZRP50VKAR1-ER
PUHZ-ZRP50VKAR1-ET
PUHZ-ZRP60VHA
PUHZ-ZRP60VHAR1
PUHZ-ZRP60VHAR1-ER
PUHZ-ZRP60VHAR1-ET
PUHZ-ZRP71VHA
PUHZ-ZRP71VHAR1
PUHZ-ZRP71VHAR1-ER
PUHZ-ZRP71VHAR1-ET
PUHZ-ZRP100VKA
PUHZ-ZRP125VKA
PUHZ-ZRP140VKA
PUHZ-ZRP100YKA
PUHZ-ZRP100YKAR1
PUHZ-ZRP125YKA
PUHZ-ZRP125YKAR1
PUHZ-ZRP140YKA
PUHZ-ZRP140YKAR1

This page is intentionally left blank.

1 SERVICE PARTS LIST

FUNCTIONAL AND ELECTRICAL PARTS

PUHZ-ZRP35VKA	**PUHZ-ZRP50VKA**
PUHZ-ZRP35VKAR1	**PUHZ-ZRP50VKAR1**
PUHZ-ZRP35VKAR1-ER	**PUHZ-ZRP50VKAR1-ER**
PUHZ-ZRP35VKAR1-ET	**PUHZ-ZRP50VKAR1-ET**

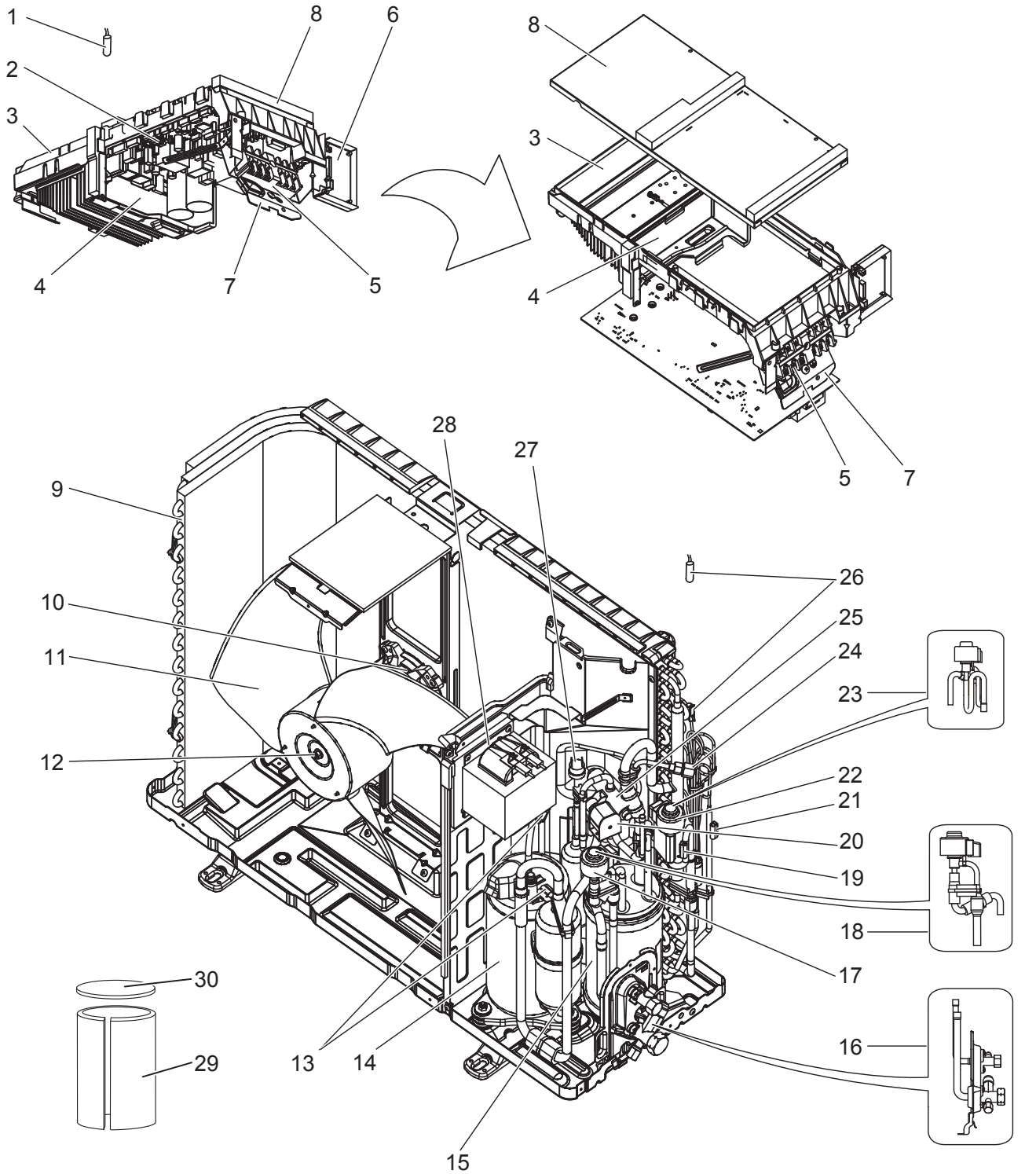

Parts numbers that are circled are not shown in the figure.

No.	Parts No.	Parts Name	Specification	Q'ty/unit								Remarks (Drawing No.)	Wiring Diagram Symbol
				PUHZ-ZRP35VKA	PUHZ-ZRP50VKA	PUHZ-ZRP35VKAR1	PUHZ-ZRP50VKAR1	PUHZ-ZRP35VKAR1-ER	PUHZ-ZRP50VKAR1-ER	PUHZ-ZRP35VKAR1-ET	PUHZ-ZRP50VKAR1-ET		
1	R01 H81 202	THERMISTOR (HS)	HEAT SINK	1	1	1	1	1	1	1	1		TH8
2	T7W GE0 315	CONTROLLER BOARD		1	1	1	1	1	1	1	1		C.B.
3	R01 E00 327	P.B. SUPPORT		1	1	1	1	1	1	1	1		
4	R01 E01 327	H.S. SUPPORT		1	1	1	1	1	1	1	1		
5	T7W E62 716	T.B./LNE.S1.S2.S3	6P (L,N,⏚,S1,S2,S3)	1	1	1	1	1	1	1	1		TB1
6	R01 E00 316	SWITCH BOARD		1	1	1	1	1	1	1	1		S.B.
7	—	T.B. SUPPORT		1	1	1	1	1	1	1	1	(BK00L098G07)	
8	R01 E00 325	P.B. COVER		1	1	1	1	1	1	1	1		
9	T7W E71 408	HEAT EXCHANGER		1		1		1		1			
	R01 H50 408	HEAT EXCHANGER			1		1		1		1		
10	R01 E55 221	FAN MOTOR		1	1	1	1	1	1	1	1		MF1
11	R01 E11 115	PROPELLER FAN		1	1	1	1	1	1	1	1		
12	R01 E08 097	NUT M6-L		1	1	1	1	1	1	1	1		
13	R01 H94 202	THERMISTOR DS	Discharge, Comp. surface	1	1	1	1	1	1	1	1		TH4,TH32
14	T92 263 124	COMPRESSOR	SNB092FGCM	1		1		1		1		Includes RUBBER MOUNT	MC
	T97 418 607	COMPRESSOR	SNB130FGCM2		1		1		1		1	Includes RUBBER MOUNT	MC
15	R01 E69 440	POWER RECEIVER		1	1	1	1	1	1	1	1		
16	R01 E34 410	STOP VALVE ASSY		1	1	1	1	1	1	1	1		
17	R01 E99 242	COIL (LEV)/XAP-6P RED	CAM type	1	1	1	1	1	1	1	1		LEV-B
18	R01 H30 401	LEV ASSY-B/REC-V		1	1	1	1	1	1	1	1	Includes coil for LEV-B	
19	T7W E51 202	THERMISTOR	Outdoor Pipe	1	1	1	1	1	1	1	1		TH33
20	T7W E62 242	SOLENOID COIL (21S4)		1	1	1	1	1	1	1	1		21S4
21	R01 N25 202	THERMISTOR	Outdoor Pipe	1	1	1	1	1	1	1	1		TH3
22	R01 E98 242	COIL (LEV)/XAP-6P WH	CAM type	1	1	1	1	1	1	1	1		LEV-A
23	T7W E28 401	LEV ASSY-A/C-REC		1	1	1	1	1	1	1	1	Includes coil for LEV-A	
24	R01 E24 413	CHARGE PLUG /LB90		1	1	1	1	1	1	1	1		
25	R01 E29 403	4WAY VALVE		1	1	1	1	1	1	1	1		21S4
26	R01 H83 202	THERMISTOR W	Outdoor 2-Phase Pipe, Outdoor	1	1	1	1	1	1	1	1		TH6,TH7
27	R01 E06 208	HIGH PRESSURE SWITCH		1	1	1	1	1	1	1	1		63H
28	R01 E46 259	REACTOR		1	1	1	1	1	1	1	1		ACL
29	R01 A52 602	COMP FELT (BODY)		1	1	1	1	1	1	1	1		
30	R01 A53 602	COMP FELT (TOP)		1	1	1	1	1	1	1	1		
(31)	R01 E10 239	FUSE 10A 250V	10A 250V	2	2	2	2	2	2	2	2		F1,F2
(32)	R01 E17 239	FUSE 3.15A 250V	3.15A 250V	2	2	2	2	2	2	2	2		F3,F4
(33)	R01 E10 510	LEAD ASSY COMP		1		1		1		1			
	R01 E11 510	LEAD ASSY COMP			1		1		1		1		

FUNCTIONAL AND ELECTRICAL PARTS

PUHZ-ZRP60VHA	**PUHZ-ZRP71VHA**
PUHZ-ZRP60VHAR1	**PUHZ-ZRP71VHAR1**
PUHZ-ZRP60VHAR1-ER	**PUHZ-ZRP71VHAR1-ER**
PUHZ-ZRP60VHAR1-ET	**PUHZ-ZRP71VHAR1-ET**

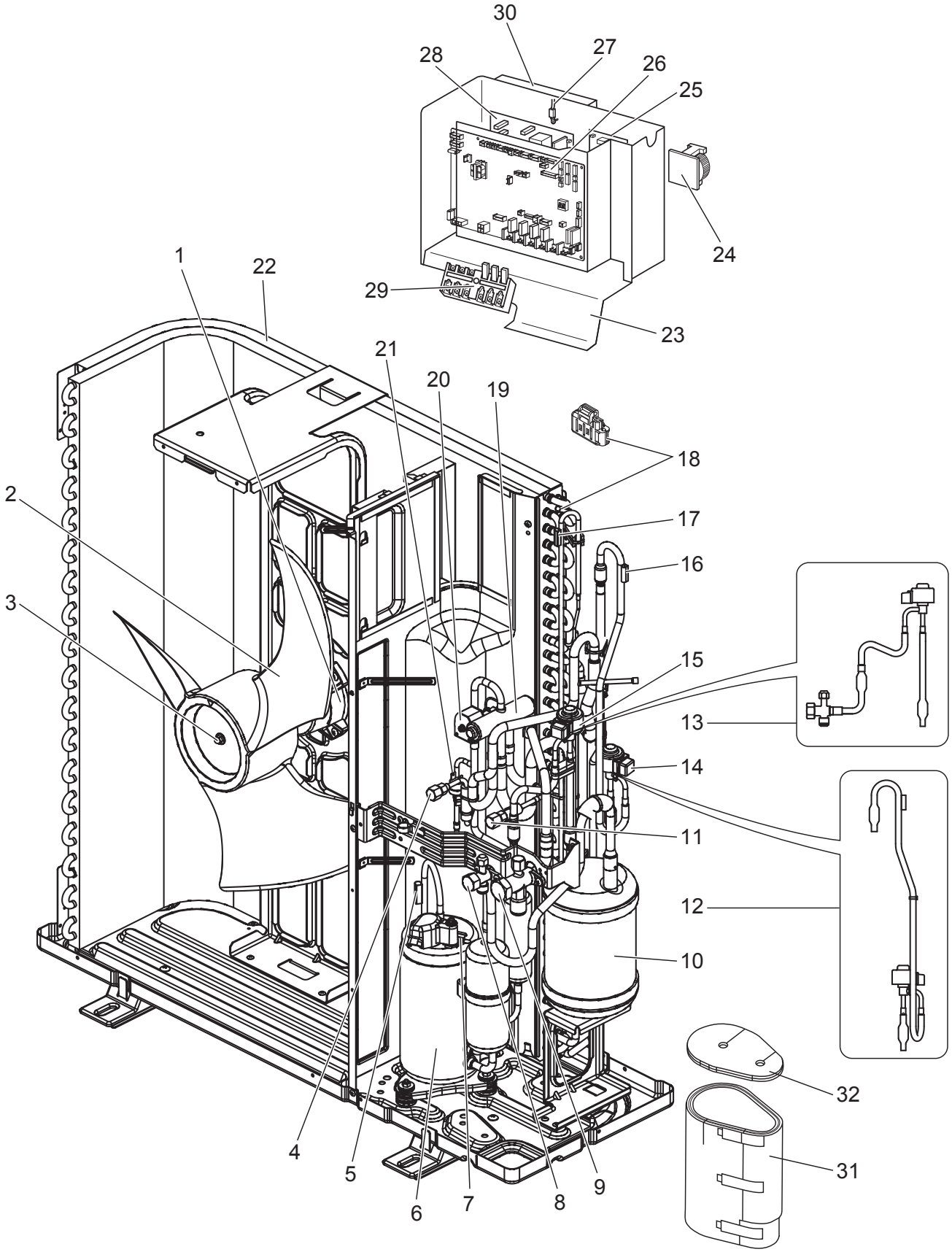

Parts numbers that are circled are not shown in the figure.

No.	Parts No.	Parts Name	Specification	Q'ty/unit								Remarks (Drawing No.)	Wiring Diagram Symbol
				PUHZ-ZRP60VHA	PUHZ-ZRP71VHA	PUHZ-ZRP60VHAR1	PUHZ-ZRP71VHAR1	PUHZ-ZRP60VHAR1-ER	PUHZ-ZRP71VHAR1-ER	PUHZ-ZRP60VHAR1-ET	PUHZ-ZRP71VHAR1-ET		
1	R01 E70 221	FAN MOTOR		1	1	1	1	1	1	1	1		MF1
2	R01 E12 115	PROPELLER FAN		1	1	1	1	1	1	1	1		
3	R01 E09 097	NUT M6		1	1	1	1	1	1	1	1		
4	R01 E24 413	CHARGE PLUG /LB90		1	1	1	1	1	1	1	1		
5	T7W E17 201	THERMISTOR	Discharge	1	1								TH4
	R01 E34 201	THERMISTOR (DIS)	Discharge			1	1	1	1	1	1		TH4
6	T92 263 125	COMPRESSOR	SNB130FGCM1	1		1		1		1		Includes RUBBER MOUNT	MC
	T92 20G 607	COMPRESSOR	SNB172FSHM1		1		1		1		1	Includes RUBBER MOUNT	MC
7	T7W E11 201	SHELL THERMISTOR	Comp. surface	1	1	1	1	1	1	1	1		TH32
8	R01 E25 410	STOP VALVE 3/8F	3/8	1	1	1	1	1	1	1	1		
9	R01 E24 410	STOP VALVE 5/8F	5/8	1	1	1	1	1	1	1	1	Includes STRAINER	
10	R01 H62 440	POWER RECEIVER		1	1	1	1	1	1	1	1		
11	R01 E18 413	CHARGE PLUG /ST		1	1	1	1	1	1	1	1		
12	T7W E29 401	LEV ASSY-A/C-REC		1	1	1	1	1	1	1	1	Includes coil for LEV-A	
13	R01 R40 401	LEV ASSY-B/REC-V		1	1	1	1	1	1	1	1	Includes coil for LEV-B & STV	
14	R01 H03 242	COIL (LEV)/XAP-6P WH	CAM type	1	1	1	1	1	1	1	1		LEV-A
15	R01 H06 242	COIL (LEV)/XAP-6P RED	CAM type	1	1	1	1	1	1	1	1		LEV-B
16	R01 H79 202	THERMISTOR	Outdoor Pipe	1	1	1	1	1	1	1	1		TH33
17	R01 N03 202	THERMISTOR	Outdoor Pipe	1	1	1	1	1	1	1	1		TH3
18	R01 E94 202	THERMISTOR	Outdoor 2-Phase Pipe, Outdoor	1	1	1	1	1	1	1	1		TH6, 7
19	R01 E13 403	4WAY VALVE		1	1	1	1	1	1	1	1		21S4
20	T7W H39 242	SOLENOID COIL (21S4)		1	1	1	1	1	1	1	1		21S4
21	R01 H06 208	HIGH PRESSURE SWITCH		1	1	1	1	1	1	1	1		63H
22	R01 R63 408	HEAT EXCHANGER		1	1	1	1	1	1	1	1		
23	—	ELECTRICAL PARTS BOX		1	1	1	1	1	1	1	1	(BK00B055G98)	
24	R01 E33 259	REACTOR		1	1	1	1	1	1	1	1		ACL
25	T7W E21 346	NOISE FILTER		1	1	1	1	1	1	1	1		N.F.
26	T7W G51 315	CONTROLLER BOARD		1	1	1	1	1	1	1	1		C.B.
27	R01 E99 202	THERMISTOR (HS)	HEAT SINK	1	1	1	1	1	1	1	1		TH8
28	T7W E78 313	POWER BOARD		1		1		1		1			P.B.
	T7W E81 313	POWER BOARD			1		1		1		1		P.B.
29	T7W E61 716	T.B./LNE.S1.S2.S3	6P (L,N,⏚,S1,S2,S3)	1	1	1	1	1	1	1	1		TB1
30	R01 A09 371	HEAT SINK		1	1	1	1	1	1	1	1	Includes SCREWS	
31	T7W A05 602	COMP FELT (BODY)		1	1	1	1	1	1	1	1		
32	R01 A59 602	COMP FELT (TOP)		1	1	1	1	1	1	1	1		
(33)	R01 E14 239	FUSE 6.3A 250V	6.3A 250V	4	4	4	4	4	4	4	4		F1,2,3,4
(34)	R01 E12 510	LEAD ASSY COMP		1	1	1	1	1	1	1	1		

FUNCTIONAL AND ELECTRICAL PARTS
PUHZ-ZRP100VKA
PUHZ-ZRP125VKA

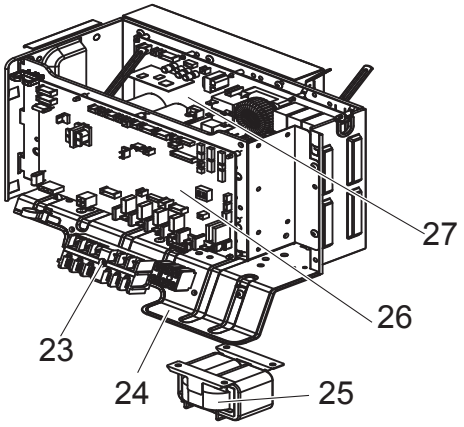

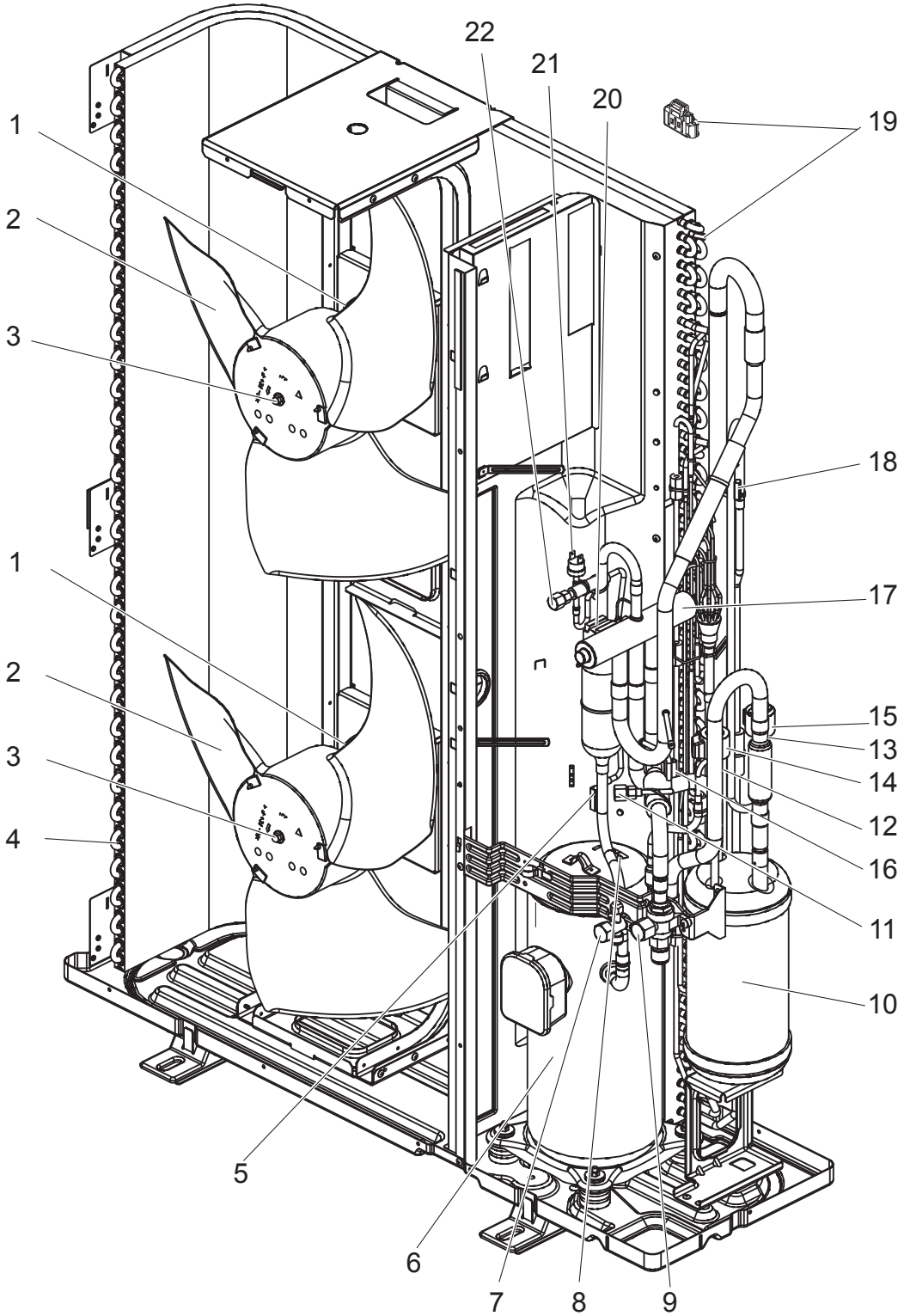

Parts numbers that are circled are not shown in the figures.

No.	Parts No.	Parts Name	Specification	Q'ty/unit		Remarks (Drawing No.)	Wiring Diagram Symbol
				PUHZ-ZRP100VKA	PUHZ-ZRP125VKA		
1	R01 E50 221	FAN MOTOR		2	2		MF1,2
2	R01 E10 115	PROPELLER FAN /D550		2	2		
3	R01 E09 097	NUT M6		2	2		
4	R01 H52 408	HEAT EXCHANGER		1	1		
5	T7W E04 201	THERMISTOR (DIS)	Discharge	1	1		TH4
6	T97 424 077	COMPRESSOR	ANB33FNFMT	1	1	Includes RUBBER MOUNTS	MC
7	R01 E25 410	STOP VALVE 3/8F	3/8	1	1		
8	T7W E11 201	SHELL THERMISTOR	Comp. surface	1	1		TH32
9	R01 E12 410	BALL VALVE 5/8F	5/8	1	1	Includes STRAINER	
10	R01 E60 440	POWER RECEIVER		1	1		
11	R01 E24 413	CHARGE PLUG /LB90		1	1		
12	R01 H41 401	LEV ASSY-B/REC-V		1	1	Includes coil for LEV-B & STV	
13	T7W E30 401	LEV ASSY-A/C-REC		1	1	Includes coil for LEV-A	
14	R01 E88 242	COIL (LEV)/XAP-6P RED		1	1		LEV-B
15	R01 E86 242	COIL (LEV)/XAP-6P WH		1	1		LEV-A
16	R01 H00 202	THERMISTOR	Outdoor Pipe	1	1		TH3
17	R01 E15 403	4WAY VALVE		1	1		21S4
18	R01 H79 202	THERMISTOR	Outdoor Pipe	1	1		TH33
19	R01 E94 202	THERMISTOR	Outdoor 2-Phase Pipe, Outdoor	1	1		TH6,7
20	T7W E41 242	SOLENOID COIL (21S4)		1	1		21S4
21	R01 E06 208	HIGH PRESSURE SWITCH		1	1		63H
22	R01 E18 413	CHARGE PLUG /ST		1	1		
23	T7W E61 716	T.B./LNE.S1.S2.S3	6P (L,N,⏚,S1,S2,S3)	1	1		TB1
24	—	ELECTRICAL PARTS BOX		1	1	(BK00B055GB0)	
25	R01 E51 259	REACTOR		1	1		DCL
26	T7W F27 315	CONTROLLER BOARD		1	1		C.B.
27	T7W A70 323	POWER BOARD		1	1		P.B.
(28)	R01 E14 239	FUSE 6.3A 250V	6.3A 250V	4	4		F1,2,3,4
(29)	R01 E20 254	CAPACITOR		1	1		CB
(30)	R01 E13 510	LEAD ASSY COMP		1	1		

FUNCTIONAL AND ELECTRICAL PARTS
PUHZ-ZRP100YKA
PUHZ-ZRP125YKA
PUHZ-ZRP100YKAR1
PUHZ-ZRP125YKAR1

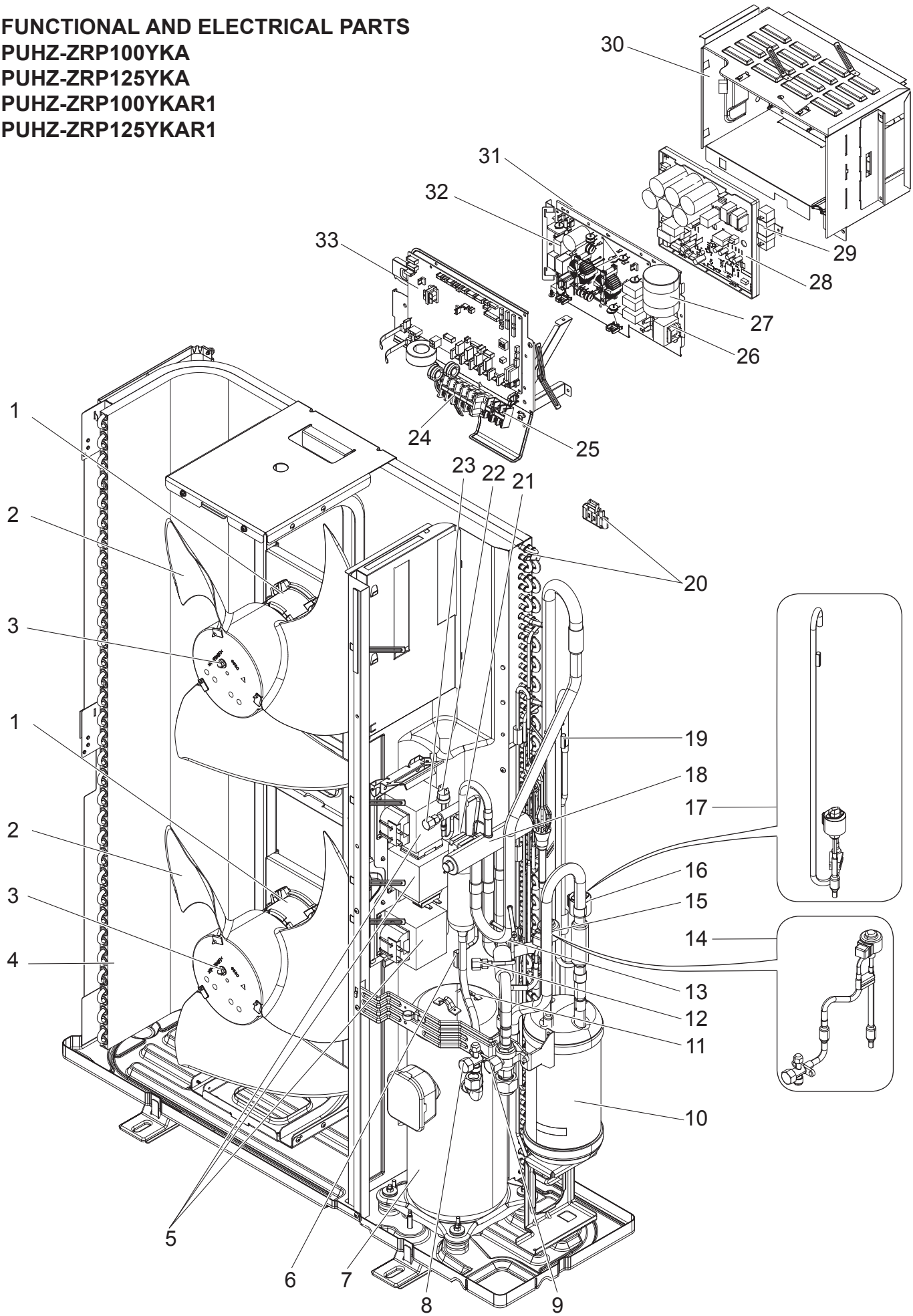

Parts numbers that are circled are not shown in the figures.

No.	Parts No.	Parts Name	Specification	Q'ty/unit				Remarks (Drawing No.)	Wiring Diagram Symbol
				PUHZ-ZRP100YKA	PUHZ-ZRP125YKA	PUHZ-ZRP100YKAR1	PUHZ-ZRP125YKAR1		
1	R01 E50 221	FAN MOTOR		2	2	2	2		MF1,2
2	R01 E10 115	PROPELLER FAN /D550		2	2	2	2		
3	R01 E09 097	NUT M6		2	2	2	2		
4	R01 H52 408	HEAT EXCHANGER		1	1	1	1		
5	T7W E21 259	REACTOR		3		3			ACL1,2,3
	T7W E22 259	REACTOR			3		3		ACL1,2,3
6	T7W E17 201	THERMISTOR	Discharge	1	1	1	1		TH4
7	T97 425 077	COMPRESSOR	ANB33FNCMT	1	1	1	1	Includes RUBBER MOUNTS	MC
8	R01 E25 410	STOP VALVE 3/8F	3/8	1	1	1	1		
9	R01 E12 410	BALL VALVE 5/8F	5/8	1	1	1	1	Includes STRAINER	
10	R01 E60 440	POWER RECEIVER		1	1	1	1		
11	T7W E11 201	SHELL THERMISTOR	Comp. surface	1	1	1	1		TH32
12	R01 E24 413	CHARGE PLUG /LB90		1	1	1	1		
13	R01 H00 202	THERMISTOR	Outdoor Pipe	1	1	1	1		TH3
14	R01 H42 401	LEV ASSY-B/REC-V		1	1	1	1	Includes coil for LEV-B & STV	
15	R01 E49 242	COIL (LEV)/XAP-6P RED		1	1	1	1		LEV-B
16	R01 E50 242	COIL (LEV)/XAP-6P WH		1	1	1	1		LEV-A
17	T7W E31 401	LEV ASSY-A/C-REC		1	1	1	1	Includes coil for LEV-A	
18	R01 E15 403	4WAY VALVE		1	1	1	1		21S4
19	R01 H79 202	THERMISTOR	Outdoor Pipe	1	1	1	1		TH33
20	R01 H01 202	THERMISTOR W	Outdoor 2-Phase Pipe, Outdoor	1	1	1	1		TH6,7
21	T7W E41 242	SOLENOID COIL (21S4)		1	1	1	1		21S4
22	R01 E06 208	HIGH PRESUURE SWITCH		1	1	1	1		63H
23	R01 E18 413	CHARGE PLUG /ST		1	1	1	1		
24	T7W E30 716	T.B./L1.L2.L3.N.E	5P (L1,L2,L3,N,⏚)	1	1	1	1		TB1
25	R01 E19 246	T.B./S1.S2.S3	3P (S1,S2,S3)	1	1	1	1		TB2
26	R01 E31 259	REACTOR		1	1	1	1		ACL4
27	T7W E10 254	CAPACITOR		1	1	1	1		CK
28	T7W A30 323	POWER BOARD		1	1				P.B.
	T7W A40 323	POWER BOARD				1	1		P.B.
29	R01 E10 233	RESISTOR		1	1	1	1		RS
30	—	ELECTRICAL PARTS BOX		1	1	1	1	(BK00C410G17)	
31	T7W E75 310	CONVERTER BOARD		1	1	1	1		CONV.B.
32	T7W E28 346	NOISE FILTER		1	1	1	1		N.F.
33	T7W HP0 315	CONTROLLER BOARD		1	1	1	1		C.B.
(34)	R01 E14 239	FUSE 6.3A 250V	6.3A 250V	4	4	4	4		F1,2,3,4
(35)	R01 H93 202	THERMISTOR (HS)	HEAT SINK	1	1	1	1		TH8
(36)	R01 E14 510	LEAD ASSY COMP		1	1	1	1		

FUNCTIONAL AND ELECTRICAL PARTS
PUHZ-ZRP140VKA

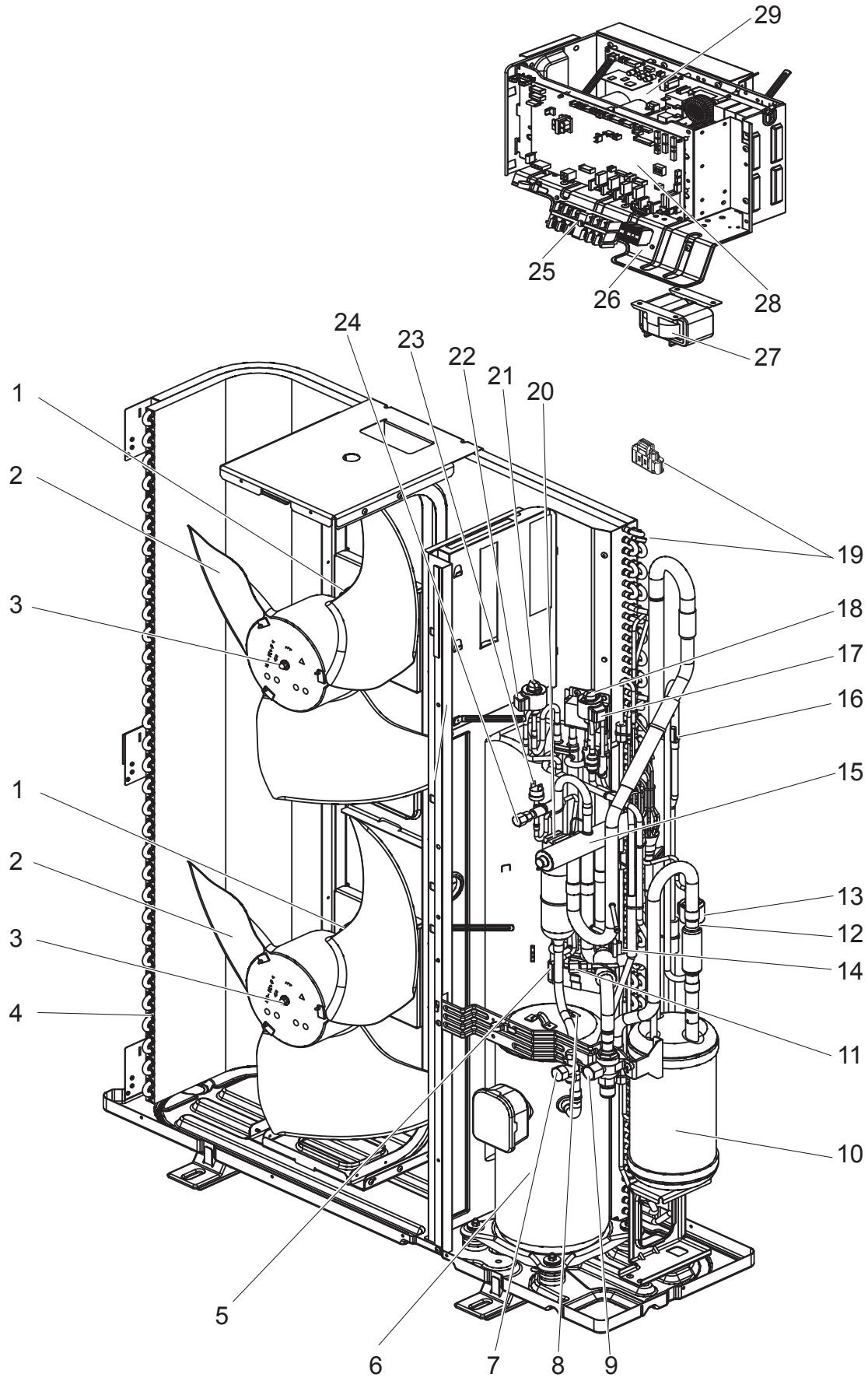

Parts numbers that are circled are not shown in the figures.

No.	Parts No.	Parts Name	Specification	Q'ty/unit	Remarks (Drawing No.)	Wiring Diagram Symbol
				PUHZ-ZRP140VKA		
1	R01 E50 221	FAN MOTOR		2		MF1,2
2	R01 E10 115	PROPELLER FAN /D550		2		
3	R01 E09 097	NUT M6		2		
4	R01 H52 408	HEAT EXCHANGER		1		
5	T7W E04 201	THERMISTOR (DIS)	Discharge	1		TH4
6	T97 424 077	COMPRESSOR	ANB33FNFMT	1	Includes RUBBER MOUNTS	MC
7	R01 E25 410	STOP VALVE 3/8F	3/8	1		
8	T7W E11 201	SHELL THERMISTOR	Comp. surface	1		TH32
9	R01 E12 410	BALL VALVE 5/8F	5/8	1	Includes STRAINER	
10	R01 E60 440	POWER RECEIVER		1		
11	R01 E24 413	CHARGE PLUG /LB90		1		
12	T7W E30 401	LEV ASSY-A/C-REC		1	Includes coil for LEV-A	
13	R01 E86 242	COIL (LEV) /XAP-6P WH		1		LEV-A
14	R01 H00 202	THERMISTOR	Outdoor Pipe	1		TH3
15	R01 E15 403	4WAY VALVE		1		21S4
16	R01 H79 202	THERMISTOR	Outdoor Pipe	1		TH33
17	R01 E49 242	COIL (LEV)/XAP-6P RED		1		LEV-B
18	R01 H20 401	LEV		1	For LEV-B	
19	R01 E94 202	THERMISTOR	Outdoor 2-Phase Pipe, Outdoor	1		TH6,7
20	T7W E41 242	SOLENOID COIL (21S4)		1		21S4
21	R01 H86 401	LEV		1	For LEV-C	
22	R01 E68 242	COIL (LEV)/XAP-6P BLU		1		LEV-C
23	R01 E06 208	HIGH PRESSURE SWITCH		1		63H
24	R01 E18 413	CHARGE PLUG /ST		1		
25	T7W E61 716	T.B./LNE.S1.S2.S3	6P (L,N,⏚,S1,S2,S3)	1		TB1
26	—	ELECTRICAL PARTS BOX		1	(BK00B055GB0)	
27	R01 E51 259	REACTOR		1		DCL
28	T7W F27 315	CONTROLLER BOARD		1		C.B.
29	T7W A70 323	POWER BOARD		1		P.B.
(30)	R01 E14 239	FUSE 6.3A 250V	6.3A 250V	4		F1,2,3,4
(31)	R01 E20 254	CAPACITOR		1		CB
(32)	R01 E13 510	LEAD ASSY COMP		1		

FUNCTIONAL AND ELECTRICAL PARTS
PUHZ-ZRP140YKA
PUHZ-ZRP140YKAR1

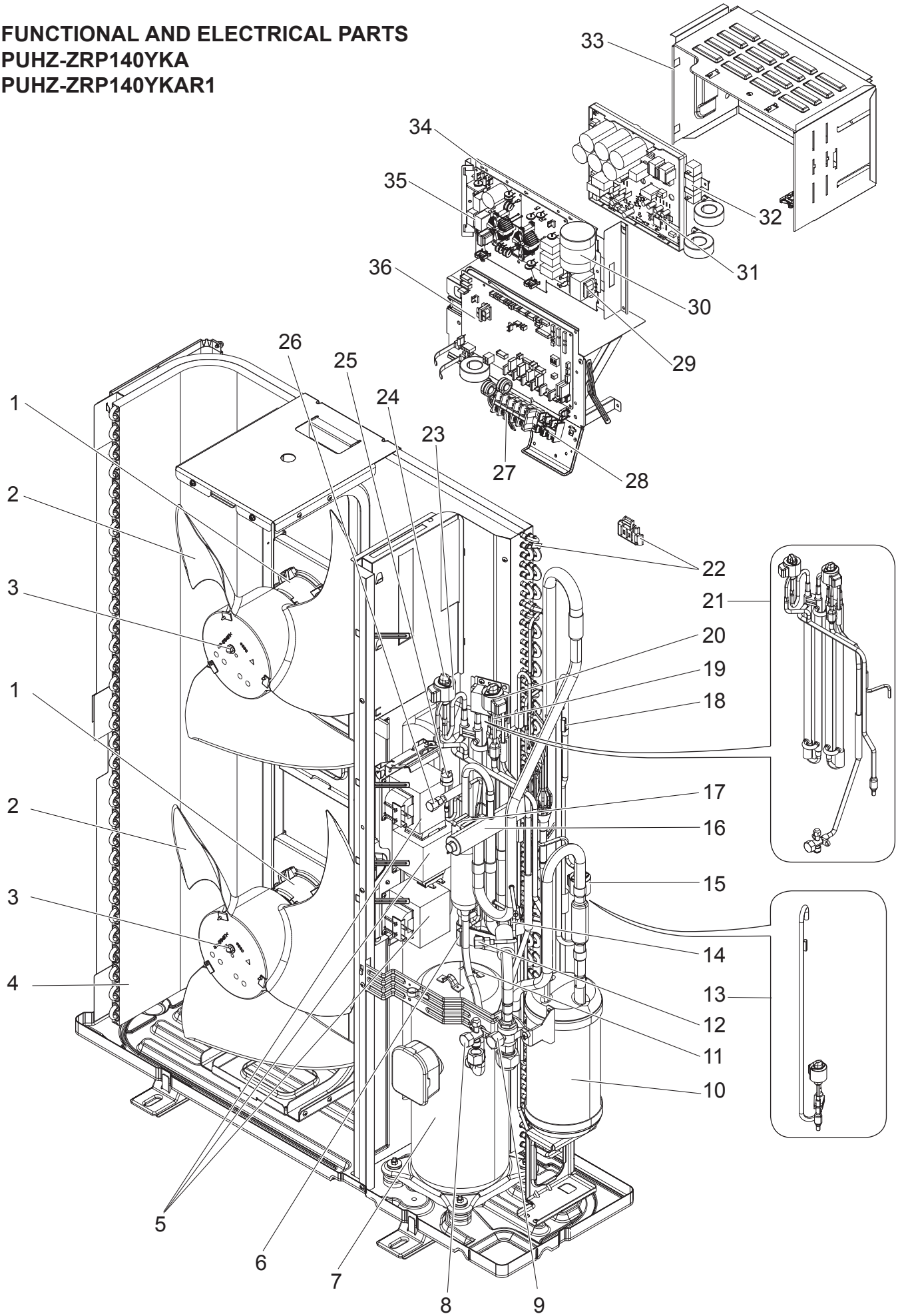

Parts numbers that are circled are not shown in the figures.

No.	Parts No.	Parts Name	Specification	Q'ty/unit		Remarks (Drawing No.)	Wiring Diagram Symbol
				PUHZ-ZRP140YKA	PUHZ-ZRP140YKAR1		
1	R01 E50 221	FAN MOTOR		2	2		MF1,2
2	R01 E10 115	PROPELLER FAN /D550		2	2		
3	R01 E09 097	NUT M6		2	2		
4	R01 H52 408	HEAT EXCHANGER		1	1		
5	T7W E12 259	REACTOR		3	3		ACL1,2,3
6	T7W E17 201	THERMISTOR	Discharge	1	1		TH4
7	T97 425 077	COMPRESSOR	ANB33FNCMT	1	1	Includes RUBBER MOUNTS	MC
8	R01 E25 410	STOP VALVE 3/8F	3/8	1	1		
9	R01 E12 410	BALL VALVE 5/8F	5/8	1	1	Includes STRAINER	
10	R01 E60 440	POWER RECEIVER		1	1		
11	T7W E11 201	SHELL THERMISTOR	Comp. surface	1	1		TH32
12	R01 E24 413	CHARGE PLUG /LB90		1	1		
13	T7W E31 401	LEV ASSY-A/C-REC		1	1	Includes coil for LEV-A	
14	R01 H00 202	THERMISTOR	Outdoor Pipe	1	1		TH3
15	R01 E50 242	COIL (LEV)/XAP-6P WH		1	1		LEV-A
16	R01 E15 403	4WAY VALVE		1	1		21S4
17	T7W E41 242	SOLENOID COIL (21S4)		1	1		21S4
18	R01 H79 202	THERMISTOR	Outdoor Pipe	1	1		TH33
19	R01 H20 401	LEV		1	1	For LEV-B	
20	R01 E49 242	COIL (LEV)/XAP-6P RED		1	1		LEV-B
21	T7W E37 401	LEV ASSY HIC		1	1	Includes coil for LEV-B,C & STV	
22	R01 H01 202	THERMISTOR W	Outdoor 2-Phase Pipe, Outdoor	1	1		TH6,7
23	R01 E68 242	COIL (LEV)/XAP-6P BLU		1	1		LEV-C
24	R01 H86 401	LEV		1	1	For LEV-C	
25	R01 E06 208	HIGH PRESSURE SWITCH		1	1		63H
26	R01 E18 413	CHARGE PLUG /ST		1	1		
27	T7W E30 716	T.B./L1.L2.L3.N.E	5P (L1,L2,L3,N,⏚)	1	1		TB1
28	R01 E19 246	T.B./S1.S2.S3	3P (S1,S2,S3)	1	1		TB2
29	R01 E31 259	REACTOR		1	1		ACL4
30	T7W E10 254	CAPACITOR		1	1		CK
31	T7W A30 323	POWER BOARD		1			P.B.
	T7W A40 323	POWER BOARD			1		P.B.
32	R01 E10 233	RESISTOR		1	1		RS
33	—	ELECTRICAL PARTS BOX		1	1	(BK00C410G17)	
34	T7W E75 310	CONVERTER BOARD		1	1		CONV.B.
35	T7W E28 346	NOISE FILTER BOARD		1	1		N.F.
36	T7W HP0 315	CONTROLLER BOARD		1	1		C.B.
(37)	R01 E14 239	FUSE 6.3A 250V	6.3A 250V	4	4		F1,2,3,4
(38)	R01 H93 202	THERMISTOR (HS)	HEAT SINK	1	1		TH8
(39)	R01 E14 510	LEAD ASSY COMP		1	1		

STRUCTURAL PARTS

PUHZ-ZRP35VKA	**PUHZ-ZRP50VKA**
PUHZ-ZRP35VKAR1	**PUHZ-ZRP50VKAR1**
PUHZ-ZRP35VKAR1-ER	**PUHZ-ZRP50VKAR1-ER**
PUHZ-ZRP35VKAR1-ET	**PUHZ-ZRP50VKAR1-ET**

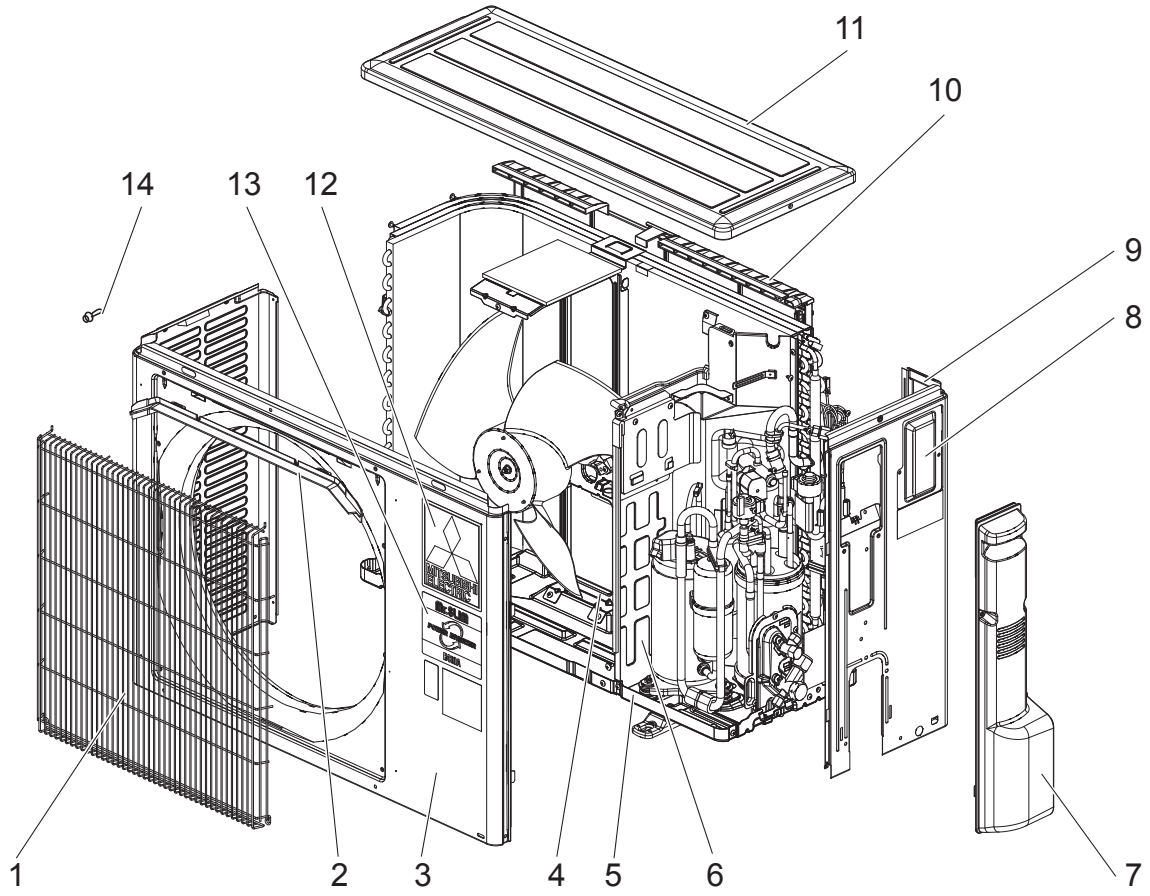

No.	Parts No.	Parts Name	Specification	Q'ty/unit								Remarks (Drawing No.)
				PUHZ-ZRP35VKA	PUHZ-ZRP50VKA	PUHZ-ZRP35VKAR1	PUHZ-ZRP50VKAR1	PUHZ-ZRP35VKAR1-ER	PUHZ-ZRP50VKAR1-ER	PUHZ-ZRP35VKAR1-ET	PUHZ-ZRP50VKAR1-ET	
1	R01 E61 691	GRILLE		1	1	1	1	1	1	1	1	
2	R01 E00 631	ICE GUARD		1	1	1	1	1	1	1	1	
3	R01 E21 668	FRONT PANEL		1	1	1	1	1	1	1	1	
4	R01 E45 130	MOTOR SUPPORT		1		1		1		1		
	R01 E46 130	MOTOR SUPPORT			1		1		1		1	
5	R01 E43 686	BASE ASSY		1	1	1	1	1	1	1	1	
6	—	SEPARATOR		1	1	1	1	1	1	1	1	(BK00J192G26)
7	R01 E28 667	SERVICE PANEL		1	1	1	1	1	1	1	1	
8	R01 E03 633	SERVICE PLATE		1	1	1	1	1	1	1	1	
9	R01 E12 682	BACK PANEL		1	1	1	1	1	1	1	1	
10	R01 E04 684	REAR GUARD		1		1		1		1		
	R01 E05 684	REAR GUARD			1		1		1		1	
11	R01 E32 641	TOP PANEL		1	1	1	1	1	1	1	1	
12	—	LABEL (MITSUBISHI)		1	1	1	1	1	1	1	1	(DG79R130H03)
13	—	LABEL (INVERTER)		1	1	1	1	1	1	1	1	(BK79C208G02)
14	—	TS.ST SCREW	(4×10)	17	17	17	17	17	17	17	17	(Z504K189H37)

STRUCTURAL PARTS

PUHZ-ZRP60VHA	**PUHZ-ZRP71VHA**
PUHZ-ZRP60VHAR1	**PUHZ-ZRP71VHAR1**
PUHZ-ZRP60VHAR1-ER	**PUHZ-ZRP71VHAR1-ER**
PUHZ-ZRP60VHAR1-ET	**PUHZ-ZRP71VHAR1-ET**

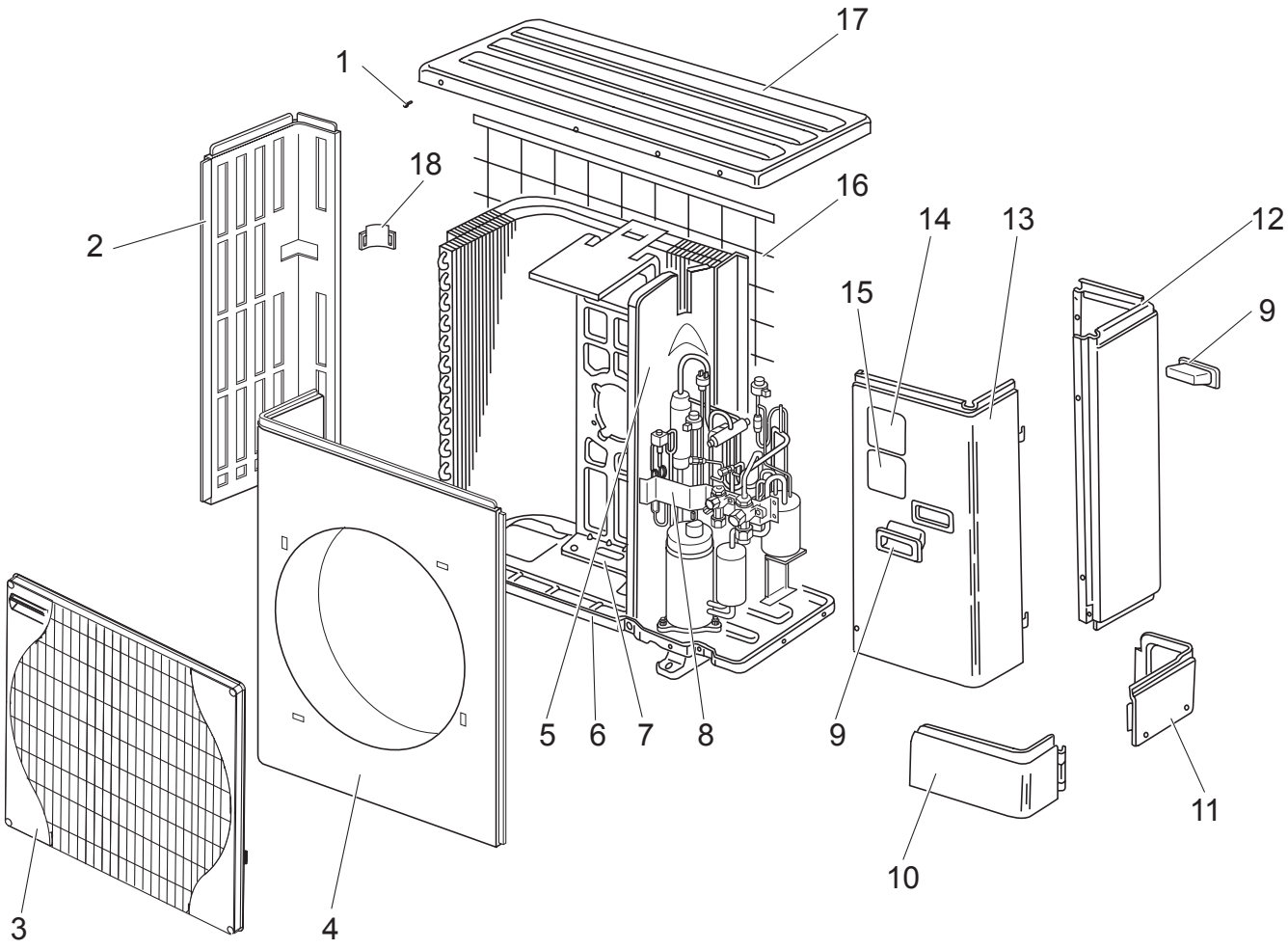

No.	Parts No.	Parts Name	Specification	Q'ty/unit								Remarks (Drawing No.)
				PUHZ-ZRP60VHA	PUHZ-ZRP71VHA	PUHZ-ZRP60VHAR1	PUHZ-ZRP71VHAR1	PUHZ-ZRP60VHAR1-ER	PUHZ-ZRP71VHAR1-ER	PUHZ-ZRP60VHAR1-ET	PUHZ-ZRP71VHAR1-ET	
1	—	F.ST SCREW	(5×12)	31	31	31	31	31	31	31	31	(DG12F536H12)
2	R01 E19 662	SIDE PANEL (L)		1	1	1	1	1	1	1	1	
3	R01 E33 691	GRILLE		1	1	1	1	1	1	1	1	
4	R01 E15 668	FRONT PANEL		1	1	1	1	1	1	1	1	
5	—	SEPARATOR		1	1	1	1	1	1	1	1	(BK00C143GH4)
6	R01 E44 686	BASE ASSY		1	1	1	1	1	1	1	1	
7	R01 E12 130	MOTOR SUPPORT		1	1	1	1	1	1	1	1	
8	—	VALVE BED ASSY		1	1	1	1	1	1	1	1	(BK00C375G17)
9	R01 E01 655	HANDLE		2	2	2	2	2	2	2	2	
10	R01 E40 658	COVER PANEL (FRONT)		1	1	1	1	1	1	1	1	
11	R01 E24 658	COVER PANEL (REAR)		1	1	1	1	1	1	1	1	
12	R01 E40 661	SIDE PANEL (R)		1	1	1	1	1	1	1	1	
13	T7W E18 668	SERVICE PANEL		1	1	1	1	1	1	1	1	
14	—	LABEL (MITSUBISHI)		1	1	1	1	1	1	1	1	(DG79R130H03)
15	—	LABEL (INVERTER)		1	1	1	1	1	1	1	1	(BK79C208G02)
16	R01 E06 698	REAR GUARD		1	1	1	1	1	1	1	1	
17	R01 E29 641	TOP PANEL		1	1	1	1	1	1	1	1	
18	R01 E02 655	HANDLE		1	1	1	1	1	1	1	1	

STRUCTURAL PARTS
PUHZ-ZRP100VKA
PUHZ-ZRP125VKA
PUHZ-ZRP140VKA
PUHZ-ZRP100YKA
PUHZ-ZRP125YKA
PUHZ-ZRP140YKA

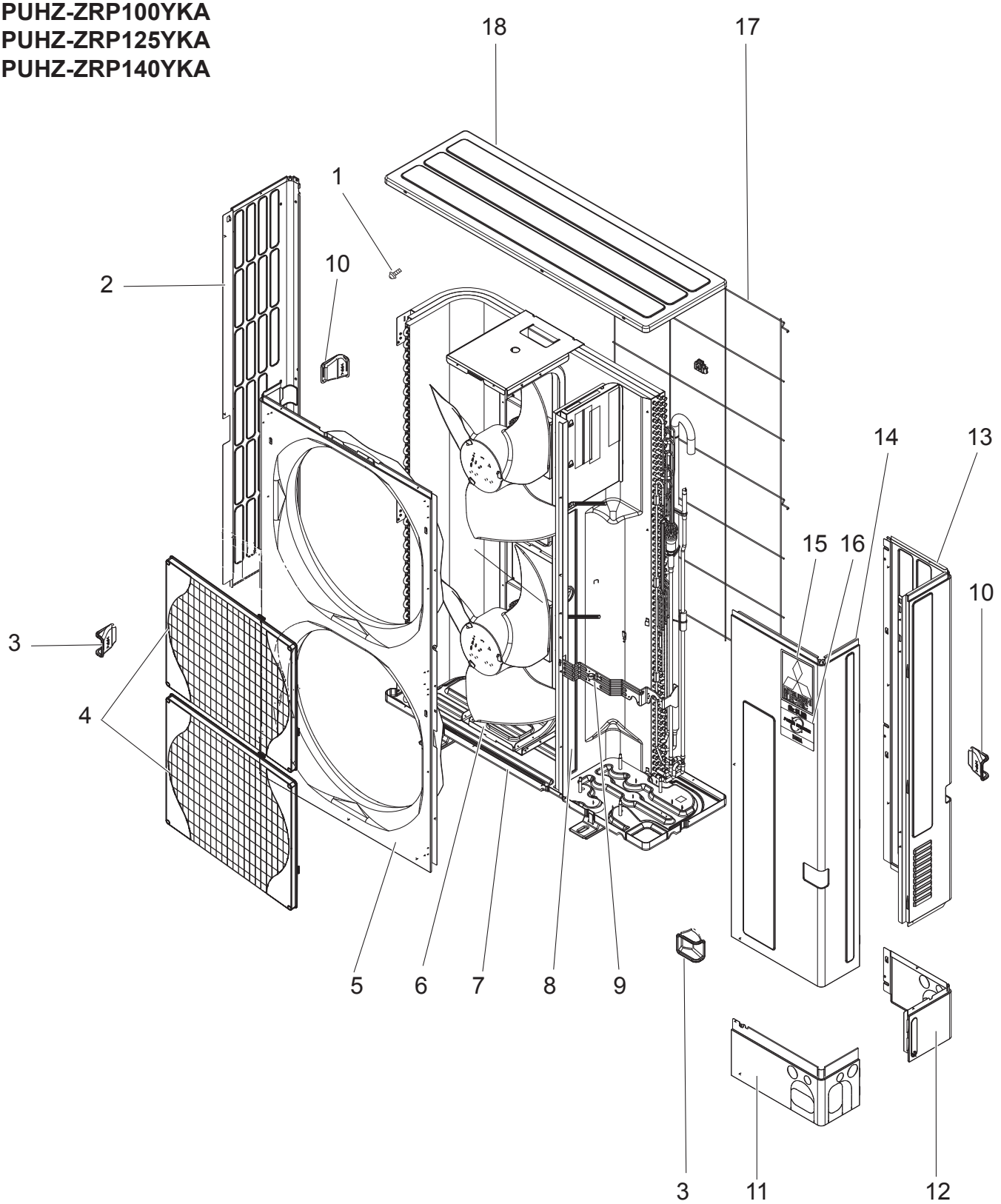

No.	Parts No.	Parts Name	Specification	Q'ty/unit						Remarks (Drawing No.)
				PUHZ-ZRP100VKA	PUHZ-ZRP125VKA	PUHZ-ZRP140VKA	PUHZ-ZRP100YKA	PUHZ-ZRP125YKA	PUHZ-ZRP140YKA	
1	—	F.ST SCREW	(5×12)	38	38	38	38	38	38	(DG12F536H12)
2	R01 E30 662	SIDE PANEL (L)		1	1	1	1	1	1	
3	R01 E04 655	HANDLE		2	2	2	2	2	2	
4	T7W E08 691	GRILLE		2	2	2	2	2	2	
5	T7W E13 667	FRONT PANEL		1	1	1	1	1	1	
6	R01 E47 130	MOTOR SUPPORT		1	1	1	1	1	1	
7	R01 E53 686	BASE ASSY		1	1	1	1	1	1	
8	—	SEPARATOR		1	1					(BK00B817GM1)
	—	SEPARATOR				1				(BK00B817GM5)
	—	SEPARATOR					1	1		(BK00B817GM3)
	—	SEPARATOR							1	(BK00B817GM4)
9	—	VALVE BED ASSY		1	1	1	1	1	1	(BK00C375G18)
10	R01 E03 655	HANDLE		2	2	2	2	2	2	
11	R01 E41 658	COVER PANEL (FRONT)		1	1	1	1	1	1	
12	R01 E34 658	COVER PANEL (REAR)		1	1	1	1	1	1	
13	R01 E55 661	SIDE PANEL (R)		1	1	1				
	T7W E37 661	SIDE PANEL (R)					1	1	1	
14	T7W E20 668	SERVICE PANEL		1	1	1	1	1	1	
15	—	LABEL (MITSUBISHI)		1	1	1	1	1	1	(DG79R130H03)
16	—	LABEL (INVERTER)		1	1	1	1	1	1	(BK79C208G02)
17	R01 E10 698	REAR GUARD		1	1	1	1	1	1	
18	R01 E36 641	TOP PANEL		1	1	1	1	1	1	

STRUCTURAL PARTS
PUHZ-ZRP100YKAR1
PUHZ-ZRP125YKAR1
PUHZ-ZRP140YKAR1

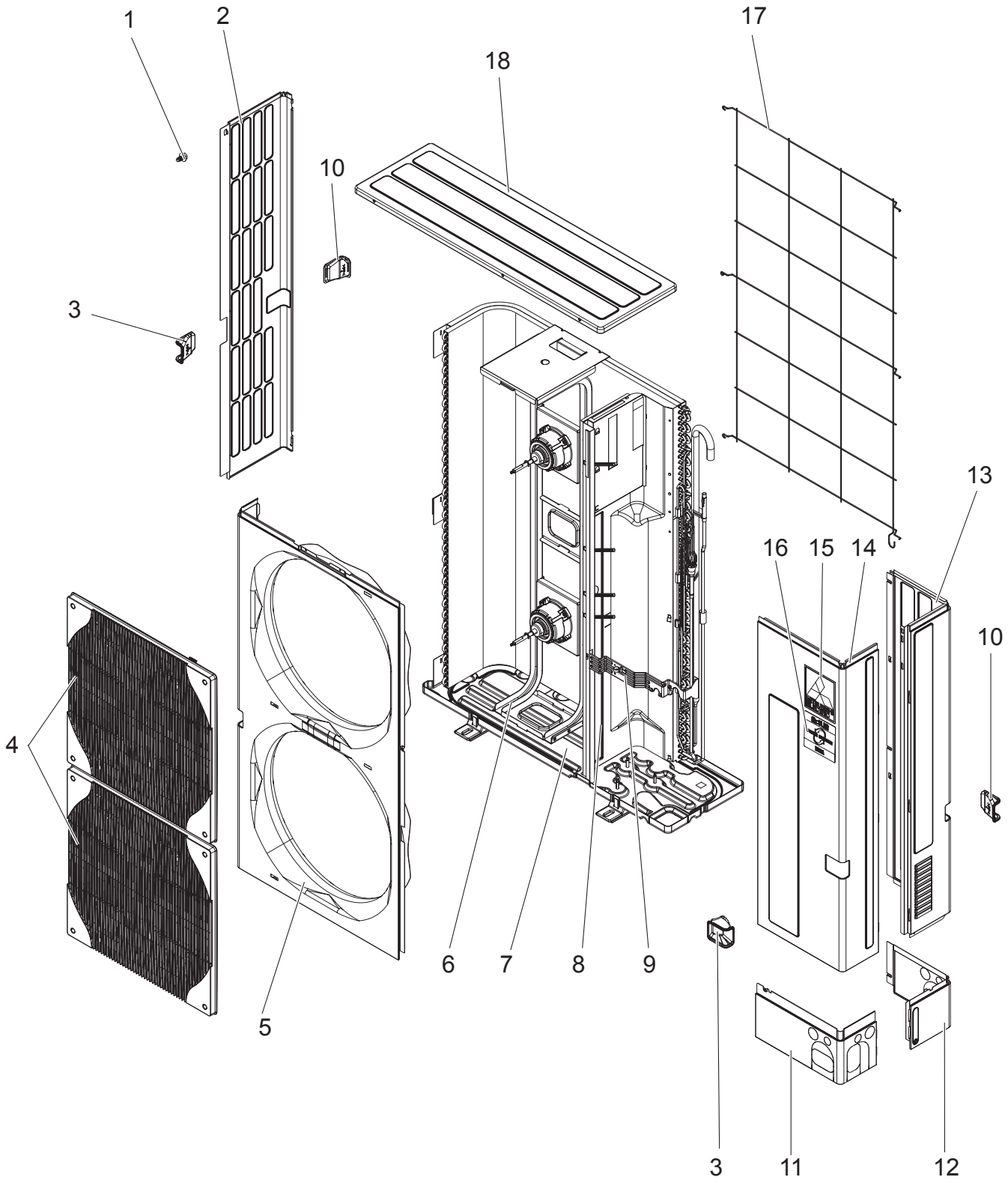

No.	Parts No.	Parts Name	Specification	Q'ty/unit			Remarks (Drawing No.)
				PUHZ-ZRP100YKAR1	PUHZ-ZRP125YKAR1	PUHZ-ZRP140YKAR1	
1	—	F.ST SCREW	(5×12)	1	1	1	(DG12F536H12)
2	R01 E30 662	SIDE PANEL (L)		2	2	2	
3	R01 E04 655	HANDLE		2	2	2	
4	T7W E08 691	GRILLE		1	1	1	
5	T7W E13 667	FRONT PANEL		1	1	1	
6	R01 E47 130	MOTOR SUPPORT		1	1	1	
7	R01 E53 686	BASE ASSY		1	1	1	
8	—	SEPARATOR		1	1		(BK00B817GM3)
	—	SEPARATOR				1	(BK00B817GM4)
9	—	VALVE BED ASSY		1	1	1	(BK00C375G18)
10	R01 E03 655	HANDLE		2	2	2	
11	R01 E41 658	COVER PANEL (FRONT)		1	1	1	
12	R01 E34 658	COVER PANEL (REAR)		1	1	1	
13	T7W E37 661	SIDE PANEL (R)		1	1	1	
14	T7W E20 668	SERVICE PANEL		1	1	1	
15	—	LABEL (MITSUBISHI)		1	1	1	(DG79R130H03)
16	—	LABEL (INVERTER)		1	1	1	(BK79C208G02)
17	R01 E10 698	REAR GUARD		1	1	1	
18	R01 E36 641	TOP PANEL		1	1	1	

Mr.SLIM

MITSUBISHI ELECTRIC CORPORATION

HEAD OFFICE: TOKYO BUILDING, 2-7-3, MARUNOUCHI, CHIYODA-KU, TOKYO 100-8310, JAPAN

©Copyright 2012 MITSUBISHI ELECTRIC CORPORATION
Issued: Mar. 2019 No.OCB527 REVISED EDITION-D
Issued: Sep. 2016 No.OCB527 REVISED EDITION-C
Issued: Jul. 2014 No.OCB527 REVISED EDITION-B
Issued: Jul. 2013 No.OCB527 REVISED EDITION-A
Published: Nov. 2012 No.OCB527
Made in Japan

Specifications are subject to change without notice.