MITSUBISHI ELECTRIC

INTERFACE

*Changes for the Better*

October 2007

No. OCB427

# PARTS CATALOG

[model name]

# PAC-IF011B-E

Note:
• RoHS compliant products have <G> mark on the spec name plate.

CONTENTS


1. RoHS PARTS LIST ..... 2
2. WIRING DIAGRAM ..... 3

# 1 RoHS PARTS LIST

## PAC-IF011B-E

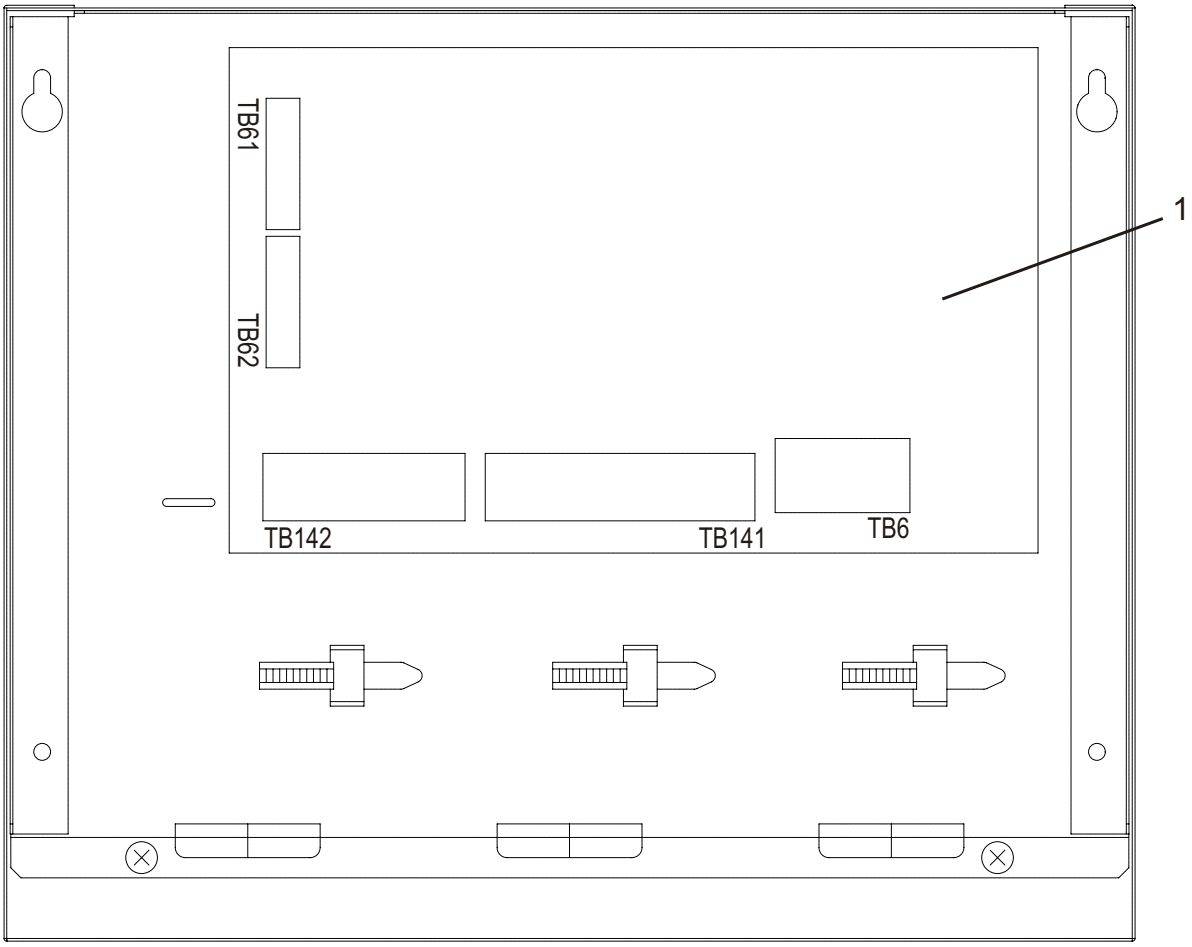


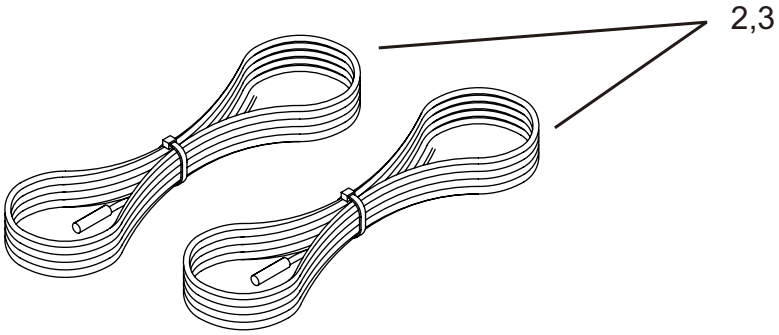


| No. | RoHS | Part No. | Part Name | Specification | Q'ty/unit PAC-IF011B-E | Remarks (Drawing No.) | Wiring Diagram Symbol | Recom-mended Q'ty |
|---|---|---|---|---|---|---|---|---|
| 1 | G | T7W E68 310 | INTERFACE BOARD | | 1 | | Interface controller | |
| 2 | G | T7W E54 202 | THERMISTOR | | 1 | Cable : Gray | TH1,TH2 | |
| 3 | G | T7W E55 202 | THERMISTOR | | 1 | Cable : Black | | |

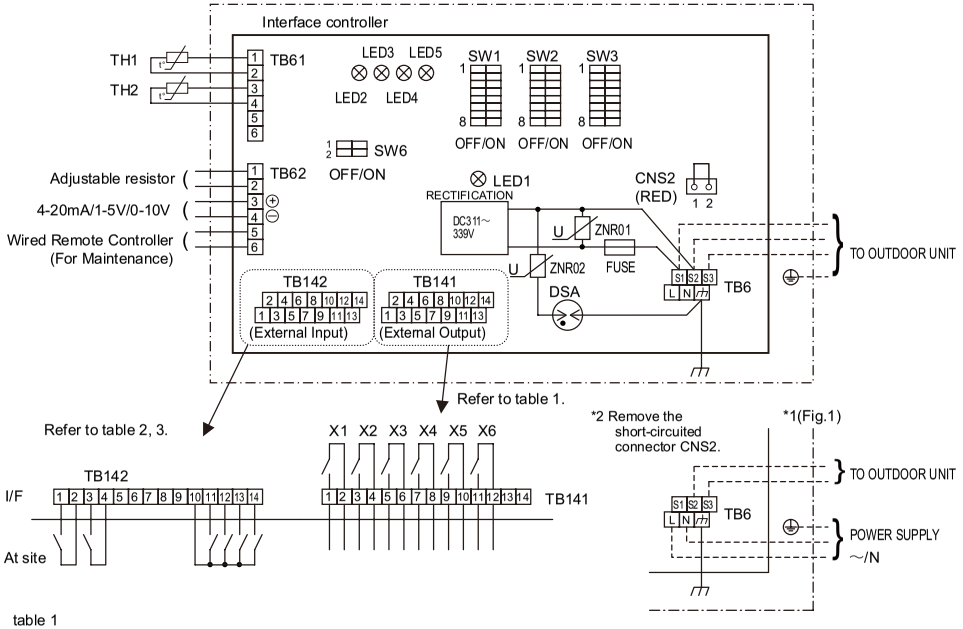


1. Symbols used in wiring diagram are, ▭ : Connector, ▭▭▭: Terminal block.
2. Interface controller and outdoor connecting wires have polarities, make sure to match terminal numbers(S1, S2, S3) for correct wirings.
3. Since the outdoor side electric wiring may change, be sure to check the outdoor unit electric wiring diagram for servicing.
4. This diagram shows the wiring of Interface controller and outdoor connecting wires.(specification of 230V), adopting superimposed system of power and signal.

*1 : When work to supply power separately to Interface controller and outdoor units was applied, refer to Fig 1.
*2 : Remove the short-circuited connector CNS2 when work to supply power separately to Interface controller and outdoor units was applied.

| SYMBOL | NAME |
|---|---|
| INTERFACE CONTROLLER | |
| TB6 | TERMINAL BLOCK(INTERFACE/OUTDOOR CONNECTING LINE) |
| TB141 | TERMINAL BLOCK (External Output) |
| TB142 | TERMINAL BLOCK (External Input REMOTE SWITCH) |
| TB62 | TERMINAL BLOCK (External Input) |
| TB61 | THERMISTOR(TARGET, PIPE) |
| LED1 | POWER SUPPLY(I/F) |
| LED2～5 | OPERATION INDICATION |
| FUSE | FUSE(T3.15AL250V) |
| SW1 | SWITCH(Input selection of inverter capacity setting) *See table 4. |
| SW2 | SWITCH(Function switch)*See table 5 and 6. |
| SW3 | SWITCH(LED2～5 Display setting) |
| SW6 | SWITCH(4-20mA/1-5V/0-10V switch)*See table 4. |
| ZNR01,02 | VARISTOR |
| DSA | SURGE ABSORBER |
| X1～X6 | RELAY |
| TH1 | TARGET TEMP. THERMISTOR (0℃/15kΩ, 25℃/5.2kΩ DETECT) |
| TH2 | PIPE TEMP. THERMISTOR/LIQUID (0℃/15kΩ, 25℃/5.2kΩ DETECT) |

table 1

| TB141 | | | Item | OFF | ON |
|---|---|---|---|---|---|
| 1-2 | (OUT1) | X1 | Operation Output | OFF | ON |
| 3-4 | (OUT2) | X2 | Error Output | Normal | Error |
| 5-6 | (OUT3) | X3 | Comp. Output | OFF(Comp. OFF) | ON (Comp. ON) |
| 7-8 | (OUT4) | X4 | Defrost Output | OFF | ON (Defrosting) |
| 9-10 | (OUT5) | X5 | Mode(Cool) Output | OFF | ON (Cooling) |
| 11-12 | (OUT6) | X6 | Mode(Heat) Output | OFF | ON (Heating) |
| 13-14 | (OUT7) | — | — | — | — |

table 2

| TB142 | Item | OFF | ON | Remark |
|---|---|---|---|---|
| 1-2 (IN1) | Forced Comp. OFF | Normal | Forced Comp. OFF | |
| 3-4 (IN2) | Fixed operation mode | Cooling | Heating | SW2-1, SW2-2: ON is valid. |

table 3

| TB142 10-11 (COM-IN5) | TB142 10-12 (COM-IN6) | TB142 10-13 (COM-IN7) | TB142 10-14 (COM-IN8) | Step for capacity setting TypeA | | | TypeB | | | Remark |
|---|---|---|---|---|---|---|---|---|---|---|
| OFF | OFF | OFF | OFF | [OFF] | OFF | 0% | [OFF] | OFF | 0% | OFF |
| ON | OFF | OFF | OFF | [ON] | Step1 | 10% | [ON] | Step1 | 10% | Fixed capacity (Hz fixed) mode |
| OFF | ON | OFF | OFF | | Step2 | 20% | | Step4 | 50% | |
| ON | ON | OFF | OFF | | Step3 | 30% | | ↑ | ↑ | |
| OFF | OFF | ON | OFF | | Step4 | 50% | | Step7 | 100% | |
| ON | OFF | ON | OFF | | Step5 | 70% | | ↑ | ↑ | |
| OFF | ON | ON | OFF | | Step6 | 80% | | ↑ | ↑ | |
| ON | ON | ON | OFF | | Step7 | 100% | | ↑ | ↑ | |
| OFF | OFF | OFF | ON | | Auto | | | Auto | | Auto mode |

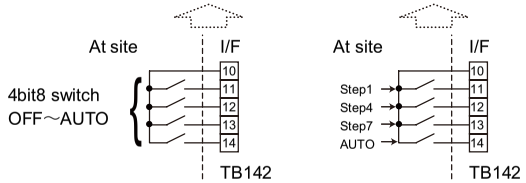


table 4 SW1, SW6 : Input selection of inverter capacity setting

| SW1-1 | SW1-2 | SW1-3 | SW6-1 | SW6-2 | Input | Step for capacity setting |
|---|---|---|---|---|---|---|
| OFF | OFF | OFF | OFF | OFF | TypeA(4bit-8 setting) | OFF/Step 1/Step 2/···/Step 7/Auto |
| ON | OFF | OFF | OFF | OFF | TypeB(1bit-1 setting) | OFF/Step 1/Step 4/Step 7/Auto |
| ON | ON | OFF | ON | ON | 4-20mA | OFF/Step 1/Step 2/···/Step 7 |
| ON | ON | OFF | OFF | ON | 1-5V | OFF/Step 1/Step 2/···/Step 7 |
| OFF | OFF | ON | OFF | OFF | 0-10V | OFF/Step 1/Step 2/···/Step 7 |
| ON | OFF | ON | OFF | OFF | 0-10kΩ | OFF/Step 1/Step 2/···/Step 7/Auto |
| OFF | ON | ON | OFF | OFF | No input(Auto mode) | Only Auto mode |

table 5 SW2-1/2-2 : Fixed operation mode

| SW2-1 | SW2-2 | Details |
|---|---|---|
| OFF | OFF | Not FIX (Depending on Remote controller setting) |
| ON | OFF | [Cooling]FIX |
| OFF | ON | [Heating]FIX |
| ON | ON | External input(Depending on TB142-3,4) |

table 6 SW2-3/2-4/2-5 : Fixed set temperature [For Auto mode]

| SW2-3 | SW2-4 | SW2-5 | Details |
|---|---|---|---|
| OFF | OFF | OFF | Not fixed (Remote controller setting) |
| ON | OFF | OFF | Cooling 19℃/Heating 17℃ FIX |
| OFF | ON | OFF | 20℃ FIX |
| ON | ON | OFF | 22℃ FIX |
| OFF | OFF | ON | 24℃ FIX |
| ON | OFF | ON | 26℃ FIX |
| OFF | ON | ON | 28℃ FIX |
| ON | ON | ON | Cooling 30℃ / Heating 28℃ FIX |

MITSUBISHI ELECTRIC CORPORATION
HEAD OFFICE : TOKYO BLDG., 2-7-3, MARUNOUCHI, CHIYODA-KU, TOKYO 100-8310, JAPAN

©Copyright 2007 MITSUBISHI ELECTRIC ENGINEERING CO., LTD.
Distributed in Oct. 2007 No. OCB427 PDF 8
Made in Japan

New publication, effective Oct. 2007
Specifications subject to change without notice.