Changes for the Better

MITSUBISHI ELECTRIC

SPLIT-TYPE AIR CONDITIONERS

INDOOR UNIT

PARTS CATALOG

No. OBB529

Models

MSC-GE20VB - E1
MSC-GE25VB - E1
MSC-GE35VB - E1
MS-GE50VB - E1
MSH-GE50VB - E1

CONTENTS

1. RoHS PARTS LIST 2
2. OPTIONAL PARTS 6

SERVICE MANUAL (OBH529)

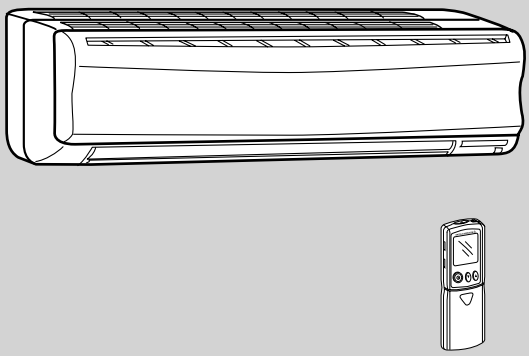

NOTE:
RoHS compliant products have <G> mark on the spec name plate.

CE

1 RoHS PARTS LIST

MSC-GE20VB MSC-GE25VB MSC-GE35VB

1-1. INDOOR UNIT STRUCTURAL PARTS

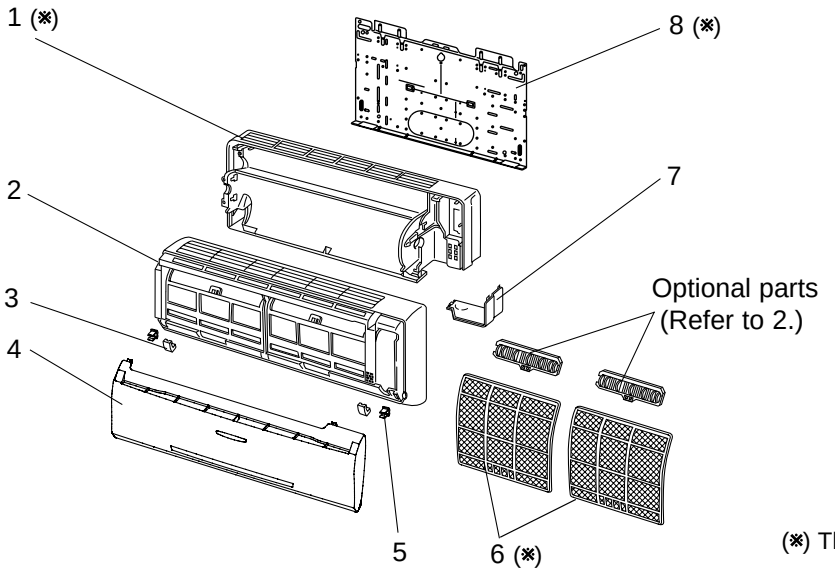

1-2. ACCESSORY AND REMOTE CONTROLLER

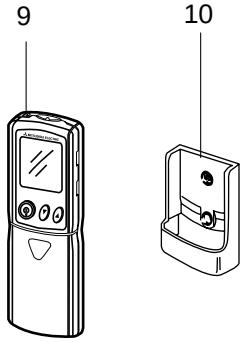

(※) These figures show MSC-GE35VB.

1-1. INDOOR UNIT STRUCTURAL PARTS

No.	RoHS	Part No.	Part Name	Symbol in Wiring Diagram	Q'ty/unit MSC-GE20VB-E1	MSC-GE25VB-E1	MSC-GE35VB-E1	Remarks
1	G	E12 763 234	BOX		1	1		
	G	E12 764 234	BOX				1	
2	G	E12 E40 000	PANEL ASSEMBLY		1	1	1	Including No.3,4,5
3	G	E12 763 067	SCREW CAP		2	2	2	2PCS/SET
4	G	E12 E40 010	FRONT PANEL		1	1	1	
5	G	E12 408 142	CATCH		2	2	2	2PCS/SET
6	G	E12 763 100	CATECHIN AIR FILTER		2	2		1PCE/SET
	G	E12 764 100	CATECHIN AIR FILTER				2	1PCE/SET
7	G	E12 763 975	CORNER BOX (RIGHT)		1	1	1	
8	G	E12 408 970	INSTALLATION PLATE		1	1		
	G	E12 751 970	INSTALLATION PLATE				1	

1-2. ACCESSORY AND REMOTE CONTROLLER

9	G	E12 749 426	REMOTE CONTROLLER		1	1	1	KM04F
10	G	E12 527 083	REMOTE CONTROLLER HOLDER		1	1	1	

ROHS PARTS LIST

MSC-GE20VB MSC-GE25VB MSC-GE35VB

1-3. INDOOR UNIT ELECTRICAL PARTS AND FUNCTIONAL PARTS

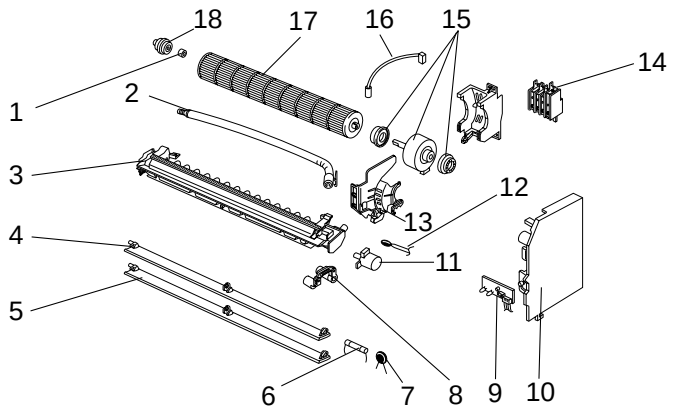

1-4. INDOOR UNIT HEAT EXCHANGER

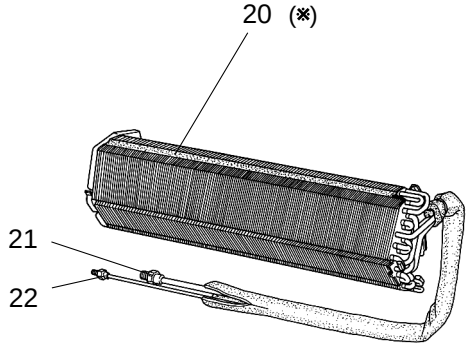

(※) These figures show MSC-GE35VB.

1-3. INDOOR UNIT ELECTRICAL PARTS AND FUNCTIONAL PARTS

Part number that is circled is not shown in the illustration.

No.	RoHS	Part No.	Part Name	Symbol in Wiring Diagram	Q'ty/unit			Remarks
					MSC-GE20VB-E1	MSC-GE25VB-E1	MSC-GE35VB-E1	
1	G	E12 001 504	SLEEVE BEARING		1	1	1	
2	G	E12 897 702	DRAIN HOSE		1	1	1	
3	G	E12 A59 235	NOZZLE ASSEMBLY		1	1	1	
4	G	E12 781 040	VANE UPPER		1	1	1	
5	G	E12 781 041	VANE LOWER		1	1	1	
6	G	E12 A49 382	FUSE	F11	1	1	1	T3.15AL250V
7	G	E12 829 385	VARISTOR	NR11	1	1	1	
8	G	E12 763 034	VANE CRANK SET		1	1	1	
9	G	E12 815 468	POWER MONITOR, RECEIVER P.C. BOARD		1	1	1	
10	G	E12 962 452	ELECTRONIC CONTROL P.C.BOARD		1			AUTO RESTART
	G	E12 963 452	ELECTRONIC CONTROL P.C.BOARD			1		AUTO RESTART
	G	E12 964 452	ELECTRONIC CONTROL P.C.BOARD				1	AUTO RESTART
11	G	E12 749 303	VANE MOTOR	MV	1	1	1	
12	G	E12 151 308	ROOM TEMPERATURE THERMISTOR	RT11	1	1	1	
13	G	E12 749 333	MOTOR BAND		1	1	1	
14	G	E12 691 375	TERMINAL BLOCK	TB	1	1	1	
15	G	E12 749 300	INDOOR FAN MOTOR (RC4V19- □□)	MF	1	1		Including fan motor rubber mount 2PCS/SET
	G	E12 751 300	INDOOR FAN MOTOR (RC4V19- □□)	MF			1	Including fan motor rubber mount 2PCS/SET
16	G	E12 749 307	INDOOR COIL THERMISTOR	RT12	1	1	1	
17	G	E12 A59 302	LINE FLOW FAN		1	1	1	
18	G	E12 408 509	BEARING MOUNT		1	1		
	G	E12 751 509	BEARING MOUNT				1	
19	G	E12 749 385	VARISTOR	NR12	1	1	1	

1-4. INDOOR UNIT HEAT EXCHANGER

20	G	E12 C38 620	INDOOR HEAT EXCHANGER		1	1		
	G	E12 E42 620	INDOOR HEAT EXCHANGER				1	
21	G	E12 151 666	UNION(GAS)		1	1	1	ø9.52
22	G	E12 151 667	UNION(LIQUID)		1	1	1	ø6.35

RoHS PARTS LIST

MS-GE50VB MSH-GE50VB

1-5. INDOOR UNIT STRUCTURAL PARTS **1-6. INDOOR UNIT HEAT EXCHANGER**

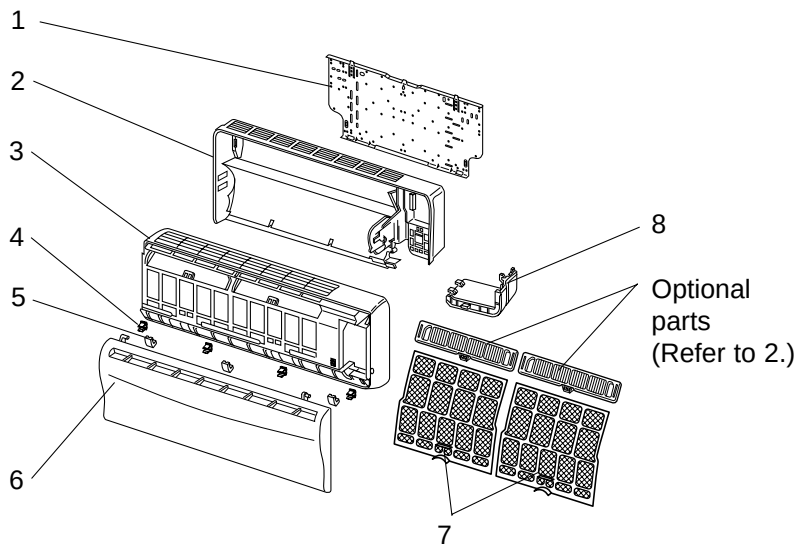

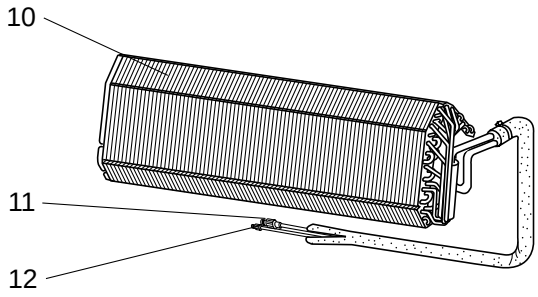

1-5. INDOOR UNIT STRUCTURAL PARTS

Part number that is circled is not shown in the illustration.

No.	RoHS	Part No.	Part Name	Symbol in Wiring Diagram	Q'ty/unit		Remarks
					MS-GE50VB-E1	MSH-GE50VB-E1	
1	G	E12 527 970	INSTALLATION PLATE		1	1	
2	G	E12 685 234	BOX		1	1	
3	G	E12 888 000	PANEL ASSEMBLY		1	1	Including No.4,5,6
4	G	E12 408 142	CATCH		4	4	4PCS/SET
5	G	E12 685 067	SCREW CAP		3	3	3PCS/SET
6	G	E12 888 010	FRONT PANEL		1	1	
7	G	E12 534 100	CATECHIN AIR FILTER		2	2	1PCE/SET
8	G	E12 685 975	CORNER BOX RIGHT		1	1	
9	G	E12 891 007	LAMP PANEL		1	1	

1-6. INDOOR UNIT HEAT EXCHANGER

10	G	E12 E07 620	INDOOR HEAT EXCHANGER		1	1	
11	G	E12 179 667	UNION (GAS)		1	1	ø12.7
12	G	E12 151 667	UNION (LIQUID)		1	1	ø6.35

RoHS PARTS LIST

MS-GE50VB MSH-GE50VB

1-7. INDOOR UNIT FUNCTIONAL PARTS AND ELECTRICAL PARTS

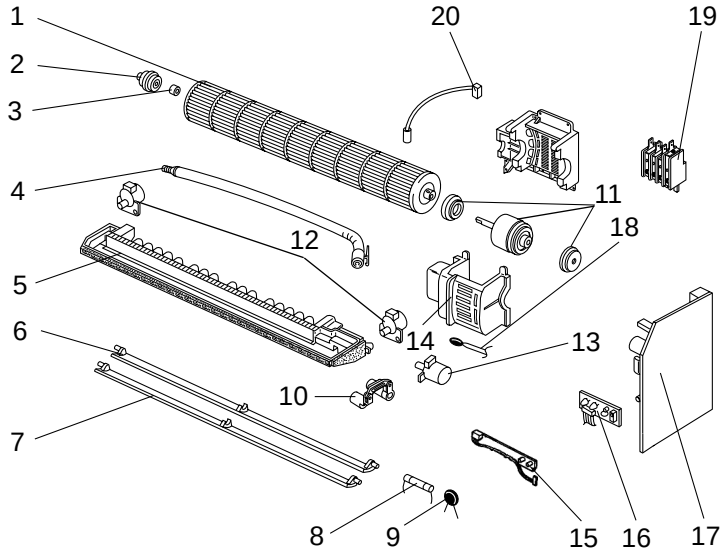

1-8. ACCESSORY AND REMOTE CONTROLLER

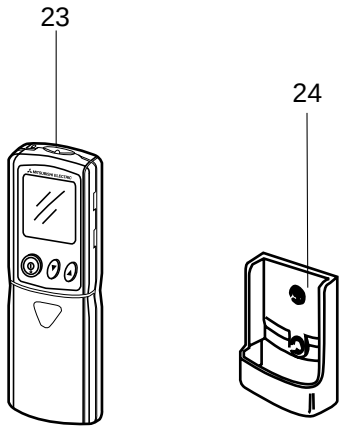

1-7. INDOOR UNIT FUNCTIONAL PARTS AND ELECTRICAL PARTS

Part numbers that are circled are not shown in the illustration.

No.	RoHS	Part No.	Part Name	Symbol in Wiring Diagram	Q'ty/unit		Remarks
					MS-GE50VB-E1	MSH-GE50VB-E1	
1	G	E12 527 302	LINE FLOW FAN		1	1	
2	G	E12 408 509	BEARING MOUNT		1	1	
3	G	E12 001 504	SLEEVE BEARING		1	1	
4	G	E12 408 702	DRAIN HOSE		1	1	
5	G	E12 996 235	NOZZLE		1	1	
6	G	E12 685 040	VANE UPPER		1	1	
7	G	E12 685 041	VANE LOWER		1	1	
8	G	E12 A49 382	FUSE	F11	1	1	T3.15AL250V
9	G	E12 B75 385	VARISTOR	NR11	1	1	
10	G	E12 527 034	VANE CRANK SET		1	1	
11	G	E12 E07 300	INDOOR FAN MOTOR (RC4V32- □□)	MF	1	1	Including fan motor rubber mount 2PCS/SET
12	G	E12 448 303	VANE MOTOR (VERTICAL)	MV2	2	2	RIGHT & LEFT
13	G	E12 408 303	VANE MOTOR (HORIZONTAL)	MV1	1	1	UP & DOWN
14	G	E12 817 333	MOTOR BAND		1	1	
15	G	E12 528 329	DISPLAY P.C. BOARD		1	1	
16	G	E12 527 468	RECEIVER P.C. BOARD		1	1	
17	G	E12 E07 452	ELECTRONIC CONTROL P.C. BOARD		1		AUTO RESTART Including No.16
	G	E12 E08 452	ELECTRONIC CONTROL P.C. BOARD			1	AUTO RESTART Including No.16
18	G	E12 527 308	ROOM TEMPERATURE THERMISTOR	RT11	1	1	
19	G	E12 817 375	TERMINAL BLOCK	TB	1		
	G	E12 819 375	TERMINAL BLOCK	TB		1	
20	G	E12 408 307	INDOOR COIL THERMISTOR	RT12	1	1	
21	G	E12 528 034	VANE MOTOR SUPPORT SET (RIGHT)		1	1	
22	G	E12 529 034	VANE MOTOR SUPPORT SET (LEFT)		1	1	

1-8. ACCESSORY AND REMOTE CONTROLLER

23	G	E12 527 426	REMOTE CONTROLLER		1		KM04B
	G	E12 529 426	REMOTE CONTROLLER			1	KM04A
24	G	E12 527 083	REMOTE CONTROLLER HOLDER		1	1	

2 OPTIONAL PARTS

AIR CLEANING FILTER

- Normal life of AIR CLEANING FILTER is 4 months. However, when it becomes dirty, replace it as soon as possible.
- Clogged AIR CLEANING FILTER may reduce the air conditioner capacity or cause frost on the air outlet.
- DO NOT reuse AIR CLEANING FILTER even if it is washed.
- DO NOT remove or attach AIR CLEANING FILTER during unit operation.

Model	Part No.
MSC-GE20VB- E1 MSC-GE25VB- E1 MSC-GE35VB- E1	MAC-1300FT

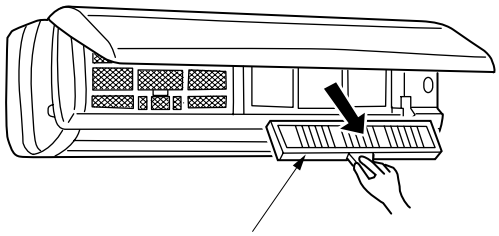

Air cleaning filter
(White bellows type)

Model	Part No.
MS-GE50VB- E1 MSH-GE50VB- E1	MAC-1700FT

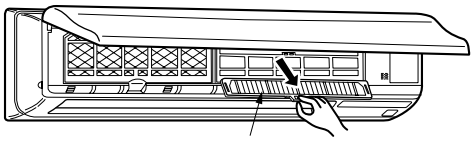

Air cleaning filter (White bellows type)

MITSUBISHI ELECTRIC CORPORATION
HEAD OFFICE: TOKYO BLDG., 2-7-3, MARUNOUCHI, CHIYODA-KU, TOKYO 100-8310, JAPAN

© Copyright 2008 MITSUBISHI ELECTRIC ENGINEERING CO.,LTD
Distributed in Dec. 2008. No.OBB529 5
Made in Japan

New publication, effective Dec. 2008
Specifications subject to change without notice.