MITSUBISHI ELECTRIC

Changes for the Better

SPLIT-TYPE AIR CONDITIONERS

Revision C:
• MSZ-FD•VA(S)- E2 has been added.
Please void OBB488 REVISED EDITION-B.

INDOOR UNIT
PARTS CATALOG

No. OBB488
REVISED EDITION-C

Models

MSZ-FD25VA - E1, E2
MSZ-FD25VAS - E1, E2
MSZ-FD35VA - E1, E2
MSZ-FD35VAS - E1, E2
MSZ-FD50VA - E1, E2
MSZ-FD50VAS - E1, E2

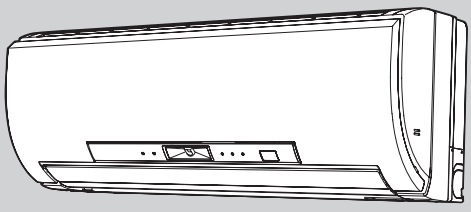

CONTENTS

1. RoHS PARTS LIST····· 2
2. OPTIONAL PARTS····· 7

SERVICE MANUAL (OBH488)

NOTE:
RoHS compliant products have <G> mark on the spec name plate.

CE

1 RoHS PARTS LIST

MSZ-FD25VA MSZ-FD25VAS MSZ-FD35VA MSZ-FD35VAS MSZ-FD50VA MSZ-FD50VAS

1-1. INDOOR UNIT STRUCTURAL PARTS

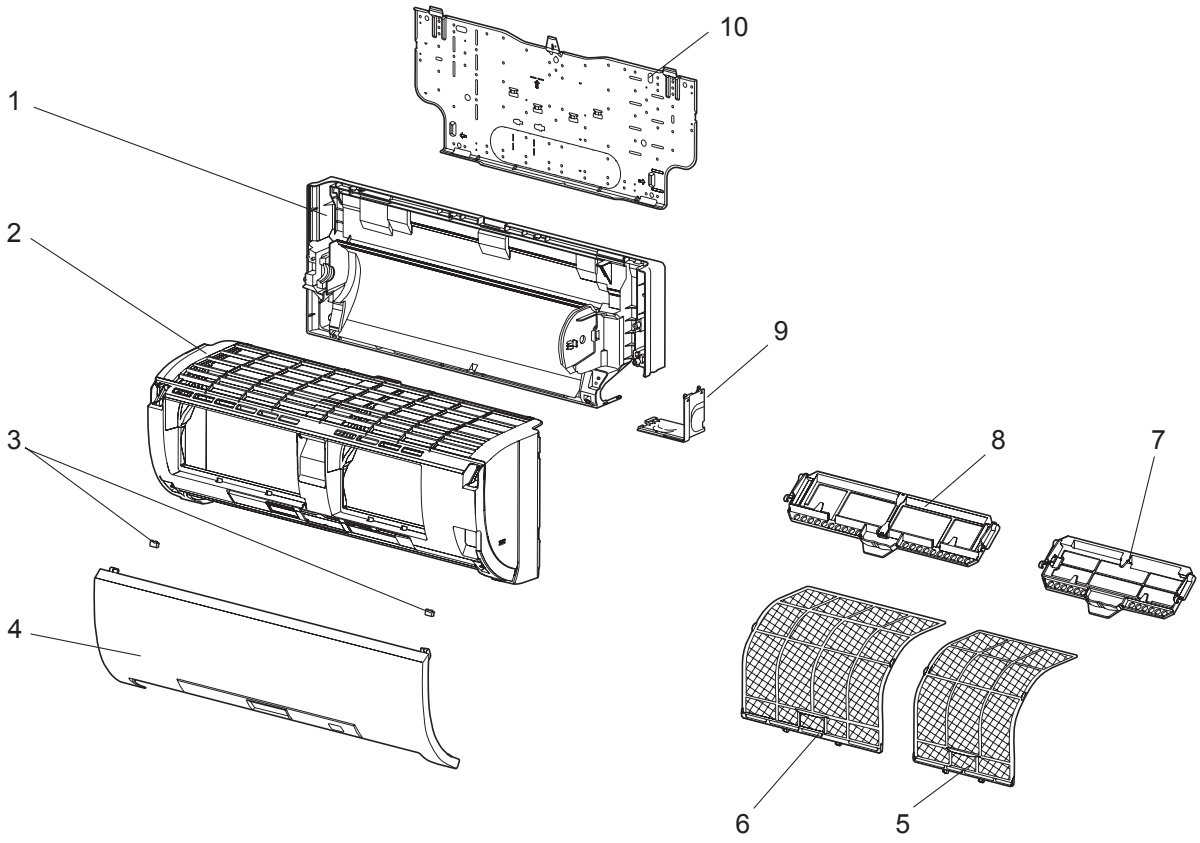

1-2. ACCESSORY AND REMOTE CONTROLLER

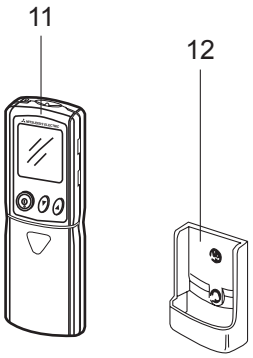

1-1. INDOOR UNIT STRUCTURAL PARTS

No.	RoHS	Part No.	Part name	Symbol in Wiring Diagram	Q'ty/unit												Remarks
					MSZ-FD												
					25VA-		25VAS-		35VA-		35VAS-		50VA-		50VAS-		
					E1	E2	E1	E2	E1	E2	E1	E2	E1	E2	E1	E2	
1	G	E12 C32 234	BOX ASSEMBLY		1	1	1	1	1	1	1	1					
	G	E12 D80 234											1	1	1	1	
2	G	E12 C32 000	PANEL ASSEMBLY		1	1			1	1			1	1			Including No. 3,4
	G	E12 C64 000					1	1			1	1			1	1	
3	G	E12 913 067	SCREW CAP		2	2	2	2	2	2	2	2	2	2	2	2	2 PC/SET
4	G	E12 C32 010	FRONT PANEL		1	1			1	1			1	1			
	G	E12 C64 010					1	1			1	1			1	1	
5	G	E12 C32 100	AIR FILTER (RIGHT)		1	1	1	1	1	1	1	1	1	1	1	1	
6	G	E12 C33 100	AIR FILTER (LEFT)		1	1	1	1	1	1	1	1	1	1	1	1	
7	G	———	PLASMA ANTI-ALLERGY ENZYME FILTER		1	1	1	1	1	1	1	1	1	1	1	1	MAC-417FT-E
8	G	———	PLASMA DEODRIZING FILTER		1	1	1	1	1	1	1	1	1	1	1	1	MAC-307FT-E
9	G	E12 C32 975	CORNER BOX (RIGHT)		1	1	1	1	1	1	1	1	1	1	1	1	
10	G	E12 C32 970	INSTALLATION PLATE		1	1	1	1	1	1	1	1	1	1	1	1	

1-2. ACCESSORY AND REMOTE CONTROLLER

11	G	E12 C32 426	REMOTE CONTROLLER		1		1		1		1		1		1		KM08A
	G	E12 E52 426				1		1		1		1		1		1	KM09D
12	G	E12 527 083	REMOTE CONTROLLER HOLDER		1	1	1	1	1	1	1	1	1	1	1	1	

MSZ-FD25VA MSZ-FD25VAS MSZ-FD35VA MSZ-FD35VAS MSZ-FD50VA MSZ-FD50VAS

1-3. INDOOR UNIT ELECTRICAL PARTS AND FUNCTIONAL PARTS

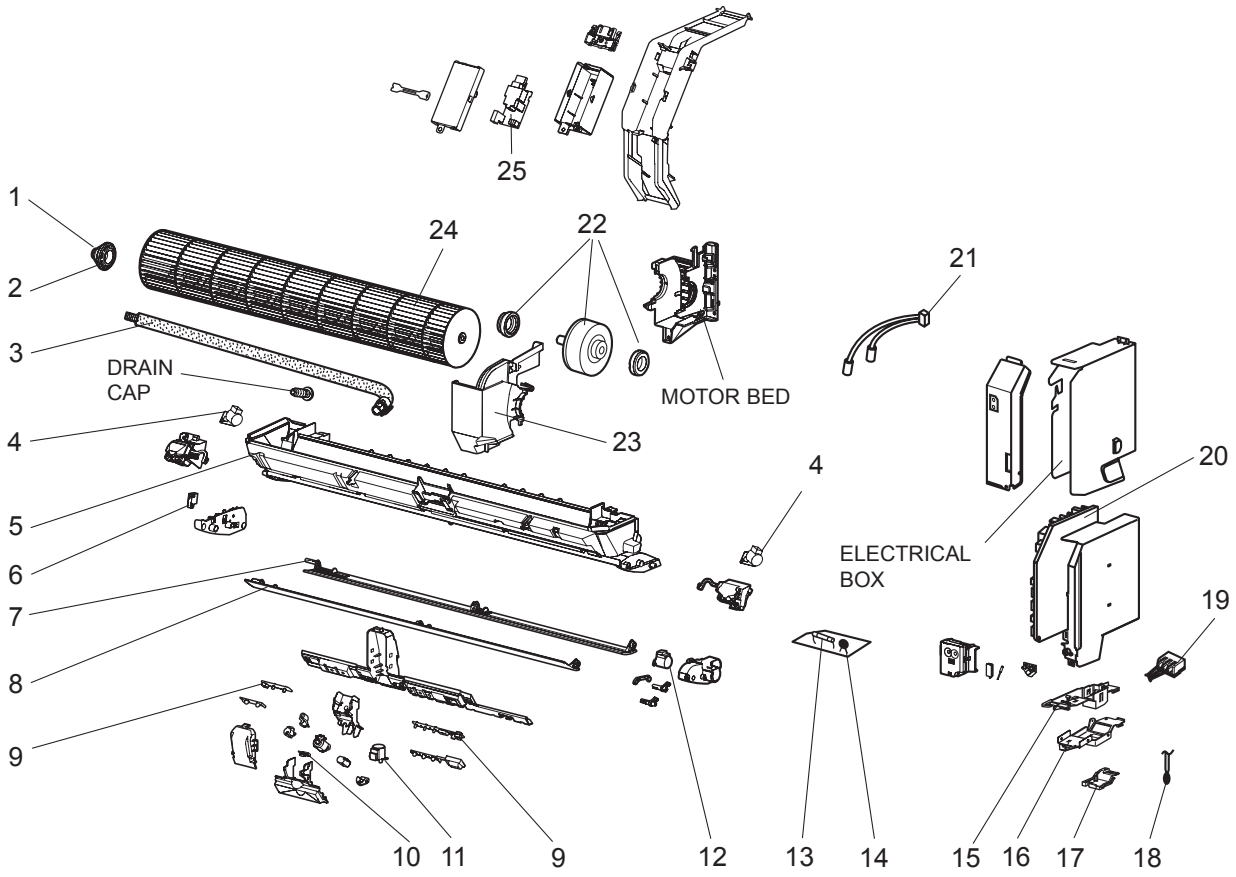

1-3. INDOOR UNIT ELECTRICAL PARTS AND FUNCTIONAL PARTS

No.	RoHS	Part No.	Part name	Symbol in Wiring Diagram	Q'ty/unit												Remarks
					MSZ-FD												
					25VA-		25VAS-		35VA-		35VAS-		50VA-		50VAS-		
					E1	E2	E1	E2	E1	E2	E1	E2	E1	E2	E1	E2	
1	G	E12 751 509	BEARING MOUNT		1	1	1	1	1	1	1	1	1	1	1	1	
2	G	E12 001 504	SLEEVE BEARING		1	1	1	1	1	1	1	1	1	1	1	1	
3	G	E12 897 702	DRAIN HOSE		1	1	1	1	1	1	1	1	1	1	1	1	
4	G	E12 C32 303	VANE MOTOR (VERTICAL)	MV2	2	2	2	2	2	2	2	2	2	2	2	2	RIGHT & LEFT
5	G	E12 C32 235	NOZZLE ASSEMBLY		1	1			1	1			1	1			
	G	E12 C64 235					1	1			1	1			1	1	
6	G	E12 C32 316	INTERLOCK SWITCH (FAN)		1	1	1	1	1	1	1	1	1	1	1	1	
7	G	E12 C32 041	HORIZONTAL VANE (LOWER)		1	1	1	1	1	1	1	1	1	1	1	1	
8	G	E12 C32 040	HORIZONTAL VANE (UPPER)		1	1			1	1			1	1			
	G	E12 C64 040					1	1			1	1			1	1	
9	G	E12 C32 468	POWER MONITOR RECEIVER P.C. BOARD		1	1	1	1	1	1	1	1	1	1	1	1	
10	G	E12 C32 391	i-see Sensor	RR	1	1	1	1	1	1	1	1	1	1	1	1	
11	G	E12 A89 303	i-see Sensor MOTOR	MT	1	1	1	1	1	1	1	1	1	1	1	1	
12	G	E12 C33 303	VANE MOTOR (HORIZONTAL)	MV1	1	1	1	1	1	1	1	1	1	1	1	1	UP & DOWN
13	G	E12 A49 382	FUSE	F11	1	1	1	1	1	1	1	1	1	1	1	1	T3.15AL250V
14	G	E12 A43 385	VARISTOR	NR11	1	1	1	1	1	1	1	1	1	1	1	1	
15	G	E12 897 779	TERMINAL BLOCK HOLDER		1	1	1	1	1	1	1	1	1	1	1	1	
16	G	E12 897 780	TERMINAL BLOCK COVER		1	1	1	1	1	1	1	1	1	1	1	1	
17	G	E12 897 784	V.A. CLAMP		1	1	1	1	1	1	1	1	1	1	1	1	
18	G	E12 C32 308	ROOM TEMPERATURE THERMISTOR	RT11	1	1	1	1	1	1	1	1	1	1	1	1	
19	G	E12 913 375	TERMINAL BLOCK	TB	1	1	1	1	1	1	1	1	1	1	1	1	
20	G	E12 C32 452	ELECTRONIC CONTROL P.C. BOARD ※1		1	1	1	1									
	G	E12 C33 452							1	1	1	1					
	G	E12 D80 452											1	1	1	1	
21	G	E12 C32 307	INDOOR COIL THERMISTOR	RT12, RT13	1	1	1	1	1	1	1	1	1	1	1	1	
22	G	E12 C32 300	INDOOR FAN MOTOR ※2	MF	1	1	1	1	1	1	1	1	1	1	1	1	RC0J40-□□
23	G	E12 C32 333	MOTOR BAND		1	1	1	1	1	1	1	1	1	1	1	1	
24	G	E12 C32 302	LINE FLOW FAN		1	1	1	1	1	1	1	1	1	1	1	1	
25	G	E12 C32 440	PLASMA POWER P.C. BOARD		1	1	1	1	1	1	1	1	1	1	1	1	

※1 Including SW P.C. BOARD
※2 Including FAN MOTOR RUBBER MOUNT (2 PC/SET)

MSZ-FD25VA MSZ-FD25VAS MSZ-FD35VA MSZ-FD35VAS MSZ-FD50VA MSZ-FD50VAS

1-4. INDOOR UNIT HEAT EXCHANGER

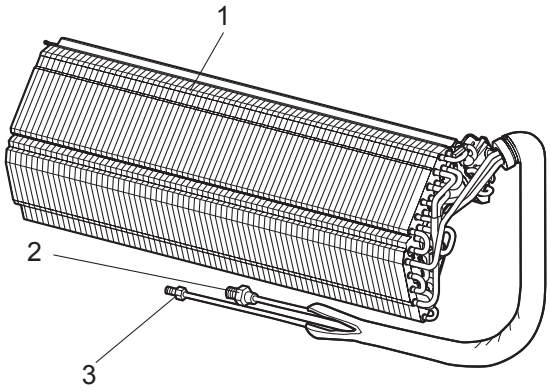

No.	RoHS	Part No.	Part name	Symbol in Wiring Diagram	Q'ty/unit												Remarks
					MSZ-FD												
					25VA-		25VAS-		35VA-		35VAS-		50VA-		50VAS-		
					E1	E2	E1	E2	E1	E2	E1	E2	E1	E2	E1	E2	
1	G	E12 C32 620	INDOOR HEAT EXCHANGER		1	1	1	1	1	1	1	1					
	G	E12 D80 620											1	1	1	1	
2	G	E12 815 666	UNION (GAS)		1	1	1	1	1	1	1	1					ø9.52
	G	E12 155 666											1	1	1	1	ø12.7
3	G	E12 C32 667	UNION (LIQUID)		1	1	1	1	1	1	1	1	1	1	1	1	ø6.35

2 OPTIONAL PARTS

2-1. QUICK CLEAN KIT

● You can sweep the surface of heat exchanger and fan if you install the special-made brush to your vacuum cleaner.

Model	Part No.	
MSZ-FD25/35/50	MAC-093SS-E	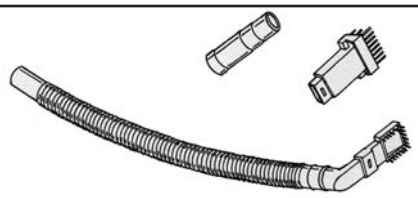

NOTE: Refer to the instructions described in the QUICK CLEAN KIT for details.

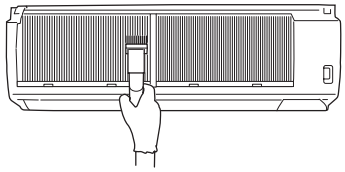

MITSUBISHI ELECTRIC CORPORATION
HEAD OFFICE: TOKYO BLDG., 2-7-3, MARUNOUCHI, CHIYODA-KU, TOKYO 100-8310, JAPAN

© Copyright 2007 MITSUBISHI ELECTRIC CO.,LTD
Distributed in Dec. 2008. No. OBB488 REVISED EDITION-C 5
Distributed in Jul. 2008. No. OBB488 REVISED EDITION-B 6
Distributed in Oct. 2007. No. OBB488 REVISED EDITION-A 6
Distributed in Aug. 2007. No. OBB488 6
Made in Japan

New publication, effective Dec. 2008
Specifications subject to change without notice.