Back to Index page

C.2 FLOOR AND CEILING

C.2.1 SPECIFICATIONS C-249
C.2.1.1 Cool Only C-249
C.2.1.2 Heat Pump C-250
C.2.1.3 Inverter Heat Pump C-251
C.2.2 OUTLINES AND DIMENSIONS C-252
C.2.2.1 Cool Only/Heat Pump/ Inverter Heat Pump C-252
C.2.3 WIRING DIAGRAM C-254
C.2.3.1 Cool Only C-254
C.2.3.2 Heat Pump C-256
C.2.3.3 Inverter Heat Pump C-258
C.2.4 REFRIGERANT SYSTEM DIAGRAM C-259
C.2.4.1 Cool Only C-259
C.2.4.2 Heat Pump C-261
C.2.4.3 Inverter Heat Pump C-263
C.2.5 PERFORMANCE CURVES C-264
C.2.5.1 Cool Only C-265
C.2.5.2 Heat Pump C-267
C.2.5.3 Inverter Heat Pump C-270
C.2.6 PERFORMANCE DATA C-273
C.2.6.1 Cool Only C-273
C.2.6.2 Heat Pump C-279
C.2.6.3 Inverter Heat Pump C-286
C.2.7 NOISE CRITERIA CURVES C-293
C.2.7.1 Cool Only C-293
C.2.7.2 Heat Pump C-295
C.2.7.3 Inverter Heat Pump C-297
C.2.8 REMOTE CONTROLLER OPERATION C-298
C.2.8.1 Cool Only C-298
C.2.8.2 Heat Pump C-299
C.2.8.3 Inverter Heat Pump C-300
C.2.9 TROUBLESHOOTING C-301
C.2.9.1 Cool Only C-301
C.2.9.2 Heat Pump C-301
C.2.9.3 Inverter Heat Pump C-302
C.2.10 INSTALLATION PROCEDURE C-303
C.2.10.1 Cool Only/Heat Pump C-303
C.2.10.2 Heat Pump C-311
C.2.10.3 Inverter Heat Pump C-319
C.2.11 MICROPROCESSOR CONTROL C-335
C.2.11.1 MCF-A·WV Series C-335
C.2.11.2 MCFH-A·WV Series C-341
C.2.11.3 MCFZ-A· WV Series C-350

C.2.1 SPECIFICATIONS

C.2.1.1 Cool Only

Indoor model			MCF-A12WV	MCF-A18WV	MCF-A24WV
Function			Cooling	Cooling	Cooling
Power supply			Single phase 230V, 50Hz	Single phase 230V, 50Hz	Single phase 230V, 50Hz
Capacity	Air flow (High/Med.※/Low※)	m³ /h	678 /582※ /474 ※	780 / 636※ / 492※	840/ 744※ / 642※
Electrical data	Power outlet	A	10		
	Running current	A	0.26	0.30	0.36
	Power input	W	56	66	80
	Auxiliary heater	A(kW)	—		
	Power factor	%	94	96	97
	Fan motor current	A	0.26	0.30	0.36
Fan motor	Model		RB4V19-AC	RB4V25-AC	RB4V36-DB
	Winding resistance(at 20℃)	Ω	WHT-BLK 203.2 BLK-YLW 45.9 YLW-BLU 32.7 BLU-BRN 44.4 BRN-RED 23.3	WHT-BLK 182.2 BLK-YLW 68.9 YLW-BLU 47.5 BLU-BRN 31.5 BRN-RED 22.9	WHT-BLK 84 BLK-YLW 46.2 YLW-BLU 37.2 BLU-BRN 45.2 BRN-RED 13.6
	Dimensions W×H×D	mm	1,100×650×180		
	Weight	kg	25		
Special remarks	Air direction		5		
	Sound level (High/Med.※/Low※)	dB	44 /40※ /34※	46 /41※ / 36※	48 /45※ / 42※
	Fan speed (High/Med.※/Low※)	rpm	1,105 /970※ / 820※	1,240 /1,060※ / 845※	1,320 /1,190※ / 1,060※
	Fan speed regulator		3		
	Thermistor RT11(at 25℃)	kΩ	10		
	Thermistor RT12(at 25℃)	kΩ	10		
Remote controller model			KG04D		
Outdoor model			MU-A12YV	MUCF-A18WV	MUCF-A24WV
Power supply			Single phase 230V, 50Hz	Single phase 230V, 50Hz	Single phase 230V, 50Hz
Capacity	Capacity	kW	3.5	4.8	6.0
	Dehumidification	ℓ /h	1.5	2.4	3.1
	Outdoor air flow(High)	m³ /h	1,914	2,196	2,322
Electrical data	Power outlet	A	10	15	25
	Running current	A	4.89	7.98	10.62
	Power input	W	1,104	1,744	2,370
	Auxiliary heater	A(kW)	—	—	—
	Power factor	%	98	95	97
	Starting current	A	29	37	74
	Compressor motor current	A	4.58	7.59	10.07
	Fan motor current	A	0.31	0.39	0.55
Coefficient of performance(C.O.P)			3.02	2.65	2.45
Compressor	Model		RN135VHSHT	RN196VHSHT	NN29VBAHT
	Output	W	900	1,300	1,900
	Winding resistance(at 20℃)	Ω	C-R 2.79 C-S 3.36	C-R 1.80 C-S 3.00	C-R 0.80 C-S 1.64
Fan motor	Model		RA6V33-FC	RA6V50-OG	RA6V60-MA
	Winding resistance(at 20℃)	Ω	WHT-BLK 223 BLK-RED 228	WHT-BLK 116 BLK-RED 111	WHT-BLK 71 BLK-RED 89
	Dimensions W×H×D	mm	780×540×255	850×605×290	850×605×290
	Weight	kg	36	44	60
Special remarks	Sound level(High)	dB	49	52	53
	Fan speed(High)	rpm	825	825	873
	Fan speed regulator		1	1	1
	Refrigerant filling capacity (R410A)	kg	0.75	1.45	1.85
	Refrigerating oil (Model)	cc	620 (NEO22)	520 (NEO22)	1,200 (NEO22)

NOTE:Test conditions are based on ISO 5151.

Cooling : Indoor DB27°C WB19°C

Outdoor DB35°C WB(24°C)

Indoor-Outdoor piping length : 5m

※ Reference value

C.2.1.2 Heat Pump

Indoor model			MCFH-A12WV		MCFH-A18WV		MCFH-A24WV	
Function			Cooling	Heating	Cooling	Heating	Cooling	Heating
Power supply			Single phase 230V, 50Hz					
Capacity	Air flow(High/Med.※/Low※)	m³ /h	780/636※/492※		840/696※/570※		840/744※/642※	
Electrical data	Power outlet	A	10		10		10	
	Running current	A	0.30		0.36		0.36	
	Power input	W	66		80		80	
	Auxiliary heater	A(kW)	—	—	—	—	—	—
	Power factor	%	96		97		97	
	Fan motor current	A	0.30		0.36		0.36	
Fan motor	Model		RB4V25-AC		RB4V36-AC		RB4V36-DB	
	Winding resistance(at20℃)	Ω	WHT-BLK 182.2 BLK-YLW 68.9 YLW-BLU 47.5 BLU-BRN 31.5 BRN-RED 22.9		WHT-BLK 82.9 BLK-YLW 65.6 YLW-BLU 36.0 BLU-BRN 27.0 BRN-RED 13.7		WHT-BLK 84.0 BLK-YLW 46.2 YLW-BLU 37.2 BLU-BRN 45.2 BRN-RED 13.6	
Dimensions W×H×D		mm	1100 X 650 X 180					
Weight		kg	25		25		25	
Special remarks	Air direction		5		5		5	
	Sound level(High/Med.※/Low※)	dB	46/41※/36※		48/44※/39※		48/45※/42※	
	Fan speed(High/Med.※/Low※)	rpm	1,240/1,060/845		1,320/1,145/960		1,320/1,190/1,060	
	Fan speed regulator		3		3		3	
	Thermistor RT11(at25℃)	kΩ	10		10		10	
	Thermistor RT12(at25℃)	kΩ	10		10		10	
	Remote controller model		KG04C		KG04C		KG04C	
Outdoor model			MUH-A12YV		MUCFH-A18WV		MUCFH-A24WV	
Power supply			Single phase 230V, 50Hz					
Capacity	Capacity	kW	3.5	3.7	4.8	5.0	6.0	6.8
	Dehumidification	ℓ /h	1.5	—	2.4	—	3.1	—
	Outdoor air flow(High)	m³ /h	1,710		2,196		2,760	
Electrical data	Power outlet	A	10		15		25	
	Running current	A	4.85	4.23	8.01	8.38	10.51	11.71
	Power input	W	1,094	954	1,730	1,810	2,370	2,640
	Auxiliary heater	A(kW)	—		—		—	
	Power factor	%	98	98	94	94	98	98
	Starting current	A	29		37		74	
	Compressor motor current	A	4.54	3.92	7.62	7.99	9.93	11.13
	Fan motor current	A	0.31		0.39		0.58	
Coefficient of performance (C.O.P)			3.02	3.63	2.65	2.65	2.45	2.50
Compressor	Model		RN135VHSHT		RN196VHSHT		NN29VBAHT	
	Output	W	900		1,300		1,900	
	Winding resistance (at 20℃)	Ω	C-R 2.79 C-S 3.36		C-R 1.80 C-S 3.00		C-R 0.80 C-S 1.64	
Fan motor	Model		RA6V33-FB		RA6V50-OG		RA6V85-AB	
	Winding resistance (at 20℃)	Ω	WHT-BLK 223 BLK-RED 228		WHT-BLK 116 BLK-RED 111		WHT-BLK 63 BLK-YLW 30 YLW-RED 63	
Dimensions W×H×D		mm	780×540×255		850×605×290		840×850×330	
Weight		kg	40		47		74	
Special remarks	Sound level(High)	dB	49		52		53	
	Fan speed(High)	rpm	825		828		730	
	Fan speed regulator		1		1		1	
	Refrigerant filling capacity (R410A)	kg	1.00		1.85		2.20	
	Refrigerating oil (Model)	cc	620 (NEO22)		520 (NEO22)		1,200 (NEO22)	
	Thermistor RT61 (at 0℃)	kΩ	33.18		33.18		33.18	

NOTE: Test conditions are based on ISO 5151

Cooling : Indoor DB27°C WB19°C Heating : Indoor DB20°C WB 15°C

Outdoor DB35°C WB(24°C) Outdoor DB 7°C WB 6°C

Indoor-Outdoor piping length : 5 m

※ Reference value

C.2.1.3 Inveter Heat Pump

Indoor model			MCFZ-A12WV		MCFZ-A18WV		MCFZ-A24WV	
Function			Cooling	Heating	Cooling	Heating	Cooling	Heating
Power supply			Single phase 230V, 50Hz		Single phase 230V, 50Hz		Single phase 230V, 50Hz	
Capacity	Air flow(High/Med.※/Low※)	m³ /h	780/636※/492※		840/696※/570※		840/744※/642※	
Electrical data	Power outlet	A	10		10		10	
	Running current ✻1	A	0.30		0.36		0.36	
	Power input ✻1	W	66		80		80	
	Auxiliary heater	A(kW)	—	—	—	—	—	—
	Power factor ✻1	%	96		97		97	
	Fan motor current ✻1	A	0.30		0.36		0.36	
Fan motor	Model		RB4V25-AC		RB4V36-AC		RB4V36-DB	
	Winding resistance(at 20℃)	Ω	WHT-BLK 182.2 BLK-YLW 68.9 YLW-BLU 47.5 BLU-BRN 31.5 BRN-RED 22.9		WHT-BLK 82.9 BLK-YLW 65.6 YLW-BLU 36.0 BLU-BRN 27.0 BRN-RED 13.7		WHT-BLK 84.0 BLK-YLW 46.2 YLW-BLU 37.2 BLU-BRN 45.2 BRN-RED 13.6	
	Dimensions W×H×D	mm	1,100 × 650 × 180		1,100 × 650 × 180		1,100 × 650 × 180	
	Weight	kg	25		25		25	
Special remarks	Air direction		5		5		5	
	Sound level(High/Med.※/Low※)	dB	46/41※/35※		48/44※/39※		48/45※/42※	
	Fan speed(High/Med.※/Low※)	rpm	1,240/1,060※/845※		1,320/1,145/960		1,320/1,190/1,060	
	Fan speed regulator		3		3		3	
	Thermistor RT11(at 25℃)	kΩ	10		10		10	
	Thermistor RT12(at 25℃)	kΩ	10		10		10	
	Remote controller model		KG04B		KG04C		KG04C	
Outdoor model			MUZ-A12YV MUZ-A12YVH		MUZ-A18YV		MUZ-A24YV	
Power supply			—		Single phase 230V,50Hz		Single phase 230V,50Hz	
Capacity	Capacity Rated frequency(Min.~Max.)	kW	3.5 (1.0-4.1)	3.9 (0.9-5.9)	4.8(10.9~5.5)	6.0(0.9~7.5)	5.5(0.9~6.1)	6.4(0.9~7.9)
	Dehumidification	ℓ /h	2.0	—	2.4	—	3.1	—
	Air flow	m³ /h	1900		2,940/1,650※	2,940/2,210※	2,940/1,650※	2,940/2,210※
Electrical data	Power outlet	A	—		20		20	
	Running current	A	—		7.76	8.87	10.38	10.47
	Power input	W	—		1,750	2,000	2,340	2,360
	Power factory	%	—		98		98	
	Starting current ✻1	A	5.00		8.87		10.47	
	Compressor motor current ✻1	A	4.46		7.46	8.57	10.08	10.17
	Fan motor current	A	0.24		0.30		0.30	
Coefficint of performance(C.O.P) ✻1			3.21	3.61	2.62	2.88	2.27	2.62
Compressor	Model		KNB092FAAH		SNB130FLDH		SNB130FLDH	
	Output	W	650		850		850	
	Winding resistance(at 20℃)	Ω	U-V 0.49 U-W 0.49 V-W 0.49		U-V 0.45 W-U 0.45 V-W 0.45		U-V 0.45 W-U 0.45 V-W 0.45	
Fan motor	Model		RA6V21-AA		PM8H60-UB		PM8H60-UB	
	Winding resistance(at 20℃)	Ω	WHT-BLK 347 BLK-RED 281		BLK-WHT 15.2 WHT-RED 15.2 RED-BLK15.2		BLK-WHT 15.2 WHT-RED 15.2 RED-BLK15.2	
	Dimensions W×H×D	mm	800×550×285		840×850×330		840×850×330	
	Weight	kg	34		53		53	
Special remarks	Sound level	dB(A)	47	48	53/51※	55/53※	53/51※	55/53※
	Fan speed	rpm	825		800/480※	800/620※	800/480※	800/620※
	Fan speed regulator		1		2		2	
	Refrigerant filling capacity(R410A)	kg	0.90		1.8		1.8	
	Refrigerating oil (Model)	cc	320 (NEO22)		450 (NEO22)		450 (NEO22)	
	Thermistor RT61(at 0℃)	kΩ	32.6		13.4		13.4	
	Thermistor RT62(at 100℃)	kΩ	13.4		10.0		10.0	
	Thermistor RT64(at 50℃)	kΩ	17		—		—	
	Thermistor RT65(at 25℃)	kΩ	10		17.0		17.0	
	Thermistor RT68(at 25℃)	kΩ	—		10.0		10.0	

NOTE: Test conditions are based on ISO 5151
Cooling : Indoor Dry-bulb temperature 27°C Wet-bulb temperature 19°C
Outdoor Dry-bulb temperature 35°C Wet-bulb temperature (24°C)
Heating : Indoor Dry-bulb temperature 20°C Wet-bulb temperature 15°C
Outdoor Dry-bulb temperature 7°C Wet-bulb temperature 6°C
Indoor-Outdoor piping length (one way) : 5 m
※ Reference value
✻1 Measured under rated operating frequency.

C.2.2 OUTLINES AND DIMENSIONS

C.2.2.1 Cool Only/Heat Pump/Inverter Heat Pump

MCF-A12WV MCFH-A12WV MCFZ-A12WV
MCF-A18WV MCFH-A18WV MCFZ-A18WV
MCF-A24WV MCFH-A24WV MCFZ-A24WV

Unit: mm

INDOOR UNIT

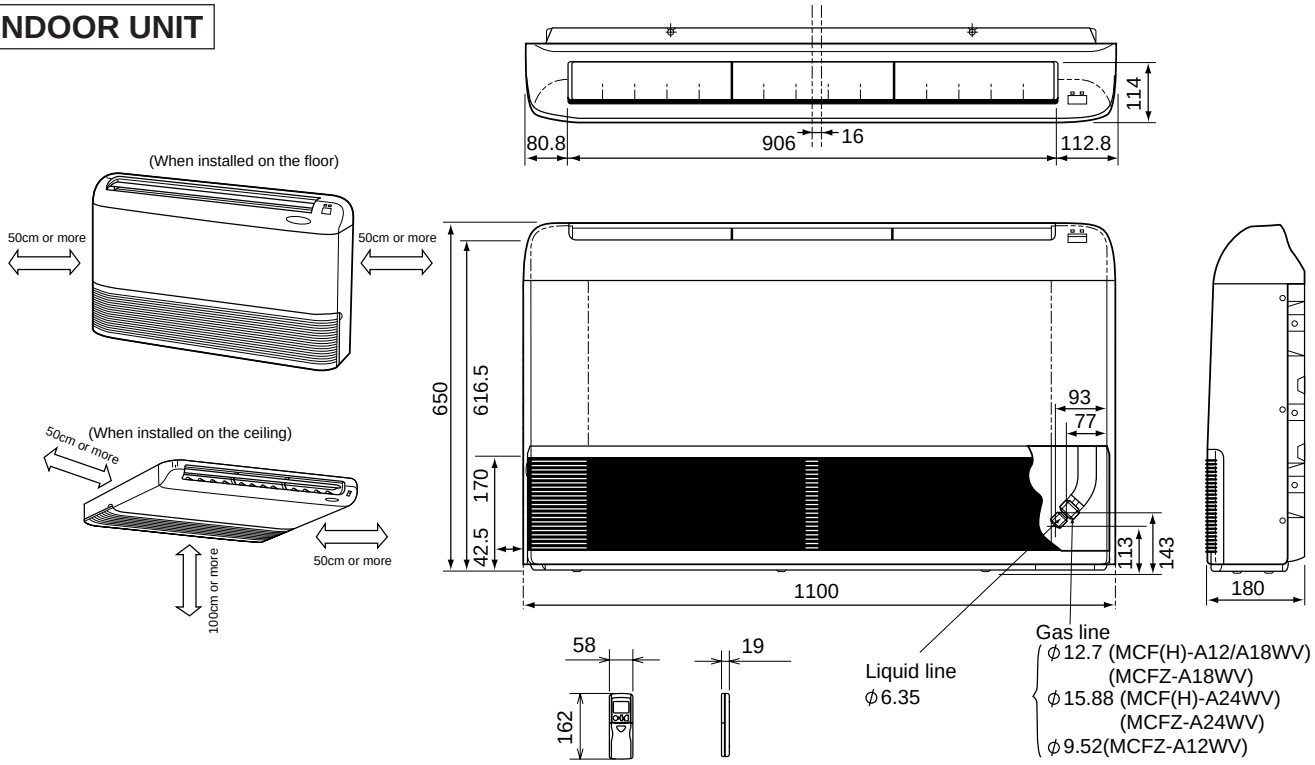

Wireless remote controller

MUCF-A18WV MUCFH-A18WV MUCF-A24WV

Unit: mm

OUTDOOR UNIT

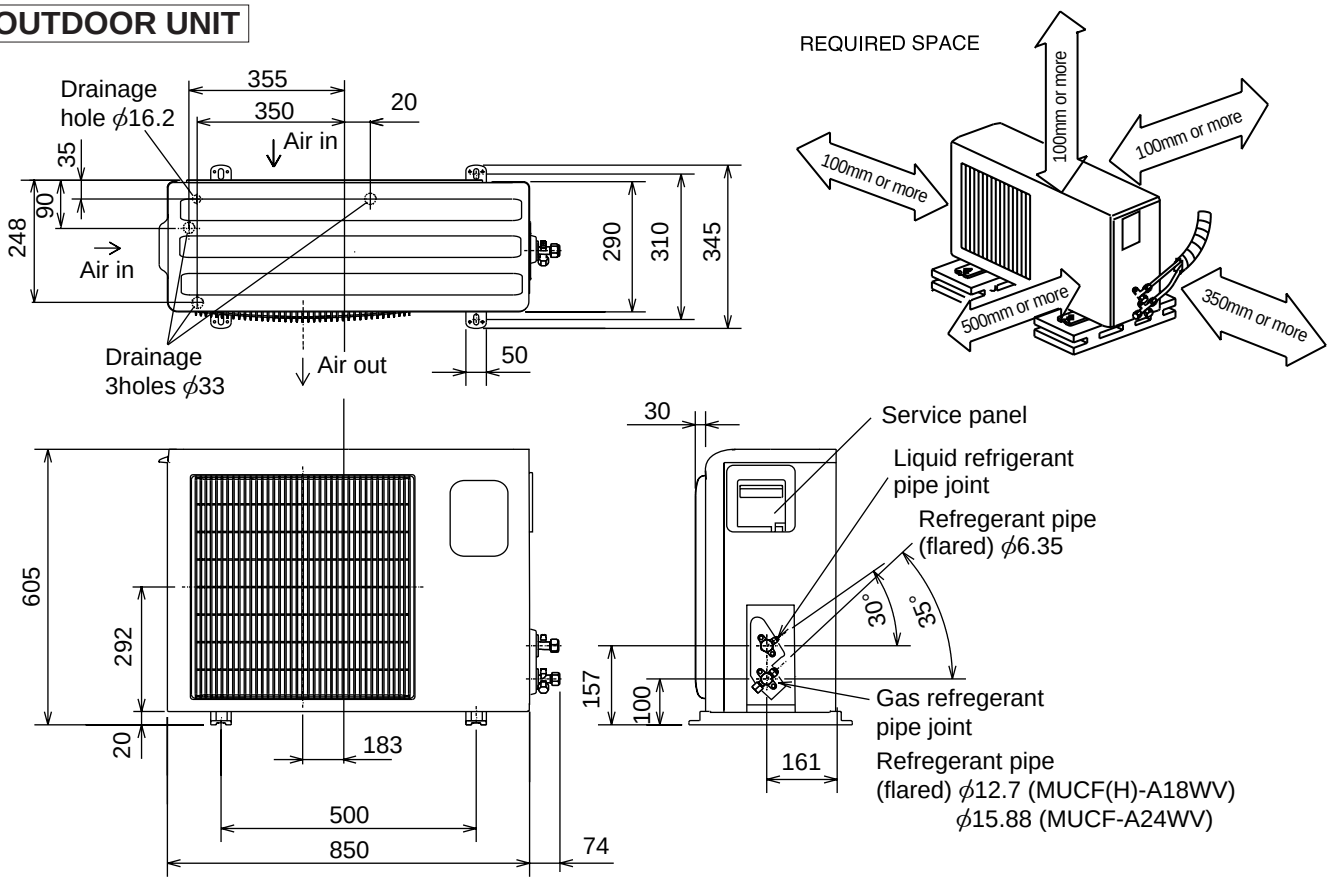

OUTDOOR UNIT
MUCFH-A24WV

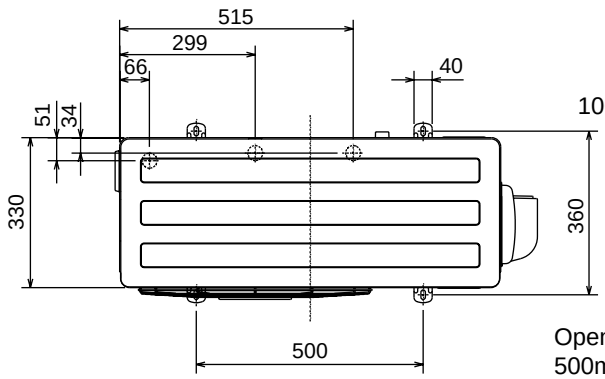

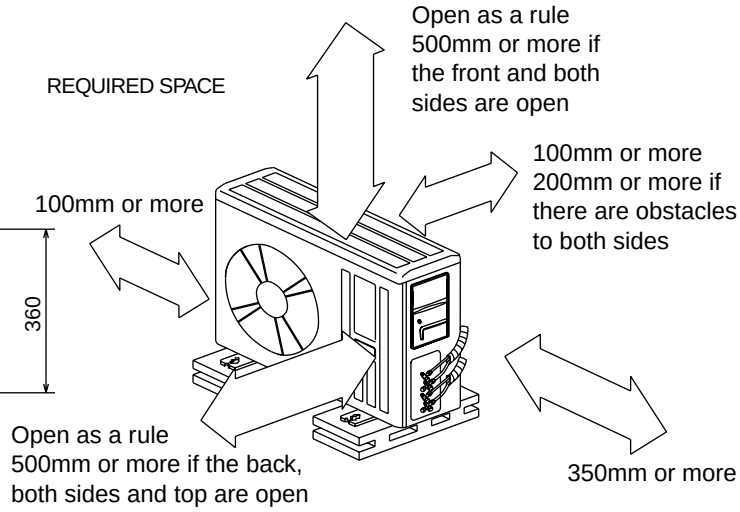

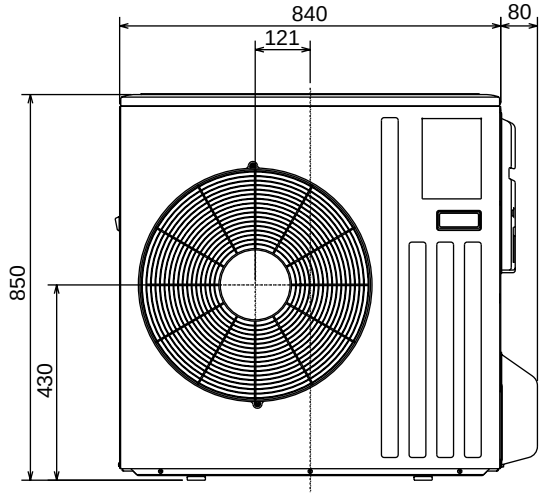

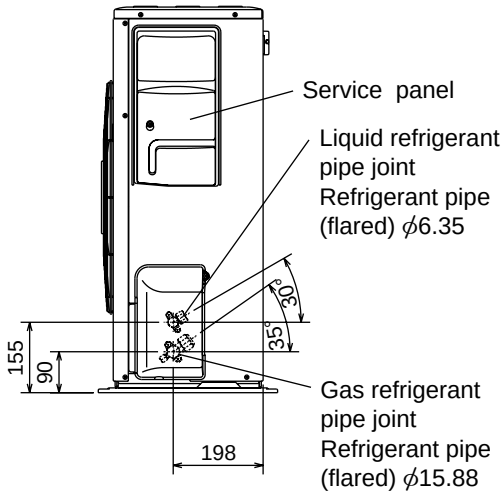

Refer to C-17 for MU-A12YV.
Refer to C-22 for MUH-A12YV.
Refer to C-24 for MUZ-A12YV(H).
Refer to C-26 for MUZ-A18YV.
Refer to C-26 for MUZ-A24YV.

C.2.3 WIRING DIAGRAM

C.2.3.1 Cool Only

MCF-A12WV MCF-A18WV MCF-A24WV

INDOOR UNIT

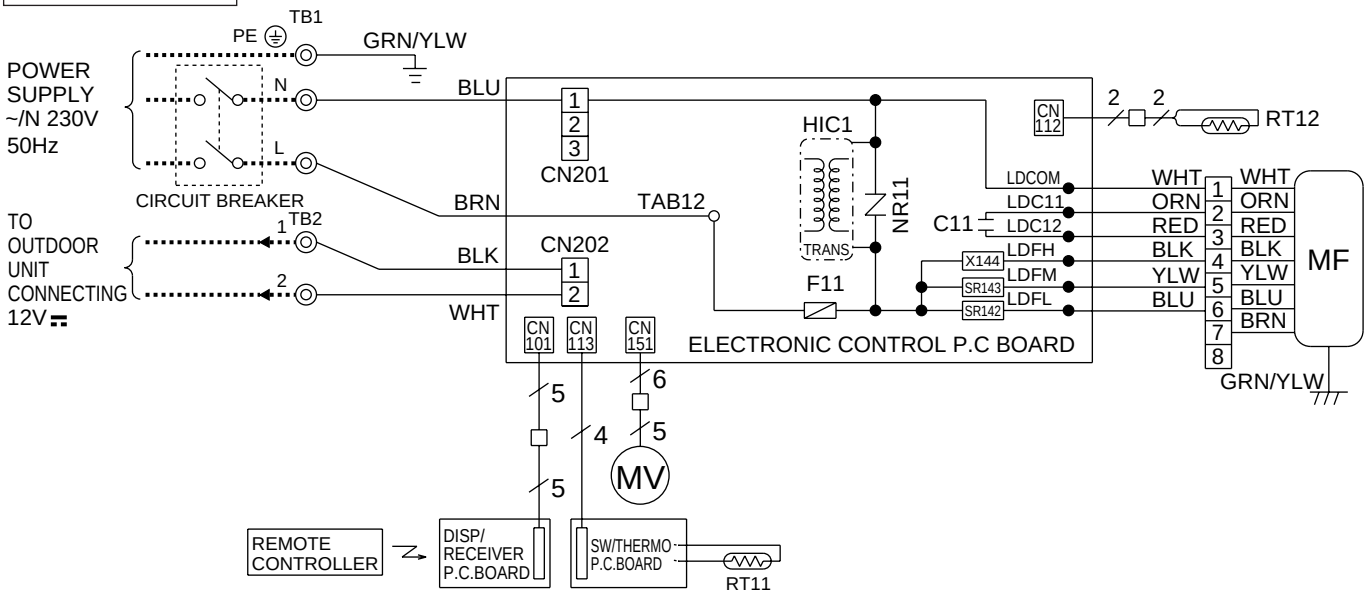

SYMBOL	NAME	SYMBOL	NAME	SYMBOL	NAME
C11	INDOOR FAN CAPACITOR	MV	VANE MOTOR	SR142~SR143	SOLID STATE RELAY
F11	FUSE (3.15A)	NR11	VARISTOR	TB1, TB2	TERMINAL BLOCK
HIC1	DC/DC CONVERTER	RT11	ROOM TEMPERATURE THERMISTOR	X144	RELAY
MF	INDOOR FAN MOTOR(INNER FUSE)	RT12	INDOOR COIL THERMISTOR		

NOTE:1. About the outdoor side electric wiring, refer to the outdoor unit electric wiring diagram for servicing.
2. Use copper conductors only.(For field wiring)
3. Symbols below indicate;
◎: Terminal block, □□□□: Connector

MU-A12YV

OUTDOOR UNIT

Refer to C-31 for MU-A12YV.

MUCF-A18WV

OUTDOOR UNIT

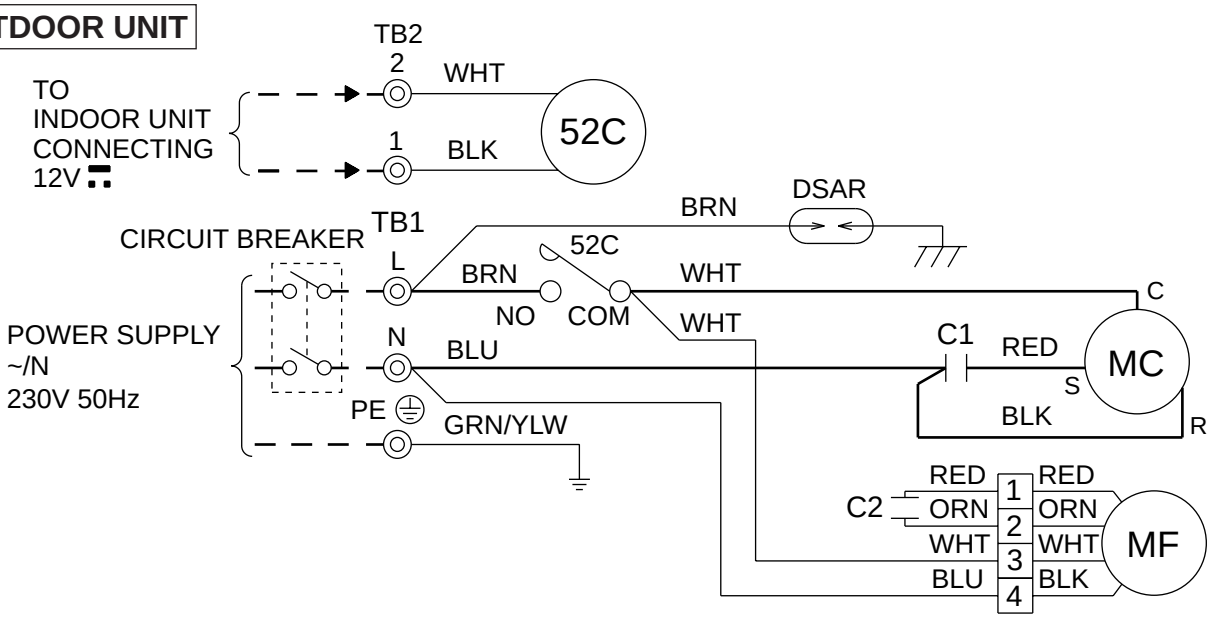

SYMBOL	NAME	SYMBOL	NAME	SYMBOL	NAME
C1	COMPRESSOR CAPACITOR	MC	COMPRESOR (INNER PROTECTOR)	52C	COMPRESSOR CONTACTOR
C2	OUTDOOR FAN CAPACITOR	MF	OUTDOOR FAN MOTOR (INNER PROTECTOR)		
DSAR	SURGE ABSORBER	TB1,TB2	TERMINAL BLOCK		

NOTES: 1.About the indoor side electric wiring refer to the indoor unit electric wiring diagram for servicing.
2.Use copper conductors only. (For field wiring)
3.Symbols below indicate.
◎ : Terminal block ▭▭▭ : Connector

MUCF-A24WV

OUTDOOR UNIT

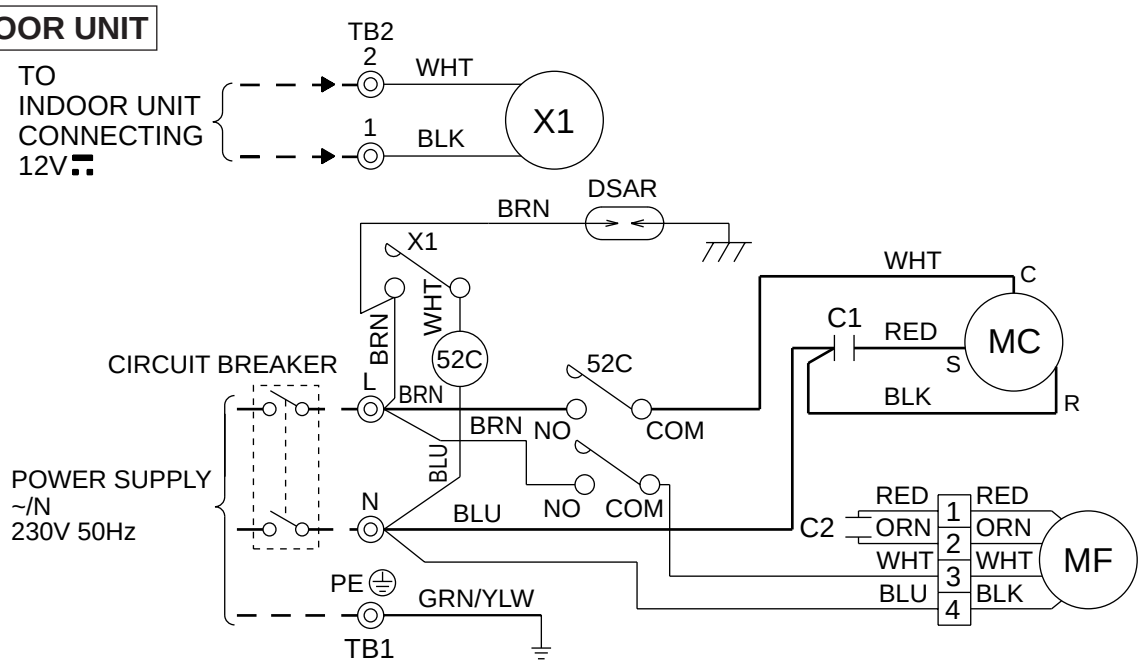

SYMBOL	NAME	SYMBOL	NAME	SYMBOL	NAME
C1	COMPRESSOR CAPACITOR	MC	COMPRESSOR (INNER PROTECTOR)	X1	RELAY
C2	OUTDOOR FAN CAPACITOR	MF	OUTDOOR FAN MOTOR (INNER PROTECTOR)	52C	COMPRESSOR CONTACTOR
DSAR	SURGE ABSORBER	TB1,TB2	TERMINAL BLOCK		

NOTES: 1.About the indoor side electric wiring refer to the indoor unit electric wiring diagram for servicing.
2.Use copper conductors only. (For field wiring)
3.Symbols below indicate.
◎ : Terminal block ▭▭▭ : Connector

C.2.3.2 Heat Pump

MCFH-A12WV
MCFH-A18WV
MCFH-A24WV

INDOOR UNIT

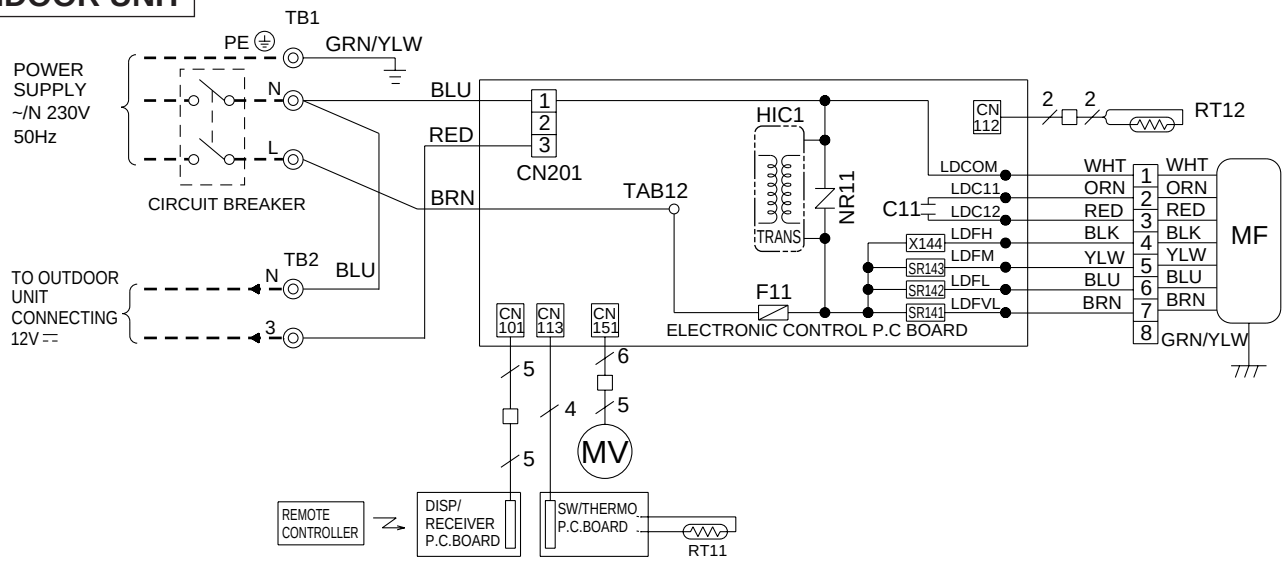

SYMBOL	NAME	SYMBOL	NAME	SYMBOL	NAME
C11	INDOOR FAN CAPACITOR	MV	VANE MOTOR	SR141~SR143	SOLID STATE RELAY
F11	FUSE (3.15A)	NR11	VARISTOR	TB1, TB2	TERMINAL BLOCK
HIC1	DC/DC CONVERTER	RT11	ROOM TEMPERATURE THERMISTOR	X144	RELAY
MF	INDOOR FAN MOTOR(INNER FUSE)	RT12	INDOOR COIL THERMISTOR		

NOTES: 1.About the outdoor side electric wiring refer to the outdoor unit electric wiring diagram for servicing.
2.Use copper conductors only. (For field wiring)
3.Symbols below indicate.
◎ : Terminal block ▭▭▭ : Connector

MUH-A12YV

OUTDOOR UNIT

Refer to C-36 for MUH-A12YV.

MUCFH-A18WV

OUTDOOR UNIT

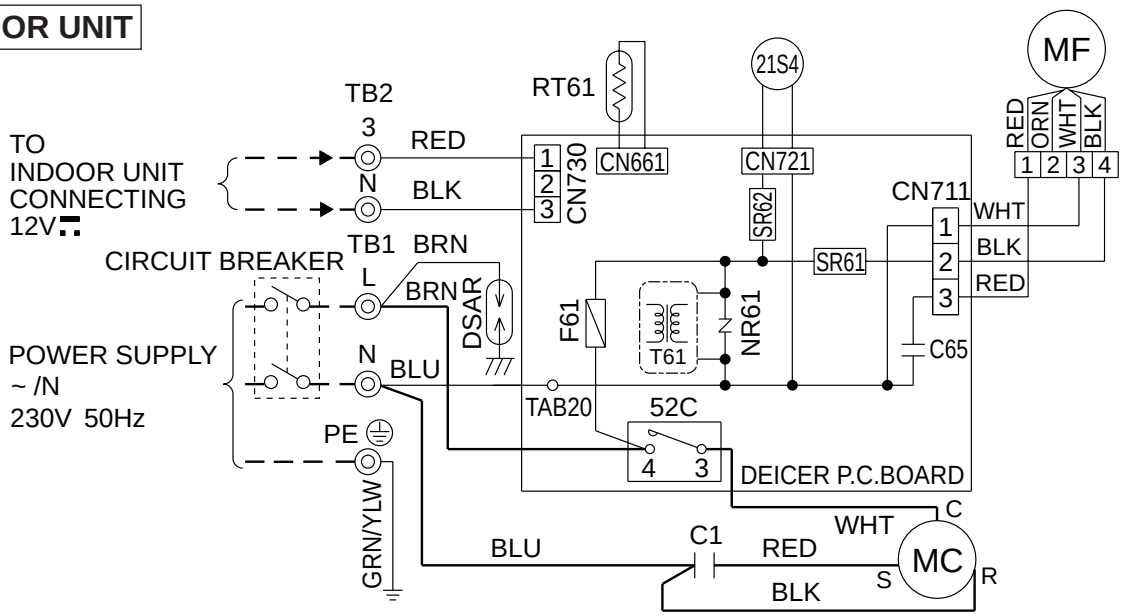

SYMBOL	NAME	SYMBOL	NAME	SYMBOL	NAME
C1	COMPRESSOR CAPACITOR	MF	OUTDOOR FAN MOTOR (INNER PROTECTOR)	TB1,TB2	TERMINAL BLOCK
C65	OUTDOOR FAN CAPACITOR	NR61	VARISTOR	21S4	R.V. COIL
DSAR	SURGE ABSORBER	RT61	DEFROST THERMISTOR	52C	COMPRESSOR CONTACTOR
F61	FUSE (2A)	SR61,SR62	SOLID STATE RELAY		
MC	COMPRESOR (INNER PROTECTOR)	T61	TRANSFORMER		

NOTES: 1.About the indoor side electric wiring refer to the indoor unit electric wiring diagram for servicing.
2.Use copper conductors only. (For field wiring)
3.Symbols below indicate.
◎ : Terminal block ▭▭▭ : Connector

MUCFH-A24WV

OUTDOOR UNIT

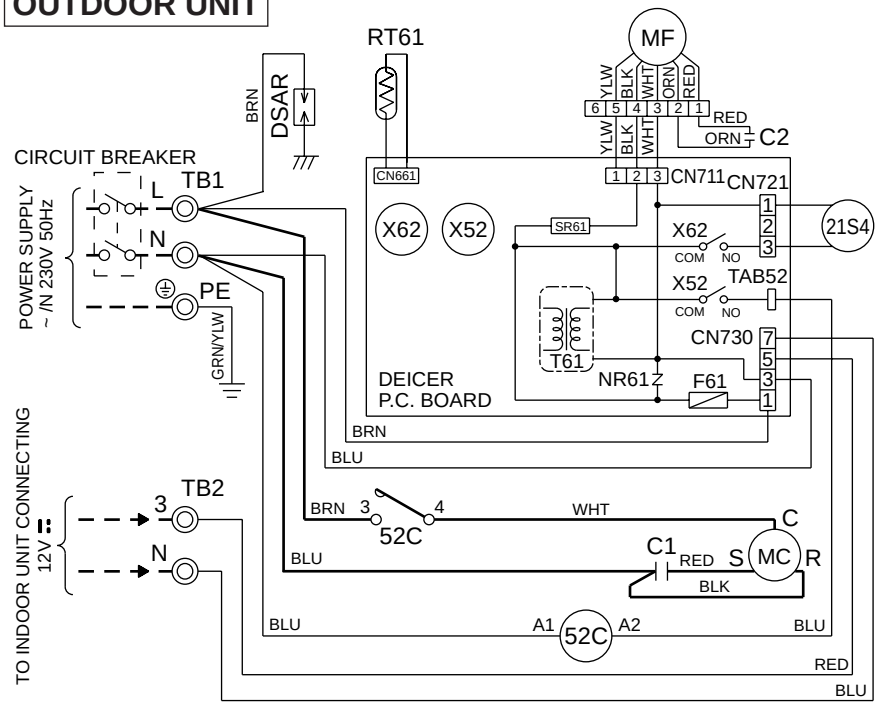

SYMBOL	NAME
C1	COMPRESSOR CAPACITOR
C2	OUTDOOR FAN CAPACITOR
DSAR	SURGE ABSORBER
F61	FUSE (3.15A)
MC	COMPRESSOR (INNER PROTECTOR)
MF	OUTDOOR FAN MOTOR (INNER PROTECTOR)
NR61	VARISTOR
RT61	DEFROST THERMISTOR
SR61	SOLID STATE RELAY
TB1	TERMINAL BLOCK
TB2	TERMINAL BLOCK
T61	TRANSFORMER
X52	CONTACTOR
X62	R. V. COIL RELAY
21S4	R. V. COIL
52C	COMPRESSOR CONTACTOR

NOTES: 1.Use copper conductors only (For field wiring).
2.Since the indoor and outdoor unit connecting wires have polarity, connect them according to the numbers (3,N).
3.Symbols below indicate.
◎: Terminal block, ▭▭▭ : Connector

C.2.3.3 Inverter Heat Pump

MCFZ-A12WV

INDOOR UNIT

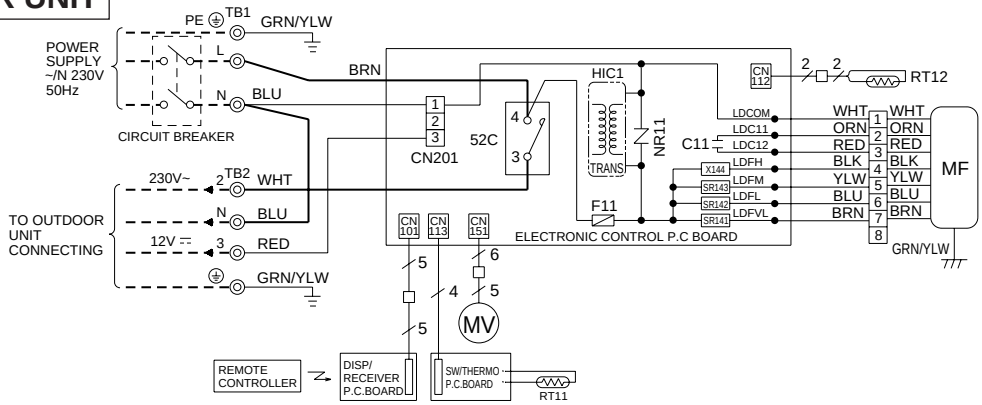

SYMBOL	NAME	SYMBOL	NAME	SYMBOL	NAME
C11	INDOOR FAN CAPACITOR	MV	VANE MOTOR	SR141~SR143	SOLID STATE RELAY
F11	FUSE (3.15A)	NR11	VARISTOR	TB1, TB2	TERMINAL BLOCK
HIC1	DC/DC CONVERTER	RT11	ROOM TEMPERATURE THERMISTOR	X144	RELAY
MF	INDOOR FAN MOTOR(INNER FUSE)	RT12	INDOOR COIL THERMISTOR	52C	COMPRESSOR CONTACTOR

NOTES: 1.About the outdoor side electric wiring refer to the outdoor unit electric wiring diagram for servicing.
2.Use copper conductors only. (For field wiring)
3.Symbols below indicate.
◎ : Terminal block ▭▭ : Connector

MCFZ-A18WV
MCFZ-A24WV

INDOOR UNIT

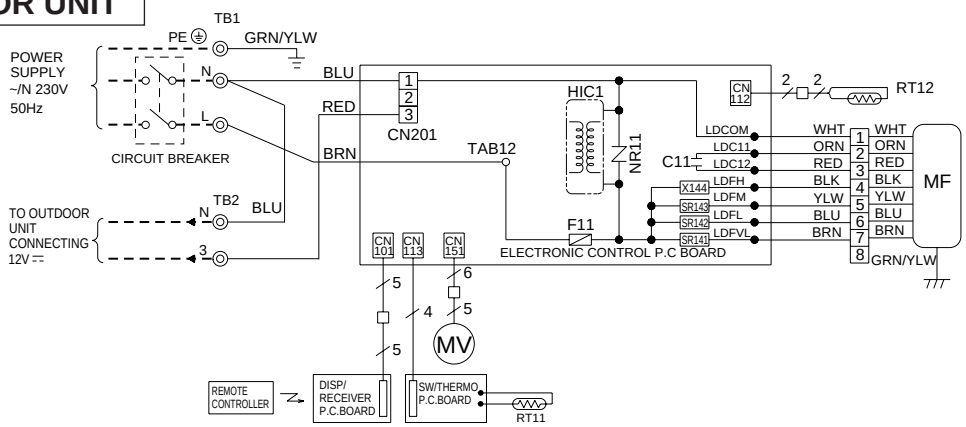

SYMBOL	NAME	SYMBOL	NAME	SYMBOL	NAME
C11	INDOOR FAN CAPACITOR	MV	VANE MOTOR	SR141~SR143	SOLID STATE RELAY
F11	FUSE (3.15A)	NR11	VARISTOR	TB1, TB2	TERMINAL BLOCK
HIC1	DC/DC CONVERTER	RT11	ROOM TEMPERATURE THERMISTOR	X144	RELAY
MF	INDOOR FAN MOTOR(INNER FUSE)	RT12	INDOOR COIL THERMISTOR		

NOTES: 1.About the outdoor side electric wiring refer to the outdoor unit electric wiring diagram for servicing.
2.Use copper conductors only. (For field wiring)
3.Symbols below indicate.
◎ : Terminal block ▭▭ : Connector

MUZ-A12YV(H)
MUZ-A18YV
MUZ-A24YV

Refer to C-38 for MUZ-A12YV and C-39 for MUZ-A12YVH.

Refer to C-41 for MUZ-A18YV.

Refer to C-41 for MUZ-A24YV.

C.2.4 REFRIGERANT SYSTEM DIAGRAM

C.2.4.1 Cool Only

Unit:mm

MCF-A12WV

MU-A12YV

INDOOR UNIT

OUTDOOR UNIT

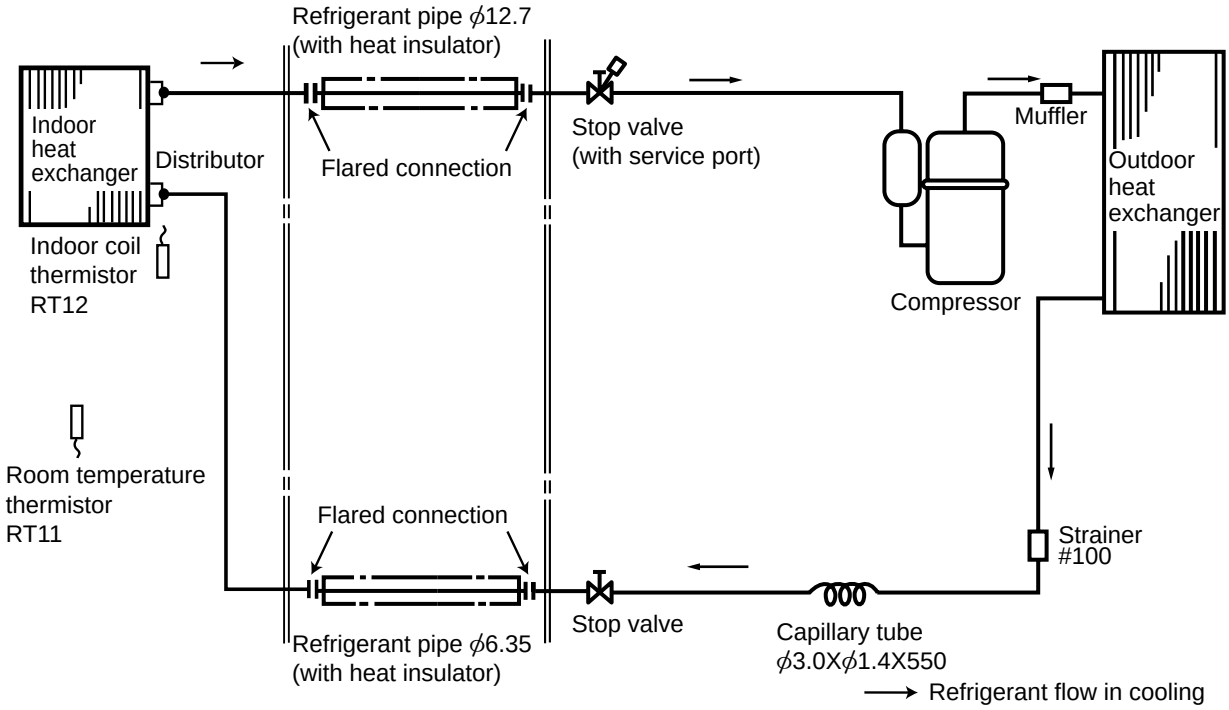

Unit:mm

MCF-A18WV **MUCF-A18WV**

INDOOR UNIT **OUTDOOR UNIT**

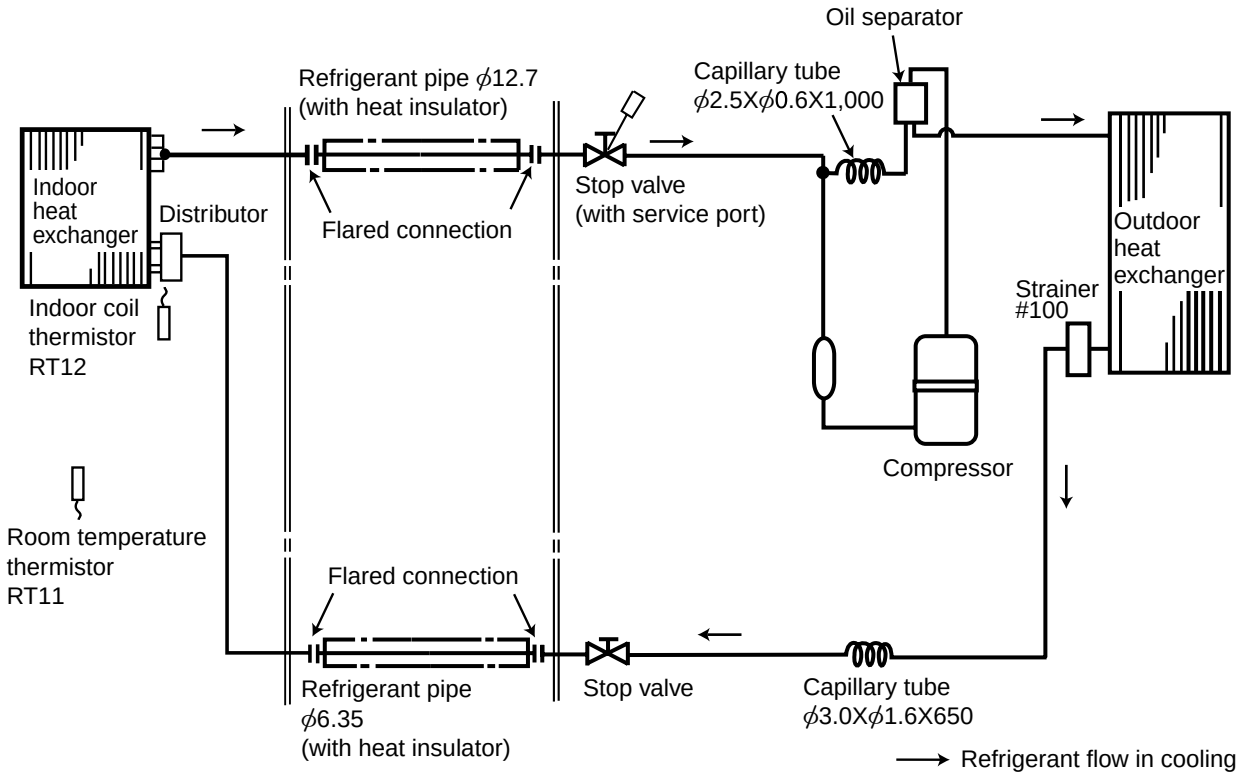

MCF-A24WV **MUCF-A24WV**

INDOOR UNIT **OUTDOOR UNIT**

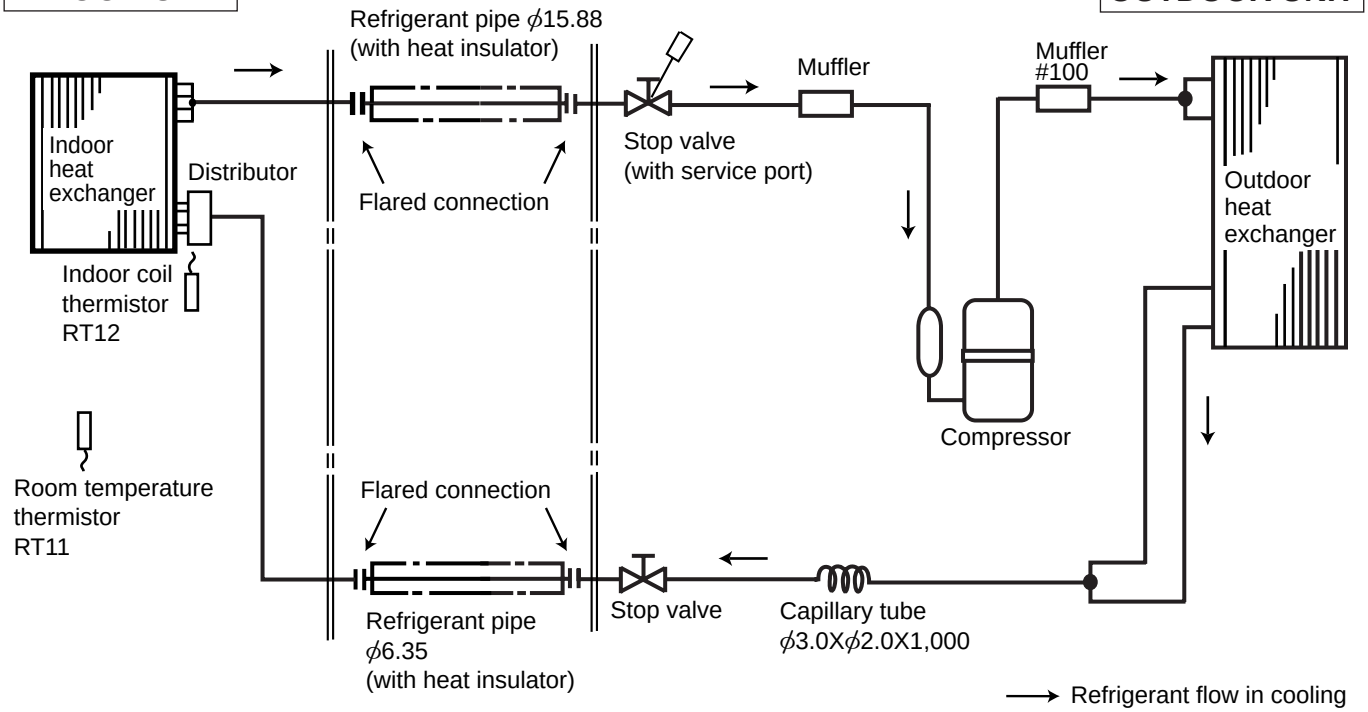

C.2.4.2 Heat Pump

Unit:mm

MCFH-A12WV **MUH-A12YV**

INDOOR UNIT **OUTDOOR UNIT**

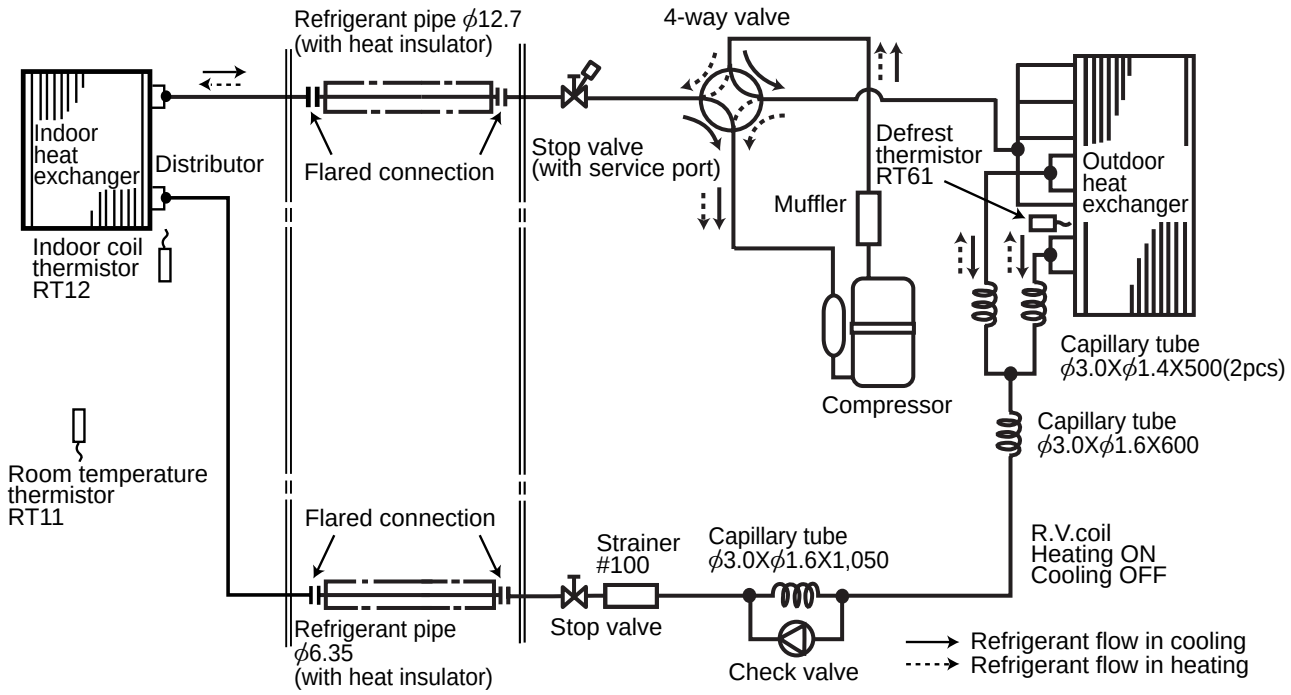

Unit:mm

MCFH-A18WV **MUCFH-A18WV**

INDOOR UNIT **OUTDOOR UNIT**

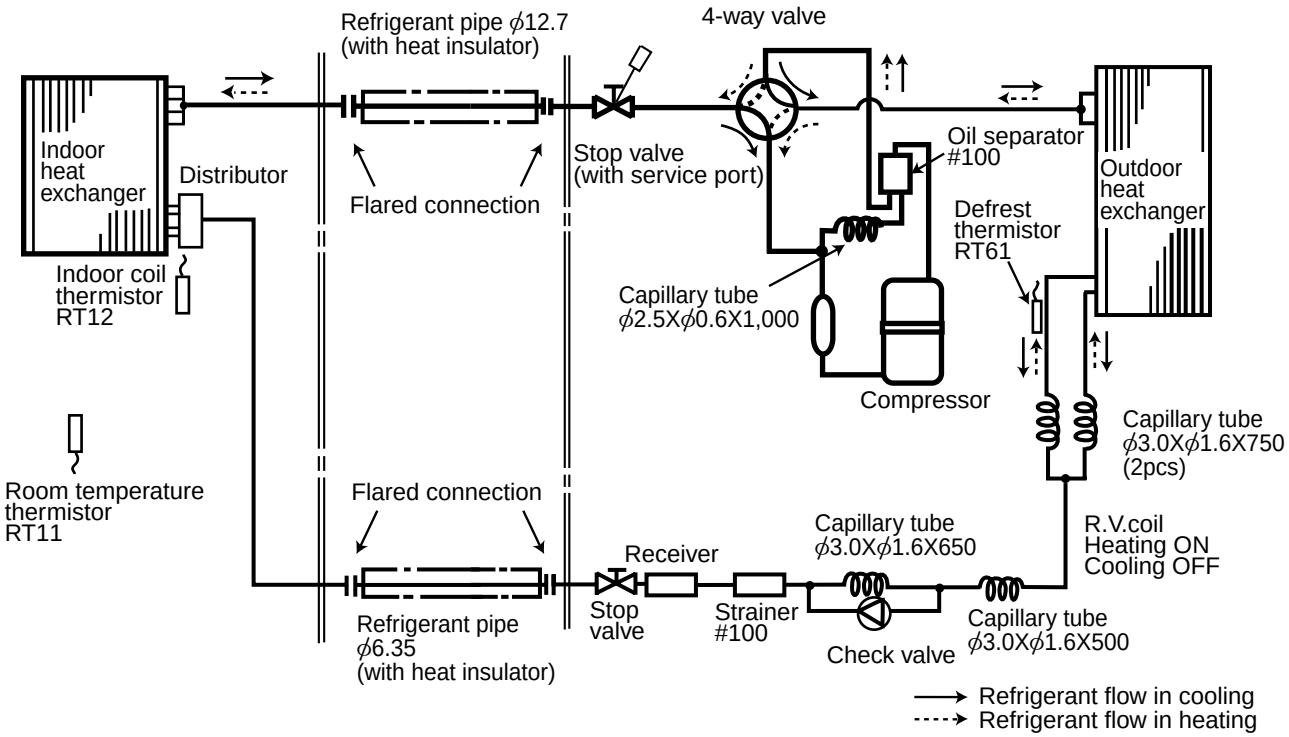

MCFH-A24WV **MUCFH-A24WV**

INDOOR UNIT **OUTDOOR UNIT**

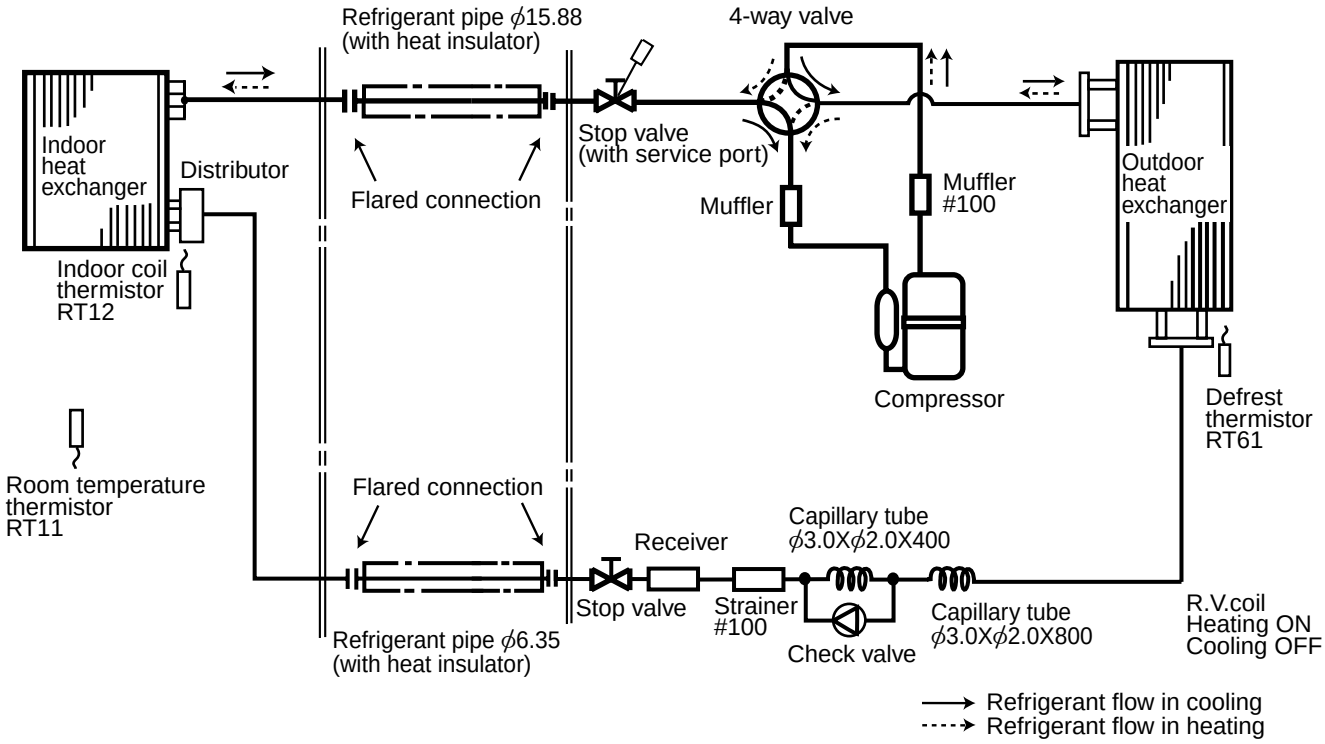

C.2.4.3 Inverter Heat Pump

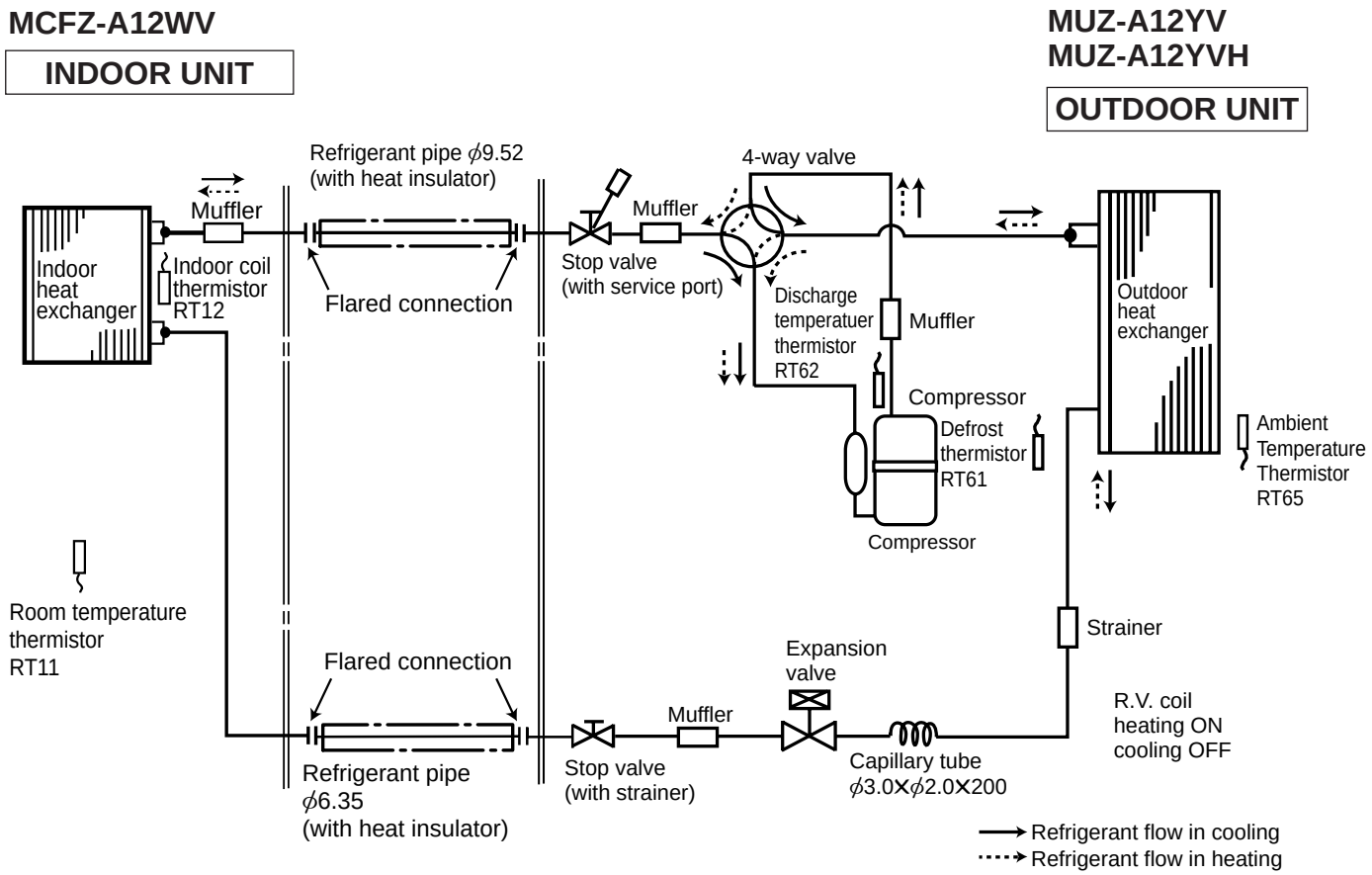

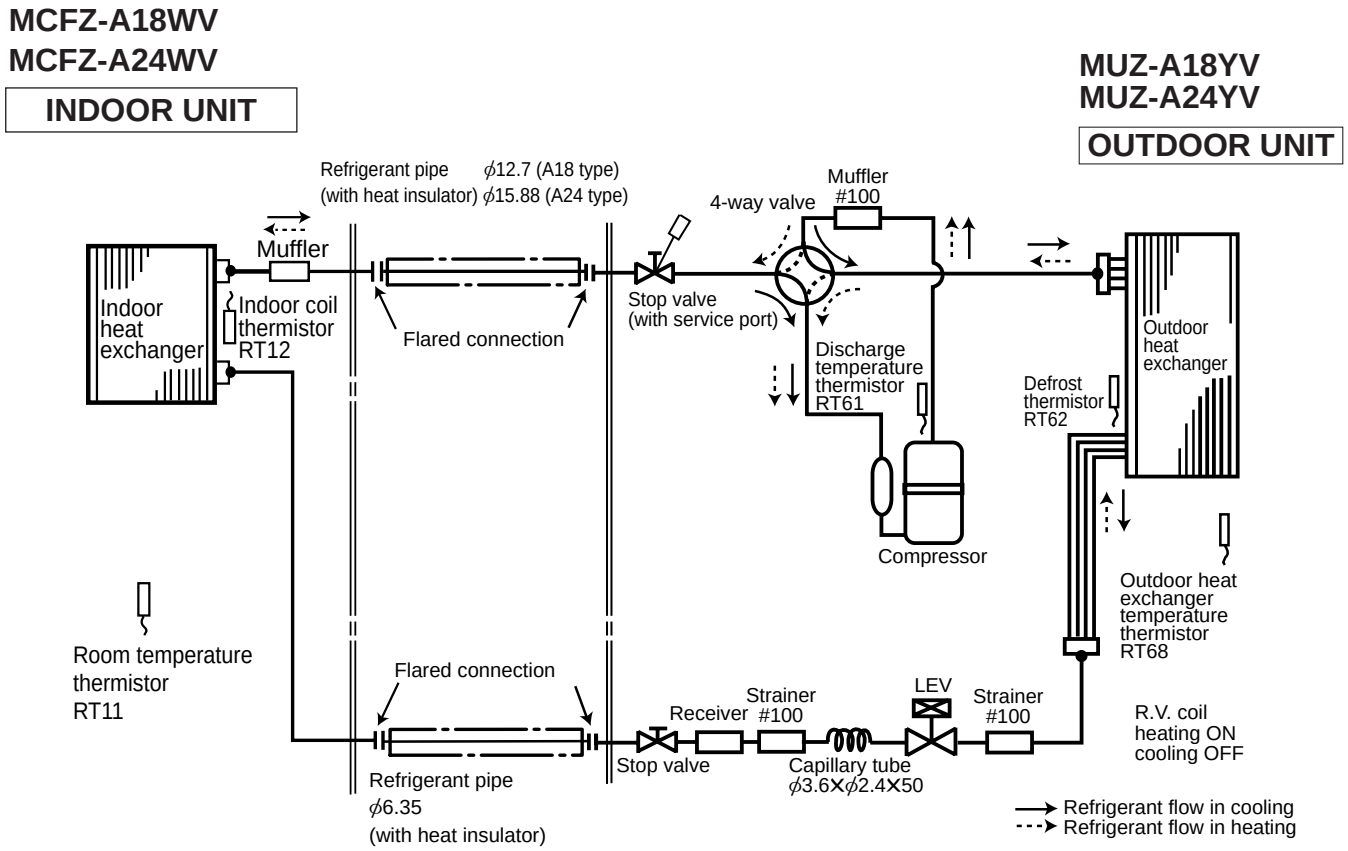

C.2.5 PERFORMANCE CURVES

The standard data contained in these specifications apply only to the operation of the air conditioner under normal condition. Operating conditions vary according to the areas where these units are installed. The following information has been provided to clarify the operating characteristics of the air conditioner under the conditions indicated by the performance curve.

(1) GUARANTEED VOLTAGE

198~264V, 50Hz

(2) AIR FLOW

Air flow should be set at MAX.

(3) MAIN READINGS

COOLING

(1) Indoor intake air wet-bulb temperature : ˚CWB

(2) Indoor outlet air wet-bulb temperature : ˚CWB

(3) Outdoor intake air dry-bulb temperature : ˚CDB

(4) Total input : W

HEATING

(1) Indoor intake air dry-bulb temperature : ˚CDB

(2) Indoor outlet air dry-bulb temperature : ˚CDB

(3) Outdoor intake air wet-bulb temperature : ˚CWB

(4) Total input : W

Indoor air wet/dry-bulb temperature difference on the left side of the chart on next page shows the difference between the indoor intake air wet/dry-bulb temperature and the indoor outlet air wet/dry-bulb temperature for your reference at service.

How to measure the indoor air wet-bulb/dry-bulb temperature difference

1. Attach at least 2 sets of wet and dry-bulb thermometers to the indoor air inlet as shown in the figure, and at least 2 sets of wet and dry bulb thermometers to the indoor air outlet. The thermometers must be attached to the position where air speed is high.
2. Attach at least 2 sets of wet and dry-bulb thermometers to the outdoor air inlet.
   Cover the thermometers to prevent direct rays of the sun.
3. Check that the air filter is cleaned.
4. Open windows and doors of the room.
5. Press the EMERGENCY OPERATION switch once(twice) to start the EMERGENCY COOL(HEAT) MODE.
6. When system stabilizes after more than 15 minutes, measure temperature and take an average temperature.
7. 10 minutes later, measure temperature again and check that the temperature does not change.

INDOOR UNIT

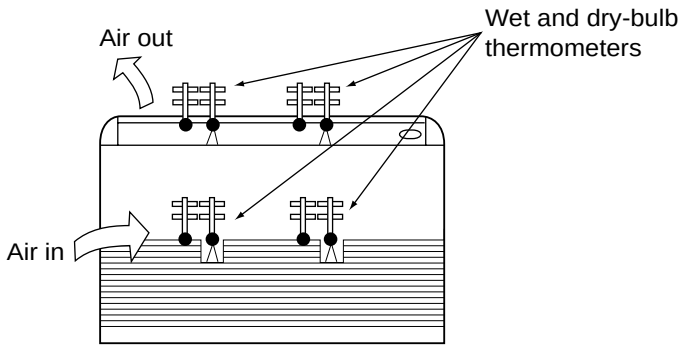

FRONT VIEW

OUTDOOR UNIT

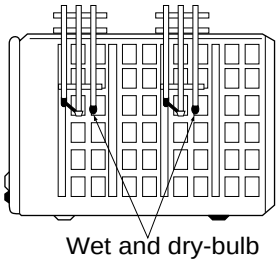

BACK VIEW

C.2.5.1 Cool Only

< CAPACITY AND THE INPUT CURVES >

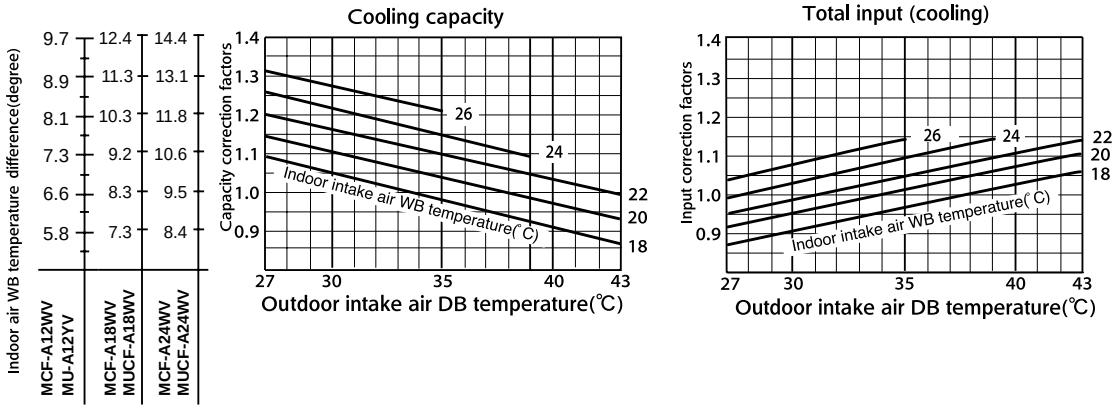

< OUTDOOR LOW PRESSURE AND OUTDOOR UNIT CURRENT >

COOL operation

① Both indoor and outdoor units are under the same temperature/humidity condition.

Dry Bulb temperature (˚C)	Relative humidity (%)
20	50
25	60
30	70

② Air flow should be set at MAX.

③ The unit of pressure has been changed to MPa on the international system of units(SI unit system).
The conversion factor is : **1(MPa [Gauge]) =10.2(kgf/㎠ [Gauge])**

MU-A12YV

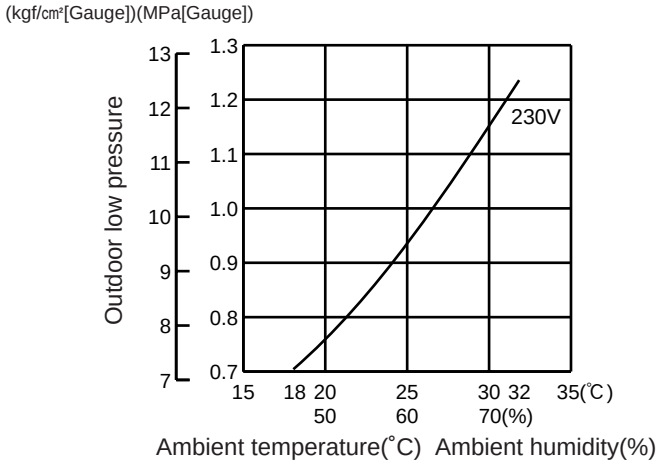

MU-A12YV

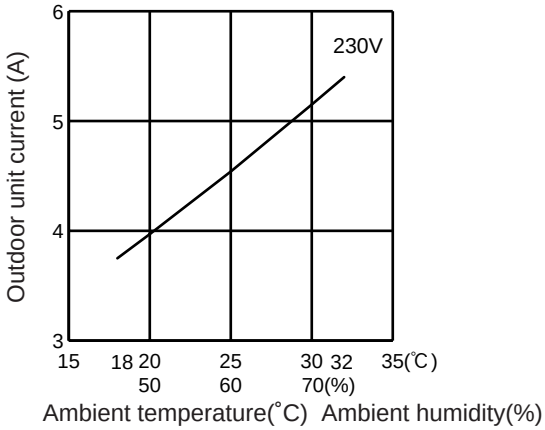

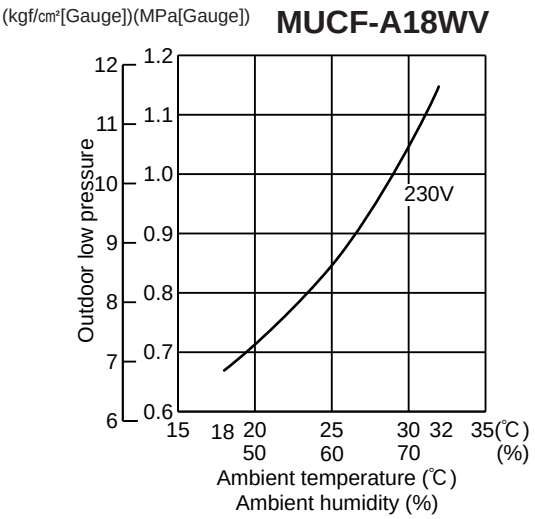
(kgf/cm²[Gauge])(MPa[Gauge])
MUCF-A18WV
Outdoor low pressure
12
11
10
9
8
7
6
1.2
1.1
1.0
0.9
0.8
0.7
0.6
230V
15 18 20 25 30 32 35(℃)
50 60 70 (%)
Ambient temperature (℃)
Ambient humidity (%)

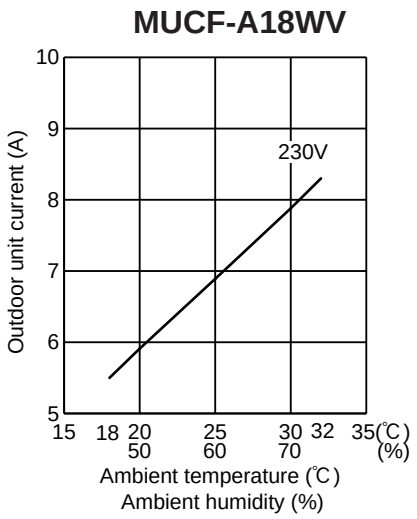
MUCF-A18WV
Outdoor unit current (A)
10
9
8
7
6
5
230V
15 18 20 25 30 32 35(℃)
50 60 70 (%)
Ambient temperature (℃)
Ambient humidity (%)

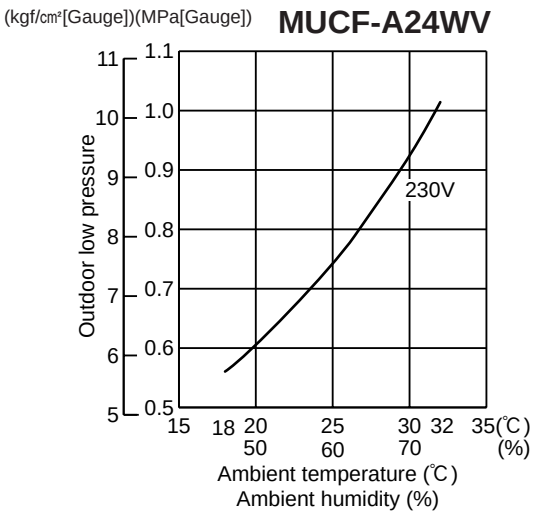
(kgf/cm²[Gauge])(MPa[Gauge])
MUCF-A24WV
Outdoor low pressure
11
10
9
8
7
6
5
1.1
1.0
0.9
0.8
0.7
0.6
0.5
230V
15 18 20 25 30 32 35(℃)
50 60 70 (%)
Ambient temperature (℃)
Ambient humidity (%)

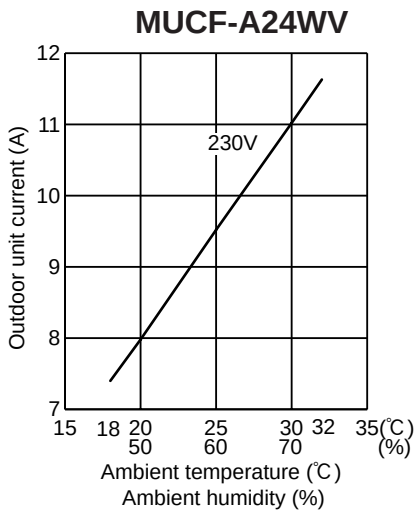
MUCF-A24WV
Outdoor unit current (A)
12
11
10
9
8
7
230V
15 18 20 25 30 32 35(℃)
50 60 70 (%)
Ambient temperature (℃)
Ambient humidity (%)

C.2.5.2 Heat Pump

< CAPACITY AND THE INPUT CURVES >

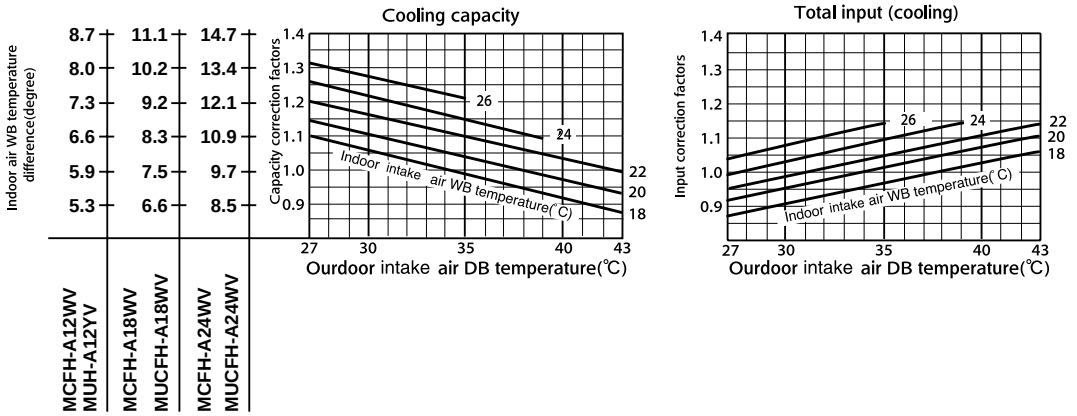

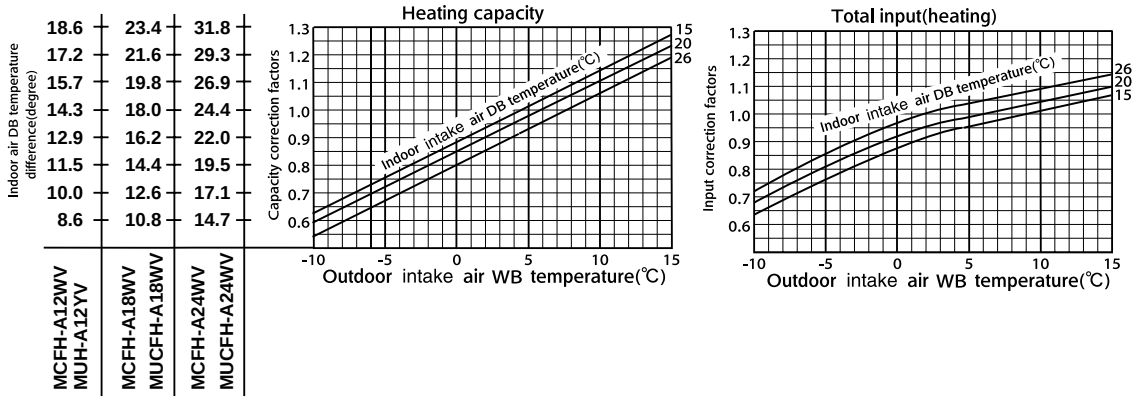

< OUTDOOR LOW PRESSURE AND OUTDOOR UNIT CURRENT >

COOL operation

① Both indoor and outdoor unit are under the same temperature/humidity condition.

Dry-bulb temperature	Relative humidity(%)
20	50
25	60
30	70

② Air flow should be set at MAX.

③ The unit of pressure has been changed to MPa on the international system of units(SI unit system).

The conversion factor is : **1(MPa[Gauge]) =10.2(kgf/㎠[Gauge])**

MUH-A12YV

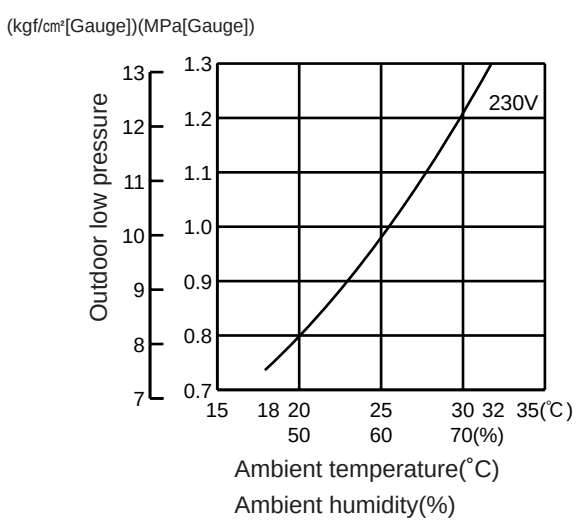

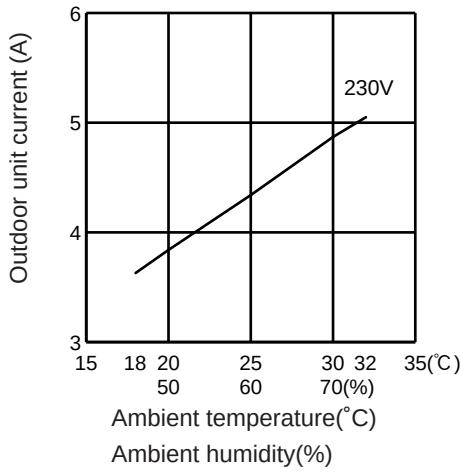

MUCFH-A18WV

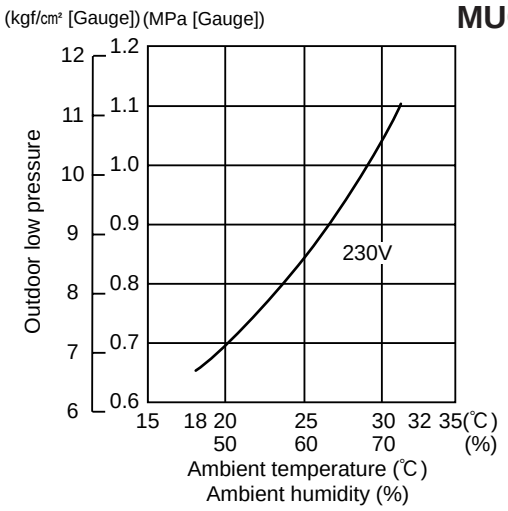

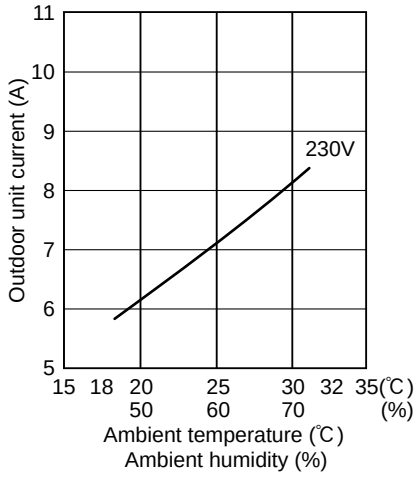

MUCFH-A24WV

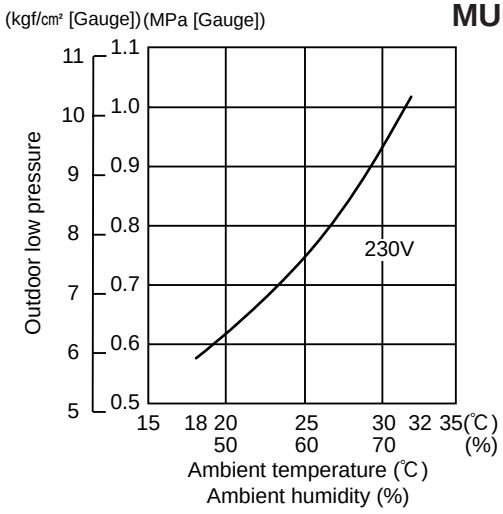

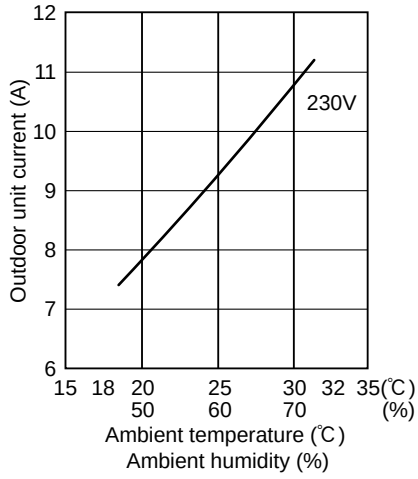

HEAT operation

Condition indoor:Dry bulb temperature 20.0°C
Wet bulb temperature 14.5°C

Outdoor:Dry bulb temperature 7,15,20°C
Wet bulb temperature 6,12,14.5°C

MUH-A12YV

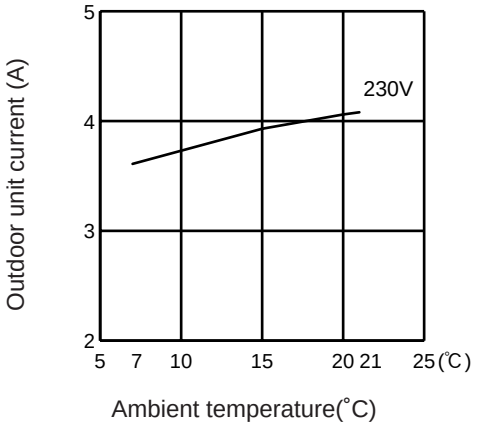

MUCFH-A18WV

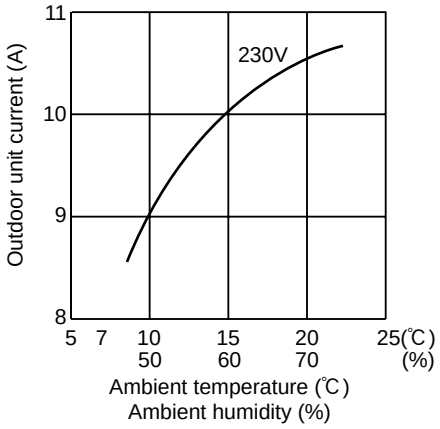

MUCFH-A24WV

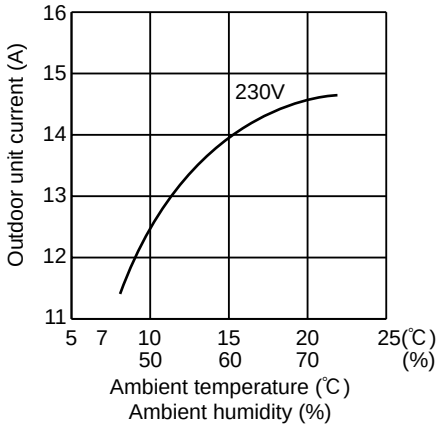

C.2.5.3 Inverter Heat Pump

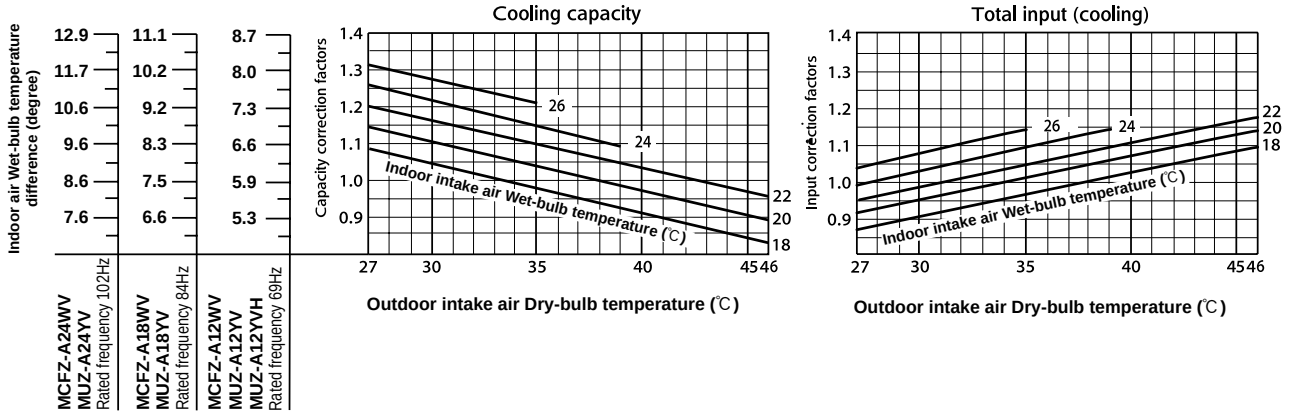

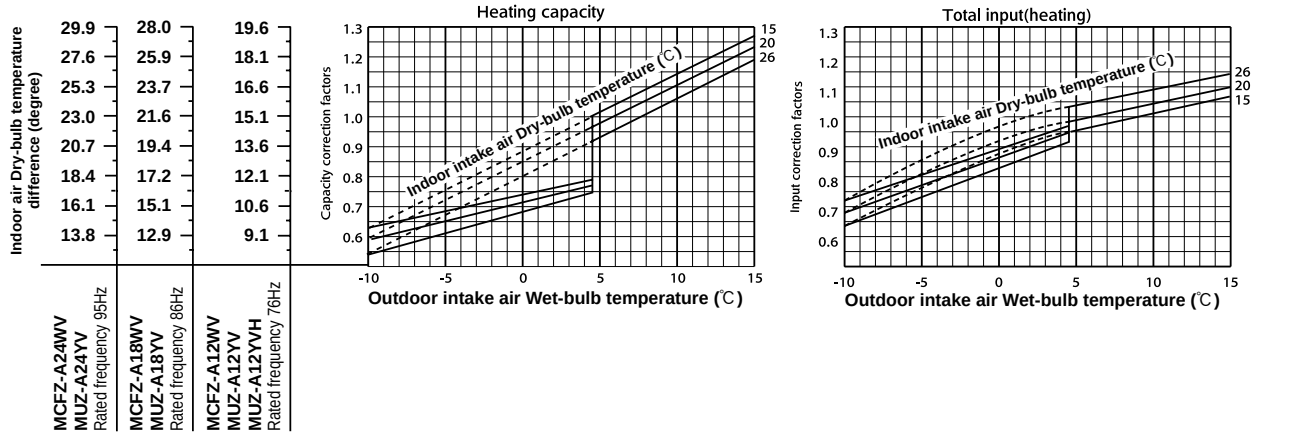

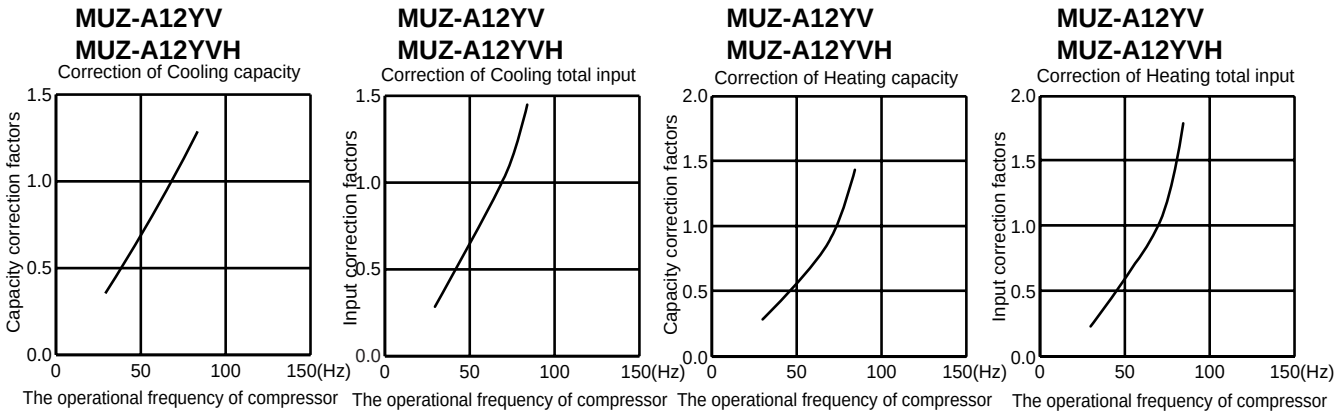

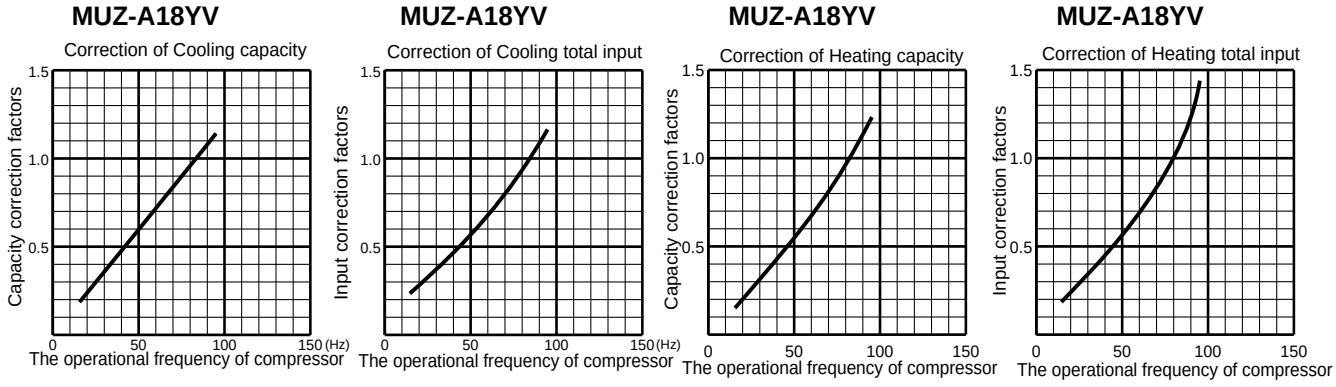

MUZ-A24YV

Correction of Cooling capacity

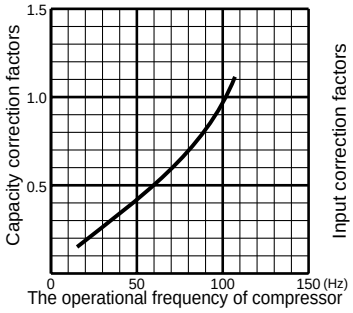

MUZ-A24YV

Correction of Cooling total input

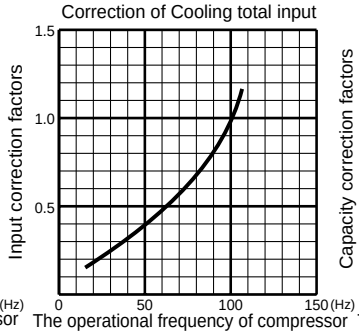

MUZ-A24YV

Correction of Heating capacity

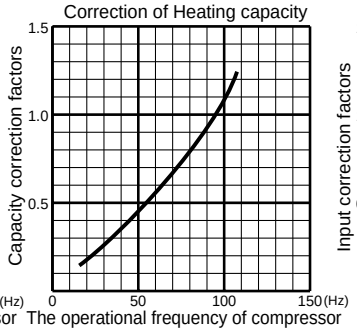

MUZ-A24YV

Correction of Heating total input

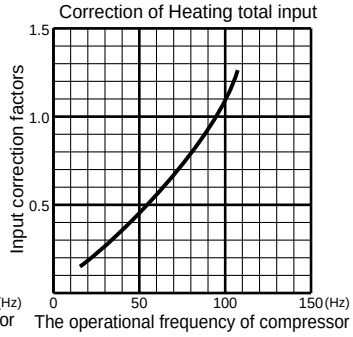

OUTDOOR LOW PRESSURE AND OUTDOOR UNIT CURRENT

<How to operate fixed-frequency operation (Test run operation)>

1. Press the EMERGENCY OPERATION switch to COOL or HEAT mode (COOL : Press once, HEAT : Press twice).
2. Test run operation starts and continue to operate for 30 minutes.
3. Compressor operates at rated frequency in COOL mode or 58Hz in HEAT mode.
4. Indoor fan operates at High speed.
5. After 30 minutes, test run operation finishes and EMERGENCY OPERATION starts (Operation frequency of compressor varies).
6. To cancel test run operation (EMERGENCY OPERATION), press the EMERGENCY OPERATION switch or any button on remote controller.

① Both indoor and outdoor unit are under the same temperature/humidity condition.

② Air flow : High speed

③ Operational frequency : 69Hz[MUZ-A12YV(H)]
25Hz[MUZ-A18/A24YV]

Dry-bulb temperature	Relative humidity(%)
20	50
25	60
30	70

MUZ-A12YV
MUZ-A12YVH

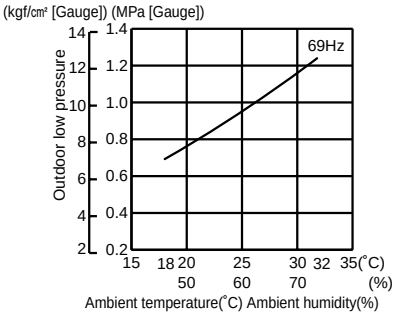

MUZ-A18YV

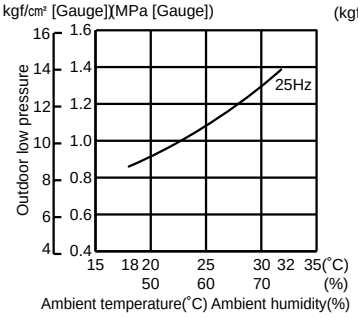

MUZ-A24YV

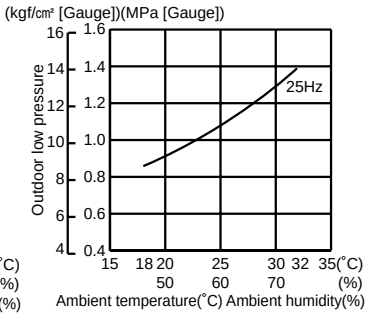

MUZ-A12YV
MUZ-A12YVH

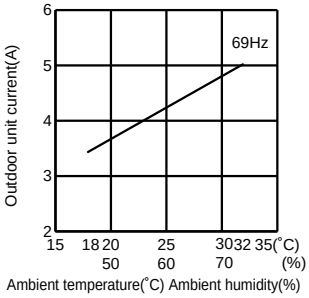

MUZ-A18YV

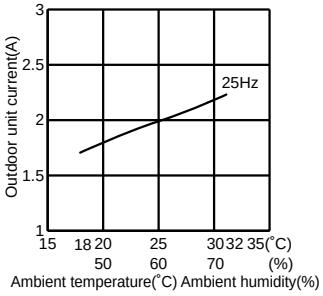

MUZ-A24YV

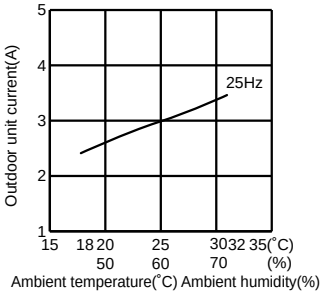

HEAT operation

Condition indoor: Dry bulb temperature 20.0°C
Wet bulb temperature 14.5°C
Condition outdoor: Dry bulb temperature 2,7,15,20.0°C
Wet bulb temperature 1,6,12,14.5°C

Operational frequency : 58Hz[MUZ-A12YV(H)]
32Hz[MUZ-A18/A24YV]

MUZ-A12YV
MUZ-A12YVH

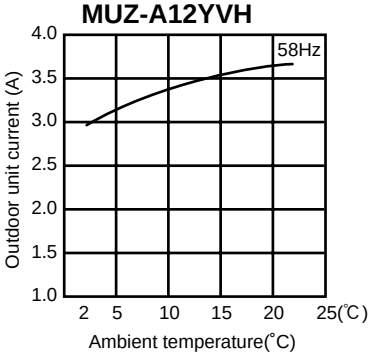

MUZ-A18YV

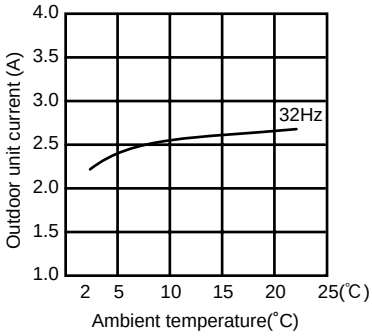

MUZ-A24YV

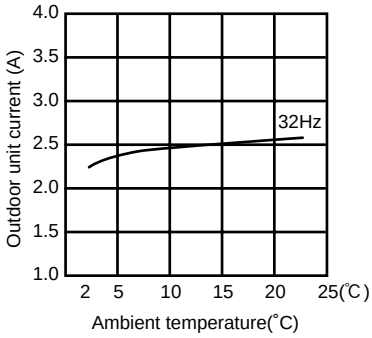

C.2.6 PERFORMANCE DATA

C.2.6.1 Cool Only

COOL operation (230V)

MCF-A12WV : MU-A12YV

CAPACITY :3.5(KW) SHF :0.70 INPUT :1160(W)

		OUTDOOR DB(℃)															
INDOOR DB(℃)	INDOOR WB(℃)	21				25				27				30			
		Q	SHC	SHF	INPUT	Q	SHC	SHF	INPUT	Q	SHC	SHF	INPUT	Q	SHC	SHF	INPUT
21	18	4.11	2.14	0.52	928	3.94	2.05	0.52	974	3.78	1.97	0.52	1021	3.64	1.89	0.52	1067
21	20	4.29	1.72	0.40	974	4.11	1.65	0.40	1032	3.99	1.60	0.40	1056	3.85	1.54	0.40	1102
22	18	4.11	2.30	0.56	928	3.94	2.21	0.56	974	3.78	2.12	0.56	1021	3.64	2.04	0.56	1067
22	20	4.29	1.89	0.44	974	4.11	1.81	0.44	1032	3.99	1.76	0.44	1056	3.85	1.69	0.44	1102
22	22	4.46	1.43	0.32	1009	4.31	1.38	0.32	1073	4.20	1.34	0.32	1102	4.03	1.29	0.32	1148
23	18	4.11	2.47	0.60	928	3.94	2.36	0.60	974	3.78	2.27	0.60	1021	3.64	2.18	0.60	1067
23	20	4.29	2.06	0.48	974	4.11	1.97	0.48	1032	3.99	1.92	0.48	1056	3.85	1.85	0.48	1102
23	22	4.46	1.61	0.36	1009	4.31	1.55	0.36	1073	4.20	1.51	0.36	1102	4.03	1.45	0.36	1148
24	18	4.11	2.63	0.64	928	3.94	2.52	0.64	974	3.78	2.42	0.64	1021	3.64	2.33	0.64	1067
24	20	4.29	2.23	0.52	974	4.11	2.14	0.52	1032	3.99	2.07	0.52	1056	3.85	2.00	0.52	1102
24	22	4.46	1.79	0.40	1009	4.31	1.72	0.40	1073	4.20	1.68	0.40	1102	4.03	1.61	0.40	1148
24	24	4.69	1.31	0.28	1056	4.52	1.26	0.28	1114	4.41	1.23	0.28	1148	4.27	1.20	0.28	1206
25	18	4.11	2.80	0.68	928	3.94	2.68	0.68	974	3.78	2.57	0.68	1021	3.64	2.48	0.68	1067
25	20	4.29	2.40	0.56	974	4.11	2.30	0.56	1032	3.99	2.23	0.56	1056	3.85	2.16	0.56	1102
25	22	4.46	1.96	0.44	1009	4.31	1.89	0.44	1073	4.20	1.85	0.44	1102	4.03	1.77	0.44	1148
25	24	4.69	1.50	0.32	1056	4.52	1.44	0.32	1114	4.41	1.41	0.32	1148	4.27	1.37	0.32	1206
26	18	4.11	2.96	0.72	928	3.94	2.84	0.72	974	3.78	2.72	0.72	1021	3.64	2.62	0.72	1067
26	20	4.29	2.57	0.60	974	4.11	2.47	0.60	1032	3.99	2.39	0.60	1056	3.85	2.31	0.60	1102
26	22	4.46	2.14	0.48	1009	4.31	2.07	0.48	1073	4.20	2.02	0.48	1102	4.03	1.93	0.48	1148
26	24	4.69	1.69	0.36	1056	4.52	1.63	0.36	1114	4.41	1.59	0.36	1148	4.27	1.54	0.36	1206
26	26	4.83	1.16	0.24	1114	4.69	1.13	0.24	1172	4.62	1.11	0.24	1206	4.48	1.08	0.24	1241
27	18	4.11	3.13	0.76	928	3.94	2.99	0.76	974	3.78	2.87	0.76	1021	3.64	2.77	0.76	1067
27	20	4.29	2.74	0.64	974	4.11	2.63	0.64	1032	3.99	2.55	0.64	1056	3.85	2.46	0.64	1102
27	22	4.46	2.32	0.52	1009	4.31	2.24	0.52	1073	4.20	2.18	0.52	1102	4.03	2.09	0.52	1148
27	24	4.69	1.88	0.40	1056	4.52	1.81	0.40	1114	4.41	1.76	0.40	1148	4.27	1.71	0.40	1206
27	26	4.83	1.35	0.28	1114	4.69	1.31	0.28	1172	4.62	1.29	0.28	1206	4.48	1.25	0.28	1241
28	18	4.11	3.29	0.80	928	3.94	3.15	0.80	974	3.78	3.02	0.80	1021	3.64	2.91	0.80	1067
28	20	4.29	2.92	0.68	974	4.11	2.80	0.68	1032	3.99	2.71	0.68	1056	3.85	2.62	0.68	1102
28	22	4.46	2.50	0.56	1009	4.31	2.41	0.56	1073	4.20	2.35	0.56	1102	4.03	2.25	0.56	1148
28	24	4.69	2.06	0.44	1056	4.52	1.99	0.44	1114	4.41	1.94	0.44	1148	4.27	1.88	0.44	1206
28	26	4.83	1.55	0.32	1114	4.69	1.50	0.32	1172	4.62	1.48	0.32	1206	4.48	1.43	0.32	1241
29	18	4.11	3.45	0.84	928	3.94	3.31	0.84	974	3.78	3.18	0.84	1021	3.64	3.06	0.84	1067
29	20	4.29	3.09	0.72	974	4.11	2.96	0.72	1032	3.99	2.87	0.72	1056	3.85	2.77	0.72	1102
29	22	4.46	2.68	0.60	1009	4.31	2.58	0.60	1073	4.20	2.52	0.60	1102	4.03	2.42	0.60	1148
29	24	4.69	2.25	0.48	1056	4.52	2.17	0.48	1114	4.41	2.12	0.48	1148	4.27	2.05	0.48	1206
29	26	4.83	1.74	0.36	1114	4.69	1.69	0.36	1172	4.62	1.66	0.36	1206	4.48	1.61	0.36	1241
30	18	4.11	3.62	0.88	928	3.94	3.47	0.88	974	3.78	3.33	0.88	1021	3.64	3.20	0.88	1067
30	20	4.29	3.26	0.76	974	4.11	3.13	0.76	1032	3.99	3.03	0.76	1056	3.85	2.93	0.76	1102
30	22	4.46	2.86	0.64	1009	4.31	2.76	0.64	1073	4.20	2.69	0.64	1102	4.03	2.58	0.64	1148
30	24	4.69	2.44	0.52	1056	4.52	2.35	0.52	1114	4.41	2.29	0.52	1148	4.27	2.22	0.52	1206
30	26	4.83	1.93	0.40	1114	4.69	1.88	0.40	1172	4.62	1.85	0.40	1206	4.48	1.79	0.40	1241
31	18	4.11	3.78	0.92	928	3.94	3.62	0.92	974	3.78	3.48	0.92	1021	3.64	3.35	0.92	1067
31	20	4.29	3.43	0.80	974	4.11	3.29	0.80	1032	3.99	3.19	0.80	1056	3.85	3.08	0.80	1102
31	22	4.46	3.03	0.68	1009	4.31	2.93	0.68	1073	4.20	2.86	0.68	1102	4.03	2.74	0.68	1148
31	24	4.69	2.63	0.56	1056	4.52	2.53	0.56	1114	4.41	2.47	0.56	1148	4.27	2.39	0.56	1206
31	26	4.83	2.13	0.44	1114	4.69	2.06	0.44	1172	4.62	2.03	0.44	1206	4.48	1.97	0.44	1241
32	18	4.11	3.95	0.96	928	3.94	3.78	0.96	974	3.78	3.63	0.96	1021	3.64	3.49	0.96	1067
32	20	4.29	3.60	0.84	974	4.11	3.45	0.84	1032	3.99	3.35	0.84	1056	3.85	3.23	0.84	1102
32	22	4.46	3.21	0.72	1009	4.31	3.10	0.72	1073	4.20	3.02	0.72	1102	4.03	2.90	0.72	1148
32	24	4.69	2.81	0.60	1056	4.52	2.71	0.60	1114	4.41	2.65	0.60	1148	4.27	2.56	0.60	1206
32	26	4.83	2.32	0.48	1114	4.69	2.25	0.48	1172	4.62	2.22	0.48	1206	4.48	2.15	0.48	1241

NOTE Q :Total capacity (kW) SHF :Sensible heat factor DB :Dry-bulb temperature
SHC :Sensible heat capacity (kW) INPUT :Total power input (W) WB :Wet-bulb temperature

COOL operation (230V)

MCF-A12WV : MU-A12YV

CAPACITY :3.5(KW) SHF :0.70 INPUT :1160(W)

		OUTDOOR DB(℃)											
INDOOR	INDOOR	35				40				43			
DB(℃)	WB(℃)	Q	SHC	SHF	INPUT	Q	SHC	SHF	INPUT	Q	SHC	SHF	INPUT
21	18	3.43	1.78	0.52	1137	3.15	1.64	0.52	1206	3.03	1.57	0.52	1230
21	20	3.61	1.44	0.40	1183	3.36	1.34	0.40	1241	3.24	1.30	0.40	1276
22	18	3.43	1.92	0.56	1137	3.15	1.76	0.56	1206	3.03	1.70	0.56	1230
22	20	3.61	1.59	0.44	1183	3.36	1.48	0.44	1241	3.24	1.42	0.44	1276
22	22	3.82	1.22	0.32	1230	3.57	1.14	0.32	1299	3.45	1.10	0.32	1322
23	18	3.43	2.06	0.60	1137	3.15	1.89	0.60	1206	3.03	1.82	0.60	1230
23	20	3.61	1.73	0.48	1183	3.36	1.61	0.48	1241	3.24	1.55	0.48	1276
23	22	3.82	1.37	0.36	1230	3.57	1.29	0.36	1299	3.45	1.24	0.36	1322
24	18	3.43	2.20	0.64	1137	3.15	2.02	0.64	1206	3.03	1.94	0.64	1230
24	20	3.61	1.87	0.52	1183	3.36	1.75	0.52	1241	3.24	1.68	0.52	1276
24	22	3.82	1.53	0.40	1230	3.57	1.43	0.40	1299	3.45	1.38	0.40	1322
24	24	4.03	1.13	0.28	1276	3.78	1.06	0.28	1334	3.68	1.03	0.28	1363
25	18	3.43	2.33	0.68	1137	3.15	2.14	0.68	1206	3.03	2.06	0.68	1230
25	20	3.61	2.02	0.56	1183	3.36	1.88	0.56	1241	3.24	1.81	0.56	1276
25	22	3.82	1.68	0.44	1230	3.57	1.57	0.44	1299	3.45	1.52	0.44	1322
25	24	4.03	1.29	0.32	1276	3.78	1.21	0.32	1334	3.68	1.18	0.32	1363
26	18	3.43	2.47	0.72	1137	3.15	2.27	0.72	1206	3.03	2.18	0.72	1230
26	20	3.61	2.16	0.60	1183	3.36	2.02	0.60	1241	3.24	1.94	0.60	1276
26	22	3.82	1.83	0.48	1230	3.57	1.71	0.48	1299	3.45	1.65	0.48	1322
26	24	4.03	1.45	0.36	1276	3.78	1.36	0.36	1334	3.68	1.32	0.36	1363
26	26	4.24	1.02	0.24	1322	3.99	0.96	0.24	1380	3.87	0.93	0.24	1409
27	18	3.43	2.61	0.76	1137	3.15	2.39	0.76	1206	3.03	2.30	0.76	1230
27	20	3.61	2.31	0.64	1183	3.36	2.15	0.64	1241	3.24	2.07	0.64	1276
27	22	3.82	1.98	0.52	1230	3.57	1.86	0.52	1299	3.45	1.79	0.52	1322
27	24	4.03	1.61	0.40	1276	3.78	1.51	0.40	1334	3.68	1.47	0.40	1363
27	26	4.24	1.19	0.28	1322	3.99	1.12	0.28	1380	3.87	1.08	0.28	1409
28	18	3.43	2.74	0.80	1137	3.15	2.52	0.80	1206	3.03	2.42	0.80	1230
28	20	3.61	2.45	0.68	1183	3.36	2.28	0.68	1241	3.24	2.20	0.68	1276
28	22	3.82	2.14	0.56	1230	3.57	2.00	0.56	1299	3.45	1.93	0.56	1322
28	24	4.03	1.77	0.44	1276	3.78	1.66	0.44	1334	3.68	1.62	0.44	1363
28	26	4.24	1.36	0.32	1322	3.99	1.28	0.32	1380	3.87	1.24	0.32	1409
29	18	3.43	2.88	0.84	1137	3.15	2.65	0.84	1206	3.03	2.54	0.84	1230
29	20	3.61	2.60	0.72	1183	3.36	2.42	0.72	1241	3.24	2.33	0.72	1276
29	22	3.82	2.29	0.60	1230	3.57	2.14	0.60	1299	3.45	2.07	0.60	1322
29	24	4.03	1.93	0.48	1276	3.78	1.81	0.48	1334	3.68	1.76	0.48	1363
29	26	4.24	1.52	0.36	1322	3.99	1.44	0.36	1380	3.87	1.39	0.36	1409
30	18	3.43	3.02	0.88	1137	3.15	2.77	0.88	1206	3.03	2.66	0.88	1230
30	20	3.61	2.74	0.76	1183	3.36	2.55	0.76	1241	3.24	2.46	0.76	1276
30	22	3.82	2.44	0.64	1230	3.57	2.28	0.64	1299	3.45	2.21	0.64	1322
30	24	4.03	2.09	0.52	1276	3.78	1.97	0.52	1334	3.68	1.91	0.52	1363
30	26	4.24	1.69	0.40	1322	3.99	1.60	0.40	1380	3.87	1.55	0.40	1409
31	18	3.43	3.16	0.92	1137	3.15	2.90	0.92	1206	3.03	2.79	0.92	1230
31	20	3.61	2.88	0.80	1183	3.36	2.69	0.80	1241	3.24	2.59	0.80	1276
31	22	3.82	2.59	0.68	1230	3.57	2.43	0.68	1299	3.45	2.34	0.68	1322
31	24	4.03	2.25	0.56	1276	3.78	2.12	0.56	1334	3.68	2.06	0.56	1363
31	26	4.24	1.86	0.44	1322	3.99	1.76	0.44	1380	3.87	1.70	0.44	1409
32	18	3.43	3.29	0.96	1137	3.15	3.02	0.96	1206	3.03	2.91	0.96	1230
32	20	3.61	3.03	0.84	1183	3.36	2.82	0.84	1241	3.24	2.72	0.84	1276
32	22	3.82	2.75	0.72	1230	3.57	2.57	0.72	1299	3.45	2.48	0.72	1322
32	24	4.03	2.42	0.60	1276	3.78	2.27	0.60	1334	3.68	2.21	0.60	1363
32	26	4.24	2.03	0.48	1322	3.99	1.92	0.48	1380	3.87	1.86	0.48	1409

NOTE Q :Total capacity (kW) SHF :Sensible heat factor DB :Dry-bulb temperature
SHC :Sensible heat capacity (kW) INPUT :Total power input (W) WB :Wet-bulb temperature

COOL operation(230V)

MCF-A18WV : MUCF-A18WV

CAPACITY :4.8(KW) SHF :0.65 INPUT :1810(W)

		OUTDOOR DB(℃)															
INDOOR DB(℃)	INDOOR WB(℃)	21				25				27				30			
		Q	SHC	SHF	INPUT	Q	SHC	SHF	INPUT	Q	SHC	SHF	INPUT	Q	SHC	SHF	INPUT
21	18	5.64	2.65	0.47	1448	5.40	2.54	0.47	1520	5.18	2.44	0.47	1593	4.99	2.35	0.47	1665
21	20	5.88	2.06	0.35	1520	5.64	1.97	0.35	1611	5.47	1.92	0.35	1647	5.28	1.85	0.35	1720
22	18	5.64	2.88	0.51	1448	5.40	2.75	0.51	1520	5.18	2.64	0.51	1593	4.99	2.55	0.51	1665
22	20	5.88	2.29	0.39	1520	5.64	2.20	0.39	1611	5.47	2.13	0.39	1647	5.28	2.06	0.39	1720
22	22	6.12	1.65	0.27	1575	5.90	1.59	0.27	1674	5.76	1.56	0.27	1720	5.52	1.49	0.27	1792
23	18	5.64	3.10	0.55	1448	5.40	2.97	0.55	1520	5.18	2.85	0.55	1593	4.99	2.75	0.55	1665
23	20	5.88	2.53	0.43	1520	5.64	2.43	0.43	1611	5.47	2.35	0.43	1647	5.28	2.27	0.43	1720
23	22	6.12	1.90	0.31	1575	5.90	1.83	0.31	1674	5.76	1.79	0.31	1720	5.52	1.71	0.31	1792
24	18	5.64	3.33	0.59	1448	5.40	3.19	0.59	1520	5.18	3.06	0.59	1593	4.99	2.95	0.59	1665
24	20	5.88	2.76	0.47	1520	5.64	2.65	0.47	1611	5.47	2.57	0.47	1647	5.28	2.48	0.47	1720
24	22	6.12	2.14	0.35	1575	5.90	2.07	0.35	1674	5.76	2.02	0.35	1720	5.52	1.93	0.35	1792
24	24	6.43	1.48	0.23	1647	6.19	1.42	0.23	1738	6.05	1.39	0.23	1792	5.86	1.35	0.23	1882
25	18	5.64	3.55	0.63	1448	5.40	3.40	0.63	1520	5.18	3.27	0.63	1593	4.99	3.14	0.63	1665
25	20	5.88	3.00	0.51	1520	5.64	2.88	0.51	1611	5.47	2.79	0.51	1647	5.28	2.69	0.51	1720
25	22	6.12	2.39	0.39	1575	5.90	2.30	0.39	1674	5.76	2.25	0.39	1720	5.52	2.15	0.39	1792
25	24	6.43	1.74	0.27	1647	6.19	1.67	0.27	1738	6.05	1.63	0.27	1792	5.86	1.58	0.27	1882
26	18	5.64	3.78	0.67	1448	5.40	3.62	0.67	1520	5.18	3.47	0.67	1593	4.99	3.34	0.67	1665
26	20	5.88	3.23	0.55	1520	5.64	3.10	0.55	1611	5.47	3.01	0.55	1647	5.28	2.90	0.55	1720
26	22	6.12	2.63	0.43	1575	5.90	2.54	0.43	1674	5.76	2.48	0.43	1720	5.52	2.37	0.43	1792
26	24	6.43	1.99	0.31	1647	6.19	1.92	0.31	1738	6.05	1.87	0.31	1792	5.86	1.82	0.31	1882
26	26	6.62	1.26	0.19	1738	6.43	1.22	0.19	1828	6.34	1.20	0.19	1882	6.14	1.17	0.19	1937
27	18	5.64	4.00	0.71	1448	5.40	3.83	0.71	1520	5.18	3.68	0.71	1593	4.99	3.54	0.71	1665
27	20	5.88	3.47	0.59	1520	5.64	3.33	0.59	1611	5.47	3.23	0.59	1647	5.28	3.12	0.59	1720
27	22	6.12	2.88	0.47	1575	5.90	2.77	0.47	1674	5.76	2.71	0.47	1720	5.52	2.59	0.47	1792
27	24	6.43	2.25	0.35	1647	6.19	2.17	0.35	1738	6.05	2.12	0.35	1792	5.86	2.05	0.35	1882
27	26	6.62	1.52	0.23	1738	6.43	1.48	0.23	1828	6.34	1.46	0.23	1882	6.14	1.41	0.23	1937
28	18	5.64	4.23	0.75	1448	5.40	4.05	0.75	1520	5.18	3.89	0.75	1593	4.99	3.74	0.75	1665
28	20	5.88	3.70	0.63	1520	5.64	3.55	0.63	1611	5.47	3.45	0.63	1647	5.28	3.33	0.63	1720
28	22	6.12	3.12	0.51	1575	5.90	3.01	0.51	1674	5.76	2.94	0.51	1720	5.52	2.82	0.51	1792
28	24	6.43	2.51	0.39	1647	6.19	2.41	0.39	1738	6.05	2.36	0.39	1792	5.86	2.28	0.39	1882
28	26	6.62	1.79	0.27	1738	6.43	1.74	0.27	1828	6.34	1.71	0.27	1882	6.14	1.66	0.27	1937
29	18	5.64	4.46	0.79	1448	5.40	4.27	0.79	1520	5.18	4.10	0.79	1593	4.99	3.94	0.79	1665
29	20	5.88	3.94	0.67	1520	5.64	3.78	0.67	1611	5.47	3.67	0.67	1647	5.28	3.54	0.67	1720
29	22	6.12	3.37	0.55	1575	5.90	3.25	0.55	1674	5.76	3.17	0.55	1720	5.52	3.04	0.55	1792
29	24	6.43	2.77	0.43	1647	6.19	2.66	0.43	1738	6.05	2.60	0.43	1792	5.86	2.52	0.43	1882
29	26	6.62	2.05	0.31	1738	6.43	1.99	0.31	1828	6.34	1.96	0.31	1882	6.14	1.90	0.31	1937
30	18	5.64	4.68	0.83	1448	5.40	4.48	0.83	1520	5.18	4.30	0.83	1593	4.99	4.14	0.83	1665
30	20	5.88	4.17	0.71	1520	5.64	4.00	0.71	1611	5.47	3.89	0.71	1647	5.28	3.75	0.71	1720
30	22	6.12	3.61	0.59	1575	5.90	3.48	0.59	1674	5.76	3.40	0.59	1720	5.52	3.26	0.59	1792
30	24	6.43	3.02	0.47	1647	6.19	2.91	0.47	1738	6.05	2.84	0.47	1792	5.86	2.75	0.47	1882
30	26	6.62	2.32	0.35	1738	6.43	2.25	0.35	1828	6.34	2.22	0.35	1882	6.14	2.15	0.35	1937
31	18	5.64	4.91	0.87	1448	5.40	4.70	0.87	1520	5.18	4.51	0.87	1593	4.99	4.34	0.87	1665
31	20	5.88	4.41	0.75	1520	5.64	4.23	0.75	1611	5.47	4.10	0.75	1647	5.28	3.96	0.75	1720
31	22	6.12	3.86	0.63	1575	5.90	3.72	0.63	1674	5.76	3.63	0.63	1720	5.52	3.48	0.63	1792
31	24	6.43	3.28	0.51	1647	6.19	3.16	0.51	1738	6.05	3.08	0.51	1792	5.86	2.99	0.51	1882
31	26	6.62	2.58	0.39	1738	6.43	2.51	0.39	1828	6.34	2.47	0.39	1882	6.14	2.40	0.39	1937
32	18	5.64	5.13	0.91	1448	5.40	4.91	0.91	1520	5.18	4.72	0.91	1593	4.99	4.54	0.91	1665
32	20	5.88	4.65	0.79	1520	5.64	4.46	0.79	1611	5.47	4.32	0.79	1647	5.28	4.17	0.79	1720
32	22	6.12	4.10	0.67	1575	5.90	3.96	0.67	1674	5.76	3.86	0.67	1720	5.52	3.70	0.67	1792
32	24	6.43	3.54	0.55	1647	6.19	3.41	0.55	1738	6.05	3.33	0.55	1792	5.86	3.22	0.55	1882
32	26	6.62	2.85	0.43	1738	6.43	2.77	0.43	1828	6.34	2.72	0.43	1882	6.14	2.64	0.43	1937

NOTE Q : Total capacity (kW) SHF : Sensible heat factor DB : Dry-bulb temperature
SHC : Sensible heat capacity (kW) INPUT : Total power input (W) WB : Wet-bulb temperature

COOL operation(230V)

MCF-A18WV : MUCF-A18WV

CAPACITY :4.8(KW) SHF :0.65 INPUT :1810(W)

		OUTDOOR DB(℃)											
INDOOR DB(℃)	INDOOR WB(℃)	35				40				43			
		Q	SHC	SHF	INPUT	Q	SHC	SHF	INPUT	Q	SHC	SHF	INPUT
21	18	4.70	2.21	0.47	1774	4.32	2.03	0.47	1882	4.15	1.95	0.47	1919
21	20	4.94	1.73	0.35	1846	4.61	1.61	0.35	1937	4.44	1.55	0.35	1991
22	18	4.70	2.40	0.51	1774	4.32	2.20	0.51	1882	4.15	2.12	0.51	1919
22	20	4.94	1.93	0.39	1846	4.61	1.80	0.39	1937	4.44	1.73	0.39	1991
22	22	5.23	1.41	0.27	1919	4.90	1.32	0.27	2027	4.73	1.28	0.27	2063
23	18	4.70	2.59	0.55	1774	4.32	2.38	0.55	1882	4.15	2.28	0.55	1919
23	20	4.94	2.13	0.43	1846	4.61	1.98	0.43	1937	4.44	1.91	0.43	1991
23	22	5.23	1.62	0.31	1919	4.90	1.52	0.31	2027	4.73	1.47	0.31	2063
24	18	4.70	2.78	0.59	1774	4.32	2.55	0.59	1882	4.15	2.45	0.59	1919
24	20	4.94	2.32	0.47	1846	4.61	2.17	0.47	1937	4.44	2.09	0.47	1991
24	22	5.23	1.83	0.35	1919	4.90	1.71	0.35	2027	4.73	1.65	0.35	2063
24	24	5.52	1.27	0.23	1991	5.18	1.19	0.23	2082	5.04	1.16	0.23	2127
25	18	4.70	2.96	0.63	1774	4.32	2.72	0.63	1882	4.15	2.62	0.63	1919
25	20	4.94	2.52	0.51	1846	4.61	2.35	0.51	1937	4.44	2.26	0.51	1991
25	22	5.23	2.04	0.39	1919	4.90	1.91	0.39	2027	4.73	1.84	0.39	2063
25	24	5.52	1.49	0.27	1991	5.18	1.40	0.27	2082	5.04	1.36	0.27	2127
26	18	4.70	3.15	0.67	1774	4.32	2.89	0.67	1882	4.15	2.78	0.67	1919
26	20	4.94	2.72	0.55	1846	4.61	2.53	0.55	1937	4.44	2.44	0.55	1991
26	22	5.23	2.25	0.43	1919	4.90	2.11	0.43	2027	4.73	2.03	0.43	2063
26	24	5.52	1.71	0.31	1991	5.18	1.61	0.31	2082	5.04	1.56	0.31	2127
26	26	5.81	1.10	0.19	2063	5.47	1.04	0.19	2154	5.30	1.01	0.19	2199
27	18	4.70	3.34	0.71	1774	4.32	3.07	0.71	1882	4.15	2.95	0.71	1919
27	20	4.94	2.92	0.59	1846	4.61	2.72	0.59	1937	4.44	2.62	0.59	1991
27	22	5.23	2.46	0.47	1919	4.90	2.30	0.47	2027	4.73	2.22	0.47	2063
27	24	5.52	1.93	0.35	1991	5.18	1.81	0.35	2082	5.04	1.76	0.35	2127
27	26	5.81	1.34	0.23	2063	5.47	1.26	0.23	2154	5.30	1.22	0.23	2199
28	18	4.70	3.53	0.75	1774	4.32	3.24	0.75	1882	4.15	3.11	0.75	1919
28	20	4.94	3.11	0.63	1846	4.61	2.90	0.63	1937	4.44	2.80	0.63	1991
28	22	5.23	2.67	0.51	1919	4.90	2.50	0.51	2027	4.73	2.41	0.51	2063
28	24	5.52	2.15	0.39	1991	5.18	2.02	0.39	2082	5.04	1.97	0.39	2127
28	26	5.81	1.57	0.27	2063	5.47	1.48	0.27	2154	5.30	1.43	0.27	2199
29	18	4.70	3.72	0.79	1774	4.32	3.41	0.79	1882	4.15	3.28	0.79	1919
29	20	4.94	3.31	0.67	1846	4.61	3.09	0.67	1937	4.44	2.97	0.67	1991
29	22	5.23	2.88	0.55	1919	4.90	2.69	0.55	2027	4.73	2.60	0.55	2063
29	24	5.52	2.37	0.43	1991	5.18	2.23	0.43	2082	5.04	2.17	0.43	2127
29	26	5.81	1.80	0.31	2063	5.47	1.70	0.31	2154	5.30	1.64	0.31	2199
30	18	4.70	3.90	0.83	1774	4.32	3.59	0.83	1882	4.15	3.45	0.83	1919
30	20	4.94	3.51	0.71	1846	4.61	3.27	0.71	1937	4.44	3.15	0.71	1991
30	22	5.23	3.09	0.59	1919	4.90	2.89	0.59	2027	4.73	2.79	0.59	2063
30	24	5.52	2.59	0.47	1991	5.18	2.44	0.47	2082	5.04	2.37	0.47	2127
30	26	5.81	2.03	0.35	2063	5.47	1.92	0.35	2154	5.30	1.86	0.35	2199
31	18	4.70	4.09	0.87	1774	4.32	3.76	0.87	1882	4.15	3.61	0.87	1919
31	20	4.94	3.71	0.75	1846	4.61	3.46	0.75	1937	4.44	3.33	0.75	1991
31	22	5.23	3.30	0.63	1919	4.90	3.08	0.63	2027	4.73	2.98	0.63	2063
31	24	5.52	2.82	0.51	1991	5.18	2.64	0.51	2082	5.04	2.57	0.51	2127
31	26	5.81	2.27	0.39	2063	5.47	2.13	0.39	2154	5.30	2.07	0.39	2199
32	18	4.70	4.28	0.91	1774	4.32	3.93	0.91	1882	4.15	3.78	0.91	1919
32	20	4.94	3.91	0.79	1846	4.61	3.64	0.79	1937	4.44	3.51	0.79	1991
32	22	5.23	3.51	0.67	1919	4.90	3.28	0.67	2027	4.73	3.17	0.67	2063
32	24	5.52	3.04	0.55	1991	5.18	2.85	0.55	2082	5.04	2.77	0.55	2127
32	26	5.81	2.50	0.43	2063	5.47	2.35	0.43	2154	5.30	2.28	0.43	2199

NOTE Q : Total capacity (kW) SHF : Sensible heat factor DB : Dry-bulb temperature
SHC : Sensible heat capacity (kW) INPUT : Total power input (W) WB : Wet-bulb temperature

COOL operation(230V)

MCF-A24WV : MUCF-A24WV

CAPACITY :6.0(KW) SHF :0.64 INPUT :2450(W)

		OUTDOOR DB(℃)															
INDOOR	INDOOR	21				25				27				30			
DB(℃)	WB(℃)	Q	SHC	SHF	INPUT	Q	SHC	SHF	INPUT	Q	SHC	SHF	INPUT	Q	SHC	SHF	INPUT
21	18	7.05	3.24	0.46	1960	6.75	3.11	0.46	2058	6.48	2.98	0.46	2156	6.24	2.87	0.46	2254
21	20	7.35	2.50	0.34	2058	7.05	2.40	0.34	2181	6.84	2.33	0.34	2230	6.60	2.24	0.34	2328
22	18	7.05	3.53	0.50	1960	6.75	3.38	0.50	2058	6.48	3.24	0.50	2156	6.24	3.12	0.50	2254
22	20	7.35	2.79	0.38	2058	7.05	2.68	0.38	2181	6.84	2.60	0.38	2230	6.60	2.51	0.38	2328
22	22	7.65	1.99	0.26	2132	7.38	1.92	0.26	2266	7.20	1.87	0.26	2328	6.90	1.79	0.26	2426
23	18	7.05	3.81	0.54	1960	6.75	3.65	0.54	2058	6.48	3.50	0.54	2156	6.24	3.37	0.54	2254
23	20	7.35	3.09	0.42	2058	7.05	2.96	0.42	2181	6.84	2.87	0.42	2230	6.60	2.77	0.42	2328
23	22	7.65	2.30	0.30	2132	7.38	2.21	0.30	2266	7.20	2.16	0.30	2328	6.90	2.07	0.30	2426
24	18	7.05	4.09	0.58	1960	6.75	3.92	0.58	2058	6.48	3.76	0.58	2156	6.24	3.62	0.58	2254
24	20	7.35	3.38	0.46	2058	7.05	3.24	0.46	2181	6.84	3.15	0.46	2230	6.60	3.04	0.46	2328
24	22	7.65	2.60	0.34	2132	7.38	2.51	0.34	2266	7.20	2.45	0.34	2328	6.90	2.35	0.34	2426
24	24	8.04	1.77	0.22	2230	7.74	1.70	0.22	2352	7.56	1.66	0.22	2426	7.32	1.61	0.22	2548
25	18	7.05	4.37	0.62	1960	6.75	4.19	0.62	2058	6.48	4.02	0.62	2156	6.24	3.87	0.62	2254
25	20	7.35	3.68	0.50	2058	7.05	3.53	0.50	2181	6.84	3.42	0.50	2230	6.60	3.30	0.50	2328
25	22	7.65	2.91	0.38	2132	7.38	2.80	0.38	2266	7.20	2.74	0.38	2328	6.90	2.62	0.38	2426
25	24	8.04	2.09	0.26	2230	7.74	2.01	0.26	2352	7.56	1.97	0.26	2426	7.32	1.90	0.26	2548
26	18	7.05	4.65	0.66	1960	6.75	4.46	0.66	2058	6.48	4.28	0.66	2156	6.24	4.12	0.66	2254
26	20	7.35	3.97	0.54	2058	7.05	3.81	0.54	2181	6.84	3.69	0.54	2230	6.60	3.56	0.54	2328
26	22	7.65	3.21	0.42	2132	7.38	3.10	0.42	2266	7.20	3.02	0.42	2328	6.90	2.90	0.42	2426
26	24	8.04	2.41	0.30	2230	7.74	2.32	0.30	2352	7.56	2.27	0.30	2426	7.32	2.20	0.30	2548
26	26	8.28	1.49	0.18	2352	8.04	1.45	0.18	2475	7.92	1.43	0.18	2548	7.68	1.38	0.18	2622
27	18	7.05	4.94	0.70	1960	6.75	4.73	0.70	2058	6.48	4.54	0.70	2156	6.24	4.37	0.70	2254
27	20	7.35	4.26	0.58	2058	7.05	4.09	0.58	2181	6.84	3.97	0.58	2230	6.60	3.83	0.58	2328
27	22	7.65	3.52	0.46	2132	7.38	3.39	0.46	2266	7.20	3.31	0.46	2328	6.90	3.17	0.46	2426
27	24	8.04	2.73	0.34	2230	7.74	2.63	0.34	2352	7.56	2.57	0.34	2426	7.32	2.49	0.34	2548
27	26	8.28	1.82	0.22	2352	8.04	1.77	0.22	2475	7.92	1.74	0.22	2548	7.68	1.69	0.22	2622
28	18	7.05	5.22	0.74	1960	6.75	5.00	0.74	2058	6.48	4.80	0.74	2156	6.24	4.62	0.74	2254
28	20	7.35	4.56	0.62	2058	7.05	4.37	0.62	2181	6.84	4.24	0.62	2230	6.60	4.09	0.62	2328
28	22	7.65	3.83	0.50	2132	7.38	3.69	0.50	2266	7.20	3.60	0.50	2328	6.90	3.45	0.50	2426
28	24	8.04	3.06	0.38	2230	7.74	2.94	0.38	2352	7.56	2.87	0.38	2426	7.32	2.78	0.38	2548
28	26	8.28	2.15	0.26	2352	8.04	2.09	0.26	2475	7.92	2.06	0.26	2548	7.68	2.00	0.26	2622
29	18	7.05	5.50	0.78	1960	6.75	5.27	0.78	2058	6.48	5.05	0.78	2156	6.24	4.87	0.78	2254
29	20	7.35	4.85	0.66	2058	7.05	4.65	0.66	2181	6.84	4.51	0.66	2230	6.60	4.36	0.66	2328
29	22	7.65	4.13	0.54	2132	7.38	3.99	0.54	2266	7.20	3.89	0.54	2328	6.90	3.73	0.54	2426
29	24	8.04	3.38	0.42	2230	7.74	3.25	0.42	2352	7.56	3.18	0.42	2426	7.32	3.07	0.42	2548
29	26	8.28	2.48	0.30	2352	8.04	2.41	0.30	2475	7.92	2.38	0.30	2548	7.68	2.30	0.30	2622
30	18	7.05	5.78	0.82	1960	6.75	5.54	0.82	2058	6.48	5.31	0.82	2156	6.24	5.12	0.82	2254
30	20	7.35	5.15	0.70	2058	7.05	4.94	0.70	2181	6.84	4.79	0.70	2230	6.60	4.62	0.70	2328
30	22	7.65	4.44	0.58	2132	7.38	4.28	0.58	2266	7.20	4.18	0.58	2328	6.90	4.00	0.58	2426
30	24	8.04	3.70	0.46	2230	7.74	3.56	0.46	2352	7.56	3.48	0.46	2426	7.32	3.37	0.46	2548
30	26	8.28	2.82	0.34	2352	8.04	2.73	0.34	2475	7.92	2.69	0.34	2548	7.68	2.61	0.34	2622
31	18	7.05	6.06	0.86	1960	6.75	5.81	0.86	2058	6.48	5.57	0.86	2156	6.24	5.37	0.86	2254
31	20	7.35	5.44	0.74	2058	7.05	5.22	0.74	2181	6.84	5.06	0.74	2230	6.60	4.88	0.74	2328
31	22	7.65	4.74	0.62	2132	7.38	4.58	0.62	2266	7.20	4.46	0.62	2328	6.90	4.28	0.62	2426
31	24	8.04	4.02	0.50	2230	7.74	3.87	0.50	2352	7.56	3.78	0.50	2426	7.32	3.66	0.50	2548
31	26	8.28	3.15	0.38	2352	8.04	3.06	0.38	2475	7.92	3.01	0.38	2548	7.68	2.92	0.38	2622
32	18	7.05	6.35	0.90	1960	6.75	6.08	0.90	2058	6.48	5.83	0.90	2156	6.24	5.62	0.90	2254
32	20	7.35	5.73	0.78	2058	7.05	5.50	0.78	2181	6.84	5.34	0.78	2230	6.60	5.15	0.78	2328
32	22	7.65	5.05	0.66	2132	7.38	4.87	0.66	2266	7.20	4.75	0.66	2328	6.90	4.55	0.66	2426
32	24	8.04	4.34	0.54	2230	7.74	4.18	0.54	2352	7.56	4.08	0.54	2426	7.32	3.95	0.54	2548
32	26	8.28	3.48	0.42	2352	8.04	3.38	0.42	2475	7.92	3.33	0.42	2548	7.68	3.23	0.42	2622

NOTE Q : Total capacity (kW) SHF : Sensible heat factor DB : Dry-bulb temperature
SHC : Sensible heat capacity (kW) INPUT : Total power input (W) WB : Wet-bulb temperature

COOL operation(230V)

MCF-A24WV : MUCF-A24WV

CAPACITY :6.0(KW) SHF :0.64 INPUT :2450(W)

		OUTDOOR DB(℃)											
INDOOR DB(℃)	INDOOR WB(℃)	35				40				43			
		Q	SHC	SHF	INPUT	Q	SHC	SHF	INPUT	Q	SHC	SHF	INPUT
21	18	5.88	2.70	0.46	2401	5.40	2.48	0.46	2548	5.19	2.39	0.46	2597
21	20	6.18	2.10	0.34	2499	5.76	1.96	0.34	2622	5.55	1.89	0.34	2695
22	18	5.88	2.94	0.50	2401	5.40	2.70	0.50	2548	5.19	2.60	0.50	2597
22	20	6.18	2.35	0.38	2499	5.76	2.19	0.38	2622	5.55	2.11	0.38	2695
22	22	6.54	1.70	0.26	2597	6.12	1.59	0.26	2744	5.91	1.54	0.26	2793
23	18	5.88	3.18	0.54	2401	5.40	2.92	0.54	2548	5.19	2.80	0.54	2597
23	20	6.18	2.60	0.42	2499	5.76	2.42	0.42	2622	5.55	2.33	0.42	2695
23	22	6.54	1.96	0.30	2597	6.12	1.84	0.30	2744	5.91	1.77	0.30	2793
24	18	5.88	3.41	0.58	2401	5.40	3.13	0.58	2548	5.19	3.01	0.58	2597
24	20	6.18	2.84	0.46	2499	5.76	2.65	0.46	2622	5.55	2.55	0.46	2695
24	22	6.54	2.22	0.34	2597	6.12	2.08	0.34	2744	5.91	2.01	0.34	2793
24	24	6.90	1.52	0.22	2695	6.48	1.43	0.22	2818	6.30	1.39	0.22	2879
25	18	5.88	3.65	0.62	2401	5.40	3.35	0.62	2548	5.19	3.22	0.62	2597
25	20	6.18	3.09	0.50	2499	5.76	2.88	0.50	2622	5.55	2.78	0.50	2695
25	22	6.54	2.49	0.38	2597	6.12	2.33	0.38	2744	5.91	2.25	0.38	2793
25	24	6.90	1.79	0.26	2695	6.48	1.68	0.26	2818	6.30	1.64	0.26	2879
26	18	5.88	3.88	0.66	2401	5.40	3.56	0.66	2548	5.19	3.43	0.66	2597
26	20	6.18	3.34	0.54	2499	5.76	3.11	0.54	2622	5.55	3.00	0.54	2695
26	22	6.54	2.75	0.42	2597	6.12	2.57	0.42	2744	5.91	2.48	0.42	2793
26	24	6.90	2.07	0.30	2695	6.48	1.94	0.30	2818	6.30	1.89	0.30	2879
26	26	7.26	1.31	0.18	2793	6.84	1.23	0.18	2916	6.63	1.19	0.18	2977
27	18	5.88	4.12	0.70	2401	5.40	3.78	0.70	2548	5.19	3.63	0.70	2597
27	20	6.18	3.58	0.58	2499	5.76	3.34	0.58	2622	5.55	3.22	0.58	2695
27	22	6.54	3.01	0.46	2597	6.12	2.82	0.46	2744	5.91	2.72	0.46	2793
27	24	6.90	2.35	0.34	2695	6.48	2.20	0.34	2818	6.30	2.14	0.34	2879
27	26	7.26	1.60	0.22	2793	6.84	1.50	0.22	2916	6.63	1.46	0.22	2977
28	18	5.88	4.35	0.74	2401	5.40	4.00	0.74	2548	5.19	3.84	0.74	2597
28	20	6.18	3.83	0.62	2499	5.76	3.57	0.62	2622	5.55	3.44	0.62	2695
28	22	6.54	3.27	0.50	2597	6.12	3.06	0.50	2744	5.91	2.96	0.50	2793
28	24	6.90	2.62	0.38	2695	6.48	2.46	0.38	2818	6.30	2.39	0.38	2879
28	26	7.26	1.89	0.26	2793	6.84	1.78	0.26	2916	6.63	1.72	0.26	2977
29	18	5.88	4.59	0.78	2401	5.40	4.21	0.78	2548	5.19	4.05	0.78	2597
29	20	6.18	4.08	0.66	2499	5.76	3.80	0.66	2622	5.55	3.66	0.66	2695
29	22	6.54	3.53	0.54	2597	6.12	3.30	0.54	2744	5.91	3.19	0.54	2793
29	24	6.90	2.90	0.42	2695	6.48	2.72	0.42	2818	6.30	2.65	0.42	2879
29	26	7.26	2.18	0.30	2793	6.84	2.05	0.30	2916	6.63	1.99	0.30	2977
30	18	5.88	4.82	0.82	2401	5.40	4.43	0.82	2548	5.19	4.26	0.82	2597
30	20	6.18	4.33	0.70	2499	5.76	4.03	0.70	2622	5.55	3.89	0.70	2695
30	22	6.54	3.79	0.58	2597	6.12	3.55	0.58	2744	5.91	3.43	0.58	2793
30	24	6.90	3.17	0.46	2695	6.48	2.98	0.46	2818	6.30	2.90	0.46	2879
30	26	7.26	2.47	0.34	2793	6.84	2.33	0.34	2916	6.63	2.25	0.34	2977
31	18	5.88	5.06	0.86	2401	5.40	4.64	0.86	2548	5.19	4.46	0.86	2597
31	20	6.18	4.57	0.74	2499	5.76	4.26	0.74	2622	5.55	4.11	0.74	2695
31	22	6.54	4.05	0.62	2597	6.12	3.79	0.62	2744	5.91	3.66	0.62	2793
31	24	6.90	3.45	0.50	2695	6.48	3.24	0.50	2818	6.30	3.15	0.50	2879
31	26	7.26	2.76	0.38	2793	6.84	2.60	0.38	2916	6.63	2.52	0.38	2977
32	18	5.88	5.29	0.90	2401	5.40	4.86	0.90	2548	5.19	4.67	0.90	2597
32	20	6.18	4.82	0.78	2499	5.76	4.49	0.78	2622	5.55	4.33	0.78	2695
32	22	6.54	4.32	0.66	2597	6.12	4.04	0.66	2744	5.91	3.90	0.66	2793
32	24	6.90	3.73	0.54	2695	6.48	3.50	0.54	2818	6.30	3.40	0.54	2879
32	26	7.26	3.05	0.42	2793	6.84	2.87	0.42	2916	6.63	2.78	0.42	2977

NOTE Q : Total capacity (kW) SHF : Sensible heat factor DB : Dry-bulb temperature
SHC : Sensible heat capacity (kW) INPUT : Total power input (W) WB : Wet-bulb temperature

C.2.6.2 Heat Pump

COOL operation (230V)

MCFH-A12WV : MUH-A12YV

CAPACITY :3.5(KW) SHF :0.70 INPUT :1160(W)

		OUTDOOR DB(℃)															
INDOOR DB(℃)	INDOOR WB(℃)	21				25				27				30			
		Q	SHC	SHF	INPUT	Q	SHC	SHF	INPUT	Q	SHC	SHF	INPUT	Q	SHC	SHF	INPUT
21	18	4.11	2.14	0.52	928	3.94	2.05	0.52	974	3.78	1.97	0.52	1021	3.64	1.89	0.52	1067
21	20	4.29	1.72	0.40	974	4.11	1.65	0.40	1032	3.99	1.60	0.40	1056	3.85	1.54	0.40	1102
22	18	4.11	2.30	0.56	928	3.94	2.21	0.56	974	3.78	2.12	0.56	1021	3.64	2.04	0.56	1067
22	20	4.29	1.89	0.44	974	4.11	1.81	0.44	1032	3.99	1.76	0.44	1056	3.85	1.69	0.44	1102
22	22	4.46	1.43	0.32	1009	4.31	1.38	0.32	1073	4.20	1.34	0.32	1102	4.03	1.29	0.32	1148
23	18	4.11	2.47	0.60	928	3.94	2.36	0.60	974	3.78	2.27	0.60	1021	3.64	2.18	0.60	1067
23	20	4.29	2.06	0.48	974	4.11	1.97	0.48	1032	3.99	1.92	0.48	1056	3.85	1.85	0.48	1102
23	22	4.46	1.61	0.36	1009	4.31	1.55	0.36	1073	4.20	1.51	0.36	1102	4.03	1.45	0.36	1148
24	18	4.11	2.63	0.64	928	3.94	2.52	0.64	974	3.78	2.42	0.64	1021	3.64	2.33	0.64	1067
24	20	4.29	2.23	0.52	974	4.11	2.14	0.52	1032	3.99	2.07	0.52	1056	3.85	2.00	0.52	1102
24	22	4.46	1.79	0.40	1009	4.31	1.72	0.40	1073	4.20	1.68	0.40	1102	4.03	1.61	0.40	1148
24	24	4.69	1.31	0.28	1056	4.52	1.26	0.28	1114	4.41	1.23	0.28	1148	4.27	1.20	0.28	1206
25	18	4.11	2.80	0.68	928	3.94	2.68	0.68	974	3.78	2.57	0.68	1021	3.64	2.48	0.68	1067
25	20	4.29	2.40	0.56	974	4.11	2.30	0.56	1032	3.99	2.23	0.56	1056	3.85	2.16	0.56	1102
25	22	4.46	1.96	0.44	1009	4.31	1.89	0.44	1073	4.20	1.85	0.44	1102	4.03	1.77	0.44	1148
25	24	4.69	1.50	0.32	1056	4.52	1.44	0.32	1114	4.41	1.41	0.32	1148	4.27	1.37	0.32	1206
26	18	4.11	2.96	0.72	928	3.94	2.84	0.72	974	3.78	2.72	0.72	1021	3.64	2.62	0.72	1067
26	20	4.29	2.57	0.60	974	4.11	2.47	0.60	1032	3.99	2.39	0.60	1056	3.85	2.31	0.60	1102
26	22	4.46	2.14	0.48	1009	4.31	2.07	0.48	1073	4.20	2.02	0.48	1102	4.03	1.93	0.48	1148
26	24	4.69	1.69	0.36	1056	4.52	1.63	0.36	1114	4.41	1.59	0.36	1148	4.27	1.54	0.36	1206
26	26	4.83	1.16	0.24	1114	4.69	1.13	0.24	1172	4.62	1.11	0.24	1206	4.48	1.08	0.24	1241
27	18	4.11	3.13	0.76	928	3.94	2.99	0.76	974	3.78	2.87	0.76	1021	3.64	2.77	0.76	1067
27	20	4.29	2.74	0.64	974	4.11	2.63	0.64	1032	3.99	2.55	0.64	1056	3.85	2.46	0.64	1102
27	22	4.46	2.32	0.52	1009	4.31	2.24	0.52	1073	4.20	2.18	0.52	1102	4.03	2.09	0.52	1148
27	24	4.69	1.88	0.40	1056	4.52	1.81	0.40	1114	4.41	1.76	0.40	1148	4.27	1.71	0.40	1206
27	26	4.83	1.35	0.28	1114	4.69	1.31	0.28	1172	4.62	1.29	0.28	1206	4.48	1.25	0.28	1241
28	18	4.11	3.29	0.80	928	3.94	3.15	0.80	974	3.78	3.02	0.80	1021	3.64	2.91	0.80	1067
28	20	4.29	2.92	0.68	974	4.11	2.80	0.68	1032	3.99	2.71	0.68	1056	3.85	2.62	0.68	1102
28	22	4.46	2.50	0.56	1009	4.31	2.41	0.56	1073	4.20	2.35	0.56	1102	4.03	2.25	0.56	1148
28	24	4.69	2.06	0.44	1056	4.52	1.99	0.44	1114	4.41	1.94	0.44	1148	4.27	1.88	0.44	1206
28	26	4.83	1.55	0.32	1114	4.69	1.50	0.32	1172	4.62	1.48	0.32	1206	4.48	1.43	0.32	1241
29	18	4.11	3.45	0.84	928	3.94	3.31	0.84	974	3.78	3.18	0.84	1021	3.64	3.06	0.84	1067
29	20	4.29	3.09	0.72	974	4.11	2.96	0.72	1032	3.99	2.87	0.72	1056	3.85	2.77	0.72	1102
29	22	4.46	2.68	0.60	1009	4.31	2.58	0.60	1073	4.20	2.52	0.60	1102	4.03	2.42	0.60	1148
29	24	4.69	2.25	0.48	1056	4.52	2.17	0.48	1114	4.41	2.12	0.48	1148	4.27	2.05	0.48	1206
29	26	4.83	1.74	0.36	1114	4.69	1.69	0.36	1172	4.62	1.66	0.36	1206	4.48	1.61	0.36	1241
30	18	4.11	3.62	0.88	928	3.94	3.47	0.88	974	3.78	3.33	0.88	1021	3.64	3.20	0.88	1067
30	20	4.29	3.26	0.76	974	4.11	3.13	0.76	1032	3.99	3.03	0.76	1056	3.85	2.93	0.76	1102
30	22	4.46	2.86	0.64	1009	4.31	2.76	0.64	1073	4.20	2.69	0.64	1102	4.03	2.58	0.64	1148
30	24	4.69	2.44	0.52	1056	4.52	2.35	0.52	1114	4.41	2.29	0.52	1148	4.27	2.22	0.52	1206
30	26	4.83	1.93	0.40	1114	4.69	1.88	0.40	1172	4.62	1.85	0.40	1206	4.48	1.79	0.40	1241
31	18	4.11	3.78	0.92	928	3.94	3.62	0.92	974	3.78	3.48	0.92	1021	3.64	3.35	0.92	1067
31	20	4.29	3.43	0.80	974	4.11	3.29	0.80	1032	3.99	3.19	0.80	1056	3.85	3.08	0.80	1102
31	22	4.46	3.03	0.68	1009	4.31	2.93	0.68	1073	4.20	2.86	0.68	1102	4.03	2.74	0.68	1148
31	24	4.69	2.63	0.56	1056	4.52	2.53	0.56	1114	4.41	2.47	0.56	1148	4.27	2.39	0.56	1206
31	26	4.83	2.13	0.44	1114	4.69	2.06	0.44	1172	4.62	2.03	0.44	1206	4.48	1.97	0.44	1241
32	18	4.11	3.95	0.96	928	3.94	3.78	0.96	974	3.78	3.63	0.96	1021	3.64	3.49	0.96	1067
32	20	4.29	3.60	0.84	974	4.11	3.45	0.84	1032	3.99	3.35	0.84	1056	3.85	3.23	0.84	1102
32	22	4.46	3.21	0.72	1009	4.31	3.10	0.72	1073	4.20	3.02	0.72	1102	4.03	2.90	0.72	1148
32	24	4.69	2.81	0.60	1056	4.52	2.71	0.60	1114	4.41	2.65	0.60	1148	4.27	2.56	0.60	1206
32	26	4.83	2.32	0.48	1114	4.69	2.25	0.48	1172	4.62	2.22	0.48	1206	4.48	2.15	0.48	1241

NOTE Q :Total capacity (kW) SHF :Sensible heat factor DB :Dry-bulb temperature
SHC :Sensible heat capacity (kW) INPUT :Total power input (W) WB :Wet-bulb temperature

COOL operation (230V)

MCFH-A12WV : MUH-A12YV

CAPACITY :3.5(KW) SHF :0.70 INPUT :1160(W)

		OUTDOOR DB(℃)											
INDOOR DB(℃)	INDOOR WB(℃)	35				40				43			
		Q	SHC	SHF	INPUT	Q	SHC	SHF	INPUT	Q	SHC	SHF	INPUT
21	18	3.43	1.78	0.52	1137	3.15	1.64	0.52	1206	3.03	1.57	0.52	1230
21	20	3.61	1.44	0.40	1183	3.36	1.34	0.40	1241	3.24	1.30	0.40	1276
22	18	3.43	1.92	0.56	1137	3.15	1.76	0.56	1206	3.03	1.70	0.56	1230
22	20	3.61	1.59	0.44	1183	3.36	1.48	0.44	1241	3.24	1.42	0.44	1276
22	22	3.82	1.22	0.32	1230	3.57	1.14	0.32	1299	3.45	1.10	0.32	1322
23	18	3.43	2.06	0.60	1137	3.15	1.89	0.60	1206	3.03	1.82	0.60	1230
23	20	3.61	1.73	0.48	1183	3.36	1.61	0.48	1241	3.24	1.55	0.48	1276
23	22	3.82	1.37	0.36	1230	3.57	1.29	0.36	1299	3.45	1.24	0.36	1322
24	18	3.43	2.20	0.64	1137	3.15	2.02	0.64	1206	3.03	1.94	0.64	1230
24	20	3.61	1.87	0.52	1183	3.36	1.75	0.52	1241	3.24	1.68	0.52	1276
24	22	3.82	1.53	0.40	1230	3.57	1.43	0.40	1299	3.45	1.38	0.40	1322
24	24	4.03	1.13	0.28	1276	3.78	1.06	0.28	1334	3.68	1.03	0.28	1363
25	18	3.43	2.33	0.68	1137	3.15	2.14	0.68	1206	3.03	2.06	0.68	1230
25	20	3.61	2.02	0.56	1183	3.36	1.88	0.56	1241	3.24	1.81	0.56	1276
25	22	3.82	1.68	0.44	1230	3.57	1.57	0.44	1299	3.45	1.52	0.44	1322
25	24	4.03	1.29	0.32	1276	3.78	1.21	0.32	1334	3.68	1.18	0.32	1363
26	18	3.43	2.47	0.72	1137	3.15	2.27	0.72	1206	3.03	2.18	0.72	1230
26	20	3.61	2.16	0.60	1183	3.36	2.02	0.60	1241	3.24	1.94	0.60	1276
26	22	3.82	1.83	0.48	1230	3.57	1.71	0.48	1299	3.45	1.65	0.48	1322
26	24	4.03	1.45	0.36	1276	3.78	1.36	0.36	1334	3.68	1.32	0.36	1363
26	26	4.24	1.02	0.24	1322	3.99	0.96	0.24	1380	3.87	0.93	0.24	1409
27	18	3.43	2.61	0.76	1137	3.15	2.39	0.76	1206	3.03	2.30	0.76	1230
27	20	3.61	2.31	0.64	1183	3.36	2.15	0.64	1241	3.24	2.07	0.64	1276
27	22	3.82	1.98	0.52	1230	3.57	1.86	0.52	1299	3.45	1.79	0.52	1322
27	24	4.03	1.61	0.40	1276	3.78	1.51	0.40	1334	3.68	1.47	0.40	1363
27	26	4.24	1.19	0.28	1322	3.99	1.12	0.28	1380	3.87	1.08	0.28	1409
28	18	3.43	2.74	0.80	1137	3.15	2.52	0.80	1206	3.03	2.42	0.80	1230
28	20	3.61	2.45	0.68	1183	3.36	2.28	0.68	1241	3.24	2.20	0.68	1276
28	22	3.82	2.14	0.56	1230	3.57	2.00	0.56	1299	3.45	1.93	0.56	1322
28	24	4.03	1.77	0.44	1276	3.78	1.66	0.44	1334	3.68	1.62	0.44	1363
28	26	4.24	1.36	0.32	1322	3.99	1.28	0.32	1380	3.87	1.24	0.32	1409
29	18	3.43	2.88	0.84	1137	3.15	2.65	0.84	1206	3.03	2.54	0.84	1230
29	20	3.61	2.60	0.72	1183	3.36	2.42	0.72	1241	3.24	2.33	0.72	1276
29	22	3.82	2.29	0.60	1230	3.57	2.14	0.60	1299	3.45	2.07	0.60	1322
29	24	4.03	1.93	0.48	1276	3.78	1.81	0.48	1334	3.68	1.76	0.48	1363
29	26	4.24	1.52	0.36	1322	3.99	1.44	0.36	1380	3.87	1.39	0.36	1409
30	18	3.43	3.02	0.88	1137	3.15	2.77	0.88	1206	3.03	2.66	0.88	1230
30	20	3.61	2.74	0.76	1183	3.36	2.55	0.76	1241	3.24	2.46	0.76	1276
30	22	3.82	2.44	0.64	1230	3.57	2.28	0.64	1299	3.45	2.21	0.64	1322
30	24	4.03	2.09	0.52	1276	3.78	1.97	0.52	1334	3.68	1.91	0.52	1363
30	26	4.24	1.69	0.40	1322	3.99	1.60	0.40	1380	3.87	1.55	0.40	1409
31	18	3.43	3.16	0.92	1137	3.15	2.90	0.92	1206	3.03	2.79	0.92	1230
31	20	3.61	2.88	0.80	1183	3.36	2.69	0.80	1241	3.24	2.59	0.80	1276
31	22	3.82	2.59	0.68	1230	3.57	2.43	0.68	1299	3.45	2.34	0.68	1322
31	24	4.03	2.25	0.56	1276	3.78	2.12	0.56	1334	3.68	2.06	0.56	1363
31	26	4.24	1.86	0.44	1322	3.99	1.76	0.44	1380	3.87	1.70	0.44	1409
32	18	3.43	3.29	0.96	1137	3.15	3.02	0.96	1206	3.03	2.91	0.96	1230
32	20	3.61	3.03	0.84	1183	3.36	2.82	0.84	1241	3.24	2.72	0.84	1276
32	22	3.82	2.75	0.72	1230	3.57	2.57	0.72	1299	3.45	2.48	0.72	1322
32	24	4.03	2.42	0.60	1276	3.78	2.27	0.60	1334	3.68	2.21	0.60	1363
32	26	4.24	2.03	0.48	1322	3.99	1.92	0.48	1380	3.87	1.86	0.48	1409

NOTE Q :Total capacity (kW) SHF :Sensible heat factor DB :Dry-bulb temperature
SHC :Sensible heat capacity (kW) INPUT :Total power input (W) WB :Wet-bulb temperature

COOL operation(230V)

MCFH-A18WV : MUCFH-A18WV

CAPACITY :4.8(KW) SHF :0.65 INPUT :1810(W)

		OUTDOOR DB(℃)															
INDOOR DB(℃)	INDOOR WB(℃)	21				25				27				30			
		Q	SHC	SHF	INPUT	Q	SHC	SHF	INPUT	Q	SHC	SHF	INPUT	Q	SHC	SHF	INPUT
21	18	5.64	2.65	0.47	1448	5.40	2.54	0.47	1520	5.18	2.44	0.47	1593	4.99	2.35	0.47	1665
21	20	5.88	2.06	0.35	1520	5.64	1.97	0.35	1611	5.47	1.92	0.35	1647	5.28	1.85	0.35	1720
22	18	5.64	2.88	0.51	1448	5.40	2.75	0.51	1520	5.18	2.64	0.51	1593	4.99	2.55	0.51	1665
22	20	5.88	2.29	0.39	1520	5.64	2.20	0.39	1611	5.47	2.13	0.39	1647	5.28	2.06	0.39	1720
22	22	6.12	1.65	0.27	1575	5.90	1.59	0.27	1674	5.76	1.56	0.27	1720	5.52	1.49	0.27	1792
23	18	5.64	3.10	0.55	1448	5.40	2.97	0.55	1520	5.18	2.85	0.55	1593	4.99	2.75	0.55	1665
23	20	5.88	2.53	0.43	1520	5.64	2.43	0.43	1611	5.47	2.35	0.43	1647	5.28	2.27	0.43	1720
23	22	6.12	1.90	0.31	1575	5.90	1.83	0.31	1674	5.76	1.79	0.31	1720	5.52	1.71	0.31	1792
24	18	5.64	3.33	0.59	1448	5.40	3.19	0.59	1520	5.18	3.06	0.59	1593	4.99	2.95	0.59	1665
24	20	5.88	2.76	0.47	1520	5.64	2.65	0.47	1611	5.47	2.57	0.47	1647	5.28	2.48	0.47	1720
24	22	6.12	2.14	0.35	1575	5.90	2.07	0.35	1674	5.76	2.02	0.35	1720	5.52	1.93	0.35	1792
24	24	6.43	1.48	0.23	1647	6.19	1.42	0.23	1738	6.05	1.39	0.23	1792	5.86	1.35	0.23	1882
25	18	5.64	3.55	0.63	1448	5.40	3.40	0.63	1520	5.18	3.27	0.63	1593	4.99	3.14	0.63	1665
25	20	5.88	3.00	0.51	1520	5.64	2.88	0.51	1611	5.47	2.79	0.51	1647	5.28	2.69	0.51	1720
25	22	6.12	2.39	0.39	1575	5.90	2.30	0.39	1674	5.76	2.25	0.39	1720	5.52	2.15	0.39	1792
25	24	6.43	1.74	0.27	1647	6.19	1.67	0.27	1738	6.05	1.63	0.27	1792	5.86	1.58	0.27	1882
26	18	5.64	3.78	0.67	1448	5.40	3.62	0.67	1520	5.18	3.47	0.67	1593	4.99	3.34	0.67	1665
26	20	5.88	3.23	0.55	1520	5.64	3.10	0.55	1611	5.47	3.01	0.55	1647	5.28	2.90	0.55	1720
26	22	6.12	2.63	0.43	1575	5.90	2.54	0.43	1674	5.76	2.48	0.43	1720	5.52	2.37	0.43	1792
26	24	6.43	1.99	0.31	1647	6.19	1.92	0.31	1738	6.05	1.87	0.31	1792	5.86	1.82	0.31	1882
26	26	6.62	1.26	0.19	1738	6.43	1.22	0.19	1828	6.34	1.20	0.19	1882	6.14	1.17	0.19	1937
27	18	5.64	4.00	0.71	1448	5.40	3.83	0.71	1520	5.18	3.68	0.71	1593	4.99	3.54	0.71	1665
27	20	5.88	3.47	0.59	1520	5.64	3.33	0.59	1611	5.47	3.23	0.59	1647	5.28	3.12	0.59	1720
27	22	6.12	2.88	0.47	1575	5.90	2.77	0.47	1674	5.76	2.71	0.47	1720	5.52	2.59	0.47	1792
27	24	6.43	2.25	0.35	1647	6.19	2.17	0.35	1738	6.05	2.12	0.35	1792	5.86	2.05	0.35	1882
27	26	6.62	1.52	0.23	1738	6.43	1.48	0.23	1828	6.34	1.46	0.23	1882	6.14	1.41	0.23	1937
28	18	5.64	4.23	0.75	1448	5.40	4.05	0.75	1520	5.18	3.89	0.75	1593	4.99	3.74	0.75	1665
28	20	5.88	3.70	0.63	1520	5.64	3.55	0.63	1611	5.47	3.45	0.63	1647	5.28	3.33	0.63	1720
28	22	6.12	3.12	0.51	1575	5.90	3.01	0.51	1674	5.76	2.94	0.51	1720	5.52	2.82	0.51	1792
28	24	6.43	2.51	0.39	1647	6.19	2.41	0.39	1738	6.05	2.36	0.39	1792	5.86	2.28	0.39	1882
28	26	6.62	1.79	0.27	1738	6.43	1.74	0.27	1828	6.34	1.71	0.27	1882	6.14	1.66	0.27	1937
29	18	5.64	4.46	0.79	1448	5.40	4.27	0.79	1520	5.18	4.10	0.79	1593	4.99	3.94	0.79	1665
29	20	5.88	3.94	0.67	1520	5.64	3.78	0.67	1611	5.47	3.67	0.67	1647	5.28	3.54	0.67	1720
29	22	6.12	3.37	0.55	1575	5.90	3.25	0.55	1674	5.76	3.17	0.55	1720	5.52	3.04	0.55	1792
29	24	6.43	2.77	0.43	1647	6.19	2.66	0.43	1738	6.05	2.60	0.43	1792	5.86	2.52	0.43	1882
29	26	6.62	2.05	0.31	1738	6.43	1.99	0.31	1828	6.34	1.96	0.31	1882	6.14	1.90	0.31	1937
30	18	5.64	4.68	0.83	1448	5.40	4.48	0.83	1520	5.18	4.30	0.83	1593	4.99	4.14	0.83	1665
30	20	5.88	4.17	0.71	1520	5.64	4.00	0.71	1611	5.47	3.89	0.71	1647	5.28	3.75	0.71	1720
30	22	6.12	3.61	0.59	1575	5.90	3.48	0.59	1674	5.76	3.40	0.59	1720	5.52	3.26	0.59	1792
30	24	6.43	3.02	0.47	1647	6.19	2.91	0.47	1738	6.05	2.84	0.47	1792	5.86	2.75	0.47	1882
30	26	6.62	2.32	0.35	1738	6.43	2.25	0.35	1828	6.34	2.22	0.35	1882	6.14	2.15	0.35	1937
31	18	5.64	4.91	0.87	1448	5.40	4.70	0.87	1520	5.18	4.51	0.87	1593	4.99	4.34	0.87	1665
31	20	5.88	4.41	0.75	1520	5.64	4.23	0.75	1611	5.47	4.10	0.75	1647	5.28	3.96	0.75	1720
31	22	6.12	3.86	0.63	1575	5.90	3.72	0.63	1674	5.76	3.63	0.63	1720	5.52	3.48	0.63	1792
31	24	6.43	3.28	0.51	1647	6.19	3.16	0.51	1738	6.05	3.08	0.51	1792	5.86	2.99	0.51	1882
31	26	6.62	2.58	0.39	1738	6.43	2.51	0.39	1828	6.34	2.47	0.39	1882	6.14	2.40	0.39	1937
32	18	5.64	5.13	0.91	1448	5.40	4.91	0.91	1520	5.18	4.72	0.91	1593	4.99	4.54	0.91	1665
32	20	5.88	4.65	0.79	1520	5.64	4.46	0.79	1611	5.47	4.32	0.79	1647	5.28	4.17	0.79	1720
32	22	6.12	4.10	0.67	1575	5.90	3.96	0.67	1674	5.76	3.86	0.67	1720	5.52	3.70	0.67	1792
32	24	6.43	3.54	0.55	1647	6.19	3.41	0.55	1738	6.05	3.33	0.55	1792	5.86	3.22	0.55	1882
32	26	6.62	2.85	0.43	1738	6.43	2.77	0.43	1828	6.34	2.72	0.43	1882	6.14	2.64	0.43	1937

NOTE Q : Total capacity (kW) SHF : Sensible heat factor DB : Dry-bulb temperature
SHC : Sensible heat capacity (kW) INPUT : Total power input (W) WB : Wet-bulb temperature

COOL operation(230V)

MCFH-A18WV : MUCFH-A18WV

CAPACITY :4.8(KW) SHF :0.65 INPUT :1810(W)

		OUTDOOR DB(℃)											
INDOOR DB(℃)	INDOOR WB(℃)	35				40				43			
		Q	SHC	SHF	INPUT	Q	SHC	SHF	INPUT	Q	SHC	SHF	INPUT
21	18	4.70	2.21	0.47	1774	4.32	2.03	0.47	1882	4.15	1.95	0.47	1919
21	20	4.94	1.73	0.35	1846	4.61	1.61	0.35	1937	4.44	1.55	0.35	1991
22	18	4.70	2.40	0.51	1774	4.32	2.20	0.51	1882	4.15	2.12	0.51	1919
22	20	4.94	1.93	0.39	1846	4.61	1.80	0.39	1937	4.44	1.73	0.39	1991
22	22	5.23	1.41	0.27	1919	4.90	1.32	0.27	2027	4.73	1.28	0.27	2063
23	18	4.70	2.59	0.55	1774	4.32	2.38	0.55	1882	4.15	2.28	0.55	1919
23	20	4.94	2.13	0.43	1846	4.61	1.98	0.43	1937	4.44	1.91	0.43	1991
23	22	5.23	1.62	0.31	1919	4.90	1.52	0.31	2027	4.73	1.47	0.31	2063
24	18	4.70	2.78	0.59	1774	4.32	2.55	0.59	1882	4.15	2.45	0.59	1919
24	20	4.94	2.32	0.47	1846	4.61	2.17	0.47	1937	4.44	2.09	0.47	1991
24	22	5.23	1.83	0.35	1919	4.90	1.71	0.35	2027	4.73	1.65	0.35	2063
24	24	5.52	1.27	0.23	1991	5.18	1.19	0.23	2082	5.04	1.16	0.23	2127
25	18	4.70	2.96	0.63	1774	4.32	2.72	0.63	1882	4.15	2.62	0.63	1919
25	20	4.94	2.52	0.51	1846	4.61	2.35	0.51	1937	4.44	2.26	0.51	1991
25	22	5.23	2.04	0.39	1919	4.90	1.91	0.39	2027	4.73	1.84	0.39	2063
25	24	5.52	1.49	0.27	1991	5.18	1.40	0.27	2082	5.04	1.36	0.27	2127
26	18	4.70	3.15	0.67	1774	4.32	2.89	0.67	1882	4.15	2.78	0.67	1919
26	20	4.94	2.72	0.55	1846	4.61	2.53	0.55	1937	4.44	2.44	0.55	1991
26	22	5.23	2.25	0.43	1919	4.90	2.11	0.43	2027	4.73	2.03	0.43	2063
26	24	5.52	1.71	0.31	1991	5.18	1.61	0.31	2082	5.04	1.56	0.31	2127
26	26	5.81	1.10	0.19	2063	5.47	1.04	0.19	2154	5.30	1.01	0.19	2199
27	18	4.70	3.34	0.71	1774	4.32	3.07	0.71	1882	4.15	2.95	0.71	1919
27	20	4.94	2.92	0.59	1846	4.61	2.72	0.59	1937	4.44	2.62	0.59	1991
27	22	5.23	2.46	0.47	1919	4.90	2.30	0.47	2027	4.73	2.22	0.47	2063
27	24	5.52	1.93	0.35	1991	5.18	1.81	0.35	2082	5.04	1.76	0.35	2127
27	26	5.81	1.34	0.23	2063	5.47	1.26	0.23	2154	5.30	1.22	0.23	2199
28	18	4.70	3.53	0.75	1774	4.32	3.24	0.75	1882	4.15	3.11	0.75	1919
28	20	4.94	3.11	0.63	1846	4.61	2.90	0.63	1937	4.44	2.80	0.63	1991
28	22	5.23	2.67	0.51	1919	4.90	2.50	0.51	2027	4.73	2.41	0.51	2063
28	24	5.52	2.15	0.39	1991	5.18	2.02	0.39	2082	5.04	1.97	0.39	2127
28	26	5.81	1.57	0.27	2063	5.47	1.48	0.27	2154	5.30	1.43	0.27	2199
29	18	4.70	3.72	0.79	1774	4.32	3.41	0.79	1882	4.15	3.28	0.79	1919
29	20	4.94	3.31	0.67	1846	4.61	3.09	0.67	1937	4.44	2.97	0.67	1991
29	22	5.23	2.88	0.55	1919	4.90	2.69	0.55	2027	4.73	2.60	0.55	2063
29	24	5.52	2.37	0.43	1991	5.18	2.23	0.43	2082	5.04	2.17	0.43	2127
29	26	5.81	1.80	0.31	2063	5.47	1.70	0.31	2154	5.30	1.64	0.31	2199
30	18	4.70	3.90	0.83	1774	4.32	3.59	0.83	1882	4.15	3.45	0.83	1919
30	20	4.94	3.51	0.71	1846	4.61	3.27	0.71	1937	4.44	3.15	0.71	1991
30	22	5.23	3.09	0.59	1919	4.90	2.89	0.59	2027	4.73	2.79	0.59	2063
30	24	5.52	2.59	0.47	1991	5.18	2.44	0.47	2082	5.04	2.37	0.47	2127
30	26	5.81	2.03	0.35	2063	5.47	1.92	0.35	2154	5.30	1.86	0.35	2199
31	18	4.70	4.09	0.87	1774	4.32	3.76	0.87	1882	4.15	3.61	0.87	1919
31	20	4.94	3.71	0.75	1846	4.61	3.46	0.75	1937	4.44	3.33	0.75	1991
31	22	5.23	3.30	0.63	1919	4.90	3.08	0.63	2027	4.73	2.98	0.63	2063
31	24	5.52	2.82	0.51	1991	5.18	2.64	0.51	2082	5.04	2.57	0.51	2127
31	26	5.81	2.27	0.39	2063	5.47	2.13	0.39	2154	5.30	2.07	0.39	2199
32	18	4.70	4.28	0.91	1774	4.32	3.93	0.91	1882	4.15	3.78	0.91	1919
32	20	4.94	3.91	0.79	1846	4.61	3.64	0.79	1937	4.44	3.51	0.79	1991
32	22	5.23	3.51	0.67	1919	4.90	3.28	0.67	2027	4.73	3.17	0.67	2063
32	24	5.52	3.04	0.55	1991	5.18	2.85	0.55	2082	5.04	2.77	0.55	2127
32	26	5.81	2.50	0.43	2063	5.47	2.35	0.43	2154	5.30	2.28	0.43	2199

NOTE Q : Total capacity (kW) SHF : Sensible heat factor DB : Dry-bulb temperature
SHC : Sensible heat capacity (kW) INPUT : Total power input (W) WB : Wet-bulb temperature

COOL operation(230V)

MCFH-A24WV : MUCFH-A24WV

CAPACITY :6.0(KW) SHF :0.64 INPUT :2450(W)

		OUTDOOR DB(℃)															
INDOOR DB(℃)	INDOOR WB(℃)	21				25				27				30			
		Q	SHC	SHF	INPUT	Q	SHC	SHF	INPUT	Q	SHC	SHF	INPUT	Q	SHC	SHF	INPUT
21	18	7.05	3.24	0.46	1960	6.75	3.11	0.46	2058	6.48	2.98	0.46	2156	6.24	2.87	0.46	2254
21	20	7.35	2.50	0.34	2058	7.05	2.40	0.34	2181	6.84	2.33	0.34	2230	6.60	2.24	0.34	2328
22	18	7.05	3.53	0.50	1960	6.75	3.38	0.50	2058	6.48	3.24	0.50	2156	6.24	3.12	0.50	2254
22	20	7.35	2.79	0.38	2058	7.05	2.68	0.38	2181	6.84	2.60	0.38	2230	6.60	2.51	0.38	2328
22	22	7.65	1.99	0.26	2132	7.38	1.92	0.26	2266	7.20	1.87	0.26	2328	6.90	1.79	0.26	2426
23	18	7.05	3.81	0.54	1960	6.75	3.65	0.54	2058	6.48	3.50	0.54	2156	6.24	3.37	0.54	2254
23	20	7.35	3.09	0.42	2058	7.05	2.96	0.42	2181	6.84	2.87	0.42	2230	6.60	2.77	0.42	2328
23	22	7.65	2.30	0.30	2132	7.38	2.21	0.30	2266	7.20	2.16	0.30	2328	6.90	2.07	0.30	2426
24	18	7.05	4.09	0.58	1960	6.75	3.92	0.58	2058	6.48	3.76	0.58	2156	6.24	3.62	0.58	2254
24	20	7.35	3.38	0.46	2058	7.05	3.24	0.46	2181	6.84	3.15	0.46	2230	6.60	3.04	0.46	2328
24	22	7.65	2.60	0.34	2132	7.38	2.51	0.34	2266	7.20	2.45	0.34	2328	6.90	2.35	0.34	2426
24	24	8.04	1.77	0.22	2230	7.74	1.70	0.22	2352	7.56	1.66	0.22	2426	7.32	1.61	0.22	2548
25	18	7.05	4.37	0.62	1960	6.75	4.19	0.62	2058	6.48	4.02	0.62	2156	6.24	3.87	0.62	2254
25	20	7.35	3.68	0.50	2058	7.05	3.53	0.50	2181	6.84	3.42	0.50	2230	6.60	3.30	0.50	2328
25	22	7.65	2.91	0.38	2132	7.38	2.80	0.38	2266	7.20	2.74	0.38	2328	6.90	2.62	0.38	2426
25	24	8.04	2.09	0.26	2230	7.74	2.01	0.26	2352	7.56	1.97	0.26	2426	7.32	1.90	0.26	2548
26	18	7.05	4.65	0.66	1960	6.75	4.46	0.66	2058	6.48	4.28	0.66	2156	6.24	4.12	0.66	2254
26	20	7.35	3.97	0.54	2058	7.05	3.81	0.54	2181	6.84	3.69	0.54	2230	6.60	3.56	0.54	2328
26	22	7.65	3.21	0.42	2132	7.38	3.10	0.42	2266	7.20	3.02	0.42	2328	6.90	2.90	0.42	2426
26	24	8.04	2.41	0.30	2230	7.74	2.32	0.30	2352	7.56	2.27	0.30	2426	7.32	2.20	0.30	2548
26	26	8.28	1.49	0.18	2352	8.04	1.45	0.18	2475	7.92	1.43	0.18	2548	7.68	1.38	0.18	2622
27	18	7.05	4.94	0.70	1960	6.75	4.73	0.70	2058	6.48	4.54	0.70	2156	6.24	4.37	0.70	2254
27	20	7.35	4.26	0.58	2058	7.05	4.09	0.58	2181	6.84	3.97	0.58	2230	6.60	3.83	0.58	2328
27	22	7.65	3.52	0.46	2132	7.38	3.39	0.46	2266	7.20	3.31	0.46	2328	6.90	3.17	0.46	2426
27	24	8.04	2.73	0.34	2230	7.74	2.63	0.34	2352	7.56	2.57	0.34	2426	7.32	2.49	0.34	2548
27	26	8.28	1.82	0.22	2352	8.04	1.77	0.22	2475	7.92	1.74	0.22	2548	7.68	1.69	0.22	2622
28	18	7.05	5.22	0.74	1960	6.75	5.00	0.74	2058	6.48	4.80	0.74	2156	6.24	4.62	0.74	2254
28	20	7.35	4.56	0.62	2058	7.05	4.37	0.62	2181	6.84	4.24	0.62	2230	6.60	4.09	0.62	2328
28	22	7.65	3.83	0.50	2132	7.38	3.69	0.50	2266	7.20	3.60	0.50	2328	6.90	3.45	0.50	2426
28	24	8.04	3.06	0.38	2230	7.74	2.94	0.38	2352	7.56	2.87	0.38	2426	7.32	2.78	0.38	2548
28	26	8.28	2.15	0.26	2352	8.04	2.09	0.26	2475	7.92	2.06	0.26	2548	7.68	2.00	0.26	2622
29	18	7.05	5.50	0.78	1960	6.75	5.27	0.78	2058	6.48	5.05	0.78	2156	6.24	4.87	0.78	2254
29	20	7.35	4.85	0.66	2058	7.05	4.65	0.66	2181	6.84	4.51	0.66	2230	6.60	4.36	0.66	2328
29	22	7.65	4.13	0.54	2132	7.38	3.99	0.54	2266	7.20	3.89	0.54	2328	6.90	3.73	0.54	2426
29	24	8.04	3.38	0.42	2230	7.74	3.25	0.42	2352	7.56	3.18	0.42	2426	7.32	3.07	0.42	2548
29	26	8.28	2.48	0.30	2352	8.04	2.41	0.30	2475	7.92	2.38	0.30	2548	7.68	2.30	0.30	2622
30	18	7.05	5.78	0.82	1960	6.75	5.54	0.82	2058	6.48	5.31	0.82	2156	6.24	5.12	0.82	2254
30	20	7.35	5.15	0.70	2058	7.05	4.94	0.70	2181	6.84	4.79	0.70	2230	6.60	4.62	0.70	2328
30	22	7.65	4.44	0.58	2132	7.38	4.28	0.58	2266	7.20	4.18	0.58	2328	6.90	4.00	0.58	2426
30	24	8.04	3.70	0.46	2230	7.74	3.56	0.46	2352	7.56	3.48	0.46	2426	7.32	3.37	0.46	2548
30	26	8.28	2.82	0.34	2352	8.04	2.73	0.34	2475	7.92	2.69	0.34	2548	7.68	2.61	0.34	2622
31	18	7.05	6.06	0.86	1960	6.75	5.81	0.86	2058	6.48	5.57	0.86	2156	6.24	5.37	0.86	2254
31	20	7.35	5.44	0.74	2058	7.05	5.22	0.74	2181	6.84	5.06	0.74	2230	6.60	4.88	0.74	2328
31	22	7.65	4.74	0.62	2132	7.38	4.58	0.62	2266	7.20	4.46	0.62	2328	6.90	4.28	0.62	2426
31	24	8.04	4.02	0.50	2230	7.74	3.87	0.50	2352	7.56	3.78	0.50	2426	7.32	3.66	0.50	2548
31	26	8.28	3.15	0.38	2352	8.04	3.06	0.38	2475	7.92	3.01	0.38	2548	7.68	2.92	0.38	2622
32	18	7.05	6.35	0.90	1960	6.75	6.08	0.90	2058	6.48	5.83	0.90	2156	6.24	5.62	0.90	2254
32	20	7.35	5.73	0.78	2058	7.05	5.50	0.78	2181	6.84	5.34	0.78	2230	6.60	5.15	0.78	2328
32	22	7.65	5.05	0.66	2132	7.38	4.87	0.66	2266	7.20	4.75	0.66	2328	6.90	4.55	0.66	2426
32	24	8.04	4.34	0.54	2230	7.74	4.18	0.54	2352	7.56	4.08	0.54	2426	7.32	3.95	0.54	2548
32	26	8.28	3.48	0.42	2352	8.04	3.38	0.42	2475	7.92	3.33	0.42	2548	7.68	3.23	0.42	2622

NOTE Q : Total capacity (kW) SHF : Sensible heat factor DB : Dry-bulb temperature
SHC : Sensible heat capacity (kW) INPUT : Total power input (W) WB : Wet-bulb temperature

COOL operation(230V)

MCFH-A24WV : MUCFH-A24WV

CAPACITY :6.0(KW) SHF :0.64 INPUT :2450(W)

		OUTDOOR DB(℃)											
INDOOR DB(℃)	INDOOR WB(℃)	35				40				43			
		Q	SHC	SHF	INPUT	Q	SHC	SHF	INPUT	Q	SHC	SHF	INPUT
21	18	5.88	2.70	0.46	2401	5.40	2.48	0.46	2548	5.19	2.39	0.46	2597
21	20	6.18	2.10	0.34	2499	5.76	1.96	0.34	2622	5.55	1.89	0.34	2695
22	18	5.88	2.94	0.50	2401	5.40	2.70	0.50	2548	5.19	2.60	0.50	2597
22	20	6.18	2.35	0.38	2499	5.76	2.19	0.38	2622	5.55	2.11	0.38	2695
22	22	6.54	1.70	0.26	2597	6.12	1.59	0.26	2744	5.91	1.54	0.26	2793
23	18	5.88	3.18	0.54	2401	5.40	2.92	0.54	2548	5.19	2.80	0.54	2597
23	20	6.18	2.60	0.42	2499	5.76	2.42	0.42	2622	5.55	2.33	0.42	2695
23	22	6.54	1.96	0.30	2597	6.12	1.84	0.30	2744	5.91	1.77	0.30	2793
24	18	5.88	3.41	0.58	2401	5.40	3.13	0.58	2548	5.19	3.01	0.58	2597
24	20	6.18	2.84	0.46	2499	5.76	2.65	0.46	2622	5.55	2.55	0.46	2695
24	22	6.54	2.22	0.34	2597	6.12	2.08	0.34	2744	5.91	2.01	0.34	2793
24	24	6.90	1.52	0.22	2695	6.48	1.43	0.22	2818	6.30	1.39	0.22	2879
25	18	5.88	3.65	0.62	2401	5.40	3.35	0.62	2548	5.19	3.22	0.62	2597
25	20	6.18	3.09	0.50	2499	5.76	2.88	0.50	2622	5.55	2.78	0.50	2695
25	22	6.54	2.49	0.38	2597	6.12	2.33	0.38	2744	5.91	2.25	0.38	2793
25	24	6.90	1.79	0.26	2695	6.48	1.68	0.26	2818	6.30	1.64	0.26	2879
26	18	5.88	3.88	0.66	2401	5.40	3.56	0.66	2548	5.19	3.43	0.66	2597
26	20	6.18	3.34	0.54	2499	5.76	3.11	0.54	2622	5.55	3.00	0.54	2695
26	22	6.54	2.75	0.42	2597	6.12	2.57	0.42	2744	5.91	2.48	0.42	2793
26	24	6.90	2.07	0.30	2695	6.48	1.94	0.30	2818	6.30	1.89	0.30	2879
26	26	7.26	1.31	0.18	2793	6.84	1.23	0.18	2916	6.63	1.19	0.18	2977
27	18	5.88	4.12	0.70	2401	5.40	3.78	0.70	2548	5.19	3.63	0.70	2597
27	20	6.18	3.58	0.58	2499	5.76	3.34	0.58	2622	5.55	3.22	0.58	2695
27	22	6.54	3.01	0.46	2597	6.12	2.82	0.46	2744	5.91	2.72	0.46	2793
27	24	6.90	2.35	0.34	2695	6.48	2.20	0.34	2818	6.30	2.14	0.34	2879
27	26	7.26	1.60	0.22	2793	6.84	1.50	0.22	2916	6.63	1.46	0.22	2977
28	18	5.88	4.35	0.74	2401	5.40	4.00	0.74	2548	5.19	3.84	0.74	2597
28	20	6.18	3.83	0.62	2499	5.76	3.57	0.62	2622	5.55	3.44	0.62	2695
28	22	6.54	3.27	0.50	2597	6.12	3.06	0.50	2744	5.91	2.96	0.50	2793
28	24	6.90	2.62	0.38	2695	6.48	2.46	0.38	2818	6.30	2.39	0.38	2879
28	26	7.26	1.89	0.26	2793	6.84	1.78	0.26	2916	6.63	1.72	0.26	2977
29	18	5.88	4.59	0.78	2401	5.40	4.21	0.78	2548	5.19	4.05	0.78	2597
29	20	6.18	4.08	0.66	2499	5.76	3.80	0.66	2622	5.55	3.66	0.66	2695
29	22	6.54	3.53	0.54	2597	6.12	3.30	0.54	2744	5.91	3.19	0.54	2793
29	24	6.90	2.90	0.42	2695	6.48	2.72	0.42	2818	6.30	2.65	0.42	2879
29	26	7.26	2.18	0.30	2793	6.84	2.05	0.30	2916	6.63	1.99	0.30	2977
30	18	5.88	4.82	0.82	2401	5.40	4.43	0.82	2548	5.19	4.26	0.82	2597
30	20	6.18	4.33	0.70	2499	5.76	4.03	0.70	2622	5.55	3.89	0.70	2695
30	22	6.54	3.79	0.58	2597	6.12	3.55	0.58	2744	5.91	3.43	0.58	2793
30	24	6.90	3.17	0.46	2695	6.48	2.98	0.46	2818	6.30	2.90	0.46	2879
30	26	7.26	2.47	0.34	2793	6.84	2.33	0.34	2916	6.63	2.25	0.34	2977
31	18	5.88	5.06	0.86	2401	5.40	4.64	0.86	2548	5.19	4.46	0.86	2597
31	20	6.18	4.57	0.74	2499	5.76	4.26	0.74	2622	5.55	4.11	0.74	2695
31	22	6.54	4.05	0.62	2597	6.12	3.79	0.62	2744	5.91	3.66	0.62	2793
31	24	6.90	3.45	0.50	2695	6.48	3.24	0.50	2818	6.30	3.15	0.50	2879
31	26	7.26	2.76	0.38	2793	6.84	2.60	0.38	2916	6.63	2.52	0.38	2977
32	18	5.88	5.29	0.90	2401	5.40	4.86	0.90	2548	5.19	4.67	0.90	2597
32	20	6.18	4.82	0.78	2499	5.76	4.49	0.78	2622	5.55	4.33	0.78	2695
32	22	6.54	4.32	0.66	2597	6.12	4.04	0.66	2744	5.91	3.90	0.66	2793
32	24	6.90	3.73	0.54	2695	6.48	3.50	0.54	2818	6.30	3.40	0.54	2879
32	26	7.26	3.05	0.42	2793	6.84	2.87	0.42	2916	6.63	2.78	0.42	2977

NOTE Q : Total capacity (kW) SHF : Sensible heat factor DB : Dry-bulb temperature
SHC : Sensible heat capacity (kW) INPUT : Total power input (W) WB : Wet-bulb temperature

HEAT operation (230V)

MCFH-A12WV : MUH-A12YV

CAPACITY : 3.7(KW) INPUT : 1020(W)

	OUTDOOR WB(℃)													
INDOOR	-10		-5		0		5		10		15		20	
DB(℃)	Q	INPUT	Q	INPUT	Q	INPUT	Q	INPUT	Q	INPUT	Q	INPUT	Q	INPUT
15	2.33	663	2.81	796	3.29	898	3.77	969	4.26	1030	4.70	1061	5.18	1081
21	2.22	714	2.66	847	3.15	938	3.59	1010	4.07	1061	4.51	1091	4.98	1132
26	2.00	765	2.48	898	2.92	989	3.40	1061	3.89	1112	4.33	1142	4.81	1173

MCFH-A18WV : MUCFH-A18WV

CAPACITY :5.0(KW) INPUT :1890(W)

	OUTDOOR WB(℃)													
INDOOR	-10		-5		0		5		10		15		20	
DB(℃)	Q	INPUT	Q	INPUT	Q	INPUT	Q	INPUT	Q	INPUT	Q	INPUT	Q	INPUT
15	3.15	1229	3.80	1474	4.45	1663	5.10	1796	5.75	1909	6.35	1966	7.00	2003
21	3.00	1323	3.60	1569	4.25	1739	4.85	1871	5.50	1966	6.10	2022	6.73	2098
26	2.70	1418	3.35	1663	3.95	1833	4.60	1966	5.25	2060	5.85	2117	6.50	2174

MCFH-A24WV : MUCFH-A24WV

CAPACITY :6.8(KW) INPUT :2720(W)

	OUTDOOR WB(℃)													
INDOOR	-10		-5		0		5		10		15		20	
DB(℃)	Q	INPUT	Q	INPUT	Q	INPUT	Q	INPUT	Q	INPUT	Q	INPUT	Q	INPUT
15	4.28	1768	5.17	2122	6.05	2394	6.94	2584	7.82	2747	8.64	2829	9.52	2883
21	4.08	1904	4.90	2258	5.78	2502	6.60	2693	7.48	2829	8.30	2910	9.15	3019
26	3.67	2040	4.56	2394	5.37	2638	6.26	2829	7.14	2965	7.96	3046	8.84	3128

NOTE Q :Total capacity (kW) INPUT:Total power input (W) DB : Dry-bulb temperature WB : Wet-bulb temperature

C.2.6.3 Inverter Heat Pump

COOL operation Rated frequency 69Hz

MCFZ-A12WV : MUZ-A12YV MUZ-A12YVH

CAPACITY:3.5(kW) SHF:0.76 INPUT:1090(W)

		OUTDOOR DB(℃)															
INDOOR DB(℃)	INDOOR WB(℃)	21				25				27				30			
		Q	SHC	SHF	INPUT	Q	SHC	SHF	INPUT	Q	SHC	SHF	INPUT	Q	SHC	SHF	INPUT
21	18	4.11	2.39	0.58	872	3.94	2.28	0.58	916	3.78	2.19	0.58	959	3.64	2.11	0.58	1003
21	20	4.29	1.97	0.46	916	4.11	1.89	0.46	970	3.99	1.84	0.46	992	3.85	1.77	0.46	1036
22	18	4.11	2.55	0.62	872	3.94	2.44	0.62	916	3.78	2.34	0.62	959	3.64	2.26	0.62	1003
22	20	4.29	2.14	0.50	916	4.11	2.06	0.50	970	3.99	2.00	0.50	992	3.85	1.93	0.50	1036
22	22	4.46	1.70	0.38	948	4.31	1.64	0.38	1008	4.20	1.60	0.38	1036	4.03	1.53	0.38	1079
23	18	4.11	2.71	0.66	872	3.94	2.60	0.66	916	3.78	2.49	0.66	959	3.64	2.40	0.66	1003
23	20	4.29	2.32	0.54	916	4.11	2.22	0.54	970	3.99	2.15	0.54	992	3.85	2.08	0.54	1036
23	22	4.46	1.87	0.42	948	4.31	1.81	0.42	1008	4.20	1.76	0.42	1036	4.03	1.69	0.42	1079
24	18	4.11	2.88	0.70	872	3.94	2.76	0.70	916	3.78	2.65	0.70	959	3.64	2.55	0.70	1003
24	20	4.29	2.49	0.58	916	4.11	2.39	0.58	970	3.99	2.31	0.58	992	3.85	2.23	0.58	1036
24	22	4.46	2.05	0.46	948	4.31	1.98	0.46	1008	4.20	1.93	0.46	1036	4.03	1.85	0.46	1079
24	24	4.69	1.59	0.34	992	4.52	1.54	0.34	1046	4.41	1.50	0.34	1079	4.27	1.45	0.34	1134
25	18	4.11	3.04	0.74	872	3.94	2.91	0.74	916	3.78	2.80	0.74	959	3.64	2.69	0.74	1003
25	20	4.29	2.66	0.62	916	4.11	2.55	0.62	970	3.99	2.47	0.62	992	3.85	2.39	0.62	1036
25	22	4.46	2.23	0.50	948	4.31	2.15	0.50	1008	4.20	2.10	0.50	1036	4.03	2.01	0.50	1079
25	24	4.69	1.78	0.38	992	4.52	1.72	0.38	1046	4.41	1.68	0.38	1079	4.27	1.62	0.38	1134
26	18	4.11	3.21	0.78	872	3.94	3.07	0.78	916	3.78	2.95	0.78	959	3.64	2.84	0.78	1003
26	20	4.29	2.83	0.66	916	4.11	2.71	0.66	970	3.99	2.63	0.66	992	3.85	2.54	0.66	1036
26	22	4.46	2.41	0.54	948	4.31	2.32	0.54	1008	4.20	2.27	0.54	1036	4.03	2.17	0.54	1079
26	24	4.69	1.97	0.42	992	4.52	1.90	0.42	1046	4.41	1.85	0.42	1079	4.27	1.79	0.42	1134
26	26	4.83	1.45	0.30	1046	4.69	1.41	0.30	1101	4.62	1.39	0.30	1134	4.48	1.34	0.30	1166
27	18	4.11	3.37	0.82	872	3.94	3.23	0.82	916	3.78	3.10	0.82	959	3.64	2.98	0.82	1003
27	20	4.29	3.00	0.70	916	4.11	2.88	0.70	970	3.99	2.79	0.70	992	3.85	2.70	0.70	1036
27	22	4.46	2.59	0.58	948	4.31	2.50	0.58	1008	4.20	2.44	0.58	1036	4.03	2.33	0.58	1079
27	24	4.69	2.16	0.46	992	4.52	2.08	0.46	1046	4.41	2.03	0.46	1079	4.27	1.96	0.46	1134
27	26	4.83	1.64	0.34	1046	4.69	1.59	0.34	1101	4.62	1.57	0.34	1134	4.48	1.52	0.34	1166
28	18	4.11	3.54	0.86	872	3.94	3.39	0.86	916	3.78	3.25	0.86	959	3.64	3.13	0.86	1003
28	20	4.29	3.17	0.74	916	4.11	3.04	0.74	970	3.99	2.95	0.74	992	3.85	2.85	0.74	1036
28	22	4.46	2.77	0.62	948	4.31	2.67	0.62	1008	4.20	2.60	0.62	1036	4.03	2.50	0.62	1079
28	24	4.69	2.35	0.50	992	4.52	2.26	0.50	1046	4.41	2.21	0.50	1079	4.27	2.14	0.50	1134
28	26	4.83	1.84	0.38	1046	4.69	1.78	0.38	1101	4.62	1.76	0.38	1134	4.48	1.70	0.38	1166
29	18	4.11	3.70	0.90	872	3.94	3.54	0.90	916	3.78	3.40	0.90	959	3.64	3.28	0.90	1003
29	20	4.29	3.34	0.78	916	4.11	3.21	0.78	970	3.99	3.11	0.78	992	3.85	3.00	0.78	1036
29	22	4.46	2.95	0.66	948	4.31	2.84	0.66	1008	4.20	2.77	0.66	1036	4.03	2.66	0.66	1079
29	24	4.69	2.53	0.54	992	4.52	2.44	0.54	1046	4.41	2.38	0.54	1079	4.27	2.31	0.54	1134
29	26	4.83	2.03	0.42	1046	4.69	1.97	0.42	1101	4.62	1.94	0.42	1134	4.48	1.88	0.42	1166
30	18	4.11	3.87	0.94	872	3.94	3.70	0.94	916	3.78	3.55	0.94	959	3.64	3.42	0.94	1003
30	20	4.29	3.52	0.82	916	4.11	3.37	0.82	970	3.99	3.27	0.82	992	3.85	3.16	0.82	1036
30	22	4.46	3.12	0.70	948	4.31	3.01	0.70	1008	4.20	2.94	0.70	1036	4.03	2.82	0.70	1079
30	24	4.69	2.72	0.58	992	4.52	2.62	0.58	1046	4.41	2.56	0.58	1079	4.27	2.48	0.58	1134
30	26	4.83	2.22	0.46	1046	4.69	2.16	0.46	1101	4.62	2.13	0.46	1134	4.48	2.06	0.46	1166
31	18	4.11	4.03	0.98	872	3.94	3.86	0.98	916	3.78	3.70	0.98	959	3.64	3.57	0.98	1003
31	20	4.29	3.69	0.86	916	4.11	3.54	0.86	970	3.99	3.43	0.86	992	3.85	3.31	0.86	1036
31	22	4.46	3.30	0.74	948	4.31	3.19	0.74	1008	4.20	3.11	0.74	1036	4.03	2.98	0.74	1079
31	24	4.69	2.91	0.62	992	4.52	2.80	0.62	1046	4.41	2.73	0.62	1079	4.27	2.65	0.62	1134
31	26	4.83	2.42	0.50	1046	4.69	2.35	0.50	1101	4.62	2.31	0.50	1134	4.48	2.24	0.50	1166
32	18	4.11	4.19	1.02	872	3.94	4.02	1.02	916	3.78	3.86	1.02	959	3.64	3.71	1.02	1003
32	20	4.29	3.86	0.90	916	4.11	3.70	0.90	970	3.99	3.59	0.90	992	3.85	3.47	0.90	1036
32	22	4.46	3.48	0.78	948	4.31	3.36	0.78	1008	4.20	3.28	0.78	1036	4.03	3.14	0.78	1079
32	24	4.69	3.10	0.66	992	4.52	2.98	0.66	1046	4.41	2.91	0.66	1079	4.27	2.82	0.66	1134
32	26	4.83	2.61	0.54	1046	4.69	2.53	0.54	1101	4.62	2.49	0.54	1134	4.48	2.42	0.54	1166

NOTE Q : Total capacity (kW) SHF : Sensible heat factor DB : Dry-bulb temperature
SHC : Sensible heat capacity (kW) INPUT : Total power input (W) WB : Wet-bulb temperature

COOL operation **Rated frequency 69Hz**

MCFZ-A12WV : MUZ-A12YV MUZ-A12YVH

CAPACITY:3.5(kW) SHF:0.76 INPUT:1090(W)

		OUTDOOR DB(℃)											
INDOOR DB (℃)	INDOOR WB (℃)	35				40				46			
		Q	SHC	SHF	INPUT	Q	SHC	SHF	INPUT	Q	SHC	SHF	INPUT
21	18	3.43	1.99	0.58	1068	3.15	1.83	0.58	1134	2.91	1.68	0.58	1177
21	20	3.61	1.66	0.46	1112	3.36	1.55	0.46	1166	3.12	1.43	0.46	1232
22	18	3.43	2.13	0.62	1068	3.15	1.95	0.62	1134	2.91	1.80	0.62	1177
22	20	3.61	1.80	0.50	1112	3.36	1.68	0.50	1166	3.12	1.56	0.50	1232
22	22	3.82	1.45	0.38	1155	3.57	1.36	0.38	1221	3.33	1.26	0.38	1264
23	18	3.43	2.26	0.66	1068	3.15	2.08	0.66	1134	2.91	1.92	0.66	1177
23	20	3.61	1.95	0.54	1112	3.36	1.81	0.54	1166	3.12	1.68	0.54	1232
23	22	3.82	1.60	0.42	1155	3.57	1.50	0.42	1221	3.33	1.40	0.42	1264
24	18	3.43	2.40	0.70	1068	3.15	2.21	0.70	1134	2.91	2.03	0.70	1177
24	20	3.61	2.09	0.58	1112	3.36	1.95	0.58	1166	3.12	1.81	0.58	1232
24	22	3.82	1.75	0.46	1155	3.57	1.64	0.46	1221	3.33	1.53	0.46	1264
24	24	4.03	1.37	0.34	1199	3.78	1.29	0.34	1254	3.57	1.21	0.34	1308
25	18	3.43	2.54	0.74	1068	3.15	2.33	0.74	1134	2.91	2.15	0.74	1177
25	20	3.61	2.24	0.62	1112	3.36	2.08	0.62	1166	3.12	1.93	0.62	1232
25	22	3.82	1.91	0.50	1155	3.57	1.79	0.50	1221	3.33	1.66	0.50	1264
25	24	4.03	1.53	0.38	1199	3.78	1.44	0.38	1254	3.57	1.36	0.38	1308
26	18	3.43	2.68	0.78	1068	3.15	2.46	0.78	1134	2.91	2.27	0.78	1177
26	20	3.61	2.38	0.66	1112	3.36	2.22	0.66	1166	3.12	2.06	0.66	1232
26	22	3.82	2.06	0.54	1155	3.57	1.93	0.54	1221	3.33	1.80	0.54	1264
26	24	4.03	1.69	0.42	1199	3.78	1.59	0.42	1254	3.57	1.50	0.42	1308
26	26	4.24	1.27	0.30	1243	3.99	1.20	0.30	1297	3.75	1.12	0.30	1352
27	18	3.43	2.81	0.82	1068	3.15	2.58	0.82	1134	2.91	2.38	0.82	1177
27	20	3.61	2.52	0.70	1112	3.36	2.35	0.70	1166	3.12	2.18	0.70	1232
27	22	3.82	2.21	0.58	1155	3.57	2.07	0.58	1221	3.33	1.93	0.58	1264
27	24	4.03	1.85	0.46	1199	3.78	1.74	0.46	1254	3.57	1.64	0.46	1308
27	26	4.24	1.44	0.34	1243	3.99	1.36	0.34	1297	3.75	1.27	0.34	1352
28	18	3.43	2.95	0.86	1068	3.15	2.71	0.86	1134	2.91	2.50	0.86	1177
28	20	3.61	2.67	0.74	1112	3.36	2.49	0.74	1166	3.12	2.31	0.74	1232
28	22	3.82	2.37	0.62	1155	3.57	2.21	0.62	1221	3.33	2.06	0.62	1264
28	24	4.03	2.01	0.50	1199	3.78	1.89	0.50	1254	3.57	1.79	0.50	1308
28	26	4.24	1.61	0.38	1243	3.99	1.52	0.38	1297	3.75	1.42	0.38	1352
29	18	3.43	3.09	0.90	1068	3.15	2.84	0.90	1134	2.91	2.61	0.90	1177
29	20	3.61	2.81	0.78	1112	3.36	2.62	0.78	1166	3.12	2.43	0.78	1232
29	22	3.82	2.52	0.66	1155	3.57	2.36	0.66	1221	3.33	2.19	0.66	1264
29	24	4.03	2.17	0.54	1199	3.78	2.04	0.54	1254	3.57	1.93	0.54	1308
29	26	4.24	1.78	0.42	1243	3.99	1.68	0.42	1297	3.75	1.57	0.42	1352
30	18	3.43	3.22	0.94	1068	3.15	2.96	0.94	1134	2.91	2.73	0.94	1177
30	20	3.61	2.96	0.82	1112	3.36	2.76	0.82	1166	3.12	2.55	0.82	1232
30	22	3.82	2.67	0.70	1155	3.57	2.50	0.70	1221	3.33	2.33	0.70	1264
30	24	4.03	2.33	0.58	1199	3.78	2.19	0.58	1254	3.57	2.07	0.58	1308
30	26	4.24	1.95	0.46	1243	3.99	1.84	0.46	1297	3.75	1.72	0.46	1352
31	18	3.43	3.36	0.98	1068	3.15	3.09	0.98	1134	2.91	2.85	0.98	1177
31	20	3.61	3.10	0.86	1112	3.36	2.89	0.86	1166	3.12	2.68	0.86	1232
31	22	3.82	2.82	0.74	1155	3.57	2.64	0.74	1221	3.33	2.46	0.74	1264
31	24	4.03	2.50	0.62	1199	3.78	2.34	0.62	1254	3.57	2.21	0.62	1308
31	26	4.24	2.12	0.50	1243	3.99	2.00	0.50	1297	3.75	1.87	0.50	1352
32	18	3.43	3.50	1.02	1068	3.15	3.21	1.02	1134	2.91	2.96	1.02	1177
32	20	3.61	3.24	0.90	1112	3.36	3.02	0.90	1166	3.12	2.80	0.90	1232
32	22	3.82	2.98	0.78	1155	3.57	2.78	0.78	1221	3.33	2.59	0.78	1264
32	24	4.03	2.66	0.66	1199	3.78	2.49	0.66	1254	3.57	2.36	0.66	1308
32	26	4.24	2.29	0.54	1243	3.99	2.15	0.54	1297	3.75	2.02	0.54	1352

NOTE Q : Total capacity (kW) SHF : Sensible heat factor DB : Dry-bulb temperature
SHC : Sensible heat capacity (kW) INPUT : Total power input (W) WB : Wet-bulb temperature

COOL operation **Rated frequency 84Hz**

MCFZ-A18WV : MUZ-A18YV

CAPACITY:4.8(kW) SHF:0.65 INPUT:1830(W)

		OUTDOOR DB(℃)															
INDOOR DB(℃)	INDOOR WB(℃)	21				25				27				30			
		Q	SHC	SHF	INPUT	Q	SHC	SHF	INPUT	Q	SHC	SHF	INPUT	Q	SHC	SHF	INPUT
21	18	5.64	2.65	0.47	1464	5.40	2.54	0.47	1537	5.18	2.44	0.47	1610	4.99	2.35	0.47	1684
21	20	5.88	2.06	0.35	1537	5.64	1.97	0.35	1629	5.47	1.92	0.35	1665	5.28	1.85	0.35	1739
22	18	5.64	2.88	0.51	1464	5.40	2.75	0.51	1537	5.18	2.64	0.51	1610	4.99	2.55	0.51	1684
22	20	5.88	2.29	0.39	1537	5.64	2.20	0.39	1629	5.47	2.13	0.39	1665	5.28	2.06	0.39	1739
22	22	6.12	1.65	0.27	1592	5.90	1.59	0.27	1693	5.76	1.56	0.27	1739	5.52	1.49	0.27	1812
23	18	5.64	3.10	0.55	1464	5.40	2.97	0.55	1537	5.18	2.85	0.55	1610	4.99	2.75	0.55	1684
23	20	5.88	2.53	0.43	1537	5.64	2.43	0.43	1629	5.47	2.35	0.43	1665	5.28	2.27	0.43	1739
23	22	6.12	1.90	0.31	1592	5.90	1.83	0.31	1693	5.76	1.79	0.31	1739	5.52	1.71	0.31	1812
24	18	5.64	3.33	0.59	1464	5.40	3.19	0.59	1537	5.18	3.06	0.59	1610	4.99	2.95	0.59	1684
24	20	5.88	2.76	0.47	1537	5.64	2.65	0.47	1629	5.47	2.57	0.47	1665	5.28	2.48	0.47	1739
24	22	6.12	2.14	0.35	1592	5.90	2.07	0.35	1693	5.76	2.02	0.35	1739	5.52	1.93	0.35	1812
24	24	6.43	1.48	0.23	1665	6.19	1.42	0.23	1757	6.05	1.39	0.23	1812	5.86	1.35	0.23	1903
25	18	5.64	3.55	0.63	1464	5.40	3.40	0.63	1537	5.18	3.27	0.63	1610	4.99	3.14	0.63	1684
25	20	5.88	3.00	0.51	1537	5.64	2.88	0.51	1629	5.47	2.79	0.51	1665	5.28	2.69	0.51	1739
25	22	6.12	2.39	0.39	1592	5.90	2.30	0.39	1693	5.76	2.25	0.39	1739	5.52	2.15	0.39	1812
25	24	6.43	1.74	0.27	1665	6.19	1.67	0.27	1757	6.05	1.63	0.27	1812	5.86	1.58	0.27	1903
26	18	5.64	3.78	0.67	1464	5.40	3.62	0.67	1537	5.18	3.47	0.67	1610	4.99	3.34	0.67	1684
26	20	5.88	3.23	0.55	1537	5.64	3.10	0.55	1629	5.47	3.01	0.55	1665	5.28	2.90	0.55	1739
26	22	6.12	2.63	0.43	1592	5.90	2.54	0.43	1693	5.76	2.48	0.43	1739	5.52	2.37	0.43	1812
26	24	6.43	1.99	0.31	1665	6.19	1.92	0.31	1757	6.05	1.87	0.31	1812	5.86	1.82	0.31	1903
26	26	6.62	1.26	0.19	1757	6.43	1.22	0.19	1848	6.34	1.20	0.19	1903	6.14	1.17	0.19	1958
27	18	5.64	4.00	0.71	1464	5.40	3.83	0.71	1537	5.18	3.68	0.71	1610	4.99	3.54	0.71	1684
27	20	5.88	3.47	0.59	1537	5.64	3.33	0.59	1629	5.47	3.23	0.59	1665	5.28	3.12	0.59	1739
27	22	6.12	2.88	0.47	1592	5.90	2.77	0.47	1693	5.76	2.71	0.47	1739	5.52	2.59	0.47	1812
27	24	6.43	2.25	0.35	1665	6.19	2.17	0.35	1757	6.05	2.12	0.35	1812	5.86	2.05	0.35	1903
27	26	6.62	1.52	0.23	1757	6.43	1.48	0.23	1848	6.34	1.46	0.23	1903	6.14	1.41	0.23	1958
28	18	5.64	4.23	0.75	1464	5.40	4.05	0.75	1537	5.18	3.89	0.75	1610	4.99	3.74	0.75	1684
28	20	5.88	3.70	0.63	1537	5.64	3.55	0.63	1629	5.47	3.45	0.63	1665	5.28	3.33	0.63	1739
28	22	6.12	3.12	0.51	1592	5.90	3.01	0.51	1693	5.76	2.94	0.51	1739	5.52	2.82	0.51	1812
28	24	6.43	2.51	0.39	1665	6.19	2.41	0.39	1757	6.05	2.36	0.39	1812	5.86	2.28	0.39	1903
28	26	6.62	1.79	0.27	1757	6.43	1.74	0.27	1848	6.34	1.71	0.27	1903	6.14	1.66	0.27	1958
29	18	5.64	4.46	0.79	1464	5.40	4.27	0.79	1537	5.18	4.10	0.79	1610	4.99	3.94	0.79	1684
29	20	5.88	3.94	0.67	1537	5.64	3.78	0.67	1629	5.47	3.67	0.67	1665	5.28	3.54	0.67	1739
29	22	6.12	3.37	0.55	1592	5.90	3.25	0.55	1693	5.76	3.17	0.55	1739	5.52	3.04	0.55	1812
29	24	6.43	2.77	0.43	1665	6.19	2.66	0.43	1757	6.05	2.60	0.43	1812	5.86	2.52	0.43	1903
29	26	6.62	2.05	0.31	1757	6.43	1.99	0.31	1848	6.34	1.96	0.31	1903	6.14	1.90	0.31	1958
30	18	5.64	4.68	0.83	1464	5.40	4.48	0.83	1537	5.18	4.30	0.83	1610	4.99	4.14	0.83	1684
30	20	5.88	4.17	0.71	1537	5.64	4.00	0.71	1629	5.47	3.89	0.71	1665	5.28	3.75	0.71	1739
30	22	6.12	3.61	0.59	1592	5.90	3.48	0.59	1693	5.76	3.40	0.59	1739	5.52	3.26	0.59	1812
30	24	6.43	3.02	0.47	1665	6.19	2.91	0.47	1757	6.05	2.84	0.47	1812	5.86	2.75	0.47	1903
30	26	6.62	2.32	0.35	1757	6.43	2.25	0.35	1848	6.34	2.22	0.35	1903	6.14	2.15	0.35	1958
31	18	5.64	4.91	0.87	1464	5.40	4.70	0.87	1537	5.18	4.51	0.87	1610	4.99	4.34	0.87	1684
31	20	5.88	4.41	0.75	1537	5.64	4.23	0.75	1629	5.47	4.10	0.75	1665	5.28	3.96	0.75	1739
31	22	6.12	3.86	0.63	1592	5.90	3.72	0.63	1693	5.76	3.63	0.63	1739	5.52	3.48	0.63	1812
31	24	6.43	3.28	0.51	1665	6.19	3.16	0.51	1757	6.05	3.08	0.51	1812	5.86	2.99	0.51	1903
31	26	6.62	2.58	0.39	1757	6.43	2.51	0.39	1848	6.34	2.47	0.39	1903	6.14	2.40	0.39	1958
32	18	5.64	5.13	0.91	1464	5.40	4.91	0.91	1537	5.18	4.72	0.91	1610	4.99	4.54	0.91	1684
32	20	5.88	4.65	0.79	1537	5.64	4.46	0.79	1629	5.47	4.32	0.79	1665	5.28	4.17	0.79	1739
32	22	6.12	4.10	0.67	1592	5.90	3.96	0.67	1693	5.76	3.86	0.67	1739	5.52	3.70	0.67	1812
32	24	6.43	3.54	0.55	1665	6.19	3.41	0.55	1757	6.05	3.33	0.55	1812	5.86	3.22	0.55	1903
32	26	6.62	2.85	0.43	1757	6.43	2.77	0.43	1848	6.34	2.72	0.43	1903	6.14	2.64	0.43	1958

NOTE Q : Total capacity (kW) SHF : Sensible heat factor DB : Dry-bulb temperature
SHC : Sensible heat capacity (kW) INPUT : Total power input (W) WB : Wet-bulb temperature

COOL operation **Rated frequency 84Hz**

MCFZ-A18WV : MUZ-A18YV

CAPACITY : 4.8(kW) SHF : 0.65 INPUT : 1830(W)

		OUTDOOR DB(℃)											
INDOOR DB(℃)	INDOOR WB(℃)	35				40				43			
		Q	SHC	SHF	INPUT	Q	SHC	SHF	INPUT	Q	SHC	SHF	INPUT
21	18	4.70	2.21	0.47	1793	4.32	2.03	0.47	1903	4.15	1.95	0.47	1940
21	20	4.94	1.73	0.35	1867	4.61	1.61	0.35	1958	4.44	1.55	0.35	2013
22	18	4.70	2.40	0.51	1793	4.32	2.20	0.51	1903	4.15	2.12	0.51	1940
22	20	4.94	1.93	0.39	1867	4.61	1.80	0.39	1958	4.44	1.73	0.39	2013
22	22	5.23	1.41	0.27	1940	4.90	1.32	0.27	2050	4.73	1.28	0.27	2086
23	18	4.70	2.59	0.55	1793	4.32	2.38	0.55	1903	4.15	2.28	0.55	1940
23	20	4.94	2.13	0.43	1867	4.61	1.98	0.43	1958	4.44	1.91	0.43	2013
23	22	5.23	1.62	0.31	1940	4.90	1.52	0.31	2050	4.73	1.47	0.31	2086
24	18	4.70	2.78	0.59	1793	4.32	2.55	0.59	1903	4.15	2.45	0.59	1940
24	20	4.94	2.32	0.47	1867	4.61	2.17	0.47	1958	4.44	2.09	0.47	2013
24	22	5.23	1.83	0.35	1940	4.90	1.71	0.35	2050	4.73	1.65	0.35	2086
24	24	5.52	1.27	0.23	2013	5.18	1.19	0.23	2105	5.04	1.16	0.23	2150
25	18	4.70	2.96	0.63	1793	4.32	2.72	0.63	1903	4.15	2.62	0.63	1940
25	20	4.94	2.52	0.51	1867	4.61	2.35	0.51	1958	4.44	2.26	0.51	2013
25	22	5.23	2.04	0.39	1940	4.90	1.91	0.39	2050	4.73	1.84	0.39	2086
25	24	5.52	1.49	0.27	2013	5.18	1.40	0.27	2105	5.04	1.36	0.27	2150
26	18	4.70	3.15	0.67	1793	4.32	2.89	0.67	1903	4.15	2.78	0.67	1940
26	20	4.94	2.72	0.55	1867	4.61	2.53	0.55	1958	4.44	2.44	0.55	2013
26	22	5.23	2.25	0.43	1940	4.90	2.11	0.43	2050	4.73	2.03	0.43	2086
26	24	5.52	1.71	0.31	2013	5.18	1.61	0.31	2105	5.04	1.56	0.31	2150
26	26	5.81	1.10	0.19	2086	5.47	1.04	0.19	2178	5.30	1.01	0.19	2223
27	18	4.70	3.34	0.71	1793	4.32	3.07	0.71	1903	4.15	2.95	0.71	1940
27	20	4.94	2.92	0.59	1867	4.61	2.72	0.59	1958	4.44	2.62	0.59	2013
27	22	5.23	2.46	0.47	1940	4.90	2.30	0.47	2050	4.73	2.22	0.47	2086
27	24	5.52	1.93	0.35	2013	5.18	1.81	0.35	2105	5.04	1.76	0.35	2150
27	26	5.81	1.34	0.23	2086	5.47	1.26	0.23	2178	5.30	1.22	0.23	2223
28	18	4.70	3.53	0.75	1793	4.32	3.24	0.75	1903	4.15	3.11	0.75	1940
28	20	4.94	3.11	0.63	1867	4.61	2.90	0.63	1958	4.44	2.80	0.63	2013
28	22	5.23	2.67	0.51	1940	4.90	2.50	0.51	2050	4.73	2.41	0.51	2086
28	24	5.52	2.15	0.39	2013	5.18	2.02	0.39	2105	5.04	1.97	0.39	2150
28	26	5.81	1.57	0.27	2086	5.47	1.48	0.27	2178	5.30	1.43	0.27	2223
29	18	4.70	3.72	0.79	1793	4.32	3.41	0.79	1903	4.15	3.28	0.79	1940
29	20	4.94	3.31	0.67	1867	4.61	3.09	0.67	1958	4.44	2.97	0.67	2013
29	22	5.23	2.88	0.55	1940	4.90	2.69	0.55	2050	4.73	2.60	0.55	2086
29	24	5.52	2.37	0.43	2013	5.18	2.23	0.43	2105	5.04	2.17	0.43	2150
29	26	5.81	1.80	0.31	2086	5.47	1.70	0.31	2178	5.30	1.64	0.31	2223
30	18	4.70	3.90	0.83	1793	4.32	3.59	0.83	1903	4.15	3.45	0.83	1940
30	20	4.94	3.51	0.71	1867	4.61	3.27	0.71	1958	4.44	3.15	0.71	2013
30	22	5.23	3.09	0.59	1940	4.90	2.89	0.59	2050	4.73	2.79	0.59	2086
30	24	5.52	2.59	0.47	2013	5.18	2.44	0.47	2105	5.04	2.37	0.47	2150
30	26	5.81	2.03	0.35	2086	5.47	1.92	0.35	2178	5.30	1.86	0.35	2223
31	18	4.70	4.09	0.87	1793	4.32	3.76	0.87	1903	4.15	3.61	0.87	1940
31	20	4.94	3.71	0.75	1867	4.61	3.46	0.75	1958	4.44	3.33	0.75	2013
31	22	5.23	3.30	0.63	1940	4.90	3.08	0.63	2050	4.73	2.98	0.63	2086
31	24	5.52	2.82	0.51	2013	5.18	2.64	0.51	2105	5.04	2.57	0.51	2150
31	26	5.81	2.27	0.39	2086	5.47	2.13	0.39	2178	5.30	2.07	0.39	2223
32	18	4.70	4.28	0.91	1793	4.32	3.93	0.91	1903	4.15	3.78	0.91	1940
32	20	4.94	3.91	0.79	1867	4.61	3.64	0.79	1958	4.44	3.51	0.79	2013
32	22	5.23	3.51	0.67	1940	4.90	3.28	0.67	2050	4.73	3.17	0.67	2086
32	24	5.52	3.04	0.55	2013	5.18	2.85	0.55	2105	5.04	2.77	0.55	2150
32	26	5.81	2.50	0.43	2086	5.47	2.35	0.43	2178	5.30	2.28	0.43	2223

NOTE Q : Total capacity (kW) SHF : Sensible heat factor DB : Dry-bulb temperature
SHC : Sensible heat capacity (kW) INPUT : Total power input (W) WB : Wet-bulb temperature

COOL operation **Rated frequency 102Hz**

MCFZ-A24WV : MUZ-A24YV

CAPACITY:5.5(kW) SHF:0.65 INPUT:2420(W)

		OUTDOOR DB(℃)															
INDOOR DB(℃)	INDOOR WB(℃)	21				25				27				30			
		Q	SHC	SHF	INPUT	Q	SHC	SHF	INPUT	Q	SHC	SHF	INPUT	Q	SHC	SHF	INPUT
21	18	6.46	3.04	0.47	1936	6.19	2.91	0.47	2033	5.94	2.79	0.47	2130	5.72	2.69	0.47	2226
21	20	6.74	2.36	0.35	2033	6.46	2.26	0.35	2154	6.27	2.19	0.35	2202	6.05	2.12	0.35	2299
22	18	6.46	3.30	0.51	1936	6.19	3.16	0.51	2033	5.94	3.03	0.51	2130	5.72	2.92	0.51	2226
22	20	6.74	2.63	0.39	2033	6.46	2.52	0.39	2154	6.27	2.45	0.39	2202	6.05	2.36	0.39	2299
22	22	7.01	1.89	0.27	2105	6.77	1.83	0.27	2239	6.60	1.78	0.27	2299	6.33	1.71	0.27	2396
23	18	6.46	3.55	0.55	1936	6.19	3.40	0.55	2033	5.94	3.27	0.55	2130	5.72	3.15	0.55	2226
23	20	6.74	2.90	0.43	2033	6.46	2.78	0.43	2154	6.27	2.70	0.43	2202	6.05	2.60	0.43	2299
23	22	7.01	2.17	0.31	2105	6.77	2.10	0.31	2239	6.60	2.05	0.31	2299	6.33	1.96	0.31	2396
24	18	6.46	3.81	0.59	1936	6.19	3.65	0.59	2033	5.94	3.50	0.59	2130	5.72	3.37	0.59	2226
24	20	6.74	3.17	0.47	2033	6.46	3.04	0.47	2154	6.27	2.95	0.47	2202	6.05	2.84	0.47	2299
24	22	7.01	2.45	0.35	2105	6.77	2.37	0.35	2239	6.60	2.31	0.35	2299	6.33	2.21	0.35	2396
24	24	7.37	1.70	0.23	2202	7.10	1.63	0.23	2323	6.93	1.59	0.23	2396	6.71	1.54	0.23	2517
25	18	6.46	4.07	0.63	1936	6.19	3.90	0.63	2033	5.94	3.74	0.63	2130	5.72	3.60	0.63	2226
25	20	6.74	3.44	0.51	2033	6.46	3.30	0.51	2154	6.27	3.20	0.51	2202	6.05	3.09	0.51	2299
25	22	7.01	2.73	0.39	2105	6.77	2.64	0.39	2239	6.60	2.57	0.39	2299	6.33	2.47	0.39	2396
25	24	7.37	1.99	0.27	2202	7.10	1.92	0.27	2323	6.93	1.87	0.27	2396	6.71	1.81	0.27	2517
26	18	6.46	4.33	0.67	1936	6.19	4.15	0.67	2033	5.94	3.98	0.67	2130	5.72	3.83	0.67	2226
26	20	6.74	3.71	0.55	2033	6.46	3.55	0.55	2154	6.27	3.45	0.55	2202	6.05	3.33	0.55	2299
26	22	7.01	3.02	0.43	2105	6.77	2.91	0.43	2239	6.60	2.84	0.43	2299	6.33	2.72	0.43	2396
26	24	7.37	2.28	0.31	2202	7.10	2.20	0.31	2323	6.93	2.15	0.31	2396	6.71	2.08	0.31	2517
26	26	7.59	1.44	0.19	2323	7.37	1.40	0.19	2444	7.26	1.38	0.19	2517	7.04	1.34	0.19	2589
27	18	6.46	4.59	0.71	1936	6.19	4.39	0.71	2033	5.94	4.22	0.71	2130	5.72	4.06	0.71	2226
27	20	6.74	3.98	0.59	2033	6.46	3.81	0.59	2154	6.27	3.70	0.59	2202	6.05	3.57	0.59	2299
27	22	7.01	3.30	0.47	2105	6.77	3.18	0.47	2239	6.60	3.10	0.47	2299	6.33	2.97	0.47	2396
27	24	7.37	2.58	0.35	2202	7.10	2.48	0.35	2323	6.93	2.43	0.35	2396	6.71	2.35	0.35	2517
27	26	7.59	1.75	0.23	2323	7.37	1.70	0.23	2444	7.26	1.67	0.23	2517	7.04	1.62	0.23	2589
28	18	6.46	4.85	0.75	1936	6.19	4.64	0.75	2033	5.94	4.46	0.75	2130	5.72	4.29	0.75	2226
28	20	6.74	4.24	0.63	2033	6.46	4.07	0.63	2154	6.27	3.95	0.63	2202	6.05	3.81	0.63	2299
28	22	7.01	3.58	0.51	2105	6.77	3.45	0.51	2239	6.60	3.37	0.51	2299	6.33	3.23	0.51	2396
28	24	7.37	2.87	0.39	2202	7.10	2.77	0.39	2323	6.93	2.70	0.39	2396	6.71	2.62	0.39	2517
28	26	7.59	2.05	0.27	2323	7.37	1.99	0.27	2444	7.26	1.96	0.27	2517	7.04	1.90	0.27	2589
29	18	6.46	5.11	0.79	1936	6.19	4.89	0.79	2033	5.94	4.69	0.79	2130	5.72	4.52	0.79	2226
29	20	6.74	4.51	0.67	2033	6.46	4.33	0.67	2154	6.27	4.20	0.67	2202	6.05	4.05	0.67	2299
29	22	7.01	3.86	0.55	2105	6.77	3.72	0.55	2239	6.60	3.63	0.55	2299	6.33	3.48	0.55	2396
29	24	7.37	3.17	0.43	2202	7.10	3.05	0.43	2323	6.93	2.98	0.43	2396	6.71	2.89	0.43	2517
29	26	7.59	2.35	0.31	2323	7.37	2.28	0.31	2444	7.26	2.25	0.31	2517	7.04	2.18	0.31	2589
30	18	6.46	5.36	0.83	1936	6.19	5.14	0.83	2033	5.94	4.93	0.83	2130	5.72	4.75	0.83	2226
30	20	6.74	4.78	0.71	2033	6.46	4.59	0.71	2154	6.27	4.45	0.71	2202	6.05	4.30	0.71	2299
30	22	7.01	4.14	0.59	2105	6.77	3.99	0.59	2239	6.60	3.89	0.59	2299	6.33	3.73	0.59	2396
30	24	7.37	3.46	0.47	2202	7.10	3.33	0.47	2323	6.93	3.26	0.47	2396	6.71	3.15	0.47	2517
30	26	7.59	2.66	0.35	2323	7.37	2.58	0.35	2444	7.26	2.54	0.35	2517	7.04	2.46	0.35	2589
31	18	6.46	5.62	0.87	1936	6.19	5.38	0.87	2033	5.94	5.17	0.87	2130	5.72	4.98	0.87	2226
31	20	6.74	5.05	0.75	2033	6.46	4.85	0.75	2154	6.27	4.70	0.75	2202	6.05	4.54	0.75	2299
31	22	7.01	4.42	0.63	2105	6.77	4.26	0.63	2239	6.60	4.16	0.63	2299	6.33	3.98	0.63	2396
31	24	7.37	3.76	0.51	2202	7.10	3.62	0.51	2323	6.93	3.53	0.51	2396	6.71	3.42	0.51	2517
31	26	7.59	2.96	0.39	2323	7.37	2.87	0.39	2444	7.26	2.83	0.39	2517	7.04	2.75	0.39	2589
32	18	6.46	5.88	0.91	1936	6.19	5.63	0.91	2033	5.94	5.41	0.91	2130	5.72	5.21	0.91	2226
32	20	6.74	5.32	0.79	2033	6.46	5.11	0.79	2154	6.27	4.95	0.79	2202	6.05	4.78	0.79	2299
32	22	7.01	4.70	0.67	2105	6.77	4.53	0.67	2239	6.60	4.42	0.67	2299	6.33	4.24	0.67	2396
32	24	7.37	4.05	0.55	2202	7.10	3.90	0.55	2323	6.93	3.81	0.55	2396	6.71	3.69	0.55	2517
32	26	7.59	3.26	0.43	2323	7.37	3.17	0.43	2444	7.26	3.12	0.43	2517	7.04	3.03	0.43	2589

NOTE Q : Total capacity (kW) SHF : Sensible heat factor DB : Dry-bulb temperature
SHC : Sensible heat capacity (kW) INPUT : Total power input (W) WB : Wet-bulb temperature

COOL operation **Rated frequency 102Hz**

MCFZ-A24WV : MUZ-A24YV

CAPACITY : 5.5(kW) SHF : 0.65 INPUT : 2420(W)

		OUTDOOR DB(℃)											
INDOOR	INDOOR	35				40				43			
DB(℃)	WB(℃)	Q	SHC	SHF	INPUT	Q	SHC	SHF	INPUT	Q	SHC	SHF	INPUT
21	18	5.39	2.53	0.47	2372	4.95	2.33	0.47	2517	4.76	2.24	0.47	2565
21	20	5.67	1.98	0.35	2468	5.28	1.85	0.35	2589	5.09	1.78	0.35	2662
22	18	5.39	2.75	0.51	2372	4.95	2.52	0.51	2517	4.76	2.43	0.51	2565
22	20	5.67	2.21	0.39	2468	5.28	2.06	0.39	2589	5.09	1.98	0.39	2662
22	22	6.00	1.62	0.27	2565	5.61	1.51	0.27	2710	5.42	1.46	0.27	2759
23	18	5.39	2.96	0.55	2372	4.95	2.72	0.55	2517	4.76	2.62	0.55	2565
23	20	5.67	2.44	0.43	2468	5.28	2.27	0.43	2589	5.09	2.19	0.43	2662
23	22	6.00	1.86	0.31	2565	5.61	1.74	0.31	2710	5.42	1.68	0.31	2759
24	18	5.39	3.18	0.59	2372	4.95	2.92	0.59	2517	4.76	2.81	0.59	2565
24	20	5.67	2.66	0.47	2468	5.28	2.48	0.47	2589	5.09	2.39	0.47	2662
24	22	6.00	2.10	0.35	2565	5.61	1.96	0.35	2710	5.42	1.90	0.35	2759
24	24	6.33	1.45	0.23	2662	5.94	1.37	0.23	2783	5.78	1.33	0.23	2844
25	18	5.39	3.40	0.63	2372	4.95	3.12	0.63	2517	4.76	3.00	0.63	2565
25	20	5.67	2.89	0.51	2468	5.28	2.69	0.51	2589	5.09	2.59	0.51	2662
25	22	6.00	2.34	0.39	2565	5.61	2.19	0.39	2710	5.42	2.11	0.39	2759
25	24	6.33	1.71	0.27	2662	5.94	1.60	0.27	2783	5.78	1.56	0.27	2844
26	18	5.39	3.61	0.67	2372	4.95	3.32	0.67	2517	4.76	3.19	0.67	2565
26	20	5.67	3.12	0.55	2468	5.28	2.90	0.55	2589	5.09	2.80	0.55	2662
26	22	6.00	2.58	0.43	2565	5.61	2.41	0.43	2710	5.42	2.33	0.43	2759
26	24	6.33	1.96	0.31	2662	5.94	1.84	0.31	2783	5.78	1.79	0.31	2844
26	26	6.66	1.26	0.19	2759	6.27	1.19	0.19	2880	6.08	1.15	0.19	2940
27	18	5.39	3.83	0.71	2372	4.95	3.51	0.71	2517	4.76	3.38	0.71	2565
27	20	5.67	3.34	0.59	2468	5.28	3.12	0.59	2589	5.09	3.00	0.59	2662
27	22	6.00	2.82	0.47	2565	5.61	2.64	0.47	2710	5.42	2.55	0.47	2759
27	24	6.33	2.21	0.35	2662	5.94	2.08	0.35	2783	5.78	2.02	0.35	2844
27	26	6.66	1.53	0.23	2759	6.27	1.44	0.23	2880	6.08	1.40	0.23	2940
28	18	5.39	4.04	0.75	2372	4.95	3.71	0.75	2517	4.76	3.57	0.75	2565
28	20	5.67	3.57	0.63	2468	5.28	3.33	0.63	2589	5.09	3.21	0.63	2662
28	22	6.00	3.06	0.51	2565	5.61	2.86	0.51	2710	5.42	2.76	0.51	2759
28	24	6.33	2.47	0.39	2662	5.94	2.32	0.39	2783	5.78	2.25	0.39	2844
28	26	6.66	1.80	0.27	2759	6.27	1.69	0.27	2880	6.08	1.64	0.27	2940
29	18	5.39	4.26	0.79	2372	4.95	3.91	0.79	2517	4.76	3.76	0.79	2565
29	20	5.67	3.80	0.67	2468	5.28	3.54	0.67	2589	5.09	3.41	0.67	2662
29	22	6.00	3.30	0.55	2565	5.61	3.09	0.55	2710	5.42	2.98	0.55	2759
29	24	6.33	2.72	0.43	2662	5.94	2.55	0.43	2783	5.78	2.48	0.43	2844
29	26	6.66	2.06	0.31	2759	6.27	1.94	0.31	2880	6.08	1.88	0.31	2940
30	18	5.39	4.47	0.83	2372	4.95	4.11	0.83	2517	4.76	3.95	0.83	2565
30	20	5.67	4.02	0.71	2468	5.28	3.75	0.71	2589	5.09	3.61	0.71	2662
30	22	6.00	3.54	0.59	2565	5.61	3.31	0.59	2710	5.42	3.20	0.59	2759
30	24	6.33	2.97	0.47	2662	5.94	2.79	0.47	2783	5.78	2.71	0.47	2844
30	26	6.66	2.33	0.35	2759	6.27	2.19	0.35	2880	6.08	2.13	0.35	2940
31	18	5.39	4.69	0.87	2372	4.95	4.31	0.87	2517	4.76	4.14	0.87	2565
31	20	5.67	4.25	0.75	2468	5.28	3.96	0.75	2589	5.09	3.82	0.75	2662
31	22	6.00	3.78	0.63	2565	5.61	3.53	0.63	2710	5.42	3.41	0.63	2759
31	24	6.33	3.23	0.51	2662	5.94	3.03	0.51	2783	5.78	2.95	0.51	2844
31	26	6.66	2.60	0.39	2759	6.27	2.45	0.39	2880	6.08	2.37	0.39	2940
32	18	5.39	4.90	0.91	2372	4.95	4.50	0.91	2517	4.76	4.33	0.91	2565
32	20	5.67	4.48	0.79	2468	5.28	4.17	0.79	2589	5.09	4.02	0.79	2662
32	22	6.00	4.02	0.67	2565	5.61	3.76	0.67	2710	5.42	3.63	0.67	2759
32	24	6.33	3.48	0.55	2662	5.94	3.27	0.55	2783	5.78	3.18	0.55	2844
32	26	6.66	2.86	0.43	2759	6.27	2.70	0.43	2880	6.08	2.61	0.43	2940

NOTE Q : Total capacity (kW) SHF : Sensible heat factor DB : Dry-bulb temperature
SHC : Sensible heat capacity (kW) INPUT : Total power input (W) WB : Wet-bulb temperature

HEAT operation

MCFZ-A12WV : MUZ-A12YV MUZ-A12YVH **Rated frequency 76Hz**

CAPACITY:3.9(kW) INPUT:1080(W)

	OUTDOOR WB(℃)													
INDOOR DB(℃)	-10		-5		0		5		10		15		20	
	Q	INPUT	Q	INPUT	Q	INPUT	Q	INPUT	Q	INPUT	Q	INPUT	Q	INPUT
15	2.46	702	2.96	842	3.47	950	3.98	1026	4.49	1091	4.95	1123	5.46	1145
21	2.34	756	2.81	896	3.32	994	3.78	1069	4.29	1123	4.76	1156	5.25	1199
26	2.11	810	2.61	950	3.08	1048	3.59	1123	4.10	1177	4.56	1210	5.07	1242

MCFZ-A18WV : MUZ-A18YV **Rated frequency 86Hz**

CAPACITY:6.0(kW) INPUT:2080(W)

	OUTDOOR WB(℃)													
INDOOR DB(℃)	-10		-5		0		5		10		15		20	
	Q	INPUT	Q	INPUT	Q	INPUT	Q	INPUT	Q	INPUT	Q	INPUT	Q	INPUT
15	3.78	1352	4.56	1622	5.34	1830	6.12	1976	6.90	2101	7.62	2163	8.40	2205
21	3.60	1456	4.32	1726	5.10	1914	5.82	2059	6.60	2163	7.32	2226	8.07	2309
26	3.24	1560	4.02	1830	4.74	2018	5.52	2163	6.30	2267	7.02	2330	7.80	2392

MCFZ-A24WV : MUZ-A24YV **Rated frequency 95Hz**

CAPACITY:6.4(kW) INPUT:2440(W)

	OUTDOOR WB(℃)													
INDOOR DB(℃)	-10		-5		0		5		10		15		20	
	Q	INPUT	Q	INPUT	Q	INPUT	Q	INPUT	Q	INPUT	Q	INPUT	Q	INPUT
15	4.03	1586	4.86	1903	5.70	2147	6.53	2318	7.36	2464	8.13	2538	8.96	2586
21	3.84	1708	4.61	2025	5.44	2245	6.21	2416	7.04	2538	7.81	2611	8.61	2708
26	3.46	1830	4.29	2147	5.06	2367	5.89	2538	6.72	2660	7.49	2733	8.32	2806

NOTE Q:Total capacity (kW) INPUT:Total power input (W) DB : Dry-bulb temperature WB : Wet-bulb temperature

C.2.7 NOISE CRITERIA CURVES

C.2.7.1 Cool Only

MCF-A12WV

FAN SPEED	SPL(dB(A))	LINE
High	44	●——●

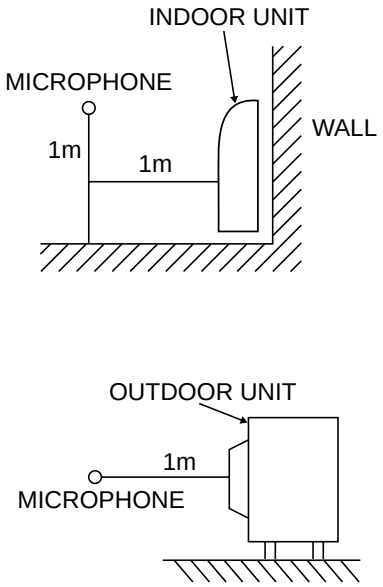

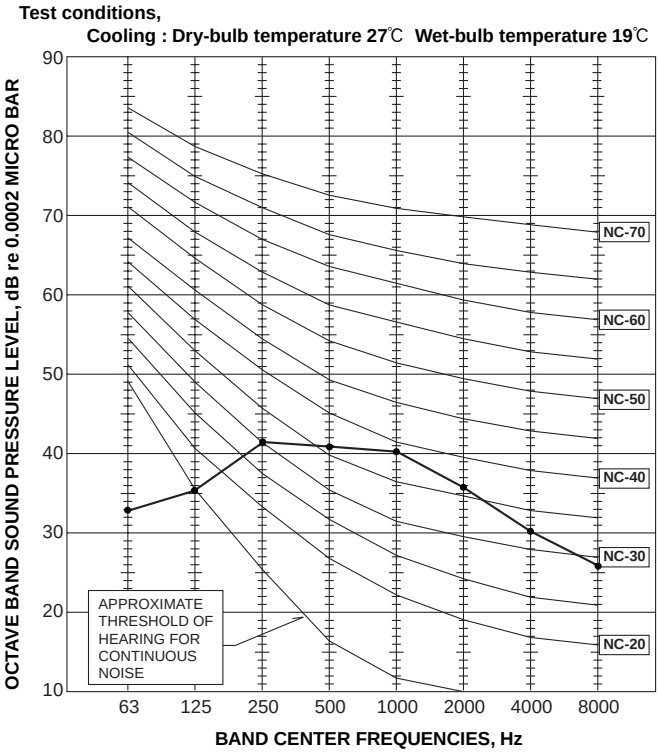

MU-A12YV

Refer to C-125 for MU-A12YV.

MCF-A18WV

FAN SPEED	SPL(dB(A))	LINE
High	46	●——●

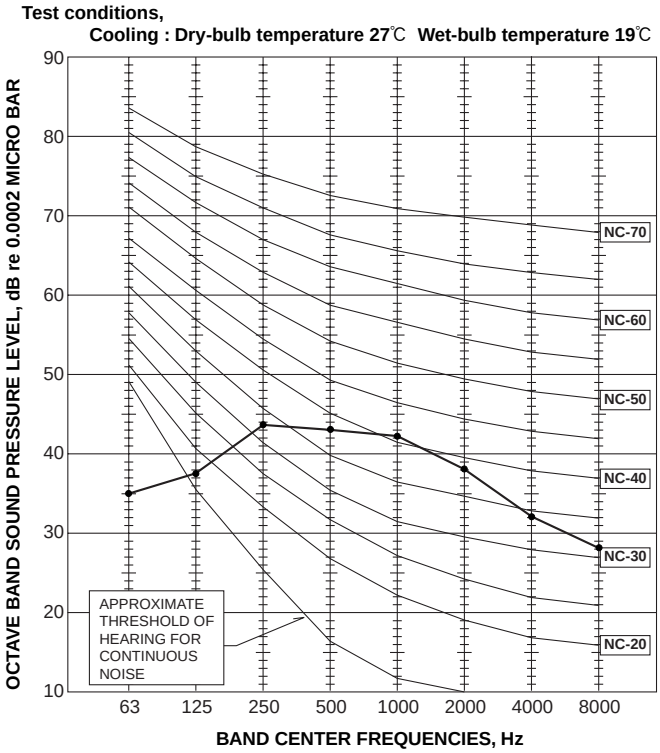

MUCF-A18WV

FAN SPEED	SPL(dB(A))	LINE
High	52	●——●

Test conditions,
Cooling : Dry-bulb temperature 35℃ Wet-bulb temperature 24℃

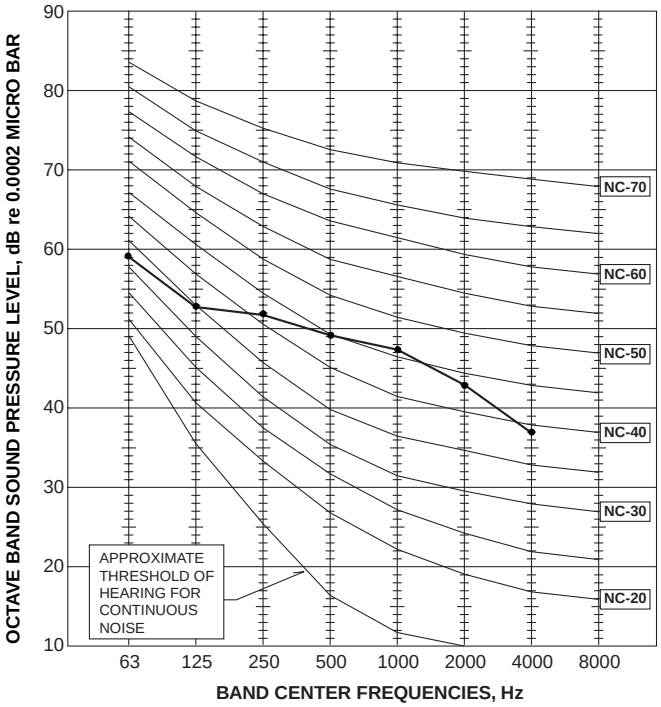

MCF-A24WV

FAN SPEED	SPL(dB(A))	LINE
High	48	●——●

Test conditions,
Cooling : Dry-bulb temperature 27℃ Wet-bulb temperature 19℃

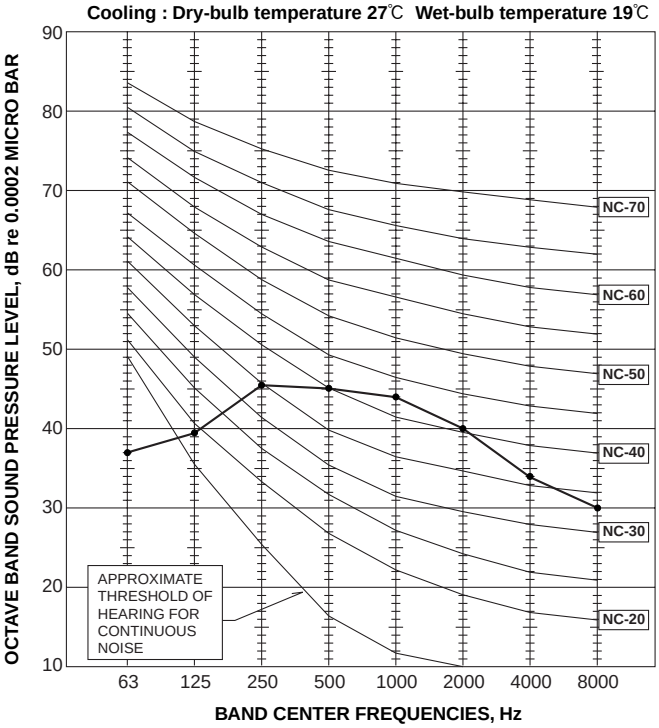

MUCF-A24WV

FAN SPEED	SPL(dB(A))	LINE
High	53	●——●

Test conditions,
Cooling : Dry-bulb temperature 35℃ Wet-bulb temperature 24℃

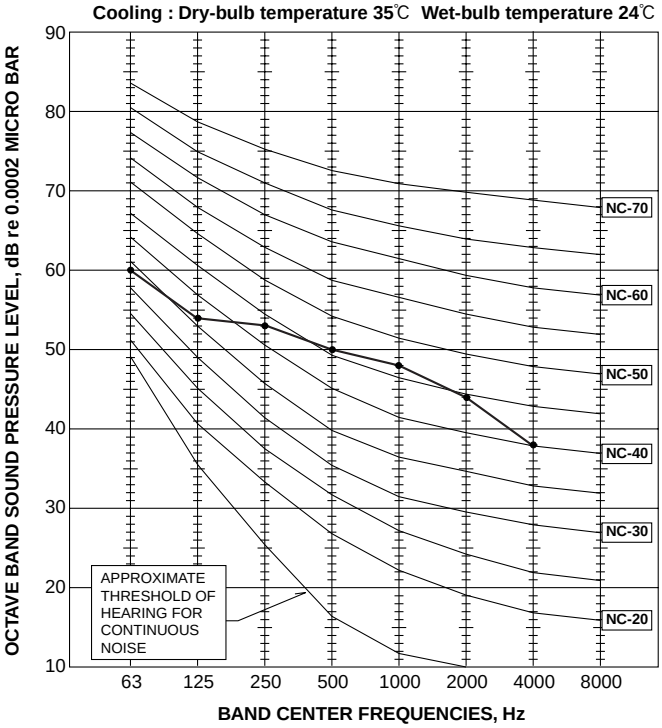

C.2.7.2 Heat Pump

MCFH-A12WV

SPEED	SPL(dB(A))	LINE
High	46	●——●

Test conditions,
Cooling : DB 27℃ WB 19℃
Heating : DB 20℃ WB 15℃

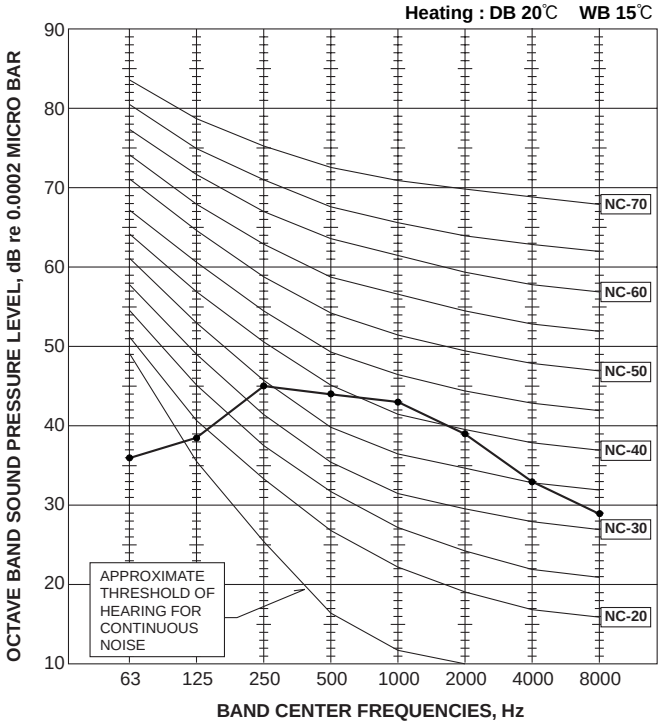

MUH-A12YV

Refer to C-127 for MUH-A12YV.

MCFH-A18WV

SPEED	SPL(dB(A))	LINE
High	48	●——●

Test conditions,
Cooling : DB 27℃ WB 19℃
Heating : DB 20℃ WB 15℃

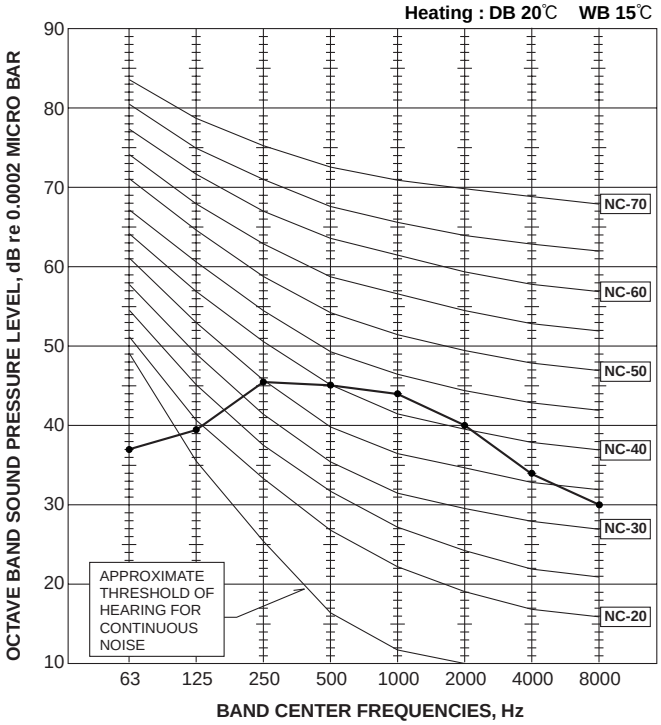

MUCFH-A18WV

FAN SPEED	SPL(dB(A))	LINE
High	52	●——●

Test conditions,
Cooling : Dry-bulb temperature 35℃ Wet-bulb temperature (24℃)
Heating : Dry-bulb temperature 7℃ Wet-bulb temperature 6℃

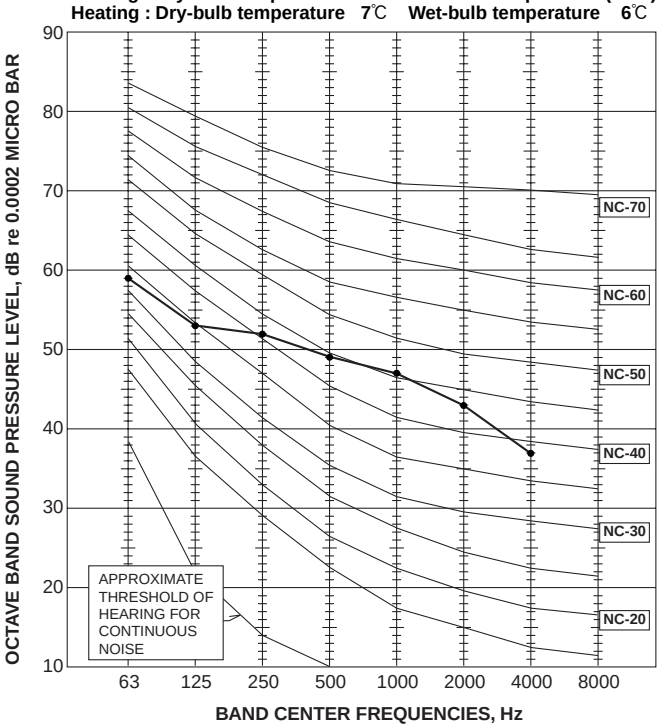

MCFH-A24WV

SPEED	SPL(dB(A))	LINE
High	48	●——●

Test conditions,
Cooling : DB 27℃ WB 19℃
Heating : DB 20℃ WB 15℃

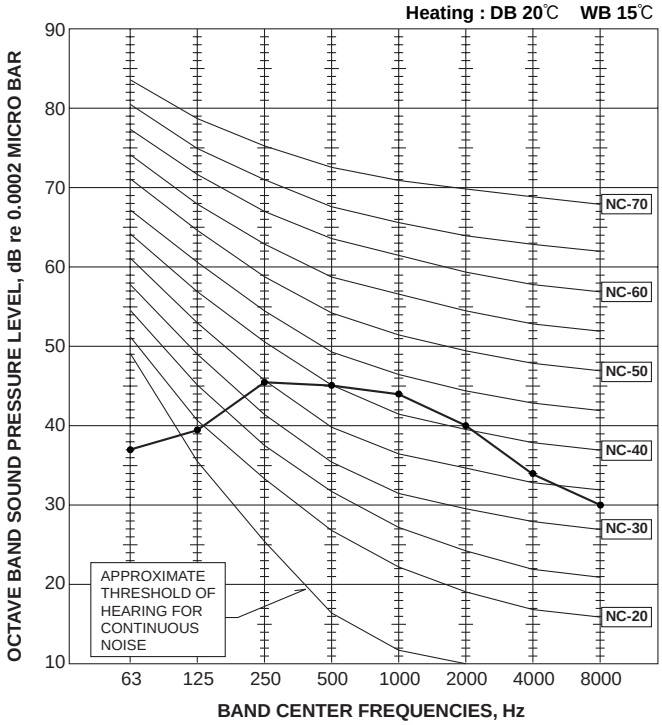

MUCFH-A24WV

FAN SPEED	SPL(dB(A))	LINE
High	53	●——●

Test conditions,
Cooling : Dry-bulb temperature 35℃ Wet-bulb temperature (24℃)
Heating : Dry-bulb temperature 7℃ Wet-bulb temperature 6℃

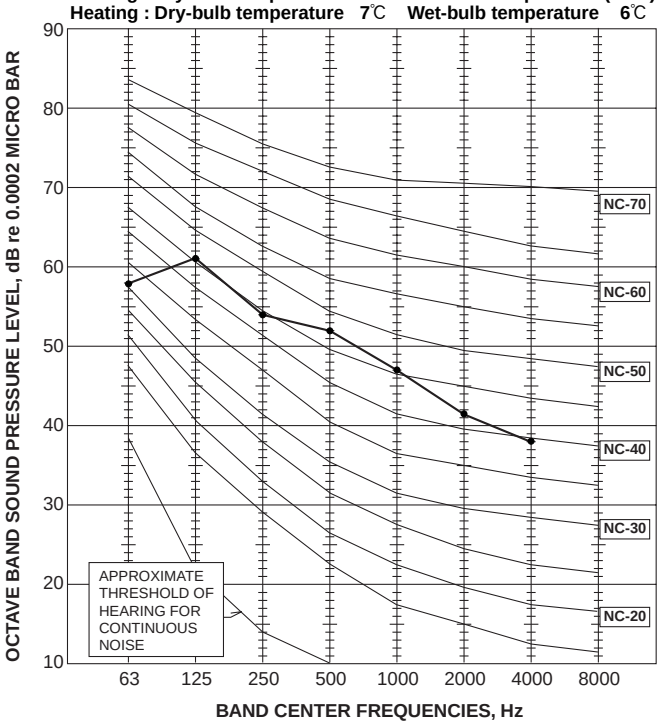

C.2.7.3 Inverter Heat Pump

MCFZ-A12WV

SPEED	SPL(dB(A))	LINE
High	46	●——●

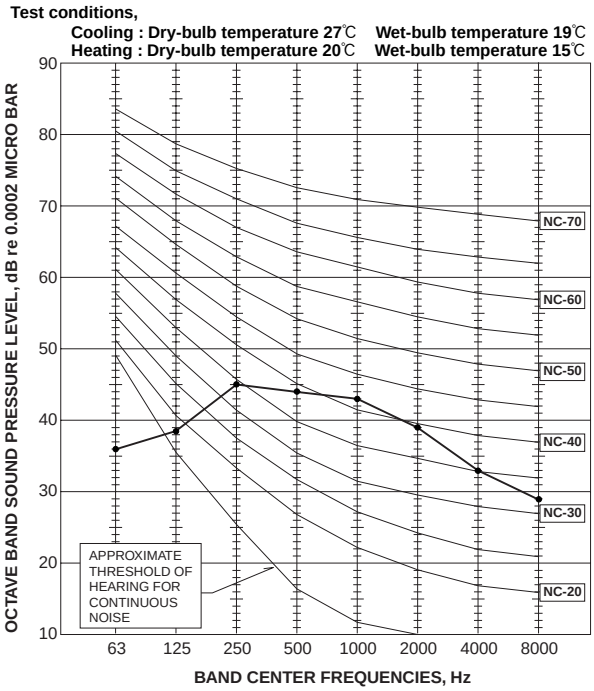

MCFZ-A18WV

SPEED	SPL(dB(A))	LINE
High	48	●——●

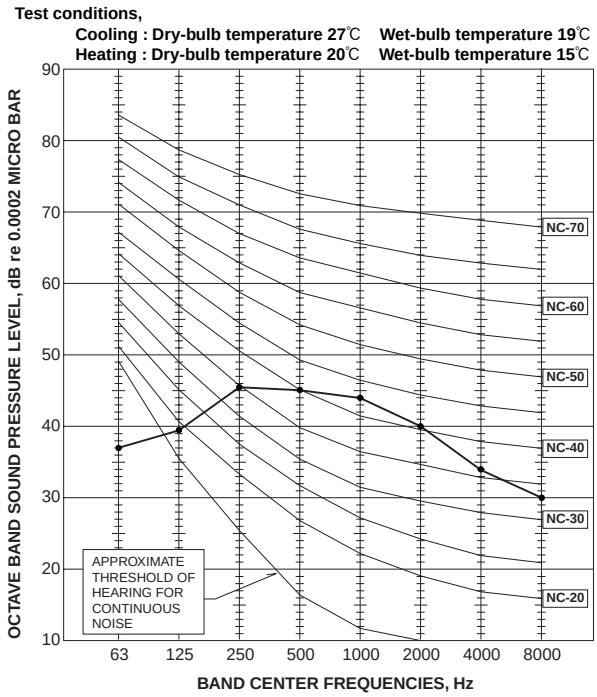

MCFZ-A24WV

SPEED	SPL(dB(A))	LINE
High	48	●——●

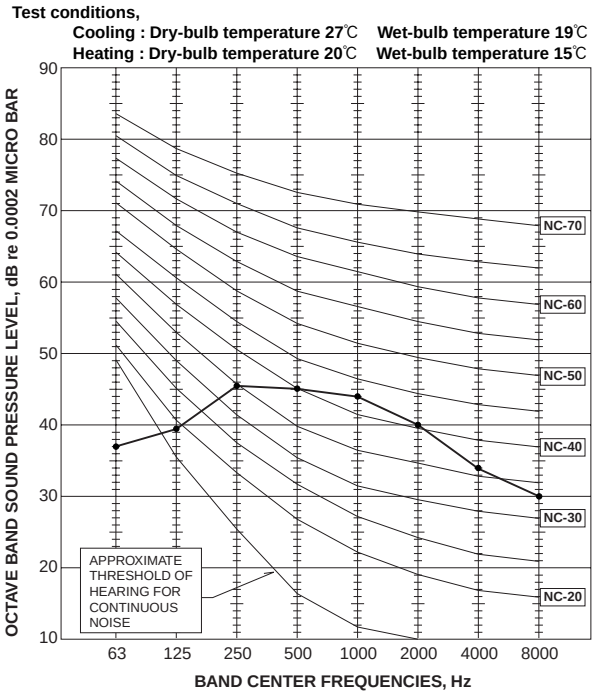

MUZ-A12YV(H)
MUZ-A18YV
MUZ-A24YV

Refer to C-129 for MUZ-A12YV(H).
Refer to C-130 for MUZ-A18YV.
Refer to C-130 for MUZ-A24YV.

C.2.8 REMOTE CONTROLLER OPERATION

C.2.8.1 Cool Only

MCF-A12WV MCF-A18WV MCF-A24WV

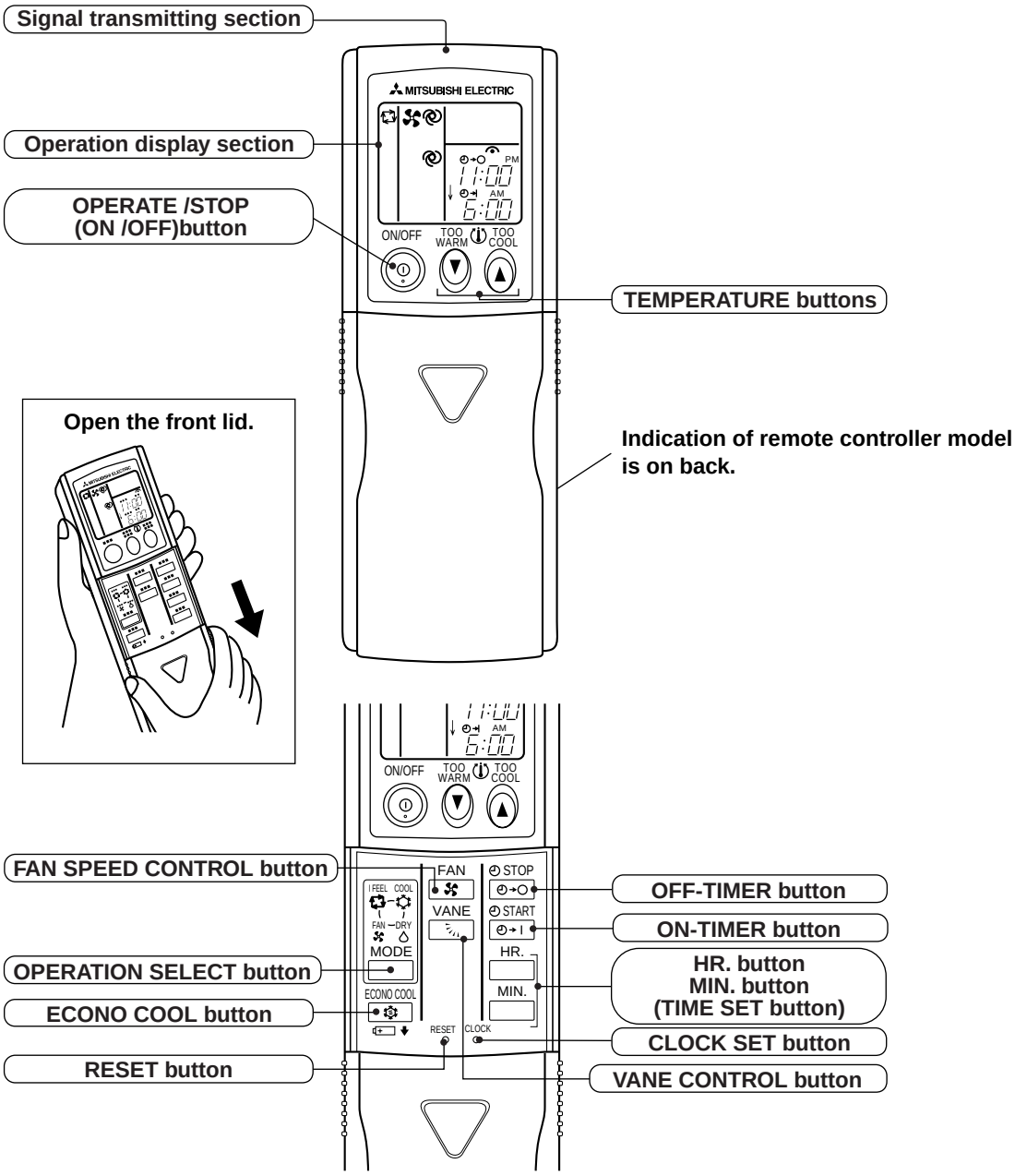

C.2.8.2 Heat Pump

MCFH-A12WV
MCFH-A18WV
MCFH-A24WV

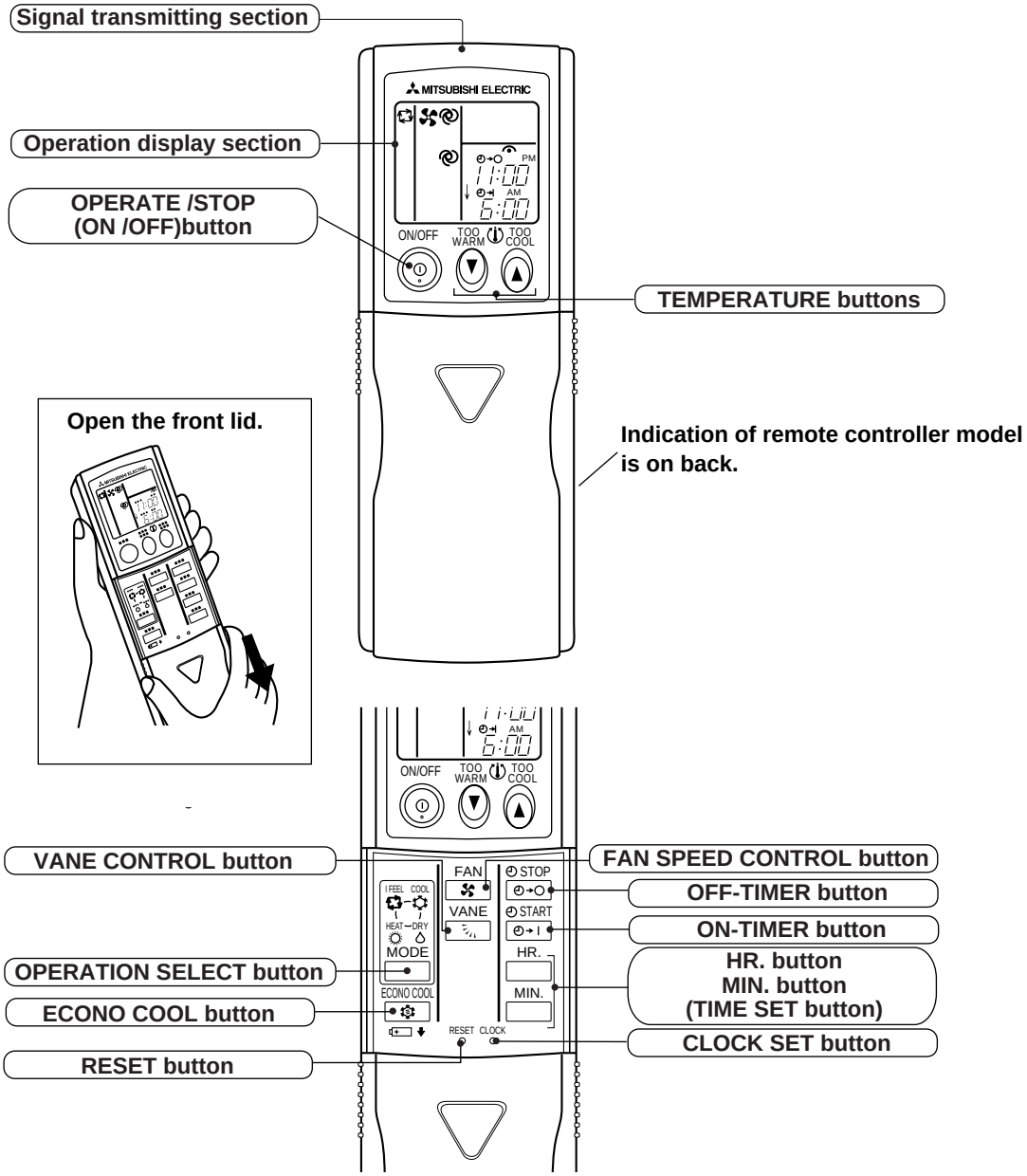

C.2.8.3 Inverter Heat Pump

MCFZ-A12WV

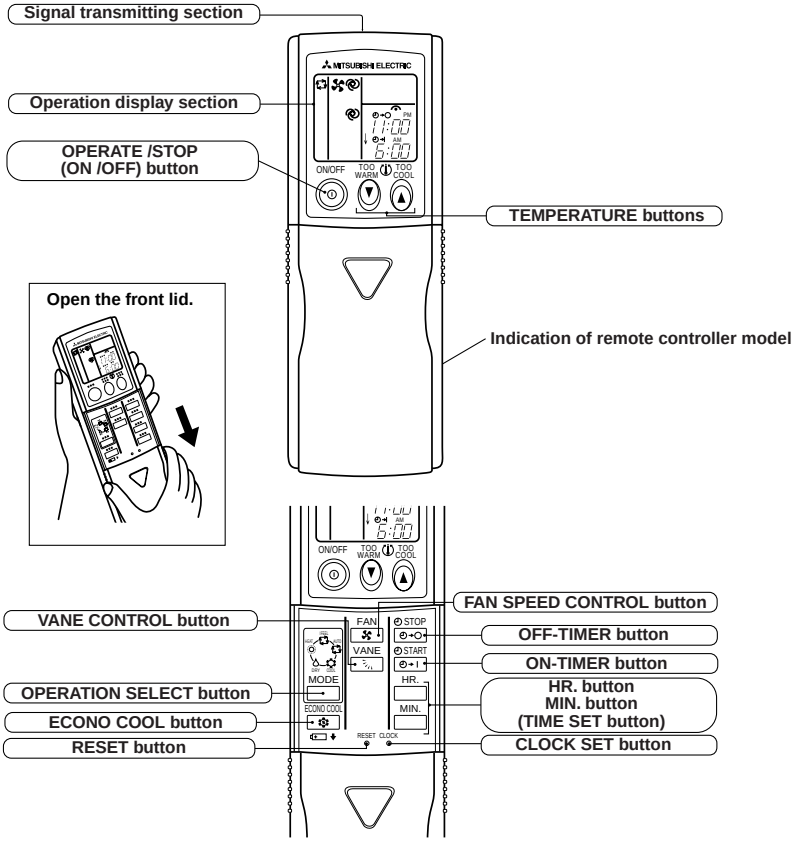

MCFZ-A18WV
MCFZ-A24WV

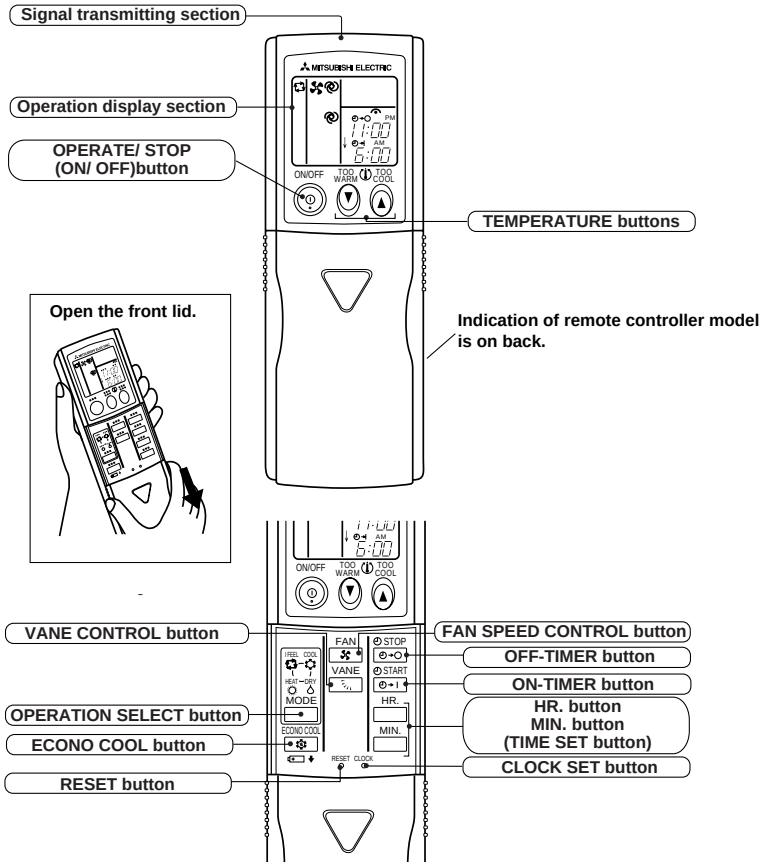

C.2.9 TROUBLESHOOTING

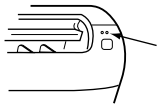

❋ Before taking measures, make sure that the symptom reappears, for accurate troubleshooting.

C.2.9.1 Cool Only

MCF-A12WV
MCF-A18WV
MCF-A24WV

Self check table

No.	Abnormal point	Operation indicator lamp	Symptom	Detection method
1	Indoor coil thermistor Room temperature thermistor	2-time flash 2.5-second OFF	Outdoor unit does not operate.	Detect Indoor coil/room temperature thermistor short or open circuit.
2	Indoor control system	4-time flash 2.5-second OFF	Outdoor unit does not operate.	When it cannot properly read data in the nonvolatile memory of the indoor electronic control P.C. board.

C.2.9.2 Heat Pump

MCFH-A12WV
MCFH-A18WV
MCFH-A24WV

Self check table

NO.	Abnormal point	Indication	Symptom	Detect method
1	Mis-wiring or Serial signal	0.5-second ON 0.5-second OFF	Outdoor unit does not run.	When serial signal stops for 4 to 5 seconds.
2	Indoor coil thermistor Room temperature thermistor	2-time flash 2.5-second OFF	Outdoor unit does not run.	Detect Indoor coil/room temperature thermistor short or open circuit every 8 seconds during operation.
3	Indoor control P.C. board	4-time flash 2.5-second OFF	Indoor unit does not run	When it cannot properly read data in the nonvolatile memory of the indoor electronic control P.C. board.
4	Outdoor thermistor	6-time flash 2.5-second OFF	Outdoor unit does not run	When the outdoor thermistors short or open after the compressor start-up.
5	**MCFH-A24WV MXZ type** Outdoor control P.C. board	7-time flash 2.5-second OFF	Outdoor unit does not run	When it cannot properly read data in the nonvolatile memory of the outdoor deicer P.C. board or outdoor electronic control P.C. board.
❋ 6	**MXZ type** Outdoor power system	5-time flash 2.5-second OFF	Outdoor unit does not run	When the compressor operation is continuously three times interrupted by over current protection within 1 minute after start-up , it stops operation.
❋ 7	**MXZ type** Operation mode setting	Operation Indicator Lighted Flashing 2.5-second OFF	Outdoor unit operates but indoor unit does not operate.	When the operation mode of each indoor unit is differently set to COOL(includes DRY) and HEAT at same time, the operation mode of indoor unit that has operated at first has the priority.

❋The indication is shown only when the indoor unit connects with the outdoor unit MXZ type.

C.2.9.3 Inverter Heat Pump

MCFZ-A12WV
MCFZ-A18WV
MCFZ-A24WV

• The following indication applies regardless of shape of the indicator.

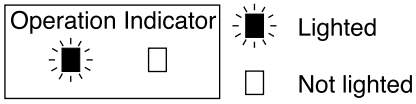

· Flashing of the OPERATION INDICATOR lamp (left-hand side lamp) indicates possible abnormalities.
· The OPERATION INDICATOR lamp (left-hand side lamp) is lighting during normal operation.

NOTE : Before taking measures, make sure that the symptom reappears for accurate troubleshooting.
Self check table

No.	Abnormal point	Operation indicator lamp	Symptom	Detection method
1	Mis-Wiring or Serial signal	0.5-second ON 0.5-second OFF	Outdoor unit does not operate.	3 minutes after power supply turns ON, when serial signal is not received.
2	Indoor coil thermistor Room tempera-ture thermistor	2-time flash 2.5-second OFF	Outdoor unit does not operate.	Detect Indoor coil/room temperature thermistor short or open circuit every 8 seconds during operation.
3	Indoor control system	4-time flash 2.5-second OFF	Outdoor unit does not operate.	When it cannot properly read data in the nonvolatile memory of indoor electronic control P.C. board.
4	Outdoor power system	5-time flash 2.5-second OFF	Outdoor unit does not operate.	When it consecutively occurs 3 times that compressor stops for overcurrent protection within 1 minute after start-up.
5	Outdoor thermistors	6-time flash 2.5-second OFF	Outdoor unit does not operate.	<Thermistor short> Thermistors are abnormal when they short after compressor start-up. <Thermistor open> Thermistors are abnormal when they open after compressor start-up. However, discharge temperature thermistor is abnormal when open circuit is detected more than 10 minutes after compressor start-up.
6	Outdoor control system	7-time flash 2.5-second OFF	Outdoor unit does not operate.	When it cannot properly read data in the nonvolatile memory of outdoor electronic control P.C. board.

MUZ-A12YV(H).....Refer to C-144 for MUZ-A12YV(H).
MUZ-A18YV.....Refer to C-145 for MUZ-A18YV.
MUZ-A24YV.....Refer to C-145 for MUZ-A24YV.

C.2.10 INSTALLATION PROCEDURE
C.2.10.1 Cool Only/Heat Pump
MCF-A12/18/24WV
MCFH-A12/18WV

These explanation are excerpted from the installation manual.

INSTALLATION DIAGRAM&ACCESSORIES

Remark:
Accessories of this unit are packed inside the unit. Please remove the front grille as shown in the right (See "FRONT GRILL REMOVAL"), and check accessories before installation.

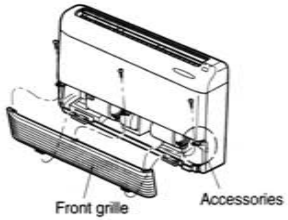

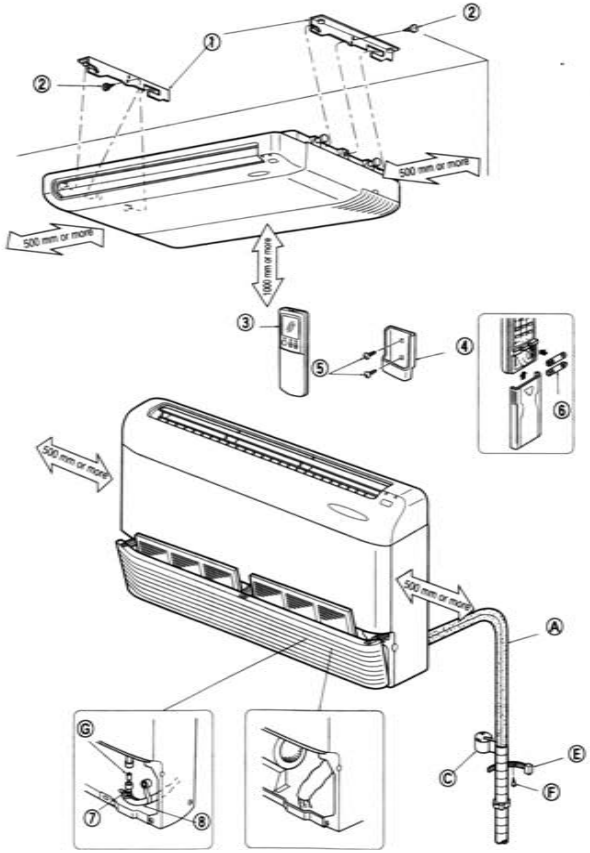

MU-A12YV
MUH-A12YV

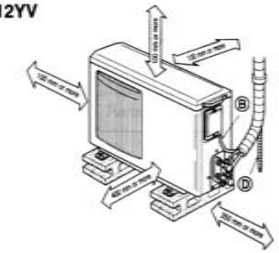

MUCF-A18WV
MUCF-A24WV
MUCFH-A18WV

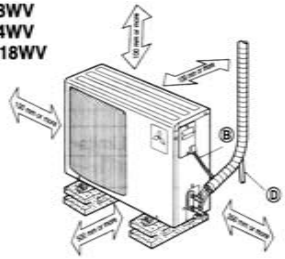

When the piping is to be attached to a wall containing metals (tin plated) or metal netting, use a chemically treated wooden piece 20 mm or thicker between the wall and the piping or wrap 7 to 8 turns of insulation vinyl tape around the piping.

Units should be installed by licensed contractor accordingly to local code requirement.

ACCESSORIES
Check the following parts before installation.

<Indoor unit>

	Item	Q'ty
①	Installation plate	2
②	Unit fixing screw 5 x 12 mm	2
③	Wireless remote controller	1
④	Remote controller holder	1
⑤	Fixing screw for ④ 3.5 x 16 mm (Black)	2
⑥	Battery (AAA) for remote controller	2
⑦	Drain hose	1
⑧	Drain pipe cover	1
⑨	Knockout cover	1
⑩	Screw for ⑨ 4 x 10 mm	2

<Outdoor unit>

	Item	Q'ty
⑪	Drain socket	1
⑫	Drain cap	2

PARTS TO BE PROVIDED AT YOUR SIDE

	Item	Q'ty
Ⓐ	Refrigerant pipe	1 set
Ⓑ	Indoor/outdoor connecting wire (2-core 1.0 mm^2)	1
Ⓒ	Piping tape	1
Ⓓ	Drain pipe (PVC pipe : OD ø26)	1
Ⓔ	Pipe fixing band for refrigerant pipe (The quantity depends on the pipe length.)	2 to 5
Ⓕ	Fixing screw for Ⓔ (The quantity depends on the pipe length.)	2 to 5
Ⓖ	Drain-joint pipe (PVC pipe : OD ø26, L=50 mm)	1
Ⓗ	Power supply cord	2
Ⓘ	Piping hole repair parts (Putty and Wall hole cover)	1
Ⓙ	Installation plate fixing bolt (M10)	4
Ⓚ	Nut, Spring washer for Ⓙ (M10)	4 set

OPTIONAL PARTS

Model	MCF(H)-A12WV	MCF(H)-A18WV	MCF-A24WV
Air cleaning filter	MAC-1200FT	←	←
Deodorizing filter	MAC-1700DF	←	←

REFRIGERANT AND DRAINAGE PIPE SIZES

Model		MCF(H)-A12WV	MCF(H)-A18WV	MCF-A24WV
Refrigerant pipe	Liquid	OD ø6.35 (1/4")	←	←
	Gas	OD ø12.7 (1/2")	←	OD ø15.88 (5/8")
Drainage pipe		Hard PVC pipe : OD ø26 (1")		

ACASE OF SUSPENDING INDOOR UNIT FROM THE CEILING

(1) MOUNTING INSTALLATION PLATE FIXING BOLTS

1. Determine the locations of installation plate fixing bolts.

- Use installation pattern to determine the locations of installation plate fixing bolts Ⓙ.
  ⓐ Installation pattern

Details are printed on pattern.
Attention : Surrounding temperature and humidity conditions may cause paper pattern to shrink or expand. (Measure dimensions before drilling holes.)

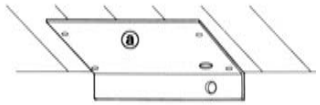

*Remove installation pattern after installation

2. Suspension structure (Give site of suspension strong structure).

■ Wood structure

- Select tie beam (one-story houses) or second-floor girder (two story houses) as reinforcement member.
- Use sturdy beams of at least 60 mm square for beam pitch of 900 mm or less or of at least 90 mm square for beam pitch of 900-1800 mm.
  ⓐ Pitch ⓑ Ceiling
  ⓒ Rafter ⓓ Bracket
  ⓔ Roof beam

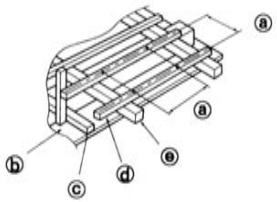

■ Ferroconcrete Structures

- Secure installation plate fixing bolts Ⓙ as shown at the right or use angle-stock bracework to install installation plate fixing bolts Ⓙ.
  ⓕ Use inserts rated at 100-150 kg each
  ⓖ Steel reinforcing rod
  Ⓙ Installation plate fixing bolts

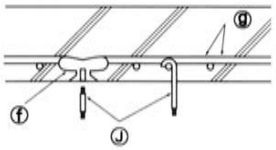

3. Installation plate fixing bolts pitch.

- Use the installation plate fixing bolts Ⓙ M10 (x 4 procure locally).
  ⓐ Indoor unit ⓑ Air outlet
  ① Installation plate

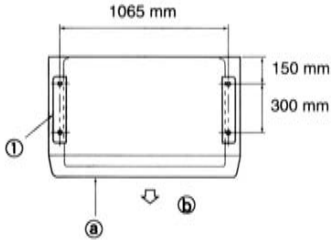

- Projecting dimension of installation fixing bolts Ⓙ from horizontal base line against which you fix installation plate ① as within at the right.
  ⓒ Horizontal base line ① Installation plate
  Ⓙ Installation fixing bolts

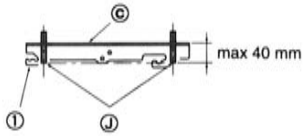

(2) FIXING OF INSTALLATION PLATES

1. Set installation plates to installation plate fixing bolts.

- Set installation plates ① to installation plate fixing bolts Ⓙ so that the distance between insides of installation plates is adjusted to length as shown in the right.
  ① Installation plate

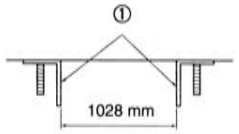

- Installation plates ① should be fixed on one way direction, as shown in Fig. 1.
  Don't fix as shown in Fig. 2.

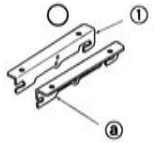

(Fig. 1)

(Fig. 2)

- Be sure to confirm letters "FRONT" in installation plates ①, set "FRONT" side to air outlet side of indoor unit.
  ⓐ "FRONT"
  ① Installation plate

2. In case of fixing installation plates ① above the ceiling, put installation plates fixing bolt through a nut, a spring washer, the installation plate, a spring washer, and double nut. (Fig. 3) In case of fixing installation plates ① forward the ceiling directly, also put installation plate fixing bolt through the installation plate, a spring washer, and double nuts. (Fig. 4)

ⓐ Ceiling Ⓚ-1 Nut (M10)
① Installation plate Ⓚ-2 Spring washer
Ⓙ Installation plate fixing bolt Ⓚ-3 Double nut (M10)

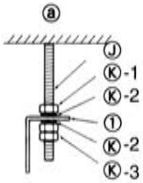

(Fig. 3)

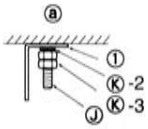

(Fig. 4)

3. Check that the four corners are horizontal with level gauge. (Fig. 5)

ⓐ Level gauge

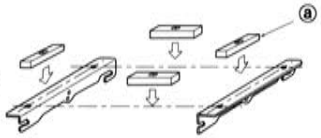

(Fig. 5)

(3) DRILLING HOLE

Determine the locations of holes for refrigerant pipe Ⓐ and drain pipe Ⓓ.

- Use the installation pattern as mentioned in (1).
- Be sure to confirm the dimensions as shown in the right.
  ⓐ Horizontal base line ⓑ Hole for refrigerant pipe
  ⓒ Hole for drain pipe
  ① Installation plate

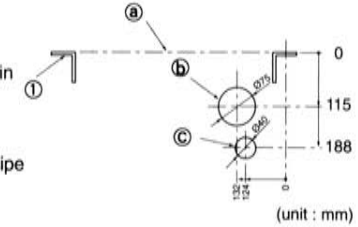

- Specially, drill the hole for drain pipe with designate dimension to keep an inclination.
  ⓓ Horizontal base line ⓔ Hanging bolt
  ⓕ Wall

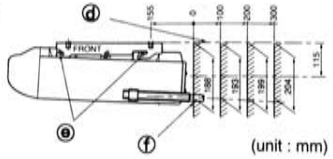

(4) FRONT GRILLE REMOVAL

- Remove front grille and transportation support.

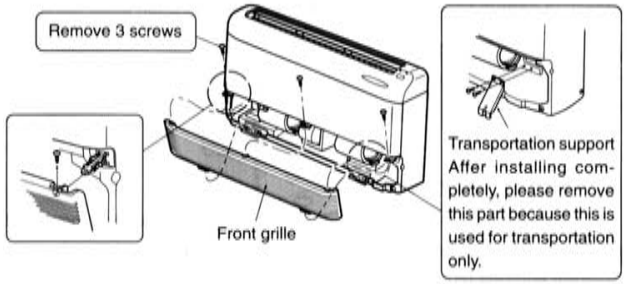

(5) OPENING KNOCKOUT HOLE

- Remove knockout holes with hammering it.

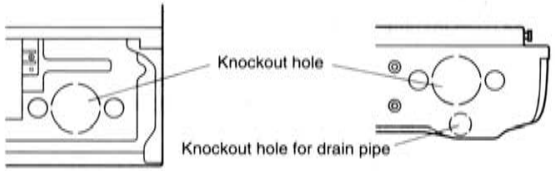

(6) FIXING UNIT TO INSTALLATION PLATES

1. Suspending unit from installation plates.

- Hoist unit so that hanging bolt (4) on the sides of unit fit into holes in installation plates

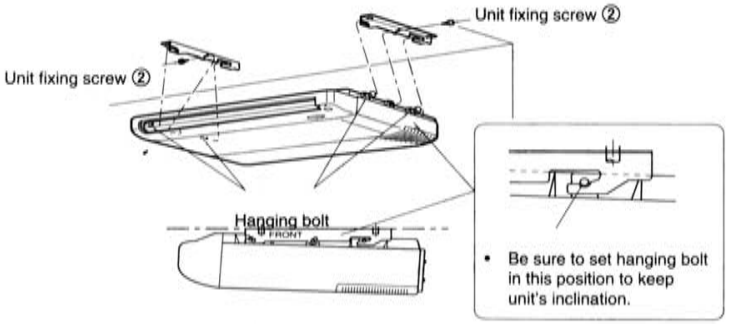

2. Securing unit to installation plates.

- Be sure to tighten unit fixing screw ② to unit securely.

A CASE OF INSTALLATING INDOOR UNIT ON THE WALL

(1) MOUNTING INSTALLATION PLATE FIXING BOLTS

1. Determine the locations of installation plate fixing bolts.

- Use installation pattern to determine the locations of installation plate fixing bolts Ⓙ.

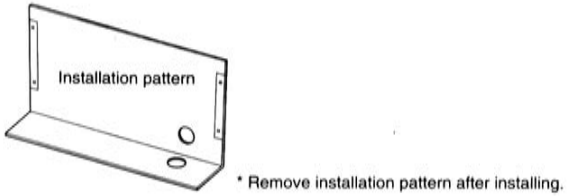

2. Sturdy wall

- Find structural material (such as stud) in the wall.

3. Installation plate fixing bolt pitch.

- See to (1) 3. (Page C-304)

(2) FIXING OF INSTALLATION PLATES

1. Set installation plates ① to installation plate fixing bolts Ⓙ.

- See to (2) 1. (Page C-304)

2. Put installation plate fixing bolt through spring washer (2), and double nuts.

- See to (2) 2 Fig. 4. (Page C-304)

(3) DRILLING HOLE

Determine the location of hole for refrigerant pipes and drain pipe.

- Use the installation pattern as mentioned in 4-2-(1).
- Be sure to confirm the dimensions as below.

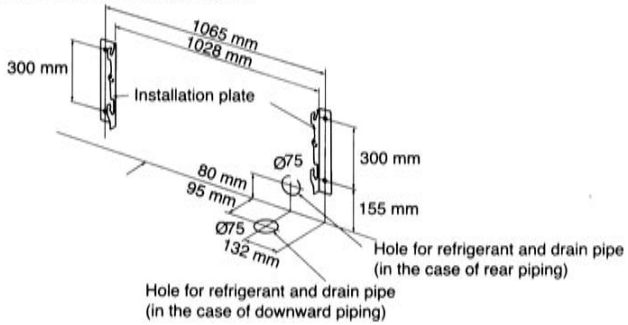

(4) FRONT GRILLE REMOVAL

- See to (4).

(5) OPENING KNOCKOUT HOLE

- See to (5).

(6) FIXING UNIT TO INSTALLATION PLATES

1. Suspending unit from installation plate.

- Hoist unit so that hanging bolt (4) on the sides of unit fit into holes in installation plate ①.

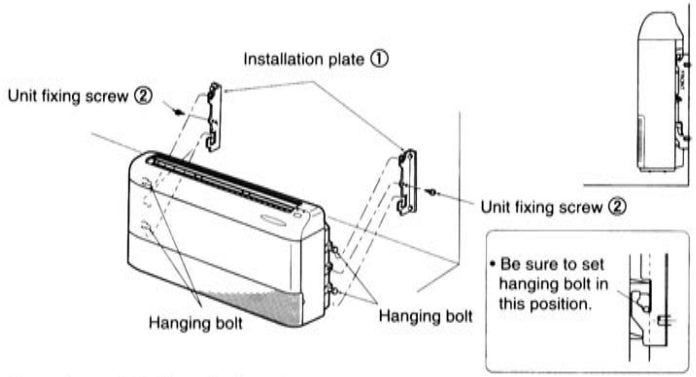

2. Securing unit to installation plates.

- Be sure to tighten unit fixing screw ② to unit securely.

KNOCKOUT COVER

- After removing the knockout holes, attach knockout cover ⑨ on the knockout hold edge (shown as below).

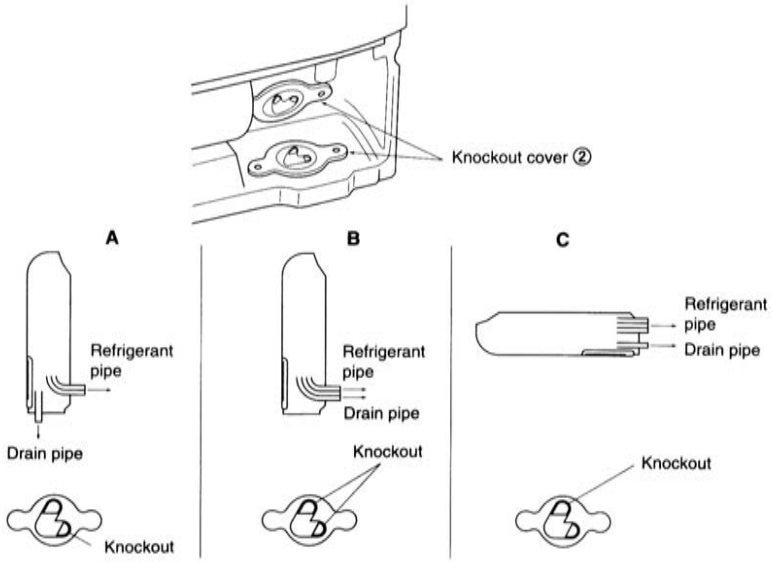

POWER SUPPLY AND CONNECTING WIRE SPECIFICATIONS

Use special room air conditioning circuit.

Rated voltage	Breaker capacity	Power supply cord
230 V	10 A	3-core 1.0 mm^2 or more, in conformity with Design 245 IEC 57

Indoor and Outdoor connecting wire Specification	Cable 2-core 1.0 mm^2, in conformity with Design 245 IEC 57.

- Peel off both ends of connecting wire and power supply cord as shown in the right.
- Be careful not to contact connecting wire with piping.
- Always install an earth longer than other cables.

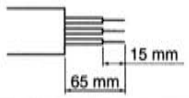

Connect to the plug, or to a power switch which has a gap of 3 mm or more when open to interrupt the source power phase.

⚠ **Warning:**

- **A means for disconnection of the supply with an isolation switch, or similar device, in all active conductors shall be incorporated in the fixed wiring.**
- **Never cut the power cord and connect it to other wires. It may cause a fire.**

4-5 INDOOR AND OUTDOOR CONNECTING WIRE CONNECTION

- Wiring connections should be made following the diagram.

1. Remove two screws and pull the terminal cover forward.

2. Be sure to fix the cable by cable clamp.

3. Replace the terminal cover securely.

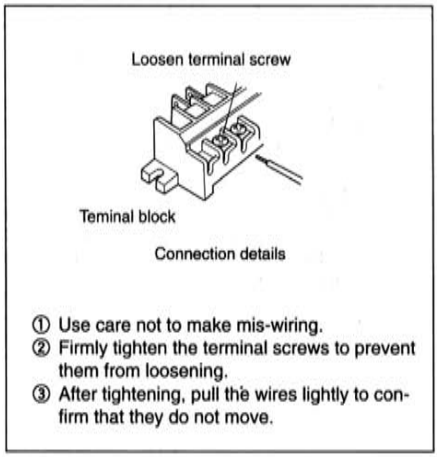

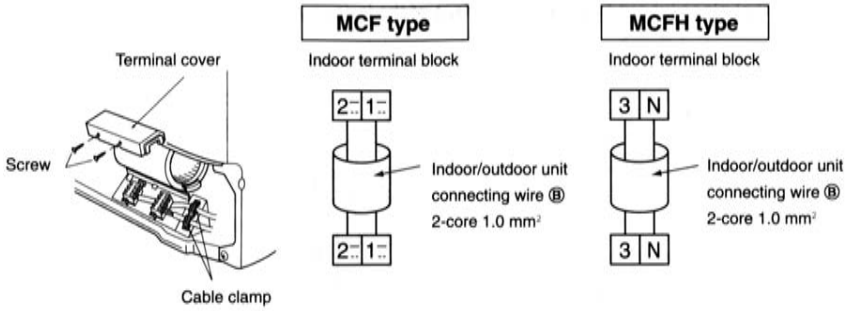

⚠ **Warning:**

- **Attach the electrical part cover securely. If it is attached incorrectly, it could result in a fire, an electric shock due to dust, water, etc.**
- **Use the specified indoor/outdoor unit connecting wire to connect the indoor and outdoor units and fix the wire to the terminal block securely so that no stress is applied to the connecting section of the terminal block. Incomplete connection or fixing of the wire could result in a fire.**
- **When connecting the power supply cord to the power supply source, be sure to connect each wire to the correct pole. Be sure to connect the Live wire side to the L terminal and connect the Neutral conductor side to the N terminal.**

REFRIGERANT PIPE WORK

- Refrigerant pipes which are connected at side of indoor unit must be processed as below, and processed figure will be differently made means of which the indoor unit is installed or which direction refrigerant pipes are connected in.

1. In case that pipes are cut out from back surface of the indoor unit. (Fig. 1)

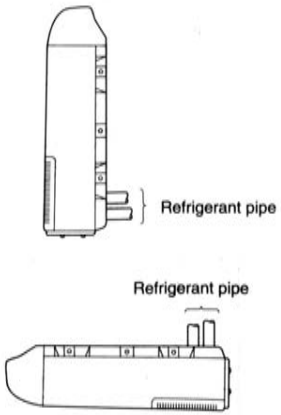

(Fig.1)

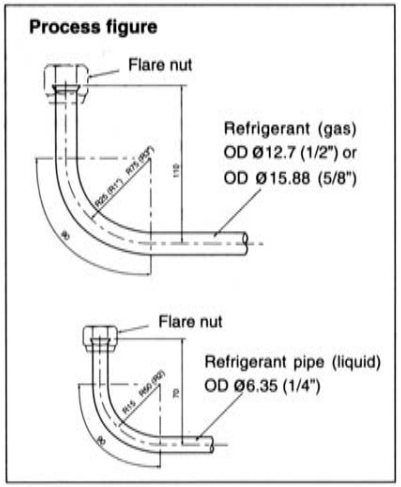

2. In case that pipes jut out from bottom surface of the indoor unit. (Fig. 2)

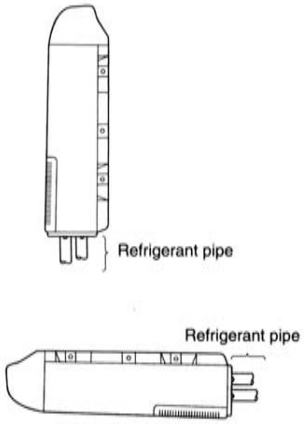

(Fig.2)

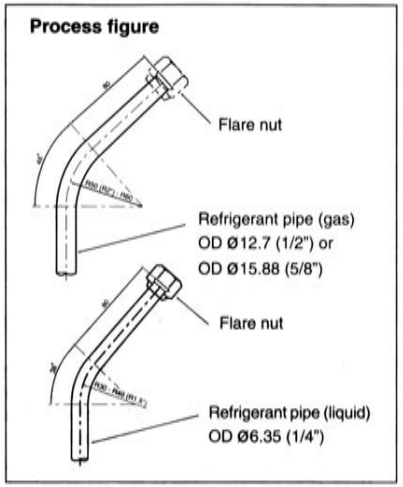

DRAIN PIPE CONNECTION

- Use hard PVC (ø26 mm O.D.) for drain pipe Ⓓ.
- Use drain pipe cover ⑧ which is provided in accessories, wind it around drain pipe Ⓓ in the indoor unit side.
- Use vinyl chloride adhesive for joints prevent leakage.
- When the drain pipe Ⓓ has to go through an indoor space, be sure to cover the drain pipe Ⓓ with insulation readily available in the market.
- For drain pipe connection, use care so as no extra force applies to unit side piping.

1. In case of connecting drain pipe Ⓓ to drain-joint bush directly.

- Be sure to connect drain pipe Ⓓ to drain-joint bush securely as shown in the right.
- Be sure to pass drain pipe Ⓓ with drain pipe cover through knockout hole on bottom surface so as to keep an inclination.

ⓐ Drain-joint bush
ⓑ Knockout
ⓒ PVC adhesive tape
ⓓ Adhesive
⑧ Drain pipe cover
Ⓓ Drain pipe (VP-20)

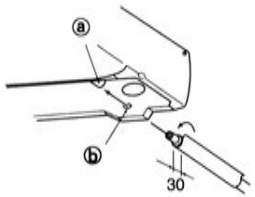

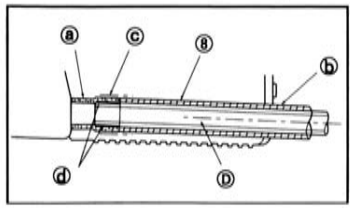

2. In case of connecting drain pipe Ⓓ to drain-joint bush through drain hose.

- Drain hose ⑦ which is contained in accessories is flexible, so use it when drain pipe Ⓓ should be alternated direction.
- Be sure to wind pipe cover which is provided in accessories around drain hose with vinyl tape.
- Cut VP-20 in dimension as shown at the right, and connect drain-joint bush with drain hose with adhesive.
  - ⓐ Drain-joint bush
  - ⓑ Tape
  - ⓒ Adhesive
  - ⑦ Drain hose
  - ⑧ Drain pipe cover
  - Ⓓ Drain pipe (VP-20)
  - Ⓖ Drain-joint pipe (VP-20)

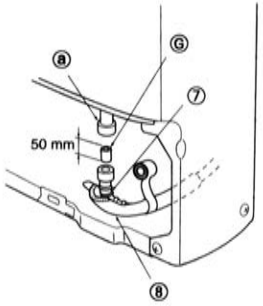

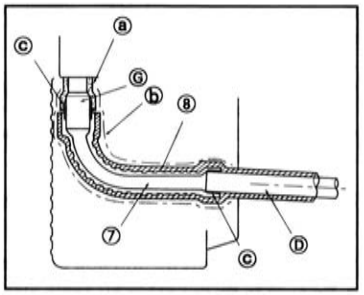

3.
- **Be sure that drain pipe Ⓓ tilts downward (1/100 or more) on outdoor side (drain side), and no traps or heaving exist.**
- **When the drain pipe Ⓓ is relatively long, provide support metal fixtures midway to eliminate waving.**
- **Odor trap at the end of drain pipe Ⓓ is not required.**
  - ⓐ Insulation
  - ⓑ Supporting metal fixture
  - ⓒ Downward inclination of 1/100 or more
  - ⓓ Air bleeder
  - ⓔ Do not raise
  - ⓕ Odor trap
  - ⓖ The end of drain hose is immersed in water
  - ⓗ Gap from the ground level is 50 mm or less
  - ⓘ Sewage ditch

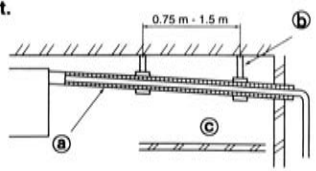

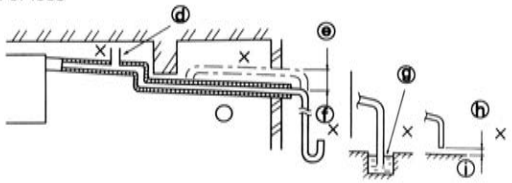

INDOOR/OUTDOOR UNIT CONNECTING WIRE CONNECTION AND OUTDOOR POWER SUPPLY CORD CONNECTION

- Connect the indoor/outdoor unit connecting wire Ⓑ from the indoor unit correctly on the terminal block.
- For future servicing, give extra length to connecting wire.
- Always install an earth, longer than other cables.

Model	Rated Voltage	Breaker capacity	
MCF-12 type	230 V	10A	Connect to the supply terminals and leave a contact separation of at least 3 mm at each pole to disconnect the source power pole. (When the power switch is shut off, it must disconnect all poles.)
MCF-18 type		15A	
MCF-24 type		25A	

- Peel off both ends of connecting wire (extension wire). When too long, or connected by cutting off the middle, peel off power supply wire to the size as shown in the right.
- Be careful not to contact connecting wire with piping.

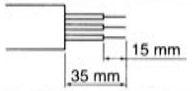

- For the power supply cord and the indoor/outdoor unit connecting wires, be sure to use the ones in compliance with the standards.
- Be sure to push the core until it is hidden and pull each cable to make sure that it is not pulled up incomplete insertion may cause a risk of burning the terminal blocks.

MCF-12 type	Power supply cord Specification	3-core 1.0 mm² or more, in conformity with Design 245 IEC 57. 3-core 1.5 mm² or more, in conformity with Design 245 IEC 57. 3-core 2.5 mm² or more, in conformity with Design 245 IEC 57.	10 m or less 15 m or less 25 m or less
	Indoor and Outdoor connecting wire Specification	Cable 2-core 1.0 mm², in conformity with Design 245 IEC 57.	
MCF-18 type	Power supply cord Specification	3-core 1.5 mm² or more, in conformity with Design 245 IEC 57. 3-core 2.5 mm² or more, in conformity with Design 245 IEC 57. 3-core 4.0 mm² or more, in conformity with Design 245 IEC 57.	10 m or less 15 m or less 25 m or less
	Indoor and Outdoor connecting wire Specification	Cable 2-core 1.0 mm², in conformity with Design 245 IEC 57.	
MCF-24 type	Power supply cord Specification	3-core 2.5 mm² or more, in conformity with Design 245 IEC 57. 3-core 4.0 mm² or more, in conformity with Design 245 IEC 57. 3-core 6.0 mm² or more, in conformity with Design 245 IEC 57.	10 m or less 15 m or less 25 m or less
	Indoor and Outdoor connecting wire Specification	Cable 2-core 1.0 mm², in conformity with Design 245 IEC 57.	

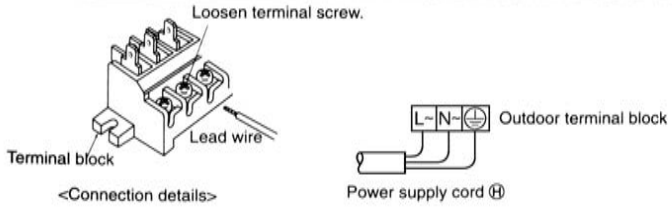

⚠ **Caution:**
- **Use care not to make mis-wiring.**
- **Firmly tighten the terminal screws to prevent them from loosening.**
- **After tightening, pull the wires lightly to confirm that they do not move.**

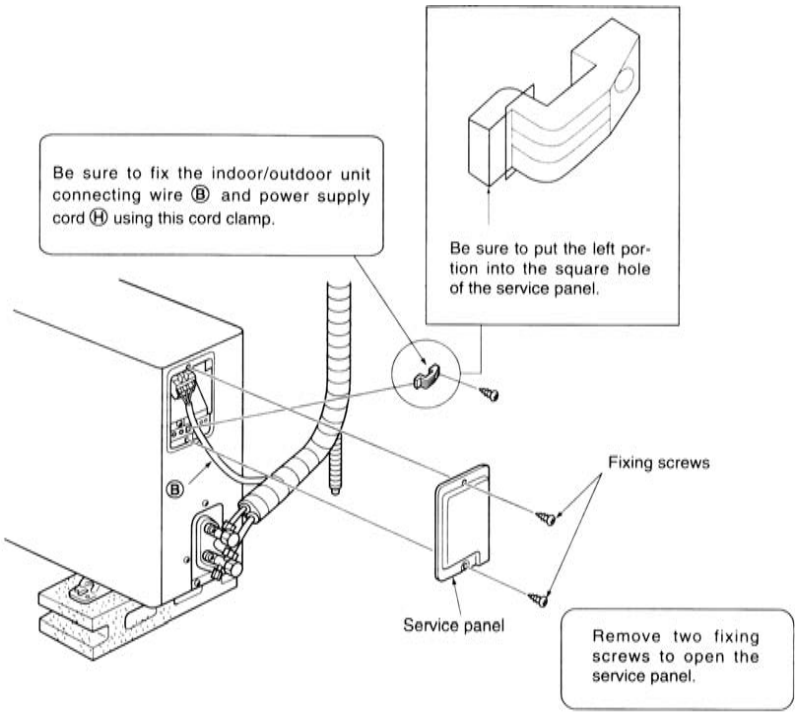

⚠ **Warning:**
Be sure to attach the service panel of the outdoor unit securely. If it is not attached correctly, it could result in a fire or an electric shock due to dust, water, etc.

TEST RUN

- Before performing the test run, recheck for any wrong wiring.
  Wrong wiring prevents normal operation or results in blown fuse disabling operation.
- The test run can be initiated by using EMERGENCY OPERATION switch (press button switch). The EMERGENCY OPERATION switch is pressed, the unit will start the test run (continuous operation) for 30 minutes in COOL MODE or HEAT MODE, depending on which mode is selected. During this 30 minutes a thermostat does not work. After 30 minutes the unit will start the EMERGENCY OPERATION at fixed temperature setting of 24°C in COOL MODE or HEAT MODE.
- Perform test run in the following procedure.

PROCEDURE

- Press the EMERGENCY OPERATION switch.
  ① Press it once, and the EMERGENCY COOL MODE starts.

> If the left side lamp of the operation indicator blinks every 0.5 seconds, inspect the in/out connecting wire Ⓑ for mis-wiring.

  ② Press it once more, and the EMERGENCY HEAT MODE starts.
  ③ Press it once more, and the operation stops. (The operation mode changes in order of ① - ③ every press of the EMERGENCY OPERATION switch.)

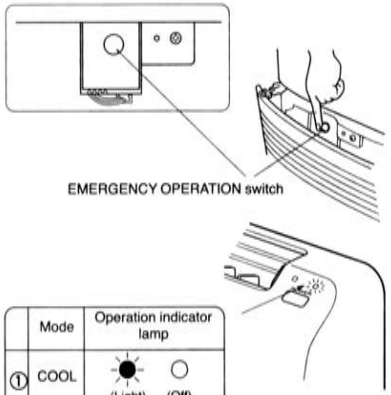

	Mode	Operation indicator lamp	
①	COOL	(Light)	(Off)
②	HEAT	(Off)	(Light)
③	STOP	(Lights not turn on)	

Checking the remote (infrared) signal reception
Press the ON/OFF button on the remote control and check that an electronic sound is heard from the indoor unit. Press the ON/OFF button again to turn the air conditioner off.

> If the indoor unit is operated with the remote control, both the trial and emergency operations are released by commands from the remote control.

- Once the compressor stops, the restart preventive device operates so the compressor will not operate for 3 minutes to protect the air conditioner.

AUTO RESTART FUNCTION

When the indoor unit is controlled with the remote controller, the operation mode, set temperature, and the fan speed are memorized by the indoor electronic control P.C. board. The auto restart function sets to work the moment the power has restored after power failure, then, the unit will restart automatically. If the unit is operated in "I FEEL CONTROL" mode before power failure, the operation is not memorized. In "I FEEL CONTROL" mode, the operation is decided by the initial room temperature at (re)start.

Notes:

- The operation settings are memorized when 10 seconds have passed after the remote controller was operated.
- If the main power is turned off or a power failure occurs while AUTO START/STOP timer is active, the timer setting is cancelled. As this model is equipped with the auto restart function, the air conditioner should start operating at the same time that a power has restored.
- If the unit has been off with the remote controller before power failure, the auto restart function does not work as the power button of the remote controller is off.
- To prevent breaker off due to the rush of starting current, systematize other home appliance not to turn on at the same time.

These explanation are excerpted from the installation manual.

C.2.10.2 Heat Pump

MCFH-A24WV

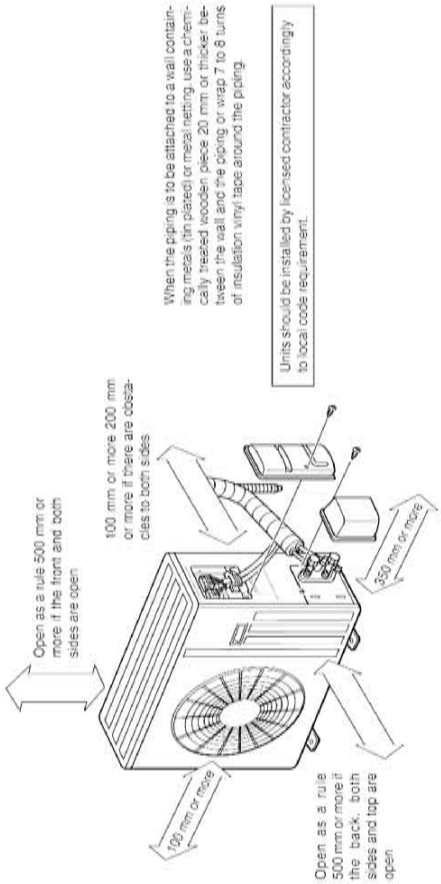

ACCESSORIES

Check the following parts before installation.

<Indoor unit>

	Item	Q'ty
①	Installation plate	2
②	Unit fixing screw 5 × 12 mm	2
③	Wireless remote controller	1
④	Remote controller holder	1
⑤	Fixing screw for ④ 3.5 × 16 mm (Black)	2
⑥	Battery (AAA) for remote controller	2
⑦	Drain hose	1
⑧	Drain pipe cover	1
⑨	Knockout cover	1
⑩	Screw for ⑧ 4 × 10 mm	2

<Outdoor unit>

⑪	Drain socket	1
⑫	Drain cap	2

PARTS TO BE PROVIDED AT YOUR SIDE

	Item	Q'ty
Ⓐ	Refrigerant pipe	1 set
Ⓑ	Indoor/outdoor connecting wire (2-core 1.0 mm²)	1
Ⓒ	Piping tape	1
Ⓓ	Drain pipe (PVC pipe : OD ø26)	1
Ⓔ	Pipe fixing band for refrigerant pipe (The quantity depends on the pipe length.)	2 to 5
Ⓕ	Fixing screw for Ⓔ (The quantity depends on the pipe length.)	2 to 5
Ⓖ	Drain-joint pipe (PVC pipe : OD ø26, L=50 mm)	1
Ⓗ	Power supply cord	2
Ⓘ	Piping hole repair parts (Putty and Wall hole cover)	1
Ⓙ	Installation plate fixing bolt (M10)	4
Ⓚ	Nut, Spring washer for Ⓙ (M10)	4 set

OPTIONAL PARTS

Name	Parts No.
Air cleaning filter	MAC-1200FT
Deodorizing filter	MAC-1700DF

REFRIGERANT AND DRAIN PIPE SIZES

Refrigerant pipe	Liquid	OD ø6.35
	Gas	OD ø15.88
Drain pipe		Hard PVC pipe : OD ø26

INSTALLATION DIAGRAM&ACCESSORIES

Remark:
Accessories of this unit are packed inside the unit. Please remove the front grille as shown in the right (See "FRONT GRILL REMOVAL"), and check accessories before installation.

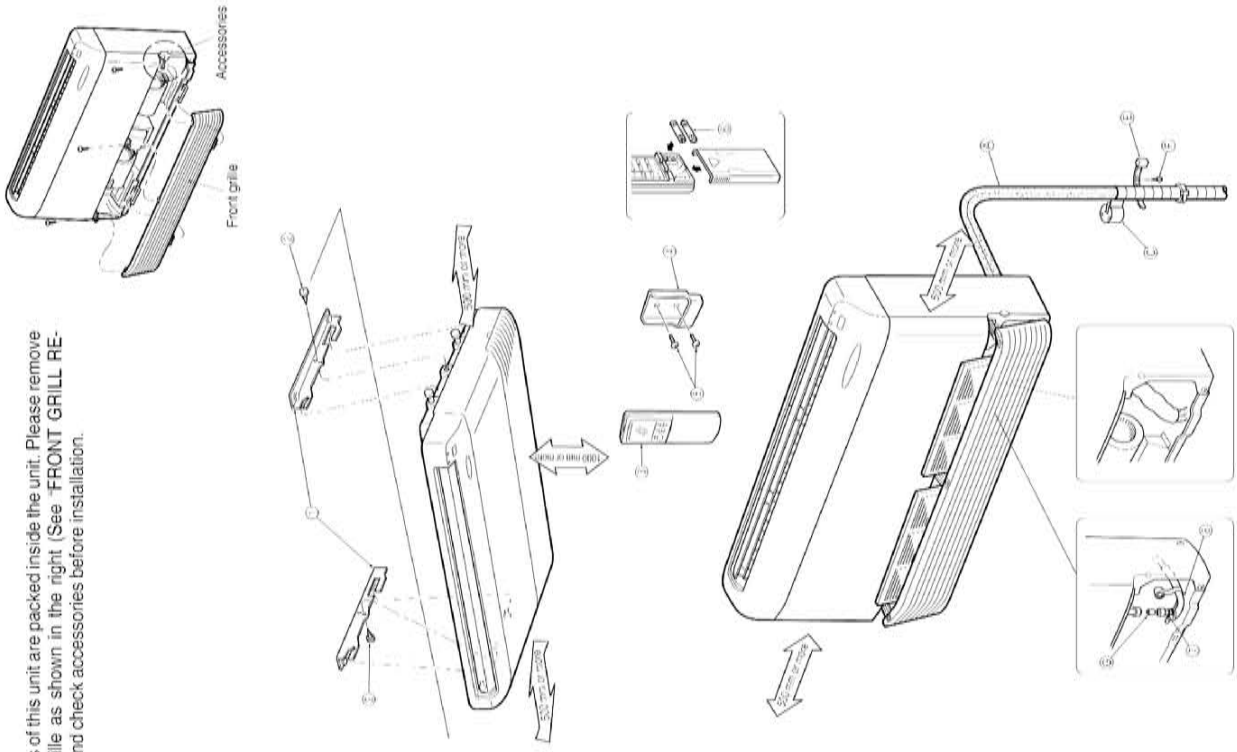

A CASE OF SUSPENDING INDOOR UNIT FROM THE CEILING

(1) MOUNTING INSTALLATION PLATE FIXING BOLTS

1. Determine the locations of installation plate fixing bolts.

- Use installation pattern to determine the locations of installation plate fixing bolts Ⓙ.
  - ⓐ Installation pattern

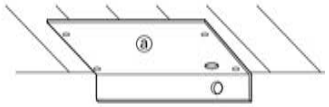

*Remove installation pattern after installatio

Details are printed on pattern.

Attention: Surrounding temperature and humidity conditions may cause paper pattern to shrink or expand. (Measure dimensions before drilling holes.)

2. Suspension structure (Give site of suspension strong structure).

■ Wood structure

- Select tie beam (one-story houses) or second-floor girder (two story houses) as reinforcement member.
- Use sturdy beams of at least 60 mm square for beam pitch of 900 mm or less or of at least 90 mm square for beam pitch of 900-1800 mm.
  - ⓐ Pitch
  - ⓑ Ceiling
  - ⓒ Rafter
  - ⓓ Bracket
  - ⓔ Roof beam

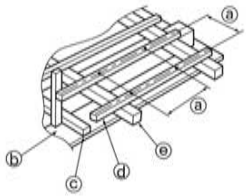

■ Ferroconcrete Structures

- Secure installation plate fixing bolts Ⓙ as shown at the right or use angle-stock bracework to install installation plate fixing bolts Ⓙ.
  - ⓕ Use inserts rated at 100-150 kg each
  - ⓖ Steel reinforcing rod
  - Ⓙ Installation plate fixing bolts

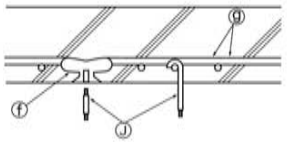

3. Installation plate fixing bolts pitch.

- Use the installation plate fixing bolts Ⓙ M10 (× 4 procure locally).
  - ⓐ Indoor unit
  - ⓑ Air outlet
  - ① Installation plate

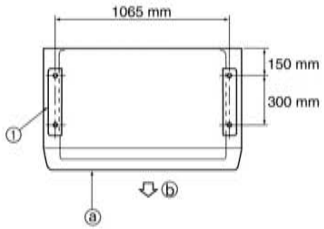

- Projecting dimension of installation fixing bolts Ⓙ from horizontal base line against which you fix installation plate ① as within at the right.
  - ⓒ Horizontal base line
  - ① Installation plate
  - Ⓙ Installation fixing bolts

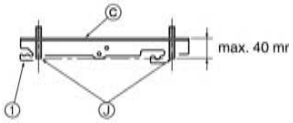

(2) FIXING OF INSTALLATION PLATES

1. Set installation plates to installation plate fixing bolts.

- Set installation plates ① to installation plate fixing bolts Ⓙ so that the distance between insides of installation plates is adjusted to length as shown in the right.
  - ① Installation plate

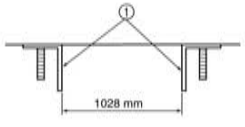

- Installation plates ① should be fixed on one way direction, as shown in Fig. 1.
  Don't fix as shown in Fig. 2.
- Be sure to confirm letters "FRONT" in installation plates ①, set "FRONT" side to air outlet side of indoor unit.
  - ⓐ "FRONT"
  - ① Installation plate

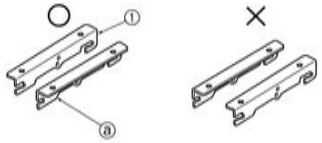

(Fig. 1) (Fig. 2)

2. In case of fixing installation plates ① above the ceiling, put installation plates fixing bolt through a nut, a spring washer, the installation plate, a spring washer, and double nut. (Fig. 3) In case of fixing installation plates ① forward the ceiling directly, also put installation plate fixing bolt through the installation plate, a spring washer, and double nuts. (Fig. 4)

- ⓐ Ceiling
- ① Installation plate
- Ⓙ Installation plate fixing bolt
- Ⓚ-1 Nut (M10)
- Ⓚ-2 Spring washer
- Ⓚ-3 Double nut (M10)

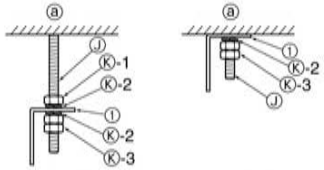

(Fig. 3) (Fig. 4)

3. Check that the four corners are horizontal with level gauge. (Fig. 5)

- ⓐ Level gauge

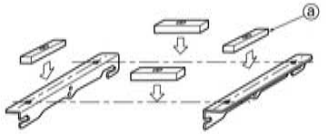

(Fig. 5)

(3) DRILLING HOLE

Determine the locations of holes for refrigerant pipe Ⓐ and drain pipe Ⓓ.

- Use the installation pattern as mentioned in 4-1-(1).
- Be sure to confirm the dimensions as shown in the right.
  - ⓐ Horizontal base line
  - ⓑ Hole for refrigerant pipe
  - ⓒ Hole for drain pipe
  - ① Installation plate

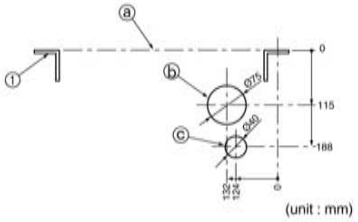

(unit : mm)

- Specially, drill the hole for drain pipe with designate dimension to keep an inclination.
  - ⓓ Horizontal base line
  - ⓔ Hanging bolt
  - ⓕ Wall

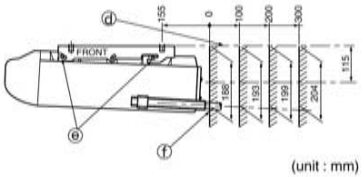

(unit : mm)

A CASE OF INSTALLATING INDOOR UNIT ON THE WALL

(1) MOUNTING INSTALLATION PLATE FIXING BOLTS

1. Determine the locations of installation plate fixing bolts.

- Use installation pattern to determine the locations of installation plate fixing bolts Ⓙ.

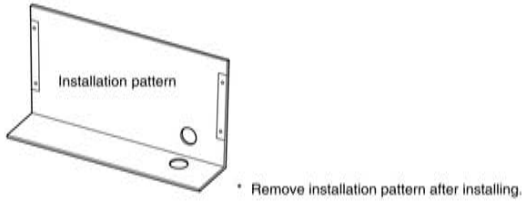

2. Sturdy wall

- Find structural material (such as stud) in the wall.

3. Installation plate fixing bolt pitch.

- See to (1) . (Page C-312)

(2) FIXING OF INSTALLATION PLATES

1. Set installation plates ① to installation plate fixing bolts Ⓙ.

- See to (2) . (Page C-312)

2. Put installation plate fixing bolt through spring washer (2), and double nuts.

- See to (2) Fig. 4. (Page C-312)

(3) DRILLING HOLE

Determine the location of hole for refrigerant pipes and drain pipe.

- Use the installation pattern as mentioned in (1).
- Be sure to confirm the dimensions as below.

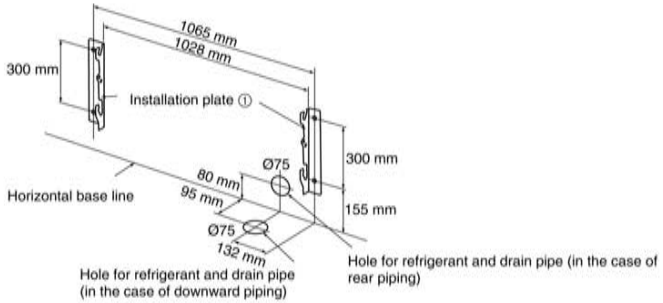

(4) FRONT GRILLE REMOVAL

- See to (4).

(5) OPENING KNOCKOUT HOLE

- See to (5).

(4) FRONT GRILLE REMOVAL

- Remove front grille and transportation support.

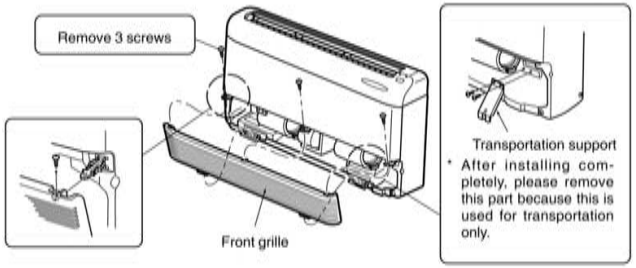

(5) OPENING KNOCKOUT HOLE

- Remove knockout holes with hammering it.

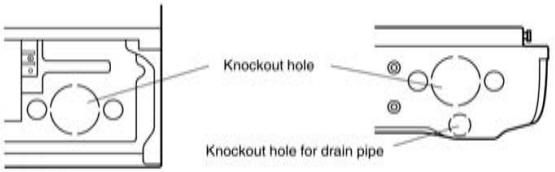

(6) FIXING UNIT TO INSTALLATION PLATES

1. Suspending unit from installation plates.

- Hoist unit so that hanging bolt (4) on the sides of unit fit into holes in installation plates ①.

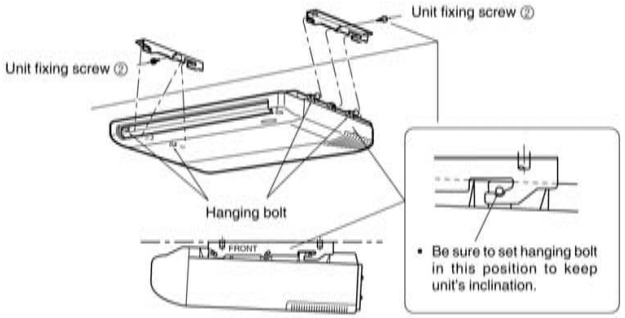

2. Securing unit to installation plates.

- Be sure to tighten unit fixing screw ② to unit securely.

(6) FIXING UNIT TO INSTALLATION PLATES

1. Suspending unit from installation plate.

- Hoist unit so that hanging bolt (4) on the sides of unit fit into holes in installation plate ①.

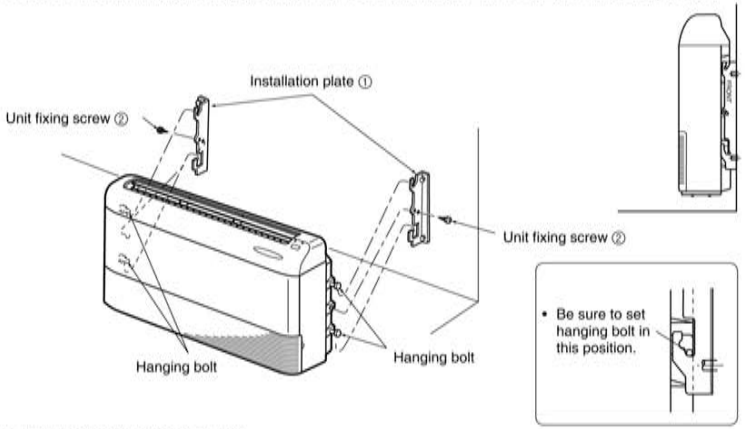

2. Securing unit to installation plates.

- Be sure to tighten unit fixing screw ② to unit securely.

KNOCKOUT COVER

- After removing the knockout holes, attach knockout cover ⑨ on the knockout hold edge (shown as below).

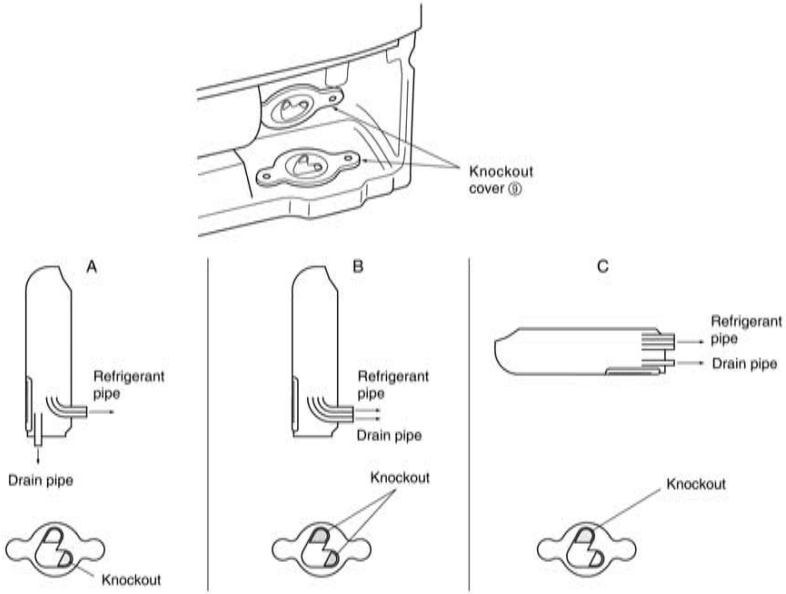

POWER SUPPLY AND CONNECTING WIRE SPECIFICATIONS

Use special room air conditioning circuit.

Rated voltage	Breaker capacity	Power supply cord
230 V	10 A	3-core 1.0 mm² or more, in conformity with Design 245 IEC 57

Indoor and Outdoor connecting wire Specification	Cable 2-core 1.0 mm², in conformity with Design 245 IEC 57.

- Peel off both ends of connecting wire and power supply cord as shown in the right.
- Be careful not to contact connecting wire with piping.

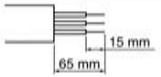

Connect to the plug, or to a power switch which has a gap of 3 mm or more when open to interrupt the source power phase.

⚠ Warning:

- **A means for disconnection of the supply with an isolation switch, or similar device, in all active conductors shall be incorporated in the fixed wiring.**
- **Never cut the power cord and connect it to other wires. It may cause a fire.**

INDOOR AND OUTDOOR CONNECTING WIRE CONNECTION

- Wiring connections should be made following the diagram.

1. Remove two screws and pull the terminal cover forward.

2. Be sure to fix the cable by cable clamp.

3. Replace the terminal cover securely.

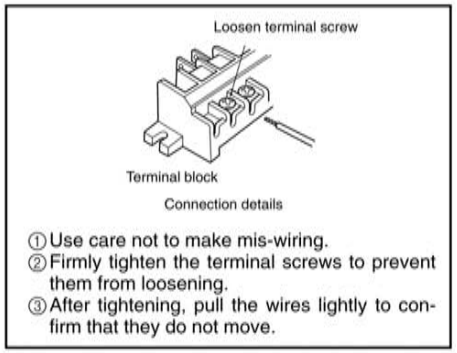

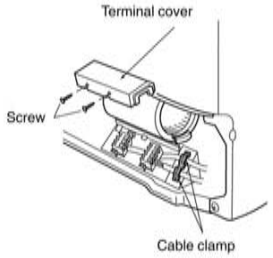

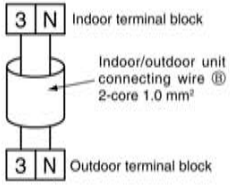

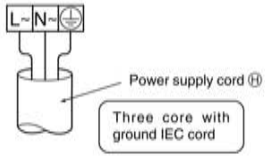

⚠ **Warning:**

- **Attach the electrical part cover securely. If it is attached incorrectly, it could result in a fire, an electric shock due to dust, water, etc.**
- **Use the specified indoor/outdoor unit connecting wire to connect the indoor and outdoor units and fix the wire to the terminal block securely so that no stress is applied to the connecting section of the terminal block. Incomplete connection or fixing of the wire could result in a fire.**
- **When connecting the power supply cord to the power supply source, be sure to connect each wire to the correct pole. Be sure to connect the Live wire side to the L terminal and connect the Neutral conductor side to the N terminal.**

REFRIGERANT PIPE WORK

- Refrigerant pipes which are connected at side of indoor unit must be processed as below, and processed figure will be differently made means of which the indoor unit is installed or which direction refrigerant pipes are connected in.

1. In case that pipes are cut out from back surface of the indoor unit. (Fig. 1)

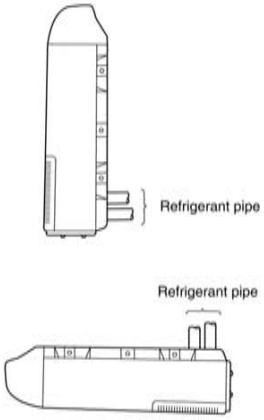

(Fig. 1)

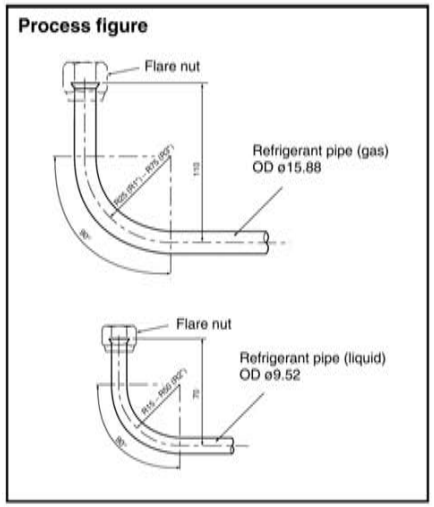

2. In case that pipes jut out from bottom surface of the indoor unit. (Fig. 2)

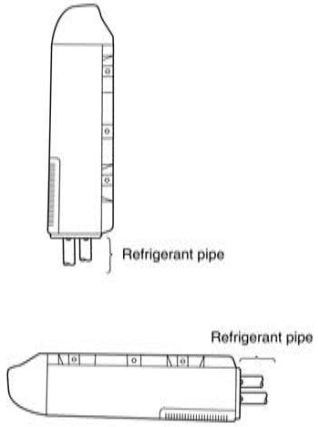

(Fig. 2)

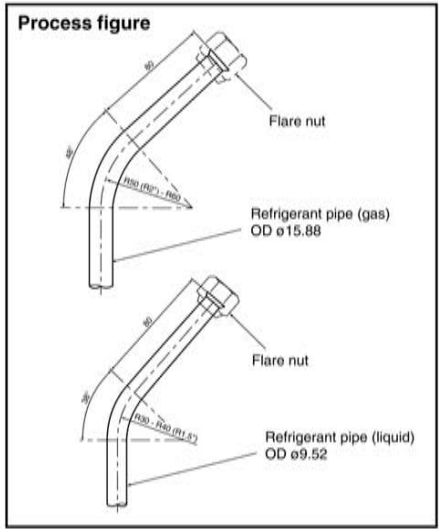

DRAIN PIPE CONNECTION

- Use hard PVC (ø26 mm O.D.) for drain pipe Ⓓ.
- Use drain pipe cover Ⓖ which is provided in accessories, wind it around drain pipe Ⓓ in the indoor unit side.
- Use vinyl chloride adhesive for joints prevent leakage.
- When the drain pipe Ⓓ has to go through an indoor space, be sure to cover the drain pipe Ⓓ with insulation readily available in the market.
- For drain pipe connection, use care so as no extra force applies to unit side piping.

1. In case of connecting drain pipe Ⓓ to drain-joint bush directly.

- Be sure to connect drain pipe Ⓓ to drain-joint bush securely as shown in the right.
- Be sure to pass drain pipe Ⓓ with drain pipe cover through knockout hole on bottom surface so as to keep an inclination.

ⓐ Drain-joint bush
ⓑ Knockout
ⓒ PVC adhesive tape
ⓓ Adhesive
ⓖ Drain pipe cover
Ⓓ Drain pipe (VP-20)

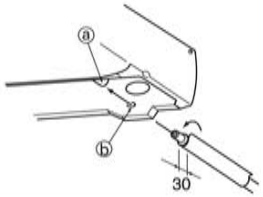

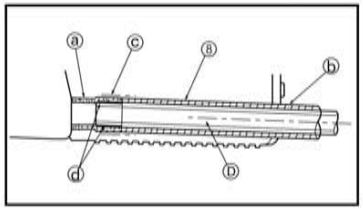

2. In case of connecting drain pipe Ⓓ to drain-joint bush through drain hose.

- Drain hose ⑦ which is contained in accessories is flexible, so use it when drain pipe Ⓓ should be alternated direction.
- Be sure to wind pipe cover which is provided in accessories around drain hose with vinyl tape.
- Cut VP-20 in dimension as shown at the right, and connect drain-joint bush with drain hose with adhesive.
  - ⓐ Drain-joint bush
  - ⓑ Tape
  - ⓒ Adhesive
  - ⑦ Drain hose
  - ⓖ Drain pipe cover
  - Ⓓ Drain pipe (VP-20)
  - Ⓖ Drain-joint pipe (VP-20)

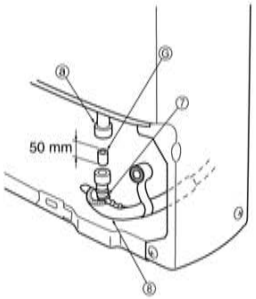

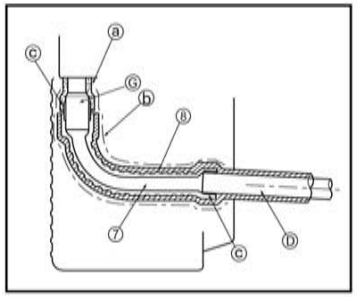

3.

- Be sure that drain pipe Ⓓ tilts downward (1/100 or more) on outdoor side (drain side), and no traps or heaving exist.
- When the drain pipe Ⓓ is relatively long, provide support metal fixtures midway to eliminate waving.
- Odor trap at the end of drain pipe Ⓓ is not required.
  - ⓐ Insulation
  - ⓑ Supporting metal fixture
  - ⓒ Downward inclination of 1/100 or more
  - ⓓ Air bleeder
  - ⓔ Do not raise
  - ⓕ Odor trap
  - ⓖ The end of drain hose is immersed in water
  - ⓗ Gap from the ground level is 50 mm or less
  - ⓘ Sewage ditch

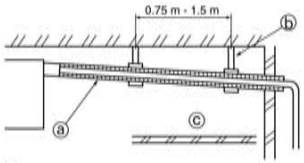

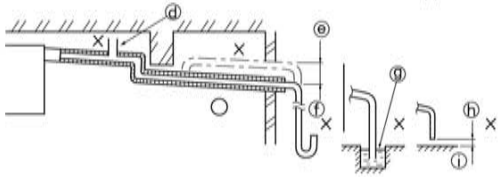

INDOOR/OUTDOOR UNIT CONNECTING WIRE CONNECTION AND OUTDOOR POWER SUPPLY CORD CONNECTION

- Connect the indoor/outdoor unit connecting wire Ⓑ from the indoor unit correctly on the terminal block.
- For future servicing, give extra length to connecting wire.

Rated Voltage	Breaker capacity	Connect to the supply terminals and leave a contact separation of at least 3 mm at each pole to disconnect the source power pole. (When the power switch is shut off, it must disconnect all poles.)
230 V	25 A	

- Peel off both ends of connecting wire (extension wire). When too long, or connected by cutting off the middle, peel off power supply wire to the size as shown in the right.
- Be careful not to contact connecting wire with piping.

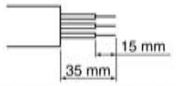

- For the power supply cord and the indoor/outdoor unit connecting wires, be sure to use the ones in compliance with the standards.
- Be sure to push the core until it is hidden and pull each cable to make sure that it is not pulled up incomplete insertion may cause a risk of burning the terminal blocks.

Power supply cord Specification	3-core 2.5 mm² or more, in conformity with Design 245 IEC 57.	10 m or less
	3-core 4.0 mm² or more, in conformity with Design 245 IEC 57.	15 m or less
	3-core 6.0 mm² or more, in conformity with Design 245 IEC 57.	25 m or less
Indoor and Outdoor connecting wire Specification	Cable 2-core 1.0 mm², in conformity with Design 245 IEC 57.	

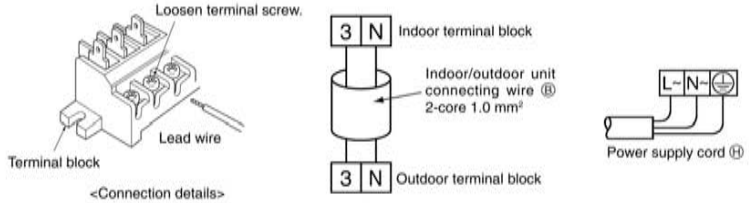

<Connection details>

⚠ **Caution:**

- **Use care not to make mis-wiring.**
- **Firmly tighten the terminal screws to prevent them from loosening.**
- **After tightening, pull the wires lightly to confirm that they do not move.**

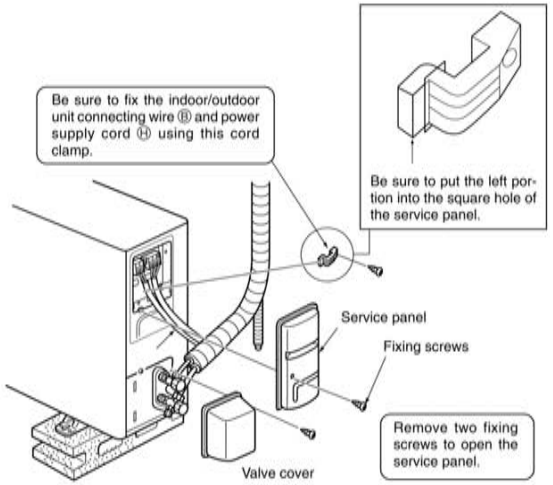

⚠ **Warning:**
Be sure to attach the service panel of the outdoor unit securely. If it is not attached correctly, it could result in a fire or an electric shock due to dust, water, etc.

TEST RUN

- Before performing the test run, recheck for any wrong wiring.
  Wrong wiring prevents normal operation or results in blown fuse disabling operation.
- The test run can be initiated by using EMERGENCY OPERATION switch (press button switch). The EMERGENCY OPERATION switch is pressed, the unit will start the test run (continuous operation) for 30 minutes in COOL MODE or HEAT MODE, depending on which mode is selected. During this 30 minutes a thermostat does not work. After 30 minutes the unit will start the EMERGENCY OPERATION at fixed temperature setting of 24°C in COOL MODE or HEAT MODE.
- Perform test run in the following procedure.

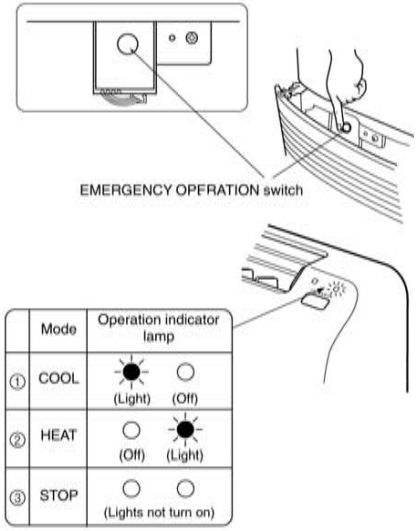

PROCEDURE

- Press the EMERGENCY OPERATION switch.
  ① Press it once, and the EMERGENCY COOL MODE starts.

If the left side lamp of the operation indicator blinks every 0.5 seconds, inspect the in/out connecting wire Ⓑ for mis-wiring.

  ② Press it once more, and the EMERGENCY HEAT MODE starts.
  ③ Press it once more, and the operation stops.
  (The operation mode changes in order of ① - ③ every press of the EMERGENCY OPERATION switch.)

Checking the remote (infrared) signal reception

Press the ON/OFF button on the remote control and check that an electronic sound is heard from the indoor unit. Press the ON/OFF button again to turn the air conditioner off.

If the indoor unit is operated with the remote control, both the trial and emergency operations are released by commands from the remote control.

- Once the compressor stops, the restart preventive device operates so the compressor will not operate for 3 minutes to protect the air conditioner.

AUTO RESTART FUNCTION

When the indoor unit is controlled with the remote controller, the operation mode, set temperature, and the fan speed are memorized by the indoor electronic control P.C. board. The auto restart function sets to work the moment the power has restored after power failure, then, the unit will restart automatically. If the unit is operated in "I FEEL CONTROL" mode before power failure, the operation is not memorized. In "I FEEL CONTROL" mode, the operation is decided by the initial room temperature at (re)start.

Notes:

- The operation settings are memorized when 10 seconds have passed after the remote controller was operated.
- If the main power is turned off or a power failure occurs while AUTO START/STOP timer is active, the timer setting is cancelled. As this model is equipped with the auto restart function, the air conditioner should start operating at the same time that a power has restored.
- If the unit has been off with the remote controller before power failure, the auto restart function does not work as the power button of the remote controller is off.
- To prevent breaker off due to the rush of starting current, systematize other home appliance not to turn on at the same time.

These explanation are excerpted from the installation manual.

C.2.10.3 Inverter Heat Pump

MCFZ-A12WV
MUZ-A12YV(H)

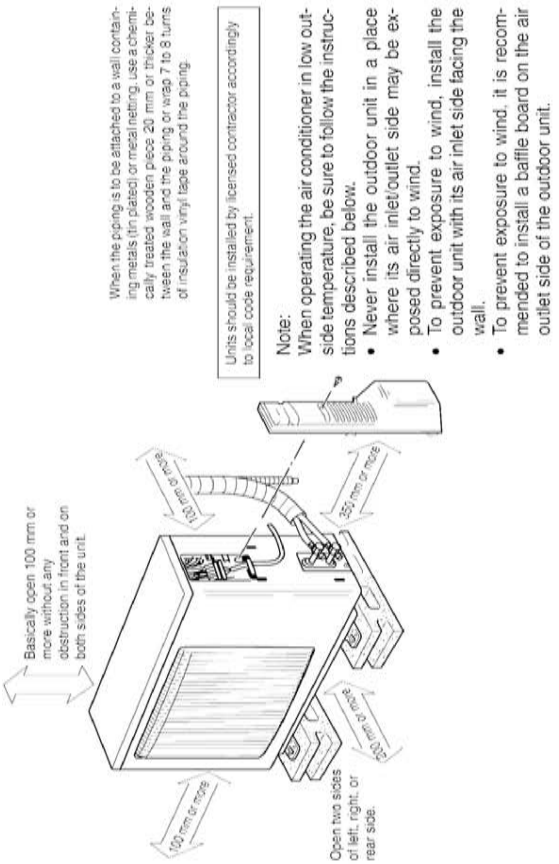

When the piping is to be attached to a wall containing metals (tin plated) or metal netting, use a chemically treated wooden piece 20 mm or thicker between the wall and the piping or wrap 7 to 8 turns of insulation vinyl tape around the piping.

Units should be installed by licensed contractor accordingly to local code requirement.

Note:
When operating the air conditioner in low outside temperature, be sure to follow the instructions described below.

- Never install the outdoor unit in a place where its air inlet/outlet side may be exposed directly to wind.
- To prevent exposure to wind, install the outdoor unit with its air inlet side facing the wall.
- To prevent exposure to wind, it is recommended to install a baffle board on the air outlet side of the outdoor unit.

PARTS TO BE PROVIDED AT YOUR SIDE

	Item	Q'ty
Ⓐ	Refrigerant pipe	1 set
Ⓑ	Indoor/outdoor connecting wire (4-core 1.0 mm²)	1
Ⓒ	Piping tape	1
Ⓓ	Drain pipe (PVC pipe : OD ø26)	1
Ⓔ	Pipe fixing band for refrigerant pipe (The quantity depends on the pipe length.)	2 to 5
Ⓕ	Fixing screw for Ⓔ (The quantity depends on the pipe length.)	2 to 5
Ⓖ	Drain-joint pipe (PVC pipe : OD ø26, L=50 mm)	1
Ⓗ	Power supply cord (3-core 1.0 mm²)	1
Ⓘ	Piping hole repair parts (Putty and Wall hole cover)	1
Ⓙ	Installation plate fixing bolt (M10)	4
Ⓚ	Nut, Spring washer for Ⓙ (M10)	4 set

ACCESSORIES

Check the following parts before installation.

<Indoor unit>

	Item	Q'ty
①	Installation plate	2
②	Unit fixing screw 5 × 12 mm	2
③	Wireless remote controller	1
④	Remote controller holder	1
⑤	Fixing screw for ③ 3.5 × 16 mm (Black)	2
⑥	Battery (AAA) for remote controller	2
⑦	Drain hose	1
⑧	Drain pipe cover	1
⑨	Knockout cover	1
⑩	Screw for ⑨ 4 × 10 mm	2

<Outdoor unit: For YV type only>

⑪	Drain socket	1

OPTIONAL PARTS

Name	Parts No.
Air cleaning filter	MAC-1200FT
Deodorizing filter	MAC-1700DF

REFRIGERANT AND DRAIN PIPE SIZES

Refrigerant pipe	Liquid	OD ø6.35
	Gas	OD ø9.52
Drain pipe		Hard PVC pipe : OD ø26

INSTALLATION DIAGRAM&ACCESSORIES

Remark:
Accessories of this unit are packed inside the unit. Please remove the front grille as shown in the right (See "FRONT GRILL REMOVAL"), and check accessories before installation.

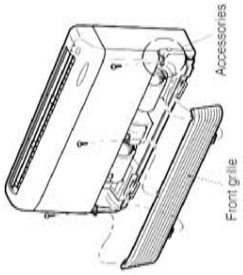

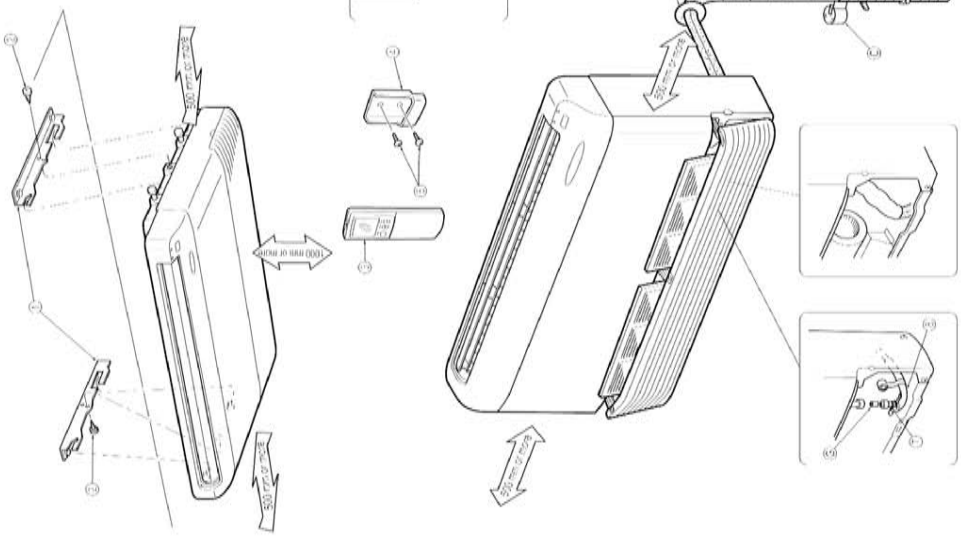

A CASE OF SUSPENDING INDOOR UNIT FROM THE CEILING

(1) MOUNTING INSTALLATION PLATE FIXING BOLTS

1. Determine the locations of installation plate fixing bolts.

- Use installation pattern to determine the locations of installation plate fixing bolts Ⓙ.
  - ⓐ Installation pattern

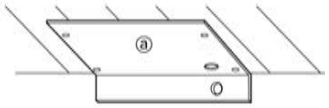

*Remove installation pattern after installatio

Details are printed on pattern.

Attention: Surrounding temperature and humidity conditions may cause paper pattern to shrink or expand. (Measure dimensions before drilling holes.)

2. Suspension structure (Give site of suspension strong structure).

■ Wood structure

- Select tie beam (one-story houses) or second-floor girder (two story houses) as reinforcement member.
- Use sturdy beams of at least 60 mm square for beam pitch of 900 mm or less or of at least 90 mm square for beam pitch of 900-1800 mm.
  - ⓐ Pitch
  - ⓑ Ceiling
  - ⓒ Rafter
  - ⓓ Bracket
  - ⓔ Roof beam

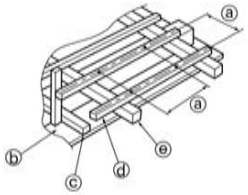

■ Ferroconcrete Structures

- Secure installation plate fixing bolts Ⓙ as shown at the right or use angle-stock bracework to install installation plate fixing bolts Ⓙ.
  - ⓕ Use inserts rated at 100-150 kg each
  - ⓖ Steel reinforcing rod
  - Ⓙ Installation plate fixing bolts

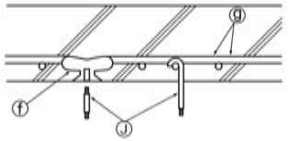

3. Installation plate fixing bolts pitch.

- Use the installation plate fixing bolts Ⓙ M10 (× 4 procure locally).
  - ⓐ Indoor unit
  - ⓑ Air outlet
  - ① Installation plate

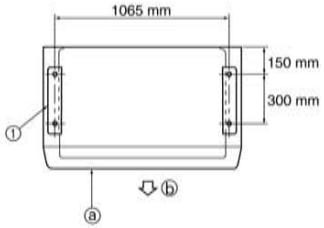

- Projecting dimension of installation fixing bolts Ⓙ from horizontal base line against which you fix installation plate ① as within at the right.
  - ⓒ Horizontal base line
  - ① Installation plate
  - Ⓙ Installation fixing bolts

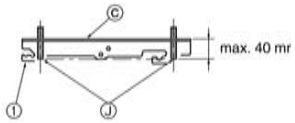

(2) FIXING OF INSTALLATION PLATES

1. Set installation plates to installation plate fixing bolts.

- Set installation plates ① to installation plate fixing bolts Ⓙ so that the distance between insides of installation plates is adjusted to length as shown in the right.
  - ① Installation plate

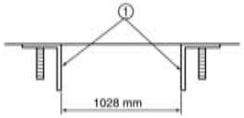

- Installation plates ① should be fixed on one way direction, as shown in Fig. 1.
  Don't fix as shown in Fig. 2.
- Be sure to confirm letters "FRONT" in installation plates ①, set "FRONT" side to air outlet side of indoor unit.
  - ⓐ "FRONT"
  - ① Installation plate

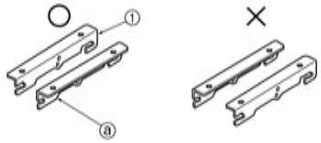

(Fig. 1) (Fig. 2)

2. In case of fixing installation plates ① above the ceiling, put installation plates fixing bolt through a nut, a spring washer, the installation plate, a spring washer, and double nut. (Fig. 3) In case of fixing installation plates ① forward the ceiling directly, also put installation plate fixing bolt through the installation plate, a spring washer, and double nuts. (Fig. 4)

- ⓐ Ceiling
- ① Installation plate
- Ⓙ Installation plate fixing bolt
- Ⓚ-1 Nut (M10)
- Ⓚ-2 Spring washer
- Ⓚ-3 Double nut (M10)

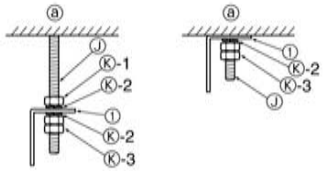

(Fig. 3) (Fig. 4)

3. Check that the four corners are horizontal with level gauge. (Fig. 5)

- ⓐ Level gauge

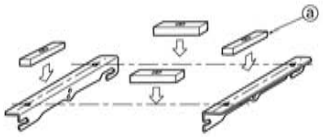

(Fig. 5)

(3) DRILLING HOLE

Determine the locations of holes for refrigerant pipe Ⓐ and drain pipe Ⓑ.

- Use the installation pattern as mentioned in 4-1-(1).
- Be sure to confirm the dimensions as shown in the right.
  - ⓐ Horizontal base line
  - ⓑ Hole for refrigerant pipe
  - ⓒ Hole for drain pipe
  - ① Installation plate

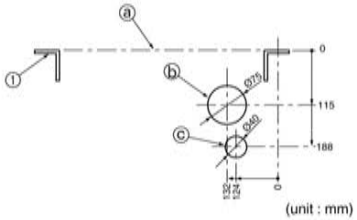

(unit : mm)

- Specially, drill the hole for drain pipe with designate dimension to keep an inclination.
  - ⓓ Horizontal base line
  - ⓔ Hanging bolt
  - ⓕ Wall

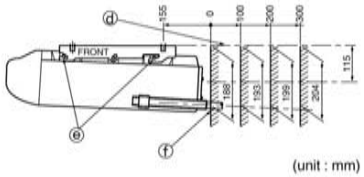

(unit : mm)

A CASE OF INSTALLATING INDOOR UNIT ON THE WALL

(1) MOUNTING INSTALLATION PLATE FIXING BOLTS

1. Determine the locations of installation plate fixing bolts.

- Use installation pattern to determine the locations of installation plate fixing bolts Ⓙ.

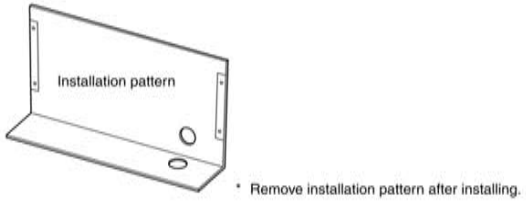

2. Sturdy wall

- Find structural material (such as stud) in the wall.

3. Installation plate fixing bolt pitch.

- See to (1) 3. (Page C-320)

(2) FIXING OF INSTALLATION PLATES

1. Set installation plates ① to installation plate fixing bolts Ⓙ.

- See to (2) 1. (Page C-320)

2. Put installation plate fixing bolt through spring washer (2), and double nuts.

- See to (2) 2 Fig. 4. (Page C-320)

(3) DRILLING HOLE

Determine the location of hole for refrigerant pipes and drain pipe.

- Use the installation pattern as mentioned in (1).
- Be sure to confirm the dimensions as below.

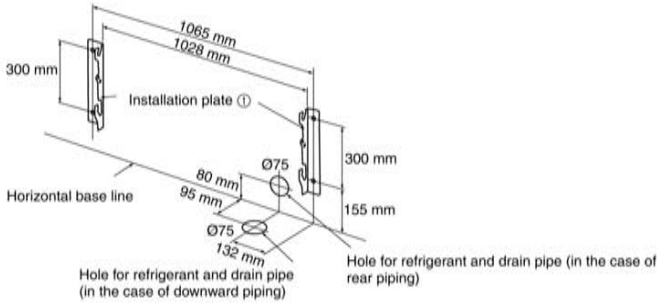

(4) FRONT GRILLE REMOVAL

- See to (4).

(5) OPENING KNOCKOUT HOLE

- See to (5).

(4) FRONT GRILLE REMOVAL

- Remove front grille and transportation support.

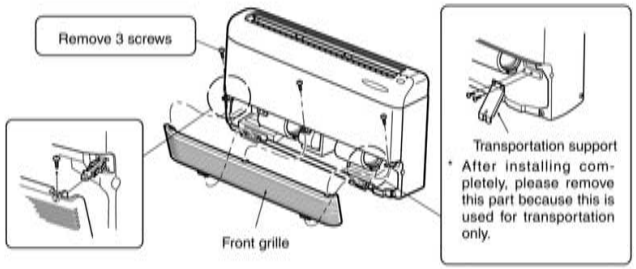

(5) OPENING KNOCKOUT HOLE

- Remove knockout holes with hammering it.

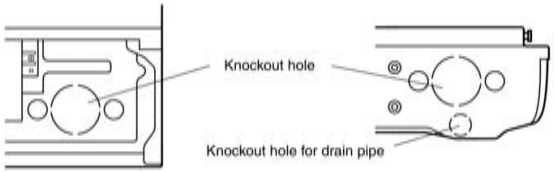

(6) FIXING UNIT TO INSTALLATION PLATES

1. Suspending unit from installation plates.

- Hoist unit so that hanging bolt (4) on the sides of unit fit into holes in installation plates ①.

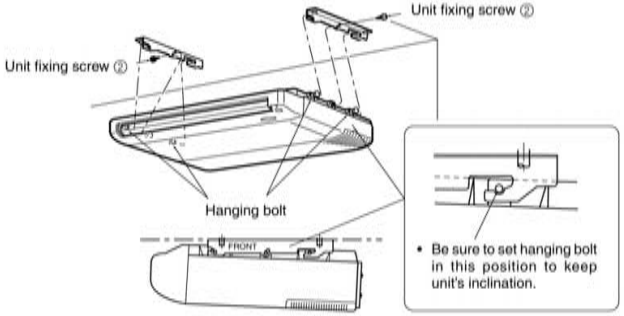

2. Securing unit to installation plates.

- Be sure to tighten unit fixing screw ② to unit securely.

(6) FIXING UNIT TO INSTALLATION PLATES

1. Suspending unit from installation plate.

- Hoist unit so that hanging bolt (4) on the sides of unit fit into holes in installation plate ①.

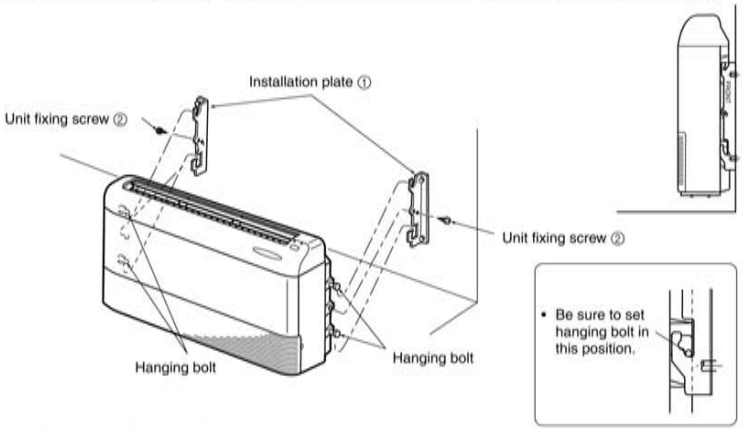

2. Securing unit to installation plates.

- Be sure to tighten unit fixing screw ② to unit securely.

KNOCKOUT COVER

- After removing the knockout holes, attach knockout cover ⑨ on the knockout hold edge (shown as below)

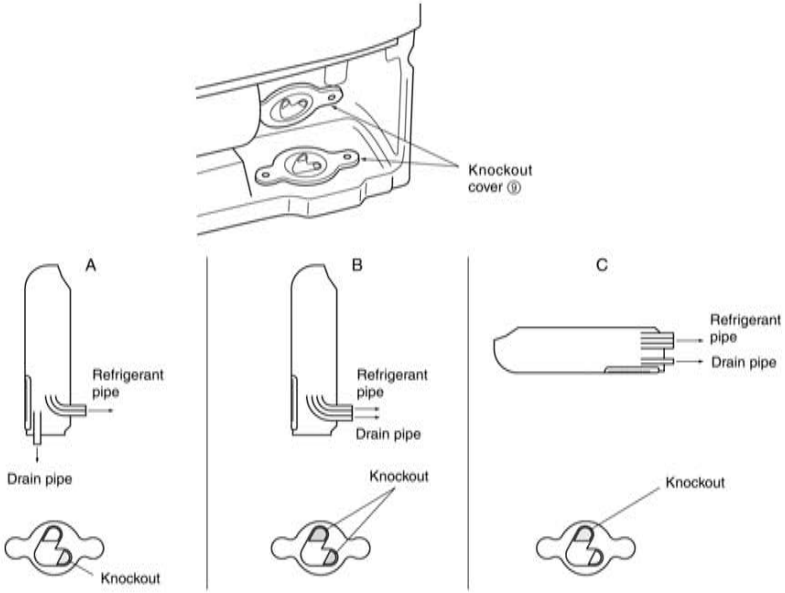

POWER SUPPLY AND CONNECTING WIRE SPECIFICATIONS

Use special room air conditioning circuit.

Rated voltage/Frequency	Breaker capacity	Power supply cord
230 V/50 Hz	10 A	3-core 1.0 mm² in conformity with Design 245 IEC 57

Indoor and Outdoor connecting wire Specification	Cable 4-core 1.0 mm², in conformity with Design 245 IEC 57.

- Peel off both ends of connecting wire and power supply cord as shown in the right.
- Be careful not to contact connecting wire with piping.
- Make earth wire a little longer than the others. (more than 65 mm)

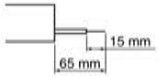

Connect to the plug, or to a power switch which has a gap of 3 mm or more when open to interrupt the source power phase.

⚠ **Warning:**

- **A means for disconnection of the supply with an isolation switch, or similar device, in all active conductors shall be incorporated in the fixed wiring.**
- **Never cut the power cord and connect it to other wires. It may cause a fire.**

INDOOR AND OUTDOOR CONNECTING WIRE CONNECTION

- Wiring connections should be made following the diagram.

1. Remove two screws and pull the terminal cover forward.

2. Be sure to fix the cable by cable clamp.

3. Replace the terminal cover securely.

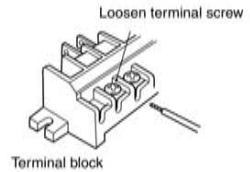

Connection details

① Use care not to make mis-wiring.
② Firmly tighten the terminal screws to prevent them from loosening.
③ After tightening, pull the wires lightly to confirm that they do not move.

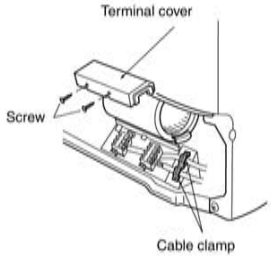

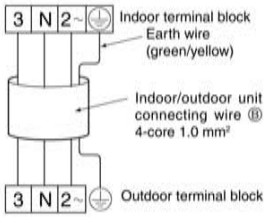

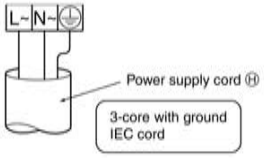

⚠ **Warning:**

- **Attach the electrical part cover securely. If it is attached incorrectly, it could result in a fire, an electric shock due to dust, water, etc.**
- **Use the specified indoor/outdoor unit connecting wire to connect the indoor and outdoor units and fix the wire to the terminal block securely so that no stress is applied to the connecting section of the terminal block. Incomplete connection or fixing of the wire could result in a fire.**
- **When connecting the power supply cord to the power supply source, be sure to connect each wire to the correct pole. Be sure to connect the Live wire side to the L terminal and connect the Neutral conductor side to the N terminal.**

REFRIGERANT PIPE WORK

- Refrigerant pipes which are connected at side of indoor unit must be processed as below, and processed figure will be differently made means of which the indoor unit is installed or which direction refrigerant pipes are connected in.

1. In case that pipes are cut out from back surface of the indoor unit. (Fig. 1)

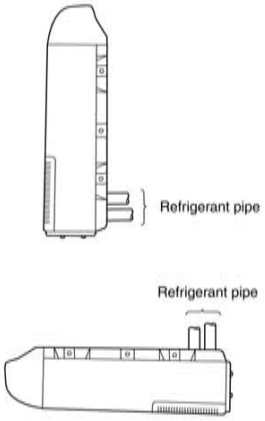

(Fig. 1)

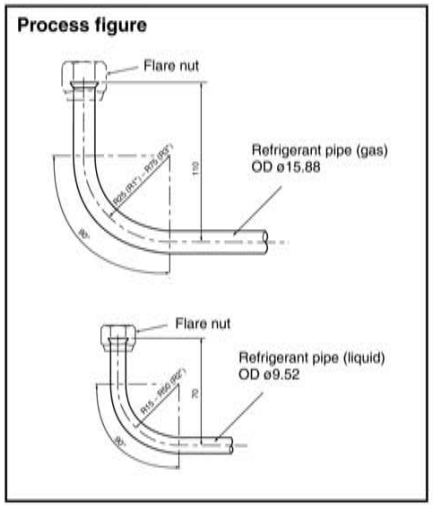

2. In case that pipes jut out from bottom surface of the indoor unit. (Fig. 2)

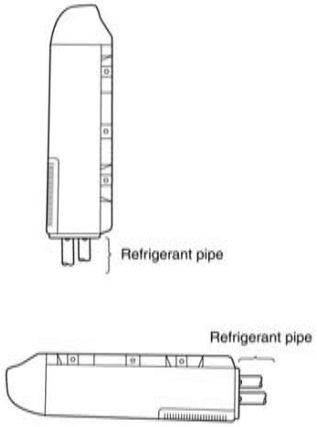

(Fig. 2)

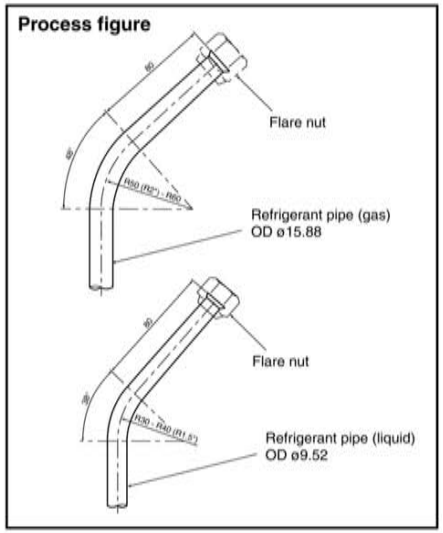

Wall hole sealing and fixing pipe to wall

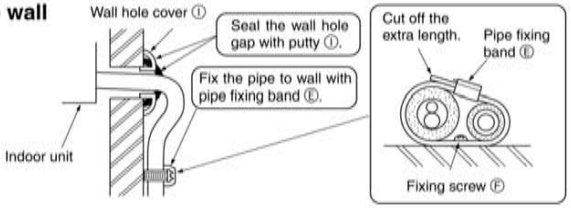

DRAIN PIPE CONNECTION

- Use hard PVC (ø26 mm O.D.) for drain pipe Ⓓ.
- Use drain pipe cover ⓖ which is provided in accessories, wind it around drain pipe Ⓓ in the indoor unit side.
- Use vinyl chloride adhesive for joints prevent leakage.
- When the drain pipe Ⓓ has to go through an indoor space, be sure to cover the drain pipe Ⓓ with insulation readily available in the market.
- For drain pipe connection, use care so as no extra force applies to unit side piping.

1. In case of connecting drain pipe Ⓓ to drain-joint bush directly.

- Be sure to connect drain pipe Ⓓ to drain-joint bush securely as shown in the right.
- Be sure to pass drain pipe Ⓓ with drain pipe cover through knockout hole on bottom surface so as to keep an inclination.

ⓐ Drain-joint bush
ⓑ Knockout
ⓒ PVC adhesive tape
ⓓ Adhesive
ⓖ Drain pipe cover
Ⓓ Drain pipe (VP-20)

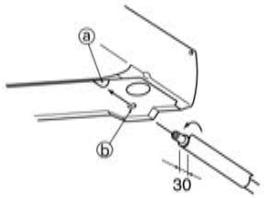

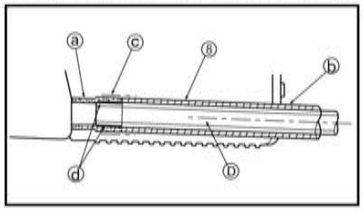

2. In case of connecting drain pipe Ⓓ to drain-joint bush through drain hose.

- Drain hose ⑦ which is contained in accessories is flexible, so use it when drain pipe Ⓓ should be alternated direction.
- Be sure to wind pipe cover which is provided in accessories around drain hose with vinyl tape.
- Cut VP-20 in dimension as shown at the right, and connect drain-joint bush with drain hose with adhesive.

ⓐ Drain-joint bush
ⓑ Tape
ⓒ Adhesive
⑦ Drain hose
⑧ Drain pipe cover
Ⓓ Drain pipe (VP-20)
Ⓖ Drain-joint pipe (VP-20)

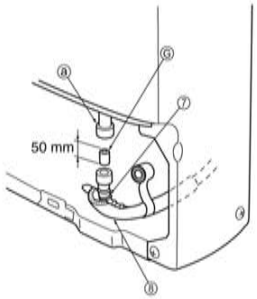

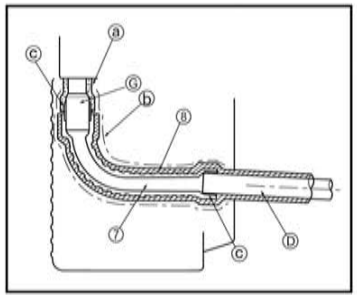

3.

- Be sure that drain pipe Ⓓ tilts downward (1/100 or more) on outdoor side (drain side), and no traps or heaving exist.
- When the drain pipe Ⓓ is relatively long, provide support metal fixtures midway to eliminate waving.
- Odor trap at the end of drain pipe Ⓓ is not required.

ⓐ Insulation
ⓑ Supporting metal fixture
ⓒ Downward inclination of 1/100 or more
ⓓ Air bleeder
ⓔ Do not raise
ⓕ Odor trap
ⓖ The end of drain hose is immersed in water
ⓗ Gap from the ground level is 50 mm or less
ⓘ Sewage ditch

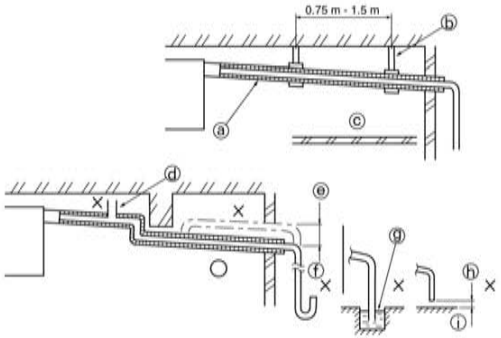

INDOOR/OUTDOOR UNIT CONNECTING WIRE CONNECTION

- Connect the indoor/outdoor unit connecting wire Ⓑ from the indoor unit correctly on the terminal block.
- For future servicing, give extra length to connecting wire.

- Peel off both ends of connecting wire (extension wire).
- Be careful not to contact connecting wire with piping.
- Make earth wire a little longer than the others. (more than 35 mm)

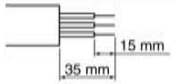

- For the power supply cord and the indoor/outdoor unit connecting wires, be sure to use the ones in compliance with the standards.
- Be sure to push the core until it is hidden and pull each cable to make sure that it is not pulled up incomplete insertion may cause a risk of burning the terminal blocks.

Indoor and Outdoor connecting wire Specification	Cable 4-core 1.0 mm², in conformity with Design 245 IEC 57.

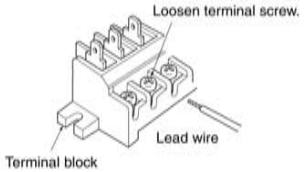

<Connection details>

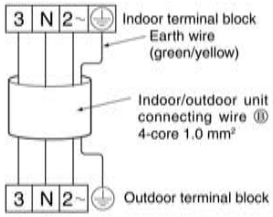

⚠ Caution:

- **Use care not to make mis-wiring.**
- **Firmly tighten the terminal screws to prevent them from loosening.**
- **After tightening, pull the wires lightly to confirm that they do not move.**

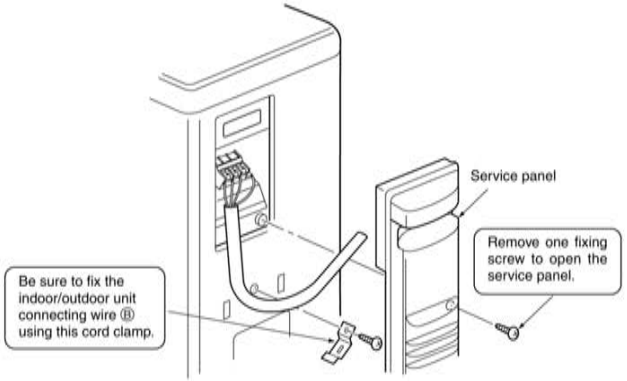

⚠ **Warning:**
Be sure to attach the service panel of the outdoor unit securely. If it is not attached correctly, it could result in a fire or an electric shock due to dust, water, etc.

DRAIN PIPING FOR OUTDOOR UNIT

- Provide drain piping before indoor and outdoor piping connection. (It will be hard to install drain socket ⑪ if indoor and outdoor piping connection is conducted prior to drain piping as outdoor unit becomes immovable.)
- Connect the drain hose ⑦ (obtainable at a store, inside diameter: 15 mm) as shown in the figure for drainage.
- Make sure to provide drain piping with a downhill grade for easy drain flow.

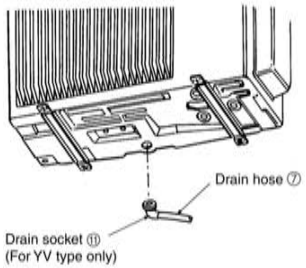

Note:
Do not use the drain socket ⑪ in the cold region. Drain may freeze and it makes the fan stop.

TEST RUN

- Before performing the test run, recheck for any wrong wiring.
  Wrong wiring prevents normal operation or results in blown fuse disabling operation.
- The test run can be initiated by using EMERGENCY OPERATION switch (press button switch). The EMERGENCY OPERATION switch is pressed, the unit will start the test run (continuous operation) for 30 minutes in COOL MODE or HEAT MODE, depending on which mode is selected. During this 30 minutes a thermostat does not work. After 30 minutes the unit will start the EMERGENCY OPERATION at fixed temperature setting of 24°C in COOL MODE or HEAT MODE.
- Perform test run in the following procedure.

PROCEDURE

- Press the EMERGENCY OPERATION switch.
  ① Press it once, and the EMERGENCY COOL MODE starts.

  If the left side lamp of the operation indicator blinks every 0.5 seconds, inspect the in/out connecting wire Ⓑ for mis-wiring.

  ② Press it once more, and the EMERGENCY HEAT MODE starts.
  ③ Press it once more, and the operation stops.
  (The operation mode changes in order of ① - ③ every press of the EMERGENCY OPERATION switch.)

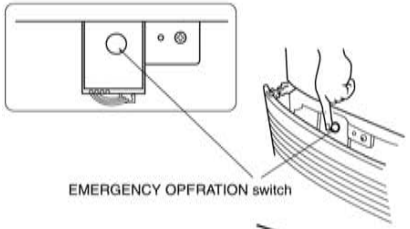

	Mode	Operation indicator lamp	
①	COOL	● (Light)	○ (Off)
②	HEAT	○ (Off)	● (Light)
③	STOP	○ (Lights not turn on)	○

Checking the remote (infrared) signal reception

Press the ON/OFF button on the remote control and check that an electronic sound is heard from the indoor unit. Press the ON/OFF button again to turn the air conditioner off.

If the indoor unit is operated with the remote control, both the trial and emergency operations are released by commands from the remote control.

- Once the compressor stops, the restart preventive device operates so the compressor will not operate for 3 minutes to protect the air conditioner.

AUTO RESTART FUNCTION

- These models are equipped with an auto restart function. If you do not want to use this function, please consult the service representative because the setting of the unit needs to be changed.
- When the indoor unit is controlled with the remote controller, the operation mode, the set temperature, and the fan speed are memorized by the indoor electronic control P.C. board. The auto restart function sets to work the moment the power has restored after power failure, then, the unit will restart automatically. If the unit is operated in "I FEEL..." or "AUTO" mode before power failure, the operation mode (COOL, DRY or HEAT) is not stored in the memory. When the main power is turned on, the unit decides the operation mode by the initial room temperature at restart and starts operation again.

Operation

① If the main power has been cut, the operation settings remain.
② When three minutes have passed after power was restored, the unit will restart automatically according to the memory.

Notes:
- The operation settings are memorized when 10 seconds have passed after the remote controller was operated.
- If the main power is turned off or a power failure occurs while AUTO START/STOP timer is active, the timer setting is cancelled. As these models are equipped with an auto restart function, the air conditioner starts operating with timer cancelled at the same time that power is restored.
- If the unit has been off with the remote controller before power failure, the auto restart function does not work as the power button of the remote controller is off.
- To prevent breaker off due to the rush of starting current, systematize other home appliances not to turn on at the same time.

MCFZ-A18/A24WV
MUZ-A18/A24YV

These explanation are excerpted from the installation manual.

INSTALLATION DIAGRAM&ACCESSORIES

Remark:
Accessories of this unit are packed inside the unit. Please remove the front grille as shown in the right (See "FRONT GRILL REMOVAL"), and check accessories before installation.

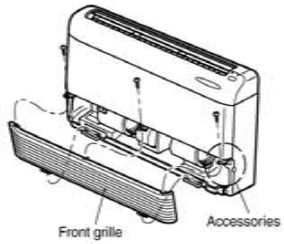

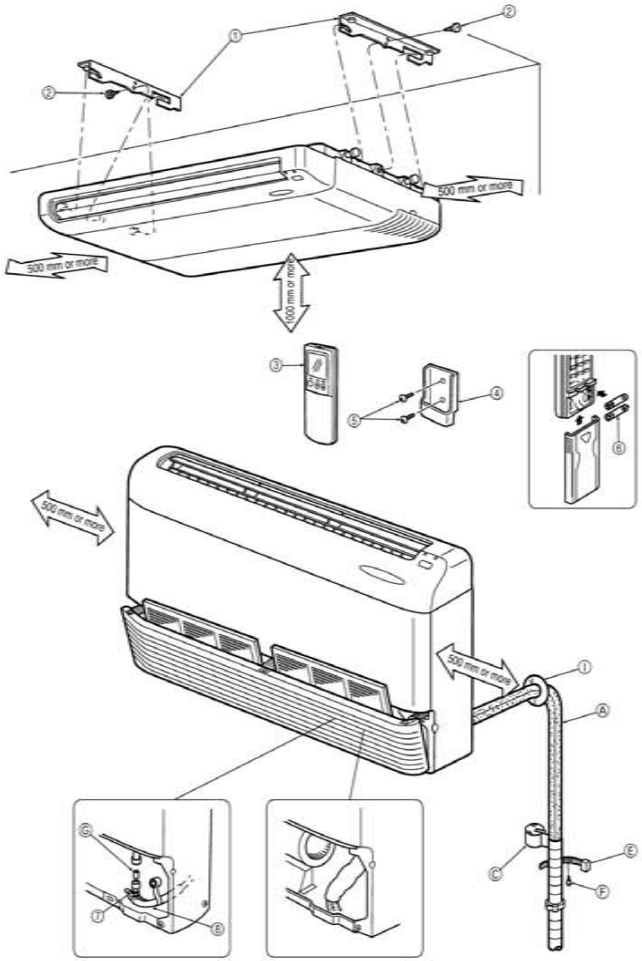

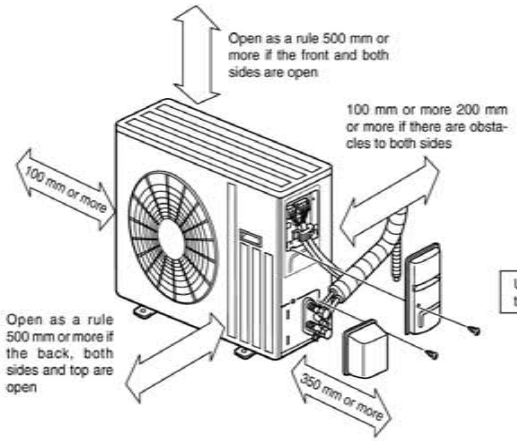

When the piping is to be attached to a wall containing metals (tin plated) or metal netting, use a chemically treated wooden piece 20 mm or thicker between the wall and the piping or wrap 7 to 8 turns of insulation vinyl tape around the piping.

Units should be installed by licensed contractor accordingly to local code requirement.

ACCESSORIES

Check the following parts before installation.
<Indoor unit>

	Item	Q'ty
①	Installation plate	2
②	Unit fixing screw 5 × 12 mm	2
③	Wireless remote controller	1
④	Remote controller holder	1
⑤	Fixing screw for ④ 3.5 × 16 mm (Black)	2
⑥	Battery (AAA) for remote controller	2
⑦	Drain hose	1
⑧	Drain pipe cover	1
⑨	Knockout cover	1
⑩	Screw for ⑧ 4 × 10 mm	2

<Outdoor unit>

⑪	Drain socket	1
⑫	Drain cap	2

PARTS TO BE PROVIDED AT YOUR SIDE

	Item	Q'ty
Ⓐ	Refrigerant pipe	1 set
Ⓑ	Indoor/outdoor connecting wire (2-core 1.0 mm²)	1
Ⓒ	Piping tape	1
Ⓓ	Drain pipe (PVC pipe : OD ø26)	1
Ⓔ	Pipe fixing band for refrigerant pipe (The quantity depends on the pipe length.)	2 to 5
Ⓕ	Fixing screw for Ⓔ (The quantity depends on the pipe length.)	2 to 5
Ⓖ	Drain-joint pipe (PVC pipe : OD ø26, L=50 mm)	1
Ⓗ	Power supply cord	2
Ⓘ	Piping hole repair parts (Putty and Wall hole cover)	1
Ⓙ	Installation plate fixing bolt (M10)	4
Ⓚ	Nut, Spring washer for Ⓙ (M10)	4 set

OPTIONAL PARTS

Name	Parts No.
Air cleaning filter	MAC-1200FT
Deodorizing filter	MAC-1700DF

REFRIGERANT AND DRAIN PIPE SIZES

Refrigerant pipe	Liquid		OD ø6.35
	Gas	A18	OD ø12.7
		A24	OD ø15.88
Drain pipe			Hard PVC pipe : OD ø26

A CASE OF SUSPENDING INDOOR UNIT FROM THE CEILING

(1) MOUNTING INSTALLATION PLATE FIXING BOLTS

1. Determine the locations of installation plate fixing bolts.

- Use installation pattern to determine the locations of installation plate fixing bolts Ⓙ.
  - ⓐ Installation pattern

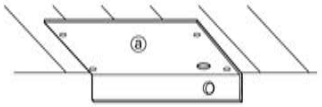

*Remove installation pattern after installation.

Details are printed on pattern.

Attention: Surrounding temperature and humidity conditions may cause paper pattern to shrink or expand. (Measure dimensions before drilling holes.)

2. Suspension structure (Give site of suspension strong structure).

■ Wood structure

- Select tie beam (one-story houses) or second-floor girder (two story houses) as reinforcement member.
- Use sturdy beams of at least 60 mm square for beam pitch of 900 mm or less or of at least 90 mm square for beam pitch of 900-1800 mm.
  - ⓐ Pitch
  - ⓑ Ceiling
  - ⓒ Rafter
  - ⓓ Bracket
  - ⓔ Roof beam

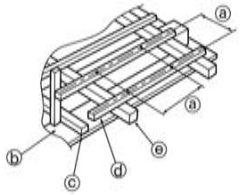

■ Ferroconcrete Structures

- Secure installation plate fixing bolts Ⓙ as shown at the right or use angle-stock bracework to install installation plate fixing bolts Ⓙ.
  - ⓕ Use inserts rated at 100-150 kg each
  - ⓖ Steel reinforcing rod
  - Ⓙ Installation plate fixing bolts

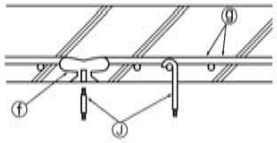

3. Installation plate fixing bolts pitch.

- Use the installation plate fixing bolts Ⓙ M10 (× 4 procure locally).
  - ⓐ Indoor unit
  - ⓑ Air outlet
  - ① Installation plate

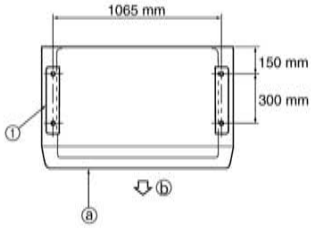

- Projecting dimension of installation fixing bolts Ⓙ from horizontal base line against which you fix installation plate ① as within at the right.
  - ⓒ Horizontal base line
  - ① Installation plate
  - Ⓙ Installation fixing bolts

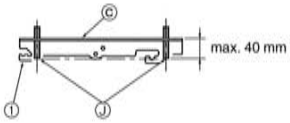

(2) FIXING OF INSTALLATION PLATES

1. Set installation plates to installation plate fixing bolts.

- Set installation plates ① to installation plate fixing bolts Ⓙ so that the distance between insides of installation plates is adjusted to length as shown in the right.
  - ① Installation plate

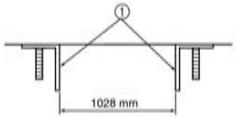

- Installation plates ① should be fixed on one way direction, as shown in Fig. 1.
  Don't fix as shown in Fig. 2.

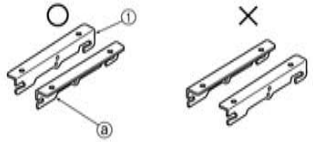

(Fig. 1) (Fig. 2)

- Be sure to confirm letters "FRONT" in installation plates ①, set "FRONT" side to air outlet side of indoor unit.
  - ⓐ "FRONT"
  - ① Installation plate

2. In case of fixing installation plates ① above the ceiling, put installation plates fixing bolt through a nut, a spring washer, the installation plate, a spring washer, and double nut. (Fig. 3) In case of fixing installation plates ① forward the ceiling directly, also put installation plate fixing bolt through the installation plate, a spring washer, and double nuts. (Fig. 4)

- ⓐ Ceiling
- ① Installation plate
- Ⓙ Installation plate fixing bolt
- Ⓚ-1 Nut (M10)
- Ⓚ-2 Spring washer
- Ⓚ-3 Double nut (M10)

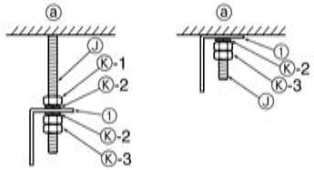

(Fig. 3) (Fig. 4)

3. Check that the four corners are horizontal with level gauge. (Fig. 5)

- ⓐ Level gauge

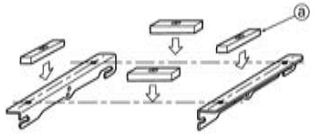

(Fig. 5)

(3) DRILLING HOLE

Determine the locations of holes for refrigerant pipe Ⓐ and drain pipe Ⓓ.

- Use the installation pattern as mentioned in 4-1-(1).
- Be sure to confirm the dimensions as shown in the right.
  - ⓐ Horizontal base line
  - ⓑ Hole for refrigerant pipe
  - ⓒ Hole for drain pipe
  - ① Installation plate

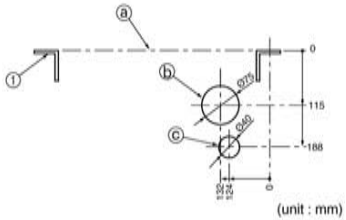

- Specially, drill the hole for drain pipe with designate dimension to keep an inclination.
  - ⓓ Horizontal base line
  - ⓔ Hanging bolt
  - ⓕ Wall

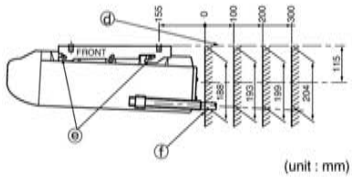

(4) FRONT GRILLE REMOVAL

- Remove front grille and transportation support.

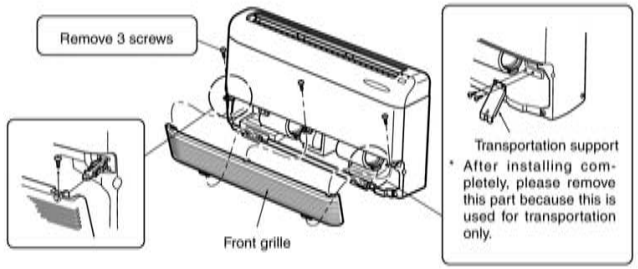

(5) OPENING KNOCKOUT HOLE

- Remove knockout holes with hammering it.

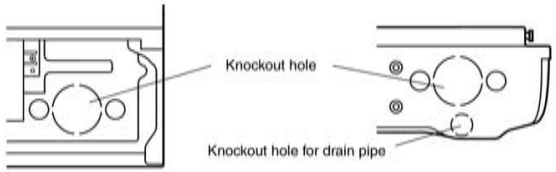

(6) FIXING UNIT TO INSTALLATION PLATES

1. Suspending unit from installation plates.

- Hoist unit so that hanging bolt (4) on the sides of unit fit into holes in installation plates ①.

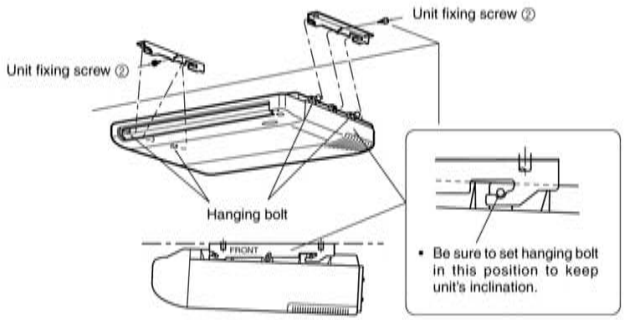

2. Securing unit to installation plates.

- Be sure to tighten unit fixing screw ② to unit securely.

A CASE OF INSTALLATING INDOOR UNIT ON THE WALL

(1) MOUNTING INSTALLATION PLATE FIXING BOLTS

1. Determine the locations of installation plate fixing bolts.

- Use installation pattern to determine the locations of installation plate fixing bolts Ⓙ.

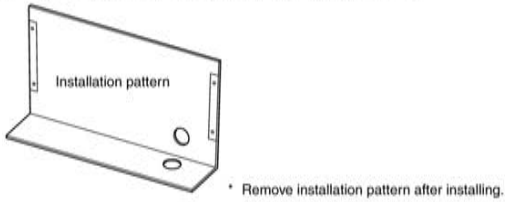

2. Sturdy wall

- Find structural material (such as stud) in the wall.

3. Installation plate fixing bolt pitch.

- See to (1) 3. (Page C-328)

(2) FIXING OF INSTALLATION PLATES

1. Set installation plates ① to installation plate fixing bolts Ⓙ.

- See to (2) 1. (Page C-328)

2. Put installation plate fixing bolt through spring washer (2), and double nuts.

- See to (2) 2 Fig. 4. (Page C-328)

(3) DRILLING HOLE

Determine the location of hole for refrigerant pipes and drain pipe.

- Use the installation pattern as mentioned in 4-2-(1).
- Be sure to confirm the dimensions as below.

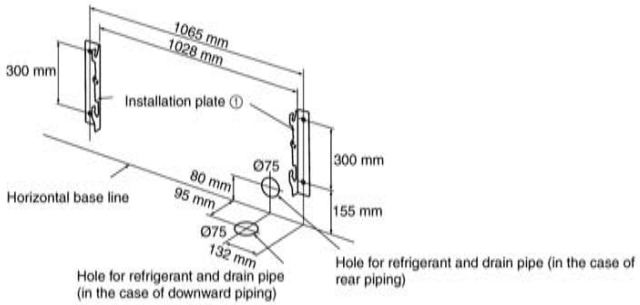

(4) FRONT GRILLE REMOVAL

- See to (4).

(5) OPENING KNOCKOUT HOLE

- See to (5).

(6) FIXING UNIT TO INSTALLATION PLATES

1. Suspending unit from installation plate.

- Hoist unit so that hanging bolt (4) on the sides of unit fit into holes in installation plate ①.

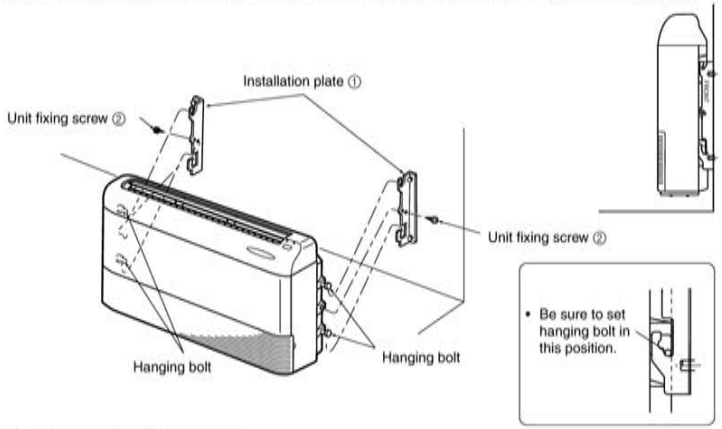

2. Securing unit to installation plates.

- Be sure to tighten unit fixing screw ② to unit securely.

KNOCKOUT COVER

- After removing the knockout holes, attach knockout cover ⑨ on the knockout hold edge (shown as below).

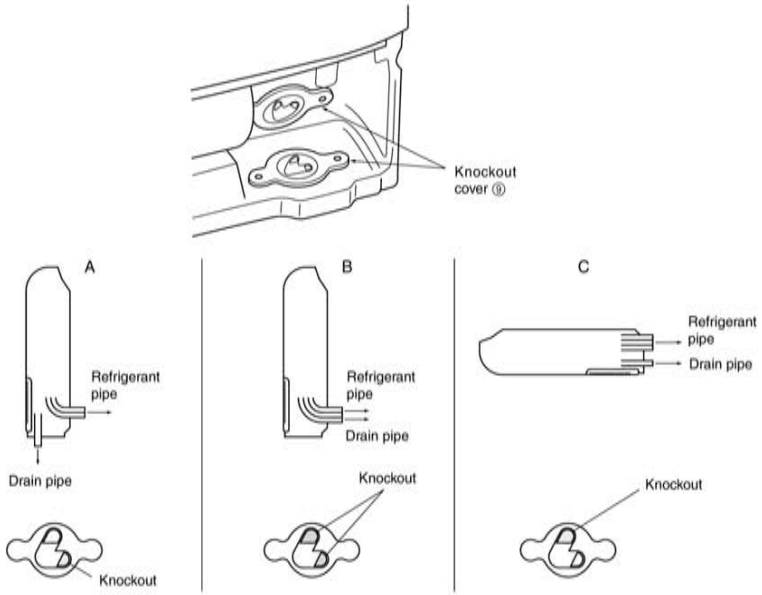

POWER SUPPLY AND CONNECTING WIRE SPECIFICATIONS

Use special room air conditioning circuit.

Rated voltage	Breaker capacity	Power supply cord
230 V	20 A	3-core 1.0 mm² or more, in conformity with Design 245 IEC 57

Indoor and Outdoor connecting wire Specification	Cable 2-core 1.0 mm², in conformity with Design 245 IEC 57.

- Peel off both ends of connecting wire and power supply cord as shown in the right.
- Be careful not to contact connecting wire with piping.
- Make earth wire a little longer than the others. (more than 65 mm)

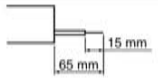

Connect to the plug, or to a power switch which has a gap of 3 mm or more when open to interrupt the source power phase.

⚠ **Warning:**

- **A means for disconnection of the supply with an isolation switch, or similar device, in all active conductors shall be incorporated in the fixed wiring.**
- **Never cut the power cord and connect it to other wires. It may cause a fire.**

INDOOR AND OUTDOOR CONNECTING WIRE CONNECTION

- Wiring connections should be made following the diagram.

1. Remove two screws and pull the terminal cover forward.

2. Be sure to fix the cable by cable clamp.

3. Replace the terminal cover securely.

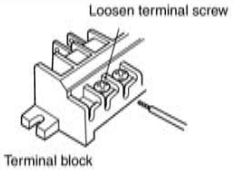

Connection details

① Use care not to make mis-wiring.
② Firmly tighten the terminal screws to prevent them from loosening.
③ After tightening, pull the wires lightly to confirm that they do not move.

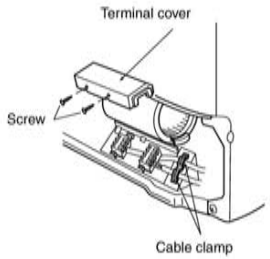

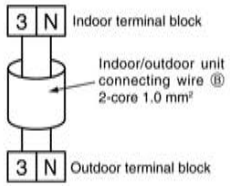

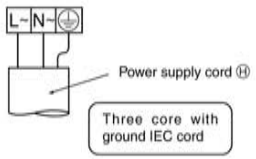

⚠ **Warning:**

- **Attach the electrical part cover securely. If it is attached incorrectly, it could result in a fire, an electric shock due to dust, water, etc.**
- **Use the specified indoor/outdoor unit connecting wire to connect the indoor and outdoor units and fix the wire to the terminal block securely so that no stress is applied to the connecting section of the terminal block. Incomplete connection or fixing of the wire could result in a fire.**
- **When connecting the power supply cord to the power supply source, be sure to connect each wire to the correct pole. Be sure to connect the Live wire side to the L terminal and connect the Neutral conductor side to the N terminal.**

REFRIGERANT PIPE WORK

- Refrigerant pipes which are connected at side of indoor unit must be processed as below, and processed figure will be differently made means of which the indoor unit is installed or which direction refrigerant pipes are connected in.

1. In case that pipes are cut out from back surface of the indoor unit. (Fig. 1)

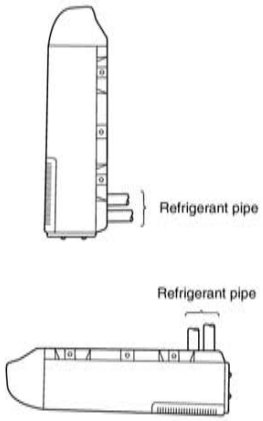

(Fig. 1)

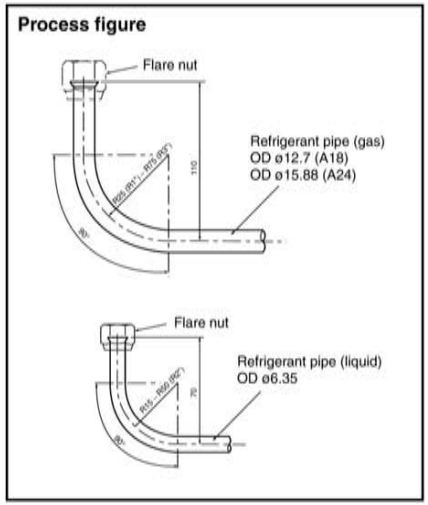

2. In case that pipes jut out from bottom surface of the indoor unit. (Fig. 2)

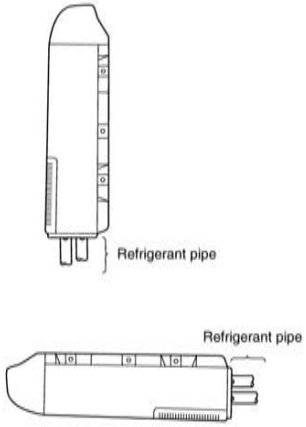

(Fig. 2)

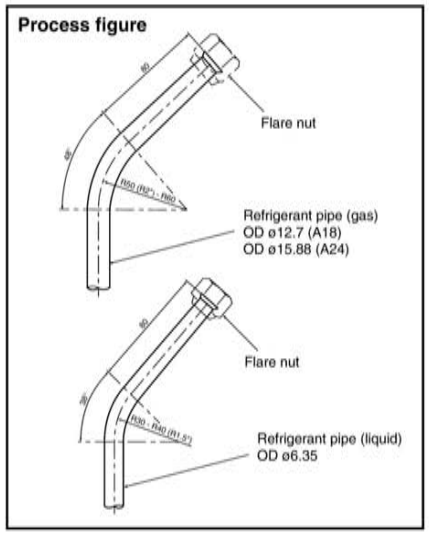

Wall hole sealing and fixing pipe to wall

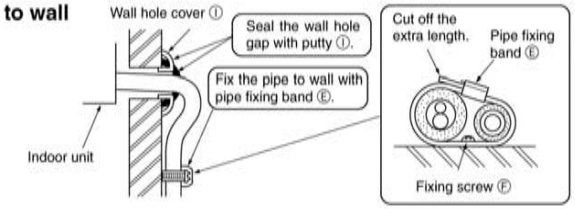

DRAIN PIPE CONNECTION

- Use hard PVC (ø26 mm O.D.) for drain pipe Ⓓ.
- Use drain pipe cover ⓐ which is provided in accessories, wind it around drain pipe Ⓓ in the indoor unit side.
- Use vinyl chloride adhesive for joints prevent leakage.
- When the drain pipe Ⓓ has to go through an indoor space, be sure to cover the drain pipe Ⓓ with insulation readily available in the market.
- For drain pipe connection, use care so as no extra force applies to unit side piping.

1. In case of connecting drain pipe Ⓓ to drain-joint bush directly.

- Be sure to connect drain pipe Ⓓ to drain-joint bush securely as shown in the right.
- Be sure to pass drain pipe Ⓓ with drain pipe cover through knockout hole on bottom surface so as to keep an inclination.

ⓐ Drain-joint bush
ⓑ Knockout
ⓒ PVC adhesive tape
ⓓ Adhesive
ⓔ Drain pipe cover
Ⓓ Drain pipe (VP-20)

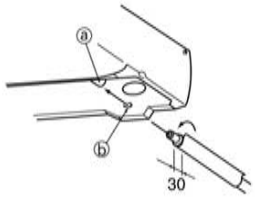

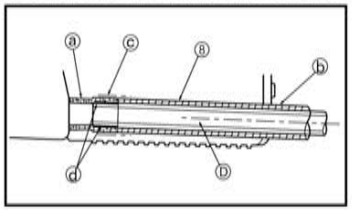

2. In case of connecting drain pipe Ⓓ to drain-joint bush through drain hose.

- Drain hose ⑦ which is contained in accessories is flexible, so use it when drain pipe Ⓓ should be alternated direction.
- Be sure to wind pipe cover which is provided in accessories around drain hose with vinyl tape.
- Cut VP-20 in dimension as shown at the right, and connect drain-joint bush with drain hose with adhesive.

ⓐ Drain-joint bush
ⓑ Tape
ⓒ Adhesive
⑦ Drain hose
⑧ Drain pipe cover
Ⓓ Drain pipe (VP-20)
Ⓖ Drain-joint pipe (VP-20)

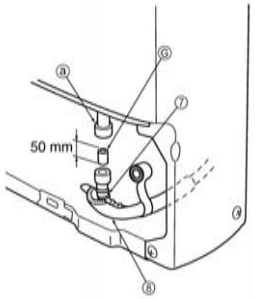

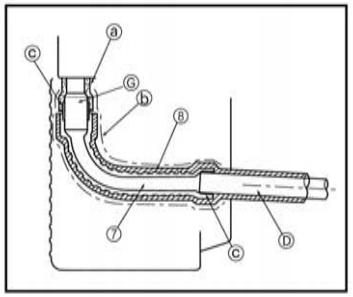

3.

- Be sure that drain pipe Ⓓ tilts downward (1/100 or more) on outdoor side (drain side), and no traps or heaving exist.
- When the drain pipe Ⓓ is relatively long, provide support metal fixtures midway to eliminate waving.
- Odor trap at the end of drain pipe Ⓓ is not required.

ⓐ Insulation
ⓑ Supporting metal fixture
ⓒ Downward inclination of 1/100 or more
ⓓ Air bleeder
ⓔ Do not raise
ⓕ Odor trap
ⓖ The end of drain hose is immersed in water
ⓗ Gap from the ground level is 50 mm or less
ⓘ Sewage ditch

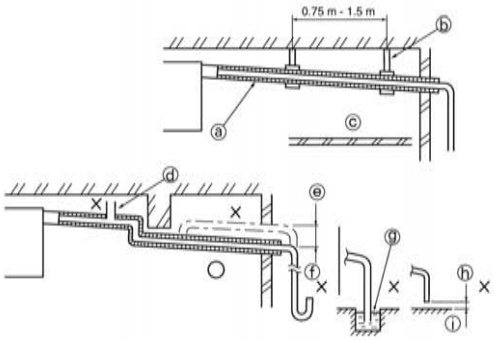

INDOOR/OUTDOOR UNIT CONNECTING WIRE CONNECTION AND OUTDOOR POWER SUPPLY CORD CONNECTION

- Connect the indoor/outdoor unit connecting wire Ⓑ from the indoor unit correctly on the terminal block.
- For future servicing, give extra length to connecting wire.

Rated Voltage	Breaker capacity	
230 V	20 A	Connect to the supply terminals and leave a contact separation of at least 3 mm at each pole to disconnect the source power pole. (When the power switch is shut off, it must disconnect all poles.)

- Peel off both ends of connecting wire (extension wire). When too long, or connected by cutting off the middle, peel off power supply wire to the size as shown in the right.
- Be careful not to contact connecting wire with piping.
- Make earth wire a little longer than the others. (more than 35 mm)

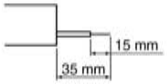

- For the power supply cord and the indoor/outdoor unit connecting wires, be sure to use the ones in compliance with the standards.
- Be sure to push the core until it is hidden and pull each cable to make sure that it is not pulled up incomplete

Power supply cord Specification	3-core 2.5 mm² or more, in conformity with Design 245 IEC 57.	10 m or less
	3-core 4.0 mm² or more, in conformity with Design 245 IEC 57.	15 m or less
	3-core 6.0 mm² or more, in conformity with Design 245 IEC 57.	25 m or less
Indoor and Outdoor connecting wire Specification	Cable 2-core 1.0 mm², in conformity with Design 245 IEC 57.	

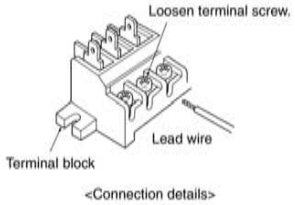

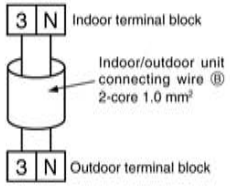

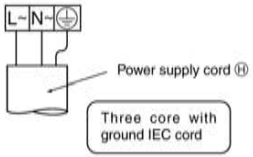

insertion may cause a risk of burning the terminal blocks.

⚠ **Caution:**

- **Use care not to make mis-wiring.**
- **Firmly tighten the terminal screws to prevent them from loosening.**

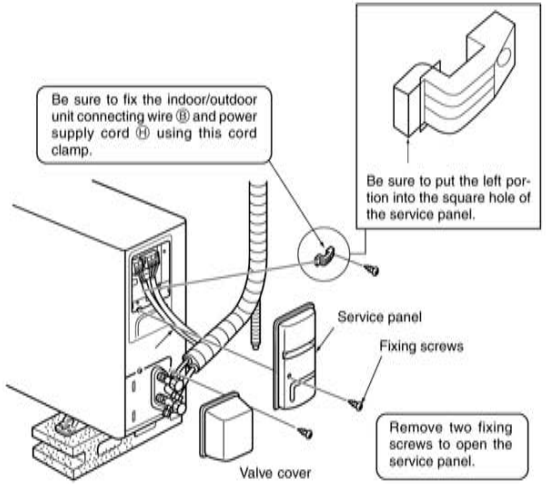

- **After tightening, pull the wires lightly to confirm that they do not move.**

⚠ Warning:
Be sure to attach the service panel of the outdoor unit securely. If it is not attached correctly, it could result in a fire or an electric shock due to dust, water, etc.

TEST RUN

- Before performing the test run, recheck for any wrong wiring.
  Wrong wiring prevents normal operation or results in blown fuse disabling operation.
- The test run can be initiated by using EMERGENCY OPERATION switch (press button switch). The EMERGENCY OPERATION switch is pressed, the unit will start the test run (continuous operation) for 30 minutes in COOL MODE or HEAT MODE, depending on which mode is selected. During this 30 minutes a thermostat does not work. After 30 minutes the unit will start the EMERGENCY OPERATION at fixed temperature setting of 24°C in COOL MODE or HEAT MODE.
- Perform test run in the following procedure.

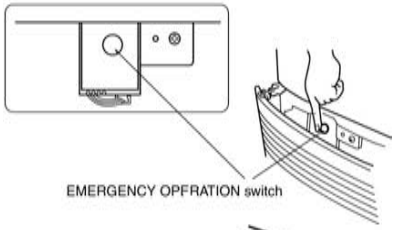

PROCEDURE

- Press the EMERGENCY OPERATION switch.
  ① Press it once, and the EMERGENCY COOL MODE starts.

  > If the left side lamp of the operation indicator blinks every 0.5 seconds, inspect the in/out connecting wire Ⓑ for mis-wiring.

  ② Press it once more, and the EMERGENCY HEAT MODE starts.
  ③ Press it once more, and the operation stops.
  (The operation mode changes in order of ① - ③ every press of the EMERGENCY OPERATION switch.)

	Mode	Operation indicator lamp	
①	COOL	● (Light)	○ (Off)
②	HEAT	○ (Off)	● (Light)
③	STOP	○ (Lights not turn on)	○

Checking the remote (infrared) signal reception

Press the ON/OFF button on the remote control and check that an electronic sound is heard from the indoor unit. Press the ON/OFF button again to turn the air conditioner off.

> If the indoor unit is operated with the remote control, both the trial and emergency operations are released by commands from the remote control.

- Once the compressor stops, the restart preventive device operates so the compressor will not operate for 3 minutes to protect the air conditioner.

AUTO RESTART FUNCTION

When the indoor unit is controlled with the remote controller, the operation mode, set temperature, and the fan speed are memorized by the indoor electronic control P.C. board. The auto restart function sets to work the moment the power has restored after power failure, then, the unit will restart automatically. If the unit is operated in "I FEEL CONTROL" mode before power failure, the operation is not memorized. In "I FEEL CONTROL" mode, the operation is decided by the initial room temperature at (re)start.

Notes:

- The operation settings are memorized when 10 seconds have passed after the remote controller was operated.
- If the main power is turned off or a power failure occurs while AUTO START/STOP timer is active, the timer setting is cancelled. As this model is equipped with the auto restart function, the air conditioner should start operating at the same time that a power has restored.
- If the unit has been off with the remote controller before power failure, the auto restart function does not work as the power button of the remote controller is off.
- To prevent breaker off due to the rush of starting current, systematize other home appliance not to turn on at the same time.

C.2.11 MICROPROCESSOR CONTROL

C.2.11.1 MCF-A·WV Series

MCF-A12WV MU-A12YV
MCF-A18WV MUCF-A18WV
MCF-A24WV MUCF-A24WV

WIRELESS REMOTE CONTROLLER

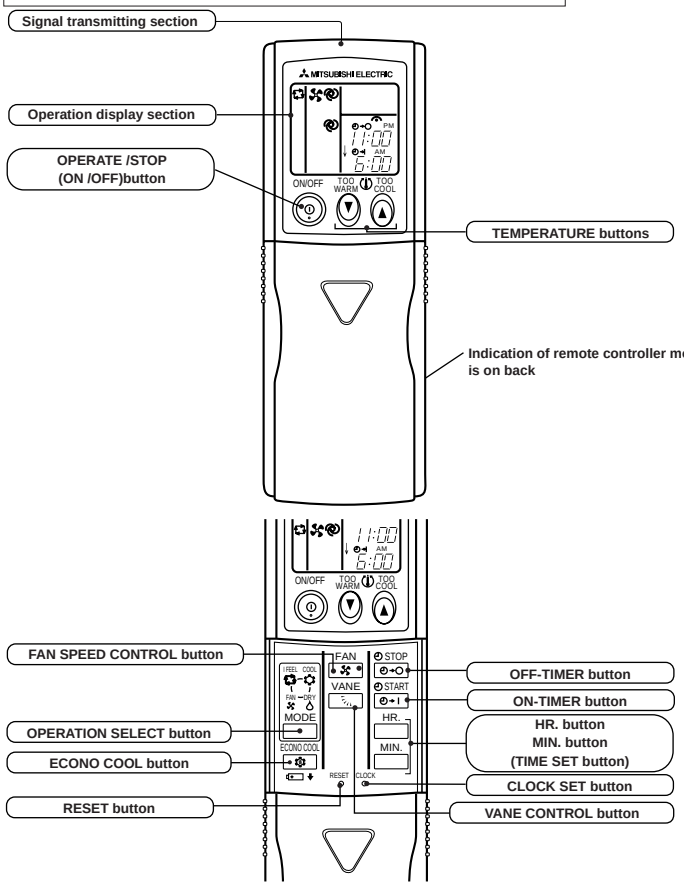

Once the operation mode are set, the same operation mode can be repeated by simply turning the OPERATE/STOP (ON/OFF) button ON.
Indoor unit receives the signal with a beep tone.
When the system turns off, 3-minute time delay will operate to protect system from overload and compressor will not restart for 3 minutes.

a. "I FEEL CONTROL" ( ) OPERATION

(1) Press OPERATE/STOP (ON/OFF) button on the remote controller. OPERATION INDICATOR lamp of the indoor unit will turn on with a beep tone.
(2) Select "I FEEL CONTROL"( )mode with the OPERATION SELECT button.
(3) The operation mode is determined by the room temperature at start-up of the operation.

Initial room temperature	mode
25°C or more	COOL mode of "I FEEL CONTROL"
more than 13°C, less than 25°C	DRY mode of "I FEEL CONTROL"

- Once the mode is fixed, the mode will not change by room temperature afterwards.
- Under the ON-TIMER ( )timer operation, the mode is determined according to the room temperature when the operation starts.
- When the system is stopped with the OPERATE/ STOP (ON/OFF) button on the remote controller, and restarted within 2 hours in "I FEEL CONTROL" ( ) mode, the system operates in previous mode automatically regardless of the room temperature.

INDOOR UNIT DISPLAY SECTION

Operation Indicator lamp

The operation indicator at the right side of the indoor unit indicates the operation state.

- The following indication applies regardless of shape of the indicator.

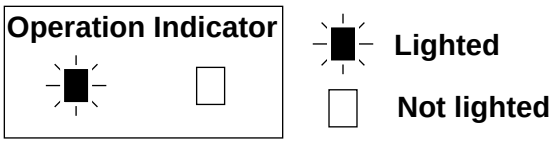

Indication	Operation state	Difference between target temperature and room temperature
	This shows that the air conditioner is operating to reach the target temperature. Please wait until the target temperature is obtained.	Approx. 2 ℃ or more
	This shows that the room temperature is approaching the target temperature.	Approx. 2 ℃ or less

Example

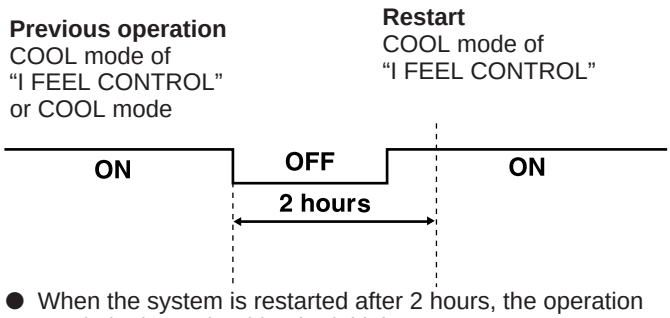

- When the system is restarted after 2 hours, the operation mode is determined by the initial room temperature at start-up of the operation.

Example

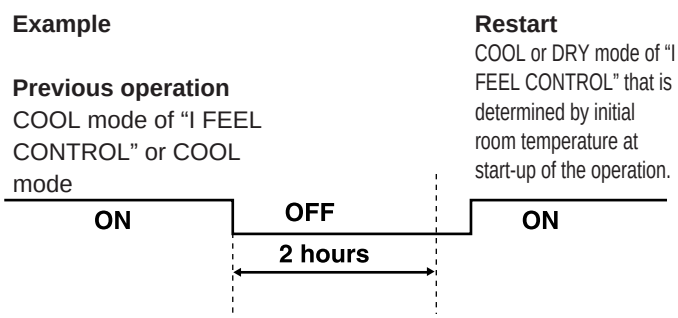

(4) The initial set temperature is decided by the initial room temperature.

Model	Initial room temperature	Initial set temperature	
COOL mode of "I FEEL CONTROL"	26°C or more	24°C	※
	25°C to 26°C	Initial room temperature minus 2°C	
DRY mode of "I FEEL CONTROL"	13°C to 25°C	Initial room temperature minus 2°C	

※ When the system is restarted with the remote controller, the system operates with the previous set temperature regardless of the room temperature at restart.
The set temperature is calculated by the previous set temperature.

(5) TEMPERATURE buttons
In "I FEEL CONTROL"( ) mode, set temperature is decided by the microprocessor based on the room temperature.
In addition, set temperature is controlled by TOO WARM or TOO COOL buttons when you feel too warm or too cool. Each time the TOO WARM or TOO COOL button is pressed, the indoor unit receives the signal and emits a beep tone.

● **Fuzzy control**
When the TOO COOL or TOO WARM button is pressed, the microprocessor changes the set temperature, considering the room temperature, the frequency of pressing TOO COOL or TOO WARM button and the user's preference to heat or cold. So this is called "Fuzzy control", and works only in "I FEEL CONTROL" mode.
In DRY mode of "I FEEL CONTROL", the set temperature doesn't change.

TOO COOL ▲ ··· To raise the set temperature 1~2 degrees(°C)

TOO WARM ▼ ··· To lower the set temperature 1~2 degrees(°C)

a.1. COOL mode of "I FEEL CONTROL"

1. Thermostat control
Thermostat is ON or OFF by difference between room temperature and set temperature.

Initial temperature difference	Thermostat
Room temperature minus set temperature : 0.3 ℃ or more	ON
Room temperature minus set temperature : less than -0.3 ℃	OFF

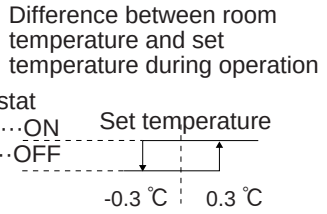

2. Indoor fan speed control
Indoor fan operates continuously at the set speed by FAN SPEED CONTROL button regardless of the thermostat's OFF-ON.
In AUTO the fan speed is as follows.

Initial temperature difference	Fan speed
Room temperature minus set temperature : 1.7 degrees or more	High
Room temperature minus set temperature : Between 1 and 1.7 degrees	Med.
Room temperature minus set temperature : less than 1 degree	Low

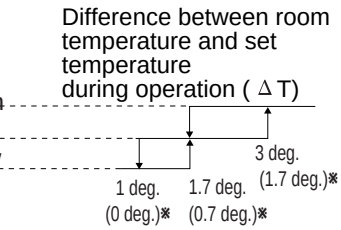

※In case that Δ T has been any following condition for 30 minutes, the value in the parentheses is applied.
a. Fan speed is Auto Low, and Δ T is 1 degree or more.
b. Fan speed is Auto Med., and Δ T is 1.7 degrees or more.

3. Coil frost prevention
① Temperature control
When the indoor coil thermistor RT12 reads 1℃ (MCF-A12WV)/ -1℃ (MCF-A18/A24WV) or below, the coil frost prevention mode starts immediately. However the coil frost prevention doesn't work for 5 minutes since the compressor has started.
The indoor fan operates at the set speed the compressor stops for 5 minutes.
After that, if RT12 still reads below 1℃ (MCF-A12WV)/ -1℃ (MCF-A18/A24WV) this mode is prolonged until the RT12 reads over 1℃ (MCF-A12WV)/ -1℃ (MCF-A18/A24WV).

② Time control
When the three conditions as follows have been satisfied for 1 hour and 45 minutes, compressor stops for 3 minutes. The indoor fan operates at set speed.
a. Compressor has been continuously operating.
b. Indoor fan speed is Low or Med.
c. Room temperature is below 26℃.
When compressor stops, the accumulated time is cancelled and when compressor restarts, time counting starts from the beginning.
Time counting also stops temporarily when the indoor fan speed becomes High or the room temperature exceeds 26℃. However, when two of the above conditions (b.and c.) are satisfied again. Time accumulation is resumed.

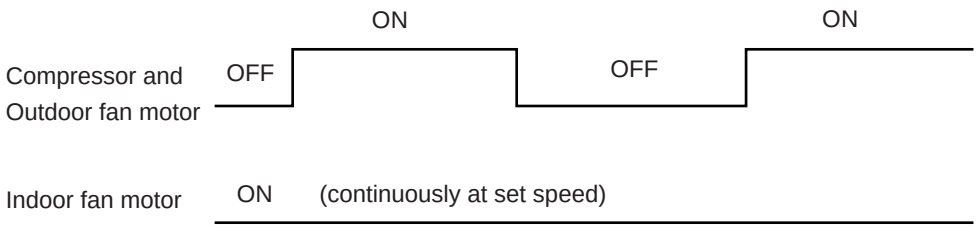

a.2. DRY mode of "I FEEL CONTROL"

The system for dry operation uses the same refrigerant circuit as the cooling circuit.
The compressor and the indoor fan are controlled by the temperature.
By such controls, indoor flow amounts will be reduced in order to lower humidity without much room temperature decrease.

1. Thermostat control

Thermostat is ON or OFF by difference between room temperature and set temperature.

Difference between room temperature and set temperature during operation

Initial temperature difference	Thermostat
Room temperature minus set temperature : 0.3 ℃ or more	ON
Room temperature minus set temperature : less than -0.3 ℃	OFF

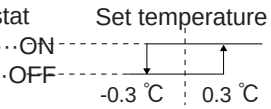

2. Indoor fan speed control

Indoor fan operates at the set speed by FAN SPEED CONTROL button.
However, in AUTO fan operation, fan speed becomes Low.

3. The operation of the compressor and indoor/ outdoor fan

Compressor operates by room temperature control and time control.
Set temperature is controlled to fall 2℃ as initial set temperature.
Indoor fan and outdoor fan operate in the same cycle as the compressor.

- When the room temperature is 23℃ or over:
  When the thermostat is ON, the compressor repeats 8 minutes ON and 3 minutes OFF.
  When the thermostat is OFF, the compressor repeats 4 minutes OFF and 1 minute ON.
- When the room temperature is under 23℃.
  When the thermostat is ON, the compressor repeats 2 minutes ON and 3 minutes OFF.
  When the thermostat is OFF, the compressor repeats 4 minutes OFF and 1 minute ON.

Operation time chart Example

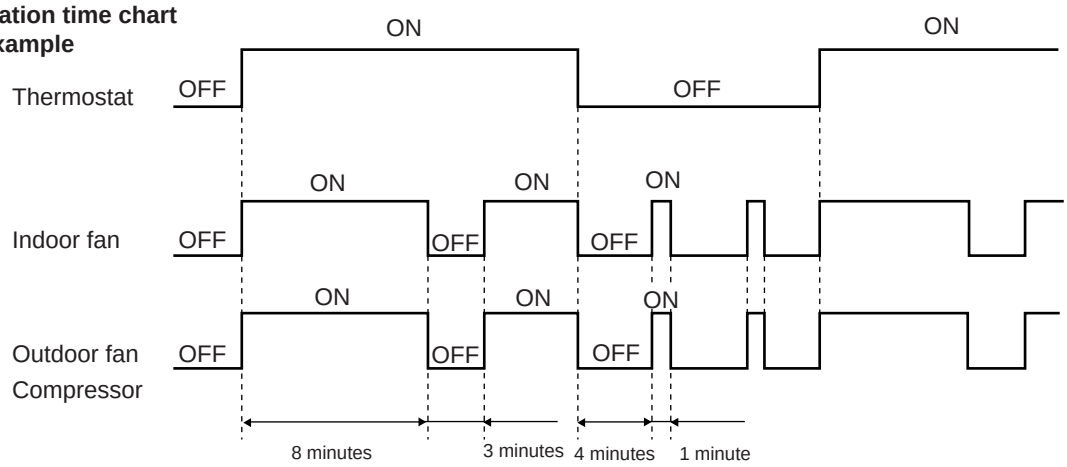

4. Coil frost prevention

- The operation is as same as coil frost prevention during COOL mode of "I FEEL CONTROL".
- Indoor fan operates at the set speed and the compressor stops for 5 minutes, because protection (Coil frost prevention) has the priority.
  However, when coil frost prevention works while the compressor is not operating, it's speed becomes Low.

b. COOL (✿) OPERATION

(1) Press OPERATE/STOP (ON/OFF) button.
OPERATION INDICATOR lamp of the indoor unit turns on with a beep tone.

(2) Select COOL mode with the OPERATION SELECT button.

(3) Press the TEMPERATURE buttons.
(TOO WARM or TOO COOL button)
The setting range is 16 ~ 31°C.
※ Indoor fan continues to operate regardless of thermostat's OFF-ON.
※ Coil frost prevention is as same as COOL mode of "I FEEL CONTROL".

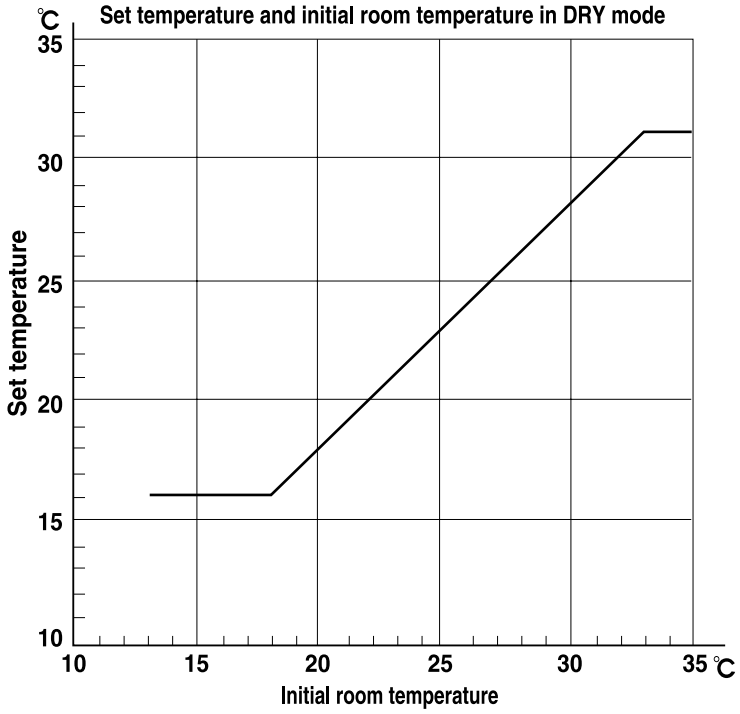

c. DRY (△) OPERATION

(1) Press OPERATE/STOP (ON/OFF) button.
OPERATION INDICATOR lamp of the indoor unit turns on with a beep tone.

(2) Select DRY mode with the OPERATION SELECT button.

(3) The microprocessor reads the room temperature and determines the set temperature. Set temperature is as shown in the right chart.
Thermostat (SET TEMP.)does not work.
The other operations are same as DRY mode of "I FEEL CONTROL".

(4) DRY operation will not work when the room temperature is 13°C or below.

d. FAN (✣) OPERATION

(1) Press the OPERATE/STOP (ON/OFF) button.

(2) Select FAN mode with the OPERATION SELECT button.

(3) Select the desired fan speed. When AUTO,it becomes Low.
Only indoor fan operates.
Outdoor unit does not operate.

e. AUTO VANE OPERATION

(1) Vane motor drive
This series is equipped with a stepping motor for the vane. The rotating direction, speed, and angle of the motor are controlled by pulse signals (approximate 12V, transmitted from indoor microprocessor.)

(2) Each time the VANE CONTROL button is pressed, angle of horizontal vane is changed in sequence, from 1, 2, 3, 4, 5, SWING to AUTO.

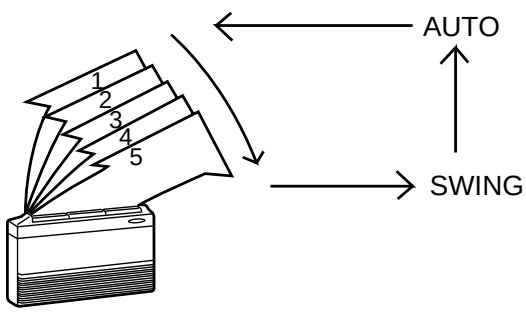

(3) Positioning
The vane is once pressed to the vane stopper to confirm the standard position and then moves to the set angle.
Confirming of standard position is performed in case of follows.
(a) When the power supply turns ON.
(b) When the operation starts or finishes (including timer operation).
(c) When the test run starts.
(d) When the vane control is changed AUTO to MANUAL (except SWING).
(e) When the SWING is finished (including ECONO COOL).

(4) VANE AUTO (@) mode

In VANE AUTO mode, the microprocessor automatically determines the vane angle and operation to make the optimum room-temperature distribution.

1. In COOL and DRY operation

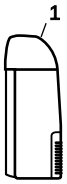

Vane angle is fixed to Angle 1.

2. In FAN operation

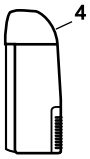

Vane angle is fixed to Angle 4.

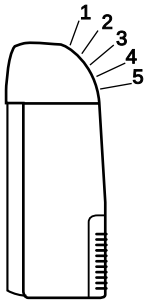

(5) STOP and ON-TIMER standby

When the following cases occur, the vane returns to the closed position.

(a) When the operation is stopped by the remote controller.
(b) When the operation is stopped by the emergency operation.
(c) When the ON-timer is on standby.

(6) Dew prevention

During COOL or DRY operation at position 4 or 5 when the compressor cumulative operation time exceeds 1 hour, the angle of horizontal vane automatically changes to position 1 for dew prevention.

(7) SWING MODE( )

By selecting SWING mode with the VANE CONTROL button, the horizontal vane swings vertically. The remote controller displays " ".SWING mode is cancelled when the VANE CONTROL button is pressed once again.

(8) ECONO COOL ( ) operation (ECONOmical operation)

When the ECONO COOL button is pressed in COOL mode, set temperature is automatically set 2°C higher than that in COOL mode.
Also the horizontal vane swings in various cycle according to the temperature of indoor heat exchanger(RT12).
SWING operation makes you feel cooler than set temperature. So, even though the set temperature is higher than that in COOL mode, the air conditioner can keep comfort. As a result, energy can be saved.
ECONO COOL operation is cancelled when the ECONO COOL button is pressed once again or VANE CONTROL button is pressed or change to other operation mode.

NOTE : ECONO COOL operation does not work in COOL mode of "I FEEL CONTROL".

SWING operation
In swing operation of ECONO COOL operation mode, the initial air flow direction is adjusted to "Horizontal".
According to the temperature of indoor coil thermistor RT12 at starting of this operation, next downward blow time is decided. Then when the downward blow has been finished, next horizontal blow time is decided.
For initial 10 minutes the swing operation is performed in table G~H for quick cooling.
Also, after 10 minutes when the difference of set temperature and room temperature is more than 2 °C, the swing operation is performed in table D~H for more cooling.
The air conditioner repeats the swing operation in various cycle as follows.

	Temperature of indoor coil thermistor RT12	Downward blow time (second)	Horizontal blow time (second)
A	15°C or less	2	23
B	15°C to 17°C	5	20
C	17°C to 18°C	8	17
D	18°C to 20°C	11	14
E	20°C to 21°C	14	11
F	21°C to 22°C	17	8
G	22°C to 24°C	20	5
H	more than 24°C	23	2

f. TIMER OPERATION

1. How to set the timer

(1) Press OPERATE/STOP(ON/OFF) button to start the air conditioner.
(2) Check that the current time is set correctly.
NOTE : Timer operation will not work without setting the current time. Initially “AM0:00” blinks at the current time display of TIME MONITOR, so set the current time correctly with CLOCK SET button.
(3) Press ON/OFF TIMER buttons to select the operation.
“ON-TIMER” button ... AUTO START operation (ON timer)
“OFF-TIMER” button ... AUTO STOP operation (OFF timer)
(4) Press HR. and MIN. button to set the timer. Time setting is 10-minute units.
HR. and MIN. button will work when “ ◴→| ” or “ ◴→○ ” mark is flashing.
These marks disappear in 1 minute.
After setting the ON timer, check that OPERATION INDICATOR lamp of the indoor unit lights.
NOTE1 : Be sure to place the remote controller at the position where its signal can reach the air conditioner even during TIMER operation, or the set time may deviate within the range of about 10 minutes.
NOTE2 : Reset the timer in the following cases, or the set time may deviate and other malfunctions may occur.
- A power failure occurs.
- The circuit breaker functions.

2. Cancel

TIMER setting can be cancelled with the ON/OFF TIMER buttons. (“ ◴→| ” or “ ◴→○ ”)
To cancel the ON timer, press the “ON-TIMER” button.
To cancel the OFF timer, press the “OFF-TIMER” button.
TIMER is cancelled and the display of set time disappears.

PROGRAM TIMER

- The OFF timer and ON timer can be used in combination.
- “ ↓ ” and “ ↑” display show the order of the OFF timer and ON timer operation.

(Example 1) The current timer is 8:00 PM.
The unit turns off at 11:00 PM, and on at 6:00 AM.

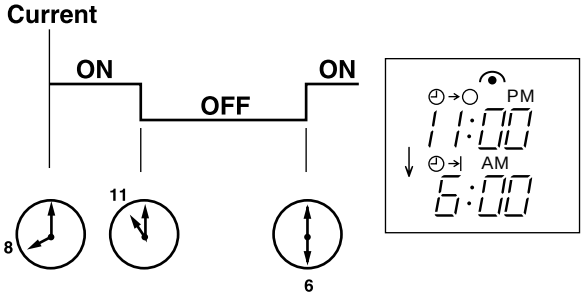

(Example 2) The current time is 11:00 AM.
The unit turns on at 5:00 PM, and off at 9:00 PM.

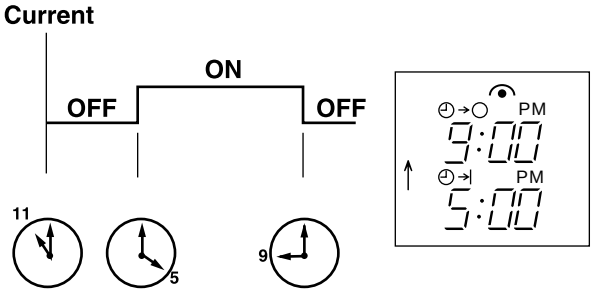

NOTE : TIMER setting will be cancelled by power failure or breaker functioning.

g. EMERGENCY / TEST OPERATION

In case of test run operation or emergency operation, use the EMERGENCY OPERATION switch on the front of the indoor unit. Emergency operation is available when the remote controller is missing, has failed or the batteries of remote controller run down. The unit will start and the OPERATION INDICATOR lamp will light.
The first 30 minutes of operation is the test run operation. This operation is for servicing. The indoor fan speed runs at High speed and the system is in continuous operation. (The thermostat is ON.)
After 30 minutes of test run operation the system shifts to EMERGENCY COOL MODE with a set temperature of 24°C. The fan speed shifts to Med. speed.
The coil frost prevention works even in emergency operation.
In the test run or emergency operation, the horizontal vane operates in VANE AUTO (⊛) mode.
Emergency operation continues until the EMERGENCY OPERATION switch is pressed again or the unit receives any signal from the remote controller. In case of latter normal operation will start.

NOTE : Do not press the EMERGENCY OPERATION switch during normal operation.

EMERGENCY OPERATION switch

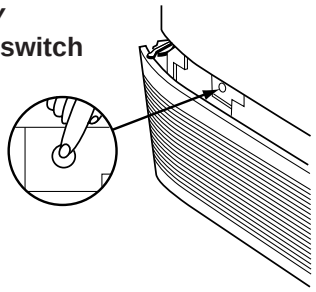

- The following indication applies regardless of shape of the indicator.

OPERATION INDICATOR lamp

Press once	<Cool>	■ □
Press again	<Stop>	□ □

C.2.11.2 MCFH-A·WV Series

MCFH-A12WV MUH-A12YV
MCFH-A18WV MUCFH-A18WV
MCFH-A24WV MUCFH-A24WV

WIRELESS REMOTE CONTROLLER

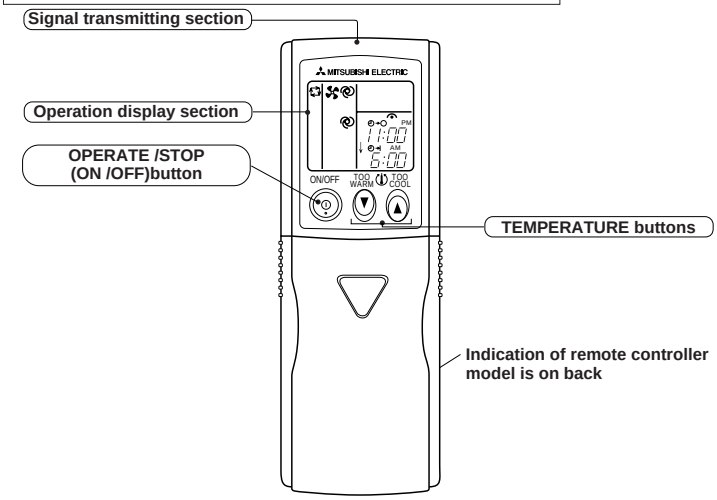

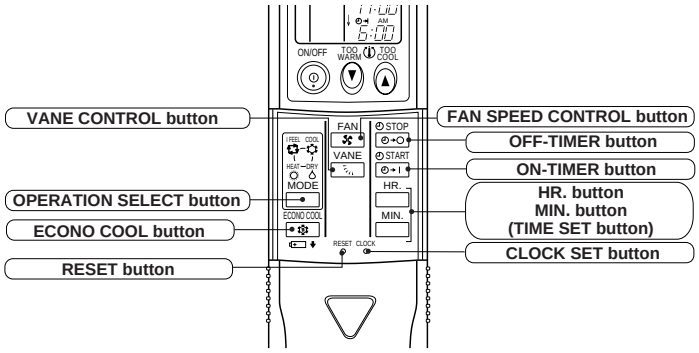

INDOOR UNIT DISPLAY SECTION

Operation Indicator lamp

The operation indicator at the right side of the indoor unit indicates the operation state.

• The following indication applies regardless of shape of the indicator.

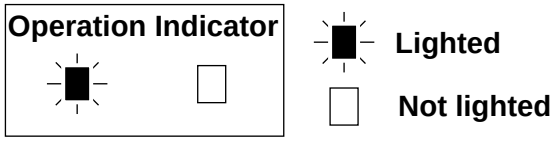

Indication	Operation state	Difference between target temperature and room temperature
	This shows that the air conditioner is operating to reach the target temperature. Please wait until the target temperature is obtained.	Approx. 2 ℃ or more
	This shows that the room temperature is approaching the target temperature.	Approx. 2 ℃ or less

Once the operation mode are set, the same operation mode can be repeated by simply turning the OPERATE/STOP (ON/OFF) button ON.
Indoor unit receives the signal with a beep tone.
When the system turns off, 3-minute time delay will operate to protect system from overload and compressor will not restart for 3 minutes.

a. "I FEEL CONTROL" ( ) OPERATION

(1) Press OPERATE/STOP(ON/OFF) button on the remote controller. OPERATION INDICATOR lamp of the indoor unit turns on with a beep tone.
(2) Select "I FEEL CONTROL" **( )** mode with the OPERATION SELECT button.
(3) The operation mode is determined by the room temperature at start-up of the operation.

Initial room temperature	Mode
25℃ or more	COOL mode of "I FEEL CONTROL"
23℃ to 25℃	DRY mode of "I FEEL CONTROL"
less than 23℃	HEAT mode of "I FEEL CONTROL"

- Once the mode is fixed, the mode does not change by room temperature afterwards.
- Under the ON-TIMER ( ) operation, mode is determined according to the room temperature at set time the operation starts.
- When the system is stopped with the OPERATE/ STOP(ON/OFF) button on the remote controller, and restarted within 2 hours in "I FEEL CONTROL" **( )** mode, the system operates in previous mode automatically regardless of the room temperature.

Operation time chart Example

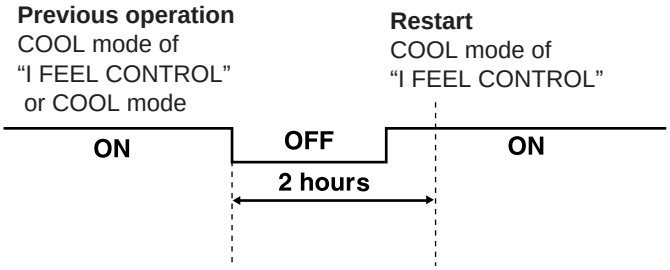

- When the system is restarted after 2 hours and more, the operation mode is determined by the room temperature at start-up of the operation.

Operation time chart Example

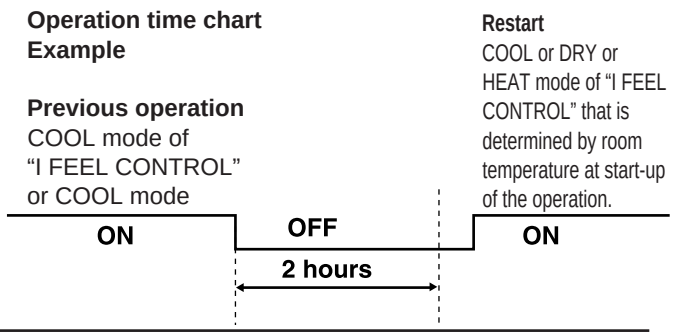

(4) The initial set temperature is decided by the initial room temperature.

Model	Initial room temperature	Initial set temperature	
COOL mode of "I FEEL CONTROL"	26℃ or more	24℃	※
	25℃ to 26℃	Initial room temperature minus 2℃	
DRY mode of "I FEEL CONTROL"	23℃ to 25℃	Initial room temperature minus 2℃	
HEAT mode of "I FEEL CONTROL"	less than 23℃	26℃	

※ When the system is restarted with the remote controller, the system operates with the previous set temperature regardless of room temperature at restart.
The set temperature is calculated by the previous set temperature.

(5) TEMPERATURE buttons
In "I FEEL CONTROL" mode, set temperature is decided by the microprocessor based on the room temperature.
In addition, set temperature can be controlled by TOO WARM or TOO COOL buttons when you feel too warm or too cool.
Each time the TOO WARM or TOO COOL button is pressed, the indoor unit receives the signal and emits a beep tone.

● **Fuzzy control**
When the TOO COOL or TOO WARM button is pressed, the microprocessor changes the set temperature, considering the room temperature, the frequency of pressing TOO COOL or TOO WARM button, and the user's preference to heat or cool. So this is called "Fuzzy control", and works only in "I FEEL CONTROL" mode.
In DRY mode of "I FEEL CONTROL", the set temperature doesn't change.

TOO COOL ▲ ··· To raise the set temperature 1~2 degrees(°C)

TOO WARM ▼ ··· To lower the set temperature 1~2 degrees(°C)

a.1. COOL mode of "I FEEL CONTROL"

1. Thermostat control
Thermostat is ON or OFF by difference between room temperature and set temperature.

Initial temperature difference	Thermostat
Room temperature minus set temperature : 0.3 ℃ or more	ON
Room temperature minus set temperature : less than -0.3 ℃	OFF

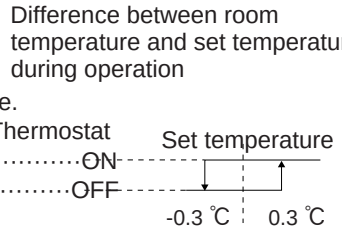

2. Indoor fan speed control
Indoor fan operates continuously at the set speed by FAN SPEED CONTROL button regardless of the thermostat's OFF-ON.
In AUTO the fan speed is as follows.

Initial temperature difference	
Room temperature minus set temperature : 1.7 degrees or more	Hi
Room temperature minus set temperature : Between 1 and 1.7 degrees	Med.
Room temperature minus set temperature : less than 1 degree	Lo

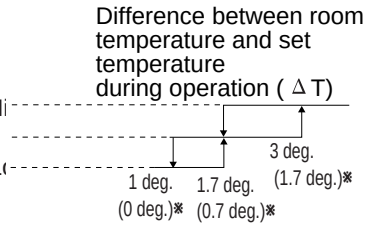

※In case that Δ T has been any following condition for 30 minutes, the value in the parentheses is applied.
a. Fan speed is Auto Low, and Δ T is 1 degree or more.
b. Fan speed is Auto Med., and Δ T is 1.7 degrees or more.

3. Coil frost prevention
① Temperature control
When the indoor coil thermistor RT12 reads 3°C (MCFH-A12WV)/ -1°C (MCFH-A18/A24WV) or below, the coil frost prevention mode starts immediately.
However, the coil frost prevention doesn't work for 5 minutes since the compressor has started.
The indoor fan operates at the set speed and the compressor stops for 5 minutes.
After that, if RT12 still reads below 3°C (MCFH-A12WV)/ -1°C (MCFH-A18/A24WV), this mode prolonged until the RT12 reads over 3°C (MCFH-A12WV)/ -1°C (MCFH-A18/A24WV).

② Time control
When the three conditions as follows have been satisfied for 1 hour and 45 minutes, compressor stops for 3 minutes.
The indoor fan operates at set speed.
a. Compressor has been continuously operating.
b. Indoor fan speed is Low or Med..
c. Room temperature is below 26°C.

When compressor stops, the accumulated time is cancelled and when compressor restarts, time counting starts from the beginning.
Time counting also stops temporarily when the indoor fan speed becomes High or the room temperature exceeds 26°C.
However, when two of the above conditions (b. and c.) are satisfied again, time accumulation is resumed.

Operation chart
Example

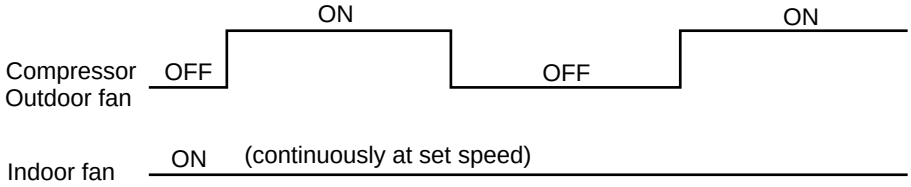

a.2. DRY mode of "I FEEL CONTROL"

The system for dry operation uses the same refrigerant circuit as the cooling circuit.
The compressor and the indoor fan are controlled by the room temperature.
By such controls, indoor air flow amounts will be reduced in order to lower humidity without much room temperature decrease.

1. Thermostat control

Thermostat is ON or OFF by difference between room temperature and set temperature.

Initial temperature difference	Thermostat
Room temperature minus set temperature : 0.3 ℃ or more	ON
Room temperature minus set temperature : less than -0.3 ℃	OFF

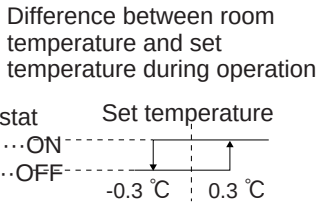

2. Indoor fan speed control

Indoor fan operates at the set speed by FAN SPEED CONTROL button.
However, in AUTO fan operation, fan speed becomes Low.

3. The operation of the compressor and indoor/ outdoor fan

Compressor operates by room temperature control and time control.
Set temperature is controlled to fall 2°C from initial room temperature.
Indoor fan and outdoor fan operate in the same cycle as the compressor.

- When the room temperature is 23°C or over:
  When the thermostat is ON, the compressor repeats 8 minutes ON and 3 minutes OFF.
  When the thermostat is OFF, the compressor repeats 4 minutes OFF and 1 minute ON.
- When the room temperature is under 23°C.
  When the thermostat is ON, the compressor repeats 2 minutes ON and 3 minutes OFF.
  When the thermostat is OFF, the compressor repeats 4 minutes OFF and 1 minute ON.

Operation time chart
Example

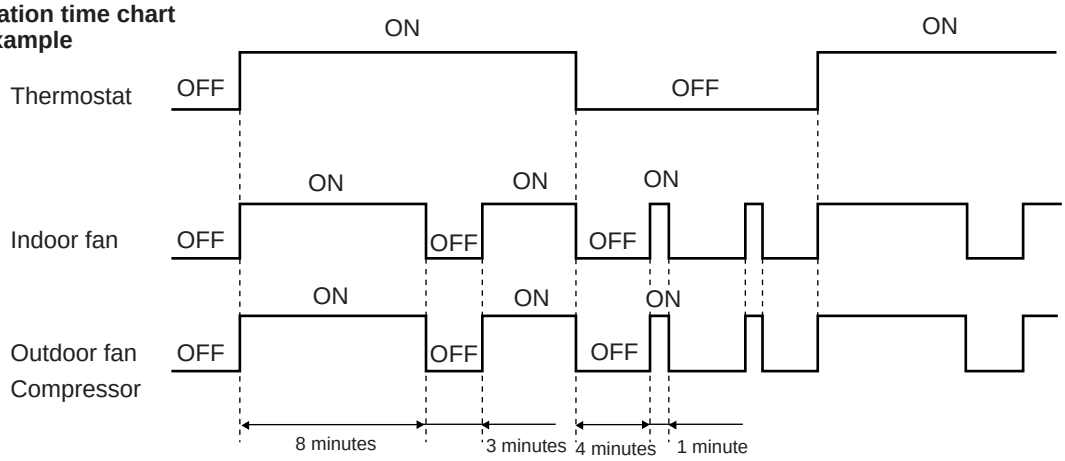

4. Coil frost prevention

- The operation is as same as coil frost prevention during COOL mode of "I FEEL CONTROL".
- Indoor fan operates at the set speed and the compressor stops for 5 minutes, because protection (Coil frost prevention) has the priority.
  However, when coil frost prevention works while the compressor is not operating, it's speed becomes Low.

a.3. HEAT mode of "I FEEL CONTROL"

1. Thermostat control

Thermostat is ON or OFF by difference between room temperature and set temperature.

Initial temperature difference	Thermostat
Room temperature minus set temperature : less than -0.3 ℃	ON
Room temperature minus set temperature : 0.3 ℃ or more	OFF

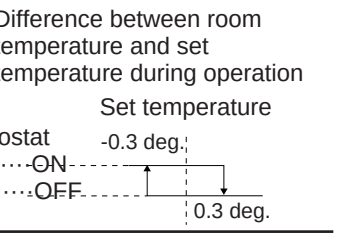

2. Indoor fan speed control

(1) In AUTO the fan speed is as follows.

Initial temperature difference	Fan speed
Set temperature minus room temperature: 2 degrees or more	High
Set temperature minus room temperature: Between 1 and 2 degrees	Med.
Set temperature minus room temperature: less than 1 degree	Low

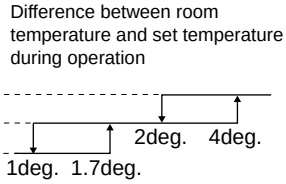

(2) Cold air prevention control

The fan runs at set speed when the indoor coil thermistor RT12 temperature exceeds 22°C. The fan operates at Very Low when the temperature of indoor coil thermistor RT12 is below 18°C. But the fan stops when the indoor fan operates at Very Low and the room temperature is 15°C or less.

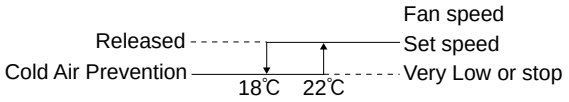

NOTE : If the temperature of RT12 reads from 18°C to 22°C at the air conditioner starting and also after defrosting, this control works.

(3) Warm air control

When compressor starts in heating operation or after defrosting, the fan changes the speed due to the indoor coil thermistor RT12 temperature to blow out warm air.
After releasing of cold air prevention, when the indoor coil temperature is 37°C or above, or when the fan speed is changed by the remote controller, the fan speed shifts to the set speed.
When the indoor coil temperature is less than 37°C, the fan speed is controlled by time as below.

<Time condition>	<Indoor fan speed>
less than 2 minutes	Low
2 minutes to 4 minutes	Med.
4 minutes or more	High

The upper limit of the fan speed is the set speed.
If the thermostat turns off, this operation changes to flow soft control.

(4) Flow soft control

After the thermostat turns off, the indoor fan operates at Very Low.
※ When the thermostat turns on, the fan operates at the set speed. Due to the cold air prevention control, the fan does not start at set speed until the indoor coil thermistor RT12 reads 22°C or more.

NOTE : As for high pressure protection, defrosting and R.V. coil control, refer to service manual for outdoor unit.

3. High pressure protection

During heating operation, the outdoor fan motor is controlled by the temperature of indoor coil thermistor RT12 temperature for excess rise protection of compressor discharge pressure.
Outdoor fan OFF : 53°C (MUCFH-A24WV), 52°C (MUCFH-A18WV)
Outdoor fan ON : 50°C (MUCFH-A24WV), 48°C (MUCFH-A18WV)

High pressure protection chart Example

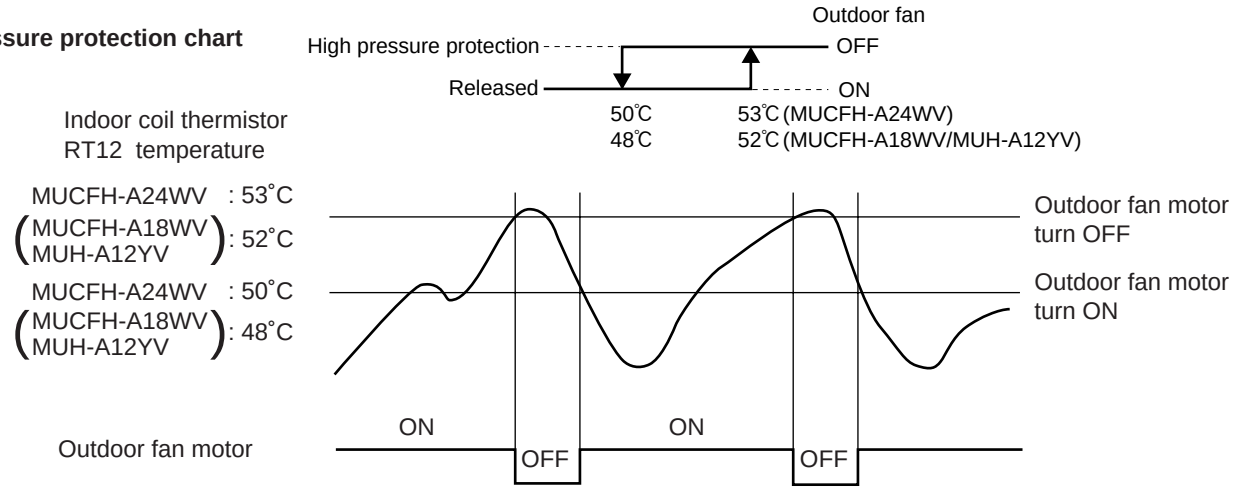

NOTE : When the outdoor fan is OFF in heating, defrosting of outdoor heat exchanger is not detected by the defrost thermistor RT61.

4. Defrosting

Defrosting of outdoor heat exchanger is controlled by DEICER P.C. board, with detection by the defrost thermistor RT61.

(1) Starting conditions of defrost

When all conditions of a) ~ c) are satisfied, the defrosting operation starts.

a) The compressor cumulative operation time exceeds 40 minutes without the defrosting operation working.

b) The defrost thermistor RT61 reads - 3°C or less.

c) After releasing the high pressure protection 4 minutes and 15 seconds have elapsed.

(2) Releasing conditions of defrost

When the condition d) or e) is satisfied, the defrosting operation stops.

d) The defrost thermistor RT61 reads 3.1°C or more.

e) The defrosting time exceeds 10 minutes.

(3) Defrosting time chart

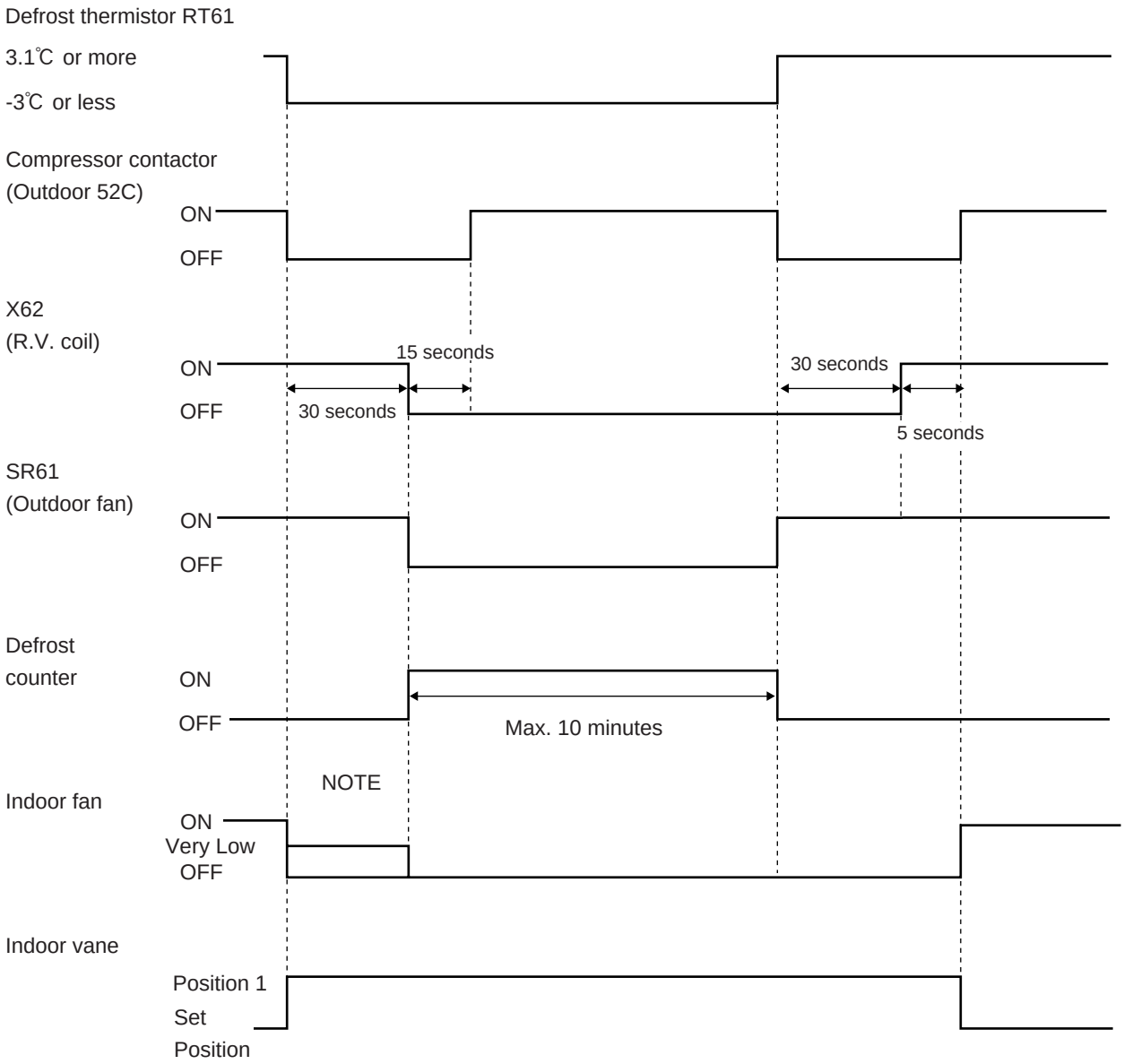

NOTE : When the indoor coil thermistor reads above 18°C, indoor fan operates at Very Low for 30 seconds.
When the indoor coil thermistor reads 18°C or less, the indoor fan stops.

b. COOL (✿) OPERATION

(1) Press OPERATE/STOP(ON/OFF) button.
OPERATION INDICATOR lamp of the indoor unit turns on with a beep tone.
(2) Select COOL mode with the OPERATION SELECT button.
(3) Press the TEMPERATURE buttons
(TOO WARM or TOO COOL button)
to select the desired temperature.
The setting range is 16 ~ 31°C.
※ Indoor fan continues to operate regardless of thermostat's OFF-ON at set speed.
※ Coil frost prevention is same as COOL mode of "I FEEL CONTROL".

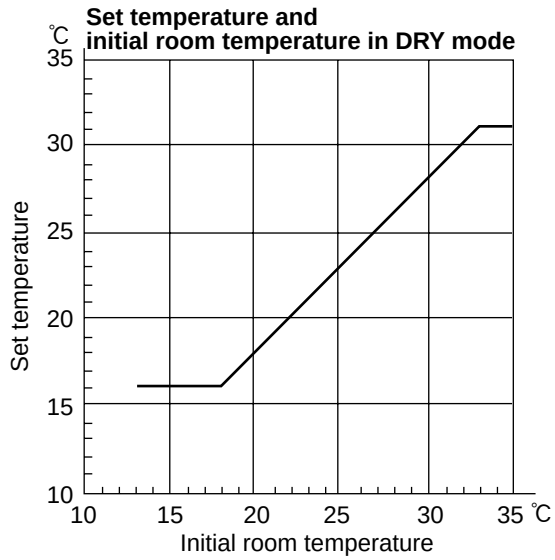

c. DRY (♢) OPERATION

(1) Press OPERATE/STOP(ON/OFF) button.
OPERATION INDICATOR lamp of the indoor unit turns on with a beep tone.
(2) Select DRY mode with the OPERATION SELECT button.
(3) The microprocessor reads the room temperature and determines the set temperature. Set temperature is as shown on the right chart.
Thermostat (SET TEMP.) does not work.
The other operations are same as DRY mode of "I FEEL CONTROL".
(4) DRY operation will not function when the room temperature is 13°C or below.

d. HEAT (☼) OPERATION

(1) Press OPERATE/STOP(ON/OFF) button.
OPERATION INDICATOR lamp of the indoor unit turns on with a beep tone.
(2) Select HEAT mode with the OPERATION SELECT button.
(3) Press TEMPERATURE buttons (TOO WARM or TOO COOL button) to select the desired temperature.
The setting range is 16 ~ 31°C.
(4) Indoor fan speed control is as same as HEAT mode of "I FEEL CONTROL".

e. AUTO VANE OPERATION

(1) Vane motor drive
This series is equipped with a stepping motor for the vane. The rotating direction, speed, and angle of the motor are controlled by pulse signals (approximate 12V) transmitted from indoor microprocessor.
(2) Each time the VANE CONTROL button is pressed, angle of horizontal vane is changed in sequence, from 1, 2, 3, 4, 5 SWING to AUTO.

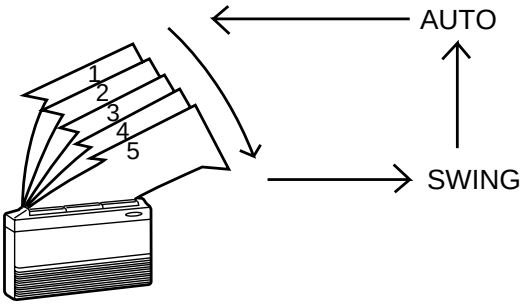

(3) Positioning
The vane is once pressed to the vane stopper to confirm the standard position and then moves to the set angle.
Confirming of standard position is performed in case of follows.
(a) When the power supply turns ON.
(b) When the operation starts or finishes (including timer operation)
(c) When the test run starts.
(d) When the vane control is changed AUTO to MANUAL (except SWING).
(e) When the SWING is finished (including ECONO COOL).

(4) VANE AUTO mode

In VANE AUTO mode, the microprocessor automatically determines the vane angle and operation to make the optimum room-temperature distribution.

1. In COOL and DRY operation

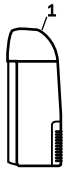

Vane angle is fixed to Angle 1.

2. In HEAT operation

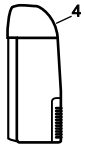

Vane angle is fixed to Angle 4.

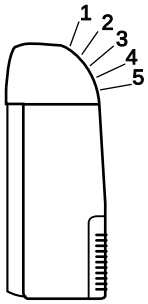

(5) STOP (operation OFF) and ON-TIMER standby

When the following cases occur, the vane returns to the closed position.

(a) When the OPERATE/STOP (ON/OFF) button is pressed (POWER OFF).

(b) When the operation is stopped by the emergency operation.

(c) When the ON-TIMER is on standby.

(6) Dew prevention

During COOL or DRY operation at Angle 4 or 5 when the compressor cumulative operation time exceeds 1 hour, the angle of horizontal vane automatically changes to Angle 1 for dew prevention.

(7) SWING MODE ( )

By selecting SWING mode with the VANE CONTROL button, the horizontal vane swings vertically.

The remote controller displays " ". SWING mode is cancelled when the VANE CONTROL button is pressed once again.

(8) Cold air prevention in HEAT operation.

When any of the following conditions occurs in HEAT operation, the angle of horizontal vane automatically changes to Position 1 to prevent cold air blowing on users.

① Compressor is not operating.

② Defrosting is performed.

③ Indoor coil thermistor RT12 reads 24℃ or below.

④ Indoor coil thermistor RT12 temperature is raising from 24℃ or below, but it does not exceed 28℃.

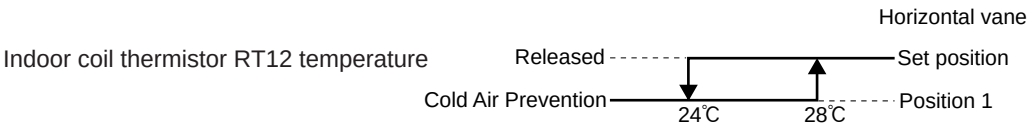

NOTE1: If the temperature of RT12 reads from 24℃ to 28℃ at the air conditioner starting, this control works.

NOTE2: When 2 or more indoor units are operated with multi outdoor unit, even if any indoor unit turns thermostat off, this control doesn't work in the indoor unit.

(9) ECONO COOL ( ) operation (ECONOmical operation)

When the ECONO COOL button is pressed in COOL mode, set temperature is automatically set 2°C higher than that in COOL mode.

Also the horizontal vane swings in various cycle according to the temperature of indoor heat exchanger(RT12).

SWING operation makes you feel cooler than set temperature. So, even though the set temperature is higher than that in COOL mode, the air conditioner can keep comfort. As a result, energy can be saved.

ECONO COOL operation is cancelled when the ECONO COOL button is pressed once again or VANE CONTROL button is pressed or change to other operation mode.

NOTE : ECONO COOL operation does not work in COOL mode of "I FEEL CONTROL".

SWING operation

In swing operation of ECONO COOL operation mode, the initial air flow direction is adjusted to “Horizontal”.
According to the temperature of indoor coil thermistor RT12 at starting of this operation, next downward blow time is decided. Then when the downward blow has been finished, next horizontal blow time is decided.
For initial 10 minutes the swing operation is performed in table G~H for quick cooling.
Also, after 10 minutes when the difference of set temperature and room temperature is more than 2 °C, the swing operation is performed in table D~H for more cooling.
The air conditioner repeats the swing operation in various cycle as follows.

	Temperature of indoor coil thermistor RT12	Downward blow time (second)	Horizontal blow time (second)
A	15°C or less	2	23
B	15°C to 17°C	5	20
C	17°C to 18°C	8	17
D	18°C to 20°C	11	14
E	20°C to 21°C	14	11
F	21°C to 22°C	17	8
G	22°C to 24°C	20	5
H	more than 24°C	23	2

f. TIMER OPERATION

1. How to set the timer

(1) Press OPERATE/STOP(ON/OFF) button to start the air conditioner.
(2) Check that the current time is set correctly.
NOTE : Timer operation will not work without setting the current time. Initially “AM0:00” blinks at the current time display of TIME MONITOR, so set the current time correctly with CLOCK SET button.
(3) Press ON/OFF TIMER buttons to select the operation.
“ON-TIMER” button ... AUTO START operation (ON timer)
“OFF-TIMER” button ... AUTO STOP operation (OFF timer)
(4) Press HR. and MIN. button to set the timer. Time setting is 10-minute units.
HR. and MIN. button will work when “ ◴→| ” or “ ◴→○ ” mark is flashing.
These marks disappear in 1 minute.
After setting the ON timer, check that OPERATION INDICATOR lamp of the indoor unit lights.
NOTE1 : Be sure to place the remote controller at the position where its signal can reach the air conditioner even during TIMER operation, or the set time may deviate within the range of about 10 minutes.
NOTE2 : Reset the timer in the following cases, or the set time may deviate and other malfunctions may occur.
- A power failure occurs.
- The circuit breaker functions.

2. Cancel

TIMER setting can be cancelled with the ON/OFF TIMER buttons. (“ ◴→| ” or “ ◴→○ ”)
To cancel the ON timer, press the “ON-TIMER” button.
To cancel the OFF timer, press the “OFF-TIMER” button.
TIMER is cancelled and the display of set time disappears.

PROGRAM TIMER

- The OFF timer and ON timer can be used in combination.
- “ ↓ ” and “ ↑” display show the order of the OFF timer and ON timer operation.

(Example 1) The current timer is 8:00 PM.
The unit turns off at 11:00 PM, and on at 6:00 AM.

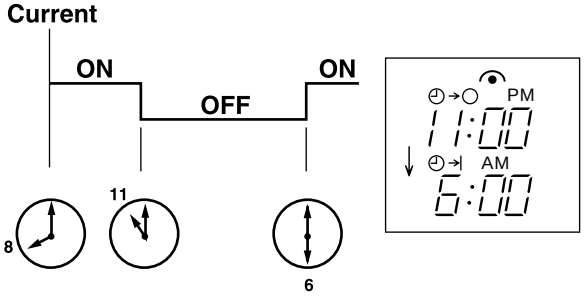

(Example 2) The current time is 11:00 AM.
The unit turns on at 5:00 PM, and off at 9:00 PM.

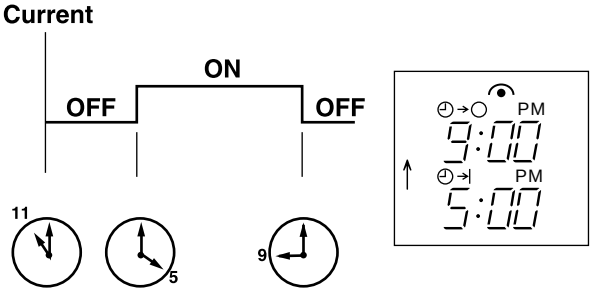

NOTE : TIMER setting will be cancelled by power failure or breaker functioning.

g. EMERGENCY / TEST OPERATION

In case of test run operation or emergency operation, use the EMERGENCY OPERATION switch on the front of the indoor unit. Emergency operation is available when the remote controller is missing, has failed or the batteries of remote controller run down. The unit will start and the OPERATION INDICATOR lamp will light.
The first 30 minutes of operation is the test run operation. This operation is for servicing. The indoor fan speed runs at High speed and the system is in continuous operation. (The thermostat is ON.)
After 30 minutes of test run operation the system shifts to EMERGENCY COOL / HEAT MODE with a set temperature of 24°C.
The fan speed shifts to Med. speed.
The coil frost prevention works even in emergency operation, and defrosting too.
In the test run or emergency operation, the horizontal vane operates in VANE AUTO ( ) mode.
Emergency operation continues until the EMERGENCY OPERATION switch is pressed once or twice or the unit receives any signal from the remote controller. In case of latter normal operation will start.

NOTE : Do not press the EMERGENCY OPERATION switch during normal operation.

EMERGENCY OPERATION switch

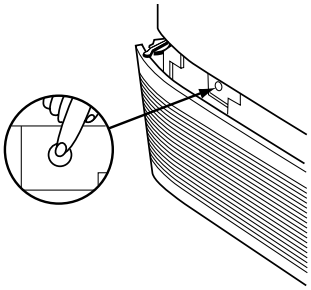

• The following indication applies regardless of shape of the indicator.

OPERATION INDICATOR lamp

Press once	<Cool>	■	□
Press again	<Heat>	□	■
Press once again	<Stop>	□	□

C.2.11.3 MCFZ-A·WV Series

MCFZ-A12WV (As for outdoor unit MUZ-A12YV and MUZ-A12YVH, refer to page C-218.)
MCFZ-A18WV
MCFZ-A24WV (As for outdoor unit MUZ-A18YV and MUZ-A24YV, refer to page C-233.)

WIRELESS REMOTE CONTROLLER

MCFZ-A12WV

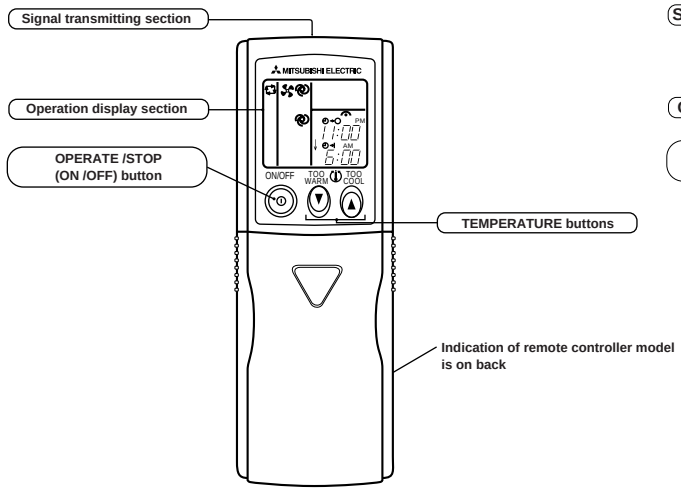

MCFZ-A18WV MCFZ-A24WV

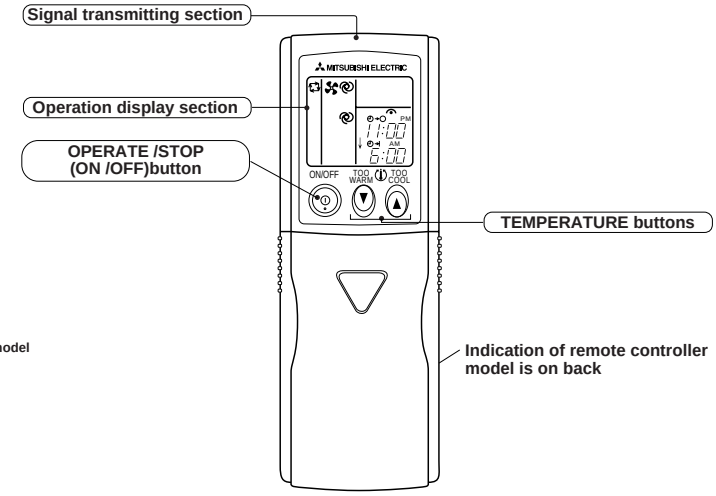

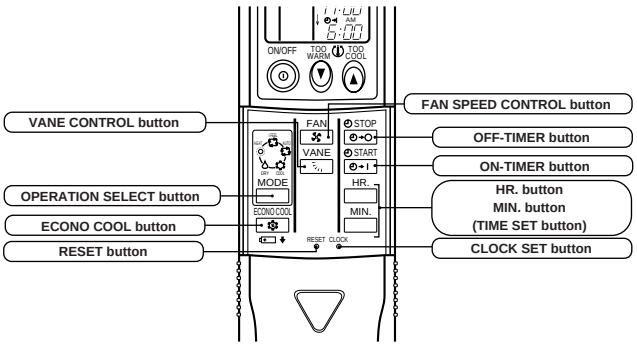

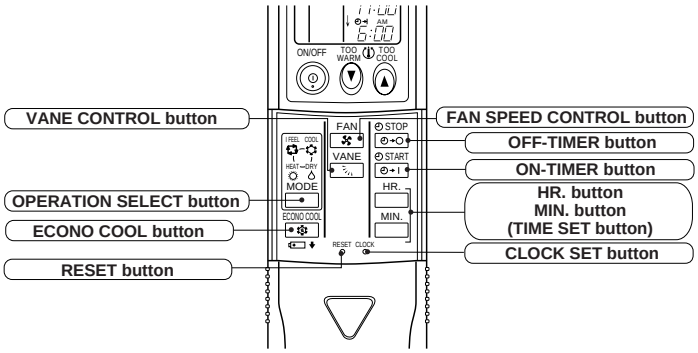

INDOOR UNIT DISPLAY SECTION

Operation Indicator lamp

The operation indicator at the right side of the indoor unit indicates the operation state.

•The following indication applies regardless of shape of the indicator.

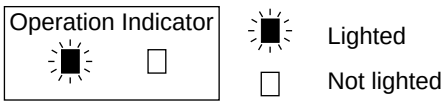

Indication	Operation state	Difference between target temperature and room temperature
■ ■	This shows that the air conditioner is operating to reach the target temperature. Please wait until the target temperature is obtained.	Approx. 2 ℃ or more
■ □	This shows that the room temperature is approaching the target temperature.	Approx. 2 ℃ or less

Once the operation mode are set, the same operation mode can be repeated by simply turning the OPERATE/STOP (ON/OFF) button ON.
Indoor unit receives the signal with a beep tone.
When the system turns off, 3-minute time delay will operate to protect system from overload and compressor will not restart for 3 minutes.

a. "I FEEL CONTROL" (▭) OPERATION

1. Press OPERATE/STOP(ON/OFF) button on the remote controller. OPERATION INDICATOR lamp of the indoor unit will turn on with a beep tone.
2. Select "I FEEL CONTROL"(▭) mode with the OPERATION SELECT button.
3. The operation mode is determined by the room temperature at start-up of the operation.

Initial room temperature	Mode
25℃ or more	COOL mode of "I FEEL CONTROL"
23℃ to 25℃	DRY mode of "I FEEL CONTROL"
less than 23℃	HEAT mode of "I FEEL CONTROL"

- Once the mode is fixed, the mode does not change by room temperature afterwards.
- Under the ON-TIMER (◴—|) operation, mode is determined according to the room temperature at set time the operation starts.
- When the system is stopped on the remote controller, and restarted within 2 hours in “I FEEL CONTROL” (▭) mode, the system operates in previous mode automatically regardless of the room temperature.

Example

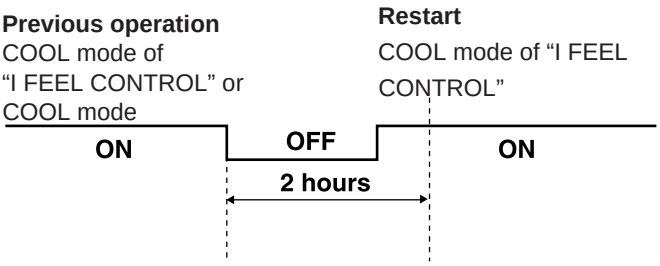

When the system is restarted after 2 hours and more, the operation mode is determined by the room temperature at start-up of the operation.

Example

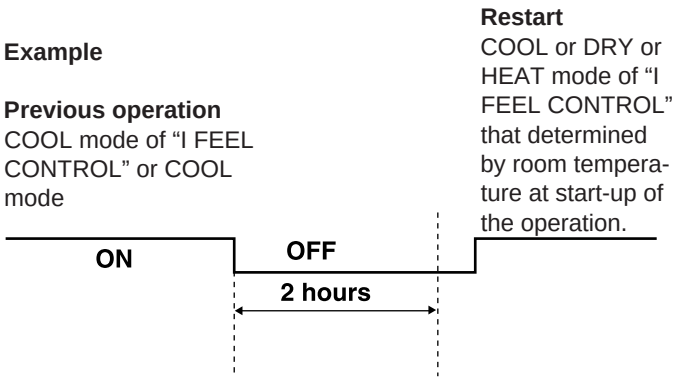

4. The initial set temperature is decided by the initial room temperature.

Model	Initial room temperature	Initial set temperature	
COOL mode of "I FEEL CONTROL"	26℃ or more	24℃	※
	25℃ to 26℃	Initial room temperature minus 2℃	
DRY mode of "I FEEL CONTROL"	23℃ to 25℃	Initial room temperature minus 2℃	
HEAT mode of "I FEEL CONTROL"	less than 23℃	26℃	

※ When the system is restarted with the remote controller, the system operates with the previous set temperature regardless of the room temperature at restart.
The set temperature is calculated by the previous set temperature.

5. TEMPERATURE buttons
In “I FEEL CONTROL” (▭)mode, set temperature is decided by the microprocessor based on the room temperature.
In addition, set temperature can be controlled by TOO WARM or TOO COOL buttons when you feel too cool or too warm.
Each time the TOO WARM or TOO COOL button is speed, the indoor unit receives the signal emits a beep tone.

- Fuzzy control
  When the TOO COOL or TOO WARM button is pressed, the microprocessor changes the set temperature, considering the room temperature, the frequency of pressing TOO COOL or TOO WARM button and the user’s preference to heat or cool. So this is called “Fuzzy control”, and works only in “I FEEL CONTROL” mode.
  In DRY mode of “I FEEL CONTROL”, the set temperature doesn’t change.

…To raise the set temperature 1 ~ 2 degrees (℃)

… To lower the set temperature 1 ~ 2 degrees (℃)

a.1. COOL mode of "I FEEL CONTROL"

1. Thermostat control

Thermostat is ON or OFF by difference between room temperature and set temperature.

Difference between room temperature and set temperature during operation.

Initial temperature difference	Thermostat
Room temperature minus set temperature : 0.3 ℃ or more	ON
Room temperature minus set temperature : less than -0.3 ℃	OFF

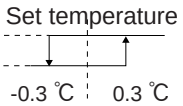

2. Indoor fan speed control

Indoor fan operates continuously at the set speed by FAN SPEED CONTROL button regardless of the thermostat's OFF-ON.
In AUTO the fan speed is as follows.

Difference between room temperature and set temperature during operation (Δ T)

Initial temperature difference	Fan speed
Room temperature minus set temperature : 1.7 degrees or more	High
Room temperature minus set temperature : Between 1 and 1.7 degrees	Med.
Room temperature minus set temperature : less than 1 degree	Low

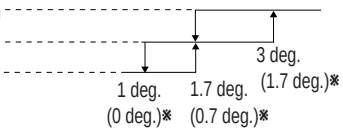

※In case that Δ T has been any following condition for 30 minutes, the value in the parentheses is applied.
a. Fan speed is Auto Low, and Δ T is 1 degree or more.
b. Fan speed is Auto Med., and Δ T is 1.7 degrees or more.

3. Coil frost prevention

① Temperature control

The operational frequency of the compressor is controlled based on the temperature of the indoor coil thermistor.

Temperature of indoor coil thermistor	Operation frequency
8°C or more	Normal (variable)
6°C to 8°C	Fixed
3°C to 6°C	Lower at the rate of 3Hz/90seconds
3°C or less	Lower at the rate of 6Hz/minutes Compressor is turned OFF for 5 minutes when temperature of indoor coil thermistor continues 3°C or less for 5 minutes or more.

The indoor fan maintains the actual speed of the moment.

② Time control

When the three conditions as follows have been satisfied for 1 hour and 45 minutes, compressor stops for 3 minutes.
The indoor fan operates at set speed.
a. Compressor has been continuously operating.
b. Indoor fan speed is Low or Med.
c. Room temperature is below 13℃.
When compressor stops, the accumulated time is cancelled. When compressor restarts, time counting starts from the beginning.
Time counting also stops temporarily when the indoor fan speed becomes High or the room temperature exceeds 13℃.
However, when two of the above conditions(b and c.) are satisfied again. Time accumulation is resumed.

4. Outdoor fan control

Refer to C-235 for MUZ-A18/A24YV.

5. Low outside temperature operation

Refer to C-220 for MUZ-A12YV(H) and C-236 for MUZ-A18/A24YV.

a.2. DRY mode of "I FEEL CONTROL"

The system for dry operation uses the same refrigerant circuit as the cooling circuit.
The compressor and the indoor fan are controlled by the room temperature.
By such controls, indoor flow amounts will be reduced in order to lower humidity without much room temperature decrease.

1. Thermostat control

Thermostat is ON or OFF by difference between room temperature and set temperature.

Difference between room temperature and set temperature during operation

Initial temperature difference	Thermostat
Room temperature minus set temperature : 0.3 ℃ or more	ON
Room temperature minus set temperature : less than -0.3 ℃	OFF

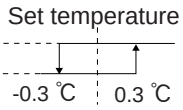

2. Indoor fan speed control.

Indoor fan operates at the set speed by FAN SPEED CONTROL button.

When thermostat OFF (compressor OFF) fan speed becomes Very Low.

3. The operation of the compressor and indoor fan/ outdoor fan

Compressor operates by temperature control and time control.

① Set temperature is controlled to fall 2°C from initial room temperature.

② Operational frequency of compressor during operation is fixed to 30Hz.

4. Coil frost prevention

Coil frost prevention is as same as COOL mode of “I FEEL CONTROL”. (a.1.3.)

The indoor fan maintains the actual speed of the moment. However, when coil frost prevention works while the compressor is not operating (= indoor fan speed Very Low), it’s speed becomes the set speed.

5. Outdoor fan control

Refer to C-236 for MUZ-A18/A24YV.

6. Low outside temperature operation

Refer to C-221 for MUZ-A12YV(H) and C-236 for MUZ-A18/A24YV.

a.3. HEAT mode of “I FEEL CONTROL”

1. Thermostat control

Thermostat is ON or OFF by difference between room temperature and set temperature.

Initial temperature difference	Thermostat
Room temperature minus set temperature : less than -0.3 ℃	ON
Room temperature minus set temperature : 0.3 ℃ or more	OFF

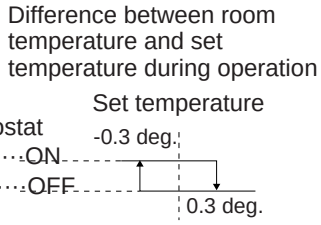

2. Indoor fan speed control

(1) Indoor fan operates at the set speed by FAN SPEED CONTROL button.

In Auto the fan speed is as follows.

Initial temperature difference	Fan speed
Set temperature minus room temperature: 2 degrees or more	High
Set temperature minus room temperature: Between 1 and 2 degrees	Med.
Set temperature minus room temperature: less than 1 degree	Low

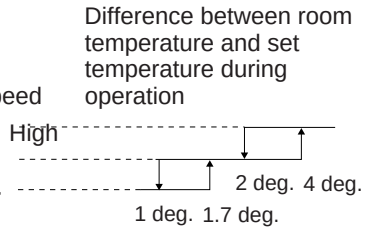

(2) Cold air prevention control

① When the compressor is not operating,

(Ⅰ) if the temperature of indoor coil thermistor RT12 is 0°C (MCFZ-A12WV) /18°C (MCFZ-A18/A24WV) or less, the fan stops.

(Ⅱ) if the temperature of indoor coil thermistor RT12 is more than 0°C (MCFZ-A12WV) /18°C (MCFZ-A18/A24WV), the fan operates at Very Low.

② When the compressor is operating,

(Ⅰ) if the temperature of RT12 is 22°C or more, the fan operates at set speed.

(Ⅱ) if the temperature of RT12 is less than 22°C and

(ⅰ) if heating operation starts after defrosting, the fan stops.

(ⅱ) if the temperature of room temperature thermistor RT11 is 15°C or less, the fan stops.

(ⅲ) if the temperature of room temperature thermistor RT11 is more than 15°C, the fan operates at Very Low.

(3) Warm air control

When compressor starts in heating operation or after defrosting, the fan changes the speed due to the indoor coil thermistor RT12 temperature to blow out warm air.

After releasing of cold air prevention, when the indoor coil temperature is 37°C or above, or when the fan speed is changed by the remote controller, the fan speed shifts to the set speed.

When the indoor coil temperature is less than 37°C, the fan speed is controlled by time as below.

<Time condition>	<Indoor fan speed>
less than 2 minutes	Low
2 minutes to 4 minutes	Med.
4 minutes or more	High

The upper limit of the fan speed is the set speed.

If the thermostat turns off, this operation changes to flow soft control.

(4) Flow soft control

When the thermostat (compressor) is off, the indoor fan operates as follows.

Compressor	Fan
OFF	Very Low
ON	Set speed

NOTE : When the thermostat(compressor) turns ON, the fan will operate at set speed. But until cold air prevention and warm air control is released, the fan speed follow them.

3. Outdoor fan control

Refer to C-237 for MUZ-A18/A24YV.

4. High pressure protection

Refer to C-222 for MUZ-A12YV(H) and C-237 for MUZ-A18/A24YV.

5. Overloard starting

Refer to C-222 for MUZ-A12YV(H) and C-237 for MUZ-A18/A24YV.

6. Defrosting

Refer to C-222 for MUZ-A12YV(H) and C-237 for MUZ-A18/A24YV.

7. Defrost heater(MUZ-A12YVH)

Refer to C-222 for MUZ-A12YVH.

b. AUTO CHANGE OVER ··· AUTO MODE OPERATION (MCFZ-A12WV)

Once desired temperature is set, unit operation is switched automatically between COOL and HEAT operation.

1. Mode selection

(1) Initial mode

At first indoor unit operates only indoor fan with outdoor unit OFF for 3 minutes to detect present room temperature. Following the conditions below, operation mode is selected.

① If the room temperature thermistor RT11 reads more than set temperature, COOL mode is selected.

② If the room temperature thermistor RT11 reads set temperature or less, HEAT mode is selected.

(2) Mode change

In case of the following conditions the operation mode is changed.

① COOL mode changes to HEAT mode when 15 minutes have passed with the room temperature 2 degrees below the set temperature.

② HEAT mode changes to COOL mode when 15 minutes have passed with the room temperature 2 degrees above the set temperature.

In the other cases than the above conditions, the present operation mode is continued.

(3) Indoor fan control/ Vane control

As the indoor fan speed and the horizontal vane position depend on the selected operation mode, when the operation mode changes over, they change to the exclusive ones.

c. COOL (✿) OPERATION

(1) Press OPERATE/STOP(ON/OFF) button.

OPERATION INDICATOR lamp of the indoor unit turns on with a beep tone.

(2) Select COOL mode with the OPERATION SELECT button.

(3) Press TEMPERATURE buttons (TOO WARM or TOO COOL button)to select the desired temperature.

The setting range is 16 ~ 31°C.

1. Thermostat control

Thermostat control is as same as COOL mode of “I FEEL CONTROL”.(a.1.1.)

2. Indoor fan speed control

Indoor fan speed control is as same as COOL mode of “I FEEL CONTROL”.(a.1.2.)

3. Coil frost prevention

Coil frost prevention is as same as COOL mode of “I FEEL CONTROL”.(a.1.3.)

4. Outdoor fan control

Refer to C-238 for MUZ-A18/A24YV.

5. Low outside temperature operation

Refer to C-224 for MUZ-A12YV(H) and C-238 for MUZ-A18/A24YV.

d. DRY (◇) OPERATION

(1) Press OPERATE/STOP(ON/OFF) button.

OPERATION INDICATOR lamp of the indoor unit turns on with a beep tone.

(2) Select DRY mode with the OPERATION SELECT button.

(3) The microprocessor reads the room temperature and determines the set temperature. Set temperature is as shown on the right chart.

(4) DRY operation will not function when the room temperature is 13°C or below.

1. Thermostat control

Thermostat control is as same as DRY mode of “I FEEL CONTROL”.(a.2.1.)

2. Indoor fan speed control

Indoor fan speed control is as same as DRY mode of “I FEEL CONTROL”.(a.2.2.)

3. The operation of the compressor and indoor/outdoor fan

The operation of the compressor and indoor/outdoor fan is as same as DRY mode of “I FEEL CONTROL”.(a.2.3.)

4. Coil frost prevention

Coil frost prevention is as same as DRY mode of “I FEEL CONTROL”.(a.2.4.)

5. Outdoor fan control

Refer to C-238 for MUZ-A18/A24YV.

6. Low outside temperature operation

Refer to C-224 for MUZ-A12YV(H) and C-238 for MUZ-A18/A24YV.

Set temperature and initial room temperature in dry mode

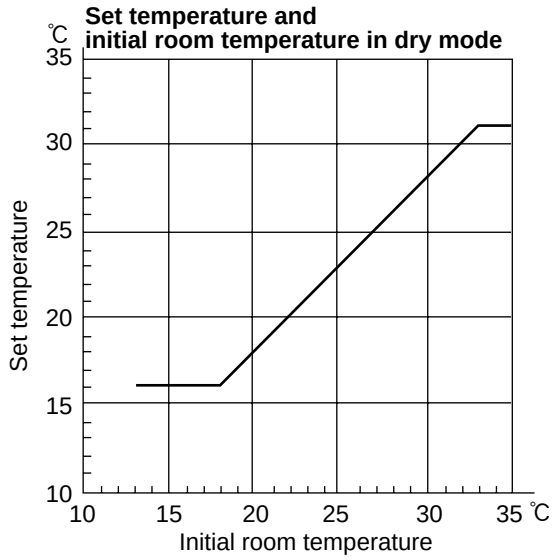

e. HEAT (☼) OPERATION

(1) Press OPERATE/STOP(ON/OFF) button.
OPERATION INDICATOR lamp of the indoor unit turns on with a beep tone.
(2) Select HEAT mode with the OPERATION SELECT button.
(3) Press TEMPERATURE buttons (TOO WARM or TOO COOL button) to select the desired temperature.
The setting range is 16 ~ 31°C.

1. Thermostat control
Thermostat control is as same as HEAT mode of “I FEEL CONTROL”.(a.3.1.)

2. Indoor fan speed control
Indoor fan speed control is as same as HEAT mode of “I FEEL CONTROL”.(a.3.2.)

3. Outdoor fan control
Refer to C-238 for MUZ-A18/A24YV.

4. High pressure protection
Refer to C-224 for MUZ-A12YV(H) and C-238 for MUZ-A18/A24YV.

5. Overloard starting
Refer to C-224 for MUZ-A12YV(H) and C-238 for MUZ-A18/A24YV.

6. Defrosting
Refer to C-224 for MUZ-A12YV(H) and C-238 for MUZ-A18/A24YV.

7. Defrost heater(MUZ-A12YVH)
Refer to C-224 for MUZ-A12YVH.

f. AUTO VANE OPERATION

(1) Vane motor drive
This series is equipped with a stepping motor for the vane. The rotating direction, speed, and angle of the motor are controlled by pulse signals (approximate 12V) transmitted from indoor microprocessor.
(2) Each time the VANE CONTROL button is pressed, angle of horizontal vane is changed in sequence, from 1, 2, 3, 4, 5 SWING to AUTO.

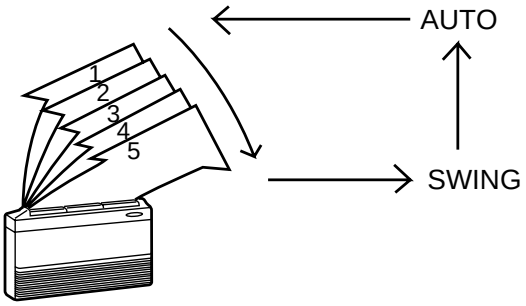

(3) Positioning
The vane is once pressed to the vane stopper to confirm the standard position and then moves to the set angle.
Confirming of standard position is performed in case of follows.
(a) When the power supply turns ON.
(b) When the operation starts or finishes (including timer operation).
(c) When the test run starts.
(d) When the vane control is changed AUTO to MANUAL (except SWING).
(e) When the SWING is finished (including ECONO COOL).

(4) VANE AUTO (@) mode
In VANE AUTO mode, the microprocessor automatically determines the vane angle and operation to make the optimum room-temperature distribution.

1. In COOL and DRY operation

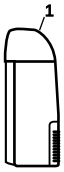

Vane angle is fixed to Angle 1.

2. In HEAT operation

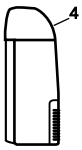

Vane angle is fixed to Angle 4.

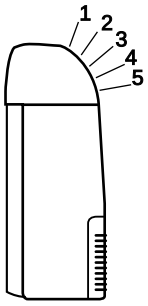

(5) STOP (operation OFF) and ON-TIMER standby
When the following cases occur, the horizontal vane returns to the closed position.
(a) When the OPERATE/STOP (ON/OFF) button is pressed (POWER OFF).
(b) When the operation is stopped by the emergency operation.
(c) When the ON-TIMER is ON standby.

(6) Dew prevention

During COOL or DRY operation with the vane angle at Angle 4 or 5 when the compressor cumulative operation time exceeds 1 hour, the vane angle automatically changes to Angle 1 for dew prevention.

(7) SWING MODE ( )

By selecting SWING mode with the VANE CONTROL button, the horizontal vane swings vertically.

The remote controller displays " ". SWING mode is cancelled when the VANE CONTROL button is pressed once again.

(8) Cold air prevention in HEAT operation.

When any of the following conditions occurs in HEAT operation, the vane angle changes to Angle 1 automatically to prevent cold air blowing on users.

① Compressor is not operating.
② Defrosting is performed.
③ Indoor coil thermistor RT12 reads 18℃ or below.
④ Indoor coil thermistor RT12 temperature is raising from 18°C or below, but it does not exceed 38℃.

Indoor coil thermistor RT12 temperature

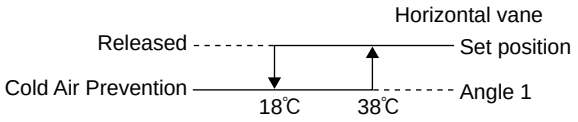

NOTE: If the temperature of RT12 reads from 18℃ to 38℃ at the air conditioner starting, this control works.

(9) ECONO COOL ( ) operation (ECONOmical operation)

When the ECONO COOL button is pressed in COOL mode, set temperature is automatically set 2°C higher than that in COOL mode.
Also the horizontal vane swings in various cycle according to the temperature of indoor heat exchanger(RT12).
SWING operation makes you feel cooler than set temperature. So, even though the set temperature is higher than that in COOL mode, the air conditioner can keep comfort. As a result, energy can be saved.
ECONO COOL operation is cancelled when the ECONO COOL button is pressed once again or VANE CONTROL button is pressed or change to other operation mode.

NOTE : ECONO COOL operation does not work in COOL mode of "I FEEL CONTROL".

SWING operation
In swing operation of ECONO COOL operation mode, the initial air flow direction is adjusted to "Horizontal".
According to the temperature of indoor coil thermistor RT12 at starting of this operation, next downward blow time is decided. Then when the downward blow has been finished, next horizontal blow time is decided.
For initial 10 minutes the swing operation is performed in table G~H for quick cooling.
Also, after 10 minutes when the difference of set temperature and room temperature is more than 2 degrees, the swing operation is performed in table D~H for more cooling.
The air conditioner repeats the swing operation in various cycle as follows.

	Temperature of indoor coil thermistor RT12	Downward blow time (second)	Horizontal blow time (second)
A	15°C or less	2	23
B	15°C to 17°C	5	20
C	17°C to 18°C	8	17
D	18°C to 20°C	11	14
E	20°C to 21°C	14	11
F	21°C to 22°C	17	8
G	22°C to 24°C	20	5
H	more than 24°C	23	2

g. TIMER OPERATION

1. How to set the timer

(1) Press OPERATE/STOP(ON/OFF) button to start the air conditioner.
(2) Check that the current time is set correctly.
NOTE : Timer operation will not work without setting the current time. Initially "AM0:00" blinks at the current time display of TIME MONITOR, so set the current time correctly with CLOCK SET button.
(3) Press ON/OFF TIMER buttons to select the operation.
"ON-TIMER" button ... AUTO START operation (ON timer)
"OFF-TIMER" button... AUTO STOP operation (OFF timer)
(4) Press HR. and MIN. button to set the timer. Time setting is 10-minute units.
HR. and MIN. button will work when " ◷→| " or " ◷→○ " mark is flashing.
These marks disappear in 1 minute.
After setting the ON timer, check that OPERATION INDICATOR lamp of the indoor unit lights.
NOTE1 : Be sure to place the remote controller at the position where its signal can reach the air conditioner even during TIMER operation, or the set time may deviate within the range of about 10 minutes.
NOTE2 : Reset the timer in the following cases, or the set time may deviate and other malfunctions may occur.
- A power failure occurs.
- The circuit breaker functions.

2. Cancel

TIMER setting can be cancelled with the ON/OFF TIMER buttons.
To cancel the ON timer, press the "ON-TIMER" button.
To cancel the OFF timer, press the "OFF-TIMER" button.
TIMER is cancelled and the display of set time disappears.

PROGRAM TIMER

- The OFF timer and ON timer can be used in combination.
- " ↑ " and " ↓ " display shows the order of the OFF timer and ON timer operation.

(Example 1) The current time is 8:00 PM.
The unit turns off at 11:00 PM, and on at 6:00 AM.

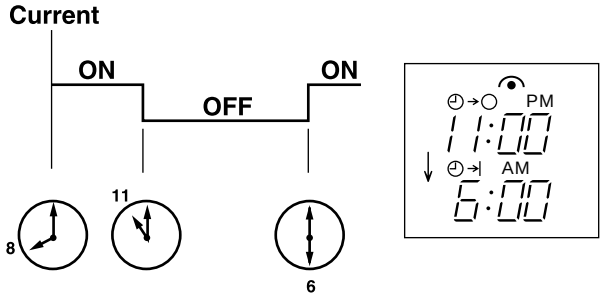

(Example 2) The current time is 11:00 AM.
The unit turns on at 5:00 PM, and off at 9:00 PM.

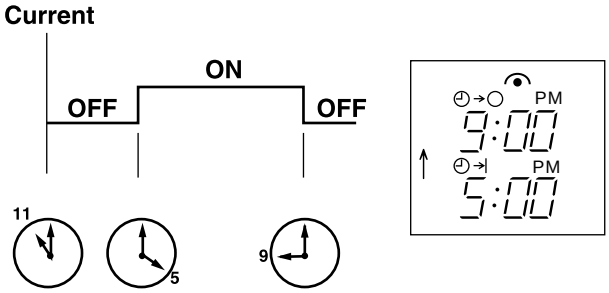

NOTE : TIMER setting will be cancelled by power failure or breaker functioning.

h. EMERGENCY / TEST OPERATION

In case of test run operation or emergency operation, use the EMERGENCY OPERATION switch on the front of the indoor unit. Emergency operation is available when the remote controller is missing, has failed or the batteries of remote controller run down. The unit will start and the OPERATION INDICATOR lamp will light.
The first 30 minutes of operation is the test run operation. This operation is for servicing. The indoor fan speed runs at High speed and the system is in continuous operation. (The thermostat is ON.)
After 30 minutes of test run operation the system shifts to EMERGENCY COOL / HEAT MODE with a set temperature of 24°C.
The fan speed shifts to Med. speed.
The coil frost prevention works even in emergency operation, and defrosting too.
In the test run or emergency operation, the horizontal vane operates in VANE AUTO (@) mode.
Emergency operation continues until the EMERGENCY OPERATION switch is pressed once or twice or the unit receives any signal from the remote controller. In case of latter normal operation will start.

NOTE: Do not press the EMERGENCY OPERATION switch during normal operation.

EMERGENCY OPERATION switch

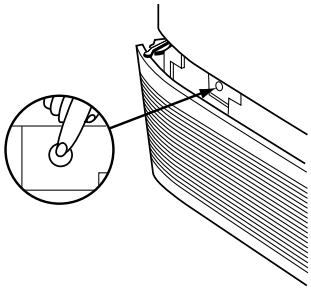

• The following indication applies regardless of shape of the indicator.

OPERATION INDICATOR lamp

Press once	<Cool>	■	□
Press again	<Heat>	□	■
Press once again	<Stop>	□	□

i. INVERTER SYSTEM CONTROL

Refer to C-228 for MUZ-A12YV(H) and C-243 for MUZ-A18/A24YV.

j.OPERATIONAL FREQUENCY CONTROL OF OUTDOOR UNIT

Refer to C-230 for MUZ-A12YV(H) and C-244 for MUZ-A18/A24YV.

k. EXPANTION VALVE CONTROL (LEV CONTROL)

Refer to C-231 for MUZ-A12YV(H) and C-245 for MUZ-A18/A24YV.