Back to Index page

A.4 CEILING-CONCEALED (PEAD)

A.4.1 FEATURES A-144
A.4.2 SPECIFICATIONS A-145
A.4.3 OUTLINES AND DIMENSIONS A-149
A.4.4 WIRING DIAGRAM A-151
A.4.5 REFRIGERANT SYSTEM DIAGRAM A-153
A.4.6 PERFORMANCE DATA A-154
A.4.6.1 PERFORMANCE DATA A-154
A.4.6.2 PERFORMANCE CURVE A-165
A.4.7 FAN PERFORMANCE AND CORRECTED AIR FLOW A-166
A.4.8 NOISE CRITERIA CURVES A-172
A.4.9 REMOTE CONTROLLER A-174
A.4.10 TROUBLESHOOTING A-176
A.4.11 INSTALLATION PROCEDURE A-177
A.4.12 SAFETY DEVICE SETTINGS A-187

A.4.1 FEATURES

●PEAD-RP2.5/RP3/RP4GA

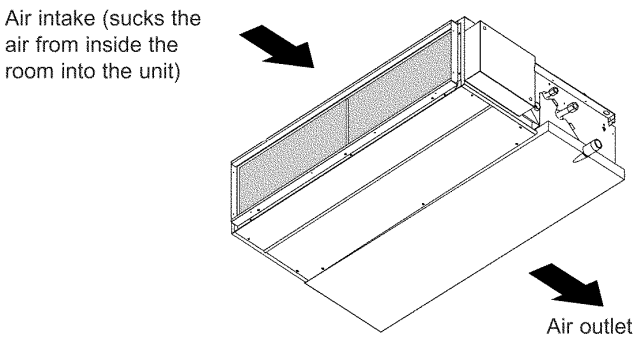

●PEAD-RP1.6/RP2/RP2.5/RP3/RP4/RP5/RP6EA

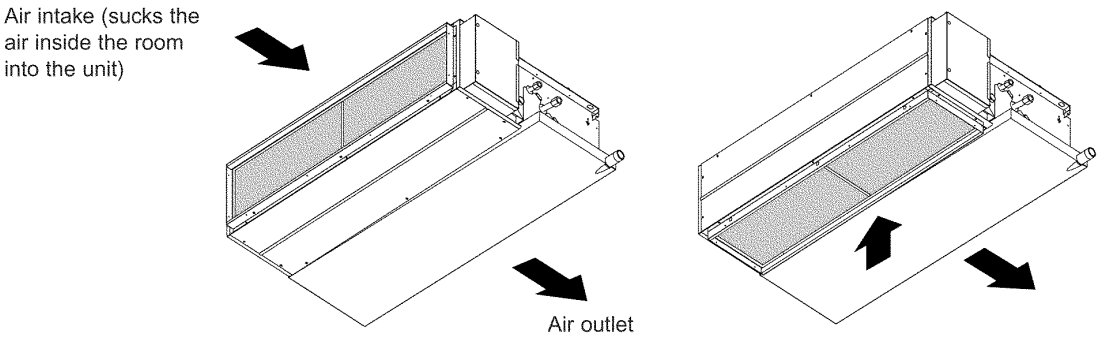

① In case of rear inlet

② In case of bottom inlet (Only 1.6~2.5HP)

These flexible, Ceiling Concealed models enhance interior aesthetics and provide all the benefits of split-type models.

PEAD-RP2.5/ 3/ 4GA: Only 275mm height

1 Fresh air intake

For fresh air intake at air temperatures down to minus 10 degrees, use the part.
(Heat-insulating materials set: PAC-SK10DK)

2 Direct air flow (low static pressure) compatible.

3 Expanded service space Flexibility

- ●Drain pan reversible installation (right or left side)
- ●Control box reversible installation (right or left side, optional part wiring attachment: PAC-SK02EC)
- ●Filter can be removed from bottom side.

PEAD-RP1.6/ 2/ 2.5/ 3/ 4/ 5/ 6EA

1 High External Static pressure

An external static pressure of 70Pa allows long dusts to be used extensively, enabling indoor units to be positioned optimal locations.

2 Extermely Versatile Installation

Air intake and air outlet vents can be positioned in the spots that provide optimum levels of comfort and efficiency for any particular application. This is because the distances between vents can be varied in ways that best fit the specifications and contours of the place to be air conditioned.

A.4.2 SPECIFICATIONS

Item / Service Ref.				PEAD-RP1.6EA		PEAD-RP2EA	
Function				Cooling	Heating	Cooling	Heating
Capacity			Btu/h	12,200	13,900	16,700	20,400
			W	3,600(1,600~4,500)	4,100(1,600~5,200)	4,900(2,300~5,600)	6,000(2,500~7,800)
Total input			kW	1,12	1.26	1.52	1.65
INDOOR UNIT	**Service Ref.**			**PEAD-RP1.6EA**		**PEAD-RP2EA**	
	Power supply			Single phase, 50Hz, 220-230-240V			
		Input	kW	0.13	0.13	0.14	0.14
		Running current	A	0.55	0.55	0.61	0.61
		Starting current	A	0.8	0.8	0.9	0.9
	External finish			Galvanized sheets			
	Heat exchanger			Plate fin coil			
	Fan	Fan(drive) x No.		Centrifugal (direct) x 2			
		Fan motor output	kW	0.043		0.076	
		Airflow(Lo-Hi)	m³/min(CFM)	11-14(388-494)		13.5-17(476-600)	
		External static pressure	Pa	30(70)			
	Booster heater		kW	-			
	Operation control & Thermostat			Built in remote controller			
	Noise level(Lo-Hi)		dB	34-38(70Pa: 36-43)		36-40(70Pa: 38-44)	
	Unit drain pipe O.D.		mm(in.)	R1(External thread)			
	Dimensions	W	mm(in.)	935(36-13/16)			
		D	mm(in.)	700(27-5/8)			
		H	mm(in.)	295(11-5/8)			
	Weight		kg(lbs)	33(73)		35(77)	
OUTDOOR UNIT	**Service Ref.**			**PUHZ-RP1.6VHA**		**PUHZ-RP2VHA**	

Item / Service Ref.				PEAD-RP2.5EA	
Function				Cooling	Heating
Capacity			Btu/h	20,400	23,800
			W	6,000(2,700~6,700)	7,000(2,800~8,200)
Total input			kW	1.86	1.90
INDOOR UNIT	**Service Ref.**			**PEAD-RP2.5EA**	
	Power supply			Single phase, 50Hz, 220-230-240V	
		Input	kW	0.16	0.16
		Running current	A	0.70	0.70
		Starting current	A	1.0	1.0
	External finish			Galvanized sheets	
	Heat exchanger			Plate fin coil	
	Fan	Fan(drive) x No.		Centrifugal (direct) x 2	
		Fan motor output	kW	0.116	
		Airflow(Lo-Hi)	m³/min(CFM)	17.21 (600-741)	
		External static pressure	Pa	30(70)	
		Booster heater	kW	-	
	Operation control & Thermostat			Built in remote controller	
	Noise level(Lo-Hi)		dB	37-41(70Pa: 39-46)	
	Unit drain pipe O.D.		mm(in.)	R1(External thread)	
	Dimensions	W	mm(in.)	1,175(46-1/8)	
		D	mm(in.)	700(27-5/8)	
		H	mm(in.)	295(11-5/8)	
	Weight		kg(lbs)	42(92)	
OUTDOOR UNIT	**Service Ref.**			**PUHZ-RP2.5VHA**	

Notes1. Rating Conditions (ISO 13253 T1)
Cooling : Indoor : D.B. 27˚C(80˚F), W.B. 19˚C (66˚F)
Outdoor : D.B. 35˚C(95˚F), W.B. 24˚C (75˚F)
Heating : Indoor : D.B. 20˚C(68˚F)
Outdoor : D.B. 7˚C(45˚F), W.B. 6˚C (43˚F)
Refrigerant piping length (one way) : 5m (16ft)

3. Guaranteed voltage
198~264V, 50Hz

4. Above data based on indicated voltage
Indoor Unit Single phase 230V 50Hz
Outdoor Unit Single phase 230V 50Hz

2. Guaranteed operating range

		Indoor	Outdoor
Cooling	Upper limit	D.B. 35˚C, W.B. 22.5˚C	D.B. 46˚C
	Lower limit	D.B. 19˚C, W.B. 15˚C	D.B. -5˚C
Heating	Upper limit	D.B. 28˚C	D.B. 21˚C, W.B. 15˚C
	Lower limit	D.B. 17˚C	D.B. -11˚C, W.B. -12˚C

5. Refer to the data book of outdoor unit for the outdoor unit's specifications.

Item / Service Ref.				PEAD-RP3EA		PEAD-RP4EA	
Function				Cooling	Heating	Cooling	Heating
Capacity			Btu/h	24,200	27,300	34,100	38,200
			W	7,100(3,300~8,100)	8,000(3,500~10,200)	10,000(4,900~11,400)	11,200(4,500~14,000)
Total input			kW	2.15	2.34	3.08	3.48
INDOOR UNIT	**Service Ref.**			**PEAD-RP3EA**		**PEAD-RP4EA**	
	Power supply			Single phase, 50Hz, 220-230-240V			
		Input	kW	0.35	0.35	0.57	0.57
		Running current	A	1.55	1.55	2.53	2.53
		Starting current	A	2.0	2.0	3.2	3.2
	External finish			Galvanized sheets			
	Heat exchanger			Plate fin coil			
	Fan	Fan(drive) x No.		Centrifugal (direct) x 2			
		Fan motor output	kW	0.15		0.24	
		Airflow(Lo-Hi)	m³/min(CFM)	20-25(706-883)		27-34(953-1,200)	
		External static pressure	Pa	70(130)			
	Booster heater		kW	-			
	Operation control & Thermostat			Built in remote controller			
	Noise level(Lo-Hi)		dB	37-41(130Pa: 40-45)		41-46(130Pa: 42-48)	
	Unit drain pipe O.D.		mm(in.)	R1 (External thread)			
	Dimensions	W	mm(in.)	1,175(46/1/8)		1,415(55-11/16)	
		D	mm(in.)	700(27-5/8)			
		H	mm(in.)	295(11-5/8)			
	Weight		kg(lbs)	44(97)		62(136)	
OUTDOOR UNIT	**Service Ref.**			**PUHZ-RP3VHA**		**PUHZ-RP4VHA**	

Item / Service Ref.				PEAD-RP5EA		PEAD-RP6EA	
Function				Cooling	Heating	Cooling	Heating
Capacity			Btu/h	42,600	47,700	47,700	54,500
			W	12,500(5,500~14,000)	14,000(5.000~16,000)	14,000(5,500~15.300)	16,000(5,000~18,000)
Total input			kW	3.69	4.11	4.91	4.76
INDOOR UNIT	**Service Ref.**			**PEAD-RP5EA**		**PEAD-RP6EA**	
	Power supply			Single phase, 50Hz, 220-230-240V			
		Input	kW	0.59	0.59	0.61	0.61
		Running current	A	2.62	2.62	2.69	2.69
		Starting current	A	3.4	3.4	3.5	3.5
	External finish			Galvanized sheets			
	Heat exchanger			Plate fin coil			
	Fan	Fan(drive) x No.		Centrifugal (direct) x 2			
		Fan motor output	kW	0.27			
		Airflow(Lo-Hi)	m³/min(CFM)	33.5-42 (1,183-1,483)		36.5-46 (1,288-1,624)	
		External static pressure	Pa	70(130)			
		Booster heater	kW	-			
	Operation control & Thermostat			Built in remote controller			
	Noise level(Lo-Hi)		dB	44-50 (130Pa: 46-52)		46-51(130Pa: 47-53)	
	Unit drain pipe O.D.		mm(in.)	R1(External thread)			
	Dimensions	W	mm(in.)	1,415(55-11/16)		1,715(67-1/2)	
		D	mm(in.)	740 (29-1/8)			
		H	mm(in.)	325(12-13/16)			
	Weight		kg(lbs)	65(143)		70(154)	
OUTDOOR UNIT	**Service Ref.**			**PUHZ-RP5VHA**		**PUH-RP6VHA**	

Notes1. Rating Conditions (ISO 13253 T1)
Cooling : Indoor : D.B. 27˚C(80˚F), W.B. 19˚C (66˚F)
Outdoor : D.B. 35˚C(95˚F), W.B. 24˚C (75˚F)
Heating : Indoor : D.B. 20˚C(68˚F)
Outdoor : D.B. 7˚C(45˚F), W.B. 6˚C (43˚F)
Refrigerant piping length (one way) : 5m (16ft)

3. Guaranteed voltage
198~264V, 50Hz

4. Above data based on indicated voltage
Indoor Unit Single phase 230V 50Hz
Outdoor Unit Single phase 230V 50Hz

2. Guaranteed operating range

		Indoor	Outdoor
Cooling	Upper limit	D.B. 35˚C, W.B. 22.5˚C	D.B. 46˚C
	Lower limit	D.B. 19˚C, W.B. 15˚C	D.B. -5˚C
Heating	Upper limit	D.B. 28˚C	D.B. 21˚C, W.B. 15˚C
	Lower limit	D.B. 17˚C	D.B. -11˚C, W.B. -12˚C

5. Refer to the data book of outdoor unit for the outdoor unit's specifications.

Item \ Service Ref.				PEAD-RP2.5GA	
Function				Cooling	Heating
Capacity			Btu/h	20,400	23,600
			W	6,000(2,700~6,700)	7,000(2,800~8,200)
Total input			kW	1.68	1.77
INDOOR UNIT	**Service Ref.**			**PEAD-RP2.5GA**	
	Power supply			Single phase, 50Hz, 220-230-240V	
		Input	kW	0.18	
		Running current	A	0.80	
		Starting current	A	1.03	
	External finish			Galvanized sheets	
	Heat exchanger			Plate fin coil	
	Fan	Fan(drive) x No.		Centrifugal (direct) x 2	
		Fan motor output	kW	0.10	
		Airflow(Lo-Hi)	m³/min(CFM)	16.5-21<582-741> ※ 16-20<565-706> at 220V/5Pa, 230V/10Pa, 240V/20Pa	
		External static pressure	Pa	5/35/50Pa at 220V, 10/50/70Pa at 230V, 20/60/75Pa at 240V	
	Booster heater		kW	-	
	Operation control & Thermostat			Built in remote controller	
	Noise level(Lo-Hi)	dB(A)	5/35/50Pa at220V	32-36/33-39/34-41	
			10/50/70Pa at220V	33-37/35-40/36-42	
			20/60/75Pa at220V	35-39/37-42/37-43	
	Unit drain pipe O.D.		mm(in.)	32(1-1/4)	
	Dimensions	W	mm(in.)	1171(46-1/8)	
		D	mm(in.)	740(29-1/8)	
		H	mm(in.)	2758(10-13/16)	
	Weight		kg(lbs)	42(93)	
OUTDOOR UNIT	**Service Ref.**			**PUHZ-RP2.5VHA**	

Item \ Service Ref.				PEAD-RP3GA	
Function				Cooling	Heating
Capacity			Btu/h	24,200	27,300
			W	7,100(3,300~8,100)	8,000(3,500~10,200)
Total input			kW	2.15	2.34
INDOOR UNIT	**Service Ref.**			**PEAD-RP3GA**	
	Power supply			Single phase, 50Hz, 220-230-240V	
		Input	kW	0.21	
		Running current	A	0.94	
		Starting current	A	1.21	
	External finish			Galvanized sheets	
	Heat exchanger			Plate fin coil	
	Fan	Fan(drive) x No.		Centrifugal (direct) x 2	
		Fan motor output	kW	0.10	
		Airflow(Lo-Hi)	m³/min(CFM)	20-25<706-883> ※ 19-24<671-847> at 220V/5Pa, 230V/10Pa, 240V/20Pa	
		External static pressure	Pa	5/35/50Pa at 220V, 10/50/70Pa at 230V, 20/60/75Pa at 240V	
	Booster heater		kW	-	
	Operation control & Thermostat			Built in remote controller	
	Noise level(Lo-Hi)	dB(A)	5/35/50Pa at 220V	34-37/35-40/36-42	
			10/50/70Pa at 230V	35-38/37-41/37-43	
			20/60/75Pa at 240V	37-40/38-42/38-43	
	Unit drain pipe O.D.		mm(in.)	32(1-1/4)	
	Dimensions	W	mm(in.)	1171(46-1/8)	
		D	mm(in.)	740(29-1/8)	
		H	mm(in.)	275(10-13/16)	
	Weight		kg(lbs)	42(93)	
OUTDOOR UNIT	**Service Ref.**			**PUHZ-RP3VHA**	

Notes1. Rating Conditions (ISO 13253 T1)
Cooling : Indoor : D.B. 27˚C(80˚F), W.B. 19˚C (66˚F)
Outdoor : D.B. 35˚C(95˚F), W.B. 24˚C (75˚F)
Heating : Indoor : D.B. 20˚C(68˚F)
Outdoor : D.B. 7˚C(45˚F), W.B. 6˚C (43˚F)
Refrigerant piping length (one way) : 5m (16ft)

2. Guaranteed operating range

		Indoor	Outdoor
Cooling	Upper limit	D.B. 35˚C, W.B. 22.5˚C	D.B. 46˚C
	Lower limit	D.B. 19˚C, W.B. 15˚C	D.B. -5˚C
Heating	Upper limit	D.B. 28˚C	D.B. 21˚C, W.B. 15˚C
	Lower limit	D.B. 17˚C	D.B. -11˚C, W.B. -12˚C

3. Guaranteed voltage
198~264V, 50Hz

4. Above data based on indicated voltage
Indoor Unit Single phase 230V 50Hz
Outdoor Unit Single phase 230V 50Hz

5. Refer to the data book of outdoor unit for the outdoor unit's specifications.

Item \ Service Ref.				PEAD-RP4GA	
Function				Cooling	Heating
Capacity			Btu/h	34,100	38,200
			W	10,000(4,900~11,400)	11,200(4,500~14,000)
Total input			kW	3.08	3.48
INDOOR UNIT	**Service Ref.**			**PEAD-RP4GA**	
	Power supply			Single phase, 50Hz, 220-230-240V	
		Input	kW	0.28	
		Running current	A	1.25	
		Starting current	A	1.61	
	External finish			Galvanized sheets	
	Heat exchanger			Plate fin coil	
	Fan	Fan(drive) x No.		Centrifugal (direct) x 2	
		Fan motor output	kW	0.16	
		Airflow(Lo-Hi)	m³/min(CFM)	26.5-33<935-1165> ※ 25.5-32<900-1130> at 220V/5Pa, 230V/10Pa, 240V/20Pa	
		External static pressure	Pa	5/35/50Pa at 220V, 10/50/70Pa at 230V, 20/60/75Pa at 240V	
	Booster heater		kW	-	
	Operation control & Thermostat			Built in remote controller	
	Noise level(Lo-Hi)	dB(A)	5/35/50Pa at 220V	38-42/45-40/40-46	
			10/50/70Pa at 230V	40-43/42-45/42-46	
			20/60/75Pa at 240V	42-45/43-46/43-47	
	Unit drain pipe O.D.		mm(in.)	32(1-1/4)	
	Dimensions	W	mm(in.)	1411(55-9/16)	
		D	mm(in.)	740(29-1/8)	
		H	mm(in.)	275(10-13/16)	
	Weight		kg(lbs)	50(111)	
OUTDOOR UNIT	**Service Ref.**			**PUHZ-RP4VHA**	

Notes1. Rating Conditions (ISO 13253 T1)
Cooling : Indoor : D.B. 27˚C(80˚F), W.B. 19˚C (66˚F)
Outdoor : D.B. 35˚C(95˚F), W.B. 24˚C (75˚F)
Heating : Indoor : D.B. 20˚C(68˚F)
Outdoor : D.B. 7˚C(45˚F), W.B. 6˚C (43˚F)
Refrigerant piping length (one way) : 5m (16ft)

3. Guaranteed voltage
198~264V, 50Hz

4. Above data based on indicated voltage
Indoor Unit Single phase 230V 50Hz
Outdoor Unit Single phase 230V 50Hz

2. Guaranteed operating range

		Indoor	Outdoor
Cooling	Upper limit	D.B. 35˚C, W.B. 22.5˚C	D.B. 46˚C
	Lower limit	D.B. 19˚C, W.B. 15˚C	D.B. -5˚C
Heating	Upper limit	D.B. 28˚C	D.B. 21˚C, W.B. 15˚C
	Lower limit	D.B. 17˚C	D.B. -11˚C, W.B. -12˚C

5. Refer to the data book of outdoor unit for the outdoor unit's specifications.

A.4.3 OUTLINES AND DIMENSIONS

A.4.3.1 INDOOR UNIT

PEAD-RP1.6EA
PEAD-RP2EA
PEAD-RP2.5EA

Model	A	B	C	D	E	F	G
RP1.6,2	772	305	–	830	804	FOR PUHZ-RP TYPE:6.35 FOR PU(H)-P TYPE:9.52	FOR PUHZ-RP TYPE:12.7 FOR PU(H)-P TYPE:15.88
RP2.5	1012	280	290	1070	1044	9.52	15.88

① Refrigerant piping flare connection (liquid F copper tube):HP
② Refrigerant piping flare connection (gas G copper tube):LP
③ Drain R1(External thread)
④ Electrical parts box
⑤ Drain Pump (Option)
⑥ Drain Pipe (Option) ··· Flexible joint VP-25(I.D. ø32) } Set
⑦ Filter

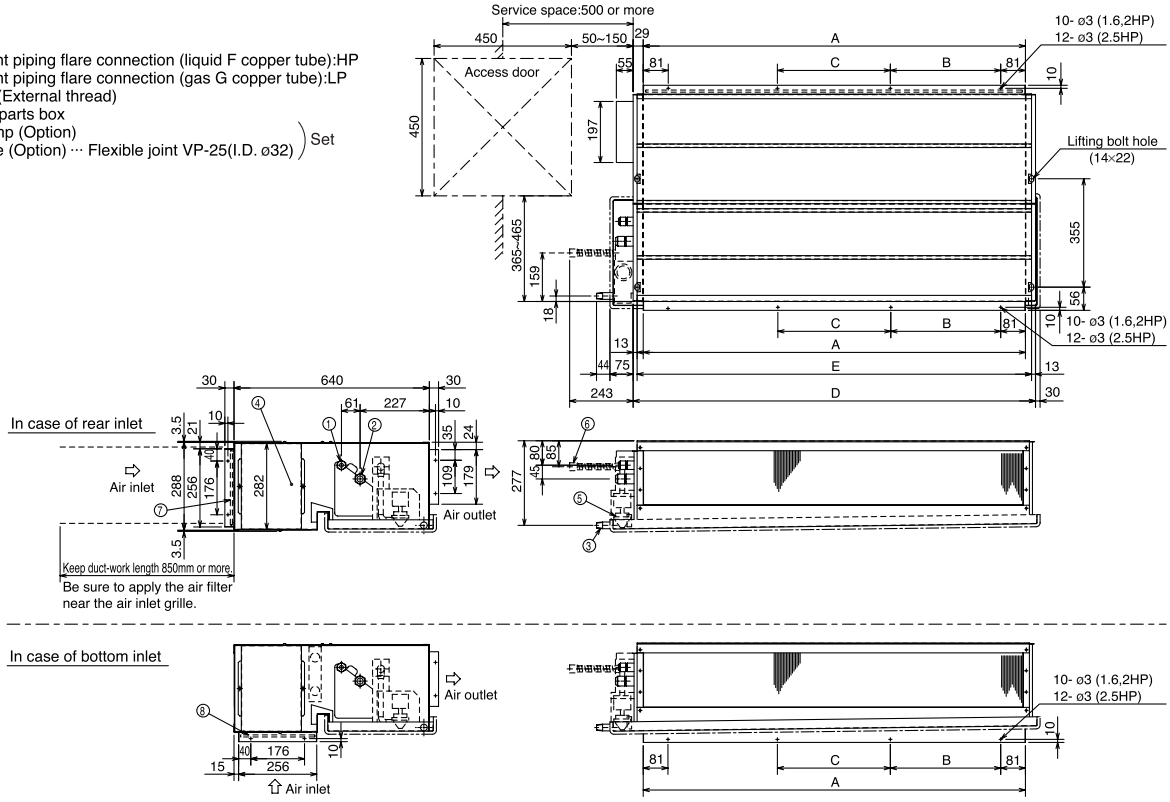

PEAD-RP3EA
PEAD-RP4EA
PEAD-RP5EA
PEAD-RP6EA

Model	A	B	C	D	E	F
RP3	1012	280	290	1070	1044	15.88
RP4·5	1252	360	370	1310	1284	FOR PUHZ-RP TYPE:15.88
RP6	1552	460	470	1610	1584	FOR PU(H)-P TYPE:19.05

① Refrigerant piping flare connection (liquid ø9.52 copper tube):HP
② Refrigerant piping flare connection (gas øF copper tube):LP
③ Drain R1 (External thread)
④ Electrical parts box
⑤ Drain Pump (Option)
⑥ Drain Pipe (Option) ··· Flexible joint VP25(I.D.ø32) } Set
⑦ Filter

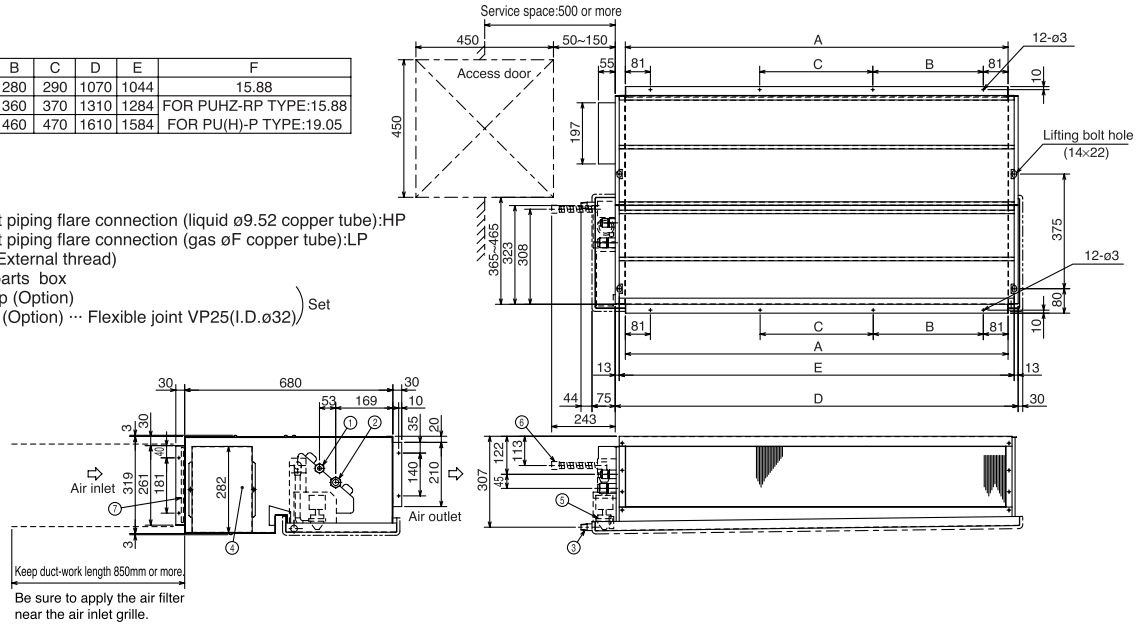

PEAD-RP2.5GA
PEAD-RP3GA
PEAD-RP4GA

① Refrigerant piping flare connection(liquid ø9.52 copper tube): HP
② Refrigerant piping flare connection(gas øH copper tube): LP
③ Electrical parts box ✻
④ Terminal bed : Power source ✻;Fixable to opposition side.
⑤ Terminal bed : Remote control
⑥ Filter
⑦ Drain pan (R1 External thread: ø34) ✻

Model	A	B	C	D	E	F	G	H
PEAD-RP2.5,3GA	1125	1090	1050	1012	7	840	8	15.88
PEAD-RP4GA	1365	1330	1290	1252	9	1080	10	R410A Outdoor unit;15.88 R407C Outdoor unit;19.05

✻ NOTE: IT IS NECESSARY TO REMOVE THE CEILING PARTS OR TO KEEP THE MAINTENANCE HOLE OF OVER UNIT SIZE WHEN YOU HAVE A MAINTENANCE OR SERVICE THE FOLLOWING PARTS.
SERVICE: MOTOR,SIROCCO FAN,HEAT EXCHANGER,DRAIN PAN
(EXCHANGE) FILTER(IN CASE OF INDOOR UNIT HAVE INLET DUCT.)
MAINTENANCE: HEAT EXCHANGER,DRAIN PAN(SURFACE WASHING)
(WASHING) FILTER(IN CASE OF INDOOR UNIT HAVE INLET DUCT.)

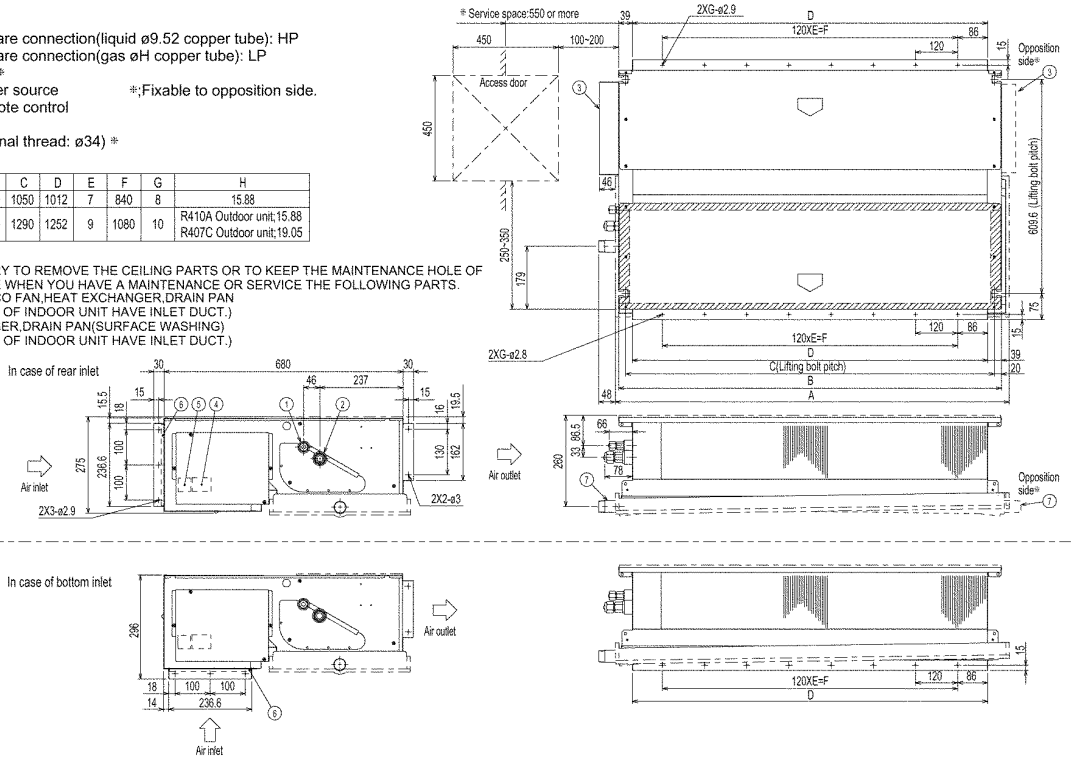

A.4.3.2 REMOTE CONTROLLER

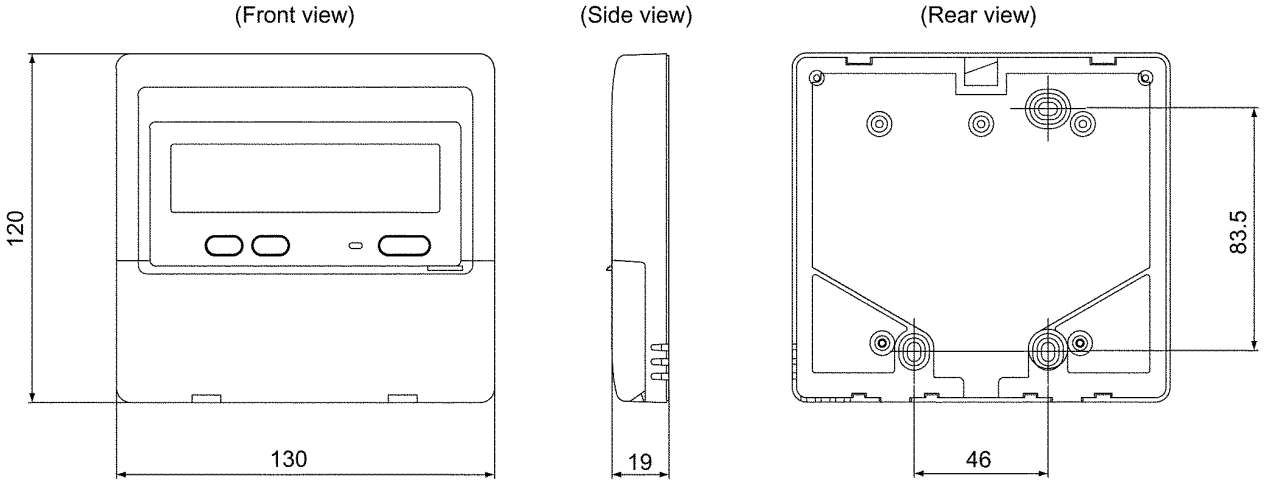

A.4.4 WIRING DIAGRAM

PEAD-RP1.6EA
PEAD-RP2EA
PEAD-RP2.5EA
PEAD-RP3EA
PEAD-RP4EA
PEAD-RP5EA
PEAD-RP6EA

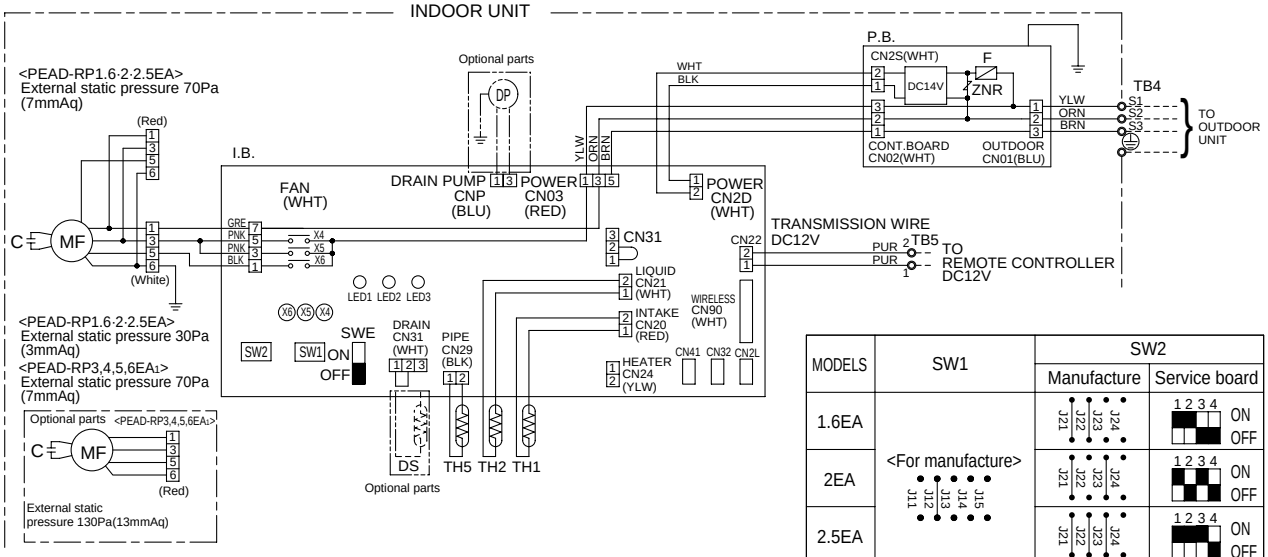

MODELS	SW1	SW2 Manufacture	SW2 Service board
1.6EA	<For manufacture> J11 J12 J13 J14 J15 / <For service board> 1 2 3 4 5 ON OFF	J21 J22 J23 J24	1 2 3 4 ON OFF
2EA		J21 J22 J23 J24	1 2 3 4 ON OFF
2.5EA		J21 J22 J23 J24	1 2 3 4 ON OFF
3EA		J21 J22 J23 J24	1 2 3 4 ON OFF
4EA		J21 J22 J23 J24	1 2 3 4 ON OFF
5EA		J21 J22 J23 J24	1 2 3 4 ON OFF
6EA		J21 J22 J23 J24	1 2 3 4 ON OFF

SYMBOL	NAME	SYMBOL	NAME	SYMBOL	NAME
I.B.	INDOOR CONTROLLER BOARD	P.B.	INDOOR POWER BOARD	C	CAPACITOR(FAN MOTOR)
CN2L	CONNECTOR(LOSSNAY)	F1	FUSE(4A)	MF	FAN MOTOR
CN32	CONNECTOR(REMOTE SWITCH)	ZNR	VARISTOR	TB5	TERMINAL BLOCK(REMOTE CONTROLLER)
CN41	CONNECTOR(HA TERMINAL-A)			TB4	TERMINAL BLOCK (INDOOR/OUTDOOR CONNECTING LINE)
LED1	POWER SUPPLY(I.B.)	DRAIN PUMP	(OPTIONAL PARTS)		
LED2	POWER SUPPLY(REMOTE CONTROLLER)	DP	DRAIN PUMP	TH1	ROOM TEMPERATURE THERMISTOR (0°C/15KΩ, 25°C/5.4KΩ DETECT)
LED3	TRANSMISSION(INDOOR·OUTDOOR)	DS	DRAIN SENSOR		
SW1	JUMPER WIRE(MODEL SELECTION)			TH2	PIPE TEMPERATURE THERMISTOR/LIQUID (0°C/15KΩ, 25°C/5.4KΩ DETECT)
SW2	JUMPER WIRE(CAPACITY CORD)				
SWE	SWITCH(EMERGENCY OPERATION)			TH5	COND./EVA. TEMPERATURE THERMISTOR (0°C/15KΩ, 25°C/5.4KΩ DETECT)
X4	RELAY(FAN MOTOR)				
X5	RELAY(FAN MOTOR)				
X6	RELAY(FAN MOTOR)				

PEAD-RP2.5GA
PEAD-RP3GA
PEAD-RP4GA

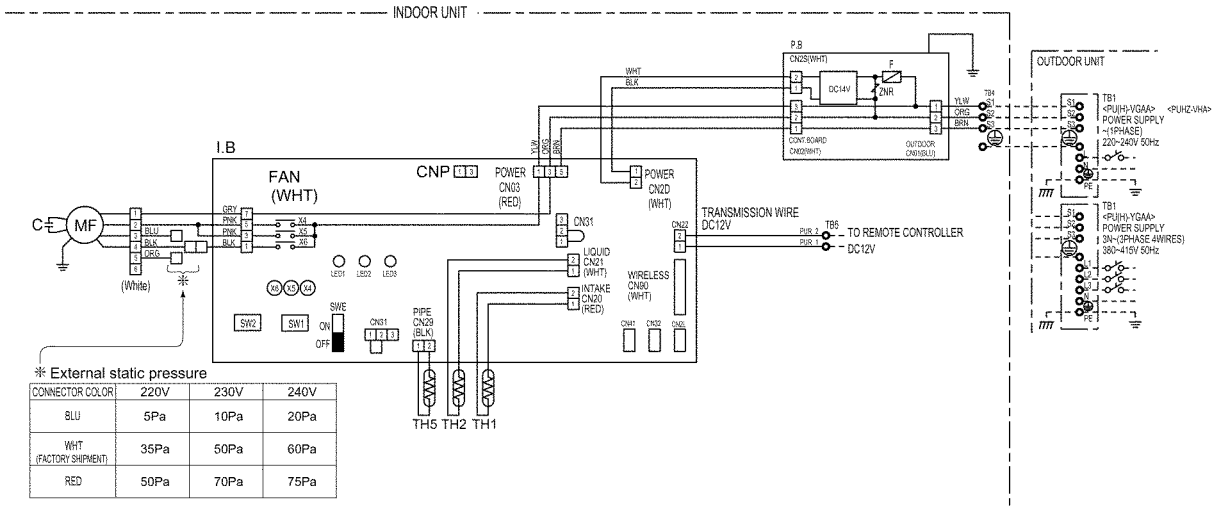

※ External static pressure

CONNECTOR COLOR	220V	230V	240V
BLU	5Pa	10Pa	20Pa
WHT (FACTORY SHIPMENT)	35Pa	50Pa	60Pa
RED	50Pa	70Pa	75Pa

SYMBOL	NAME	SYMBOL	NAME	SYMBOL	NAME
I.B	INDOOR CONTROLLER BOARD	P.B	INDOOR POWER BOARD	C	CAPACITOR(FAN MOTOR)
CN2L	CONNECTOR(LOSSNAY)	F1	FUSE(4A)	MF	FAN MOTOR
CN32	CONNECTOR(REMOTE SWITCH)	ZNR	VARISTOR	TB5	TERMINAL BLOCK(REMOTE CONTROLLER)
CN41	CONNECTOR(HA TERMINAL-A)			TB4	TERMINAL BLOCK (INDOOR/OUTDOOR CONNECTING LINE)
LED1	POWER SUPPLY(I.B)				
LED2	POWER SUPPLY(REMOTE CONTROLLER)			TH1	ROOM TEMPERATURE THERMISTOR (0°C/15KΩ,25°C/5.4KΩ DETECT)
LED3	TRANSMISSION(INDOOR-OUTDOOR)				
SW1	JUMPER WIRE(MODEL SELECTION)			TH2	PIPE TEMPERATURE THERMISTOR/LIQUID (0°C/15KΩ,25°C/5.4KΩ DETECT)
SW2	JUMPER WIRE(CAPACITY CORD)				
SWE	SWITCH(EMERGENCY OPERATION)			TH5	COND./EVA. TEMPERATURE THERMISTOR (0°C/15KΩ,25°C/5.4KΩ DETECT)
X4	RELAY(FAN MOTOR)				
X5	RELAY(FAN MOTOR)				
X6	RELAY(FAN MOTOR)				

MODELS	SW1	SW2	
		Manufacture	Service board
2.5GA	<For manufacture>		1 2 3 4 ON OFF
3GA	<For service board>		1 2 3 4 ON OFF
4GA	1 2 3 4 5 ON OFF		1 2 3 4 ON OFF

A.4.5 REFRIGERANT SYSTEM DIAGRAM

PEAD-RP1.6EA
PEAD-RP2EA
PEAD-RP2.5EA
PEAD-RP3EA
PEAD-RP4EA
PEAD-RP5EA
PEAD-RP6EA
PEAD-RP2.5GA
PEAD-RP3GA
PEAD-RP4GA

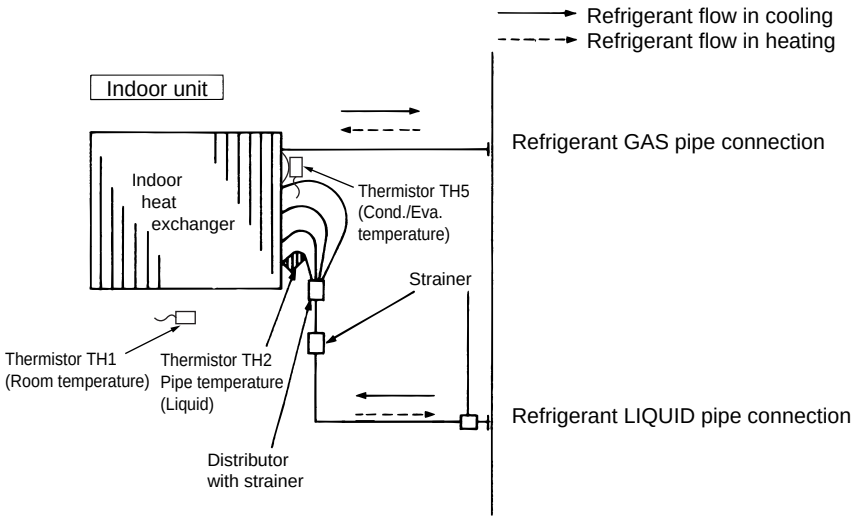

A.4.6 PERFORMANCE DATA

A.4.6.1 PERFORMANCE DATA

PEAD-RP・EA

1) COOLING CAPACITY
PEAD-RP1.6EA/PUHZ-RP1.6VHA

(230V)

Indoor Intake air D.B. (°C)	Indoor Intake air W.B. (°C)	Outdoor intake air D.B. (°C) 20				25				30			
		CA	SHC(W)	SHF	P.C.	CA	SHC(W)	SHF	P.C.	CA	SHC(W)	SHF	P.C.
20	16	3564	2245	0.63	0.90	3456	2177	0.63	0.95	3348	2109	0.63	1.00
	18	3816	1946	0.51	0.91	3708	1891	0.51	0.96	3582	1827	0.51	1.03
	20	4104	1601	0.39	0.94	4014	1565	0.39	0.99	3906	1523	0.39	1.05
22	16	3564	2530	0.71	0.90	3456	2454	0.71	0.95	3348	2377	0.71	1.00
	18	3816	2251	0.59	0.91	3708	2188	0.59	0.96	3582	2113	0.59	1.03
	20	4104	1929	0.47	0.94	4014	1887	0.47	0.99	3906	1836	0.47	1.05
24	16	3564	2816	0.79	0.90	3456	2730	0.79	0.95	3348	2645	0.79	1.00
	18	3816	2557	0.67	0.91	3708	2484	0.67	0.96	3582	2400	0.67	1.03
	20	4104	2257	0.55	0.94	4014	2208	0.55	0.99	3906	2148	0.55	1.05
	22	4374	1881	0.43	0.96	4284	1842	0.43	1.02	4176	1796	0.43	1.09
26	16	3564	3101	0.87	0.90	3456	3007	0.87	0.95	3348	2913	0.87	1.00
	18	3816	2862	0.75	0.91	3708	2781	0.75	0.96	3582	2687	0.75	1.03
	20	4104	2586	0.63	0.94	4014	2529	0.63	0.99	3906	2461	0.63	1.05
	22	4374	2231	0.51	0.96	4284	2185	0.51	1.02	4176	2130	0.51	1.09
27	16	3564	3243	0.91	0.90	3456	3145	0.91	0.95	3348	3047	0.91	1.00
	18	3816	3015	0.79	0.91	3708	2929	0.79	0.96	3582	2830	0.79	1.03
	20	4104	2750	0.67	0.94	4014	2689	0.67	0.99	3906	2617	0.67	1.05
	22	4374	2406	0.55	0.96	4284	2356	0.55	1.02	4176	2297	0.55	1.09
28	16	3564	3386	0.95	0.90	3456	3283	0.95	0.95	3348	3181	0.95	1.00
	18	3816	3167	0.83	0.91	3708	3078	0.83	0.96	3582	2973	0.83	1.03
	20	4104	2914	0.71	0.94	4014	2850	0.71	0.99	3906	2773	0.71	1.05
	22	4374	2581	0.59	0.96	4284	2528	0.59	1.02	4176	2464	0.59	1.09
30	16	3564	3564	1.00	0.90	3456	3456	1.00	0.95	3348	3348	1.00	1.00
	18	3816	3473	0.91	0.91	3708	3374	0.91	0.96	3582	3260	0.91	1.03
	20	4104	3242	0.79	0.94	4014	3171	0.79	0.99	3906	3086	0.79	1.05
	22	4374	2931	0.67	0.96	4284	2870	0.67	1.02	4176	2798	0.67	1.09
32	16	3564	3564	1.00	0.90	3456	3456	1.00	0.95	3348	3348	1.00	1.00
	18	3816	3778	0.99	0.91	3708	3671	0.99	0.96	3582	3546	0.99	1.03
	20	4104	3570	0.87	0.94	4014	3492	0.87	0.99	3906	3398	0.87	1.05
	22	4374	3281	0.75	0.96	4284	3213	0.75	1.02	4176	3132	0.75	1.09
34	16	3564	3564	1.00	0.90	3456	3456	1.00	0.95	3348	3348	1.00	1.00
	18	3816	3816	1.00	0.91	3708	3708	1.00	0.96	3582	3582	1.00	1.03
	20	4104	3899	0.95	0.94	4014	3813	0.95	0.99	3906	3711	0.95	1.05
	22	4374	3630	0.83	0.96	4284	3556	0.83	1.02	4176	3466	0.83	1.09

Indoor Intake air D.B. (°C)	Indoor Intake air W.B. (°C)	Outdoor intake air D.B. (°C) 35				40				45			
		CA	SHC(W)	SHF	P.C.	CA	SHC(W)	SHF	P.C.	CA	SHC(W)	SHF	P.C.
20	16	3204	2019	0.63	1.08	3060	1928	0.63	1.15	2916	1837	0.63	1.25
	18	3456	1763	0.51	1.10	3348	1707	0.51	1.19	3132	1597	0.51	1.28
	20	3744	1460	0.39	1.13	3600	1404	0.39	1.21	3384	1320	0.39	1.30
22	16	3204	2275	0.71	1.08	3060	2173	0.71	1.15	2916	2070	0.71	1.25
	18	3456	2039	0.59	1.10	3348	1975	0.59	1.19	3132	1848	0.59	1.28
	20	3744	1760	0.47	1.13	3600	1692	0.47	1.21	3384	1590	0.47	1.30
24	16	3204	2531	0.79	1.08	3060	2417	0.79	1.15	2916	2304	0.79	1.25
	18	3456	2316	0.67	1.10	3348	2243	0.67	1.19	3132	2098	0.67	1.28
	20	3744	2059	0.55	1.13	3600	1980	0.55	1.21	3384	1861	0.55	1.30
	22	4032	1734	0.43	1.15	3888	1672	0.43	1.24	3672	1579	0.43	1.32
26	16	3204	2787	0.87	1.08	3060	2662	0.87	1.15	2916	2537	0.87	1.25
	18	3456	2592	0.75	1.10	3348	2511	0.75	1.19	3132	2349	0.75	1.28
	20	3744	2359	0.63	1.13	3600	2268	0.63	1.21	3384	2132	0.63	1.30
	22	4032	2056	0.51	1.15	3888	1983	0.51	1.24	3672	1873	0.51	1.32
27	16	3204	2916	0.91	1.08	3060	2785	0.91	1.15	2916	2654	0.91	1.25
	18	3456	2730	0.79	1.10	3348	2645	0.79	1.19	3132	2474	0.79	1.28
	20	3744	2508	0.67	1.13	3600	2412	0.67	1.21	3384	2267	0.67	1.30
	22	4032	2218	0.55	1.15	3888	2138	0.55	1.24	3672	2020	0.55	1.32
28	16	3204	3044	0.95	1.08	3060	2907	0.95	1.15	2916	2770	0.95	1.25
	18	3456	2868	0.83	1.10	3348	2779	0.83	1.19	3132	2600	0.83	1.28
	20	3744	2658	0.71	1.13	3600	2556	0.71	1.21	3384	2403	0.71	1.30
	22	4032	2379	0.59	1.15	3888	2294	0.59	1.24	3672	2166	0.59	1.32
30	16	3204	3204	1.00	1.08	3060	3060	1.00	1.15	2916	2916	1.00	1.25
	18	3456	3145	0.91	1.10	3348	3047	0.91	1.19	3132	2850	0.91	1.28
	20	3744	2958	0.79	1.13	3600	2844	0.79	1.21	3384	2673	0.79	1.30
	22	4032	2701	0.67	1.15	3888	2605	0.67	1.24	3672	2460	0.67	1.32
32	16	3204	3204	1.00	1.08	3060	3060	1.00	1.15	2916	2916	1.00	1.25
	18	3456	3421	0.99	1.10	3348	3315	0.99	1.19	3132	3101	0.99	1.28
	20	3744	3257	0.87	1.13	3600	3132	0.87	1.21	3384	2944	0.87	1.30
	22	4032	3024	0.75	1.15	3888	2916	0.75	1.24	3672	2754	0.75	1.32
34	16	3204	3204	1.00	1.08	3060	3060	1.00	1.15	2916	2916	1.00	1.25
	18	3456	3456	1.00	1.10	3348	3348	1.00	1.19	3132	3132	1.00	1.28
	20	3744	3557	0.95	1.13	3600	3420	0.95	1.21	3384	3215	0.95	1.30
	22	4032	3347	0.83	1.15	3888	3227	0.83	1.24	3672	3048	0.83	1.32

Notes CA: Capacity (W) SHC: Sensible heat capacity (W)
P.C.: Power consumption (kW) SHF: Sensible heat factor

PEAD-RP2EA/PUHZ-RP2VHA

(230V)

Indoor Intake air D.B. (°C)	Indoor Intake air W.B. (°C)	Outdoor intake air D.B. (°C) 20				25				30			
		CA	SHC(W)	SHF	P.C.	CA	SHC(W)	SHF	P.C.	CA	SHC(W)	SHF	P.C.
20	16	4851	3105	0.64	1.22	4704	3011	0.64	1.28	4557	2916	0.64	1.36
	18	5194	2701	0.52	1.24	5047	2624	0.52	1.31	4876	2535	0.52	1.40
	20	5586	2234	0.40	1.28	5464	2185	0.40	1.34	5317	2127	0.40	1.43
22	16	4851	3493	0.72	1.22	4704	3387	0.72	1.28	4557	3281	0.72	1.36
	18	5194	3116	0.60	1.24	5047	3028	0.60	1.31	4876	2925	0.60	1.40
	20	5586	2681	0.48	1.28	5464	2622	0.48	1.34	5317	2552	0.48	1.43
24	16	4851	3881	0.80	1.22	4704	3763	0.80	1.28	4557	3646	0.80	1.36
	18	5194	3532	0.68	1.24	5047	3432	0.68	1.31	4876	3315	0.68	1.40
	20	5586	3128	0.56	1.28	5464	3060	0.56	1.34	5317	2977	0.56	1.43
	22	5954	2620	0.44	1.31	5831	2566	0.44	1.38	5684	2501	0.44	1.47
26	16	4851	4269	0.88	1.22	4704	4140	0.88	1.28	4557	4010	0.88	1.36
	18	5194	3947	0.76	1.24	5047	3836	0.76	1.31	4876	3705	0.76	1.40
	20	5586	3575	0.64	1.28	5464	3497	0.64	1.34	5317	3403	0.64	1.43
	22	5954	3096	0.52	1.31	5831	3032	0.52	1.38	5684	2956	0.52	1.47
27	16	4851	4463	0.92	1.22	4704	4328	0.92	1.28	4557	4192	0.92	1.36
	18	5194	4155	0.80	1.24	5047	4038	0.80	1.31	4876	3900	0.80	1.40
	20	5586	3798	0.68	1.28	5464	3715	0.68	1.34	5317	3615	0.68	1.43
	22	5954	3334	0.56	1.31	5831	3265	0.56	1.38	5684	3183	0.56	1.47
28	16	4851	4657	0.96	1.22	4704	4516	0.96	1.28	4557	4375	0.96	1.36
	18	5194	4363	0.84	1.24	5047	4239	0.84	1.31	4876	4095	0.84	1.40
	20	5586	4022	0.72	1.28	5464	3934	0.72	1.34	5317	3828	0.72	1.43
	22	5954	3572	0.60	1.31	5831	3499	0.60	1.38	5684	3410	0.60	1.47
30	16	4851	4851	1.00	1.22	4704	4704	1.00	1.28	4557	4557	1.00	1.36
	18	5194	4778	0.92	1.24	5047	4643	0.92	1.31	4876	4485	0.92	1.40
	20	5586	4469	0.80	1.28	5464	4371	0.80	1.34	5317	4253	0.80	1.43
	22	5954	4048	0.68	1.31	5831	3965	0.68	1.38	5684	3865	0.68	1.47
32	16	4851	4851	1.00	1.22	4704	4704	1.00	1.28	4557	4557	1.00	1.36
	18	5194	5194	1.00	1.24	5047	5047	1.00	1.31	4876	4876	1.00	1.40
	20	5586	4916	0.88	1.28	5464	4808	0.88	1.34	5317	4679	0.88	1.43
	22	5954	4525	0.76	1.31	5831	4432	0.76	1.38	5684	4320	0.76	1.47
34	16	4851	4851	1.00	1.22	4704	4704	1.00	1.28	4557	4557	1.00	1.36
	18	5194	5194	1.00	1.24	5047	5047	1.00	1.31	4876	4876	1.00	1.40
	20	5586	5363	0.96	1.28	5464	5245	0.96	1.34	5317	5104	0.96	1.43
	22	5954	5001	0.84	1.31	5831	4898	0.84	1.38	5684	4775	0.84	1.47

Indoor Intake air D.B. (°C)	Indoor Intake air W.B. (°C)	Outdoor intake air D.B. (°C) 35				40				45			
		CA	SHC(W)	SHF	P.C.	CA	SHC(W)	SHF	P.C.	CA	SHC(W)	SHF	P.C.
20	16	4361	2791	0.64	1.46	4165	2666	0.64	1.57	3969	2540	0.64	1.69
	18	4704	2446	0.52	1.50	4557	2370	0.52	1.61	4263	2217	0.52	1.73
	20	5096	2038	0.40	1.54	4900	1960	0.40	1.64	4606	1842	0.40	1.76
22	16	4361	3140	0.72	1.46	4165	2999	0.72	1.57	3969	2858	0.72	1.69
	18	4704	2822	0.60	1.50	4557	2734	0.60	1.61	4263	2558	0.60	1.73
	20	5096	2446	0.48	1.54	4900	2352	0.48	1.64	4606	2211	0.48	1.76
24	16	4361	3489	0.80	1.46	4165	3332	0.80	1.57	3969	3175	0.80	1.69
	18	4704	3199	0.68	1.50	4557	3099	0.68	1.61	4263	2899	0.68	1.73
	20	5096	2854	0.56	1.54	4900	2744	0.56	1.64	4606	2579	0.56	1.76
	22	5488	2415	0.44	1.57	5292	2328	0.44	1.69	4998	2199	0.44	1.79
26	16	4361	3838	0.88	1.46	4165	3665	0.88	1.57	3969	3493	0.88	1.69
	18	4704	3575	0.76	1.50	4557	3463	0.76	1.61	4263	3240	0.76	1.73
	20	5096	3261	0.64	1.54	4900	3136	0.64	1.64	4606	2948	0.64	1.76
	22	5488	2854	0.52	1.57	5292	2752	0.52	1.69	4998	2599	0.52	1.79
27	16	4361	4012	0.92	1.46	4165	3832	0.92	1.57	3969	3651	0.92	1.69
	18	4704	3763	0.80	1.50	4557	3646	0.80	1.61	4263	3410	0.80	1.73
	20	5096	3465	0.68	1.54	4900	3332	0.68	1.64	4606	3132	0.68	1.76
	22	5488	3073	0.56	1.57	5292	2964	0.56	1.69	4998	2799	0.56	1.79
28	16	4361	4187	0.96	1.46	4165	3998	0.96	1.57	3969	3810	0.96	1.69
	18	4704	3951	0.84	1.50	4557	3828	0.84	1.61	4263	3581	0.84	1.73
	20	5096	3669	0.72	1.54	4900	3528	0.72	1.64	4606	3316	0.72	1.76
	22	5488	3293	0.60	1.57	5292	3175	0.60	1.69	4998	2999	0.60	1.79
30	16	4361	4361	1.00	1.46	4165	4165	1.00	1.57	3969	3969	1.00	1.69
	18	4704	4328	0.92	1.50	4557	4192	0.92	1.61	4263	3922	0.92	1.73
	20	5096	4077	0.80	1.54	4900	3920	0.80	1.64	4606	3685	0.80	1.76
	22	5488	3732	0.68	1.57	5292	3599	0.68	1.69	4998	3399	0.68	1.79
32	16	4361	4361	1.00	1.46	4165	4165	1.00	1.57	3969	3969	1.00	1.69
	18	4704	4704	1.00	1.50	4557	4557	1.00	1.61	4263	4263	1.00	1.73
	20	5096	4484	0.88	1.54	4900	4312	0.88	1.64	4606	4053	0.88	1.76
	22	5488	4171	0.76	1.57	5292	4022	0.76	1.69	4998	3798	0.76	1.79
34	16	4361	4361	1.00	1.46	4165	4165	1.00	1.57	3969	3969	1.00	1.69
	18	4704	4704	1.00	1.50	4557	4557	1.00	1.61	4263	4263	1.00	1.73
	20	5096	4892	0.96	1.54	4900	4704	0.96	1.64	4606	4422	0.96	1.76
	22	5488	4610	0.84	1.57	5292	4445	0.84	1.69	4998	4198	0.84	1.79

Notes CA: Capacity (W) SHC: Sensible heat capacity (W)
P.C.: Power consumption (kW) SHF: Sensible heat factor

PEAD-RP2.5EA/PUHZ-RP2.5VHA (230V)

Indoor Intake air D.B. (°C)	Indoor Intake air W.B. (°C)	Outdoor intake air D.B. (°C) 20				25				30			
		CA	SHC(W)	SHF	P.C.	CA	SHC(W)	SHF	P.C.	CA	SHC(W)	SHF	P.C.
20	16	5940	3742	0.63	1.49	5760	3629	0.63	1.57	5580	3515	0.63	1.66
	18	6360	3244	0.51	1.52	6180	3152	0.51	1.60	5970	3045	0.51	1.71
	20	6840	2668	0.39	1.56	6690	2609	0.39	1.64	6510	2539	0.39	1.75
22	16	5940	4217	0.71	1.49	5760	4090	0.71	1.57	5580	3962	0.71	1.66
	18	6360	3752	0.59	1.52	6180	3646	0.59	1.60	5970	3522	0.59	1.71
	20	6840	3215	0.47	1.56	6690	3144	0.47	1.64	6510	3060	0.47	1.75
24	16	5940	4693	0.79	1.49	5760	4550	0.79	1.57	5580	4408	0.79	1.66
	18	6360	4261	0.67	1.52	6180	4141	0.67	1.60	5970	4000	0.67	1.71
	20	6840	3762	0.55	1.56	6690	3680	0.55	1.64	6510	3581	0.55	1.75
	22	7290	3135	0.43	1.60	7140	3070	0.43	1.69	6960	2993	0.43	1.80
26	16	5940	5168	0.87	1.49	5760	5011	0.87	1.57	5580	4855	0.87	1.66
	18	6360	4770	0.75	1.52	6180	4635	0.75	1.60	5970	4478	0.75	1.71
	20	6840	4309	0.63	1.56	6690	4215	0.63	1.64	6510	4101	0.63	1.75
	22	7290	3718	0.51	1.60	7140	3641	0.51	1.69	6960	3550	0.51	1.80
27	16	5940	5405	0.91	1.49	5760	5242	0.91	1.57	5580	5078	0.91	1.66
	18	6360	5024	0.79	1.52	6180	4882	0.79	1.60	5970	4716	0.79	1.71
	20	6840	4583	0.67	1.56	6690	4482	0.67	1.64	6510	4362	0.67	1.75
	22	7290	4010	0.55	1.60	7140	3927	0.55	1.69	6960	3828	0.55	1.80
28	16	5940	5643	0.95	1.49	5760	5472	0.95	1.57	5580	5301	0.95	1.66
	18	6360	5279	0.83	1.52	6180	5129	0.83	1.60	5970	4955	0.83	1.71
	20	6840	4856	0.71	1.56	6690	4750	0.71	1.64	6510	4622	0.71	1.75
	22	7290	4301	0.59	1.60	7140	4213	0.59	1.69	6960	4106	0.59	1.80
30	16	5940	5940	1.00	1.49	5760	5760	1.00	1.57	5580	5580	1.00	1.66
	18	6360	5788	0.91	1.52	6180	5624	0.91	1.60	5970	5433	0.91	1.71
	20	6840	5404	0.79	1.56	6690	5285	0.79	1.64	6510	5143	0.79	1.75
	22	7290	4884	0.67	1.60	7140	4784	0.67	1.69	6960	4663	0.67	1.80
32	16	5940	5940	1.00	1.49	5760	5760	1.00	1.57	5580	5580	1.00	1.66
	18	6360	6296	0.99	1.52	6180	6118	0.99	1.60	5970	5910	0.99	1.71
	20	6840	5951	0.87	1.56	6690	5820	0.87	1.64	6510	5664	0.87	1.75
	22	7290	5468	0.75	1.60	7140	5355	0.75	1.69	6960	5220	0.75	1.80
34	16	5940	5940	1.00	1.49	5760	5760	1.00	1.57	5580	5580	1.00	1.66
	18	6360	6360	1.00	1.52	6180	6180	1.00	1.60	5970	5970	1.00	1.71
	20	6840	6498	0.95	1.56	6690	6356	0.95	1.64	6510	6185	0.95	1.75
	22	7290	6051	0.83	1.60	7140	5926	0.83	1.69	6960	5777	0.83	1.80

Indoor Intake air D.B. (°C)	Indoor Intake air W.B. (°C)	Outdoor intake air D.B. (°C) 35				40				45			
		CA	SHC(W)	SHF	P.C.	CA	SHC(W)	SHF	P.C.	CA	SHC(W)	SHF	P.C.
20	16	5340	3364	0.63	1.79	5100	3213	0.63	1.92	4860	3062	0.63	2.07
	18	5760	2938	0.51	1.83	5580	2846	0.51	1.97	5220	2662	0.51	2.12
	20	6240	2434	0.39	1.88	6000	2340	0.39	2.01	5640	2200	0.39	2.16
22	16	5340	3791	0.71	1.79	5100	3621	0.71	1.92	4860	3451	0.71	2.07
	18	5760	3398	0.59	1.83	5580	3292	0.59	1.97	5220	3080	0.59	2.12
	20	6240	2933	0.47	1.88	6000	2820	0.47	2.01	5640	2651	0.47	2.16
24	16	5340	4219	0.79	1.79	5100	4029	0.79	1.92	4860	3839	0.79	2.07
	18	5760	3859	0.67	1.83	5580	3739	0.67	1.97	5220	3497	0.67	2.12
	20	6240	3432	0.55	1.88	6000	3300	0.55	2.01	5640	3102	0.55	2.16
	22	6720	2890	0.43	1.92	6480	2786	0.43	2.06	6120	2632	0.43	2.19
26	16	5340	4646	0.87	1.79	5100	4437	0.87	1.92	4860	4228	0.87	2.07
	18	5760	4320	0.75	1.83	5580	4185	0.75	1.97	5220	3915	0.75	2.12
	20	6240	3931	0.63	1.88	6000	3780	0.63	2.01	5640	3553	0.63	2.16
	22	6720	3427	0.51	1.92	6480	3305	0.51	2.06	6120	3121	0.51	2.19
27	16	5340	4859	0.91	1.79	5100	4641	0.91	1.92	4860	4423	0.91	2.07
	18	5760	4550	0.79	1.83	5580	4408	0.79	1.97	5220	4124	0.79	2.12
	20	6240	4181	0.67	1.88	6000	4020	0.67	2.01	5640	3779	0.67	2.16
	22	6720	3696	0.55	1.92	6480	3564	0.55	2.06	6120	3366	0.55	2.19
28	16	5340	5073	0.95	1.79	5100	4845	0.95	1.92	4860	4617	0.95	2.07
	18	5760	4781	0.83	1.83	5580	4631	0.83	1.97	5220	4333	0.83	2.12
	20	6240	4430	0.71	1.88	6000	4260	0.71	2.01	5640	4004	0.71	2.16
	22	6720	3965	0.59	1.92	6480	3823	0.59	2.06	6120	3611	0.59	2.19
30	16	5340	5340	1.00	1.79	5100	5100	1.00	1.92	4860	4860	1.00	2.07
	18	5760	5242	0.91	1.83	5580	5078	0.91	1.97	5220	4750	0.91	2.12
	20	6240	4930	0.79	1.88	6000	4740	0.79	2.01	5640	4456	0.79	2.16
	22	6720	4502	0.67	1.92	6480	4342	0.67	2.06	6120	4100	0.67	2.19
32	16	5340	5340	1.00	1.79	5100	5100	1.00	1.92	4860	4860	1.00	2.07
	18	5760	5702	0.99	1.83	5580	5524	0.99	1.97	5220	5168	0.99	2.12
	20	6240	5429	0.87	1.88	6000	5220	0.87	2.01	5640	4907	0.87	2.16
	22	6720	5040	0.75	1.92	6480	4860	0.75	2.06	6120	4590	0.75	2.19
34	16	5340	5340	1.00	1.79	5100	5100	1.00	1.92	4860	4860	1.00	2.07
	18	5760	5760	1.00	1.83	5580	5580	1.00	1.97	5220	5220	1.00	2.12
	20	6240	5928	0.95	1.88	6000	5700	0.95	2.01	5640	5358	0.95	2.16
	22	6720	5578	0.83	1.92	6480	5378	0.83	2.06	6120	5080	0.83	2.19

Notes CA: Capacity (W) SHC: Sensible heat capacity (W)
P.C.: Power consumption (kW) SHF: Sensible heat factor

PEAD-RP3EA/PUHZ-RP3VHA (230V)

Indoor Intake air D.B. (°C)	Indoor Intake air W.B. (°C)	Outdoor intake air D.B. (°C) 20 CA	20 SHC(W)	20 SHF	20 P.C.	25 CA	25 SHC(W)	25 SHF	25 P.C.	30 CA	30 SHC(W)	30 SHF	30 P.C.
20	16	7029	4709	0.67	1.72	6816	4567	0.67	1.82	6603	4424	0.67	1.92
	18	7526	4139	0.55	1.75	7313	4022	0.55	1.85	7065	3885	0.55	1.98
	20	8094	3480	0.43	1.81	7917	3404	0.43	1.89	7704	3313	0.43	2.02
22	16	7029	5272	0.75	1.72	6816	5112	0.75	1.82	6603	4952	0.75	1.92
	18	7526	4741	0.63	1.75	7313	4607	0.63	1.85	7065	4451	0.63	1.98
	20	8094	4128	0.51	1.81	7917	4037	0.51	1.89	7704	3929	0.51	2.02
24	16	7029	5834	0.83	1.72	6816	5657	0.83	1.82	6603	5480	0.83	1.92
	18	7526	5343	0.71	1.75	7313	5192	0.71	1.85	7065	5016	0.71	1.98
	20	8094	4775	0.59	1.81	7917	4671	0.59	1.89	7704	4545	0.59	2.02
	22	8627	4054	0.47	1.85	8449	3971	0.47	1.96	8236	3871	0.47	2.09
26	16	7029	6396	0.91	1.72	6816	6203	0.91	1.82	6603	6009	0.91	1.92
	18	7526	5946	0.79	1.75	7313	5777	0.79	1.85	7065	5581	0.79	1.98
	20	8094	5423	0.67	1.81	7917	5304	0.67	1.89	7704	5161	0.67	2.02
	22	8627	4745	0.55	1.85	8449	4647	0.55	1.96	8236	4530	0.55	2.09
27	16	7029	6678	0.95	1.72	6816	6475	0.95	1.82	6603	6273	0.95	1.92
	18	7526	6247	0.83	1.75	7313	6070	0.83	1.85	7065	5864	0.83	1.98
	20	8094	5747	0.71	1.81	7917	5621	0.71	1.89	7704	5469	0.71	2.02
	22	8627	5090	0.59	1.85	8449	4985	0.59	1.96	8236	4859	0.59	2.09
28	16	7029	6959	0.99	1.72	6816	6748	0.99	1.82	6603	6537	0.99	1.92
	18	7526	6548	0.87	1.75	7313	6362	0.87	1.85	7065	6146	0.87	1.98
	20	8094	6071	0.75	1.81	7917	5937	0.75	1.89	7704	5778	0.75	2.02
	22	8627	5435	0.63	1.85	8449	5323	0.63	1.96	8236	5189	0.63	2.09
30	16	7029	7029	1.00	1.72	6816	6816	1.00	1.82	6603	6603	1.00	1.92
	18	7526	7150	0.95	1.75	7313	6947	0.95	1.85	7065	6711	0.95	1.98
	20	8094	6718	0.83	1.81	7917	6571	0.83	1.89	7704	6394	0.83	2.02
	22	8627	6125	0.71	1.85	8449	5999	0.71	1.96	8236	5848	0.71	2.09
32	16	7029	7029	1.00	1.72	6816	6816	1.00	1.82	6603	6603	1.00	1.92
	18	7526	7526	1.00	1.75	7313	7313	1.00	1.85	7065	7065	1.00	1.98
	20	8094	7366	0.91	1.81	7917	7204	0.91	1.89	7704	7010	0.91	2.02
	22	8627	6815	0.79	1.85	8449	6675	0.79	1.96	8236	6506	0.79	2.09
34	16	7029	7029	1.00	1.72	6816	6816	1.00	1.82	6603	6603	1.00	1.92
	18	7526	7526	1.00	1.75	7313	7313	1.00	1.85	7065	7065	1.00	1.98
	20	8094	8013	0.99	1.81	7917	7837	0.99	1.89	7704	7626	0.99	2.02
	22	8627	7505	0.87	1.85	8449	7351	0.87	1.96	8236	7165	0.87	2.09

Indoor Intake air D.B. (°C)	Indoor Intake air W.B. (°C)	Outdoor intake air D.B. (°C) 35 CA	35 SHC(W)	35 SHF	35 P.C.	40 CA	40 SHC(W)	40 SHF	40 P.C.	45 CA	45 SHC(W)	45 SHF	45 P.C.
20	16	6319	4234	0.67	2.06	6035	4043	0.67	2.21	5751	3853	0.67	2.40
	18	6816	3749	0.55	2.12	6603	3632	0.55	2.28	6177	3397	0.55	2.45
	20	7384	3175	0.43	2.17	7100	3053	0.43	2.32	6674	2870	0.43	2.49
22	16	6319	4739	0.75	2.06	6035	4526	0.75	2.21	5751	4313	0.75	2.40
	18	6816	4294	0.63	2.12	6603	4160	0.63	2.28	6177	3892	0.63	2.45
	20	7384	3766	0.51	2.17	7100	3621	0.51	2.32	6674	3404	0.51	2.49
24	16	6319	5245	0.83	2.06	6035	5009	0.83	2.21	5751	4773	0.83	2.40
	18	6816	4839	0.71	2.12	6603	4688	0.71	2.28	6177	4386	0.71	2.45
	20	7384	4357	0.59	2.17	7100	4189	0.59	2.32	6674	3938	0.59	2.49
	22	7952	3737	0.47	2.21	7668	3604	0.47	2.39	7242	3404	0.47	2.54
26	16	6319	5750	0.91	2.06	6035	5492	0.91	2.21	5751	5233	0.91	2.40
	18	6816	5385	0.79	2.12	6603	5216	0.79	2.28	6177	4880	0.79	2.45
	20	7384	4947	0.67	2.17	7100	4757	0.67	2.32	6674	4472	0.67	2.49
	22	7952	4374	0.55	2.21	7668	4217	0.55	2.39	7242	3983	0.55	2.54
27	16	6319	6003	0.95	2.06	6035	5733	0.95	2.21	5751	5463	0.95	2.40
	18	6816	5657	0.83	2.12	6603	5480	0.83	2.28	6177	5127	0.83	2.45
	20	7384	5243	0.71	2.17	7100	5041	0.71	2.32	6674	4739	0.71	2.49
	22	7952	4692	0.59	2.21	7668	4524	0.59	2.39	7242	4273	0.59	2.54
28	16	6319	6256	0.99	2.06	6035	5975	0.99	2.21	5751	5693	0.99	2.40
	18	6816	5930	0.87	2.12	6603	5745	0.87	2.28	6177	5374	0.87	2.45
	20	7384	5538	0.75	2.17	7100	5325	0.75	2.32	6674	5006	0.75	2.49
	22	7952	5010	0.63	2.21	7668	4831	0.63	2.39	7242	4562	0.63	2.54
30	16	6319	6319	1.00	2.06	6035	6035	1.00	2.21	5751	5751	1.00	2.40
	18	6816	6475	0.95	2.12	6603	6273	0.95	2.28	6177	5868	0.95	2.45
	20	7384	6129	0.83	2.17	7100	5893	0.83	2.32	6674	5539	0.83	2.49
	22	7952	5646	0.71	2.21	7668	5444	0.71	2.39	7242	5142	0.71	2.54
32	16	6319	6319	1.00	2.06	6035	6035	1.00	2.21	5751	5751	1.00	2.40
	18	6816	6816	1.00	2.12	6603	6603	1.00	2.28	6177	6177	1.00	2.45
	20	7384	6719	0.91	2.17	7100	6461	0.91	2.32	6674	6073	0.91	2.49
	22	7952	6282	0.79	2.21	7668	6058	0.79	2.39	7242	5721	0.79	2.54
34	16	6319	6319	1.00	2.06	6035	6035	1.00	2.21	5751	5751	1.00	2.40
	18	6816	6816	1.00	2.12	6603	6603	1.00	2.28	6177	6177	1.00	2.45
	20	7384	7310	0.99	2.17	7100	7029	0.99	2.32	6674	6607	0.99	2.49
	22	7952	6918	0.87	2.21	7668	6671	0.87	2.39	7242	6301	0.87	2.54

Notes CA: Capacity (W) SHC: Sensible heat capacity (W)
P.C.: Power consumption (kW) SHF: Sensible heat factor

PEAD-RP4EA/PUHZ-RP4VHA

(230V)

Indoor Intake air D.B. (°C)	Indoor Intake air W.B. (°C)	Outdoor intake air D.B. (°C)											
		20				25				30			
		CA	SHC(W)	SHF	P.C.	CA	SHC(W)	SHF	P.C.	CA	SHC(W)	SHF	P.C.
20	16	9900	6534	0.66	2.46	9600	6336	0.66	2.60	9300	6138	0.66	2.76
	18	10600	5724	0.54	2.51	10300	5562	0.54	2.65	9950	5373	0.54	2.83
	20	11400	4788	0.42	2.59	11150	4683	0.42	2.71	10850	4557	0.42	2.90
22	16	9900	7326	0.74	2.46	9600	7104	0.74	2.60	9300	6882	0.74	2.76
	18	10600	6572	0.62	2.51	10300	6386	0.62	2.65	9950	6169	0.62	2.83
	20	11400	5700	0.50	2.59	11150	5575	0.50	2.71	10850	5425	0.50	2.90
24	16	9900	8118	0.82	2.46	9600	7872	0.82	2.60	9300	7626	0.82	2.76
	18	10600	7420	0.70	2.51	10300	7210	0.70	2.65	9950	6965	0.70	2.83
	20	11400	6612	0.58	2.59	11150	6467	0.58	2.71	10850	6293	0.58	2.90
	22	12150	5589	0.46	2.65	11900	5474	0.46	2.80	11600	5336	0.46	2.99
26	16	9900	8910	0.90	2.46	9600	8640	0.90	2.60	9300	8370	0.90	2.76
	18	10600	8268	0.78	2.51	10300	8034	0.78	2.65	9950	7761	0.78	2.83
	20	11400	7524	0.66	2.59	11150	7359	0.66	2.71	10850	7161	0.66	2.90
	22	12150	6561	0.54	2.65	11900	6426	0.54	2.80	11600	6264	0.54	2.99
27	16	9900	9306	0.94	2.46	9600	9024	0.94	2.60	9300	8742	0.94	2.76
	18	10600	8692	0.82	2.51	10300	8446	0.82	2.65	9950	8159	0.82	2.83
	20	11400	7980	0.70	2.59	11150	7805	0.70	2.71	10850	7595	0.70	2.90
	22	12150	7047	0.58	2.65	11900	6902	0.58	2.80	11600	6728	0.58	2.99
28	16	9900	9702	0.98	2.46	9600	9408	0.98	2.60	9300	9114	0.98	2.76
	18	10600	9116	0.86	2.51	10300	8858	0.86	2.65	9950	8557	0.86	2.83
	20	11400	8436	0.74	2.59	11150	8251	0.74	2.71	10850	8029	0.74	2.90
	22	12150	7533	0.62	2.65	11900	7378	0.62	2.80	11600	7192	0.62	2.99
30	16	9900	9900	1.00	2.46	9600	9600	1.00	2.60	9300	9300	1.00	2.76
	18	10600	9964	0.94	2.51	10300	9682	0.94	2.65	9950	9353	0.94	2.83
	20	11400	9348	0.82	2.59	11150	9143	0.82	2.71	10850	8897	0.82	2.90
	22	12150	8505	0.70	2.65	11900	8330	0.70	2.80	11600	8120	0.70	2.99
32	16	9900	9900	1.00	2.46	9600	9600	1.00	2.60	9300	9300	1.00	2.76
	18	10600	10600	1.00	2.51	10300	10300	1.00	2.65	9950	9950	1.00	2.83
	20	11400	10260	0.90	2.59	11150	10035	0.90	2.71	10850	9765	0.90	2.90
	22	12150	9477	0.78	2.65	11900	9282	0.78	2.80	11600	9048	0.78	2.99
34	16	9900	9900	1.00	2.46	9600	9600	1.00	2.60	9300	9300	1.00	2.76
	18	10600	10600	1.00	2.51	10300	10300	1.00	2.65	9950	9950	1.00	2.83
	20	11400	11172	0.98	2.59	11150	10927	0.98	2.71	10850	10633	0.98	2.90
	22	12150	10449	0.86	2.65	11900	10234	0.86	2.80	11600	9976	0.86	2.99

Indoor Intake air D.B. (°C)	Indoor Intake air W.B. (°C)	Outdoor intake air D.B. (°C)											
		35				40				45			
		CA	SHC(W)	SHF	P.C.	CA	SHC(W)	SHF	P.C.	CA	SHC(W)	SHF	P.C.
20	16	8900	5874	0.66	2.96	8500	5610	0.66	3.17	8100	5346	0.66	3.43
	18	9600	5184	0.54	3.03	9300	5022	0.54	3.26	8700	4698	0.54	3.51
	20	10400	4368	0.42	3.11	10000	4200	0.42	3.33	9400	3948	0.42	3.57
22	16	8900	6586	0.74	2.96	8500	6290	0.74	3.17	8100	5994	0.74	3.43
	18	9600	5952	0.62	3.03	9300	5766	0.62	3.26	8700	5394	0.62	3.51
	20	10400	5200	0.50	3.11	10000	5000	0.50	3.33	9400	4700	0.50	3.57
24	16	8900	7298	0.82	2.96	8500	6970	0.82	3.17	8100	6642	0.82	3.43
	18	9600	6720	0.70	3.03	9300	6510	0.70	3.26	8700	6090	0.70	3.51
	20	10400	6032	0.58	3.11	10000	5800	0.58	3.33	9400	5452	0.58	3.57
	22	11200	5152	0.46	3.17	10800	4968	0.46	3.42	10200	4692	0.46	3.63
26	16	8900	8010	0.90	2.96	8500	7650	0.90	3.17	8100	7290	0.90	3.43
	18	9600	7488	0.78	3.03	9300	7254	0.78	3.26	8700	6786	0.78	3.51
	20	10400	6864	0.66	3.11	10000	6600	0.66	3.33	9400	6204	0.66	3.57
	22	11200	6048	0.54	3.17	10800	5832	0.54	3.42	10200	5508	0.54	3.63
27	16	8900	8366	0.94	2.96	8500	7990	0.94	3.17	8100	7614	0.94	3.43
	18	9600	7872	0.82	3.03	9300	7626	0.82	3.26	8700	7134	0.82	3.51
	20	10400	7280	0.70	3.11	10000	7000	0.70	3.33	9400	6580	0.70	3.57
	22	11200	6496	0.58	3.17	10800	6264	0.58	3.42	10200	5916	0.58	3.63
28	16	8900	8722	0.98	2.96	8500	8330	0.98	3.17	8100	7938	0.98	3.43
	18	9600	8256	0.86	3.03	9300	7998	0.86	3.26	8700	7482	0.86	3.51
	20	10400	7696	0.74	3.11	10000	7400	0.74	3.33	9400	6956	0.74	3.57
	22	11200	6944	0.62	3.17	10800	6696	0.62	3.42	10200	6324	0.62	3.63
30	16	8900	8900	1.00	2.96	8500	8500	1.00	3.17	8100	8100	1.00	3.43
	18	9600	9024	0.94	3.03	9300	8742	0.94	3.26	8700	8178	0.94	3.51
	20	10400	8528	0.82	3.11	10000	8200	0.82	3.33	9400	7708	0.82	3.57
	22	11200	7840	0.70	3.17	10800	7560	0.70	3.42	10200	7140	0.70	3.63
32	16	8900	8900	1.00	2.96	8500	8500	1.00	3.17	8100	8100	1.00	3.43
	18	9600	9600	1.00	3.03	9300	9300	1.00	3.26	8700	8700	1.00	3.51
	20	10400	9360	0.90	3.11	10000	9000	0.90	3.33	9400	8460	0.90	3.57
	22	11200	8736	0.78	3.17	10800	8424	0.78	3.42	10200	7956	0.78	3.63
34	16	8900	8900	1.00	2.96	8500	8500	1.00	3.17	8100	8100	1.00	3.43
	18	9600	9600	1.00	3.03	9300	9300	1.00	3.26	8700	8700	1.00	3.51
	20	10400	10192	0.98	3.11	10000	9800	0.98	3.33	9400	9212	0.98	3.57
	22	11200	9632	0.86	3.17	10800	9288	0.86	3.42	10200	8772	0.86	3.63

Notes CA: Capacity (W) SHC: Sensible heat capacity (W)
P.C.: Power consumption (kW) SHF: Sensible heat factor

PEAD-RP5EA/PUHZ-RP5VHA (230V)

Indoor Intake air D.B. (°C)	Indoor Intake air W.B. (°C)	Outdoor intake air D.B. (°C) 20 CA	20 SHC(W)	20 SHF	20 P.C.	25 CA	25 SHC(W)	25 SHF	25 P.C.	30 CA	30 SHC(W)	30 SHF	30 P.C.
20	16	12375	8168	0.66	2.95	12000	7920	0.66	3.12	11625	7673	0.66	3.30
	18	13250	7155	0.54	3.01	12875	6953	0.54	3.17	12438	6716	0.54	3.39
	20	14250	5985	0.42	3.10	13938	5854	0.42	3.25	13563	5696	0.42	3.47
22	16	12375	9158	0.74	2.95	12000	8880	0.74	3.12	11625	8603	0.74	3.30
	18	13250	8215	0.62	3.01	12875	7983	0.62	3.17	12438	7711	0.62	3.39
	20	14250	7125	0.50	3.10	13938	6969	0.50	3.25	13563	6781	0.50	3.47
24	16	12375	10148	0.82	2.95	12000	9840	0.82	3.12	11625	9533	0.82	3.30
	18	13250	9275	0.70	3.01	12875	9013	0.70	3.17	12438	8706	0.70	3.39
	20	14250	8265	0.58	3.10	13938	8084	0.58	3.25	13563	7866	0.58	3.47
	22	15188	6986	0.46	3.17	14875	6843	0.46	3.36	14500	6670	0.46	3.58
26	16	12375	11138	0.90	2.95	12000	10800	0.90	3.12	11625	10463	0.90	3.30
	18	13250	10335	0.78	3.01	12875	10043	0.78	3.17	12438	9701	0.78	3.39
	20	14250	9405	0.66	3.10	13938	9199	0.66	3.25	13563	8951	0.66	3.47
	22	15188	8201	0.54	3.17	14875	8033	0.54	3.36	14500	7830	0.54	3.58
27	16	12375	11633	0.94	2.95	12000	11280	0.94	3.12	11625	10928	0.94	3.30
	18	13250	10865	0.82	3.01	12875	10558	0.82	3.17	12438	10199	0.82	3.39
	20	14250	9975	0.70	3.10	13938	9756	0.70	3.25	13563	9494	0.70	3.47
	22	15188	8809	0.58	3.17	14875	8628	0.58	3.36	14500	8410	0.58	3.58
28	16	12375	12128	0.98	2.95	12000	11760	0.98	3.12	11625	11393	0.98	3.30
	18	13250	11395	0.86	3.01	12875	11073	0.86	3.17	12438	10696	0.86	3.39
	20	14250	10545	0.74	3.10	13938	10314	0.74	3.25	13563	10036	0.74	3.47
	22	15188	9416	0.62	3.17	14875	9223	0.62	3.36	14500	8990	0.62	3.58
30	16	12375	12375	1.00	2.95	12000	12000	1.00	3.12	11625	11625	1.00	3.30
	18	13250	12455	0.94	3.01	12875	12103	0.94	3.17	12438	11691	0.94	3.39
	20	14250	11685	0.82	3.10	13938	11429	0.82	3.25	13563	11121	0.82	3.47
	22	15188	10631	0.70	3.17	14875	10413	0.70	3.36	14500	10150	0.70	3.58
32	16	12375	12375	1.00	2.95	12000	12000	1.00	3.12	11625	11625	1.00	3.30
	18	13250	13250	1.00	3.01	12875	12875	1.00	3.17	12438	12438	1.00	3.39
	20	14250	12825	0.90	3.10	13938	12544	0.90	3.25	13563	12206	0.90	3.47
	22	15188	11846	0.78	3.17	14875	11603	0.78	3.36	14500	11310	0.78	3.58
34	16	12375	12375	1.00	2.95	12000	12000	1.00	3.12	11625	11625	1.00	3.30
	18	13250	13250	1.00	3.01	12875	12875	1.00	3.17	12438	12438	1.00	3.39
	20	14250	13965	0.98	3.10	13938	13659	0.98	3.25	13563	13291	0.98	3.47
	22	15188	13061	0.86	3.17	14875	12793	0.86	3.36	14500	12470	0.86	3.58

Indoor Intake air D.B. (°C)	Indoor Intake air W.B. (°C)	Outdoor intake air D.B. (°C) 35 CA	35 SHC(W)	35 SHF	35 P.C.	40 CA	40 SHC(W)	40 SHF	40 P.C.	45 CA	45 SHC(W)	45 SHF	45 P.C.
20	16	11125	7343	0.66	3.54	10625	7013	0.66	3.80	10125	6683	0.66	4.11
	18	12000	6480	0.54	3.63	11625	6278	0.54	3.91	10875	5873	0.54	4.21
	20	13000	5460	0.42	3.73	12500	5250	0.42	3.99	11750	4935	0.42	4.28
22	16	11125	8233	0.74	3.54	10625	7863	0.74	3.80	10125	7493	0.74	4.11
	18	12000	7440	0.62	3.63	11625	7208	0.62	3.91	10875	6743	0.62	4.21
	20	13000	6500	0.50	3.73	12500	6250	0.50	3.99	11750	5875	0.50	4.28
24	16	11125	9123	0.82	3.54	10625	8713	0.82	3.80	10125	8303	0.82	4.11
	18	12000	8400	0.70	3.63	11625	8138	0.70	3.91	10875	7613	0.70	4.21
	20	13000	7540	0.58	3.73	12500	7250	0.58	3.99	11750	6815	0.58	4.28
	22	14000	6440	0.46	3.80	13500	6210	0.46	4.10	12750	5865	0.46	4.35
26	16	11125	10013	0.90	3.54	10625	9563	0.90	3.80	10125	9113	0.90	4.11
	18	12000	9360	0.78	3.63	11625	9068	0.78	3.91	10875	8483	0.78	4.21
	20	13000	8580	0.66	3.73	12500	8250	0.66	3.99	11750	7755	0.66	4.28
	22	14000	7560	0.54	3.80	13500	7290	0.54	4.10	12750	6885	0.54	4.35
27	16	11125	10458	0.94	3.54	10625	9988	0.94	3.80	10125	9518	0.94	4.11
	18	12000	9840	0.82	3.63	11625	9533	0.82	3.91	10875	8918	0.82	4.21
	20	13000	9100	0.70	3.73	12500	8750	0.70	3.99	11750	8225	0.70	4.28
	22	14000	8120	0.58	3.80	13500	7830	0.58	4.10	12750	7395	0.58	4.35
28	16	11125	10903	0.98	3.54	10625	10413	0.98	3.80	10125	9923	0.98	4.11
	18	12000	10320	0.86	3.63	11625	9998	0.86	3.91	10875	9353	0.86	4.21
	20	13000	9620	0.74	3.73	12500	9250	0.74	3.99	11750	8695	0.74	4.28
	22	14000	8680	0.62	3.80	13500	8370	0.62	4.10	12750	7905	0.62	4.35
30	16	11125	11125	1.00	3.54	10625	10625	1.00	3.80	10125	10125	1.00	4.11
	18	12000	11280	0.94	3.63	11625	10928	0.94	3.91	10875	10223	0.94	4.21
	20	13000	10660	0.82	3.73	12500	10250	0.82	3.99	11750	9635	0.82	4.28
	22	14000	9800	0.70	3.80	13500	9450	0.70	4.10	12750	8925	0.70	4.35
32	16	11125	11125	1.00	3.54	10625	10625	1.00	3.80	10125	10125	1.00	4.11
	18	12000	12000	1.00	3.63	11625	11625	1.00	3.91	10875	10875	1.00	4.21
	20	13000	11700	0.90	3.73	12500	11250	0.90	3.99	11750	10575	0.90	4.28
	22	14000	10920	0.78	3.80	13500	10530	0.78	4.10	12750	9945	0.78	4.35
34	16	11125	11125	1.00	3.54	10625	10625	1.00	3.80	10125	10125	1.00	4.11
	18	12000	12000	1.00	3.63	11625	11625	1.00	3.91	10875	10875	1.00	4.21
	20	13000	12740	0.98	3.73	12500	12250	0.98	3.99	11750	11515	0.98	4.28
	22	14000	12040	0.86	3.80	13500	11610	0.86	4.10	12750	10965	0.86	4.35

Notes CA: Capacity (W) SHC: Sensible heat capacity (W)
P.C.: Power consumption (kW) SHF: Sensible heat factor

PEAD-RP6EA/PUHZ-RP6VHA

(230V)

Indoor Intake air D.B. (°C)	Indoor Intake air W.B. (°C)	Outdoor intake air D.B. (°C) 20 CA	20 SHC(W)	20 SHF	20 P.C.	25 CA	25 SHC(W)	25 SHF	25 P.C.	30 CA	30 SHC(W)	30 SHF	30 P.C.
20	16	13860	9009	0.65	3.93	13440	8736	0.65	4.15	13020	8463	0.65	4.39
	18	14840	7865	0.53	4.00	14420	7643	0.53	4.22	13930	7383	0.53	4.52
	20	15960	6544	0.41	4.12	15610	6400	0.41	4.32	15190	6228	0.41	4.62
22	16	13860	10118	0.73	3.93	13440	9811	0.73	4.15	13020	9505	0.73	4.39
	18	14840	9052	0.61	4.00	14420	8796	0.61	4.22	13930	8497	0.61	4.52
	20	15960	7820	0.49	4.12	15610	7649	0.49	4.32	15190	7443	0.49	4.62
24	16	13860	11227	0.81	3.93	13440	10886	0.81	4.15	13020	10546	0.81	4.39
	18	14840	10240	0.69	4.00	14420	9950	0.69	4.22	13930	9612	0.69	4.52
	20	15960	9097	0.57	4.12	15610	8898	0.57	4.32	15190	8658	0.57	4.62
	22	17010	7655	0.45	4.22	16660	7497	0.45	4.47	16240	7308	0.45	4.76
26	16	13860	12335	0.89	3.93	13440	11962	0.89	4.15	13020	11588	0.89	4.39
	18	14840	11427	0.77	4.00	14420	11103	0.77	4.22	13930	10726	0.77	4.52
	20	15960	10374	0.65	4.12	15610	10147	0.65	4.32	15190	9874	0.65	4.62
	22	17010	9015	0.53	4.22	16660	8830	0.53	4.47	16240	8607	0.53	4.76
27	16	13860	12890	0.93	3.93	13440	12499	0.93	4.15	13020	12109	0.93	4.39
	18	14840	12020	0.81	4.00	14420	11680	0.81	4.22	13930	11283	0.81	4.52
	20	15960	11012	0.69	4.12	15610	10771	0.69	4.32	15190	10481	0.69	4.62
	22	17010	9696	0.57	4.22	16660	9496	0.57	4.47	16240	9257	0.57	4.76
28	16	13860	13444	0.97	3.93	13440	13037	0.97	4.15	13020	12629	0.97	4.39
	18	14840	12614	0.85	4.00	14420	12257	0.85	4.22	13930	11841	0.85	4.52
	20	15960	11651	0.73	4.12	15610	11395	0.73	4.32	15190	11089	0.73	4.62
	22	17010	10376	0.61	4.22	16660	10163	0.61	4.47	16240	9906	0.61	4.76
30	16	13860	13860	1.00	3.93	13440	13440	1.00	4.15	13020	13020	1.00	4.39
	18	14840	13801	0.93	4.00	14420	13411	0.93	4.22	13930	12955	0.93	4.52
	20	15960	12928	0.81	4.12	15610	12644	0.81	4.32	15190	12304	0.81	4.62
	22	17010	11737	0.69	4.22	16660	11495	0.69	4.47	16240	11206	0.69	4.76
32	16	13860	13860	1.00	3.93	13440	13440	1.00	4.15	13020	13020	1.00	4.39
	18	14840	14840	1.00	4.00	14420	14420	1.00	4.22	13930	13930	1.00	4.52
	20	15960	14204	0.89	4.12	15610	13893	0.89	4.32	15190	13519	0.89	4.62
	22	17010	13098	0.77	4.22	16660	12828	0.77	4.47	16240	12505	0.77	4.76
34	16	13860	13860	1.00	3.93	13440	13440	1.00	4.15	13020	13020	1.00	4.39
	18	14840	14840	1.00	4.00	14420	14420	1.00	4.22	13930	13930	1.00	4.52
	20	15960	15481	0.97	4.12	15610	15142	0.97	4.32	15190	14734	0.97	4.62
	22	17010	14459	0.85	4.22	16660	14161	0.85	4.47	16240	13804	0.85	4.76

Indoor Intake air D.B. (°C)	Indoor Intake air W.B. (°C)	Outdoor intake air D.B. (°C) 35 CA	35 SHC(W)	35 SHF	35 P.C.	40 CA	40 SHC(W)	40 SHF	40 P.C.	45 CA	45 SHC(W)	45 SHF	45 P.C.
20	16	12460	8099	0.65	4.71	11900	7735	0.65	5.06	11340	7371	0.65	5.47
	18	13440	7123	0.53	4.84	13020	6901	0.53	5.20	12180	6455	0.53	5.60
	20	14560	5970	0.41	4.96	14000	5740	0.41	5.30	13160	5396	0.41	5.70
22	16	12460	9096	0.73	4.71	11900	8687	0.73	5.06	11340	8278	0.73	5.47
	18	13440	8198	0.61	4.84	13020	7942	0.61	5.20	12180	7430	0.61	5.60
	20	14560	7134	0.49	4.96	14000	6860	0.49	5.30	13160	6448	0.49	5.70
24	16	12460	10093	0.81	4.71	11900	9639	0.81	5.06	11340	9185	0.81	5.47
	18	13440	9274	0.69	4.84	13020	8984	0.69	5.20	12180	8404	0.69	5.60
	20	14560	8299	0.57	4.96	14000	7980	0.57	5.30	13160	7501	0.57	5.70
	22	15680	7056	0.45	5.06	15120	6804	0.45	5.45	14280	6426	0.45	5.79
26	16	12460	11089	0.89	4.71	11900	10591	0.89	5.06	11340	10093	0.89	5.47
	18	13440	10349	0.77	4.84	13020	10025	0.77	5.20	12180	9379	0.77	5.60
	20	14560	9464	0.65	4.96	14000	9100	0.65	5.30	13160	8554	0.65	5.70
	22	15680	8310	0.53	5.06	15120	8014	0.53	5.45	14280	7568	0.53	5.79
27	16	12460	11588	0.93	4.71	11900	11067	0.93	5.06	11340	10546	0.93	5.47
	18	13440	10886	0.81	4.84	13020	10546	0.81	5.20	12180	9866	0.81	5.60
	20	14560	10046	0.69	4.96	14000	9660	0.69	5.30	13160	9080	0.69	5.70
	22	15680	8938	0.57	5.06	15120	8618	0.57	5.45	14280	8140	0.57	5.79
28	16	12460	12086	0.97	4.71	11900	11543	0.97	5.06	11340	11000	0.97	5.47
	18	13440	11424	0.85	4.84	13020	11067	0.85	5.20	12180	10353	0.85	5.60
	20	14560	10629	0.73	4.96	14000	10220	0.73	5.30	13160	9607	0.73	5.70
	22	15680	9565	0.61	5.06	15120	9223	0.61	5.45	14280	8711	0.61	5.79
30	16	12460	12460	1.00	4.71	11900	11900	1.00	5.06	11340	11340	1.00	5.47
	18	13440	12499	0.93	4.84	13020	12109	0.93	5.20	12180	11327	0.93	5.60
	20	14560	11794	0.81	4.96	14000	11340	0.81	5.30	13160	10660	0.81	5.70
	22	15680	10819	0.69	5.06	15120	10433	0.69	5.45	14280	9853	0.69	5.79
32	16	12460	12460	1.00	4.71	11900	11900	1.00	5.06	11340	11340	1.00	5.47
	18	13440	13440	1.00	4.84	13020	13020	1.00	5.20	12180	12180	1.00	5.60
	20	14560	12958	0.89	4.96	14000	12460	0.89	5.30	13160	11712	0.89	5.70
	22	15680	12074	0.77	5.06	15120	11642	0.77	5.45	14280	10996	0.77	5.79
34	16	12460	12460	1.00	4.71	11900	11900	1.00	5.06	11340	11340	1.00	5.47
	18	13440	13440	1.00	4.84	13020	13020	1.00	5.20	12180	12180	1.00	5.60
	20	14560	14123	0.97	4.96	14000	13580	0.97	5.30	13160	12765	0.97	5.70
	22	15680	13328	0.85	5.06	15120	12852	0.85	5.45	14280	12138	0.85	5.79

Notes CA: Capacity (W) SHC: Sensible heat capacity (W)
P.C.: Power consumption (kW) SHF: Sensible heat factor

PEAD-RP.GA

PEAD-RP2.5GA/PUHZ-RP2.5VHA

(230V)

Indoor Intake air D.B. (°C)	Indoor Intake air W.B. (°C)	Outdoor intake air D.B. (°C) 20 CA	20 SHC(W)	20 SHF	20 P.C.	25 CA	25 SHC(W)	25 SHF	25 P.C.	30 CA	30 SHC(W)	30 SHF	30 P.C.
20	16	7029	4499	0.64	1.72	6816	4362	0.64	1.82	6603	4226	0.64	1.92
	18	7526	3914	0.52	1.75	7313	3803	0.52	1.85	7065	3674	0.52	1.98
	20	8094	3238	0.40	1.81	7917	3167	0.40	1.89	7704	3081	0.40	2.02
22	16	7029	5061	0.72	1.72	6816	4908	0.72	1.82	6603	4754	0.72	1.92
	18	7526	4516	0.60	1.75	7313	4388	0.60	1.85	7065	4239	0.60	1.98
	20	8094	3885	0.48	1.81	7917	3800	0.48	1.89	7704	3698	0.48	2.02
24	16	7029	5623	0.80	1.72	6816	5453	0.80	1.82	6603	5282	0.80	1.92
	18	7526	5118	0.68	1.75	7313	4973	0.68	1.85	7065	4804	0.68	1.98
	20	8094	4533	0.56	1.81	7917	4433	0.56	1.89	7704	4314	0.56	2.02
	22	8627	3796	0.44	1.85	8449	3718	0.44	1.96	8236	3624	0.44	2.09
26	16	7029	6186	0.88	1.72	6816	5998	0.88	1.82	6603	5811	0.88	1.92
	18	7526	5720	0.76	1.75	7313	5558	0.76	1.85	7065	5369	0.76	1.98
	20	8094	5180	0.64	1.81	7917	5067	0.64	1.89	7704	4930	0.64	2.02
	22	8627	4486	0.52	1.85	8449	4393	0.52	1.96	8236	4283	0.52	2.09
27	16	7029	6467	0.92	1.72	6816	6271	0.92	1.82	6603	6075	0.92	1.92
	18	7526	6021	0.80	1.75	7313	5850	0.80	1.85	7065	5652	0.80	1.98
	20	8094	5504	0.68	1.81	7917	5383	0.68	1.89	7704	5238	0.68	2.02
	22	8627	4831	0.56	1.85	8449	4731	0.56	1.96	8236	4612	0.56	2.09
28	16	7029	6748	0.96	1.72	6816	6543	0.96	1.82	6603	6339	0.96	1.92
	18	7526	6322	0.84	1.75	7313	6143	0.84	1.85	7065	5934	0.84	1.98
	20	8094	5828	0.72	1.81	7917	5700	0.72	1.89	7704	5547	0.72	2.02
	22	8627	5176	0.60	1.85	8449	5069	0.60	1.96	8236	4942	0.60	2.09
30	16	7029	7029	1.00	1.72	6816	6816	1.00	1.82	6603	6603	1.00	1.92
	18	7526	6924	0.92	1.75	7313	6728	0.92	1.85	7065	6499	0.92	1.98
	20	8094	6475	0.80	1.81	7917	6333	0.80	1.89	7704	6163	0.80	2.02
	22	8627	5866	0.68	1.85	8449	5745	0.68	1.96	8236	5600	0.68	2.09
32	16	7029	7029	1.00	1.72	6816	6816	1.00	1.82	6603	6603	1.00	1.92
	18	7526	7526	1.00	1.75	7313	7313	1.00	1.85	7065	7065	1.00	1.98
	20	8094	7123	0.88	1.81	7917	6967	0.88	1.89	7704	6779	0.88	2.02
	22	8627	6556	0.76	1.85	8449	6421	0.76	1.96	8236	6259	0.76	2.09
34	16	7029	7029	1.00	1.72	6816	6816	1.00	1.82	6603	6603	1.00	1.92
	18	7526	7526	1.00	1.75	7313	7313	1.00	1.85	7065	7065	1.00	1.98
	20	8094	7770	0.96	1.81	7917	7600	0.96	1.89	7704	7395	0.96	2.02
	22	8627	7246	0.84	1.85	8449	7097	0.84	1.96	8236	6918	0.84	2.09

Indoor Intake air D.B. (°C)	Indoor Intake air W.B. (°C)	Outdoor intake air D.B. (°C) 35 CA	35 SHC(W)	35 SHF	35 P.C.	40 CA	40 SHC(W)	40 SHF	40 P.C.	45 CA	45 SHC(W)	45 SHF	45 P.C.
20	16	6319	4044	0.64	2.06	6035	3862	0.64	2.21	5751	3681	0.64	2.40
	18	6816	3544	0.52	2.12	6603	3434	0.52	2.28	6177	3212	0.52	2.45
	20	7384	2954	0.40	2.17	7100	2840	0.40	2.32	6674	2670	0.40	2.49
22	16	6319	4550	0.72	2.06	6035	4345	0.72	2.21	5751	4141	0.72	2.40
	18	6816	4090	0.60	2.12	6603	3962	0.60	2.28	6177	3706	0.60	2.45
	20	7384	3544	0.48	2.17	7100	3408	0.48	2.32	6674	3204	0.48	2.49
24	16	6319	5055	0.80	2.06	6035	4828	0.80	2.21	5751	4601	0.80	2.40
	18	6816	4635	0.68	2.12	6603	4490	0.68	2.28	6177	4200	0.68	2.45
	20	7384	4135	0.56	2.17	7100	3976	0.56	2.32	6674	3737	0.56	2.49
	22	7952	3499	0.44	2.21	7668	3374	0.44	2.39	7242	3186	0.44	2.54
26	16	6319	5561	0.88	2.06	6035	5311	0.88	2.21	5751	5061	0.88	2.40
	18	6816	5180	0.76	2.12	6603	5018	0.76	2.28	6177	4695	0.76	2.45
	20	7384	4726	0.64	2.17	7100	4544	0.64	2.32	6674	4271	0.64	2.49
	22	7952	4135	0.52	2.21	7668	3987	0.52	2.39	7242	3766	0.52	2.54
27	16	6319	5813	0.92	2.06	6035	5552	0.92	2.21	5751	5291	0.92	2.40
	18	6816	5453	0.80	2.12	6603	5282	0.80	2.28	6177	4942	0.80	2.45
	20	7384	5021	0.68	2.17	7100	4828	0.68	2.32	6674	4538	0.68	2.49
	22	7952	4453	0.56	2.21	7668	4294	0.56	2.39	7242	4056	0.56	2.54
28	16	6319	6066	0.96	2.06	6035	5794	0.96	2.21	5751	5521	0.96	2.40
	18	6816	5725	0.84	2.12	6603	5547	0.84	2.28	6177	5189	0.84	2.45
	20	7384	5316	0.72	2.17	7100	5112	0.72	2.32	6674	4805	0.72	2.49
	22	7952	4771	0.60	2.21	7668	4601	0.60	2.39	7242	4345	0.60	2.54
30	16	6319	6319	1.00	2.06	6035	6035	1.00	2.21	5751	5751	1.00	2.40
	18	6816	6271	0.92	2.12	6603	6075	0.92	2.28	6177	5683	0.92	2.45
	20	7384	5907	0.80	2.17	7100	5680	0.80	2.32	6674	5339	0.80	2.49
	22	7952	5407	0.68	2.21	7668	5214	0.68	2.39	7242	4925	0.68	2.54
32	16	6319	6319	1.00	2.06	6035	6035	1.00	2.21	5751	5751	1.00	2.40
	18	6816	6816	1.00	2.12	6603	6603	1.00	2.28	6177	6177	1.00	2.45
	20	7384	6498	0.88	2.17	7100	6248	0.88	2.32	6674	5873	0.88	2.49
	22	7952	6044	0.76	2.21	7668	5828	0.76	2.39	7242	5504	0.76	2.54
34	16	6319	6319	1.00	2.06	6035	6035	1.00	2.21	5751	5751	1.00	2.40
	18	6816	6816	1.00	2.12	6603	6603	1.00	2.28	6177	6177	1.00	2.45
	20	7384	7089	0.96	2.17	7100	6816	0.96	2.32	6674	6407	0.96	2.49
	22	7952	6680	0.84	2.21	7668	6441	0.84	2.39	7242	6083	0.84	2.54

Notes CA: Capacity (W) SHC: Sensible heat capacity (W)
P.C.: Power consumption (kW) SHF: Sensible heat factor

PEAD-RP3GA/PUHZ-RP3VHA (230V)

Indoor Intake air D.B. (°C)	Indoor Intake air W.B. (°C)	Outdoor intake air D.B. (°C) 20 CA	20 SHC(W)	20 SHF	20 P.C.	25 CA	25 SHC(W)	25 SHF	25 P.C.	30 CA	30 SHC(W)	30 SHF	30 P.C.
20	16	7029	4639	0.66	1.72	6816	4499	0.66	1.82	6603	4358	0.66	1.92
	18	7526	4064	0.54	1.75	7313	3949	0.54	1.85	7065	3815	0.54	1.98
	20	8094	3399	0.42	1.81	7917	3325	0.42	1.89	7704	3235	0.42	2.02
22	16	7029	5201	0.74	1.72	6816	5044	0.74	1.82	6603	4886	0.74	1.92
	18	7526	4666	0.62	1.75	7313	4534	0.62	1.85	7065	4380	0.62	1.98
	20	8094	4047	0.50	1.81	7917	3958	0.50	1.89	7704	3852	0.50	2.02
24	16	7029	5764	0.82	1.72	6816	5589	0.82	1.82	6603	5414	0.82	1.92
	18	7526	5268	0.70	1.75	7313	5119	0.70	1.85	7065	4945	0.70	1.98
	20	8094	4695	0.58	1.81	7917	4592	0.58	1.89	7704	4468	0.58	2.02
	22	8627	3968	0.46	1.85	8449	3887	0.46	1.96	8236	3789	0.46	2.09
26	16	7029	6326	0.90	1.72	6816	6134	0.90	1.82	6603	5943	0.90	1.92
	18	7526	5870	0.78	1.75	7313	5704	0.78	1.85	7065	5510	0.78	1.98
	20	8094	5342	0.66	1.81	7917	5225	0.66	1.89	7704	5084	0.66	2.02
	22	8627	4658	0.54	1.85	8449	4562	0.54	1.96	8236	4447	0.54	2.09
27	16	7029	6607	0.94	1.72	6816	6407	0.94	1.82	6603	6207	0.94	1.92
	18	7526	6171	0.82	1.75	7313	5997	0.82	1.85	7065	5793	0.82	1.98
	20	8094	5666	0.70	1.81	7917	5542	0.70	1.89	7704	5392	0.70	2.02
	22	8627	5003	0.58	1.85	8449	4900	0.58	1.96	8236	4777	0.58	2.09
28	16	7029	6888	0.98	1.72	6816	6680	0.98	1.82	6603	6471	0.98	1.92
	18	7526	6472	0.86	1.75	7313	6289	0.86	1.85	7065	6075	0.86	1.98
	20	8094	5990	0.74	1.81	7917	5858	0.74	1.89	7704	5701	0.74	2.02
	22	8627	5348	0.62	1.85	8449	5238	0.62	1.96	8236	5106	0.62	2.09
30	16	7029	7029	1.00	1.72	6816	6816	1.00	1.82	6603	6603	1.00	1.92
	18	7526	7074	0.94	1.75	7313	6874	0.94	1.85	7065	6641	0.94	1.98
	20	8094	6637	0.82	1.81	7917	6492	0.82	1.89	7704	6317	0.82	2.02
	22	8627	6039	0.70	1.85	8449	5914	0.70	1.96	8236	5765	0.70	2.09
32	16	7029	7029	1.00	1.72	6816	6816	1.00	1.82	6603	6603	1.00	1.92
	18	7526	7526	1.00	1.75	7313	7313	1.00	1.85	7065	7065	1.00	1.98
	20	8094	7285	0.90	1.81	7917	7125	0.90	1.89	7704	6933	0.90	2.02
	22	8627	6729	0.78	1.85	8449	6590	0.78	1.96	8236	6424	0.78	2.09
34	16	7029	7029	1.00	1.72	6816	6816	1.00	1.82	6603	6603	1.00	1.92
	18	7526	7526	1.00	1.75	7313	7313	1.00	1.85	7065	7065	1.00	1.98
	20	8094	7932	0.98	1.81	7917	7758	0.98	1.89	7704	7549	0.98	2.02
	22	8627	7419	0.86	1.85	8449	7266	0.86	1.96	8236	7083	0.86	2.09

Indoor Intake air D.B. (°C)	Indoor Intake air W.B. (°C)	Outdoor intake air D.B. (°C) 35 CA	35 SHC(W)	35 SHF	35 P.C.	40 CA	40 SHC(W)	40 SHF	40 P.C.	45 CA	45 SHC(W)	45 SHF	45 P.C.
20	16	6319	4171	0.66	2.06	6035	3983	0.66	2.21	5751	3796	0.66	2.40
	18	6816	3681	0.54	2.12	6603	3566	0.54	2.28	6177	3336	0.54	2.45
	20	7384	3101	0.42	2.17	7100	2982	0.42	2.32	6674	2803	0.42	2.49
22	16	6319	4676	0.74	2.06	6035	4466	0.74	2.21	5751	4256	0.74	2.40
	18	6816	4226	0.62	2.12	6603	4094	0.62	2.28	6177	3830	0.62	2.45
	20	7384	3692	0.50	2.17	7100	3550	0.50	2.32	6674	3337	0.50	2.49
24	16	6319	5182	0.82	2.06	6035	4949	0.82	2.21	5751	4716	0.82	2.40
	18	6816	4771	0.70	2.12	6603	4622	0.70	2.28	6177	4324	0.70	2.45
	20	7384	4283	0.58	2.17	7100	4118	0.58	2.32	6674	3871	0.58	2.49
	22	7952	3658	0.46	2.21	7668	3527	0.46	2.39	7242	3331	0.46	2.54
26	16	6319	5687	0.90	2.06	6035	5432	0.90	2.21	5751	5176	0.90	2.40
	18	6816	5316	0.78	2.12	6603	5150	0.78	2.28	6177	4818	0.78	2.45
	20	7384	4873	0.66	2.17	7100	4686	0.66	2.32	6674	4405	0.66	2.49
	22	7952	4294	0.54	2.21	7668	4141	0.54	2.39	7242	3911	0.54	2.54
27	16	6319	5940	0.94	2.06	6035	5673	0.94	2.21	5751	5406	0.94	2.40
	18	6816	5589	0.82	2.12	6603	5414	0.82	2.28	6177	5065	0.82	2.45
	20	7384	5169	0.70	2.17	7100	4970	0.70	2.32	6674	4672	0.70	2.49
	22	7952	4612	0.58	2.21	7668	4447	0.58	2.39	7242	4200	0.58	2.54
28	16	6319	6193	0.98	2.06	6035	5914	0.98	2.21	5751	5636	0.98	2.40
	18	6816	5862	0.86	2.12	6603	5679	0.86	2.28	6177	5312	0.86	2.45
	20	7384	5464	0.74	2.17	7100	5254	0.74	2.32	6674	4939	0.74	2.49
	22	7952	4930	0.62	2.21	7668	4754	0.62	2.39	7242	4490	0.62	2.54
30	16	6319	6319	1.00	2.06	6035	6035	1.00	2.21	5751	5751	1.00	2.40
	18	6816	6407	0.94	2.12	6603	6207	0.94	2.28	6177	5806	0.94	2.45
	20	7384	6055	0.82	2.17	7100	5822	0.82	2.32	6674	5473	0.82	2.49
	22	7952	5566	0.70	2.21	7668	5368	0.70	2.39	7242	5069	0.70	2.54
32	16	6319	6319	1.00	2.06	6035	6035	1.00	2.21	5751	5751	1.00	2.40
	18	6816	6816	1.00	2.12	6603	6603	1.00	2.28	6177	6177	1.00	2.45
	20	7384	6646	0.90	2.17	7100	6390	0.90	2.32	6674	6007	0.90	2.49
	22	7952	6203	0.78	2.21	7668	5981	0.78	2.39	7242	5649	0.78	2.54
34	16	6319	6319	1.00	2.06	6035	6035	1.00	2.21	5751	5751	1.00	2.40
	18	6816	6816	1.00	2.12	6603	6603	1.00	2.28	6177	6177	1.00	2.45
	20	7384	7236	0.98	2.17	7100	6958	0.98	2.32	6674	6541	0.98	2.49
	22	7952	6839	0.86	2.21	7668	6594	0.86	2.39	7242	6228	0.86	2.54

Notes CA: Capacity (W) SHC: Sensible heat capacity (W)
P.C.: Power consumption (kW) SHF: Sensible heat factor

PEAD-RP4GA/PUHZ-RP4VHA (230V)

Indoor Intake air D.B. (°C)	Indoor Intake air W.B. (°C)	Outdoor intake air D.B. (°C) 20 CA	20 SHC(W)	20 SHF	20 P.C.	25 CA	25 SHC(W)	25 SHF	25 P.C.	30 CA	30 SHC(W)	30 SHF	30 P.C.
20	16	9900	6336	0.64	2.46	9600	6144	0.64	2.60	9300	5952	0.64	2.76
	18	10600	5512	0.52	2.51	10300	5356	0.52	2.65	9950	5174	0.52	2.83
	20	11400	4560	0.40	2.59	11150	4460	0.40	2.71	10850	4340	0.40	2.90
22	16	9900	7128	0.72	2.46	9600	6912	0.72	2.60	9300	6696	0.72	2.76
	18	10600	6360	0.60	2.51	10300	6180	0.60	2.65	9950	5970	0.60	2.83
	20	11400	5472	0.48	2.59	11150	5352	0.48	2.71	10850	5208	0.48	2.90
24	16	9900	7920	0.80	2.46	9600	7680	0.80	2.60	9300	7440	0.80	2.76
	18	10600	7208	0.68	2.51	10300	7004	0.68	2.65	9950	6766	0.68	2.83
	20	11400	6384	0.56	2.59	11150	6244	0.56	2.71	10850	6076	0.56	2.90
	22	12150	5346	0.44	2.65	11900	5236	0.44	2.80	11600	5104	0.44	2.99
26	16	9900	8712	0.88	2.46	9600	8448	0.88	2.60	9300	8184	0.88	2.76
	18	10600	8056	0.76	2.51	10300	7828	0.76	2.65	9950	7562	0.76	2.83
	20	11400	7296	0.64	2.59	11150	7136	0.64	2.71	10850	6944	0.64	2.90
	22	12150	6318	0.52	2.65	11900	6188	0.52	2.80	11600	6032	0.52	2.99
27	16	9900	9108	0.92	2.46	9600	8832	0.92	2.60	9300	8556	0.92	2.76
	18	10600	8480	0.80	2.51	10300	8240	0.80	2.65	9950	7960	0.80	2.83
	20	11400	7752	0.68	2.59	11150	7582	0.68	2.71	10850	7378	0.68	2.90
	22	12150	6804	0.56	2.65	11900	6664	0.56	2.80	11600	6496	0.56	2.99
28	16	9900	9504	0.96	2.46	9600	9216	0.96	2.60	9300	8928	0.96	2.76
	18	10600	8904	0.84	2.51	10300	8652	0.84	2.65	9950	8358	0.84	2.83
	20	11400	8208	0.72	2.59	11150	8028	0.72	2.71	10850	7812	0.72	2.90
	22	12150	7290	0.60	2.65	11900	7140	0.60	2.80	11600	6960	0.60	2.99
30	16	9900	9900	1.00	2.46	9600	9600	1.00	2.60	9300	9300	1.00	2.76
	18	10600	9752	0.92	2.51	10300	9476	0.92	2.65	9950	9154	0.92	2.83
	20	11400	9120	0.80	2.59	11150	8920	0.80	2.71	10850	8680	0.80	2.90
	22	12150	8262	0.68	2.65	11900	8092	0.68	2.80	11600	7888	0.68	2.99
32	16	9900	9900	1.00	2.46	9600	9600	1.00	2.60	9300	9300	1.00	2.76
	18	10600	10600	1.00	2.51	10300	10300	1.00	2.65	9950	9950	1.00	2.83
	20	11400	10032	0.88	2.59	11150	9812	0.88	2.71	10850	9548	0.88	2.90
	22	12150	9234	0.76	2.65	11900	9044	0.76	2.80	11600	8816	0.76	2.99
34	16	9900	9900	1.00	2.46	9600	9600	1.00	2.60	9300	9300	1.00	2.76
	18	10600	10600	1.00	2.51	10300	10300	1.00	2.65	9950	9950	1.00	2.83
	20	11400	10944	0.96	2.59	11150	10704	0.96	2.71	10850	10416	0.96	2.90
	22	12150	10206	0.84	2.65	11900	9996	0.84	2.80	11600	9744	0.84	2.99

Indoor Intake air D.B. (°C)	Indoor Intake air W.B. (°C)	Outdoor intake air D.B. (°C) 35 CA	35 SHC(W)	35 SHF	35 P.C.	40 CA	40 SHC(W)	40 SHF	40 P.C.	45 CA	45 SHC(W)	45 SHF	45 P.C.
20	16	8900	5696	0.64	2.96	8500	5440	0.64	3.17	8100	5184	0.64	3.43
	18	9600	4992	0.52	3.03	9300	4836	0.52	3.26	8700	4524	0.52	3.51
	20	10400	4160	0.40	3.11	10000	4000	0.40	3.33	9400	3760	0.40	3.57
22	16	8900	6408	0.72	2.96	8500	6120	0.72	3.17	8100	5832	0.72	3.43
	18	9600	5760	0.60	3.03	9300	5580	0.60	3.26	8700	5220	0.60	3.51
	20	10400	4992	0.48	3.11	10000	4800	0.48	3.33	9400	4512	0.48	3.57
24	16	8900	7120	0.80	2.96	8500	6800	0.80	3.17	8100	6480	0.80	3.43
	18	9600	6528	0.68	3.03	9300	6324	0.68	3.26	8700	5916	0.68	3.51
	20	10400	5824	0.56	3.11	10000	5600	0.56	3.33	9400	5264	0.56	3.57
	22	11200	4928	0.44	3.17	10800	4752	0.44	3.42	10200	4488	0.44	3.63
26	16	8900	7832	0.88	2.96	8500	7480	0.88	3.17	8100	7128	0.88	3.43
	18	9600	7296	0.76	3.03	9300	7068	0.76	3.26	8700	6612	0.76	3.51
	20	10400	6656	0.64	3.11	10000	6400	0.64	3.33	9400	6016	0.64	3.57
	22	11200	5824	0.52	3.17	10800	5616	0.52	3.42	10200	5304	0.52	3.63
27	16	8900	8188	0.92	2.96	8500	7820	0.92	3.17	8100	7452	0.92	3.43
	18	9600	7680	0.80	3.03	9300	7440	0.80	3.26	8700	6960	0.80	3.51
	20	10400	7072	0.68	3.11	10000	6800	0.68	3.33	9400	6392	0.68	3.57
	22	11200	6272	0.56	3.17	10800	6048	0.56	3.42	10200	5712	0.56	3.63
28	16	8900	8544	0.96	2.96	8500	8160	0.96	3.17	8100	7776	0.96	3.43
	18	9600	8064	0.84	3.03	9300	7812	0.84	3.26	8700	7308	0.84	3.51
	20	10400	7488	0.72	3.11	10000	7200	0.72	3.33	9400	6768	0.72	3.57
	22	11200	6720	0.60	3.17	10800	6480	0.60	3.42	10200	6120	0.60	3.63
30	16	8900	8900	1.00	2.96	8500	8500	1.00	3.17	8100	8100	1.00	3.43
	18	9600	8832	0.92	3.03	9300	8556	0.92	3.26	8700	8004	0.92	3.51
	20	10400	8320	0.80	3.11	10000	8000	0.80	3.33	9400	7520	0.80	3.57
	22	11200	7616	0.68	3.17	10800	7344	0.68	3.42	10200	6936	0.68	3.63
32	16	8900	8900	1.00	2.96	8500	8500	1.00	3.17	8100	8100	1.00	3.43
	18	9600	9600	1.00	3.03	9300	9300	1.00	3.26	8700	8700	1.00	3.51
	20	10400	9152	0.88	3.11	10000	8800	0.88	3.33	9400	8272	0.88	3.57
	22	11200	8512	0.76	3.17	10800	8208	0.76	3.42	10200	7752	0.76	3.63
34	16	8900	8900	1.00	2.96	8500	8500	1.00	3.17	8100	8100	1.00	3.43
	18	9600	9600	1.00	3.03	9300	9300	1.00	3.26	8700	8700	1.00	3.51
	20	10400	9984	0.96	3.11	10000	9600	0.96	3.33	9400	9024	0.96	3.57
	22	11200	9408	0.84	3.17	10800	9072	0.84	3.42	10200	8568	0.84	3.63

Notes CA: Capacity (W) SHC: Sensible heat capacity (W)
P.C.: Power consumption (kW) SHF: Sensible heat factor

2) HEATING CAPACITY

PEAD-RP・EA/ PUHZ-RP・VHA

(230V)

Service Ref.	Indoor Intake air D.B.(°C)	Outdoor Intake air W.B. (°C)											
		-10		-5		0		5		10		15	
		CA	P.C.	CA	P.C.	CA	P.C.	CA	P.C.	CA	P.C.	CA	P.C.
PEAD-RP1.6EA	15	2604	0.74	2829	0.82	3157	0.95	4141	1.13	4674	1.26	5207	1.36
	20	2501	0.81	2706	0.88	2993	1.02	3998	1.22	4510	1.36	5023	1.46
	25	2419	0.86	2624	0.96	2870	1.11	3772	1.30	4346	1.46	4838	1.57
PEAD-RP2EA	15	3810	0.97	4140	1.07	4620	1.24	6060	1.49	6840	1.65	7620	1.78
	20	3660	1.06	3960	1.16	4380	1.34	5850	1.60	6600	1.78	7350	1.91
	25	3540	1.12	3840	1.25	4200	1.45	5520	1.70	6360	1.91	7080	2.05
PEAD-RP2.5EA	15	4445	1.12	4830	1.24	5390	1.43	7070	1.71	7980	1.90	8890	2.05
	20	4270	1.22	4620	1.33	5110	1.54	6825	1.84	7700	2.05	8575	2.20
	25	4130	1.29	4480	1.44	4900	1.67	6440	1.96	7420	2.19	8260	2.37
PEAD-RP3EA	15	5080	1.38	5520	1.52	6160	1.76	8080	2.11	9120	2.34	10160	2.53
	20	4880	1.50	5280	1.64	5840	1.90	7800	2.27	8800	2.53	9800	2.71
	25	4720	1.59	5120	1.78	5600	2.06	7360	2.41	8480	2.70	9440	2.91
PEAD-RP4EA	15	7112	2.05	7728	2.26	8624	2.61	11312	3.13	12768	3.48	14224	3.76
	20	6832	2.23	7392	2.44	8176	2.82	10920	3.38	12320	3.76	13720	4.04
	25	6608	2.37	7168	2.64	7840	3.06	10304	3.58	11872	4.02	13216	4.33
PEAD-RP5EA	15	8890	2.42	9660	2.67	10780	3.08	14140	3.70	15960	4.11	17780	4.44
	20	8540	2.63	9240	2.88	10220	3.33	13650	3.99	15400	4.44	17150	4.77
	25	8260	2.79	8960	3.12	9800	3.62	12880	4.23	14840	4.75	16520	5.12
PEAD-RP6EA	15	10160	2.81	11040	3.09	12320	3.57	16160	4.28	18240	4.76	20320	5.14
	20	9760	3.05	10560	3.33	11680	3.86	15600	4.62	17600	5.14	19600	5.52
	25	9440	3.24	10240	3.62	11200	4.19	14720	4.90	16960	5.50	18880	5.93

Notes CA: Capacity (W)
P.C.: Power consumption (kW)

PEAD-RP・GA/ PUHZ-RP・VHA

(230V)

Service Ref.	Indoor Intake air D.B.(°C)	Outdoor Intake air W.B. (°C)											
		-10		-5		0		5		10		15	
		CA	P.C.	CA	P.C.	CA	P.C.	CA	P.C.	CA	P.C.	CA	P.C.
PEAD-RP2.5GA	15	4445	1.04	4830	1.15	5390	1.33	7070	1.59	7980	1.77	8890	1.91
	20	4270	1.13	4620	1.24	5110	1.43	6825	1.72	7700	1.91	8575	2.05
	25	4130	1.20	4480	1.35	4900	1.56	6440	1.82	7420	2.04	8260	2.20
PEAD-RP3GA	15	5080	1.38	5520	1.52	6160	1.76	8080	2.11	9120	2.34	10160	2.53
	20	4880	1.50	5280	1.64	5840	1.90	7800	2.27	8800	2.53	9800	2.71
	25	4720	1.59	5120	1.78	5600	2.06	7360	2.41	8480	2.70	9440	2.91
PEAD-RP4GA	15	7112	2.05	7728	2.26	8624	2.61	11312	3.13	12768	3.48	14224	3.76
	20	6832	2.23	7392	2.44	8176	2.82	10920	3.38	12320	3.76	13720	4.04
	25	6608	2.37	7168	2.64	7840	3.06	10304	3.58	11872	4.02	13216	4.33

Notes CA: Capacity (W)
P.C.: Power consumption (kW)

A.4.6.2 PERFORMANCE CURVE

Cooling performance curve(50Hz)

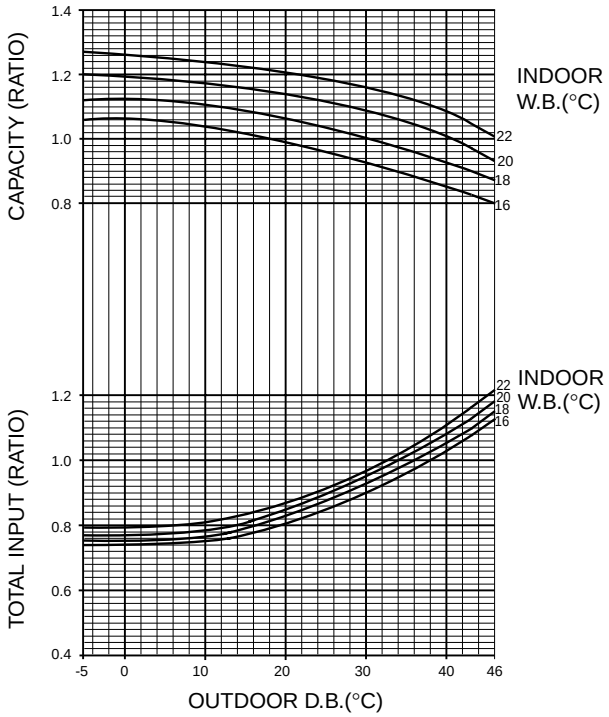

Heating performance curve(50Hz)

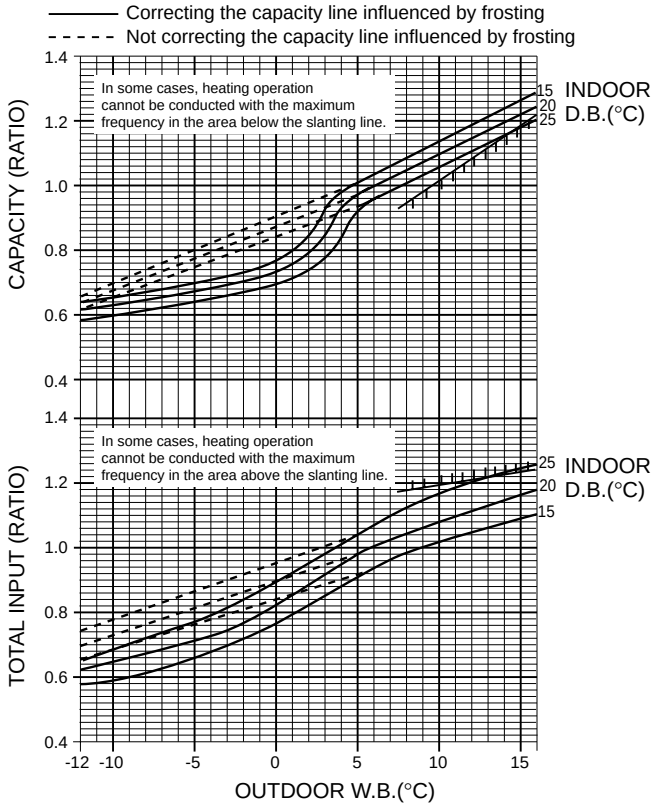

A.4.7 FAN PERFORMANCE AND CORRECTED AIR FLOW

PEAD-RP1.6EA

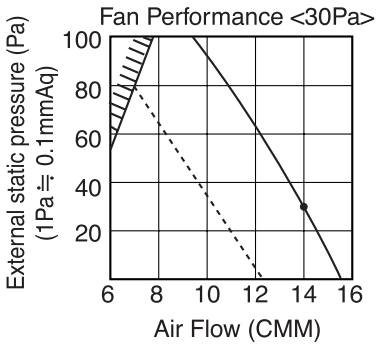

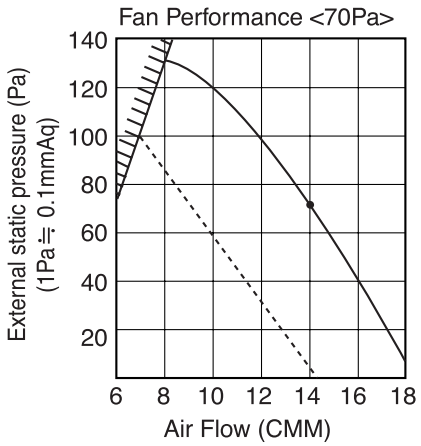

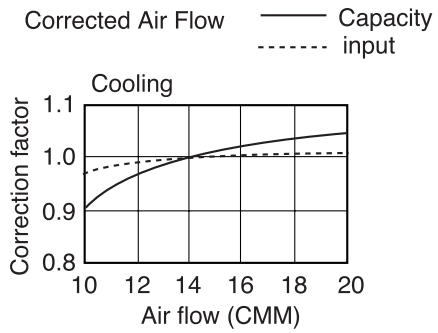

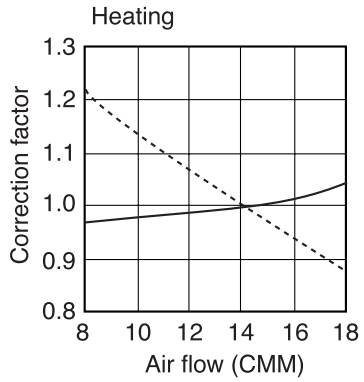

PEAD-RP2EA

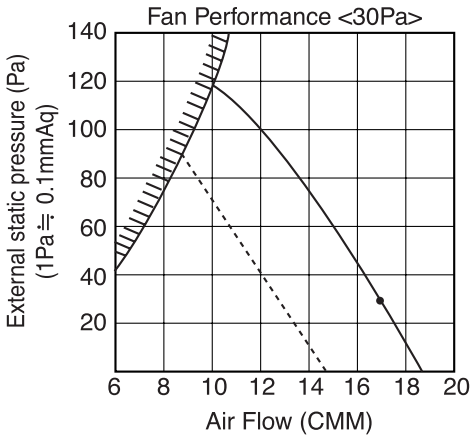

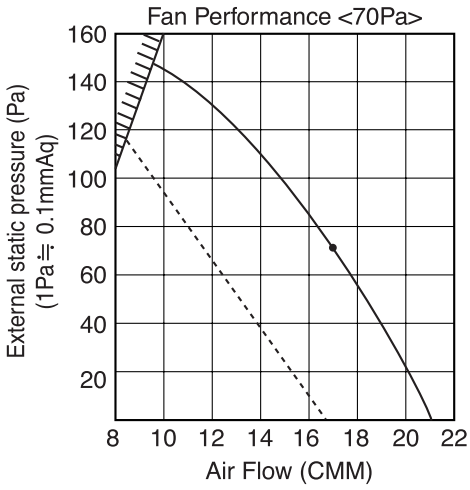

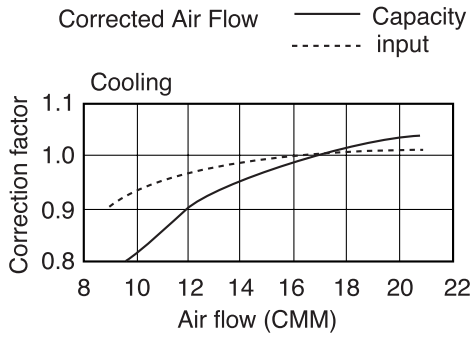

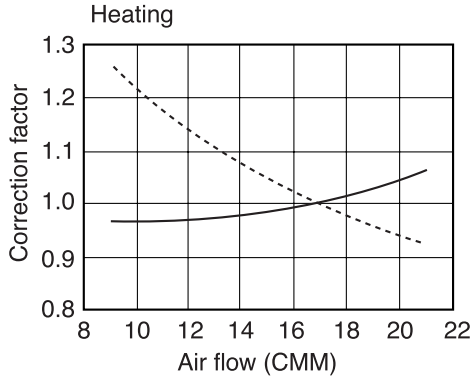

PEAD-RP2.5EA

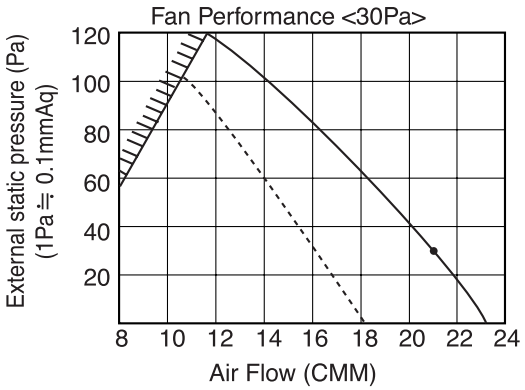

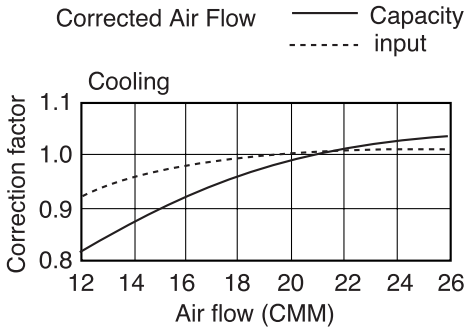

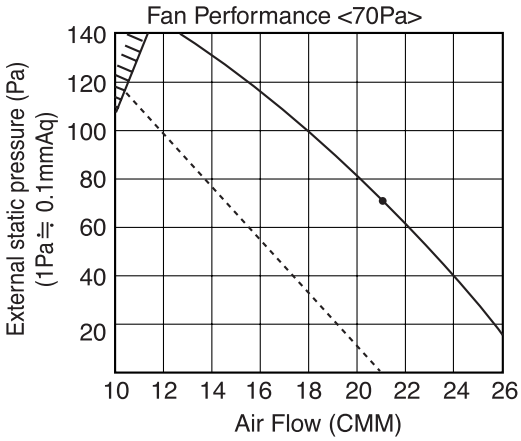

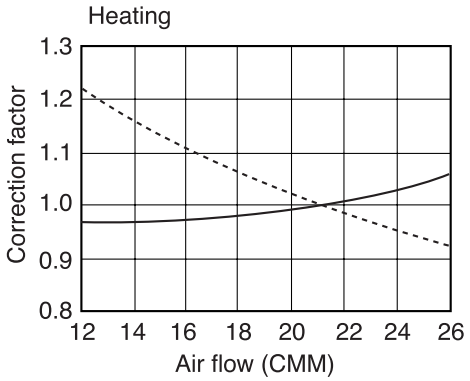

PEAD-RP3EA

Fan performance <130Pa>

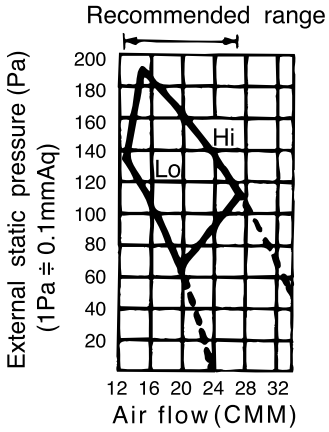

Fan performance <70Pa>

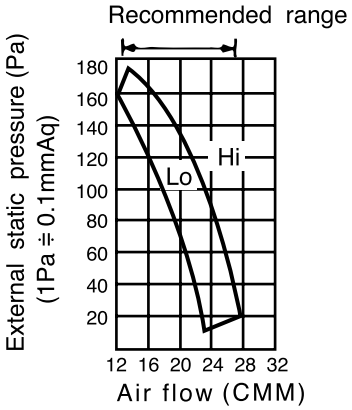

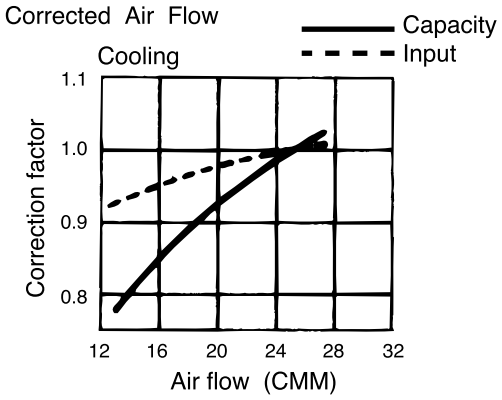

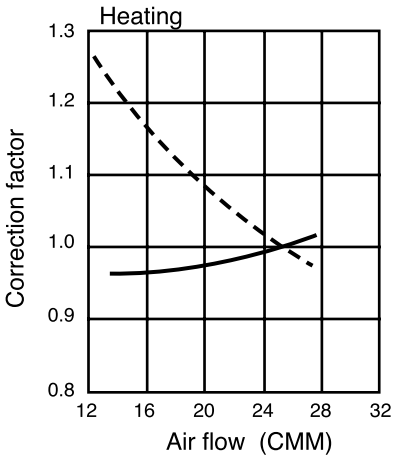

PEAD-RP4EA

Fan performance <130Pa>

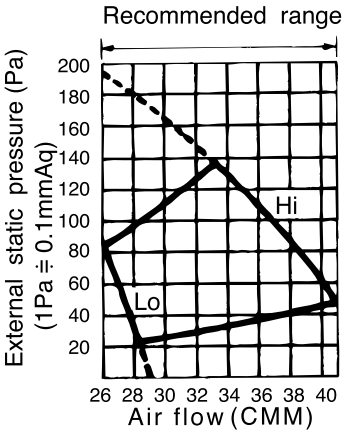

Fan performance <70Pa>

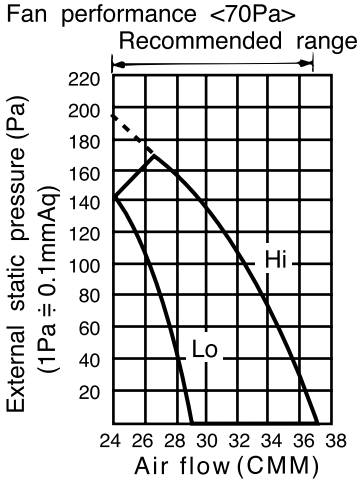

Corrected Air Flow

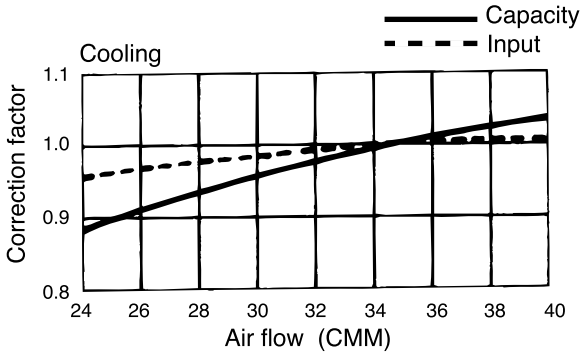

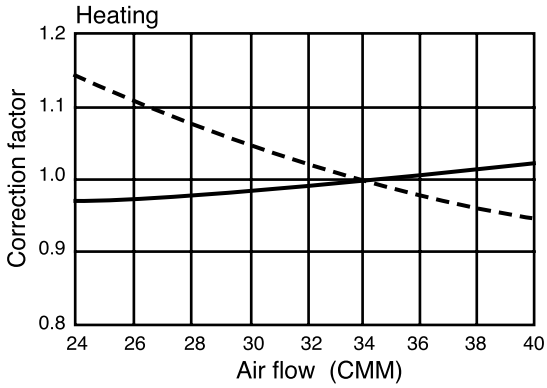

PEAD-RP5EA

Fan performance <130Pa>

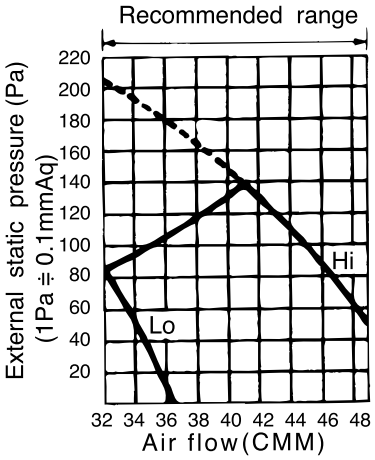

Fan performance <70Pa>

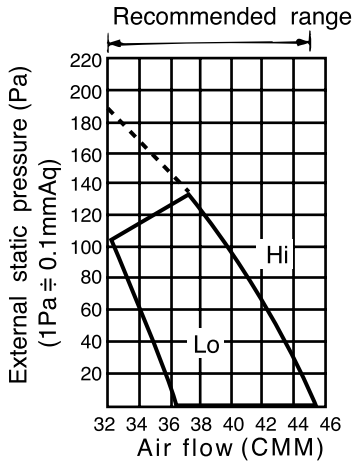

Corrected Air Flow

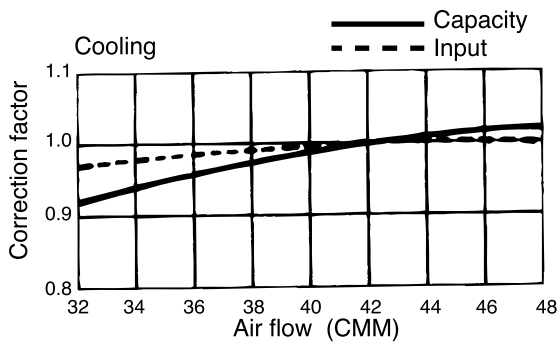

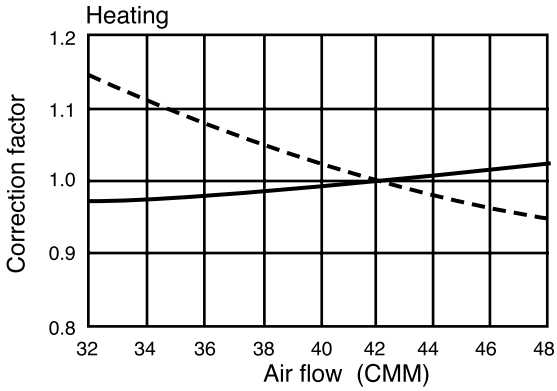

PEAD-RP6EA

Fan performance <130Pa>

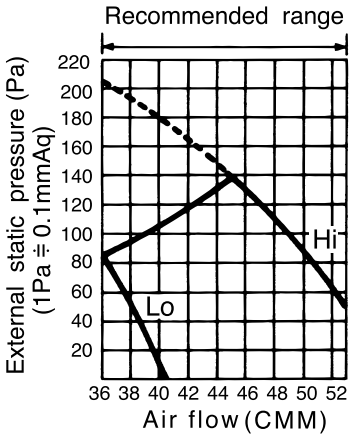

Fan performance <70Pa>

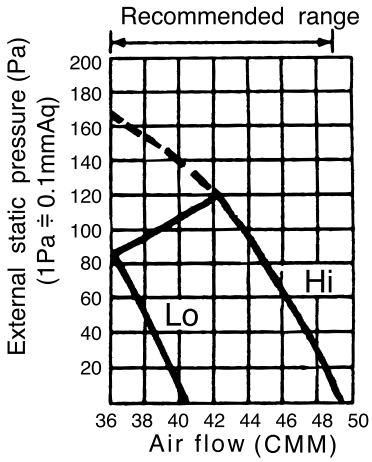

Corrected Air Flow

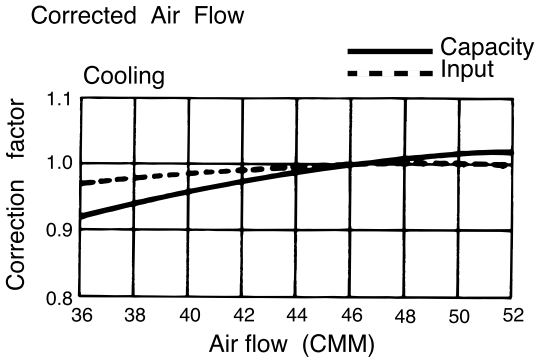

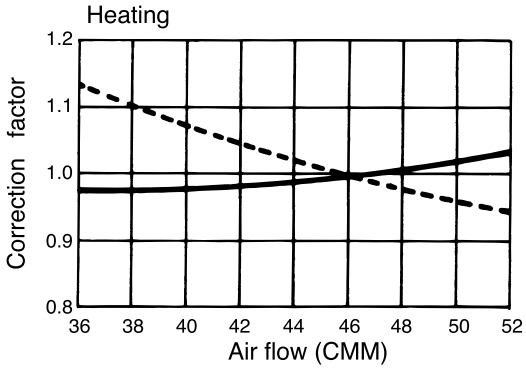

PEAD-RP2.5GA

Fan performance <220V>

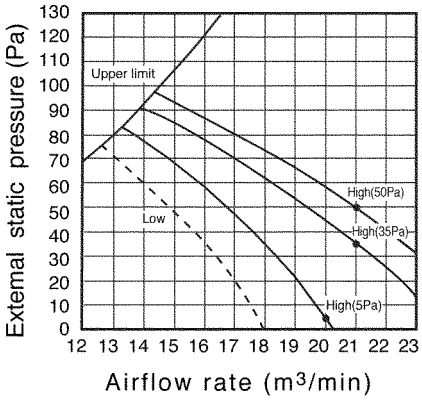

Fan performance <230V>

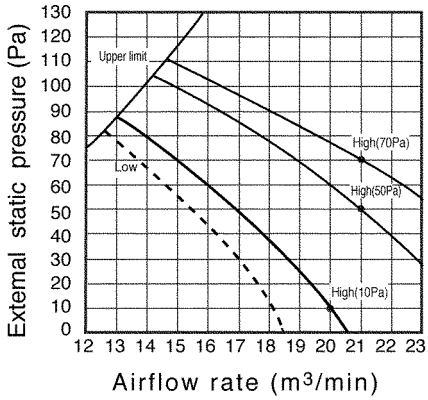

Fan performance <240V>

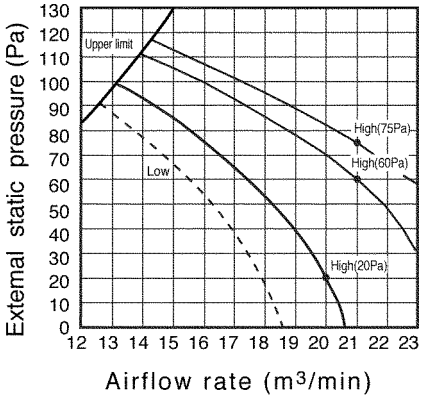

Corrected air flow

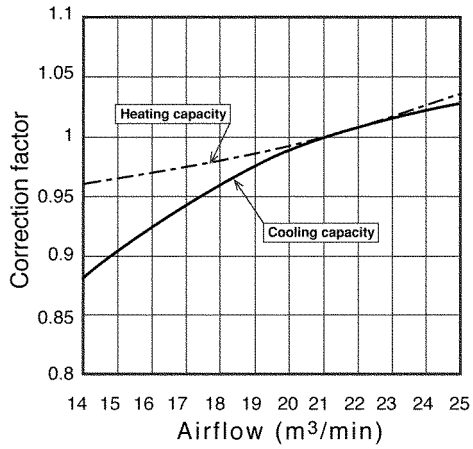

PEAD-RP3GA

Fan performance <220V>

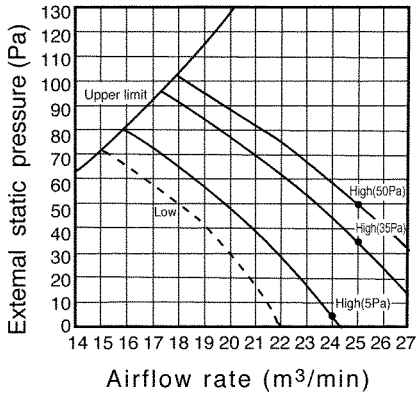

Fan performance <230V>

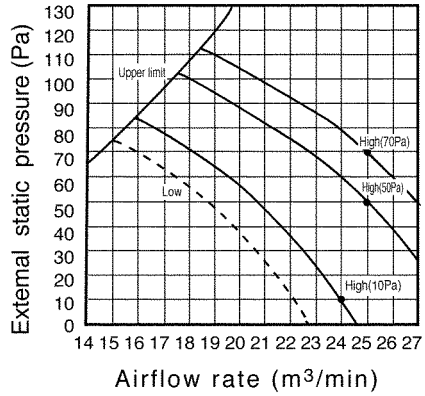

Fan performance <240V>

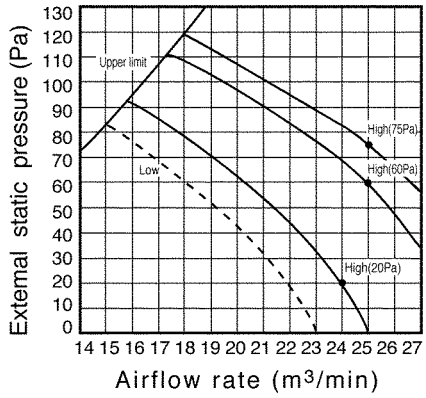

Corrected air flow

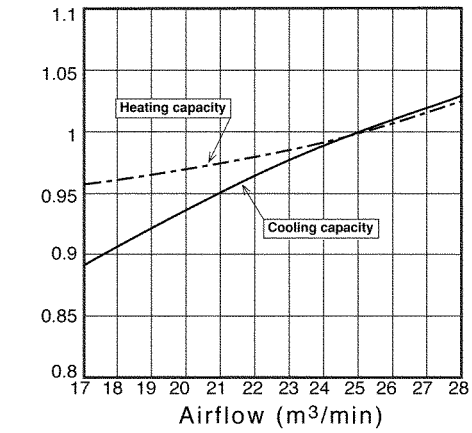

PEAD-RP4GA

Fan performance <220V>

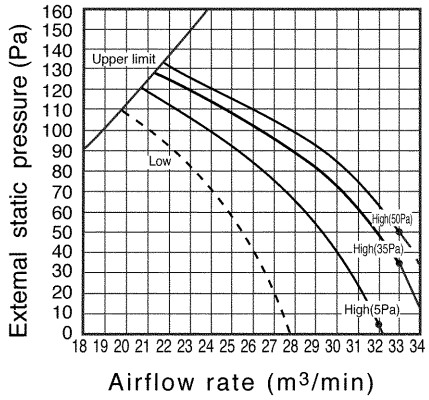

Fan performance <230V>

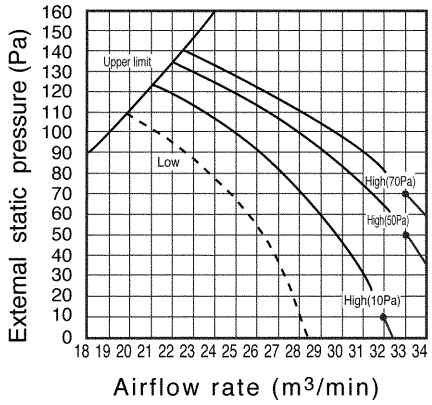

Fan performance <240V>

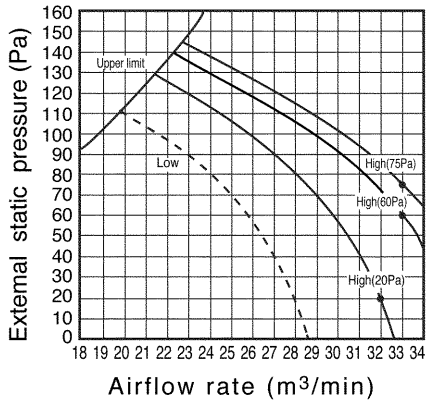

Corrected air flow

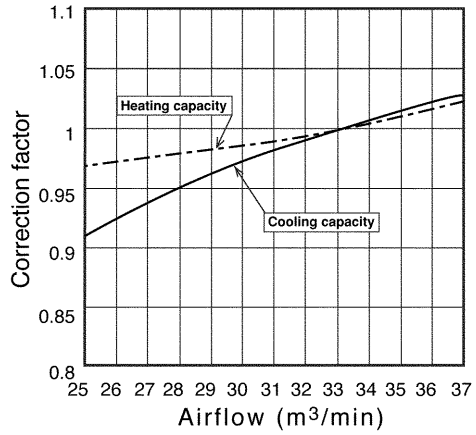

A.4.8 NOISE CRITERIA CURVES

Ceiling concealed

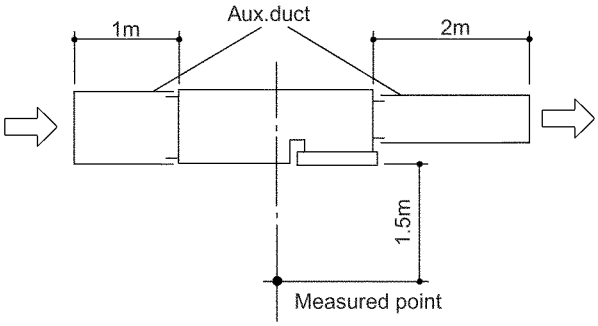

Noise level at anechoic room (Low-High) Unit : dB(A)

Model	External static pressure		
	30Pa	70Pa	130Pa
PEAD-RP1.6EA	34-38	36-43	-
PEAD-RP2EA	36-40	38-44	-
PEAD-RP2.5EA	37-41	39-46	-
PEAD-RP3EA	-	37-41	40-45 ✻
PEAD-RP4EA	-	41-46	42-48 ✻
PEAD-RP5EA	-	44-50	46-52 ✻
PEAD-RP6EA	-	46-51	47-53 ✻

✻ Optional motor

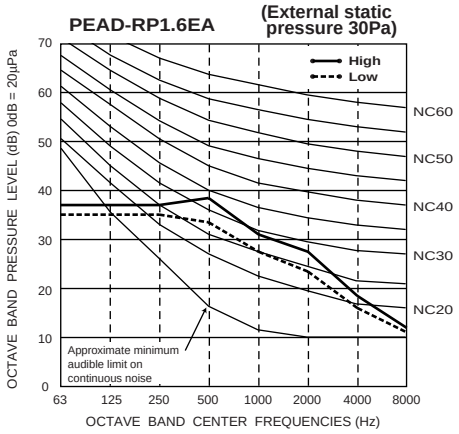

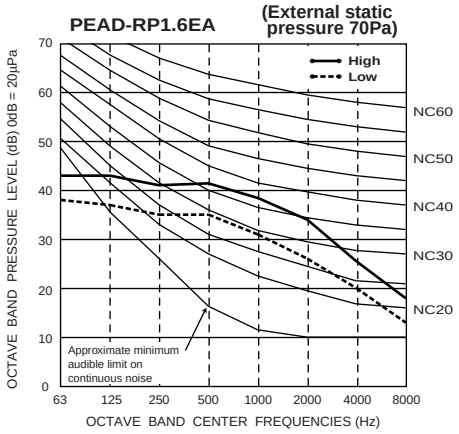

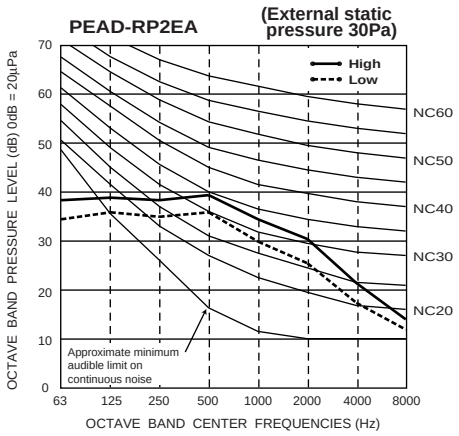

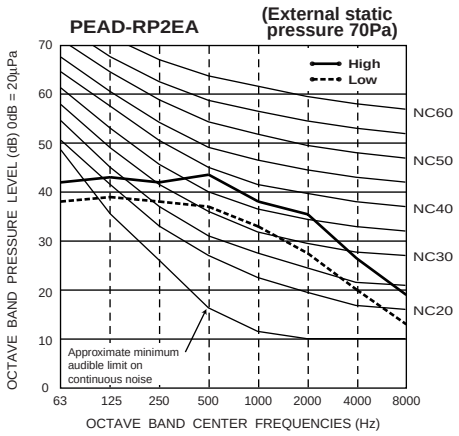

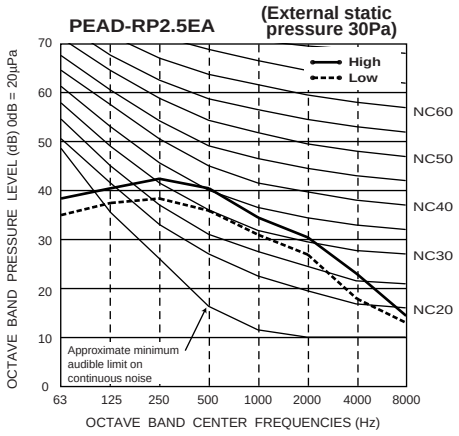

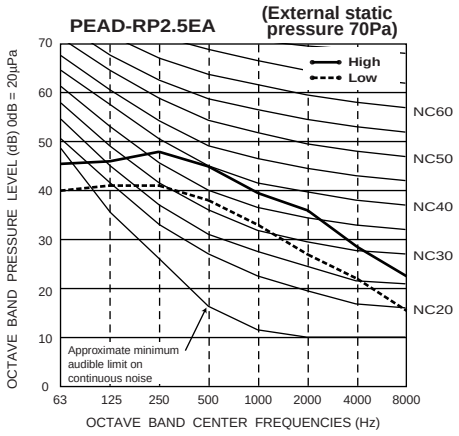

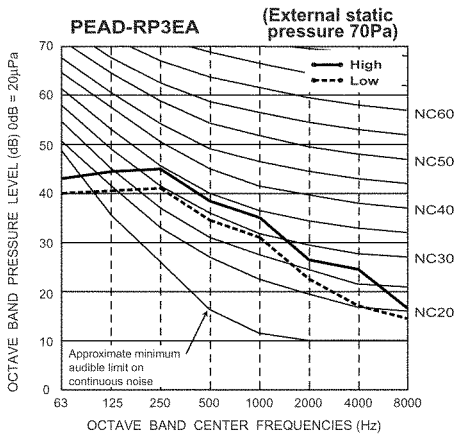
PEAD-RP3EA
(External static pressure 70Pa)
High
Low
NC60
NC50
NC40
NC30
NC20
Approximate minimum audible limit on continuous noise
OCTAVE BAND PRESSURE LEVEL (dB) 0dB = 20μPa
OCTAVE BAND CENTER FREQUENCIES (Hz)

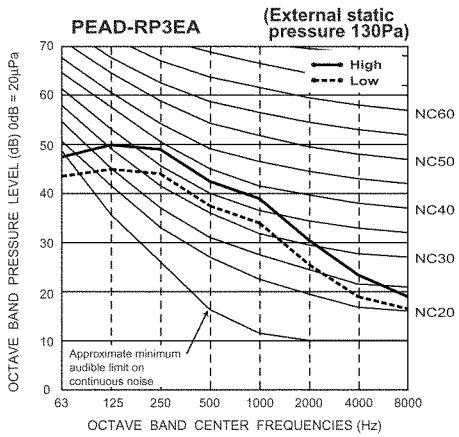
PEAD-RP3EA
(External static pressure 130Pa)
High
Low
NC60
NC50
NC40
NC30
NC20
Approximate minimum audible limit on continuous noise
OCTAVE BAND PRESSURE LEVEL (dB) 0dB = 20μPa
OCTAVE BAND CENTER FREQUENCIES (Hz)

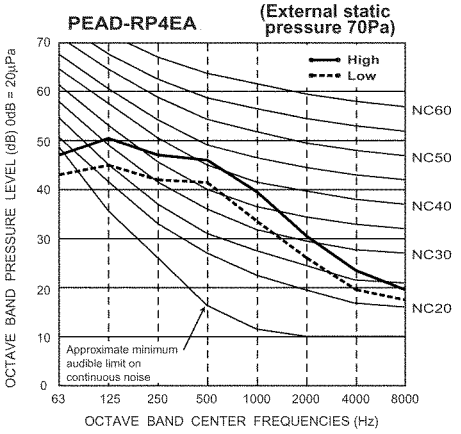
PEAD-RP4EA
(External static pressure 70Pa)
High
Low
NC60
NC50
NC40
NC30
NC20
Approximate minimum audible limit on continuous noise
OCTAVE BAND PRESSURE LEVEL (dB) 0dB = 20μPa
OCTAVE BAND CENTER FREQUENCIES (Hz)

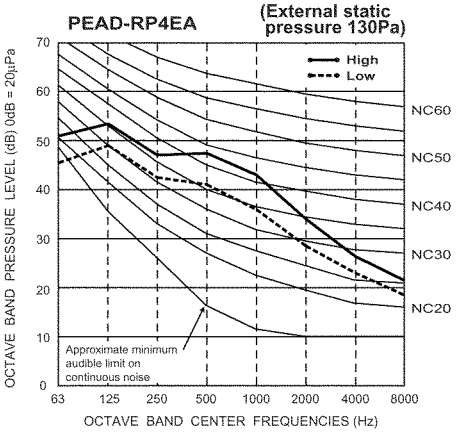
PEAD-RP4EA
(External static pressure 130Pa)
High
Low
NC60
NC50
NC40
NC30
NC20
Approximate minimum audible limit on continuous noise
OCTAVE BAND PRESSURE LEVEL (dB) 0dB = 20μPa
OCTAVE BAND CENTER FREQUENCIES (Hz)

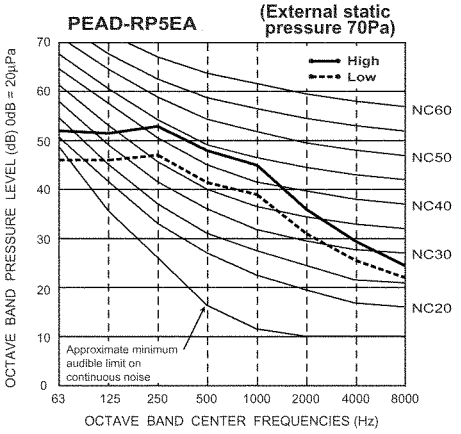
PEAD-RP5EA
(External static pressure 70Pa)
High
Low
NC60
NC50
NC40
NC30
NC20
Approximate minimum audible limit on continuous noise
OCTAVE BAND PRESSURE LEVEL (dB) 0dB = 20μPa
OCTAVE BAND CENTER FREQUENCIES (Hz)

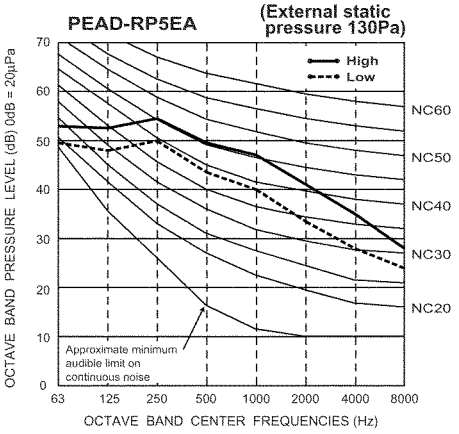
PEAD-RP5EA
(External static pressure 130Pa)
High
Low
NC60
NC50
NC40
NC30
NC20
Approximate minimum audible limit on continuous noise
OCTAVE BAND PRESSURE LEVEL (dB) 0dB = 20μPa
OCTAVE BAND CENTER FREQUENCIES (Hz)

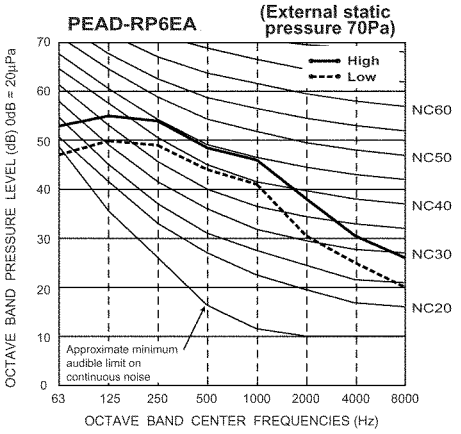
PEAD-RP6EA
(External static pressure 70Pa)
High
Low
NC60
NC50
NC40
NC30
NC20
Approximate minimum audible limit on continuous noise
OCTAVE BAND PRESSURE LEVEL (dB) 0dB = 20μPa
OCTAVE BAND CENTER FREQUENCIES (Hz)

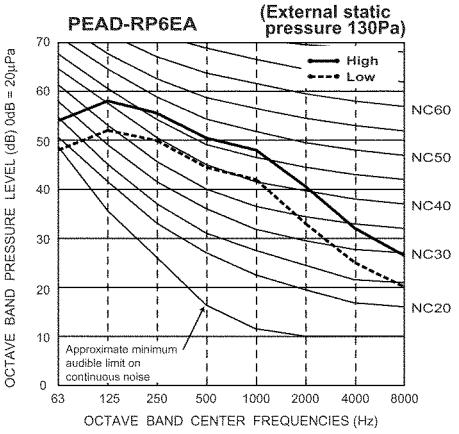
PEAD-RP6EA
(External static pressure 130Pa)
High
Low
NC60
NC50
NC40
NC30
NC20
Approximate minimum audible limit on continuous noise
OCTAVE BAND PRESSURE LEVEL (dB) 0dB = 20μPa
OCTAVE BAND CENTER FREQUENCIES (Hz)

A.4.9 REMOTE CONTROLLER

On the controls are set, the same operation mode can be repeated by simply pressing the ON/OFF button.

● Operation buttons

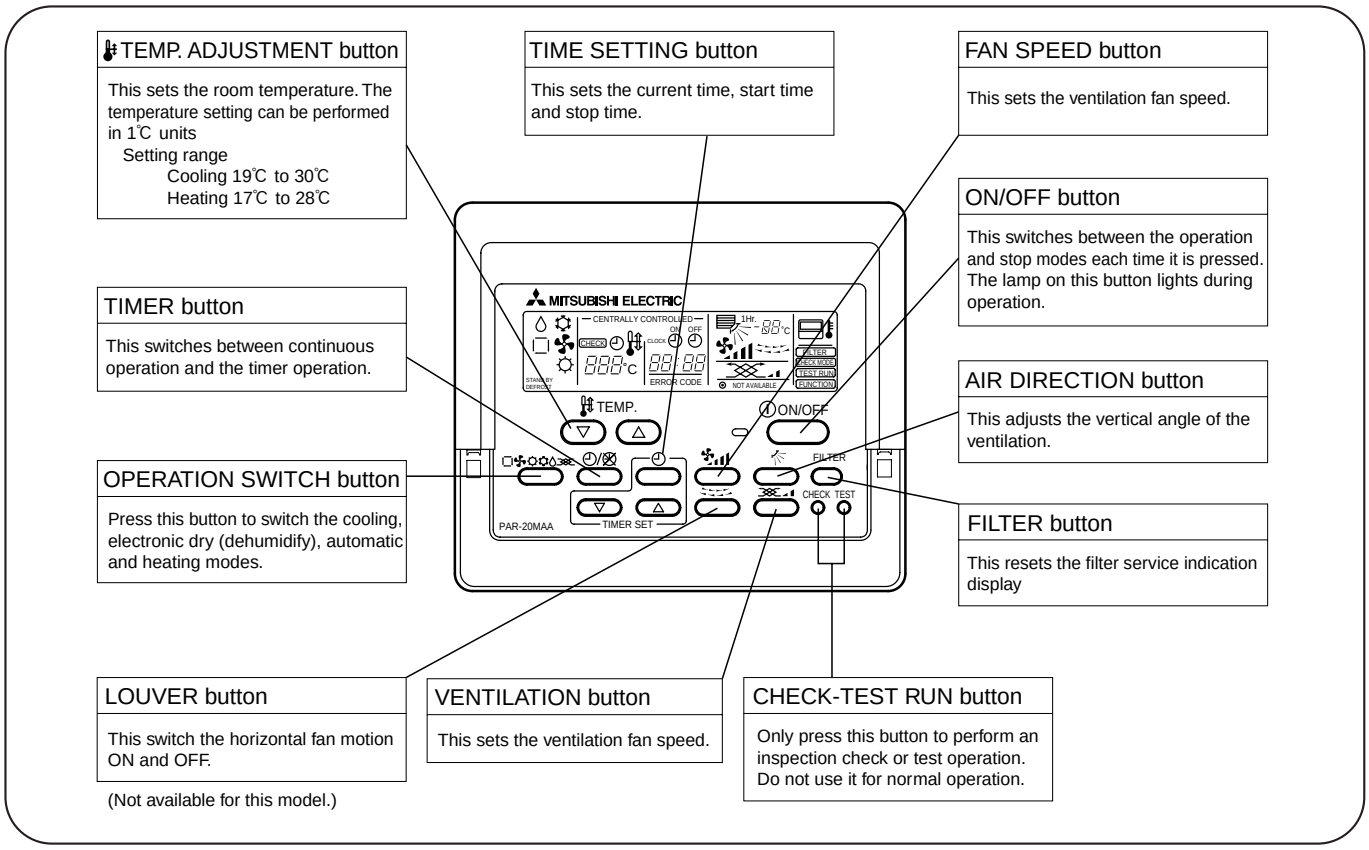

● Display

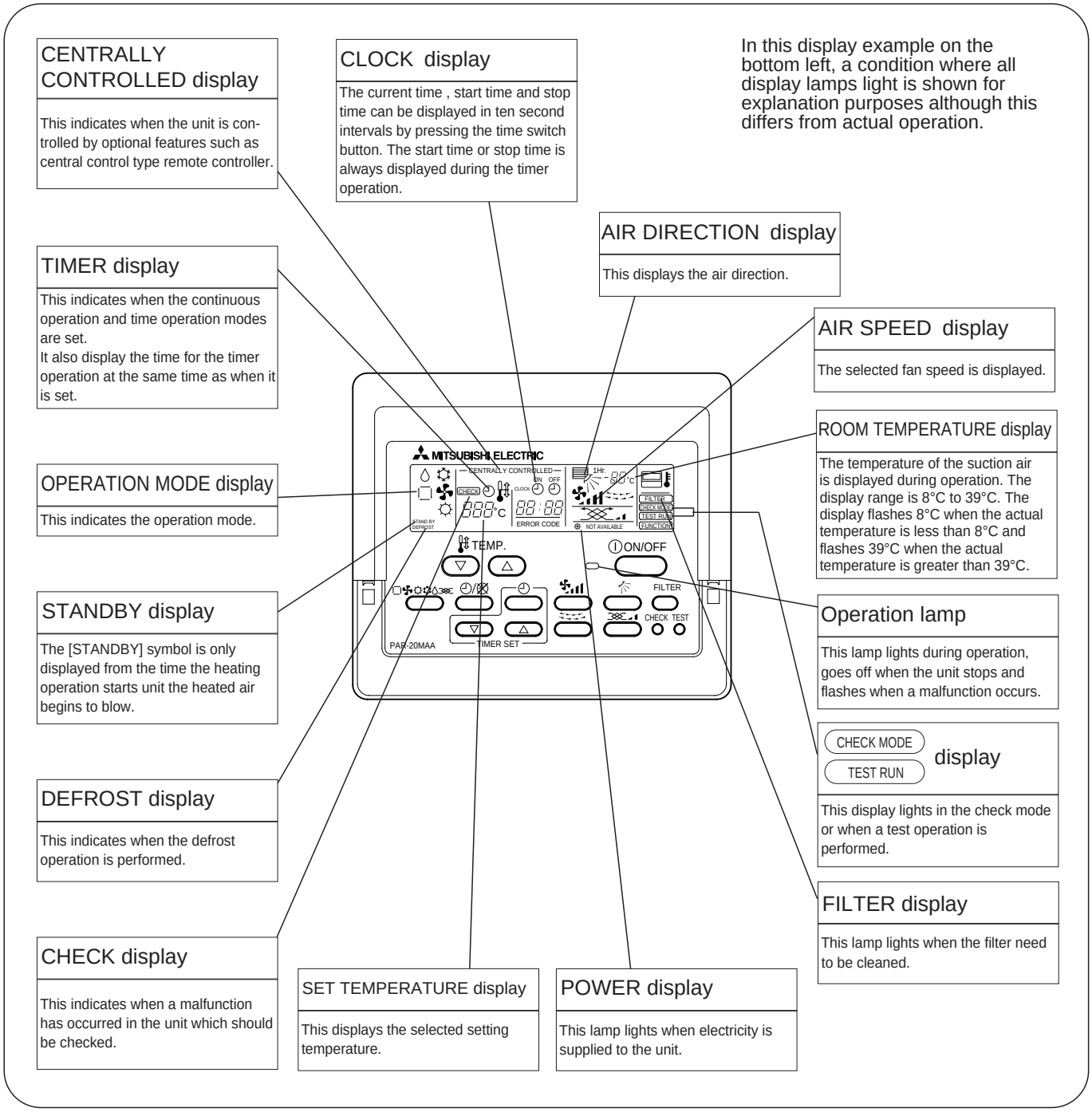

Caution

- Only the Power display lights when the unit is stopped and power supplied to the unit.
- When the central control remote control unit, which is sold separately, is used the ON-OFF button, operation switch button and TEMP. adjustment button do not operate.
- “NOT AVAILABLE” is displayed when the Air speed button are pressed.This indicates that this room unit is not equipped with the fan direction adjustment function and the louver function.
- When power is turned ON for the first time, it is normal that “H0” is displayed on the room temperature indication (For max. 2minutes). Please wait until this “H0” indication disappear then start the operation.

A.4.10 TROUBLESHOOTING

Before you call out a repair man, check the following table to see whether there is a simple solution to your problem.

Problem	Solution	Problem	Solution
Unit does not cool or heat very well.	Clean the filter.	The start and stop functions are not available just after restarting the unit.	Wait about three minutes (operation has stopped to prevent damage to the air conditioner).
The unit stops operating before arriving at the set temperature in the heating mode.	Frost forms when the outdoor temperature is low and humidity is high. Wait for about 10 minutes for the frost to melt.	"H0" is displayed in the remote controller.	An automatic startup test is being performed (will last for about three minutes).
A white mist is expelled from the indoor unit.	This may occur just after the unit is turned on when a high level of humidity is present in the room.	An error code is displayed in the remote controller. The operating display of the wireless remote controller's receiver is flashing.	A self-diagnostic function is being performed to preserve the air conditioner. * Do not attempt to make repairs yourself. Turn the main switch off and contact the dealer from whom you bought the air conditioner. Provide him or her with the name of the unit and the information displayed in the remote controller.
The indicators of the remote controller do not light up when operated.	Turn on the power switch. "⊙" will be displayed.		
CENTRALLY CONTROLLED is displayed in the remote controller.	The start and stop functions of the remote controller are not available when the CENTRALLY CONTROLLED message is lit.		

NOTE: After a power cut, the unit will not restart automatically. You will have to restart it by pressing the POWER - ON/OFF button on the remote controller.

If none of the above apply, turn the main switch off and contact the dealer from whom you bought the air-conditioner, telling him the model name and the nature of the problem. Do not try to fix the unit yourself.

In any of the following cases, turn off the main power switch and contact your local dealer for service:

- The operation lamp (on the main unit) flashes.
- The switches do not work properly.
- The circuit breaker trips frequently (or the fuse blows frequently).
- Water has accidentally been splashed into the unit.
- Water leaks from the unit.
- Something is accidentally dropped into the air-conditioner.
- An unusual noise is heard during operation.

Operating range

		Indoor air intake temperature	Outdoor air intake temperature
Cooling	Maximum	35 °C DB, 22.5 °C WB	46 °C DB
	Minimum	19 °C DB, 15 °C WB	–5 °C DB
Heating	Maximum	28 °C DB	21 °C DB, 15 °C WB
	Minimum	17 °C DB	–11 °C DB, –12 °C WB

The following do not indicate any malfunction:

Odours: smells such as tobacco or cosmetic odours may persist after they have been sucked into the unit.
Sound of liquid flowing inside indoor unit: this can occur during or after operation and is simply the sound of refrigerant being circulated inside the unit.
Ticking sound coming from indoor unit: this can occur when cooling or heating has just begun or has just stopped. It is caused by the indoor unit shrinking or expanding slightly due to the change in temperature.
The message "CENTRALLY CONTROLLED" appearing on the LCD panel: from time to time, this message may come up on the LCD panel. This does not indicate any malfunction.

A.4.11 INSTALLATION PROCEDURE

2

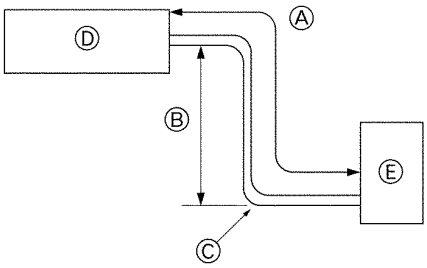

Fig. 2-1

3

(mm)

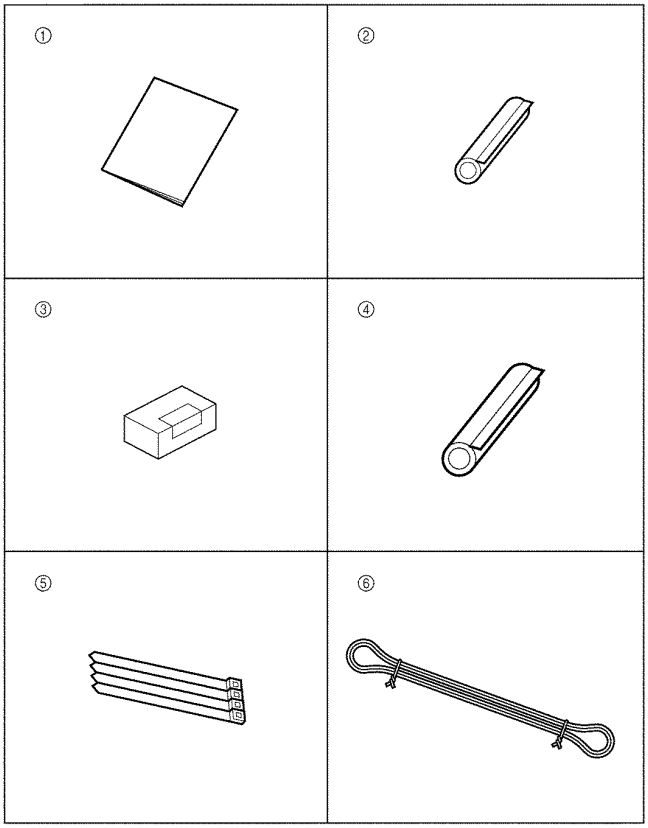

Fig. 3-1

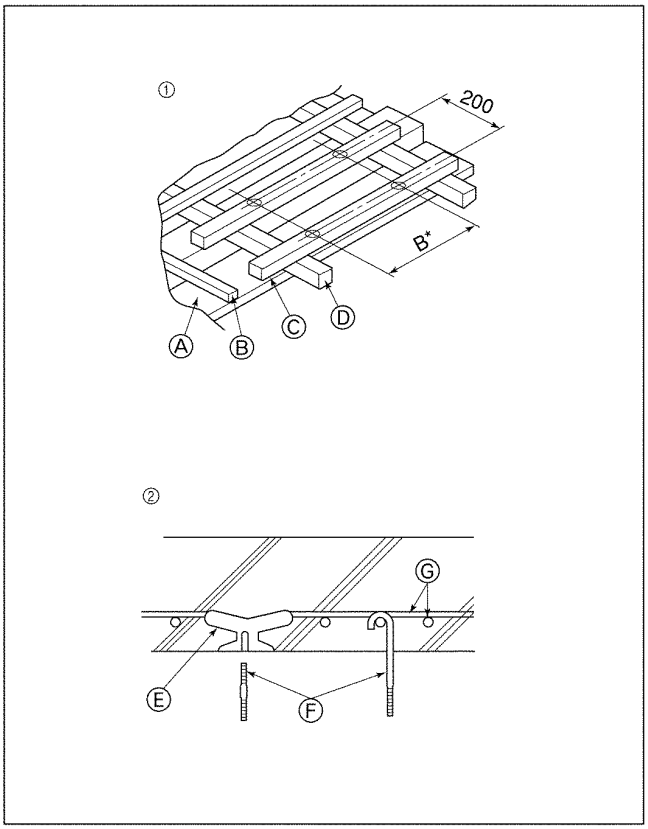

Fig. 3-2

4

(mm)

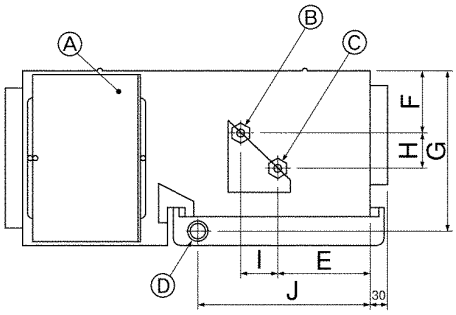

Fig. 4-1

5

(mm)

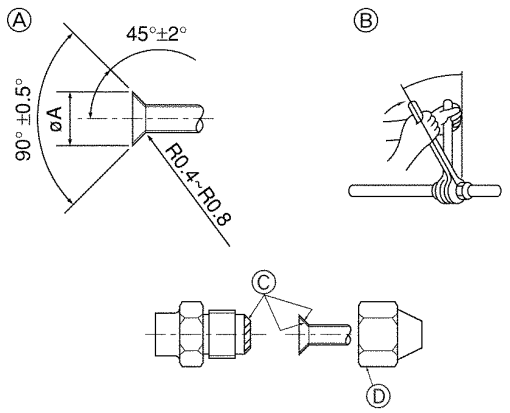

Fig. 5-1

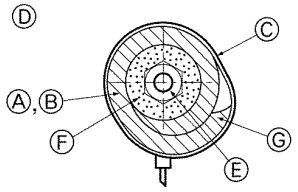

Fig. 5-2

6

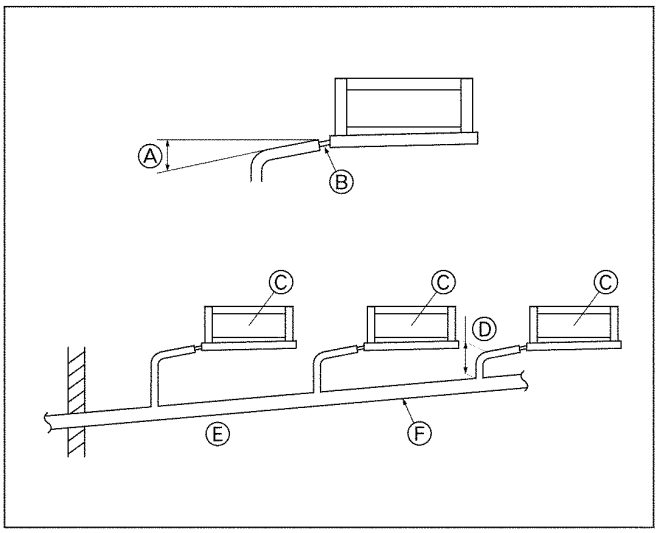

Fig. 6-1

7

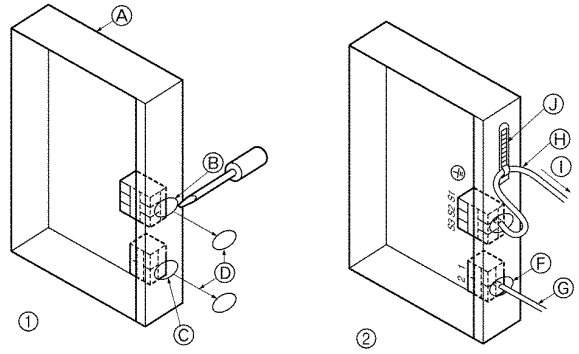

<A> In case of RP·EA

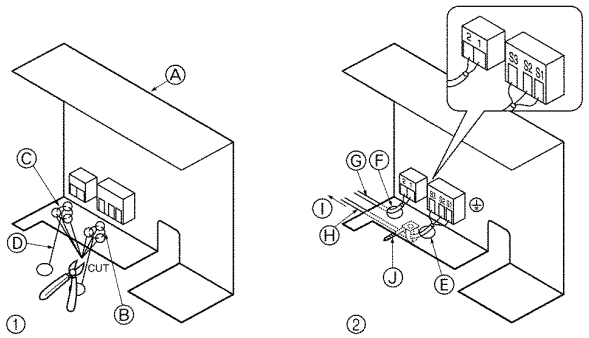

<B> In case of RP·GA

Fig. 7-1

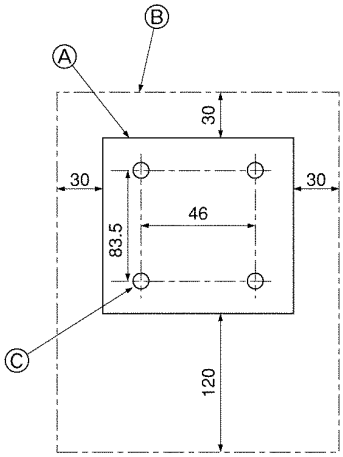

Fig. 7-2

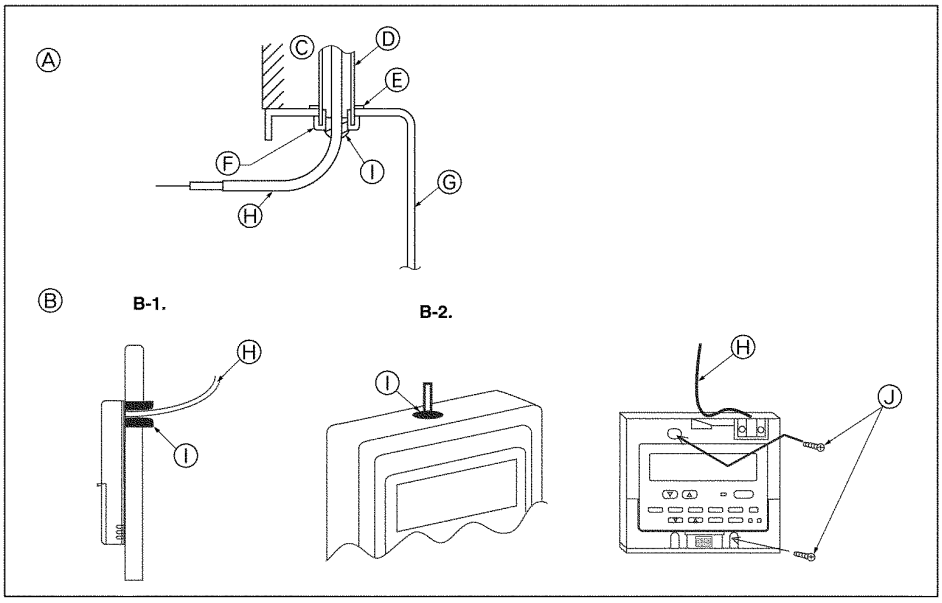

Fig. 7-3

7

(mm)

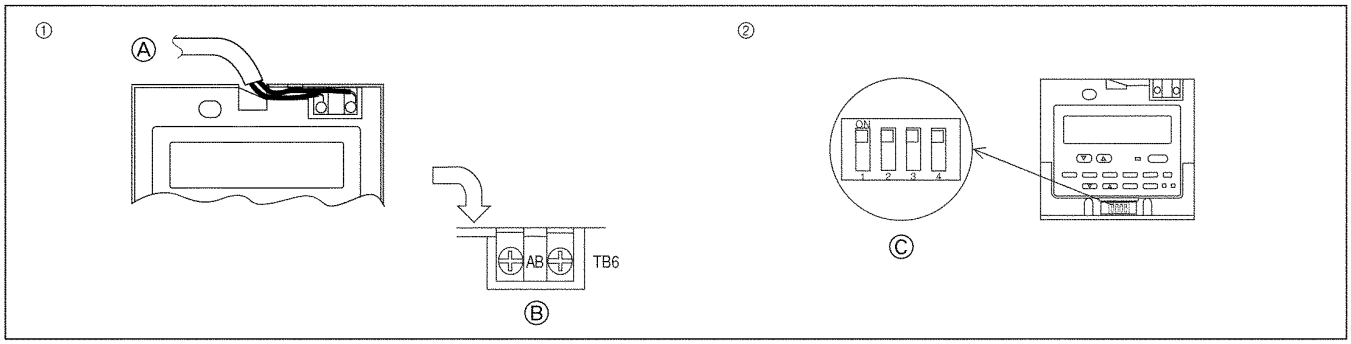

Fig. 7-4

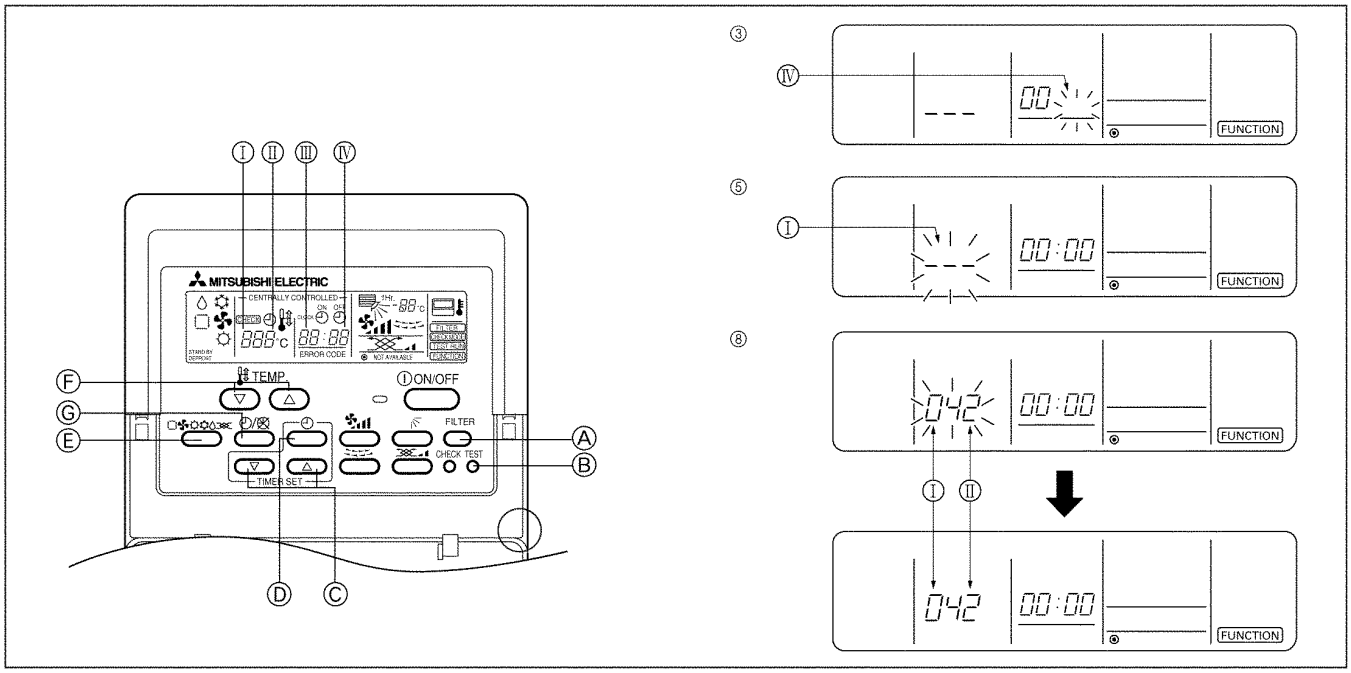

Fig. 7-5

8

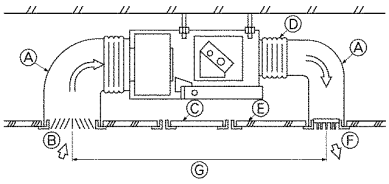

<A> In case of rear inlet

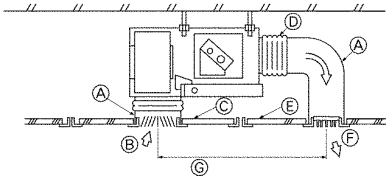

<B> In case of bottom inlet

Fig. 8-1

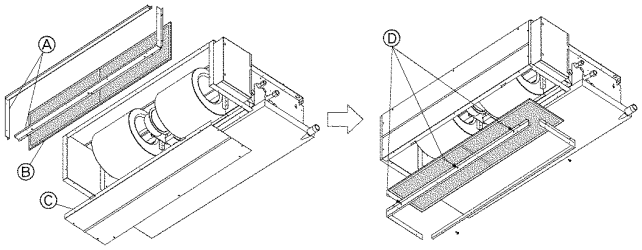

Fig. 8-2

9

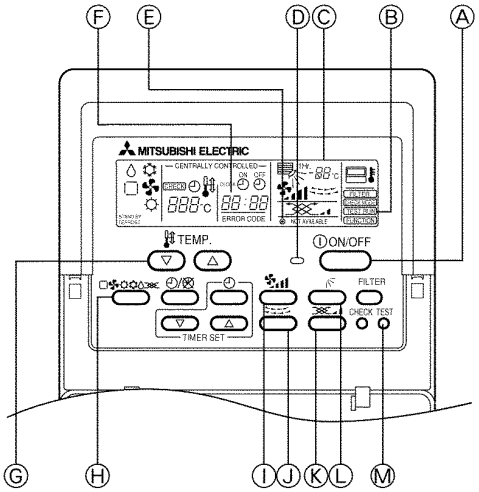

Fig. 9-1

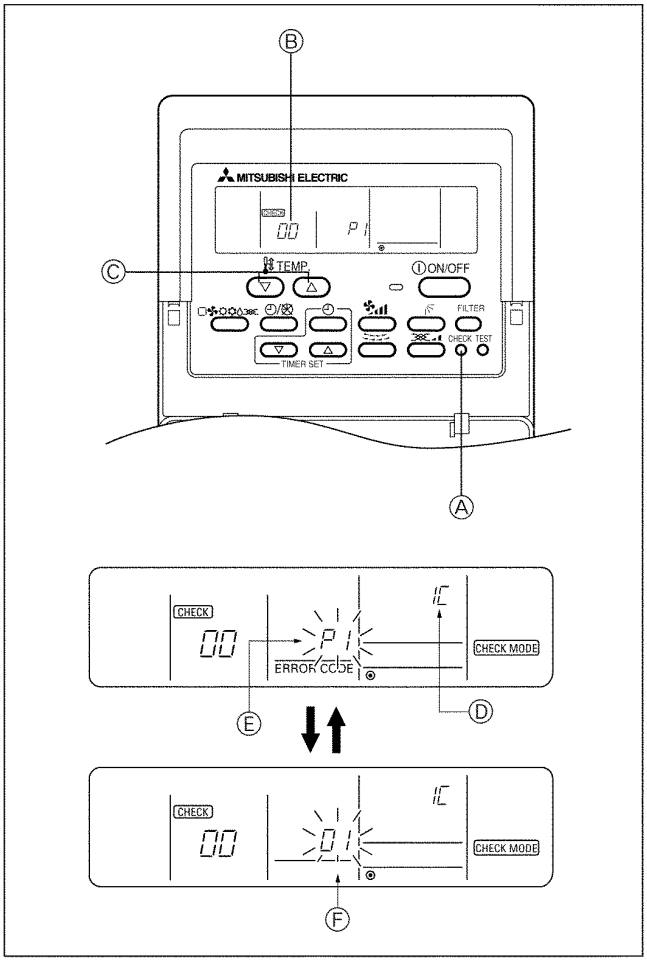

Fig. 9-2

1. Safety precautions

▶ **Before installing the unit, make sure you read all the "Safety precautions".**
▶ **Please report to or take consent by the supply authority before connection to the system.**

⚠ **Warning:**
Describes precautions that must be observed to prevent danger of injury or death to the user.

⚠ **Caution:**
Describes precautions that must be observed to prevent damage to the unit.

After installation work has been completed, explain the "Safety Precautions," use, and maintenance of the unit to the customer according to the information in the Operation Manual and perform the test run to ensure normal operation. Both the Installation Manual and Operation Manual must be given to the user for keeping. These manuals must be passed on to subsequent users.

⃠ : Indicates an action that must be avoided.

❗ : Indicates that important instructions must be followed.

⏚ : Indicates a part which must be grounded.

⚠ : Indicates that caution should be taken with rotating parts.

⚠ : Beware of electric shock.

⚠ **Warning:**
Carefully read the labels affixed to the main unit.

⚠ **Warning:**
- **Ask a dealer or an authorized technician to install the unit.**
- **For installation work, follow the instructions in the Installation Manual and use tools and pipe components specifically made for use with refrigerant specified in the outdoor unit installation manual.**
- **The unit must be securely installed on a structure that can sustain its weight.**
- **If the air conditioner is installed in a small room, measures must be taken to prevent the refrigerant concentration in the room from exceeding the safety limit in the event of refrigerant leakage. Should the refrigerant leak and cause the concentration limit to be exceeded, hazards due to lack of oxygen in the room may result.**
- **Ventilate the room if refrigerant leaks during operation. If refrigerant comes into contact with a flame, poisonous gases will be released.**
- **All electric work must be performed by a qualified technician according to local regulations and the instructions given in this manual.**
- **Use only specified cables for wiring.**
- **The control box cover of the unit must be firmly attached.**
- **Use only accessories authorized by Mitsubishi Electric and ask a dealer or an authorized technician to install them.**
- **The user should never attempt to repair the unit or transfer it to another location.**
- **After installation has been completed, check for refrigerant leaks. If refrigerant leaks into the room and comes into contact with the flame of a heater or portable cooking range, poisonous gases will be released.**
- **Do not turn on the power until installation has been completed.**
- **When handling this product, always wear protective equipment.**
  EG: Gloves, full arm protection namely boiler suit, and safety glasses.
  - Improper handling may result in injury.

1.1. Before installation (Environment)

⚠ **Caution:**
- **Do not use the unit in an unusual environment. If the air conditioner is installed in areas exposed to steam, volatile oil (including machine oil), or sulfuric gas, areas exposed to high salt content such as the seaside, the performance can be significantly reduced and the internal parts can be damaged.**

2. Installation location

- **Do not install the unit where combustible gases may leak, be produced, flow, or accumulate. If combustible gas accumulates around the unit, fire or explosion may result.**
- **Do not keep food, plants, caged pets, artwork, or precision instruments in the direct airflow of the indoor unit or too close to the unit, as these items can be damaged by temperature changes or dripping water.**
- **When the room humidity exceeds 80% or when the drainpipe is clogged, water may drip from the indoor unit. Do not install the indoor unit where such dripping can cause damage.**
- **When installing the unit in a hospital or communications office, be prepared for noise and electronic interference. Inverters, home appliances, high-frequency medical equipment, and radio communications equipment can cause the air conditioner to malfunction or breakdown. The air conditioner may also affect medical equipment, disturbing medical care, and communications equipment, harming the screen display quality.**

1.2. Before installation or relocation

⚠ **Caution:**
- **Be extremely careful when transporting the units. Two or more persons are needed to handle the unit, as it weighs 20 kg or more. Do not grasp the packaging bands. Wear protective gloves, as you can injure your hands on the fins or other parts.**
- **Be sure to safely dispose of the packaging materials. Packaging materials, such as nails and other metal or wooden parts may cause stabs or other injuries, also tear plastic bags before disposal.**
- **Thermal insulation of the refrigerant pipe is necessary to prevent condensation. If the refrigerant pipe is not properly insulated, condensation will be formed.**
- **Place thermal insulation on the pipes to prevent condensation. If the drainpipe is installed incorrectly, water leakage and damage to the ceiling, floor, furniture, or other possessions may result.**
- **Do not clean the air conditioner unit with water. Electric shock may result.**
- **Tighten all flare nuts to specification using a torque wrench. If tightened too much, the flare nut can break after an extended period.**
- **The indoor models should be installed in the ceiling over 2.5 m from floor.**

1.3. Before electric work

⚠ **Caution:**
- **Be sure to install circuit breakers. If not installed, electric shock may result.**
- **For the power lines, use standard cables of sufficient capacity. Otherwise, a short circuit, overheating, or fire may result.**
- **When installing the power lines, do not apply tension to the cables.**
- **Be sure to ground the unit. If the unit is not properly grounded, electric shock may result.**
- **Use circuit breakers (ground fault interrupter, isolating switch (+B fuse), and molded case circuit breaker) with the specified capacity. If the circuit breaker capacity is larger than the specified capacity, breakdown or fire may result.**

1.4. Before starting the test run

⚠ **Caution:**
- **Turn on the main power switch more than 12 hours before starting operation. Starting operation just after turning on the power switch can severely damage the internal parts.**
- **Before starting operation, check that all panels, guards and other protective parts are correctly installed. Rotating, hot, or high voltage parts can cause injuries.**
- **Do not operate the air conditioner without the air filter set in place. If the air filter is not installed, dust may accumulate and breakdown may result.**
- **Do not touch any switch with wet hands. Electric shock may result.**
- **Do not touch the refrigerant pipes with bare hands during operation.**
- **After stopping operation, be sure to wait at least five minutes before turning off the main power switch. Otherwise, water leakage or breakdown may result.**

2.1. Refrigerant pipe (Fig. 2-1)

- Refer to the outdoor unit installation manual regarding to the followings:
  - Ⓐ Pipe length
  - Ⓑ Height
  - Ⓒ Number of bends (one way)
  - Ⓓ Indoor unit
  - Ⓔ Outdoor unit

3. Installing the indoor unit
4. Installing the pipes

3.1. Check the indoor unit accessories (Fig. 3-1)

The indoor unit should be supplied with the following accessories.

	Accessory name	Q'ty
①	Piping instruction	1pc.
②	Insulation pipe	1pc.
③	Remote controller parts	1pc.
④	Insulation pipe	1pc.
⑤	Band	4pcs.
⑥	Cord	1pc.

3.2. Suspension bolt installation (Give site of suspension strong structure) (Fig. 3-2)

① Wooden structure
- Select tie beam (one-story building) or second-floor girder (two-story buildings) as reinforcement member.
- Use sturdy beams of at least 6cm square for beam pitch of 90cm or less or of at least 9cm square for beam pitch of 90-180cm.

Ⓐ Ceiling Ⓑ Rafter Ⓒ Beam Ⓓ Roof beam

② Ferro-concrete structures
Secure the suspension bolts using the method shown, or use steel or wooden hangers, etc. to install the suspension bolts.

Ⓔ Use inserts rated at 100-150 kg each (procure locally)
Ⓕ Suspension bolts M10 (3/8") (procure locally)
Ⓖ Steel reinforcing rod

Installing the suspension bolts
- Check the pitch of the suspension bolts.
- Use the ø10 (3/8") suspension bolts (×4, obtain locally).
- Adhere strictly to the length of the suspension bolts (specified figure below).

3.3. Carry-in/Installation of indoor unit

- Carry in indoor unit to the installation site without unpacking.
- Install indoor unit before mounting ceiling surface material.
- Lift unit body with a lifting machine, and suspend it through suspension bolt.
- Be sure to install indoor unit horizontally. Installing it in slant may cause drain water leak.
- Check unit for horizontal installation with a level gauge, and if slanted, re-adjust it by loosening the nut holding suspension fixtures.

4.1. Refrigerant and drainage piping locations of indoor unit

1.For the limitation of piping length and the allowable height difference, refer to the instruction manual of outdoor unit.
2.The connection method of piping is of flare connection. (Fig. 4-1)

Ⓐ Electrical parts box
Ⓑ Refrigerant piping (liquid)
Ⓒ Refrigerant piping (gas)
Ⓓ Drain piping

	E	F	G	H	I	J
RP1.6, 2, 2.5 EA	227	80	277	45	61	17
RP3, 4, 5, 6 EA	169	122	308	46	53	323
RP2.5, 3, 4 GA	237	87	258	33	46	179

5. Refrigerant piping work

5.1. Refrigerant and drainage piping connection (Fig. 5-1)

- When commercially available copper pipes are used, wrap liquid and gas pipes with commercially available insulation materials (heat-resistant to 100 °C or more, thickness of 12 mm or more).
- The indoor parts of the drain pipe should be wrapped with polyethylene foam insulation materials (specific gravity of 0.03, thickness of 9 mm or more).
- Apply thin layer of refrigerant oil to pipe and joint seating surface before tightening flare nut.
- Use torque wrench and spanner to tighten piping connections.
- Use refrigerant piping insulation provided to insulate indoor unit connections. Insulate carefully.

Ⓐ Flare cutting dimensions

Copper pipe O.D. (mm)	Flare dimensions øA dimensions (mm)
ø6.35	8.7 - 9.1
ø9.52	12.8 - 13.2
ø12.7	16.2 - 16.6
ø15.88	19.3 - 19.7
ø19.05	23.6 - 24.0

Ⓑ Flare nut tightening torque

Copper pipe O.D. (mm)	Flare nut O.D. (mm)	Tightening torque (N·m)
ø6.35	17	14 - 18
ø6.35	22	34 - 42
ø9.52	22	34 - 42
ø12.7	26	49 - 61
ø12.7	29	68 - 82
ø15.88	29	68 - 82
ø15.88	36	100 - 120
ø19.05	36	100 - 120

Ⓒ Apply refrigerating machine oil over the entire flare seat surface.
Ⓓ Use the flare nuts as follows.

Indoor unit		RP1.6, 2	RP2.5, 3	RP4 - 6
Refrigerant		R407C		
Joint outdoor unit		PU(H)-P1.6/2	PU(H)-P2.5/3	PU(H)-P4/5/6
Gas side	Pipe size (mm)	ø15.88	ø15.88	ø19.05
	Indoor unit	*1	*1	*1
	Outdoorunit	*1	*1	*1
Liquid side	Pipe size (mm)	ø9.52	ø9.52	ø9.52
	Indoor unit	*1	*1	*1
	Outdoorunit	*1	*1	*1

Indoor unit		RP1.6, 2	RP2.5, 3	RP4 - 6
Refrigerant		R410A		
Joint outdoor unit		PUHZ-RP1.6/2	PUHZ-RP2.5/3	PUHZ-RP4/5/6
Gas side	Pipe size (mm)	ø12.7	ø15.88	ø15.88
	Indoor unit	*2	*1	*2
	Outdoorunit	*1	*1	*1
Liquid side	Pipe size (mm)	ø6.35	ø9.52	ø9.52
	Indoor unit	*2	*1	*1
	Outdoorunit	*1	*1	*1

*1: The flare nut is attached to its pipe.
*2: The flare nut is in the outdoor unit accessory.
Do not use the flare nut attached. If it is used, a gas leakage or even a pipe extraction may occur.

Refer to the outdoor unit installation manual for the specification of connecting pipes.

5.2. Indoor unit (Fig. 5-2)

Heat insulation for refrigerant pipes:

① Wrap the large pipe cover around the gas pipe, making sure that the end of the pipe cover touches the side of the unit.
② Wrap the small pipe cover around the liquid pipe, making sure that the end of the pipe cover touches the side of the unit.
③ Secure both ends of each pipe cover with the enclosed bands. (Attach the bands 20 mm from the ends of the pipe cover.)

Ⓐ Pipe cover (large)
Ⓑ Pipe cover (small)
Ⓒ Band
Ⓓ Cross-sectional view of connection
Ⓔ Pipe
Ⓕ Insulating material
Ⓖ Squeeze

5. Refrigerant piping work
6. Drainage piping work
7. Electrical work

- After connecting the refrigerant piping to the indoor unit, be sure to test the pipe connections for gas leakage with nitrogen gas. (Check that there is no leakage from the refrigerant piping to the indoor unit.)

5.3. For twin/triple combination

Refer to the outdoor unit installation manual.

6.1. Drainage piping work (Fig. 6-1)

1. For drain piping, provide a downward slope of 1/100 or more to the water outlet and do not provide any trap or rising section on the way.
2. Keep the horizontal length of drain piping less than 20 m (not including the height difference).
   For long drain piping, provide a metal support, fixture on the way to eliminate the waving of the piping. Never install an air vent pipe. Otherwise, drain may blow out.
3. For drain piping, use the PVC pipe VP-25 (outside diameter ø32).
4. For collective drain piping, arrange the piping to 10 cm lower than the unit drain outlet.
5. Insulate the drain pipe with insulating material as 5.1.
6. Locate the outlet of drain piping so that it will not generate odor.
7. Do not connect drain piping directly to sewer system as this may generate sulfur gas.
   - Ⓐ Downward slope 1/100 or more
   - Ⓑ Connection dia 25A external thread
   - Ⓒ Indoor unit
   - Ⓓ Maximize this length to approx. 10 cm
   - Ⓔ Collective piping
   - Ⓕ Downward slope 1/100 or more

7.1. Indoor unit (Fig. 7-1)

<A> In case of RP·EA
<B> In case of RP·GA

Field wiring method

① Open knockout holes.
(Recommend to use a screwdriver or the like for this work.)

Ⓐ Control box Ⓒ Knockout hole
Ⓑ Knockout hole Ⓓ Remove

② Fix the power source, transmission wiring (3 × 2.5 mm²: polar) to control box by using buffer bushing for tensile force. (PG connection or the like.) Secure the wiring Ⓗ with the tie wrap Ⓙ. Connect the remote controller wiring to terminal block through the knockout hole of control box using ordinary bushing.

- Ⓔ To prevent external tensile force from applying to the wiring connection section of power source terminal block use buffer bushing like PG connection or the like.
- Ⓕ Use ordinary bushing
- Ⓖ Remote controller
- Ⓗ Indoor/Outdoor unit connecting wiring
- Ⓘ Tensile force
- Ⓙ Tie wrap

▶ **Selecting non-fuse breaker (NF) or earth leakage breaker (NV).**
▶ **Always install an earth. (Earth cable size: Thicker than 2.5 mm²)**
▶ **Power supply cords Ⓗ of appliances shall not be lighter than design 245 IEC57 or 227 IEC 57.**

Field electrical wiring

Indoor unit model			PEAD
Indoor unit power supply (Heater)			–
Indoor unit input capacity (Heater) Main switch (Breaker)		*1	–
Wiring Wire No. × size (mm²)	Indoor unit power supply (Heater)		–
	Indoor unit power supply (Heater) earth		–
	Indoor unit-Outdoor unit		3 × 2.5 (polar)
	Indoor unit-Outdoor unit earth		1 × Min. 2.5
	Remote controller-Indoor unit	*2	2 × 0.69 (Non-polar)
Circuit rating	Indoor unit (Heater) L-N	*3	–
	Indoor unit-Outdoor unit S1-S2	*3	AC220-230-240 V
	Indoor unit-Outdoor unit S2-S3	*3	DC24 V
	Remote controller-Indoor unit	*3	DC14V

*1: A breaker with at least 3mm contact separation in each poles shall be provided. Use non-fuse breaker (NF) or earth leakage breaker (NV).
*2: 10 m wire is attached in the remote controller accessory.
*3: The figures are NOT always against the ground.
S3 terminal has DC24V against S2 terminal. However, between S3 and S1, these terminals are not electrically insulated by the transformer or other device.

Notes:
1. Wiring size must comply with the applicable local and national code.
2. Power supply cords and Indoor/Outdoor unit connecting cords shall not be lighter than polychloroprene sheathed flexible cord. (design 245 IEC 57)
3. Install an earth longer and thicker than other cables.

7.2. Remote controller

7.2.1. For wired remote controller

1) Installing procedures

(1) Select an installing position for the remote controller. (Fig. 7-2)
The temperature sensors are located on both remote controller and indoor unit.

▶ **Procure the following parts locally:**
Two piece switch box
Conduit tube
Look nuts and bushings

▶ **Remote controller guide**
- Ⓐ Remote controller profile
- Ⓑ Required clearances surrounding the remote controller
- Ⓒ Installation pitch

(2) Seal the service entrance for the remote controller cord with putty to prevent possible invasion of dew drops, water, cockroaches or worms. (Fig. 7-3)
- Ⓐ For installation in the switch box:
- Ⓑ For direct installation on the wall select one of the following:

- Prepare a hole through the wall to pass the remote controller cord (in order to run the remote controller cord from the back), then seal the hole with putty.
- Run the remote controller cord through the cut-out at top of case, then seal the cut-out notch with putty similarly as above.

B-1. Route of cord to back of controller:
B-2. Route of cord to top of controller:

(3) For direct installation on the wall
- Ⓒ Wall
- Ⓓ Conduit
- Ⓔ Lock nut
- Ⓕ Bushing
- Ⓖ Switch box
- Ⓗ Remote controller cord
- Ⓘ Seal with putty
- Ⓙ Wood screw

2) Connecting procedures (Fig. 7-4)

① Connect the remote controller cord to the terminal block.
- Ⓐ To TB5 on the indoor unit
- Ⓑ TB6 (No polarity)

② Set the dip switch No.1 shown Ⓒ when using two remote controller's for the same group.
- Ⓒ Dip switches

Setting the dip switches

The dip switches are at the bottom of the remote controller. Remote controller Main/Sub and other function settings are performed using these switches. Ordinarily, only change the Main/Sub setting of SW No.1. (The factory settings are all "ON".)

<SW No. 1>

SW contents Main	Remote controller Main/Sub setting
ON/OFF	Main/Sub
Comment	Set one of the two remote controllers at one group to "Main"

<SW No. 2>

SW contents Main	When remote controller power turned on
ON/OFF	Normally on/Timer mode on
Comment	When you want to return to the timer mode when the power is restored after a power failure when a Program timer is connected, select "Timer mode".

<SW No. 3>

SW contents Main	Cooling/heating display in AUTO mode
ON/OFF	Yes/No
Comment	When you do not want to display "Cooling" and "Heating" in the Auto mode, set to "No".

<SW No. 4>

SW contents Main	Intake temperature display
ON/OFF	Yes/No
Comment	When you do not want to display the intake temperature, set to "No".

7. Electrical work

7.3. Function settings

7.3.1. For wired remote controller (Fig. 7-5)

Ⅰ Mode number
Ⅱ Setting number
Ⅲ Refrigerant address
Ⅳ Unit number

Changing the power voltage setting

• Be sure to change the power voltage setting depending on the voltage used.

① Go to the function setting mode.
Switch OFF the remote controller.
Press the Ⓐ and Ⓑ buttons simultaneously and hold them for at least 2 seconds. FUNCTION will start to flash.
② Use the Ⓒ button to set the refrigerant address (Ⅲ) to 00.
③ Press Ⓓ and [--] will start to flash in the unit number (Ⅳ) display.
④ Use the Ⓒ button to set the unit number (Ⅳ) to 00.
⑤ Press the Ⓔ MODE button to designate the refrigerant address/unit number. [--] will flash in the mode number (Ⅰ) display momentarily.
⑥ Press the Ⓕ buttons to set the mode number (Ⅰ) to 04.
⑦ Press the Ⓖ button and the current set setting number (Ⅱ) will flash.
Use the Ⓕ button to switch the setting number to the power supply voltage to be used.
Power supply voltage
240 V : setting number = 1
220 V, 230 V : setting number = 2
⑧ Press the MODE button Ⓔ and the setting number (Ⅰ) and (Ⅱ) will change to being on constantly and the contents of the setting can be confirmed.
⑨ Press the FILTER Ⓐ and TEST RUN Ⓑ buttons simultaneously for at least two seconds. The function selection screen will disappear momentarily and the air conditioner OFF display will appear.

Function table

Select unit number 00

Mode	Settings	Mode no.	Setting no.	Initial setting	Setting
Power failure automatic recovery	Not available	01	1	○	
	Available		2		
Indoor temperature detecting	Indoor unit operating average	02	1	○	
	Set by indoor unit's remote controller		2		
	Remote controller's internal sensor		3		
LOSSNAY connectivity	Not Supported	03	1		
	Supported (indoor unit is not equipped with outdoor-air intake)		2		
	Supported (indoor unit is equipped with outdoor-air intake)		3		
Power voltage	240 V	04	1		
	220 V, 230 V		2	○	
Auto mode	Energy saving cycle automatically enabled	05	1	○	
	Energy saving cycle automatically disabled		2		

Select unit numbers 01 to 03 or all units (AL [wired remote controller]/07 [wireless remote controller])

Mode	Settings	Mode no.	Setting no.	Initial setting	Setting
Filter sign	100Hr	07	1		
	2500Hr		2		
	No filter sign indicator		3	○	
Fan speed	Standard (PLH/PLA-P·AA(H)/PLA-RP·AA)/Silent (PLH/PLA-P·KA(H), PCH/PCA)	08	1	–	
	High ceiling ① (PLH/PLA-P·AA(H)/PLA-RP·AA)/Standard (PLH/PLA-P·KA(H), PCH/PCA)		2		
	High ceiling ② (PLH/PLA-P·AA(H)/PLA-RP·AA)/High ceiling (PLH/PLA-P·KA(H), PCH/PCA)		3		
No. of air outlets	4 directions	09	1	–	
	3 directions		2		
	2 directions		3		
Installed options (high-performance filter)	Not supported	10	1	–	
	Supported		2		
Up/down vane setting	No vanes	11	1	–	
	Equipped with vanes (vanes angle setup ①)		2		
	Equipped with vanes (vanes angle setup ②)		3		
Energy saving air flow (Heating mode)	Disabled	12	1	–	
	Enabled		2		

8. Duct work

9. Test run

8. Duct work

- Connect canvas duct between unit and duct. (Fig. 8-1)
- Use incombustible material for duct parts.
- Provide full insulation to inlet duct flange and outlet duct to prevent condensation.
- Be sure to change the position of air filter to a position where it can be serviced.

  <A> In case of rear inlet
  <B> In case of bottom inlet
  Ⓐ Duct
  Ⓑ Air inlet
  Ⓒ Access door
  Ⓓ Canvas duct
  Ⓔ Ceiling surface
  Ⓕ Air outlet
  Ⓖ Leave distance enough to prevent short cycle

- Procedure for changing the rear inlet to the bottom inlet. (Fig. 8-2)
  1. Remove air filter.
  2. Remove the bottom plate and flange.
  3. Fit the bottom plate to the rear of the body.
  4. Fit filter to the underside of the body with screws.

  Ⓐ Flange
  Ⓑ Filter
  Ⓒ Bottom plate
  Ⓓ Screws for filter fitting

⚠ **Caution:**
An inlet duct of 850 mm or more should be construted.
To connect the air conditioner main body and the duct for potential equalization.

9.1. Before test run

- ▶ **After completing installation of the wiring and piping of the indoor and outdoor units, check for refrigerant leakage, looseness in the power supply or control wiring, wrong polarity, and no disconnection of one phase in the supply.**
- ▶ **Use a 500-volt megohmmeter to check that the resistance between the power supply terminals and ground is at least 1.0MΩ.**
- ▶ **Do not carry out this test on the control wiring (low voltage circuit) terminals.**

⚠ **Warning:**
Do not use the air conditioner if the insulation resistance is less than 1.0MΩ.

9.2. Test run

The following 2 methods are available.

9.2.1. Using wired remote controller (Fig. 9-1)

① Turn on the power at least 12 hours before the test run.
② Press the [TEST] button twice. ➡ "TEST RUN" liquid crystal display
③ Press the [Mode selection] button. ➡ Make sure that air is blown out.
④ Press the [Mode selection] button and switch to the cooling (or heating) mode.
➡ Make sure that cold (or warm) air is blown out.
⑤ Press the [Fan speed] button. ➡ Make sure that the fan speed is switched.
⑥ Switch the air direction by pressing the [Airflow] or [Louver] button.
➡ Make sure that horizontal outlet, downward outlet, and other air direction adjustments are possible.
➡ Check operation of the outdoor unit fan.
⑦ Release test run by pressing the [ON/OFF] button. ➡ Stop
⑧ After the checks, always turn off the power.

9.2.2. Using SW4 in outdoor unit

Refer to the outdoor unit installation manual.

9.3. Self-check

9.3.1. Wired remote controller (Fig. 9-2)

① Turn on the power.
② Press the [CHECK] button twice.
③ Set refrigerant address with [TEMP] button if system control is used.
④ Press the [ON/OFF] button to stop the self-check.

Ⓐ CHECK button
Ⓑ Refrigerant address
Ⓒ TEMP. button
Ⓓ IC: Indoor unit
OC: Outdoor unit
Ⓔ Check code
Ⓕ Unit address

9. Test run
10. System controll

• For description of each check code, refer to the following table.

① Check code	Symptom	② Buzzer sound	③ OPE LED
P1	Intake sensor error	Single beep × 1	Lit for 1 sec. × 1
P2	Pipe sensor error	Single beep × 2	Lit for 1 sec. × 2
P4	Drain sensor error	Single beep × 4	Lit for 1 sec. × 4
P5	Drain pump error	Single beep × 5	Lit for 1 sec. × 5
P6	Freezing / Overheating safeguard operation	Single beep × 6	Lit for 1 sec. × 6
P8	Pipe temperature error	Single beep × 8	Lit for 1 sec. × 8
P9	TH5 sensor error	Single beep × 2	Lit for 1 sec. × 2
U0–UP	Outdoor unit error	Double beep × 1	Lit for 0.4 sec. + 0.4 sec. × 1
F1–FA	Outdoor unit error	Double beep × 1	Lit for 0.4 sec. + 0.4 sec. × 1
E0–E5	Signal error between remote controller and indoor units	Sounds other than above	Lights other than above
E6–EF	Communication error between indoor and outdoor units	Sounds other than above	Lights other than above
– –	No alarm history	No sound	Not lit
F F F F	No unit	Triple beep	Not lit

• If the unit cannot be operated properly after the above test run has been performed, refer to the following table to remove the cause.

Symptom			Cause
Wired remote controller		LED 1, 2 (PCB in outdoor unit)	
H0	For about 2 minutes following power-on	After LED 1, 2 are lighted, LED 2 is turned off, then only LED 1 is lighted. (Correct operation)	• For about 2 minutes following power-on, operation of the remote controller is not possible due to system start-up. (Correct operation)
H0 → Error code	After about 2 minutes has expired following power-on	Only LED 1 is lighted. → LED 1, 2 blink.	• Connector for the outdoor unit's protection device is not connected. • Reverse or open phase wiring for the outdoor unit's power terminal block (L1, L2, L3)
Display messages do not apper even when operation switch is turned ON (operation lamp does not light up).		Only LED 1 is lighted. → LED 1 blinks twice, LED 2 blinks once.	• Incorrect wiring between indoor and outdoor units (incorrect polarity of S1, S2, S3) • Remote controller wire short

Note:
Operation is not possible for about 30 seconds after cancellation of function selection. (Correct operation)

For description of each LED (LED1, 2, 3) provided on the indoor controller, refer to the following table.

LED1 (power for microcomputer)	Indicates whether control power is supplied. Make sure that this LED is always lit.
LED2 (power for remote controller)	Indicates whether power is supplied to the remote controller. This LED lights only in the case of the indoor unit which is connected to the outdoor unit refrigerant address "0".
LED3 (communication between indoor and outdoor units)	Indicates state of communication between the indoor and outdoor units. Make sure that this LED is always blinking.

10. System controll

Refer to the outdoor unit installation manual.

A.4.12 SAFETY DEVICE SETTINGS

Safety device \ Model	PEAD-RP1.6EA	PEAD-RP2EA	PEAD-RP2.5EA	PEAD-RP3EA
Fan motor inner thermal protector	OFF135±5°C			

Safety device \ Model	PEAD-RP4EA	PEAD-RP5EA	PEAD-RP6EA
Fan motor inner thermal protector	OFF135±5°C		

Safety device \ Model	PEAD-RP2.5GA	PEAD-RP3GA	PEAD-RP4GA
Fan motor inner thermal protector	OFF145±5°C ON 94±15°C		OFF135±5°C ON 86±15°C