Back to Index page

B.3 OUTDOOR UNIT (SUZ)

B.3.1 FEATURES B-94
B.3.2 SPECIFICATIONS B-95
B.3.3 OUTLINES AND DIMENSIONS B-99
B.3.4 WIRING DIAGRAM B-101
B.3.5 REFRIGERANT SYSTEM DIAGRAM B-103
B.3.6 NOISE CRITERIA CURVES B-104
B.3.7 SAFETY DEVICE SETTINGS B-105
B.3.8 SYSTEM CONTROL B-106

B.3.1 FEATURES

SUZ-A09VR
SUZ-A12VR

OUTDOOR UNIT

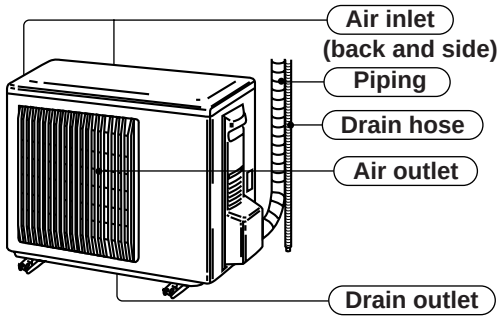

ACCESSORIES

		SUZ-A09VR SUZ-A12VR
①	Drain socket	1

SUZ-A18VR
SUZ-A24VR

OUTDOOR UNIT

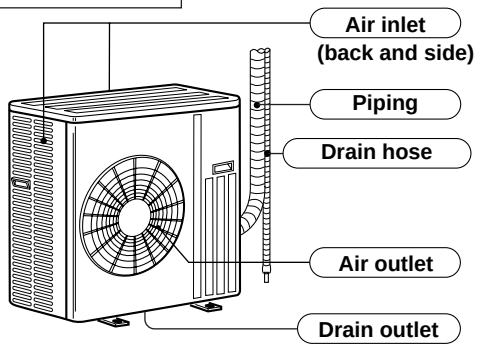

ACCESSORIES

		SUZ-A18VR SUZ-A24VR
①	Drain socket	1
②	Drain cap ϕ33	2

Easy Installation

Mitsubishi Electric's exclusive cleaning-free, Pipe-Reuse technology makes replacement of existing air conditioners with lower-running cost models much easier.

Cleaning-free, pipe-reuse Technology

The new HAB(hard alkyl benzene) refrigerant oil is a unique oil that degrades very slowly. In addition to this new oil, our exclusive cleaning-free technology incorporates a specially developed high-efficiency oil separator and heat exchangers that are optimally designed to prevent oil stagnation. These benefits make it possible to reuse existing piping even when installing a new model.

B.3.2 SPECIFICATION

SLZ series / SUZ series

Outdoor Service Ref.			SUZ-A09VR Indoor Service Ref. SLZ-A09AR		SUZ-A12VR Indoor Service Ref. SLZ-A12AR		SUZ-A18VR Indoor Service Ref. SLZ-A18AR	
Function			Cooling	Heating	Cooling	Heating	Cooling	Heating
Power supply			Single phase 230V,50Hz		Single phase 230V,50Hz		Single phase 230V,50Hz	
Capacity	Capacity Rated frequency(Min.~Max.)	kW	2.5(0.9-3.2)	3.0(0.9-4.3)	3.2(1.0-3.6)	3.8(0.9-4.8)	4.6(1.1-5.2)	5.0(0.9-6.5)
	Dehumidification	ℓ /h	1.4	—	1.8	—	2.3	—
	Air flow(High/Low※)	m³ /h	1900		1900		2,940/1,320※	2,940/2,210※
Electrical data	Starting current ✻1	A	4.20		4.90		7.40	
	Compressor motor current ✻1	A	3.28	3.78	4.43	4.43	6.86	6.46
	Fan motor current	A	0.24		0.24		0.30	
Coefficient of performance (C.O.P)			3.29	3.45	3.02	3.55	2.82	3.23
Compressor	Model		KNB073FBVH		KNB092FAAH		SNB130FLDH	
	Output	W	550		650		850	
	Winding resistance(at 20℃)	Ω	U-V 1.53 U-W 1.53 V-W 1.53		U-V 0.49 U-W 0.49 V-W 0.49		U-V 0.45 U-W 0.45 V-W 0.45	
Fan motor	Model		RA6V21-AA		RA6V21-AA		PM8H60-UB	
	Winding resistance(at 20℃)	Ω	WHT-BLK 347 BLK-RED 281		WHT-BLK 347 BLK-RED 281		BLK-WHT 15.2 WHT-RED 15.2 RED-BLK 15.2	
	Dimensions W×H×D	mm	800×550×285		800×550×285		840×850×330	
	Weight	kg	33		34		53	
Special remarks	Sound level	dB	46		47	48	53/50※	55/53※
	Fan speed	rpm	825		825		800/400※	800/620※
	Fan speed regulator		1		1		2	
	Refrigerant filling capacity(R410A)	kg	0.80		0.90		1.80	
	Refrigerating oil (Model)	cc	320 (NEO22)		320 (NEO22)		450 (NEO22)	
	Thermistor RT61 (at 0℃)	kΩ	32.6		32.6		—	
	Thermistor RT62 (at 100℃)	kΩ	13.4		13.4		—	
	Thermistor RT64 (at 50℃)	kΩ	17		17		—	
	Thermistor RT65 (at 25℃)	kΩ	10		10		—	
	Thermistor RT61 (at 100℃)	kΩ	—		—		13.4	
	Thermistor RT62 (at 25℃)	kΩ	—		—		10.0	
	Thermistor RT65 (at 50℃)	kΩ	—		—		17.0	
	Thermistor RT68 (at 25℃)	kΩ	—		—		10.0	

NOTE : Test conditions are based on ISO 5151
Cooling : Indoor D.B. 27℃ W.B. 19℃
Outdoor D.B. 35℃ W.B. 24℃
Heating : Indoor D.B. 20℃ W.B. 15℃
Outdoor D.B. 7℃ W.B. 6℃
Refrigerant piping length (one way): 5m
✻1 Measured under rated operating frequency.

SEZ-A•CR / SUZ-A•VR

Outdoor Service Ref.			SUZ-A09VR Indoor Service Ref. SEZ-A09CR	
Function			Cooling	Heating
Power supply			Single phase 230V,50Hz	
Capacity	Capacity Rated frequency(Min.~Max.)	kW	2.4 (1.0-3.2)	3.0 (0.9-4.2)
	Dehumidification	ℓ /h	1.4	—
	Air flow	m³ /h	1900	
Electrical data	Starting current ✻1	A	4.30	
	Compressor motor current ✻1	A	3.08	3.78
	Fan motor current	A	0.24	
Coefficient of performance(C.O.P)			3.24	3.41
Compressor	Model		KNB073FBVH	
	Output	W	550	
	Winding resistance(at 20℃)	Ω	U-V 1.53 U-W 1.53 V-W 1.53	
Fan motor	Model		RA6V21-AA	
	Winding resistance(at 20℃)	Ω	WHT-BLK 347 BLK-RED 281	
	Dimensions W×H×D	mm	800×550×285	
	Weight	kg	33	
Special remarks	Sound level	dB	46	
	Fan speed	rpm	825	
	Fan speed regulator		1	
	Refrigerant filling capacity(R410A)	kg	0.80	
	Refrigerating oil (Model)	cc	320 (NEO22)	
	Thermistor RT61(at 0℃)	kΩ	32.6	
	Thermistor RT62(at 100℃)	kΩ	13.4	
	Thermistor RT64(at 50℃)	kΩ	17	
	Thermistor RT65(at 25℃)	kΩ	10	

NOTE : Test conditions are based on ISO 5151
Cooling : Indoor D.B. 27℃ W.B. 19℃
Outdoor D.B. 35℃ W.B. 24℃
Heating : Indoor D.B. 20℃ W.B. 15℃
Outdoor D.B. 7℃ W.B. 6℃
Refrigerant piping length (one way): 5m
✻1 Measured under rated operating frequency.

SEZ-A•AR / SUZ-A•VR

Outdoor Service Ref.			SUZ-A12VR Indoor Service Ref. SEZ-A12AR		SUZ-A18VR Indoor Service Ref. SEZ-A18AR		SUZ-A24VR Indoor Service Ref. SEZ-A24AR	
Function			Cooling	Heating	Cooling	Heating	Cooling	Heating
Power supply			Single phase 230V,50Hz		Single phase 230V,50Hz		Single phase 230V,50Hz	
Capacity	Capacity Rated frequency(Min.~Max.)	kW	3.4 (1.0-3.8)	3.9 (0.9-5.0)	5.0(1.1-5.6)	5.9(1.1-7.2)	5.5(1.1-6.3)	6.9(0.9-8.0)
	Dehumidification	ℓ /h	1.9	—	2.5	—	3.3	—
	Air flow(High/Low※)	m³ /h	1900		2,940/1,640※	2,940/2,210※	2,940/1,640※	2,940/2,210※
Electrical data	Starting current ✻1	A	5.00		8.50		10.40	
	Compressor motor current ✻1	A	4.55	4.45	7.43	7.93	8.36	9.76
	Fan motor current	A	0.24		0.30		0.30	
Coefficient of performance(C.O.P)			3.12	3.55	2.81	3.21	2.81	2.82
Compressor	Model		KNB092FAAH		SNB130FLDH		SNB130FLDH	
	Output	W	650		850		850	
	Winding resistance(at 20℃)	Ω	U-V 0.49 U-W 0.49 V-W 0.49		U-V 0.45 U-W 0.45 V-W 0.45		U-V 0.45 U-W 0.45 V-W 0.45	
Fan motor	Model		RA6V21-AA		PM8H60-UB		PM8H60-UB	
	Winding resistance(at 20℃)	Ω	WHT-BLK 347 BLK-RED 281		BLK-WHT 15.2 WHT-RED 15.2 RED-BLK 15.2		BLK-WHT 15.2 WHT-RED 15.2 RED-BLK 15.2	
	Dimensions W×H×D	mm	800×550×285		840×850×330		840×850×330	
	Weight	kg	34		53		53	
Special remarks	Sound level(High/Low※)	dB	47		53/51※	55/53※	53/51※	55/53※
	Fan speed(High/Low※)	rpm	825		800/480※	800/620※	800/480※	800/620※
	Fan speed regulator		1		2		2	
	Refrigerant filling capacity(R410A)	kg	0.90		1.80		1.80	
	Refrigerating oil (Model)	cc	320 (NEO22)		450 (NEO22)		450 (NEO22)	
	Thermistor RT61 (at 0℃)	kΩ	32.6		—		—	
	Thermistor RT62 (at 100℃)	kΩ	13.4		—		—	
	Thermistor RT64 (at 50℃)	kΩ	17		—		—	
	Thermistor RT65 (at 25℃)	kΩ	10		—		—	
	Thermistor RT61 (at 100℃)	kΩ	—		13.4		13.4	
	Thermistor RT62 (at 25℃)	kΩ	—		10.0		10.0	
	Thermistor RT65 (at 50℃)	kΩ	—		17.0		17.0	
	Thermistor RT68 (at 25℃)	kΩ	—		10.0		10.0	

NOTE : Test conditions are based on ISO 5151
Cooling : Indoor D.B. 27℃ W.B. 19℃
Outdoor D.B. 35℃ W.B. 24℃
Heating : Indoor D.B. 20℃ W.B. 15℃
Outdoor D.B. 7℃ W.B. 6℃
Refrigerant piping length (one way): 5m
✻1 Measured under rated operating frequency.

Specifications and rating conditions of main electric parts

SUZ-A09VR
SUZ-A12VR

Item / Model	SUZ-A09VR	SUZ-A12VR
Current transformer (CT)	ETQ19Z53AY	
Current transformer (CT761, CT781)	ETQ19Z71AY	
Smoothing capacitor(C62A, C62B, C61B)	680μF 420V	
Outdoor fan capacitor (C65)	1.8μF 440V	
Diode module (DB61, DB65)	D25XB60	
Fuse (F61)	250V 20A	
Fuse (F71, F801)	250V 3.15A	
Power transistor module (IPM)	PS21244A	
Expansion valve coil (LEV)	CAD-MD12ME 12VDC	
Reactor (L61)	10A 23.0mH	
Current-detecting resistor (R61)	45mΩ 5W	50mΩ 5W (2 elements)
Current-detecting resistor (R831)	25mΩ 5W	
Current-limiting resistor(R64A, R64B)	5.1Ω 10W	
Solid state relay (SR61)	G3MB	
Terminal block (TB)	3P	
Relay (X63)	G5N-1a/G5NB-1a	
Relay (X64)	G4A-1A-PS	
R.V. coil (21S4)	LD30013	
Outdoor fan motor thermal fuse	Open 152℃	

SUZ-A18VR
SUZ-A24VR

Item / Service Ref.	SUZ-A18VR	SUZ-A24VR
Smoothing capacitor (CB1,2,3)	560μF 450V	
Current transformer (CT1,2)	ETQ19Z68AY	
Current transformer (CT61)	ETQ19Z53AY	
Fuse (F801, F912)	250V 3.15A	
Fuse (F911)	250V 1A	
Fet array (HC932)	SLA5075	
Power transistor module (IPM)	PS21244-A	
Reactor (L)	340μH 20A	
Expansion valve (LEV)	CAM-30YGME 12VDC	
Power factor controller (PFC)	PS51259-A	
Resistor (R64)	10Ω 20W	
Resistor (R934A,B)	1.1Ω 2W 2%	
Resistor (RS1~4)	0.04Ω 7W	
Solenoid coil relay (SSR61)	TLP3506	
Terminal block (TB1)	3P	
Terminal block (TB2)	2P	
Relay (X64)	G4A	
R.V. coil (21S4)	LD30013	

B.3.3 OUTLINES AND DIMENSIONS

SUZ-A09VR SUZ-A12VR

Unit : mm

OUTDOOR UNIT

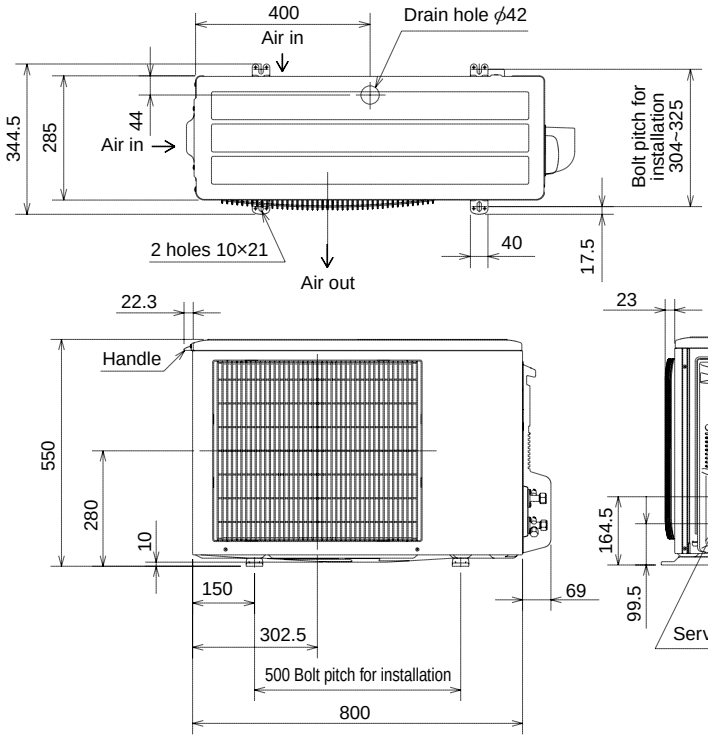

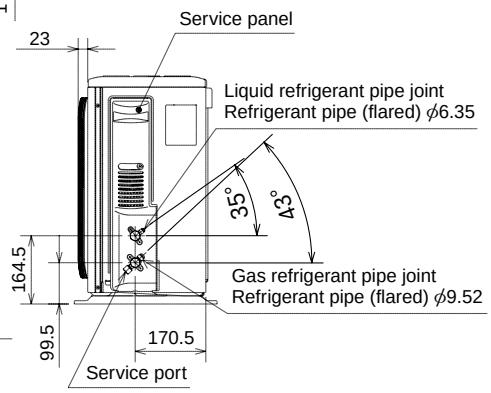

REQUIRED SPACE

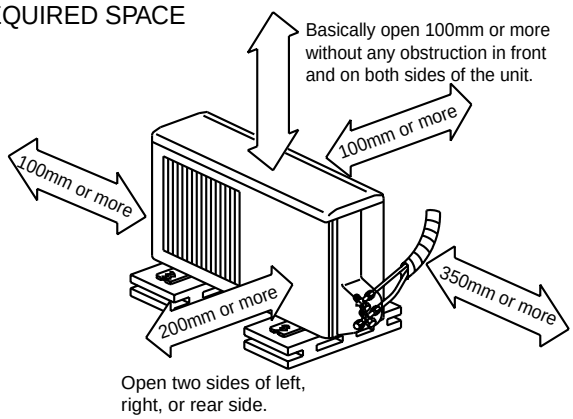

SUZ-A18VR
SUZ-A24VR

Unit: mm

OUTDOOR UNIT

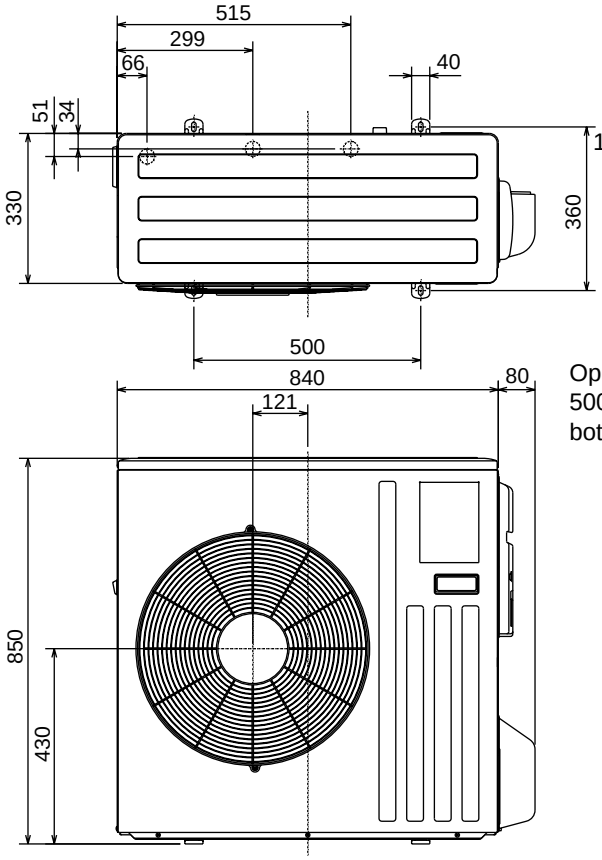

REQUIRED SPACE

Unit : mm

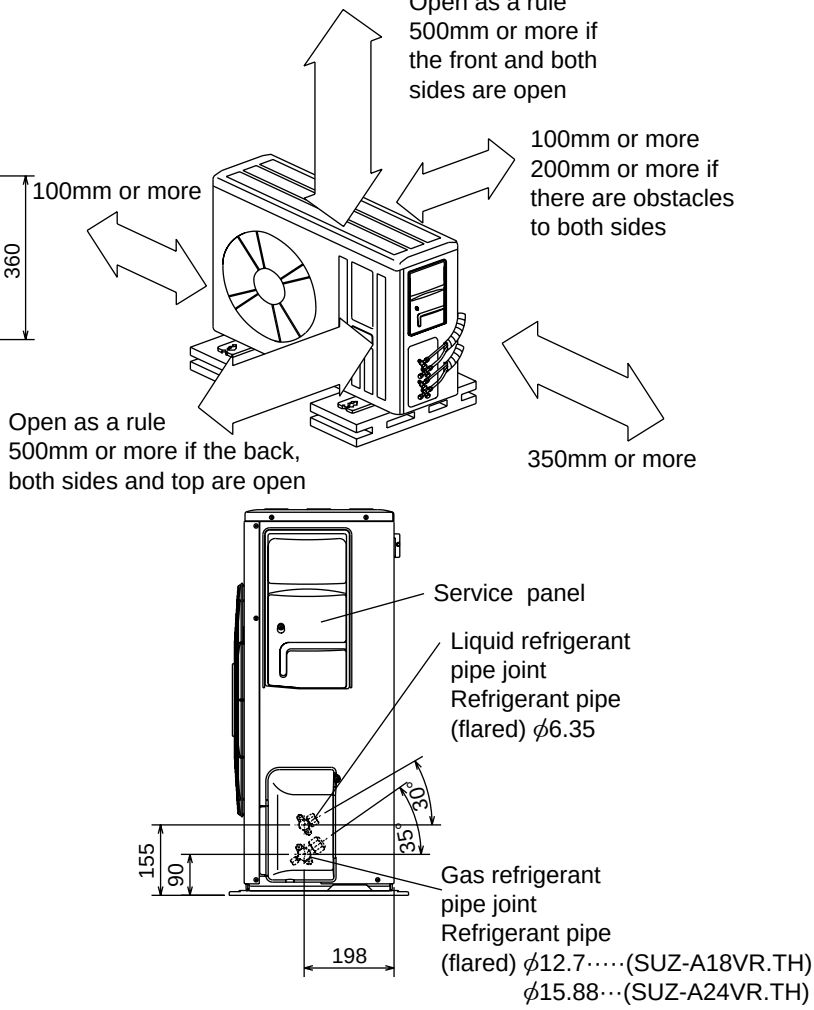

B.3.4 WIRING DIAGRAM

SUZ-A09VR
SUZ-A12VR

OUTDOOR UNIT

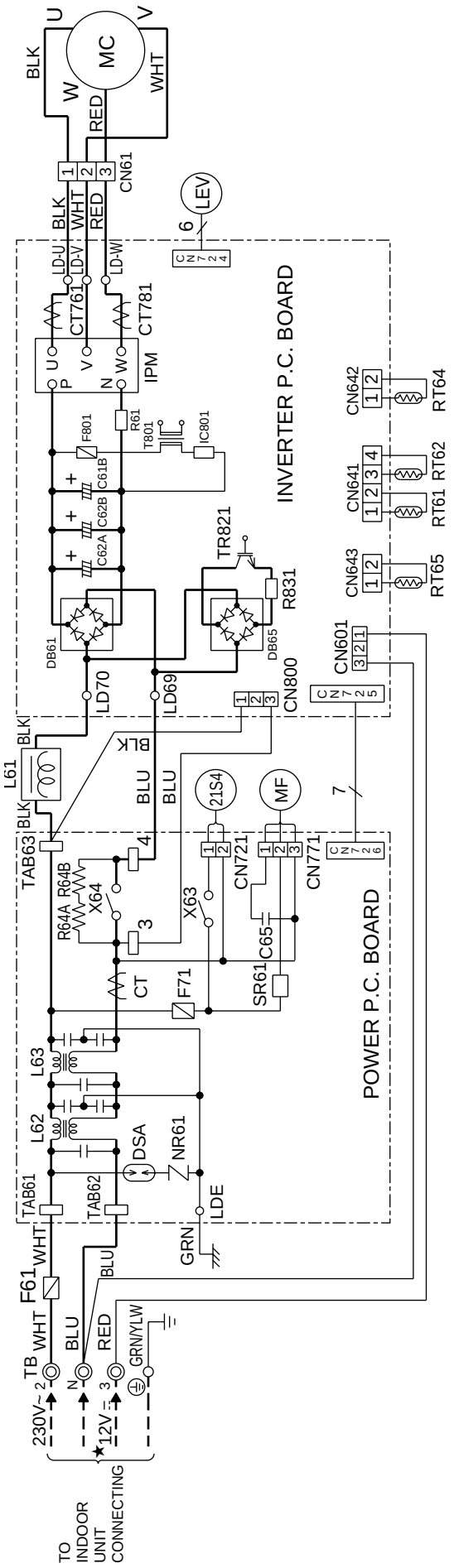

NOTE: 1. About the indoor side electric wiring refer to the indoor unit electric wiring diagram for servicing.
2. Use copper conductors only. (For field wiring)
3. Symbols below indicate. ◎: Terminal block, ▭▭▭: Connect

★ The 12V DC is NOT always against the grou Terminal 3 has 12V DC against terminal N. However, between Terminal 3 and N, these terminals are NOT electrically insulated by the transformer or other device.

SYMBOL	NAME	SYMBOL	NAME	SYMBOL	NAME
CT,CT761,CT781	CURRENT TRANSFORMER	LEV	EXPANSION VALVE COIL	RT65	AMBIENT TEMPERATURE THERMISTOR
C62A,C62B,C61B	SMOOTHING CAPACITOR	L61	REACTOR	R61,R831	CURRENT-DETECTING RESISTOR
C65	FAN MOTOR CAPACITOR	L62,L63	CMC COIL	R64A,R64B	CURRENT-LIMITING RESISTOR
DB61,DB65	DIODE MODULE	MC	COMPRESSOR	SR61	SOLID STATE RELAY
DSA	SURGE ABSORBER	MF	FAN MOTOR	TB	TERMINAL BLOCK
F61	FUSE (20A)	NR61	VARISTOR	TR821	SWITCHING POWER TRANSISTOR
F71,F801	FUSE (3.15A)	RT61	DEFROST THERMISTOR	T801	TRANSFORMER
IC801	INTELLIGENT POWER DEVICE	RT62	DISCHARGE TEMPERATURE THERMISTOR	X63,X64	RELAY
IPM	POWER TRANSISTOR MODULE	RT64	FIN TEMPERATURE THERMISTOR	21S4	REVERSING VALVE COIL

SUZ-A18VR
SUZ-A24VR

OUTDOOR UNIT

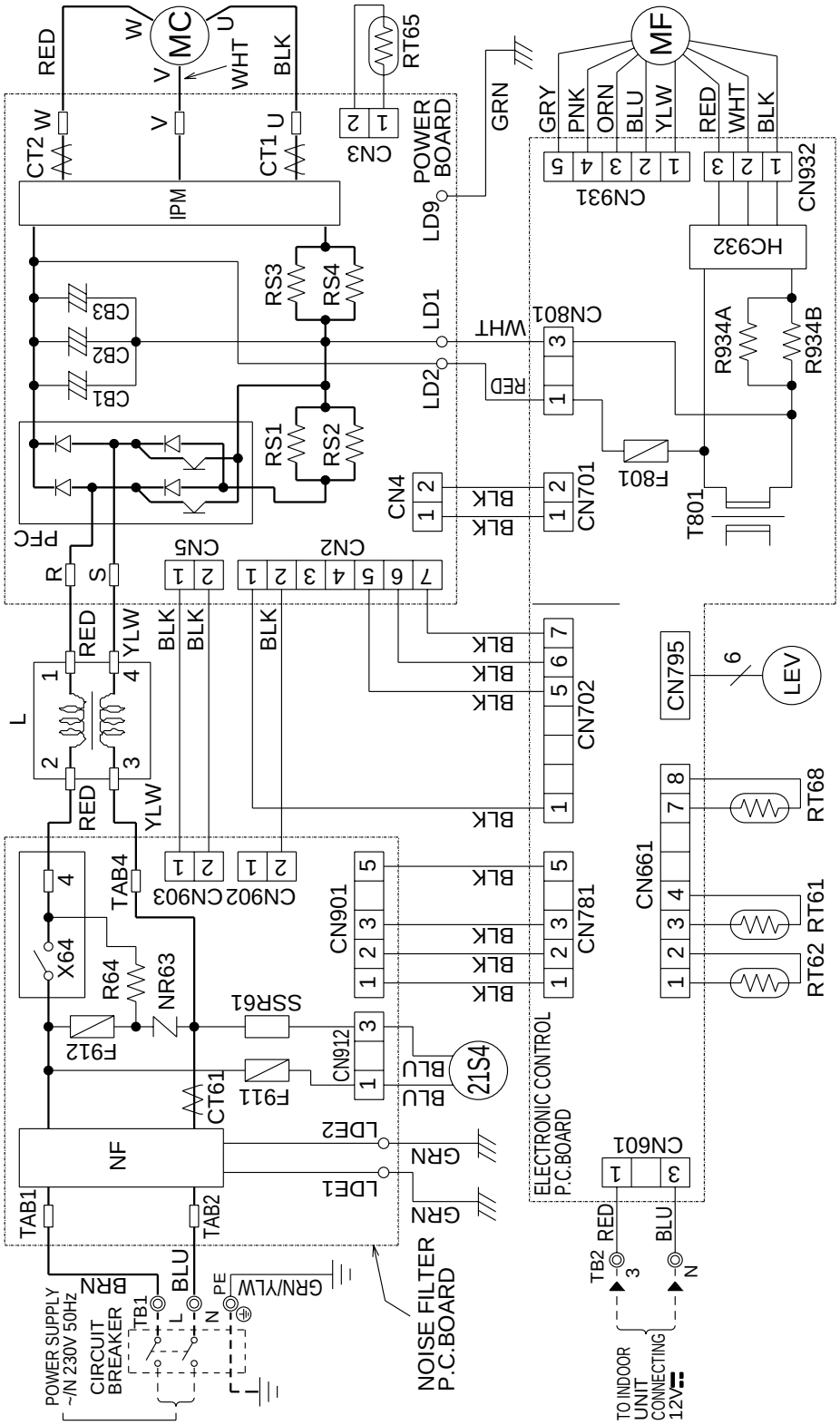

SYMBOL	NAME	SYMBOL	NAME	SYMBOL	NAME
CB1~3	SMOOTHING CAPACITOR	MC	COMPRESSOR	RT65	FIN TEMP.THERMISTOR
CT1,2	CURRENT TRANSFORMER	MF	FAN MOTOR(INNER FUSE)	RT68	OUTDOOR HEAT EXCHANGER TEMPERATURE THERMISTOR
CT61	CURRENT TRANSFORMER	NF	NOISE FILTER		
F801	FUSE(250V 3.15A)	NR63	VARISTOR	SSR61	SOLENOID COIL RELAY
F911	FUSE(250V 1A)	PFC	POWER FACTOR CONTROLLER	T801	TRANSFORMER
F912	FUSE(250V 3.15A)	R64	RESISTOR	TB1	TERMINAL BLOCK
HC932	FET ARRAY	R934A,B	RESISTOR	TB2	TERMINAL BLOCK
IPM	POWER TRANSISTOR MODULE	RS1~4	RESISTOR	X64	RELAY
L	REACTOR	RT61	DISCHARGE TEMP.THERMISTOR	21S4	REVERSING VALVE SOLENOID COIL
LEV	EXPANSION VALVE	RT62	DEFROST TEMP.THERMISTOR		

NOTES 1. About the indoor side electric wiring refer to the indoor unit electric wiring diagram for servicing.
2. Use copper conductors only(for field wiring).
3. Symbols below indicate.
◎:Terminal block □□:Connector

B.3.5 REFRIGERANT SYSTEM DIAGRAM

SUZ-A09VR
SUZ-A12VR

OUTDOOR UNIT

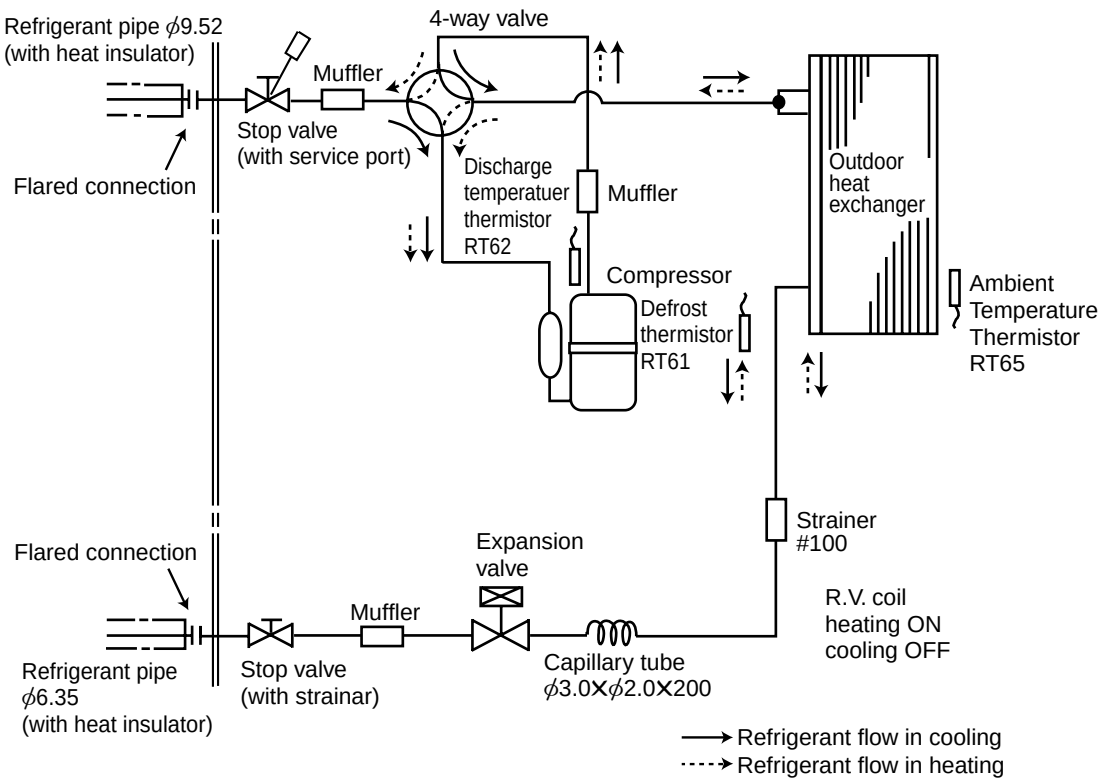

SUZ-A18VR
SUZ-A24VR

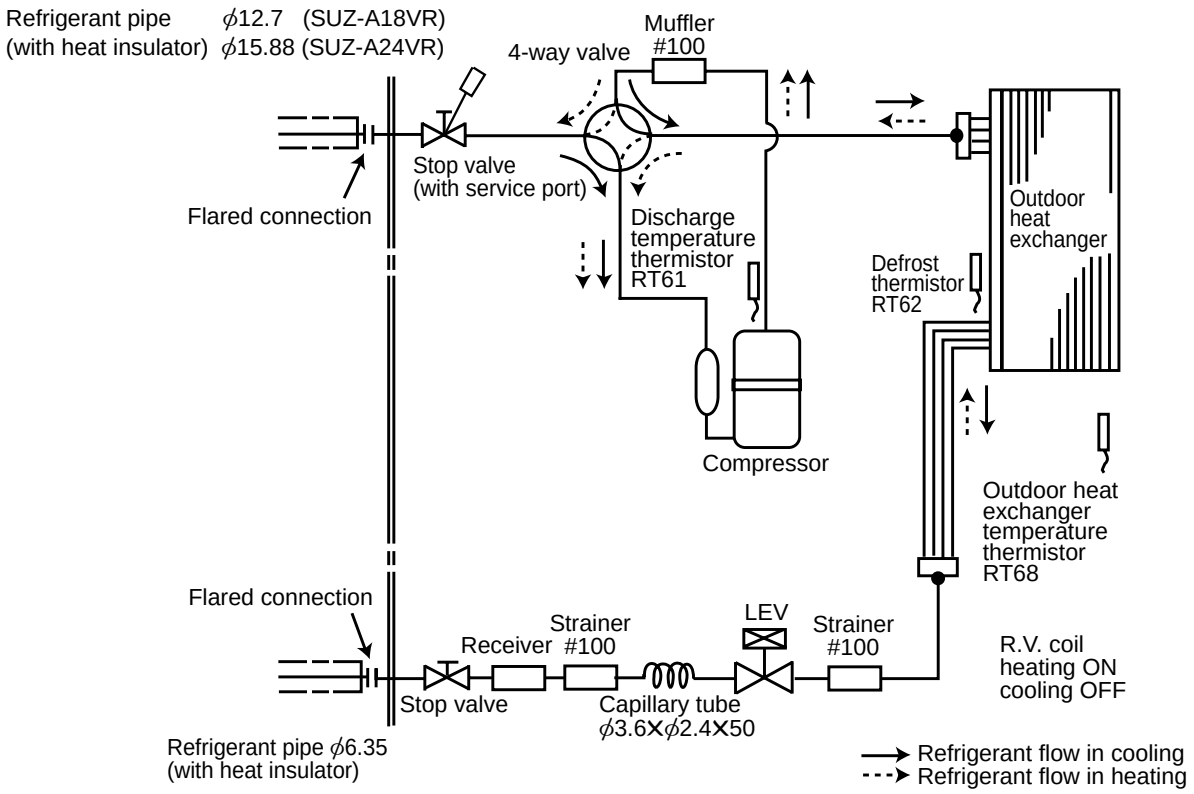

B.3.6 NOISE CRITERIA CURVES

SUZ-09VR

SPEED	FUNCTION	SPL(dB)	LINE
High	COOLING	46	●——●
	HEATING	46	○——○

Test conditions,
Cooling : Dry-bulb temperature 35℃ Wet-bulb temperature (24℃)
Heating : Dry-bulb temperature 7℃ Wet-bulb temperature 6℃

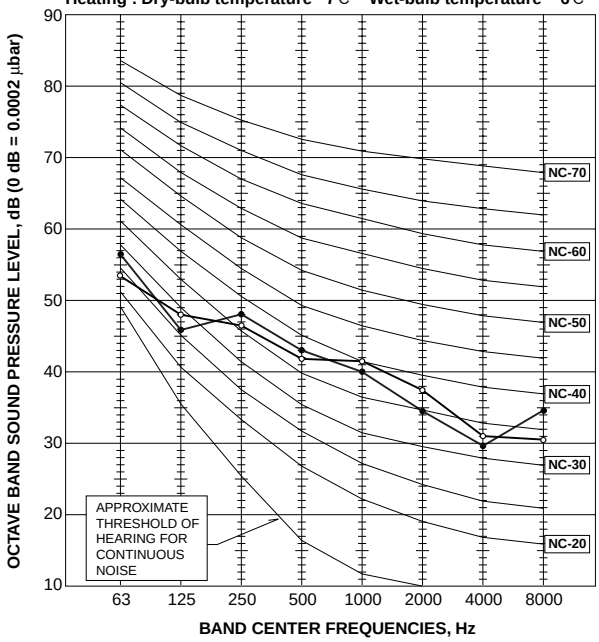

SUZ-A12VR

FAN SPEED	FUNCTION	SPL(dB)	LINE
High	COOLING	47	●——●
	HEATING	48	○——○

Test conditions,
Cooling : Dry-bulb temperature 35℃ Wet-bulb temperature (24℃)
Heating : Dry-bulb temperature 7℃ Wet-bulb temperature 6℃

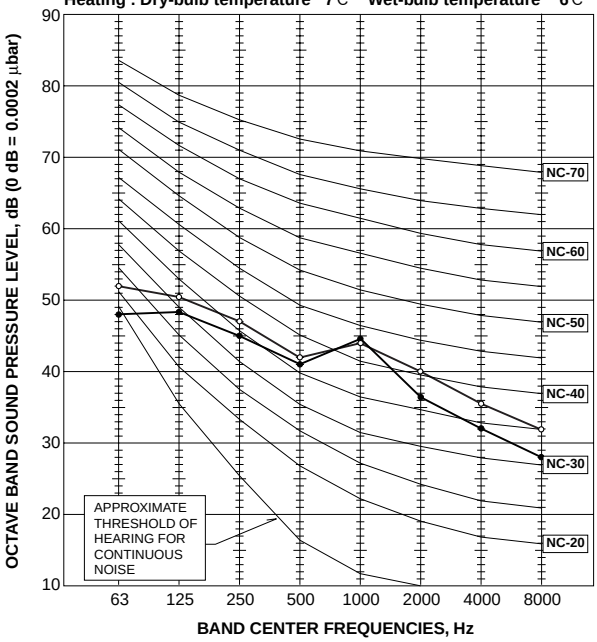

SUZ-18VR
SUZ-24VR

SPEED	FUNCTION	SPL(dB(A))	LINE
High	COOLING	53	●——●
	HEATING	55	○——○

Test conditions,
Cooling : Dry-bulb temperature 35℃ Wet-bulb temperature (24℃)
Heating : Dry-bulb temperature 7℃ Wet-bulb temperature 6℃

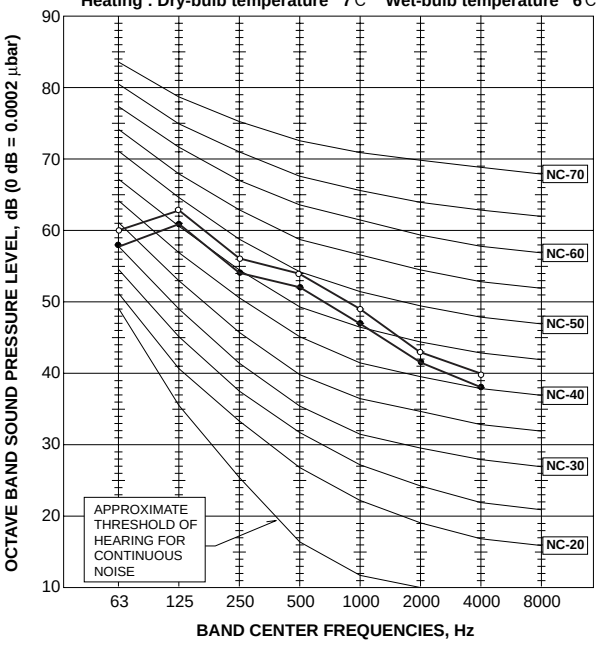

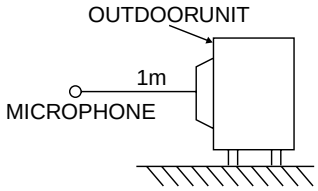

B.3.7 SAFETY DEVICE SETTINGS

Safety device \ Model	SUZ-A09VR	SUZ-A12VR	SUZ-A18VR	SUZ-A24VR
Over current protection (Comp)	14.1A	24.4A	27.8A	27.8A
Fan motor thermal protector	OFF152±5°C		-	-
Fan motor overcurrent protection	-	-	2.78A	2.78A
Discharge temperature overheat protection	ON 116°C or above OFF 100°C or below			

B.3.8 SYSTEM CONTROL

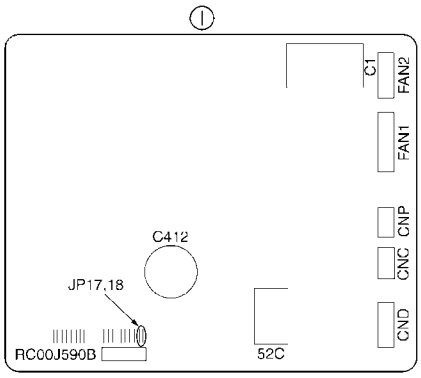

Ⓐ Outdoor unit
Ⓑ Indoor unit (only SEZ)
Ⓒ Master remote controller
Ⓓ Subordinate remote controller
Ⓔ Standard 1:1 (Refrigerant address = 00)
Ⓕ Simultaneous two groups (Refrigerant address = 01)
Ⓖ Simultaneous three groups (Refrigerant address – 02)
Ⓗ Simultaneous four groups (Refrigerant address = 03)
○ Indoor controller board.

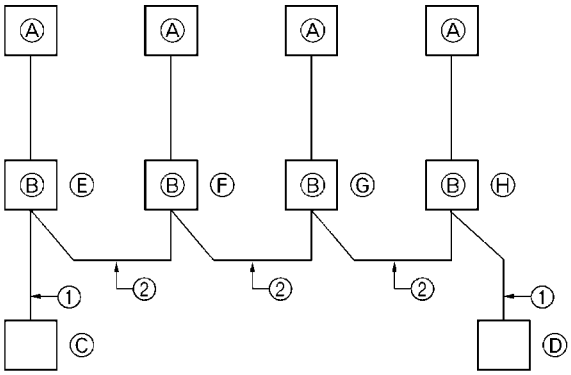

① Wiring from the Remote Control
This wire is connected to terminal block for remote controller of the indoor unit (non-polar).
② When a Different Refrigerant System Grouping is Used.
Up to 4 refrigerant systems can be controlled as one group using the MA remote controller. There is need to set up JP17, JP18 jumper wire of indoor controller board.
Note:
In single refrigerant system, there in no need of wiring ②, and there is need to cut JP17, JP18 jumper wire of indoor controller board.
The total extention of remote control cable is a maximum of 100 m.

		JP17	JP18	
Ⓔ	Refrigerant address = 00	○ ○	○ ○	The setup at the time shipment. In single refrigerant system, there is no need to cut JP17, JP18.
Ⓕ	Refrigerant address = 01	○ ○	○ ○	Cut the JP17 jumper wire of indoor controller board with a pair of nipper.
Ⓖ	Refrigerant address = 02	○ ○	○ ○	Cut the JP18 jumper wire of indoor controller board with a pair of nipper.
Ⓗ	Refrigerant address = 03	○ ○	○ ○	Cut the JP17, JP18 jumper wire of indoor controller board with a pair of nipper.