Back to Index page

# A.6 MULTIPLE SYSTEM

A.6.1 2&3-WAY MULTIPLE SYSTEMS ..... A-220
A.6.2 MULTIPLE SYSTEMS COMBINATION CHART ..... A-221
A.6.3 REFRIGERANT PIPING ..... A-222
A.6.4 ELECTRICAL WORK ..... A-224

# A.6.1 2 & 3-WAY MULTIPLE SYSTEMS

A single outdoor unit has sufficient power to serve up to four indoor units, and one remote controller can be used to manage all units. If two remote controllers are available, they can be used as main and sub control terminals. Multi-Distributor piping for greater system installation flexibility is also available.

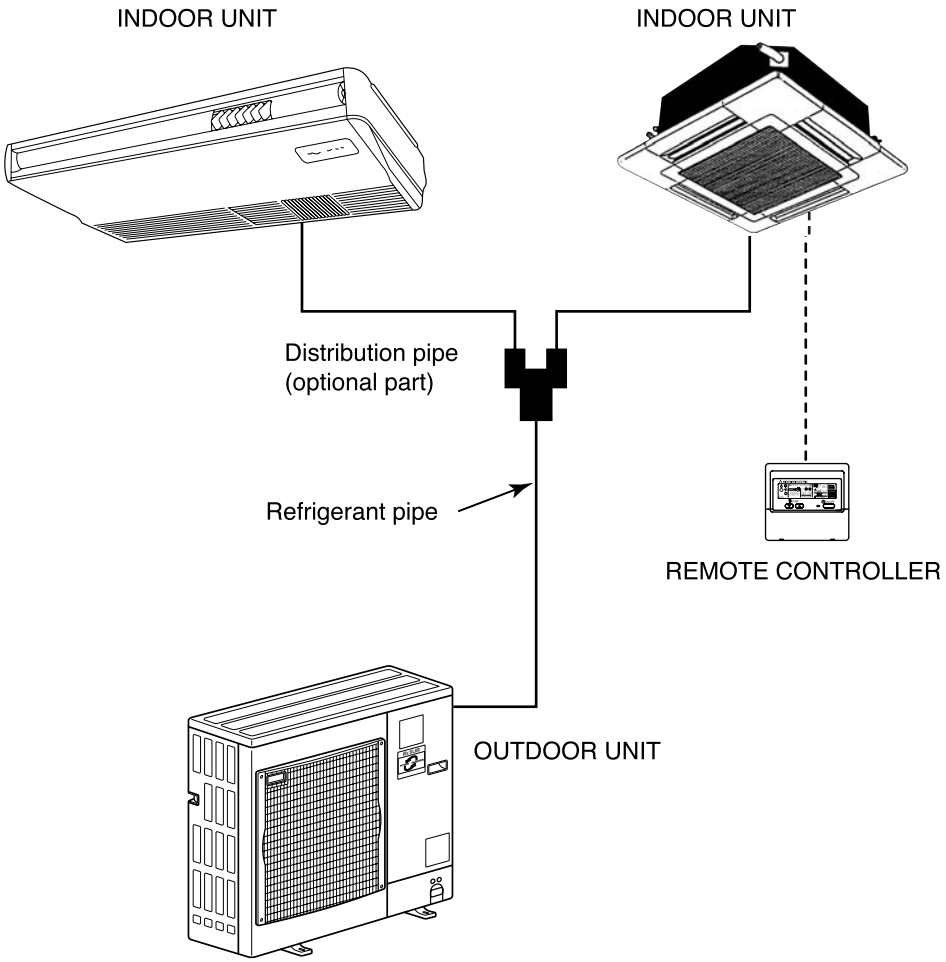

## A.6.2 MULTIPLE SYSTEMS COMBINATION CHART

Split-type heat pump models for R410C

| Applicable Indoor unit | 1.6HP | 2HP | 2.5HP | 3HP |
|---|---|---|---|---|
| | PKA-RP1.6GAL<br>PLA-RP1.6AA<br>PEAD-RP1.6EA | PKA-RP2GAL<br>PCA-RP2GA<br>PLA-RP2AA<br>PEAD-RP2EA | PKA-RP2.5FAL<br>PCA-RP2.5GA<br>PLA-RP2.5AA<br>PEAD-RP2.5EA<br>PEAD-RP2.5GA | PKA-RP3FAL<br>PCA-RP3GA<br>PLA-RP3AA<br>PEAD-RP3EA<br>PEAD-RP3GA |

| Outdoor unit | Twin-Multi | Triple-Multi |
|---|---|---|
| | 50:50 | 33:33:33 |
| PUHZ-RP3VHA | 1.6+1.6 | ——— |
| PUHZ-RP4VHA | 2+2 | ——— |
| PUHZ-RP5VHA | 2.5+2.5 | ——— |
| PUHZ-RP6VHA | 3+3 | 2+2+2 |
| Distributor pipes (option) | MSDD-50SR-E | MSDT-111R-E |

# A.6.3 REFRIGERANT PIPING

## 1. Simultaneous Twin System

Note that the allowed refrigerant piping length, number of bends and difference of elevation of the indoor units differ according to the outdoor unit.

※ Additional charging of refrigerant is carried out using the check valve connected to the piping on the low-pressure side on the inside of the outdoor unit.

1. As to PUHZ-RP3~RP6, if the total pipe length exceeds 30 m of chargeless piping, make an additional charge of the refrigerant in accordance with figures shown in Table 2.
2. The number of bends should not exceed 8 bends between <A + B> and <A + C>.
3. The difference of elevation for the indoor and outdoor units is the same whether the indoor units are up or down in comparison to theoutdoor unit.
4. Leave the stop valve of the outdoor unit closed (closed at time of shipping), and clear the vacuum from the service port of the stop valveon the outdoor unit after connecting all the refrigerant piping.
5. When the above operation is completed, open the stop valve on the outdoor unit completely to link up the refrigerant circuit. An explanation of the stop valve is displayed on the outdoor unit.

**Note:**

- **Be sure to coat the flare sheet surface with freezer oil.**
- **Be sure to connect piping with a double spanner.**
- **Be sure to insulate the indoor piping connections with the accessory insulation material.**
- **Be sure to check for gas leaks after connecting the piping.**
- **Be sure that non-oxidized brazing is carried out when brazing piping.**

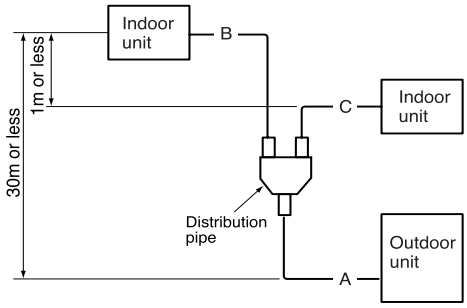


■ PUHZ-RP3~RP6VHA<R410A>

Table 1

| Outdoor unit | Total allowable pipe length A + B | Chargeless pipe length A + B + C | IB - CI | No. of bends |
|---|---|---|---|---|
| PUHZ-RP3 | 50 m or less | 30 m or less | 8 m or less | 15 or less |
| PUHZ-RP4/5/6 | 75 m or less | 30 m or less | 8 m or less | 15 or less |

Table 2

| Outdoor unit | A + B + C | | | | |
|---|---|---|---|---|---|
| | Allowable pipe length | Refrigerant additional charge volume (kg) | | | |
| | | 31 to 40 m or less | 41 to 50 m or less | 51 to 60m or less | 61 to 75m or less |
| PUHZ-RP3 | 50 m or less | 0.6kg | 1.2kg | | |
| PUHZ-RP4/5/6 | 75 m or less | 0.6kg | 1.2kg | 1.8kg | 2.4kg |

Table 3

| | Capacity type | Liquid pipe | Gas pipe |
|---|---|---|---|
| Indoor unit | RP1.6/2 | ϕ6.35 | ϕ12.7 |
| | P2.5/ 3 | ϕ9.52 | ϕ15.88 |
| Outdoor unit | PUHZ-RP3/4/5/6 | ϕ9.52 | ϕ15.88 |

## 2. Simultaneous Triple System

※ The refrigerant additional charge is carried out using the check valve connected to the piping on the low-pressure side on the inside of theoutdoor unit.

1. As to PUHZ-RP6, if the total pipe length exceeds the 30 m of chargeless piping, make an additional charge of the refrigerant in accordance with the figures shown in Table 5.
2. The number of bends should not exceed 8 bends between <A + B>, <A + C> and <A + D>.
3. The difference of elevation for the indoor and outdoor units is the same whether the indoor units are up or down in comparison to the outdoor unit.

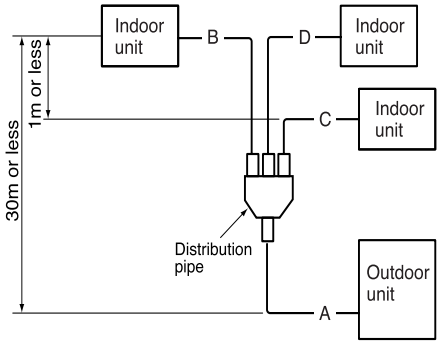


■PUHZ-RP6VHA<R410A>

Table 4

| Outdoor unit | Total allowable pipe length A + B+C+D | Chargeless pipe length A + B + C+D | IB - CI or IB - DI or IC-DI | No. of bends |
|---|---|---|---|---|
| PUHZ-RP6 | 50 m or less | 30 m or less | 8 m or less | 15 or less |

Table 5

| Outdoor unit | A + B + C+D | | | | |
|---|---|---|---|---|---|
| | Allowable pipe length | Refrigerant additional charge volume (kg) | | | |
| | | 31 to 40 m or less | 41 to 50 m or less | 51 to 60m or less | 61 to 75m or less |
| PUHZ-RP6 | 75 m or less | 0.6kg | 1.2kg | 1.8kg | 2.4kg |

Table 6

| | Capacity type | Liquid pipe | Gas pipe |
|---|---|---|---|
| Indoor unit | RP2 | $\phi$6.35 | $\phi$12.7 |
| Outdoor unit | PUHZ-RP6 | $\phi$9.52 | $\phi$15.88 |

# A.6.4 ELECTRICAL WORK

## [Example]

### 1. Simultaneous Twin System

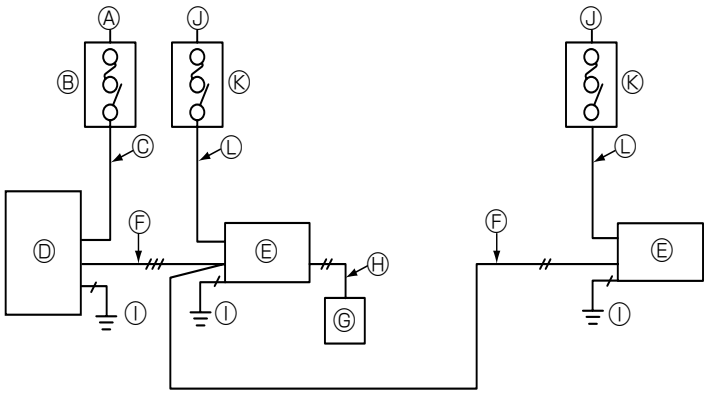


Ⓐ Power supply for outdoor unit
Ⓑ Main switch/fuse (purchased locally) for outdoor unit
Ⓒ Power supply wiring for outdoor unit
Ⓓ Outdoor unit
Ⓔ Indoor unit
Ⓕ Connection wiring for indoor/outdoor units (polarity)
Ⓖ Remote controller
Ⓗ Connection wiring for indoor/remote controller (no polarity)
Ⓘ Grounding

Ⓙ,Ⓚ,Ⓛ: with electric heater model only
Ⓙ Power supply for electric heater
Ⓚ Main switch/fuse for electric heater
Ⓛ Power supply wiring for electric heater

**⚠Caution:**
**Both the indoor unit and the outdoor unit must be grounded.**

### 2. Simultaneous Triple System

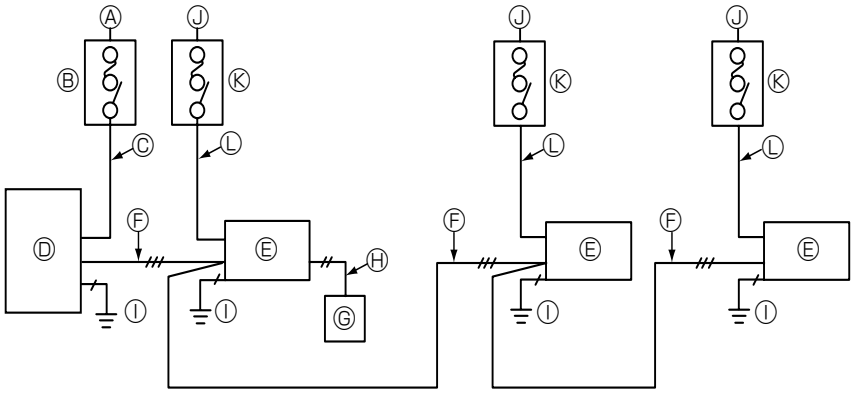


**Check items**

1. Grounding protection with a no-fuse breaker (earth leakage breaker [ELB]) is usually installed for Ⓑ and Ⓚ.
2. The power cable thickness of Ⓒ and Ⓑ have been selected for a voltage drop up to 20 m. If the cable length exceeds 20 m, select a cablethickness appropriate to that estimated voltage drop.
3. The connection wiring ㎠ between the outdoor and indoor units can be extended up to a maximum of 50 m, and the total extension, including the crossover wiring between rooms is a maximum of 80 m.
   Use flat cable (three-core wire) for indoor and outdoor connection wiring, and connect the core wires in their line-up order to S1, S2, and S3 of the outdoor unit' s terminal board. (The core wire connected to terminal S2 should be in the center.)
4. Be careful about choosing the installation location for the earth leakage breaker and about how it is installed, as the initial electric current may cause it to malfunction.