Back to Index page

A.1 CEILING CASSETTE (PLA)

A.1.1 FEATURES A-4
A.1.2 SPECIFICATIONS A-5
A.1.3 OUTLINES AND DIMENSIONS A-9
A.1.4 WIRING DIAGRAM A-10
A.1.5 REFRIGERANT SYSTEM DIAGRAM A-11
A.1.6 PERFORMANCE DATA A-12
A.1.7 FRESH AIR IN TAKE AMOUNT A-27
A.1.8 BRANCH DUCT(Installation at site) A-29
A.1.9 NOISE CRITERIA CURVES A-35
A.1.10 TEMPERATURE AND AIR FLOW DISTRIBUTIONS A-37
A.1.11 OUTLET AIR SPEED AND COVERAGE RANGE A-40
A.1.12 REMOTE CONTROLLER A-41
A.1.12.1 Wired Remote Controller A-41
A.1.12.2 Wireless Remote Controller A-43
A.1.13 TROUBLESHOOTING A-44
A.1.14 INSTALLATION PROCEDURE A-45
A.1.15 SAFETY DEVICE SETTINGS A-57

A.1.1 FEATURES

● Indoor Unit

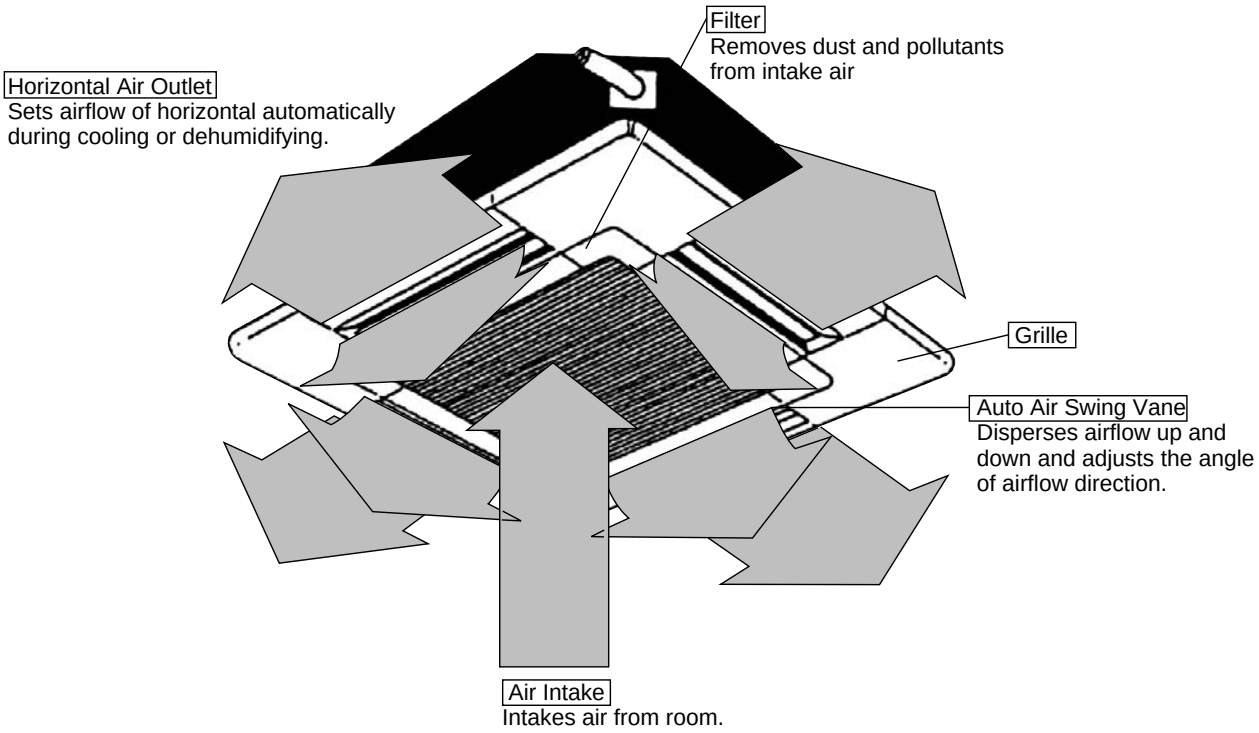

Smooth running, attractive, and feature-rich units offer the versatility and power necessary for a variety of applications.

1.72 Airflow Patterns

Rooms differ in many ways, from size, layout, purpose of use to the objects they contain.
or this reason, PL ceiling cassettes can be adjusted to produce 72 variations of airflow to perfectly match the requirements of a wide range of applications.
Selecting two-, or four-way airflow, and then adjusting each vane either manually or by remote control produse the 72 patterns. This makes possible highly customized, flexible patterns of flow.

2.High Ceiling Compatible

PL ceiling cassettes are equipped eith wide-flow air outlets that make precision air conditioning of spaces with high ceilings of to 4.2 meters possible. The height and width rations of the air outlets have been optimised to provide a smoother flow of air that encounters less resistance.

3.Attractive, Slim Units

With heights of only 258mm for the less that 3HP unit and 298mm for the 4/5/6HP units, the smooth, aesthetic installation of the PL series is as attractive as it is inconspicuous.

PLA-RP1.6/2/2.5AA:258mm PLA-RP4/5/6AA:298mm

A.1.2 SPECIFICATIONS

Item / Service Ref.				PLA-RP1.6AA	
Function				Cooling	Heating
Capacity			Btu/h	12,300	14,000
			W	3,600(1,600~4,500)	4,100(1,600~5,200)
Total input			kW	1.07	1.12
Indoor unit	**Service Ref.**			**PLA-RP1.6AA**	
	Power supply (phase, cycle,voltage)			Single phase, 50Hz, 220-230-240V	
		Input	kW	0.16	0.16
		Running current	A	0.79	0.79
		Starting current	A	1.0	1.0
	External finish (Panel)			Munsell 0.70Y 8.59/0.97	
	Heat exchanger			Plate fin coil	
	Fan	Fan (drive) × No.		Turbo fan (direct) ×1	
		Fan motor output	kW	0.070	
		Airflow (Lo-Mi2-Mi1-Hi)	m³ / min (CFM)	11-12-13-14(390-425-460-495)	
		External static pressure	Pa (mmAq)	0 (direct blow)	
	Booster heater		kW	—	
	Operation control & Thermostat			Remote controller & built-in	
	Sound level (Lo-Mi2-Mi1-Hi)		dB	27-28-29-31	
	Unit drain pipe I.D.		mm (in.)	32 (1-1/4)	
	Dimensions	W	mm (in.)	UNIT : 840 (33-1/16)	PANEL: 950 (37-3/8)
		D	mm (in.)	UNIT : 840 (33-1/16)	PANEL : 950 (37-3/8)
		H	mm (in.)	UNIT : 258 (10-3/16)	PANEL : 30 (1-3/16)
	Weight		kg (lbs.)	UNIT : 24 (53)	PANEL: 5 (11)
Outdoor unir Service Ref.				**PUHZ-RP1.6VHA**	

Item / Service Ref.				PLA-RP2AA	
Function				Cooling	Heating
Capacity			Btu/h	17,100	20,500
			W	5,000(2,300~5,600)	6,000(2,500~7,300)
Total input			kW	1.55	1.62
Indoor unit	**Service Ref.**			**PLA-RP2AA**	
	Power supply (phase, cycle,voltage)			Single phase, 50Hz, 220-230-240V	
		Input	kW	0.16	0.16
		Running current	A	0.79	0.79
		Starting current	A	1.0	1.0
	External finish (Panel)			Munsell 0.70Y 8.59/0.97	
	Heat exchanger			Plate fin coil	
	Fan	Fan (drive) × No.		Turbo fan (direct) ×1	
		Fan motor output	kW	0.070	
		Airflow (Lo-Mi2-Mi1-Hi)	m³ / min (CFM)	14-15-16-18(495-530-565-635)	
		External static pressure	Pa (mmAq)	0 (direct blow)	
	Booster heater		kW	—	
	Operation control & Thermostat			Remote controller & built-in	
	Sound level (Lo-Mi2-Mi1-Hi)		dB	28-29-31-33	
	Unit drain pipe I.D.		mm (in.)	32 (1-1/4)	
	Dimensions	W	mm (in.)	UNIT : 840 (33-1/16)	PANEL : 950 (37-3/8)
		D	mm (in.)	UNIT : 840 (33-1/16)	PANEL : 950 (37-3/8)
		H	mm (in.)	UNIT : 258 (10-3/16)	PANEL : 30 (1-3/16)
	Weight		kg (lbs.)	UNIT : 24(53)	PANEL : 5 (11)
Outdoor unir Service Ref.				**PUHZ-RP2VHA**	

NOTE:

1. Rating conditions (ISO T1)
   Cooling Indoor : D.B. 27˚C (80˚F) W.B. 19˚C (66˚F) Outdoor : D.B. 35˚C (95˚F) W.B. 24˚C (75˚F)
   Heating Indoor : D.B. 20˚C (68˚F) Outdoor : D.B. 7˚C (45˚F) W.B. 6˚C (43˚F)
   Refrigerant piping length (one way) : 5m (16ft.)
2. Guaranteed operating range

		Indoor	Outdoor
Cooling	Upper limit	D.B. 35˚C, W.B. 22.5˚C	D.B. 46˚C
	Lower limit	D.B. 19˚C, W.B. 15˚C	D.B. -5˚C
Heating	Upper limit	D.B. 28˚C	D.B. 21˚C, W.B. 15˚C
	Lower limit	D.B. 17˚C	D.B. -11˚C, W.B. -12˚C

3. Guaranteed voltage
   198~264V, 50Hz
4. Above data based on indicated voltage
   Indoor unit Single phase 230V 50Hz
   Outdoor unit Single phase 230V 50Hz
5. Refer to the data book of outdoor unit for tha outdoor unit's specifications.

Item / Service Ref.				PLA-RP2.5AA	
Function				Cooling	Heating
Capacity			Btu/h	20,500	23,900
			W	6,000 (2,700~6,700)	7,000 (2,800~8,200)
Total input			kW	1.65	1.85
Indoor unit	**Service Ref.**			**PLA-RP2.5AA**	
	Power supply (phase, cycle,voltage)			Single phase, 50Hz, 220-230-240V	
		Input	kW	0.16	0.16
		Running current	A	0.79	0.79
		Starting current	A	1.0	1.0
	External finish (Panel)			Munsell 0.70Y 8.59/0.97	
	Heat exchanger			Plate fin coil	
	Fan	Fan (drive) × No.		Turbo fan (direct) ×1	
		Fan motor output	kW	0.070	
		Airflow (Lo-Mi2-Mi1-Hi)	m³ / min (CFM)	14-15-16-18(495-530-565-635)	
		External static pressure	Pa (mmAq)	0 (direct blow)	
	Booster heater		kW	—	
	Operation control & Thermostat			Remote controller & built-in	
	Sound level (Lo-Mi2-Mi1-Hi)		dB	28-29-31-33	
	Unit drain pipe I.D.		mm (in.)	32 (1-1/4)	
	Dimensions	W	mm (in.)	UNIT : 840 (33-1/16)	PANEL: 950 (37-3/8)
		D	mm (in.)	UNIT : 840 (33-1/16)	PANEL : 950 (37-3/8)
		H	mm (in.)	UNIT : 258 (10-3/16)	PANEL : 30 (1-3/16)
	Weight		kg (lbs.)	UNIT : 24 (53)	PANEL: 5 (11)
Outdoor unir Service Ref.				**PUHZ-RP2.5VHA**	

Item / Service Ref.				PLA-RP3AA	
Function				Cooling	Heating
Capacity			Btu/h	24,200	27,300
			W	7,100 (3,300~8,100)	8,000 (3,500~10,200)
Total input			kW	1.97	2.34
Indoor unit	**Service Ref.**			**PLA-RP3AA.UK** **PLA-RP3AA1.UK**	
	Power supply (phase, cycle,voltage)			Single phase, 50Hz, 220-230-240V	
		Input	kW	0.16	0.16
		Running current	A	0.79	0.79
		Starting current	A	1.0	1.0
	External finish (Panel)			Munsell 0.70Y 8.59/0.97	
	Heat exchanger			Plate fin coil	
	Fan	Fan (drive) × No.		Turbo fan (direct) ×1	
		Fan motor output	kW	0.070	
		Airflow (Lo-Mi2-Mi1-Hi)	m³ / min (CFM)	15-16-18-20 (530-565-635-705)	
		External static pressure	Pa (mmAq)	0 (direct blow)	
	Booster heater		kW	—	
	Operation control & Thermostat			Remote controller & built-in	
	Sound level (Lo-Mi2-Mi1-Hi)		dB	28-30-32-34	
	Unit drain pipe I.D.		mm (in.)	32 (1-1/4)	
	Dimensions	W	mm (in.)	UNIT : 840 (33-1/16)	PANEL: 950 (37-3/8)
		D	mm (in.)	UNIT : 840 (33-1/16)	PANEL : 950 (37-3/8)
		H	mm (in.)	UNIT : 258 (10-3/16)	PANEL : 30 (1-3/16)
	Weight		kg (lbs.)	UNIT : 24 (53)	PANEL: 5 (11)
Outdoor unir Service Ref.				**PUHZ-RP3VHA**	

NOTE:

1. Rating conditions (ISO T1)
   Cooling Indoor : D.B. 27℃ (80˚F) W.B. 19℃ (66˚F) Outdoor : D.B. 35℃ (95˚F) W.B. 24℃ (75˚F)
   Heating Indoor : D.B. 20℃ (68˚F) Outdoor : D.B. 7℃ (45˚F) W.B. 6℃ (43˚F)
   Refrigerant piping length (one way) : 5m (16ft.)
2. Guaranteed operating range

		Indoor	Outdoor
Cooling	Upper limit	D.B. 35˚C, W.B. 22.5˚C	D.B. 46˚C
	Lower limit	D.B. 19˚C, W.B. 15˚C	D.B. -5˚C
Heating	Upper limit	D.B. 28˚C	D.B. 21˚C, W.B. 15˚C
	Lower limit	D.B. 17˚C	D.B. -11˚C, W.B. -12˚C

3. Guaranteed voltage
   198~264V, 50Hz
4. Above data based on indicated voltage
   Indoor unit Single phase 230V 50Hz
   Outdoor unit Single phase 230V 50Hz
5. Refer to the data book of outdoor unit for tha outdoor unit's specifications.

Item / Service Ref.				PLA-RP4AA	
Function				Cooling	Heating
Capacity			Btu/h	34,100	38,200
		PUHZ-RP4VHA	W	10,000 (4,900~11,400)	11,200 (4,500~14,000)
Total input			kW	3.03	3.39
Indoor unit	Service Ref.			PLA-RP4AA	
	Power supply (phase, cycle,voltage)			Single phase, 50Hz, 220-230-240V	
		Input	kW	0.25	0.25
		Running current	A	1.25	1.25
		Starting current	A	2.0	2.0
	External finish (Panel)			Munsell 0.70Y 8.59/0.97	
	Heat exchanger			Plate fin coil	
	Fan	Fan (drive) × No.		Turbo fan (direct) ×1	
		Fan motor output	kW	0.120	
		Airflow (Lo-Mi2-Mi1-Hi)	m³ / min (CFM)	20-23-26-28 (705-810-920-990)	
		External static pressure	Pa (mmAq)	0 (direct blow)	
	Booster heater		kW	—	
	Operation control & Thermostat			Remote controller & built-in	
	Sound level (Lo-Mi2-Mi1-Hi)		dB	33-36-39-41	
	Unit drain pipe I.D.		mm (in.)	32 (1-1/4)	
	Dimensions	W	mm (in.)	UNIT : 840 (33-1/16) PANEL : 950 (37-3/8)	
		D	mm (in.)	UNIT : 840 (33-1/16) PANEL : 950 (37-3/8)	
		H	mm (in.)	UNIT : 298 (11-3/4) PANEL : 30 (1-3/16)	
	Weight		kg (lbs.)	UNIT : 30 (66) PANEL : 5 (11)	
Outdoor unir Service Ref.				**PUHZ-RP4VHA**	

Item / Service Ref.				PLA-RP5AA.UK	
Function				Cooling	Heating
Capacity			Btu/h	42,700	47,800
		PUHZ-RP5VHA	W	12,500 (5,500~14,000)	14,000 (5,000~16,000)
Total input			kW	3.89	4.27
Indoor unit	Service Ref.			PLA-RP5AA	
	Power supply (phase, cycle,voltage)			Single phase, 50Hz, 220-230-240V	
		Input	kW	0.33	0.33
		Running current	A	1.64	1.64
		Starting current	A	2.0	2.0
	External finish (Panel)			Munsell 0.70Y 8.59/0.97	
	Heat exchanger			Plate fin coil	
	Fan	Fan (drive) × No.		Turbo fan (direct) ×1	
		Fan motor output	kW	0.120	
		Airflow (Lo-Mi2-Mi1-Hi)	m³ / min (CFM)	22-25-28-30 (775-880-990-1,060)	
		External static pressure	Pa (mmAq)	0 (direct blow)	
	Booster heater		kW	—	
	Operation control & Thermostat			Remote controller & built-in	
	Sound level (Lo-Mi2-Mi1-Hi)		dB	37-40-43-45	
	Unit drain pipe I.D.		mm (in.)	32 (1-1/4)	
	Dimensions	W	mm (in.)	UNIT : 840 (33-1/16) PANEL : 950 (37-3/8)	
		D	mm (in.)	UNIT : 840 (33-1/16) PANEL : 950 (37-3/8)	
		H	mm (in.)	UNIT : 298 (11-3/4) PANEL : 30 (1-3/16)	
	Weight		kg (lbs.)	UNIT : 32 (71) PANEL : 5 (11)	
Outdoor unir Service Ref.				**PUHZ-RP5VHA**	

NOTE:

1. Rating conditions (ISO T1)
   Cooling Indoor : D.B. 27℃ (80˚F) W.B. 19℃ (66˚F) Outdoor : D.B. 35℃ (95˚F) W.B. 24℃ (75˚F)
   Heating Indoor : D.B. 20℃ (68˚F) Outdoor : D.B. 7℃ (45˚F) W.B. 6℃ (43˚F)
   Refrigerant piping length (one way) : 5m (16ft.)
2. Guaranteed operating range

		Indoor	Outdoor
Cooling	Upper limit	D.B. 35˚C, W.B. 22.5˚C	D.B. 46˚C
	Lower limit	D.B. 19˚C, W.B. 15˚C	D.B. -5˚C
Heating	Upper limit	D.B. 28˚C	D.B. 21˚C, W.B. 15˚C
	Lower limit	D.B. 17˚C	D.B. -11˚C, W.B. -12˚C

3. Guaranteed voltage
   198~264V, 50Hz
4. Above data based on indicated voltage
   Indoor unit Single phase 230V 50Hz
   Outdoor unit Single phase 230V 50Hz
5. Refer to the data book of outdoor unit for tha outdoor unit's specifications.

Item / Service Ref.				PLA-RP6AA	
Function				Cooling	Heating
Capacity			Btu/h	47,800	54,600
		PUHZ-RP6VHA	W	14,000 (6,200~15,300)	16,000 (5,000~18,000)
Total input			kW	4.99	4.91
Indoor unit	**Service Ref.**			**PLA-RP6AA**	
	Power supply (phase, cycle,voltage)			Single phase, 50Hz, 220-230-240V	
		Input	kW	0.33	0.33
		Running current	A	1.64	1.64
		Starting current	A	2.0	2.0
	External finish (Panel)			Munsell 0.70Y 8.59/0.97	
	Heat exchanger			Plate fin coil	
	Fan	Fan (drive) × No.		Turbo fan (direct) ×1	
		Fan motor output	kW	0.120	
		Airflow (Lo-Mi2-Mi1-Hi)	m³ / min (CFM)	22-25-28-30 (775-880-990-1,060)	
		External static pressure	Pa (mmAq)	0 (direct blow)	
	Booster heater		kW	—	
	Operation control & Thermostat			Remote controller & built-in	
	Sound level (Lo-Mi2-Mi1-Hi)		dB	37-40-43-45	
	Unit drain pipe I.D.		mm (in.)	32 (1-1/4)	
	Dimensions	W	mm (in.)	UNIT : 840 (33-1/16) PANEL : 950 (37-3/8)	
		D	mm (in.)	UNIT : 840 (33-1/16) PANEL : 950 (37-3/8)	
		H	mm (in.)	UNIT : 298 (11-3/4) PANEL : 30 (1-3/16)	
	Weight		kg (lbs.)	UNIT : 32 (71) PANEL : 5 (11)	
Outdoor unir Service Ref.				**PUHZ-RP6VHA**	

NOTE:

1. Rating conditions (ISO T1)
   Cooling : Indoor: D.B. 27℃ (80°F) W.B. 19℃ (66°F) Outdoor: D.B. 35℃ (95°F) W.B. 24℃ (75°F)
   Heating : Indoor: D.B. 20℃ (68°F) Outdoor: D.B. 7℃ (45°F) W.B. 6℃ (43°F)
   Refrigerant piping length (one way) : 5m (16ft.)
2. Guaranteed operating range

		Indoor	Outdoor
Cooling	Upper limit	D.B. 35℃, W.B. 22.5℃	D.B. 46℃
	Lower limit	D.B. 19 ℃, W.B. 15℃	D.B. -5℃
Heating	Upper limit	D.B. 28℃	D.B. 21℃, W.B. 15℃
	Lower limit	D.B. 17℃	D.B. -11℃, W.B. -12℃

3. Guaranteed voltage
   198~264V, 50Hz
4. Above data based on indicated voltage
   Indoor unit Single phase 230V 50Hz
   Outdoor unit Single phase 230V 50Hz
5. Refer to the data book of outdoor unit for tha outdoor unit's specifications.

A.1.3 OUTLINES AND DIMENSIONS

Unit : mm

PLA-RP1.6AA PLA-RP2AA PLA-RP2.5AA PLA-RP3AA PLA-RP4AA PLA-RP5AA PLA-RP6AA

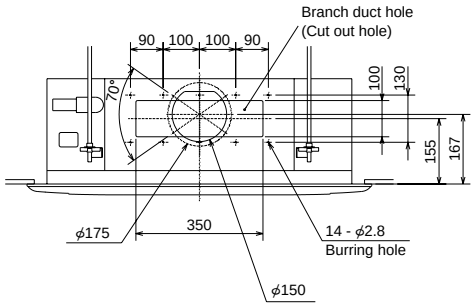

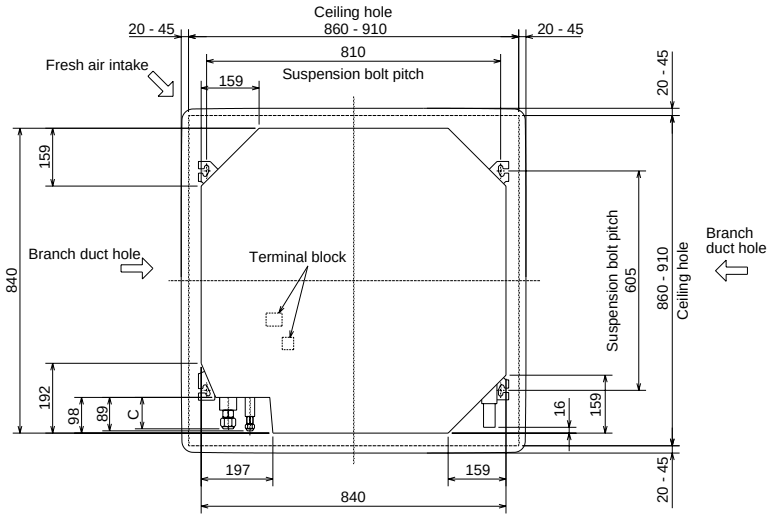

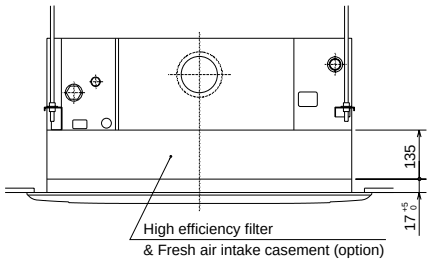

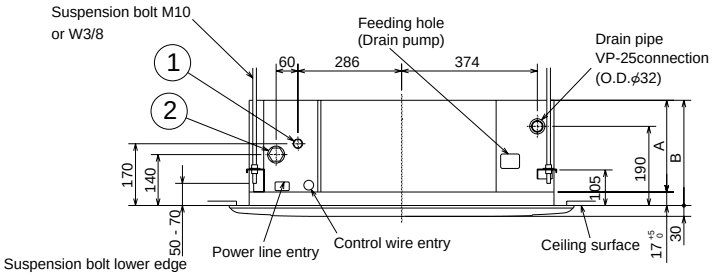

A (WIRELESS PANEL)

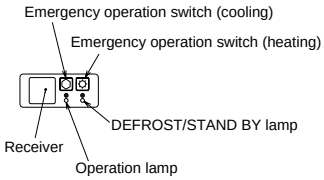

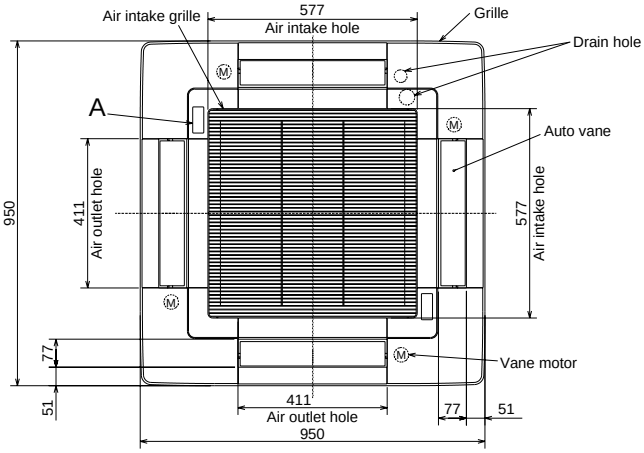

Models	①	②	A	B	C
PLA-RP1.6,2AA	FOR PUHZ-RP type Refrigerant pipe(6.35mm dia.) flared connection 1/4F	FOR PUHZ-RP type Refrigerant pipe(12.7mm dia.) flared connection 1/2F	241	258	80
	FOR PU(H)-P type Refrigerant pipe(9.52mm dia.) flared connection 3/8F	FOR PU(H)-P type Refrigerant pipe(15.88mm dia.) flared connection 5/8F			
PLA-RP2.5,3AA	Refrigerant pipe(9.52mm dia.) flared connection 3/8F	Refrigerant pipe(15.88mm dia.) flared connection 5/8F			
PLA-RP4,5,6AA	Refrigerant pipe(9.52mm dia.) flared connection 3/8F	FOR PUHZ-RP type Refrigerant pipe(15.88mm dia.) flared connection 5/8F	281	298	84
		FOR PU(H)-P type Refrigerant pipe(19.05mm dia.) flared connection 3/4F			

A.1.4 WIRING DIAGRAM

PLA-RP1.6AA PLA-RP2AA PLA-RP2.5AA PLA-RP3AA PLA-RP4AA PLA-RP5AA PLA-RP6AA

[LEGEND]

SYMBOL		NAME	SYMBOL		NAME	SYMBOL		NAME
P.B		INDOOR POWER BOARD	MV		VANE MOTOR	W.B		WIRELESS REMOTE CONTROLLER BOARD
	F1	FUSE (4A)	DP		DRAIN-UP MACHINE		RU	RECEIVING UNIT
	ZNR	VARISTOR	DS		DRAIN SENSOR		BZ	BUZZER
I.B		INDOOR CONTROLLER BOARD	H2		DEW PREVENTION HEATER		LED1	LED (RUN INDICATOR)
	CN2L	CONNECTOR (LOSSNAY)	TB4		TERMINAL BLOCK (INDOOR/OUTDOOR CONNECTING LINE)		LED2	LED (HOT ADJUST)
	CN32	CONNECTOR (REMOTE SWITCH)	TB5		TERMINAL BLOCK (REMOTE CONTROLLER TRANSMISSION LINE)		SW1	SWITCH (HEATING ON/OFF)
	CN41	CONNECTOR (HA TERMINAL-A)					SW2	SWITCH (COOLING ON/OFF)
	SW1	JUMPER WIRE (MODEL SELECTION)	TH1		ROOM TEMPERATURE THERMISTOR (0℃/15kΩ, 25℃/5.4kΩ DETECT)			
	SW2	JUMPER WIRE (CAPACITY CORD)						
	SWE	SWITCH (EMERGENCY OPERATION)	TH2		PIPE TEMPERATURE THERMISTOR/LIQUID (0℃/15kΩ, 25℃/5.4kΩ DETECT)			
	X1	RELAY (DRAIN PUMP)						
	X4	RELAY (FAN MOTOR)	TH5		COND./EVA. TEMPERATURE THERMISTOR (0℃/15kΩ, 25℃/5.4kΩ DETECT)			
	FC	FAN PHASE CONTROL						
	LED1	POWER SUPPLY (I.B)	R.B		REMOTE CONTROLLER BOARD			
	LED2	POWER SUPPLY (I.B)		CN2	CONNECTOR (PROGRAM TIMER)			
	LED3	TRANSMISSION (INDOOR-OUTDOOR)		TB6	TERMINAL BLOCK (REMOTE CONTROLLER TRANSMISSION LINE)			
C		CAPACITOR (FAN MOTOR)						
MF		FAN MOTOR						

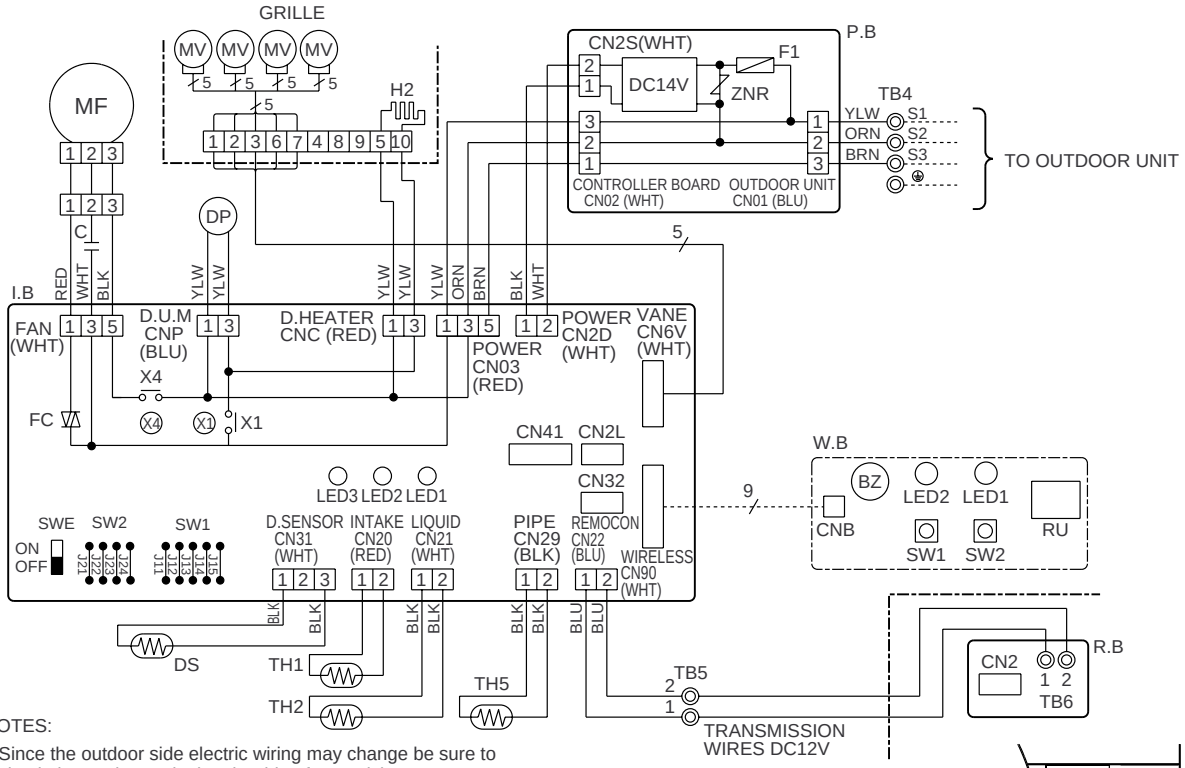

NOTES:

1. Since the outdoor side electric wiring may change be sure to check the outdoor unit electric wiring for servicing.
2. Indoor and outdoor connecting wires are made with polarities, make wiring matching terminal numbers (S1,S2,S3).
3. Symbols used in wiring diagram above are, ▭▭▭ :Connector, ◎:Terminal (block).

Please set the voltage using the remote controller. For the setting method, please refer to the indoor unit Installation Manual.

[Servicing]

Fasten terminal of the terminal board "TB4" equips lock system.
To remove the fastened terminal, pull it while pressing the protruding portion (locking lever) of the terminal. The fastened terminal protruding portion should face upward.

SW1		
MODELS	Manufacture	Service board
PLA-RP1.6,2,2.5AA.UK PLA-RP3,4,5,6AA.UK PLA-RP3,4,5,6AA1.UK	J11J12J13J14J15	1 2 3 4 5 ON OFF

SW2					
MODELS	Manufacture	Service board	MODELS	Manufacture	Service board
PLA-RP1.6AA.UK	J21J22J23J24	1 2 3 4 ON OFF	PLA-RP4AA.UK PLA-RP4AA1.UK	J21J22J23J24	1 2 3 4 ON OFF
PLA-RP2AA.UK	J21J22J23J24	1 2 3 4 ON OFF	PLA-RP5AA.UK	J21J22J23J24	1 2 3 4 ON OFF
PLA-RP2.5AA.UK	J21J22J23J24	1 2 3 4 ON OFF	PLA-RP5AA1.UK PLA-RP6AA.UK PLA-RP6AA1.UK	J21J22J23J24	1 2 3 4 ON OFF
PLA-RP3AA.UK PLA-RP3AA1.UK	J21J22J23J24	1 2 3 4 ON OFF			

A.1.5 REFRIGERANT SYSTEM DIAGRAM

PLA-RP1.6AA PLA-RP2AA PLA-RP2.5AA PLA-RP3AA PLA-RP4AA PLA-RP5AA PLA-RP6AA

Unit : mm(inch)

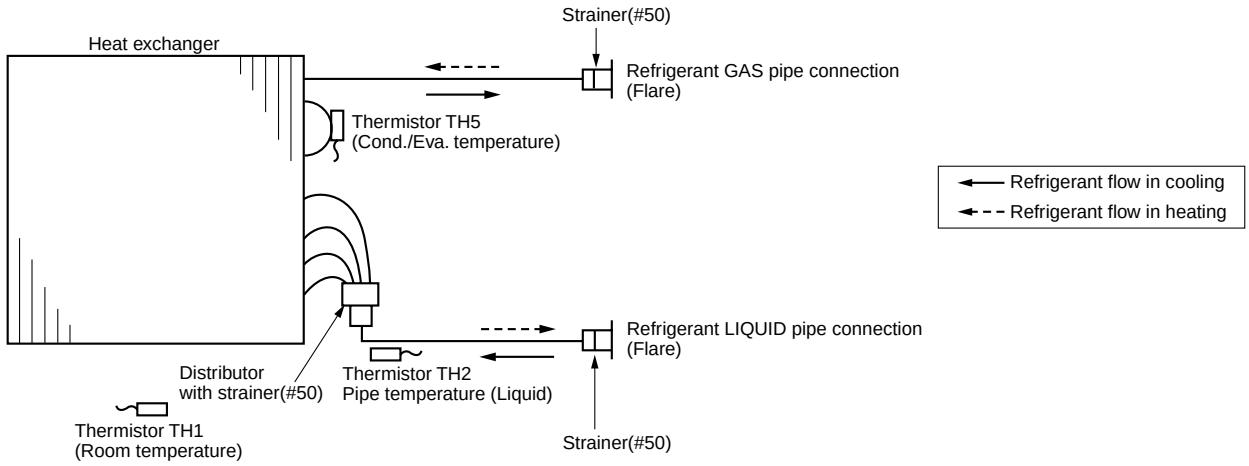

A.1.6 PERFORMANCE DATA

COOLING CAPACITY
PLA-RP1.6AA / PUHZ-RP1.6VHA

(230V)

Indoor intake air D.B.(˚C)	Indoor intake air W.B.(˚C)	Outdoor intale air D.B.(˚C)											
		20				25				30			
		CA	SHC	SHF	P.C.	CA	SHC	SHF	P.C.	CA	SHC	SHF	P.C.
20	16	3564	2816	0.79	0.86	3456	2730	0.79	0.90	3348	2645	0.79	0.96
20	18	3816	2557	0.67	0.87	3708	2484	0.67	0.92	3582	2400	0.67	0.98
20	20	4104	2257	0.55	0.90	4014	2208	0.55	0.94	3906	2148	0.55	1.01
22	16	3564	3101	0.87	0.86	3456	3007	0.87	0.90	3348	2913	0.87	0.96
22	18	3816	2862	0.75	0.87	3708	2781	0.75	0.92	3582	2687	0.75	0.98
22	20	4104	2586	0.63	0.90	4014	2529	0.63	0.94	3906	2461	0.63	1.01
24	16	3564	3386	0.95	0.86	3456	3283	0.95	0.90	3348	3181	0.95	0.96
24	18	3816	3167	0.83	0.87	3708	3078	0.83	0.92	3582	2973	0.83	0.98
24	20	4104	2914	0.71	0.90	4014	2850	0.71	0.94	3906	2773	0.71	1.01
24	22	4374	2581	0.59	0.92	4284	2528	0.59	0.97	4176	2464	0.59	1.04
26	16	3564	3564	1.00	0.86	3456	3456	1.00	0.90	3348	3348	1.00	0.96
26	18	3816	3473	0.91	0.87	3708	3374	0.91	0.92	3582	3260	0.91	0.98
26	20	4104	3242	0.79	0.90	4014	3171	0.79	0.94	3906	3086	0.79	1.01
26	22	4374	2931	0.67	0.92	4284	2870	0.67	0.97	4176	2798	0.67	1.04
27	16	3564	3564	1.00	0.86	3456	3456	1.00	0.90	3348	3348	1.00	0.96
27	18	3816	3625	0.95	0.87	3708	3523	0.95	0.92	3582	3403	0.95	0.98
27	20	4104	3406	0.83	0.90	4014	3332	0.83	0.94	3906	3242	0.83	1.01
27	22	4374	3106	0.71	0.92	4284	3042	0.71	0.97	4176	2965	0.71	1.04
28	16	3564	3564	1.00	0.86	3456	3456	1.00	0.90	3348	3348	1.00	0.96
28	18	3816	3778	0.99	0.87	3708	3671	0.99	0.92	3582	3546	0.99	0.98
28	20	4104	3570	0.87	0.90	4014	3492	0.87	0.94	3906	3398	0.87	1.01
28	22	4374	3281	0.75	0.92	4284	3213	0.75	0.97	4176	3132	0.75	1.04
30	16	3564	3564	1.00	0.86	3456	3456	1.00	0.90	3348	3348	1.00	0.96
30	18	3816	3816	1.00	0.87	3708	3708	1.00	0.92	3582	3582	1.00	0.98
30	20	4104	3899	0.95	0.90	4014	3813	0.95	0.94	3906	3711	0.95	1.01
30	22	4374	3630	0.83	0.92	4284	3556	0.83	0.97	4176	3466	0.83	1.04
32	16	3564	3564	1.00	0.86	3456	3456	1.00	0.90	3348	3348	1.00	0.96
32	18	3816	3816	1.00	0.87	3708	3708	1.00	0.92	3582	3582	1.00	0.98
32	20	4104	4104	1.00	0.90	4014	4014	1.00	0.94	3906	3906	1.00	1.01
32	22	4374	3980	0.91	0.92	4284	3898	0.91	0.97	4176	3800	0.91	1.04
34	16	3564	3564	1.00	0.86	3456	3456	1.00	0.90	3348	3348	1.00	0.96
34	18	3816	3816	1.00	0.87	3708	3708	1.00	0.92	3582	3582	1.00	0.98
34	20	4104	4104	1.00	0.90	4014	4014	1.00	0.94	3906	3906	1.00	1.01
34	22	4374	4330	0.99	0.92	4284	4241	0.99	0.97	4176	4134	0.99	1.04

NOTE: CA : Capacity (W) SHC: Sensible heat capacity (W)
P.C.: Power consumption (kW) SHF: Sensible heat factor

COOLING CAPACITY
PLA-RP1.6AA / PUHZ-RP1.6VHA

(230V)

Indoor intake air D.B.(˚C)	Indoor intake air W.B.(˚C)	Outdoor intale air D.B.(˚C)											
		35				40				45			
		CA	SHC	SHF	P.C.	CA	SHC	SHF	P.C.	CA	SHC	SHF	P.C.
20	16	3204	2531	0.79	1.03	3060	2417	0.79	1.10	2916	2304	0.79	1.19
20	18	3456	2316	0.67	1.05	3348	2243	0.67	1.13	3132	2098	0.67	1.22
20	20	3744	2059	0.55	1.08	3600	1980	0.55	1.16	3384	1861	0.55	1.24
22	16	3204	2787	0.87	1.03	3060	2662	0.87	1.10	2916	2537	0.87	1.19
22	18	3456	2592	0.75	1.05	3348	2511	0.75	1.13	3132	2349	0.75	1.22
22	20	3744	2359	0.63	1.08	3600	2268	0.63	1.16	3384	2132	0.63	1.24
24	16	3204	3044	0.95	1.03	3060	2907	0.95	1.10	2916	2770	0.95	1.19
24	18	3456	2868	0.83	1.05	3348	2779	0.83	1.13	3132	2600	0.83	1.22
24	20	3744	2658	0.71	1.08	3600	2556	0.71	1.16	3384	2403	0.71	1.24
24	22	4032	2379	0.59	1.10	3888	2294	0.59	1.19	3672	2166	0.59	1.26
26	16	3204	3204	1.00	1.03	3060	3060	1.00	1.10	2916	2916	1.00	1.19
26	18	3456	3145	0.91	1.05	3348	3047	0.91	1.13	3132	2850	0.91	1.22
26	20	3744	2958	0.79	1.08	3600	2844	0.79	1.16	3384	2673	0.79	1.24
26	22	4032	2701	0.67	1.10	3888	2605	0.67	1.19	3672	2460	0.67	1.26
27	16	3204	3204	1.00	1.03	3060	3060	1.00	1.10	2916	2916	1.00	1.19
27	18	3456	3283	0.95	1.05	3348	3181	0.95	1.13	3132	2975	0.95	1.22
27	20	3744	3108	0.83	1.08	3600	2988	0.83	1.16	3384	2809	0.83	1.24
27	22	4032	2863	0.71	1.10	3888	2760	0.71	1.19	3672	2607	0.71	1.26
28	16	3204	3204	1.00	1.03	3060	3060	1.00	1.10	2916	2916	1.00	1.19
28	18	3456	3421	0.99	1.05	3348	3315	0.99	1.13	3132	3101	0.99	1.22
28	20	3744	3257	0.87	1.08	3600	3132	0.87	1.16	3384	2944	0.87	1.24
28	22	4032	3024	0.75	1.10	3888	2916	0.75	1.19	3672	2754	0.75	1.26
30	16	3204	3204	1.00	1.03	3060	3060	1.00	1.10	2916	2916	1.00	1.19
30	18	3456	3456	1.00	1.05	3348	3348	1.00	1.13	3132	3132	1.00	1.22
30	20	3744	3557	0.95	1.08	3600	3420	0.95	1.16	3384	3215	0.95	1.24
30	22	4032	3347	0.83	1.10	3888	3227	0.83	1.19	3672	3048	0.83	1.26
32	16	3204	3204	1.00	1.03	3060	3060	1.00	1.10	2916	2916	1.00	1.19
32	18	3456	3456	1.00	1.05	3348	3348	1.00	1.13	3132	3132	1.00	1.22
32	20	3744	3744	1.00	1.08	3600	3600	1.00	1.16	3384	3384	1.00	1.24
32	22	4032	3669	0.91	1.10	3888	3538	0.91	1.19	3672	3342	0.91	1.26
34	16	3204	3204	1.00	1.03	3060	3060	1.00	1.10	2916	2916	1.00	1.19
34	18	3456	3456	1.00	1.05	3348	3348	1.00	1.13	3132	3132	1.00	1.22
34	20	3744	3744	1.00	1.08	3600	3600	1.00	1.16	3384	3384	1.00	1.24
34	22	4032	3992	0.99	1.10	3888	3849	0.99	1.19	3672	3635	0.99	1.26

NOTE: CA : Capacity (W) SHC: Sensible heat capacity (W)
P.C.: Power consumption (kW) SHF: Sensible heat factor

COOLING CAPACITY
PLA-RP2AA / PUHZ-RP2VHA

(230V)

Indoor intake air D.B.(˚C)	Indoor intake air W.B.(˚C)	Outdoor intale air D.B.(˚C)											
		20				25				30			
		CA	SHC	SHF	P.C.	CA	SHC	SHF	P.C.	CA	SHC	SHF	P.C.
20	16	4950	3762	0.76	1.24	4800	3648	0.76	1.31	4650	3534	0.76	1.39
20	18	5300	3392	0.64	1.26	5150	3296	0.64	1.33	4975	3184	0.64	1.43
20	20	5700	2964	0.52	1.30	5575	2899	0.52	1.36	5425	2821	0.52	1.46
22	16	4950	4158	0.84	1.24	4800	4032	0.84	1.31	4650	3906	0.84	1.39
22	18	5300	3816	0.72	1.26	5150	3708	0.72	1.33	4975	3582	0.72	1.43
22	20	5700	3420	0.60	1.30	5575	3345	0.60	1.36	5425	3255	0.60	1.46
24	16	4950	4554	0.92	1.24	4800	4416	0.92	1.31	4650	4278	0.92	1.39
24	18	5300	4240	0.80	1.26	5150	4120	0.80	1.33	4975	3980	0.80	1.43
24	20	5700	3876	0.68	1.30	5575	3791	0.68	1.36	5425	3689	0.68	1.46
24	22	6075	3402	0.56	1.33	5950	3332	0.56	1.41	5800	3248	0.56	1.50
26	16	4950	4950	1.00	1.24	4800	4800	1.00	1.31	4650	4650	1.00	1.39
26	18	5300	4664	0.88	1.26	5150	4532	0.88	1.33	4975	4378	0.88	1.43
26	20	5700	4332	0.76	1.30	5575	4237	0.76	1.36	5425	4123	0.76	1.46
26	22	6075	3888	0.64	1.33	5950	3808	0.64	1.41	5800	3712	0.64	1.50
27	16	4950	4950	1.00	1.24	4800	4800	1.00	1.31	4650	4650	1.00	1.39
27	18	5300	4876	0.92	1.26	5150	4738	0.92	1.33	4975	4577	0.92	1.43
27	20	5700	4560	0.80	1.30	5575	4460	0.80	1.36	5425	4340	0.80	1.46
27	22	6075	4131	0.68	1.33	5950	4046	0.68	1.41	5800	3944	0.68	1.50
28	16	4950	4950	1.00	1.24	4800	4800	1.00	1.31	4650	4650	1.00	1.39
28	18	5300	5088	0.96	1.26	5150	4944	0.96	1.33	4975	4776	0.96	1.43
28	20	5700	4788	0.84	1.30	5575	4683	0.84	1.36	5425	4557	0.84	1.46
28	22	6075	4374	0.72	1.33	5950	4284	0.72	1.41	5800	4176	0.72	1.50
30	16	4950	4950	1.00	1.24	4800	4800	1.00	1.31	4650	4650	1.00	1.39
30	18	5300	5300	1.00	1.26	5150	5150	1.00	1.33	4975	4975	1.00	1.43
30	20	5700	5244	0.92	1.30	5575	5129	0.92	1.36	5425	4991	0.92	1.46
30	22	6075	4860	0.80	1.33	5950	4760	0.80	1.41	5800	4640	0.80	1.50
32	16	4950	4950	1.00	1.24	4800	4800	1.00	1.31	4650	4650	1.00	1.39
32	18	5300	5300	1.00	1.26	5150	5150	1.00	1.33	4975	4975	1.00	1.43
32	20	5700	5700	1.00	1.30	5575	5575	1.00	1.36	5425	5425	1.00	1.46
32	22	6075	5346	0.88	1.33	5950	5236	0.88	1.41	5800	5104	0.88	1.50
34	16	4950	4950	1.00	1.24	4800	4800	1.00	1.31	4650	4650	1.00	1.39
34	18	5300	5300	1.00	1.26	5150	5150	1.00	1.33	4975	4975	1.00	1.43
34	20	5700	5700	1.00	1.30	5575	5575	1.00	1.36	5425	5425	1.00	1.46
34	22	6075	5832	0.96	1.33	5950	5712	0.96	1.41	5800	5568	0.96	1.50

NOTE: CA : Capacity (W) SHC: Sensible heat capacity (W)
P.C.: Power consumption (kW) SHF: Sensible heat factor

COOLING CAPACITY
PLA-RP2AA / PUHZ-RP2VHA

(230V)

Indoor intake air D.B.(˚C)	Indoor intake air W.B.(˚C)	Outdoor intale air D.B.(˚C)											
		35				40				45			
		CA	SHC	SHF	P.C.	CA	SHC	SHF	P.C.	CA	SHC	SHF	P.C.
20	16	4450	3382	0.76	1.49	4250	3230	0.76	1.60	4050	3078	0.76	1.73
20	18	4800	3072	0.64	1.53	4650	2976	0.64	1.64	4350	2784	0.64	1.77
20	20	5200	2704	0.52	1.57	5000	2600	0.52	1.67	4700	2444	0.52	1.80
22	16	4450	3738	0.84	1.49	4250	3570	0.84	1.60	4050	3402	0.84	1.73
22	18	4800	3456	0.72	1.53	4650	3348	0.72	1.64	4350	3132	0.72	1.77
22	20	5200	3120	0.60	1.57	5000	3000	0.60	1.67	4700	2820	0.60	1.80
24	16	4450	4094	0.92	1.49	4250	3910	0.92	1.60	4050	3726	0.92	1.73
24	18	4800	3840	0.80	1.53	4650	3720	0.80	1.64	4350	3480	0.80	1.77
24	20	5200	3536	0.68	1.57	5000	3400	0.68	1.67	4700	3196	0.68	1.80
24	22	5600	3136	0.56	1.60	5400	3024	0.56	1.72	5100	2856	0.56	1.83
26	16	4450	4450	1.00	1.49	4250	4250	1.00	1.60	4050	4050	1.00	1.73
26	18	4800	4224	0.88	1.53	4650	4092	0.88	1.64	4350	3828	0.88	1.77
26	20	5200	3952	0.76	1.57	5000	3800	0.76	1.67	4700	3572	0.76	1.80
26	22	5600	3584	0.64	1.60	5400	3456	0.64	1.72	5100	3264	0.64	1.83
27	16	4450	4450	1.00	1.49	4250	4250	1.00	1.60	4050	4050	1.00	1.73
27	18	4800	4416	0.92	1.53	4650	4278	0.92	1.64	4350	4002	0.92	1.77
27	20	5200	4160	0.80	1.57	5000	4000	0.80	1.67	4700	3760	0.80	1.80
27	22	5600	3808	0.68	1.60	5400	3672	0.68	1.72	5100	3468	0.68	1.83
28	16	4450	4450	1.00	1.49	4250	4250	1.00	1.60	4050	4050	1.00	1.73
28	18	4800	4608	0.96	1.53	4650	4464	0.96	1.64	4350	4176	0.96	1.77
28	20	5200	4368	0.84	1.57	5000	4200	0.84	1.67	4700	3948	0.84	1.80
28	22	5600	4032	0.72	1.60	5400	3888	0.72	1.72	5100	3672	0.72	1.83
30	16	4450	4450	1.00	1.49	4250	4250	1.00	1.60	4050	4050	1.00	1.73
30	18	4800	4800	1.00	1.53	4650	4650	1.00	1.64	4350	4350	1.00	1.77
30	20	5200	4784	0.92	1.57	5000	4600	0.92	1.67	4700	4324	0.92	1.80
30	22	5600	4480	0.80	1.60	5400	4320	0.80	1.72	5100	4080	0.80	1.83
32	16	4450	4450	1.00	1.49	4250	4250	1.00	1.60	4050	4050	1.00	1.73
32	18	4800	4800	1.00	1.53	4650	4650	1.00	1.64	4350	4350	1.00	1.77
32	20	5200	5200	1.00	1.57	5000	5000	1.00	1.67	4700	4700	1.00	1.80
32	22	5600	4928	0.88	1.60	5400	4752	0.88	1.72	5100	4488	0.88	1.83
34	16	4450	4450	1.00	1.49	4250	4250	1.00	1.60	4050	4050	1.00	1.73
34	18	4800	4800	1.00	1.53	4650	4650	1.00	1.64	4350	4350	1.00	1.77
34	20	5200	5200	1.00	1.57	5000	5000	1.00	1.67	4700	4700	1.00	1.80
34	22	5600	5376	0.96	1.60	5400	5184	0.96	1.72	5100	4896	0.96	1.83

NOTE: CA : Capacity (W) SHC: Sensible heat capacity (W)
P.C.: Power consumption (kW) SHF: Sensible heat factor

COOLING CAPACITY
PLA-RP2.5AA / PUHZ-RP2.5VHA

(230V)

Indoor intake air D.B.(˚C)	Indoor intake air W.B.(˚C)	Outdoor intale air D.B.(˚C)											
		20				25				30			
		CA	SHC	SHF	P.C.	CA	SHC	SHF	P.C.	CA	SHC	SHF	P.C.
20	16	5940	4039	0.68	1.32	5760	3917	0.68	1.39	5580	3794	0.68	1.48
20	18	6360	3562	0.56	1.34	6180	3461	0.56	1.42	5970	3343	0.56	1.52
20	20	6840	3010	0.44	1.39	6690	2944	0.44	1.45	6510	2864	0.44	1.55
22	16	5940	4514	0.76	1.32	5760	4378	0.76	1.39	5580	4241	0.76	1.48
22	18	6360	4070	0.64	1.34	6180	3955	0.64	1.42	5970	3821	0.64	1.52
22	20	6840	3557	0.52	1.39	6690	3479	0.52	1.45	6510	3385	0.52	1.55
24	16	5940	4990	0.84	1.32	5760	4838	0.84	1.39	5580	4687	0.84	1.48
24	18	6360	4579	0.72	1.34	6180	4450	0.72	1.42	5970	4298	0.72	1.52
24	20	6840	4104	0.60	1.39	6690	4014	0.60	1.45	6510	3906	0.60	1.55
24	22	7290	3499	0.48	1.42	7140	3427	0.48	1.50	6960	3341	0.48	1.60
26	16	5940	5465	0.92	1.32	5760	5299	0.92	1.39	5580	5134	0.92	1.48
26	18	6360	5088	0.80	1.34	6180	4944	0.80	1.42	5970	4776	0.80	1.52
26	20	6840	4651	0.68	1.39	6690	4549	0.68	1.45	6510	4427	0.68	1.55
26	22	7290	4082	0.56	1.42	7140	3998	0.56	1.50	6960	3898	0.56	1.60
27	16	5940	5702	0.96	1.32	5760	5530	0.96	1.39	5580	5357	0.96	1.48
27	18	6360	5342	0.84	1.34	6180	5191	0.84	1.42	5970	5015	0.84	1.52
27	20	6840	4925	0.72	1.39	6690	4817	0.72	1.45	6510	4687	0.72	1.55
27	22	7290	4374	0.60	1.42	7140	4284	0.60	1.50	6960	4176	0.60	1.60
28	16	5940	5940	1.00	1.32	5760	5760	1.00	1.39	5580	5580	1.00	1.48
28	18	6360	5597	0.88	1.34	6180	5438	0.88	1.42	5970	5254	0.88	1.52
28	20	6840	5198	0.76	1.39	6690	5084	0.76	1.45	6510	4948	0.76	1.55
28	22	7290	4666	0.64	1.42	7140	4570	0.64	1.50	6960	4454	0.64	1.60
30	16	5940	5940	1.00	1.32	5760	5760	1.00	1.39	5580	5580	1.00	1.48
30	18	6360	6106	0.96	1.34	6180	5933	0.96	1.42	5970	5731	0.96	1.52
30	20	6840	5746	0.84	1.39	6690	5620	0.84	1.45	6510	5468	0.84	1.55
30	22	7290	5249	0.72	1.42	7140	5141	0.72	1.50	6960	5011	0.72	1.60
32	16	5940	5940	1.00	1.32	5760	5760	1.00	1.39	5580	5580	1.00	1.48
32	18	6360	6360	1.00	1.34	6180	6180	1.00	1.42	5970	5970	1.00	1.52
32	20	6840	6293	0.92	1.39	6690	6155	0.92	1.45	6510	5989	0.92	1.55
32	22	7290	5832	0.80	1.42	7140	5712	0.80	1.50	6960	5568	0.80	1.60
34	16	5940	5940	1.00	1.32	5760	5760	1.00	1.39	5580	5580	1.00	1.48
34	18	6360	6360	1.00	1.34	6180	6180	1.00	1.42	5970	5970	1.00	1.52
34	20	6840	6840	1.00	1.39	6690	6690	1.00	1.45	6510	6510	1.00	1.55
34	22	7290	6415	0.88	1.42	7140	6283	0.88	1.50	6960	6125	0.88	1.60

NOTE: CA : Capacity (W) SHC: Sensible heat capacity (W)
P.C.: Power consumption (kW) SHF: Sensible heat factor

COOLING CAPACITY

PLA-RP2.5AA / PUHZ-RP2.5VHA

(230V)

Indoor intake air D.B.(˚C)	Indoor intake air W.B.(˚C)	Outdoor intale air D.B.(˚C)											
		35				40				45			
		CA	SHC	SHF	P.C.	CA	SHC	SHF	P.C.	CA	SHC	SHF	P.C.
20	16	5340	3631	0.68	1.58	5100	3468	0.68	1.70	4860	3305	0.68	1.84
20	18	5760	3226	0.56	1.63	5580	3125	0.56	1.75	5220	2923	0.56	1.88
20	20	6240	2746	0.44	1.67	6000	2640	0.44	1.78	5640	2482	0.44	1.91
22	16	5340	4058	0.76	1.58	5100	3876	0.76	1.70	4860	3694	0.76	1.84
22	18	5760	3686	0.64	1.63	5580	3571	0.64	1.75	5220	3341	0.64	1.88
22	20	6240	3245	0.52	1.67	6000	3120	0.52	1.78	5640	2933	0.52	1.91
24	16	5340	4486	0.84	1.58	5100	4284	0.84	1.70	4860	4082	0.84	1.84
24	18	5760	4147	0.72	1.63	5580	4018	0.72	1.75	5220	3758	0.72	1.88
24	20	6240	3744	0.60	1.67	6000	3600	0.60	1.78	5640	3384	0.60	1.91
24	22	6720	3226	0.48	1.70	6480	3110	0.48	1.83	6120	2938	0.48	1.95
26	16	5340	4913	0.92	1.58	5100	4692	0.92	1.70	4860	4471	0.92	1.84
26	18	5760	4608	0.80	1.63	5580	4464	0.80	1.75	5220	4176	0.80	1.88
26	20	6240	4243	0.68	1.67	6000	4080	0.68	1.78	5640	3835	0.68	1.91
26	22	6720	3763	0.56	1.70	6480	3629	0.56	1.83	6120	3427	0.56	1.95
27	16	5340	5126	0.96	1.58	5100	4896	0.96	1.70	4860	4666	0.96	1.84
27	18	5760	4838	0.84	1.63	5580	4687	0.84	1.75	5220	4385	0.84	1.88
27	20	6240	4493	0.72	1.67	6000	4320	0.72	1.78	5640	4061	0.72	1.91
27	22	6720	4032	0.60	1.70	6480	3888	0.60	1.83	6120	3672	0.60	1.95
28	16	5340	5340	1.00	1.58	5100	5100	1.00	1.70	4860	4860	1.00	1.84
28	18	5760	5069	0.88	1.63	5580	4910	0.88	1.75	5220	4594	0.88	1.88
28	20	6240	4742	0.76	1.67	6000	4560	0.76	1.78	5640	4286	0.76	1.91
28	22	6720	4301	0.64	1.70	6480	4147	0.64	1.83	6120	3917	0.64	1.95
30	16	5340	5340	1.00	1.58	5100	5100	1.00	1.70	4860	4860	1.00	1.84
30	18	5760	5530	0.96	1.63	5580	5357	0.96	1.75	5220	5011	0.96	1.88
30	20	6240	5242	0.84	1.67	6000	5040	0.84	1.78	5640	4738	0.84	1.91
30	22	6720	4838	0.72	1.70	6480	4666	0.72	1.83	6120	4406	0.72	1.95
32	16	5340	5340	1.00	1.58	5100	5100	1.00	1.70	4860	4860	1.00	1.84
32	18	5760	5760	1.00	1.63	5580	5580	1.00	1.75	5220	5220	1.00	1.88
32	20	6240	5741	0.92	1.67	6000	5520	0.92	1.78	5640	5189	0.92	1.91
32	22	6720	5376	0.80	1.70	6480	5184	0.80	1.83	6120	4896	0.80	1.95
34	16	5340	5340	1.00	1.58	5100	5100	1.00	1.70	4860	4860	1.00	1.84
34	18	5760	5760	1.00	1.63	5580	5580	1.00	1.75	5220	5220	1.00	1.88
34	20	6240	6240	1.00	1.67	6000	6000	1.00	1.78	5640	5640	1.00	1.91
34	22	6720	5914	0.88	1.70	6480	5702	0.88	1.83	6120	5386	0.88	1.95

NOTE: CA : Capacity (W) SHC: Sensible heat capacity (W)
P.C.: Power consumption (kW) SHF: Sensible heat factor

COOLING CAPACITY
PLA-RP3AA / PUHZ-RP3VHA

(230V)

Indoor intake air D.B.(˚C)	Indoor intake air W.B.(˚C)	Outdoor intale air D.B.(˚C)											
		20				25				30			
		CA	SHC	SHF	P.C.	CA	SHC	SHF	P.C.	CA	SHC	SHF	P.C.
20	16	7,029	4,499	0.64	1.58	6,816	4,362	0.64	1.66	6,603	4,226	0.64	1.76
20	18	7,526	3,914	0.52	1.61	7,313	3,803	0.52	1.69	7,065	3,674	0.52	1.81
20	20	8,094	3,238	0.40	1.65	7,917	3,167	0.40	1.73	7,704	3,081	0.40	1.85
22	16	7,029	5,061	0.72	1.58	6,816	4,908	0.72	1.66	6,603	4,754	0.72	1.76
22	18	7,526	4,516	0.60	1.61	7,313	4,388	0.60	1.69	7,065	4,239	0.60	1.81
22	20	8,094	3,885	0.48	1.65	7,917	3,800	0.48	1.73	7,704	3,698	0.48	1.85
24	16	7,029	5,623	0.80	1.58	6,816	5,453	0.80	1.66	6,603	5,282	0.80	1.76
24	18	7,526	5,118	0.68	1.61	7,313	4,973	0.68	1.69	7,065	4,804	0.68	1.81
24	20	8,094	4,533	0.56	1.65	7,917	4,433	0.56	1.73	7,704	4,314	0.56	1.85
24	22	8,627	3,796	0.44	1.69	8,449	3,718	0.44	1.79	8,236	3,624	0.44	1.91
26	16	7,029	6,186	0.88	1.58	6,816	5,998	0.88	1.66	6,603	5,811	0.88	1.76
26	18	7,526	5,720	0.76	1.61	7,313	5,558	0.76	1.69	7,065	5,369	0.76	1.81
26	20	8,094	5,180	0.64	1.65	7,917	5,067	0.64	1.73	7,704	4,930	0.64	1.85
26	22	8,627	4,486	0.52	1.69	8,449	4,393	0.52	1.79	8,236	4,283	0.52	1.91
27	16	7,029	6,467	0.92	1.58	6,816	6,271	0.92	1.66	6,603	6,075	0.92	1.76
27	18	7,526	6,021	0.80	1.61	7,313	5,850	0.80	1.69	7,065	5,652	0.80	1.81
27	20	8,094	5,504	0.68	1.65	7,917	5,383	0.68	1.73	7,704	5,238	0.68	1.85
27	22	8,627	4,831	0.56	1.69	8,449	4,731	0.56	1.79	8,236	4,612	0.56	1.91
28	16	7,029	6,748	0.96	1.58	6,816	6,543	0.96	1.66	6,603	6,339	0.96	1.76
28	18	7,526	6,322	0.84	1.61	7,313	6,143	0.84	1.69	7,065	5,934	0.84	1.81
28	20	8,094	5,828	0.72	1.65	7,917	5,700	0.72	1.73	7,704	5,547	0.72	1.85
28	22	8,627	5,176	0.60	1.69	8,449	5,069	0.60	1.79	8,236	4,942	0.60	1.91
30	16	7,029	7,029	1.00	1.58	6,816	6,816	1.00	1.66	6,603	6,603	1.00	1.76
30	18	7,526	6,924	0.92	1.61	7,313	6,728	0.92	1.69	7,065	6,499	0.92	1.81
30	20	8,094	6,475	0.80	1.65	7,917	6,333	0.80	1.73	7,704	6,163	0.80	1.85
30	22	8,627	5,866	0.68	1.69	8,449	5,745	0.68	1.79	8,236	5,600	0.68	1.91
32	16	7,029	7,029	1.00	1.58	6,816	6,816	1.00	1.66	6,603	6,603	1.00	1.76
32	18	7,526	7,526	1.00	1.61	7,313	7,313	1.00	1.69	7,065	7,065	1.00	1.81
32	20	8,094	7,123	0.88	1.65	7,917	6,967	0.88	1.73	7,704	6,779	0.88	1.85
32	22	8,627	6,556	0.76	1.69	8,449	6,421	0.76	1.79	8,236	6,259	0.76	1.91
34	16	7,029	7,029	1.00	1.58	6,816	6,816	1.00	1.66	6,603	6,603	1.00	1.76
34	18	7,526	7,526	1.00	1.61	7,313	7,313	1.00	1.69	7,065	7,065	1.00	1.81
34	20	8,094	7,770	0.96	1.65	7,917	7,600	0.96	1.73	7,704	7,395	0.96	1.85
34	22	8,627	7,246	0.84	1.69	8,449	7,097	0.84	1.79	8,236	6,918	0.84	1.91

NOTE: CA : Capacity (W) SHC: Sensible heat capacity (W)
P.C.: Power consumption (kW) SHF: Sensible heat factor

COOLING CAPACITY
PLA-RP3AA / PUHZ-RP3VHA

(230V)

Indoor intake air D.B.(˚C)	Indoor intake air W.B.(˚C)	Outdoor intale air D.B.(˚C)											
		35				40				45			
		CA	SHC	SHF	P.C.	CA	SHC	SHF	P.C.	CA	SHC	SHF	P.C.
20	16	6,319	4,044	0.64	1.89	6,035	3,862	0.64	2.03	5,751	3,681	0.64	2.20
20	18	6,816	3,544	0.52	1.94	6,603	3,434	0.52	2.09	6,177	3,212	0.52	2.25
20	20	7,384	2,954	0.40	1.99	7,100	2,840	0.40	2.13	6,674	2,670	0.40	2.29
22	16	6,319	4,550	0.72	1.89	6,035	4,345	0.72	2.03	5,751	4,141	0.72	2.20
22	18	6,816	4,090	0.60	1.94	6,603	3,962	0.60	2.09	6,177	3,706	0.60	2.25
22	20	7,384	3,544	0.48	1.99	7,100	3,408	0.48	2.13	6,674	3,204	0.48	2.29
24	16	6,319	5,055	0.80	1.89	6,035	4,828	0.80	2.03	5,751	4,601	0.80	2.20
24	18	6,816	4,635	0.68	1.94	6,603	4,490	0.68	2.09	6,177	4,200	0.68	2.25
24	20	7,384	4,135	0.56	1.99	7,100	3,976	0.56	2.13	6,674	3,737	0.56	2.29
24	22	7,952	3,499	0.44	2.03	7,668	3,374	0.44	2.19	7,242	3,186	0.44	2.32
26	16	6,319	5,561	0.88	1.89	6,035	5,311	0.88	2.03	5,751	5,061	0.88	2.20
26	18	6,816	5,180	0.76	1.94	6,603	5,018	0.76	2.09	6,177	4,695	0.76	2.25
26	20	7,384	4,726	0.64	1.99	7,100	4,544	0.64	2.13	6,674	4,271	0.64	2.29
26	22	7,952	4,135	0.52	2.03	7,668	3,987	0.52	2.19	7,242	3,766	0.52	2.32
27	16	6,319	5,813	0.92	1.89	6,035	5,552	0.92	2.03	5,751	5,291	0.92	2.20
27	18	6,816	5,453	0.80	1.94	6,603	5,282	0.80	2.09	6,177	4,942	0.80	2.25
27	20	7,384	5,021	0.68	1.99	7,100	4,828	0.68	2.13	6,674	4,538	0.68	2.29
27	22	7,952	4,453	0.56	2.03	7,668	4,294	0.56	2.19	7,242	4,056	0.56	2.32
28	16	6,319	6,066	0.96	1.89	6,035	5,794	0.96	2.03	5,751	5,521	0.96	2.20
28	18	6,816	5,725	0.84	1.94	6,603	5,547	0.84	2.09	6,177	5,189	0.84	2.25
28	20	7,384	5,316	0.72	1.99	7,100	5,112	0.72	2.13	6,674	4,805	0.72	2.29
28	22	7,952	4,771	0.60	2.03	7,668	4,601	0.60	2.19	7,242	4,345	0.60	2.32
30	16	6,319	6,319	1.00	1.89	6,035	6,035	1.00	2.03	5,751	5,751	1.00	2.20
30	18	6,816	6,271	0.92	1.94	6,603	6,075	0.92	2.09	6,177	5,683	0.92	2.25
30	20	7,384	5,907	0.80	1.99	7,100	5,680	0.80	2.13	6,674	5,339	0.80	2.29
30	22	7,952	5,407	0.68	2.03	7,668	5,214	0.68	2.19	7,242	4,925	0.68	2.32
32	16	6,319	6,319	1.00	1.89	6,035	6,035	1.00	2.03	5,751	5,751	1.00	2.20
32	18	6,816	6,816	1.00	1.94	6,603	6,603	1.00	2.09	6,177	6,177	1.00	2.25
32	20	7,384	6,498	0.88	1.99	7,100	6,248	0.88	2.13	6,674	5,873	0.88	2.29
32	22	7,952	6,044	0.76	2.03	7,668	5,828	0.76	2.19	7,242	5,504	0.76	2.32
34	16	6,319	6,319	1.00	1.89	6,035	6,035	1.00	2.03	5,751	5,751	1.00	2.20
34	18	6,816	6,816	1.00	1.94	6,603	6,603	1.00	2.09	6,177	6,177	1.00	2.25
34	20	7,384	7,089	0.96	1.99	7,100	6,816	0.96	2.13	6,674	6,407	0.96	2.29
34	22	7,952	6,680	0.84	2.03	7,668	6,441	0.84	2.19	7,242	6,083	0.84	2.32

NOTE: CA : Capacity (W) SHC: Sensible heat capacity (W)
P.C.: Power consumption (kW) SHF: Sensible heat factor

COOLING CAPACITY
PLA-RP4AA / PUHZ-RP4VHA

(230V)

Indoor intake air D.B.(˚C)	Indoor intake air W.B.(˚C)	Outdoor intale air D.B.(˚C)											
		20				25				30			
		CA	SHC	SHF	P.C.	CA	SHC	SHF	P.C.	CA	SHC	SHF	P.C.
20	16	9,900	6,435	0.65	2.42	9,600	6,240	0.65	2.56	9,300	6,045	0.65	2.71
20	18	10,600	5,618	0.53	2.47	10,300	5,459	0.53	2.61	9,950	5,274	0.53	2.79
20	20	11,400	4,674	0.41	2.55	11,150	4,572	0.41	2.67	10,850	4,449	0.41	2.85
22	16	9,900	7,227	0.73	2.42	9,600	7,008	0.73	2.56	9,300	6,789	0.73	2.71
22	18	10,600	6,466	0.61	2.47	10,300	6,283	0.61	2.61	9,950	6,070	0.61	2.79
22	20	11,400	5,586	0.49	2.55	11,150	5,464	0.49	2.67	10,850	5,317	0.49	2.85
24	16	9,900	8,019	0.81	2.42	9,600	7,776	0.81	2.56	9,300	7,533	0.81	2.71
24	18	10,600	7,314	0.69	2.47	10,300	7,107	0.69	2.61	9,950	6,866	0.69	2.79
24	20	11,400	6,498	0.57	2.55	11,150	6,356	0.57	2.67	10,850	6,185	0.57	2.85
24	22	12,150	5,468	0.45	2.61	11,900	5,355	0.45	2.76	11,600	5,220	0.45	2.94
26	16	9,900	8,811	0.89	2.42	9,600	8,544	0.89	2.56	9,300	8,277	0.89	2.71
26	18	10,600	8,162	0.77	2.47	10,300	7,931	0.77	2.61	9,950	7,662	0.77	2.79
26	20	11,400	7,410	0.65	2.55	11,150	7,248	0.65	2.67	10,850	7,053	0.65	2.85
26	22	12,150	6,440	0.53	2.61	11,900	6,307	0.53	2.76	11,600	6,148	0.53	2.94
27	16	9,900	9,207	0.93	2.42	9,600	8,928	0.93	2.56	9,300	8,649	0.93	2.71
27	18	10,600	8,586	0.81	2.47	10,300	8,343	0.81	2.61	9,950	8,060	0.81	2.79
27	20	11,400	7,866	0.69	2.55	11,150	7,694	0.69	2.67	10,850	7,487	0.69	2.85
27	22	12,150	6,926	0.57	2.61	11,900	6,783	0.57	2.76	11,600	6,612	0.57	2.94
28	16	9,900	9,603	0.97	2.42	9,600	9,312	0.97	2.56	9,300	9,021	0.97	2.71
28	18	10,600	9,010	0.85	2.47	10,300	8,755	0.85	2.61	9,950	8,458	0.85	2.79
28	20	11,400	8,322	0.73	2.55	11,150	8,140	0.73	2.67	10,850	7,921	0.73	2.85
28	22	12,150	7,412	0.61	2.61	11,900	7,259	0.61	2.76	11,600	7,076	0.61	2.94
30	16	9,900	9,900	1.00	2.42	9,600	9,600	1.00	2.56	9,300	9,300	1.00	2.71
30	18	10,600	9,858	0.93	2.47	10,300	9,579	0.93	2.61	9,950	9,254	0.93	2.79
30	20	11,400	9,234	0.81	2.55	11,150	9,032	0.81	2.67	10,850	8,789	0.81	2.85
30	22	12,150	8,384	0.69	2.61	11,900	8,211	0.69	2.76	11,600	8,004	0.69	2.94
32	16	9,900	9,900	1.00	2.42	9,600	9,600	1.00	2.56	9,300	9,300	1.00	2.71
32	18	10,600	10,600	1.00	2.47	10,300	10,300	1.00	2.61	9,950	9,950	1.00	2.79
32	20	11,400	10,146	0.89	2.55	11,150	9,924	0.89	2.67	10,850	9,657	0.89	2.85
32	22	12,150	9,356	0.77	2.61	11,900	9,163	0.77	2.76	11,600	8,932	0.77	2.94
34	16	9,900	9,900	1.00	2.42	9,600	9,600	1.00	2.56	9,300	9,300	1.00	2.71
34	18	10,600	10,600	1.00	2.47	10,300	10,300	1.00	2.61	9,950	9,950	1.00	2.79
34	20	11,400	11,058	0.97	2.55	11,150	10,816	0.97	2.67	10,850	10,525	0.97	2.85
34	22	12,150	10,328	0.85	2.61	11,900	10,115	0.85	2.76	11,600	9,860	0.85	2.94

NOTE: CA : Capacity (W) SHC: Sensible heat capacity (W)
P.C.: Power consumption (kW) SHF: Sensible heat factor

COOLING CAPACITY
PLA-RP4AA / PUHZ-RP4VHA

(230V)

Indoor intake air D.B.(˚C)	Indoor intake air W.B.(˚C)	Outdoor intale air D.B.(˚C)											
		35				40				45			
		CA	SHC	SHF	P.C.	CA	SHC	SHF	P.C.	CA	SHC	SHF	P.C.
20	16	8,900	5,785	0.65	2.91	8,500	5,525	0.65	3.12	8,100	5,265	0.65	3.38
20	18	9,600	5,088	0.53	2.98	9,300	4,929	0.53	3.21	8,700	4,611	0.53	3.45
20	20	10,400	4,264	0.41	3.06	10,000	4,100	0.41	3.27	9,400	3,854	0.41	3.51
22	16	8,900	6,497	0.73	2.91	8,500	6,205	0.73	3.12	8,100	5,913	0.73	3.38
22	18	9,600	5,856	0.61	2.98	9,300	5,673	0.61	3.21	8,700	5,307	0.61	3.45
22	20	10,400	5,096	0.49	3.06	10,000	4,900	0.49	3.27	9,400	4,606	0.49	3.51
24	16	8,900	7,209	0.81	2.91	8,500	6,885	0.81	3.12	8,100	6,561	0.81	3.38
24	18	9,600	6,624	0.69	2.98	9,300	6,417	0.69	3.21	8,700	6,003	0.69	3.45
24	20	10,400	5,928	0.57	3.06	10,000	5,700	0.57	3.27	9,400	5,358	0.57	3.51
24	22	11,200	5,040	0.45	3.12	10,800	4,860	0.45	3.36	10,200	4,590	0.45	3.58
26	16	8,900	7,921	0.89	2.91	8,500	7,565	0.89	3.12	8,100	7,209	0.89	3.38
26	18	9,600	7,392	0.77	2.98	9,300	7,161	0.77	3.21	8,700	6,699	0.77	3.45
26	20	10,400	6,760	0.65	3.06	10,000	6,500	0.65	3.27	9,400	6,110	0.65	3.51
26	22	11,200	5,936	0.53	3.12	10,800	5,724	0.53	3.36	10,200	5,406	0.53	3.58
27	16	8,900	8,277	0.93	2.91	8,500	7,905	0.93	3.12	8,100	7,533	0.93	3.38
27	18	9,600	7,776	0.81	2.98	9,300	7,533	0.81	3.21	8,700	7,047	0.81	3.45
27	20	10,400	7,176	0.69	3.06	10,000	6,900	0.69	3.27	9,400	6,486	0.69	3.51
27	22	11,200	6,384	0.57	3.12	10,800	6,156	0.57	3.36	10,200	5,814	0.57	3.58
28	16	8,900	8,633	0.97	2.91	8,500	8,245	0.97	3.12	8,100	7,857	0.97	3.38
28	18	9,600	8,160	0.85	2.98	9,300	7,905	0.85	3.21	8,700	7,395	0.85	3.45
28	20	10,400	7,592	0.73	3.06	10,000	7,300	0.73	3.27	9,400	6,862	0.73	3.51
28	22	11,200	6,832	0.61	3.12	10,800	6,588	0.61	3.36	10,200	6,222	0.61	3.58
30	16	8,900	8,900	1.00	2.91	8,500	8,500	1.00	3.12	8,100	8,100	1.00	3.38
30	18	9,600	8,928	0.93	2.98	9,300	8,649	0.93	3.21	8,700	8,091	0.93	3.45
30	20	10,400	8,424	0.81	3.06	10,000	8,100	0.81	3.27	9,400	7,614	0.81	3.51
30	22	11,200	7,728	0.69	3.12	10,800	7,452	0.69	3.36	10,200	7,038	0.69	3.58
32	16	8,900	8,900	1.00	2.91	8,500	8,500	1.00	3.12	8,100	8,100	1.00	3.38
32	18	9,600	9,600	1.00	2.98	9,300	9,300	1.00	3.21	8,700	8,700	1.00	3.45
32	20	10,400	9,256	0.89	3.06	10,000	8,900	0.89	3.27	9,400	8,366	0.89	3.51
32	22	11,200	8,624	0.77	3.12	10,800	8,316	0.77	3.36	10,200	7,854	0.77	3.58
34	16	8,900	8,900	1.00	2.91	8,500	8,500	1.00	3.12	8,100	8,100	1.00	3.38
34	18	9,600	9,600	1.00	2.98	9,300	9,300	1.00	3.21	8,700	8,700	1.00	3.45
34	20	10,400	10,088	0.97	3.06	10,000	9,700	0.97	3.27	9,400	9,118	0.97	3.51
34	22	11,200	9,520	0.85	3.12	10,800	9,180	0.85	3.36	10,200	8,670	0.85	3.58

NOTE: CA : Capacity (W) SHC: Sensible heat capacity (W)
P.C.: Power consumption (kW) SHF: Sensible heat factor

COOLING CAPACITY
PLA-RP5AA / PUHZ-RP5VHA

(230V)

Indoor intake air D.B.(˚C)	Indoor intake air W.B.(˚C)	Outdoor intale air D.B.(˚C)											
		20				25				30			
		CA	SHC	SHF	P.C.	CA	SHC	SHF	P.C.	CA	SHC	SHF	P.C.
20	16	12,375	7,920	0.64	3.11	12,000	7,680	0.64	3.29	11,625	7,440	0.64	3.48
20	18	13,250	6,890	0.52	3.17	12,875	6,695	0.52	3.35	12,438	6,468	0.52	3.58
20	20	14,250	5,700	0.40	3.27	13,938	5,575	0.40	3.42	13,563	5,425	0.40	3.66
22	16	12,375	8,910	0.72	3.11	12,000	8,640	0.72	3.29	11,625	8,370	0.72	3.48
22	18	13,250	7,950	0.60	3.17	12,875	7,725	0.60	3.35	12,438	7,463	0.60	3.58
22	20	14,250	6,840	0.48	3.27	13,938	6,690	0.48	3.42	13,563	6,510	0.48	3.66
24	16	12,375	9,900	0.80	3.11	12,000	9,600	0.80	3.29	11,625	9,300	0.80	3.48
24	18	13,250	9,010	0.68	3.17	12,875	8,755	0.68	3.35	12,438	8,458	0.68	3.58
24	20	14,250	7,980	0.56	3.27	13,938	7,805	0.56	3.42	13,563	7,595	0.56	3.66
24	22	15,188	6,683	0.44	3.35	14,875	6,545	0.44	3.54	14,500	6,380	0.44	3.77
26	16	12,375	10,890	0.88	3.11	12,000	10,560	0.88	3.29	11,625	10,230	0.88	3.48
26	18	13,250	10,070	0.76	3.17	12,875	9,785	0.76	3.35	12,438	9,453	0.76	3.58
26	20	14,250	9,120	0.64	3.27	13,938	8,920	0.64	3.42	13,563	8,680	0.64	3.66
26	22	15,188	7,898	0.52	3.35	14,875	7,735	0.52	3.54	14,500	7,540	0.52	3.77
27	16	12,375	11,385	0.92	3.11	12,000	11,040	0.92	3.29	11,625	10,695	0.92	3.48
27	18	13,250	10,600	0.80	3.17	12,875	10,300	0.80	3.35	12,438	9,950	0.80	3.58
27	20	14,250	9,690	0.68	3.27	13,938	9,478	0.68	3.42	13,563	9,223	0.68	3.66
27	22	15,188	8,505	0.56	3.35	14,875	8,330	0.56	3.54	14,500	8,120	0.56	3.77
28	16	12,375	11,880	0.96	3.11	12,000	11,520	0.96	3.29	11,625	11,160	0.96	3.48
28	18	13,250	11,130	0.84	3.17	12,875	10,815	0.84	3.35	12,438	10,448	0.84	3.58
28	20	14,250	10,260	0.72	3.27	13,938	10,035	0.72	3.42	13,563	9,765	0.72	3.66
28	22	15,188	9,113	0.60	3.35	14,875	8,925	0.60	3.54	14,500	8,700	0.60	3.77
30	16	12,375	12,375	1.00	3.11	12,000	12,000	1.00	3.29	11,625	11,625	1.00	3.48
30	18	13,250	12,190	0.92	3.17	12,875	11,845	0.92	3.35	12,438	11,443	0.92	3.58
30	20	14,250	11,400	0.80	3.27	13,938	11,150	0.80	3.42	13,563	10,850	0.80	3.66
30	22	15,188	10,328	0.68	3.35	14,875	10,115	0.68	3.54	14,500	9,860	0.68	3.77
32	16	12,375	12,375	1.00	3.11	12,000	12,000	1.00	3.29	11,625	11,625	1.00	3.48
32	18	13,250	13,250	1.00	3.17	12,875	12,875	1.00	3.35	12,438	12,438	1.00	3.58
32	20	14,250	12,540	0.88	3.27	13,938	12,265	0.88	3.42	13,563	11,935	0.88	3.66
32	22	15,188	11,543	0.76	3.35	14,875	11,305	0.76	3.54	14,500	11,020	0.76	3.77
34	16	12,375	12,375	1.00	3.11	12,000	12,000	1.00	3.29	11,625	11,625	1.00	3.48
34	18	13,250	13,250	1.00	3.17	12,875	12,875	1.00	3.35	12,438	12,438	1.00	3.58
34	20	14,250	13,680	0.96	3.27	13,938	13,380	0.96	3.42	13,563	13,020	0.96	3.66
34	22	15,188	12,758	0.84	3.35	14,875	12,495	0.84	3.54	14,500	12,180	0.84	3.77

NOTE: CA : Capacity (W) SHC: Sensible heat capacity (W)
P.C.: Power consumption (kW) SHF: Sensible heat factor

COOLING CAPACITY
PLA-RP5AA / PUHZ-RP5VHA

(230V)

Indoor intake air D.B.(˚C)	Indoor intake air W.B.(˚C)	Outdoor intale air D.B.(˚C)											
		35				40				45			
		CA	SHC	SHF	P.C.	CA	SHC	SHF	P.C.	CA	SHC	SHF	P.C.
20	16	11,125	7,120	0.64	3.73	10,625	6,800	0.64	4.01	10,125	6,480	0.64	4.34
20	18	12,000	6,240	0.52	3.83	11,625	6,045	0.52	4.12	10,875	5,655	0.52	4.43
20	20	13,000	5,200	0.40	3.93	12,500	5,000	0.40	4.20	11,750	4,700	0.40	4.51
22	16	11,125	8,010	0.72	3.73	10,625	7,650	0.72	4.01	10,125	7,290	0.72	4.34
22	18	12,000	7,200	0.60	3.83	11,625	6,975	0.60	4.12	10,875	6,525	0.60	4.43
22	20	13,000	6,240	0.48	3.93	12,500	6,000	0.48	4.20	11,750	5,640	0.48	4.51
24	16	11,125	8,900	0.80	3.73	10,625	8,500	0.80	4.01	10,125	8,100	0.80	4.34
24	18	12,000	8,160	0.68	3.83	11,625	7,905	0.68	4.12	10,875	7,395	0.68	4.43
24	20	13,000	7,280	0.56	3.93	12,500	7,000	0.56	4.20	11,750	6,580	0.56	4.51
24	22	14,000	6,160	0.44	4.01	13,500	5,940	0.44	4.32	12,750	5,610	0.44	4.59
26	16	11,125	9,790	0.88	3.73	10,625	9,350	0.88	4.01	10,125	8,910	0.88	4.34
26	18	12,000	9,120	0.76	3.83	11,625	8,835	0.76	4.12	10,875	8,265	0.76	4.43
26	20	13,000	8,320	0.64	3.93	12,500	8,000	0.64	4.20	11,750	7,520	0.64	4.51
26	22	14,000	7,280	0.52	4.01	13,500	7,020	0.52	4.32	12,750	6,630	0.52	4.59
27	16	11,125	10,235	0.92	3.73	10,625	9,775	0.92	4.01	10,125	9,315	0.92	4.34
27	18	12,000	9,600	0.80	3.83	11,625	9,300	0.80	4.12	10,875	8,700	0.80	4.43
27	20	13,000	8,840	0.68	3.93	12,500	8,500	0.68	4.20	11,750	7,990	0.68	4.51
27	22	14,000	7,840	0.56	4.01	13,500	7,560	0.56	4.32	12,750	7,140	0.56	4.59
28	16	11,125	10,680	0.96	3.73	10,625	10,200	0.96	4.01	10,125	9,720	0.96	4.34
28	18	12,000	10,080	0.84	3.83	11,625	9,765	0.84	4.12	10,875	9,135	0.84	4.43
28	20	13,000	9,360	0.72	3.93	12,500	9,000	0.72	4.20	11,750	8,460	0.72	4.51
28	22	14,000	8,400	0.60	4.01	13,500	8,100	0.60	4.32	12,750	7,650	0.60	4.59
30	16	11,125	11,125	1.00	3.73	10,625	10,625	1.00	4.01	10,125	10,125	1.00	4.34
30	18	12,000	11,040	0.92	3.83	11,625	10,695	0.92	4.12	10,875	10,005	0.92	4.43
30	20	13,000	10,400	0.80	3.93	12,500	10,000	0.80	4.20	11,750	9,400	0.80	4.51
30	22	14,000	9,520	0.68	4.01	13,500	9,180	0.68	4.32	12,750	8,670	0.68	4.59
32	16	11,125	11,125	1.00	3.73	10,625	10,625	1.00	4.01	10,125	10,125	1.00	4.34
32	18	12,000	12,000	1.00	3.83	11,625	11,625	1.00	4.12	10,875	10,875	1.00	4.43
32	20	13,000	11,440	0.88	3.93	12,500	11,000	0.88	4.20	11,750	10,340	0.88	4.51
32	22	14,000	10,640	0.76	4.01	13,500	10,260	0.76	4.32	12,750	9,690	0.76	4.59
34	16	11,125	11,125	1.00	3.73	10,625	10,625	1.00	4.01	10,125	10,125	1.00	4.34
34	18	12,000	12,000	1.00	3.83	11,625	11,625	1.00	4.12	10,875	10,875	1.00	4.43
34	20	13,000	12,480	0.96	3.93	12,500	12,000	0.96	4.20	11,750	11,280	0.96	4.51
34	22	14,000	11,760	0.84	4.01	13,500	11,340	0.84	4.32	12,750	10,710	0.84	4.59

NOTE: CA : Capacity (W) SHC: Sensible heat capacity (W)
P.C.: Power consumption (kW) SHF: Sensible heat factor

COOLING CAPACITY
PLA-RP6AA / PUHZ-RP6VHA

(230V)

Indoor intake air D.B.(˚C)	Indoor intake air W.B.(˚C)	Outdoor intale air D.B.(˚C)											
		20				25				30			
		CA	SHC	SHF	P.C.	CA	SHC	SHF	P.C.	CA	SHC	SHF	P.C.
20	16	13,860	8,455	0.61	3.99	13,440	8,198	0.61	4.22	13,020	7,942	0.61	4.47
20	18	14,840	7,272	0.49	4.07	14,420	7,066	0.49	4.29	13,930	6,826	0.49	4.59
20	20	15,960	5,905	0.37	4.19	15,610	5,776	0.37	4.39	15,190	5,620	0.37	4.69
22	16	13,860	9,563	0.69	3.99	13,440	9,274	0.69	4.22	13,020	8,984	0.69	4.47
22	18	14,840	8,459	0.57	4.07	14,420	8,219	0.57	4.29	13,930	7,940	0.57	4.59
22	20	15,960	7,182	0.45	4.19	15,610	7,025	0.45	4.39	15,190	6,836	0.45	4.69
24	16	13,860	10,672	0.77	3.99	13,440	10,349	0.77	4.22	13,020	10,025	0.77	4.47
24	18	14,840	9,646	0.65	4.07	14,420	9,373	0.65	4.29	13,930	9,055	0.65	4.59
24	20	15,960	8,459	0.53	4.19	15,610	8,273	0.53	4.39	15,190	8,051	0.53	4.69
24	22	17,010	6,974	0.41	4.29	16,660	6,831	0.41	4.54	16,240	6,658	0.41	4.84
26	16	13,860	11,781	0.85	3.99	13,440	11,424	0.85	4.22	13,020	11,067	0.85	4.47
26	18	14,840	10,833	0.73	4.07	14,420	10,527	0.73	4.29	13,930	10,169	0.73	4.59
26	20	15,960	9,736	0.61	4.19	15,610	9,522	0.61	4.39	15,190	9,266	0.61	4.69
26	22	17,010	8,335	0.49	4.29	16,660	8,163	0.49	4.54	16,240	7,958	0.49	4.84
27	16	13,860	12,335	0.89	3.99	13,440	11,962	0.89	4.22	13,020	11,588	0.89	4.47
27	18	14,840	11,427	0.77	4.07	14,420	11,103	0.77	4.29	13,930	10,726	0.77	4.59
27	20	15,960	10,374	0.65	4.19	15,610	10,147	0.65	4.39	15,190	9,874	0.65	4.69
27	22	17,010	9,015	0.53	4.29	16,660	8,830	0.53	4.54	16,240	8,607	0.53	4.84
28	16	13,860	12,890	0.93	3.99	13,440	12,499	0.93	4.22	13,020	12,109	0.93	4.47
28	18	14,840	12,020	0.81	4.07	14,420	11,680	0.81	4.29	13,930	11,283	0.81	4.59
28	20	15,960	11,012	0.69	4.19	15,610	10,771	0.69	4.39	15,190	10,481	0.69	4.69
28	22	17,010	9,696	0.57	4.29	16,660	9,496	0.57	4.54	16,240	9,257	0.57	4.84
30	16	13,860	13,860	1.00	3.99	13,440	13,440	1.00	4.22	13,020	13,020	1.00	4.47
30	18	14,840	13,208	0.89	4.07	14,420	12,834	0.89	4.29	13,930	12,398	0.89	4.59
30	20	15,960	12,289	0.77	4.19	15,610	12,020	0.77	4.39	15,190	11,696	0.77	4.69
30	22	17,010	11,057	0.65	4.29	16,660	10,829	0.65	4.54	16,240	10,556	0.65	4.84
32	16	13,860	13,860	1.00	3.99	13,440	13,440	1.00	4.22	13,020	13,020	1.00	4.47
32	18	14,840	14,395	0.97	4.07	14,420	13,987	0.97	4.29	13,930	13,512	0.97	4.59
32	20	15,960	13,566	0.85	4.19	15,610	13,269	0.85	4.39	15,190	12,912	0.85	4.69
32	22	17,010	12,417	0.73	4.29	16,660	12,162	0.73	4.54	16,240	11,855	0.73	4.84
34	16	13,860	13,860	1.00	3.99	13,440	13,440	1.00	4.22	13,020	13,020	1.00	4.47
34	18	14,840	14,840	1.00	4.07	14,420	14,420	1.00	4.29	13,930	13,930	1.00	4.59
34	20	15,960	14,843	0.93	4.19	15,610	14,517	0.93	4.39	15,190	14,127	0.93	4.69
34	22	17,010	13,778	0.81	4.29	16,660	13,495	0.81	4.54	16,240	13,154	0.81	4.84

NOTE: CA : Capacity (W) SHC: Sensible heat capacity (W)
P.C.: Power consumption (kW) SHF: Sensible heat factor

COOLING CAPACITY
PLA-RP6AA / PUHZ-RP6VHA

(230V)

Indoor intake air D.B.(˚C)	Indoor intake air W.B.(˚C)	Outdoor intale air D.B.(˚C)											
		35				40				45			
		CA	SHC	SHF	P.C.	CA	SHC	SHF	P.C.	CA	SHC	SHF	P.C.
20	16	12,460	7,601	0.61	4.79	11,900	7,259	0.61	5.14	11,340	6,917	0.61	5.56
20	18	13,440	6,586	0.49	4.92	13,020	6,380	0.49	5.29	12,180	5,968	0.49	5.69
20	20	14,560	5,387	0.37	5.04	14,000	5,180	0.37	5.39	13,160	4,869	0.37	5.79
22	16	12,460	8,597	0.69	4.79	11,900	8,211	0.69	5.14	11,340	7,825	0.69	5.56
22	18	13,440	7,661	0.57	4.92	13,020	7,421	0.57	5.29	12,180	6,943	0.57	5.69
22	20	14,560	6,552	0.45	5.04	14,000	6,300	0.45	5.39	13,160	5,922	0.45	5.79
24	16	12,460	9,594	0.77	4.79	11,900	9,163	0.77	5.14	11,340	8,732	0.77	5.56
24	18	13,440	8,736	0.65	4.92	13,020	8,463	0.65	5.29	12,180	7,917	0.65	5.69
24	20	14,560	7,717	0.53	5.04	14,000	7,420	0.53	5.39	13,160	6,975	0.53	5.79
24	22	15,680	6,429	0.41	5.14	15,120	6,199	0.41	5.54	14,280	5,855	0.41	5.89
26	16	12,460	10,591	0.85	4.79	11,900	10,115	0.85	5.14	11,340	9,639	0.85	5.56
26	18	13,440	9,811	0.73	4.92	13,020	9,505	0.73	5.29	12,180	8,891	0.73	5.69
26	20	14,560	8,882	0.61	5.04	14,000	8,540	0.61	5.39	13,160	8,028	0.61	5.79
26	22	15,680	7,683	0.49	5.14	15,120	7,409	0.49	5.54	14,280	6,997	0.49	5.89
27	16	12,460	11,089	0.89	4.79	11,900	10,591	0.89	5.14	11,340	10,093	0.89	5.56
27	18	13,440	10,349	0.77	4.92	13,020	10,025	0.77	5.29	12,180	9,379	0.77	5.69
27	20	14,560	9,464	0.65	5.04	14,000	9,100	0.65	5.39	13,160	8,554	0.65	5.79
27	22	15,680	8,310	0.53	5.14	15,120	8,014	0.53	5.54	14,280	7,568	0.53	5.89
28	16	12,460	11,588	0.93	4.79	11,900	11,067	0.93	5.14	11,340	10,546	0.93	5.56
28	18	13,440	10,886	0.81	4.92	13,020	10,546	0.81	5.29	12,180	9,866	0.81	5.69
28	20	14,560	10,046	0.69	5.04	14,000	9,660	0.69	5.39	13,160	9,080	0.69	5.79
28	22	15,680	8,938	0.57	5.14	15,120	8,618	0.57	5.54	14,280	8,140	0.57	5.89
30	16	12,460	12,460	1.00	4.79	11,900	11,900	1.00	5.14	11,340	11,340	1.00	5.56
30	18	13,440	11,962	0.89	4.92	13,020	11,588	0.89	5.29	12,180	10,840	0.89	5.69
30	20	14,560	11,211	0.77	5.04	14,000	10,780	0.77	5.39	13,160	10,133	0.77	5.79
30	22	15,680	10,192	0.65	5.14	15,120	9,828	0.65	5.54	14,280	9,282	0.65	5.89
32	16	12,460	12,460	1.00	4.79	11,900	11,900	1.00	5.14	11,340	11,340	1.00	5.56
32	18	13,440	13,037	0.97	4.92	13,020	12,629	0.97	5.29	12,180	11,815	0.97	5.69
32	20	14,560	12,376	0.85	5.04	14,000	11,900	0.85	5.39	13,160	11,186	0.85	5.79
32	22	15,680	11,446	0.73	5.14	15,120	11,038	0.73	5.54	14,280	10,424	0.73	5.89
34	16	12,460	12,460	1.00	4.79	11,900	11,900	1.00	5.14	11,340	11,340	1.00	5.56
34	18	13,440	13,440	1.00	4.92	13,020	13,020	1.00	5.29	12,180	12,180	1.00	5.69
34	20	14,560	13,541	0.93	5.04	14,000	13,020	0.93	5.39	13,160	12,239	0.93	5.79
34	22	15,680	12,701	0.81	5.14	15,120	12,247	0.81	5.54	14,280	11,567	0.81	5.89

NOTE: CA : Capacity (W) SHC: Sensible heat capacity (W)
P.C.: Power consumption (kW) SHF: Sensible heat factor

HEATING CAPACITY
PLA-RP•AA / PUHZ-RP•VHA

(230V)

Service Ref.	Indoor intake are D.B. (˚C)	Outdoor intake air W.B. (˚C)											
		-10		-5		0		5		10		15	
		CA	P.C.	CA	P.C.	CA	P.C.	CA	P.C.	CA	P.C.	CA	P.C.
PLA-RP1.6AA	15	2,604	0.66	2,829	0.73	3,157	0.84	4,141	1.01	4,674	1.12	5,207	1.21
	20	2,501	0.72	2,706	0.78	2,993	0.91	3,998	1.09	4,510	1.21	5,023	1.30
	25	2,419	0.76	2,624	0.85	2,870	0.99	3,772	1.15	4,346	1.29	4,838	1.39
PLA-RP2AA	15	3,810	0.96	4,140	1.05	4,620	1.22	6,060	1.46	6,840	1.62	7,620	1.75
	20	3,660	1.04	3,960	1.13	4,380	1.31	5,850	1.57	6,600	1.75	7,350	1.88
	25	3,540	1.10	3,840	1.23	4,200	1.43	5,520	1.67	6,360	1.87	7,080	2.02
PLA-RP2.5AA	15	4,445	1.09	4,830	1.20	5,390	1.39	7,070	1.67	7,980	1.85	8,890	2.00
	20	4,270	1.18	4,620	1.30	5,110	1.50	6,825	1.79	7,700	2.00	8,575	2.15
	25	4,130	1.26	4,480	1.23	4,900	1.63	6,440	1.91	7,420	2.14	8,260	2.30
PLA-RP3AA	15	5,080	1.38	5,520	1.52	6,160	1.76	8,080	2.11	9,120	2.34	10,160	2.53
	20	4,880	1.50	5,280	1.64	5,840	1.90	7,800	2.27	8,800	2.53	9,800	2.71
	25	4,720	1.59	5,120	1.78	5,600	2.06	7,360	2.41	8,480	2.70	9,440	2.91
PLA-RP4AA	15	7,112	2.00	7,728	2.20	8,624	2.54	11,312	3.05	12,768	3.39	14,224	3.66
	20	6,832	2.17	7,392	2.37	8,176	2.75	10,920	3.29	12,320	3.66	13,720	3.93
	25	6,608	2.31	7,168	2.58	7,840	2.98	10,304	3.49	11,872	3.92	13,216	4.22
PLA-RP5AA	15	8,890	2.52	9,660	2.78	10,780	3.20	14,140	3.84	15,960	4.27	17,780	4.61
	20	8,540	2.73	9,240	2.99	10,220	3.46	13,650	4.14	15,400	4.61	17,150	4.95
	25	8,260	2.90	8,960	3.25	9,800	3.76	12,880	4.40	14,840	4.93	16,520	5.32
PLA-RP6AA	15	10,160	2.90	11,040	3.19	12,320	3.68	16,160	4.42	18,240	4.91	20,320	5.30
	20	9,760	3.14	10,560	3.44	11,680	3.98	15,600	4.76	17,600	5.30	19,600	5.70
	25	9,440	3.34	10,240	3.73	11,200	4.32	14,720	5.06	16,960	5.67	18,880	6.11

NOTE: CA: Capacity (W) P.C.: Power consumption (kW)

Cooling performance curve(50Hz)

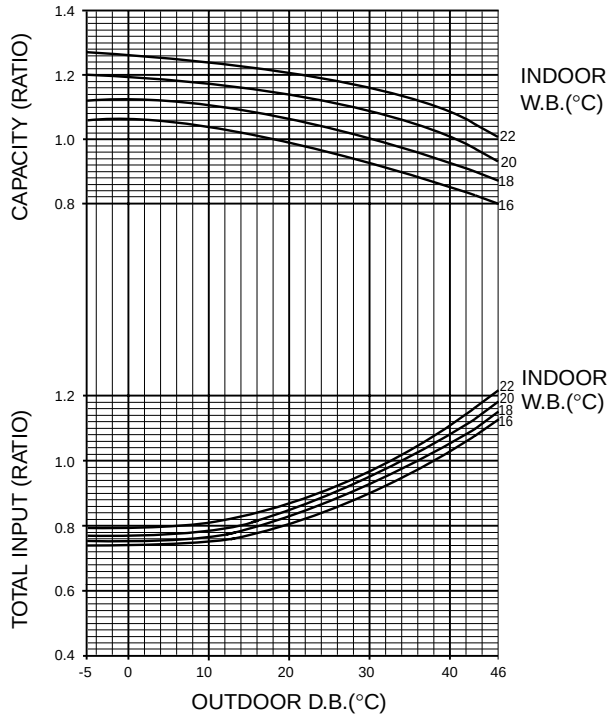

Heating performance curve(50Hz)

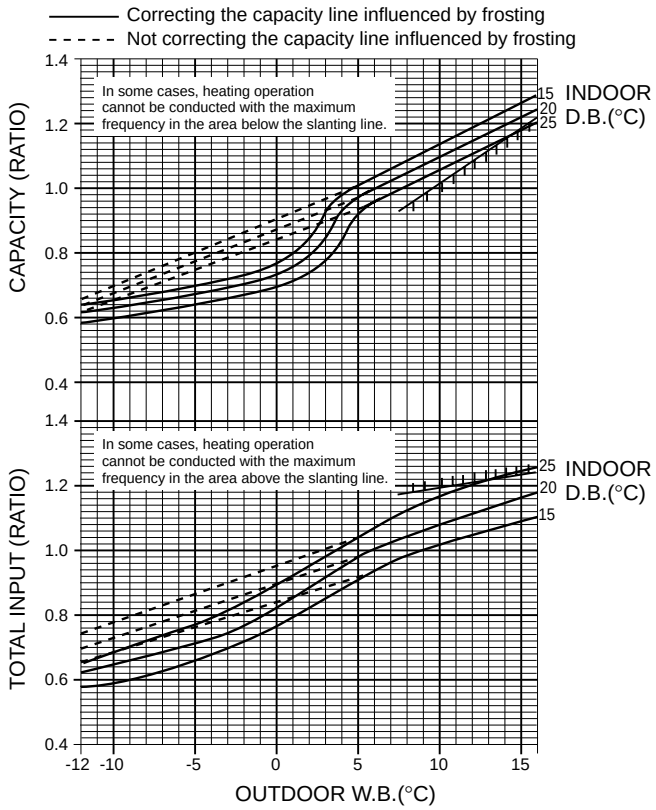

A.1.7 FRESH AIR INTAKE AMOUNT

1. Adjusting the width of the air outlets

- **Change of outlet numbers**
  [The optional air outlet shutter is necessary.]

  To change the air outlet numbers to 3-, or 2-way outlet, the outlets should be closed with the optional air outlet shutter.)

  (When the air outlets are closed, close the vane by removing the vane connector.)

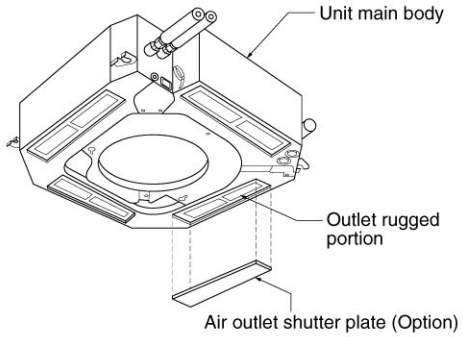

- **For the portion to be cut (V-shaped groove), see the figure below (as seen from the rear of the panel).**

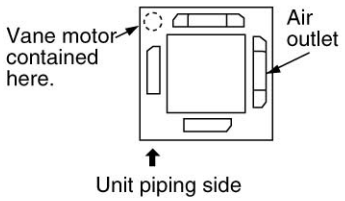

2. Fresh air intake (Installation of site)

- By mounting the optional multi-function casement to the indoor unit main body, and mounting the duct and duct flange (field supply) onto it further, fresh exterior air intake can be accomplished.
  (The mounting of the multi-function casement increases the height of the ceiling plenum by 135mm.)

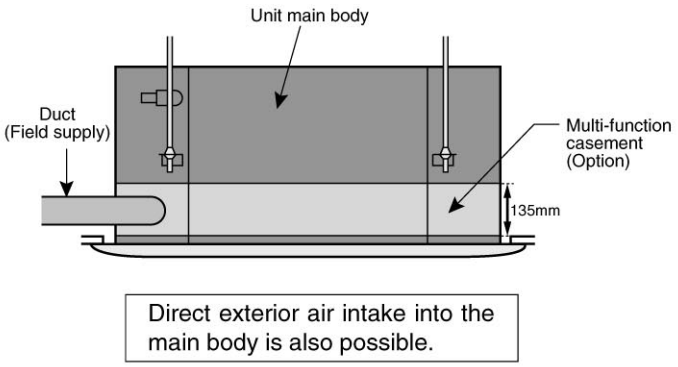

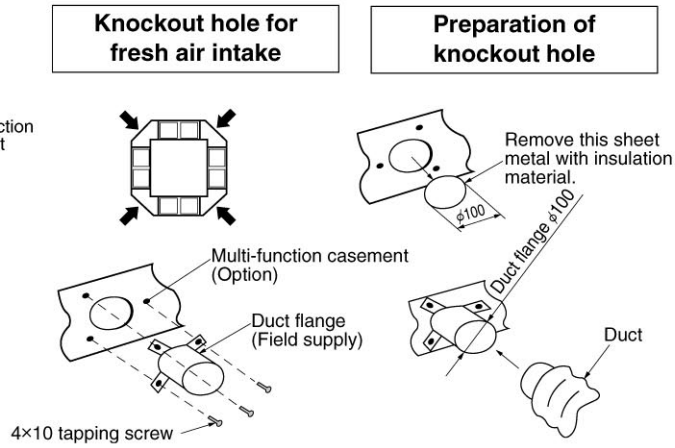

3. Fresh air intake volume & static pressure characteristics

① PLA-RP3AA
(at using of multi-function casement, standard filter)

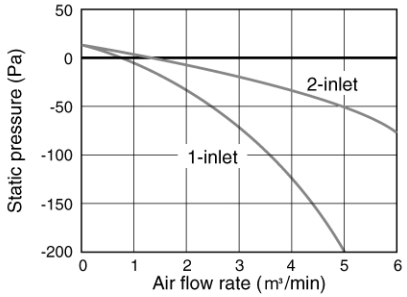

② PLA-RP3AA (Direct intake to unit)

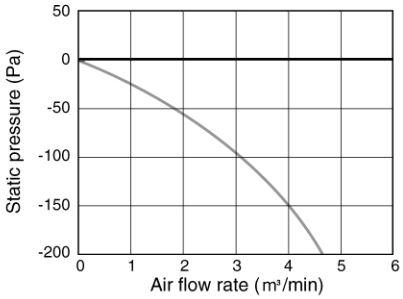

③ PLA-RP4/RP5/RP6AA
(at using of multi-function casement, standard filter)

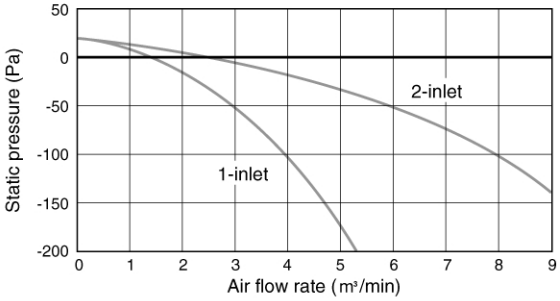

④ PLA-RP4/RP5/RP6AA (Direct intake to unit)

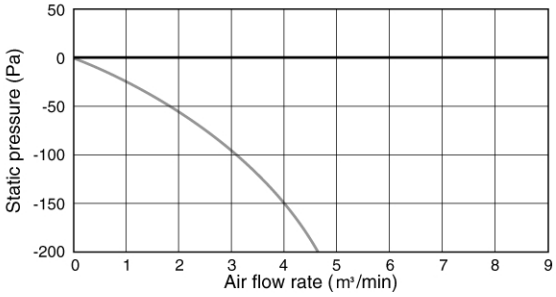

How to read the chart

(1)

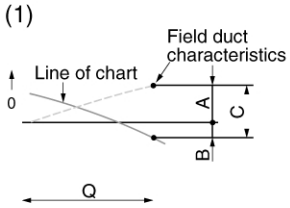

(2)

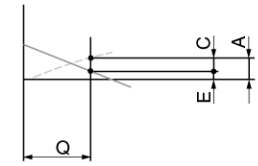

(3)

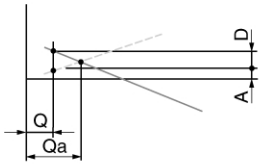

Q .... Design fresh air intake volume (m³/min)

A ..... Static pressure loss [Pa] of fesh air intake duct at air flow rate of Q

B ..... Required boost pressure [Pa] of air conditioner inlet at air flow rate of Q

C ..... Required static pressure [Pa] of booster fan at air flow rate of Q

D ..... Required compensation [Pa] for static prssure loss of fresh air intake duct to make air flow rate Q

E ..... Static pressure [Pa] of indoor unit at air flow rate of Q

Qa .. Estimated fresh air intake [m³/min] without compensation of D

A.1.8 BRANCH DUCT(Installation at site)

To be compatible with both round and rectangular branch ducts, knockout holes are designed to fit to both shapes for flexible on-site installation.

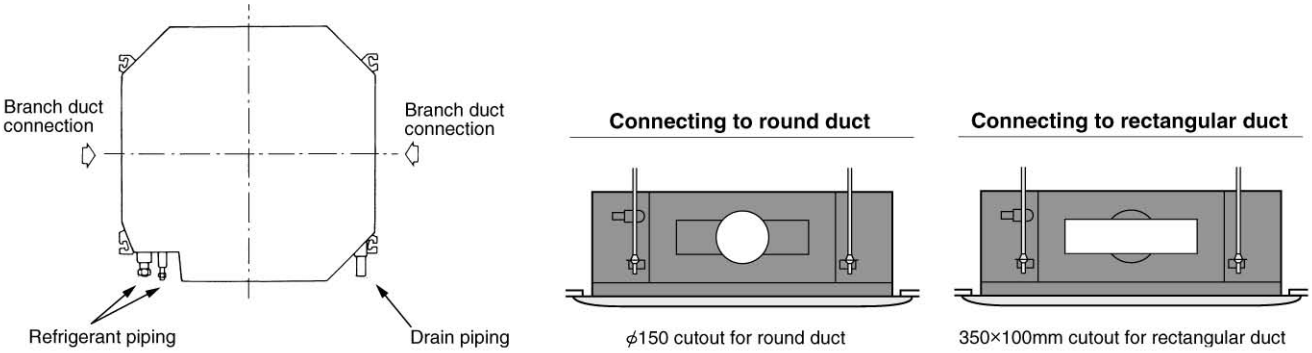

Branch duct air flow rate/static pressure charcteristics

PLA-RP1.6AA

4-wey air flow(horizontal vane)Rectangular duct

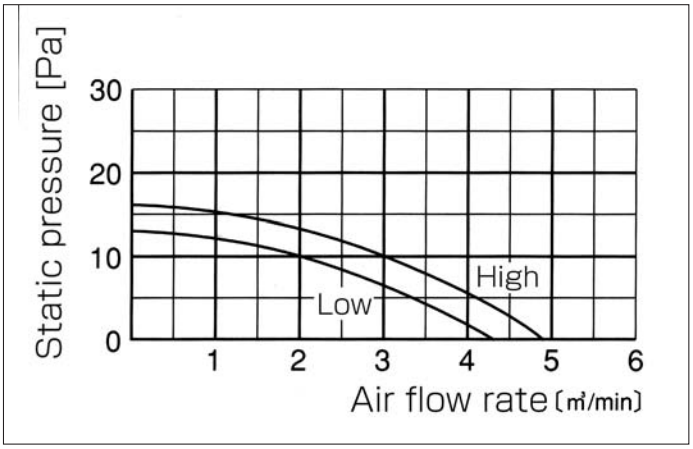

4-way air flow(horizontal vane)Round duct

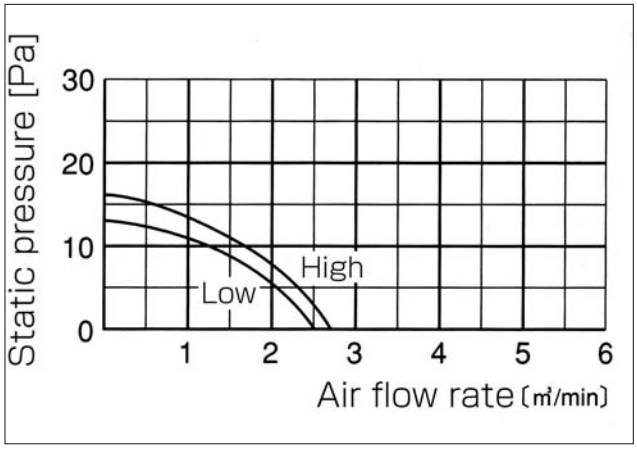

3-way air flow(horizontal vane)Rectangular duct

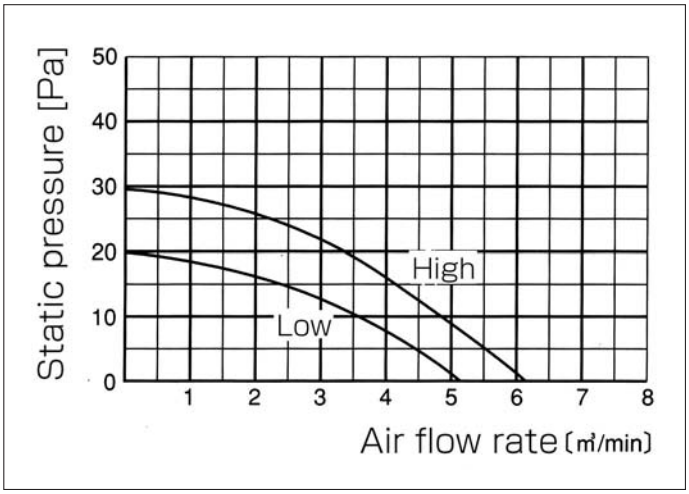

3-way air flow(horizontal vane)Round duct

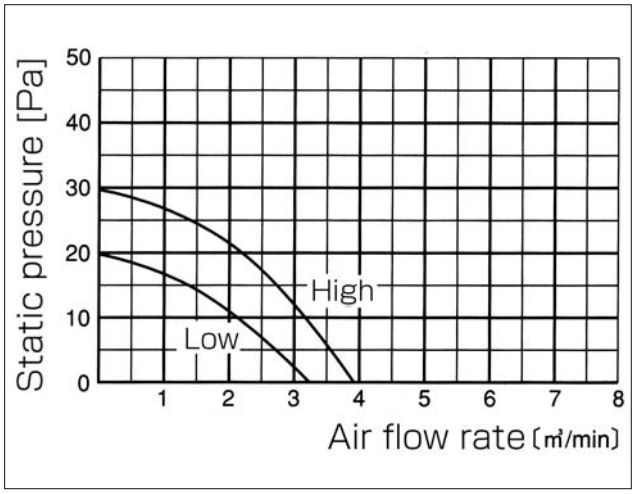

2-way air flow(horizontal vane)Rectangular duct

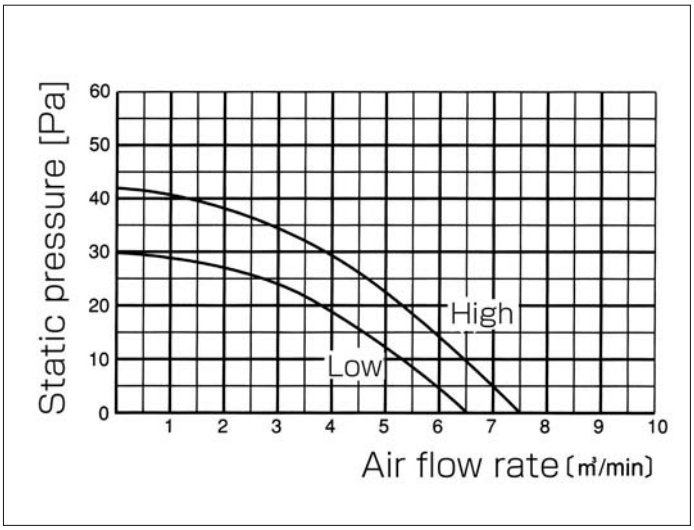

2-way air flow(horizontal vane)Round duct

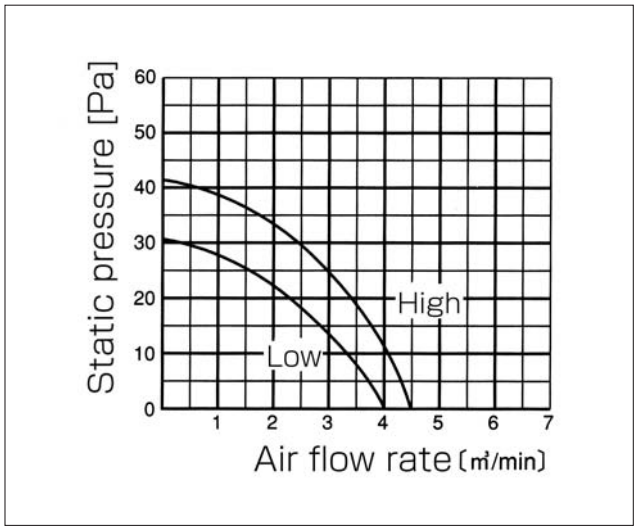

PLA-RP2AA
PLA-RP2.5AA

4-way air flow(horizontal vane)Rectangular duct

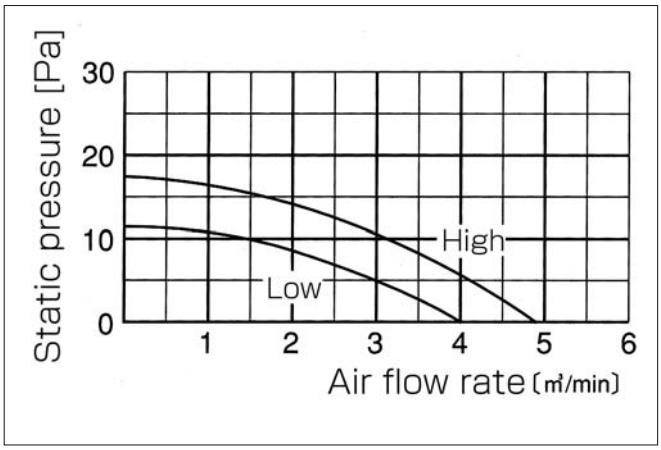

4-way air flow(horizontal vane)Round duct

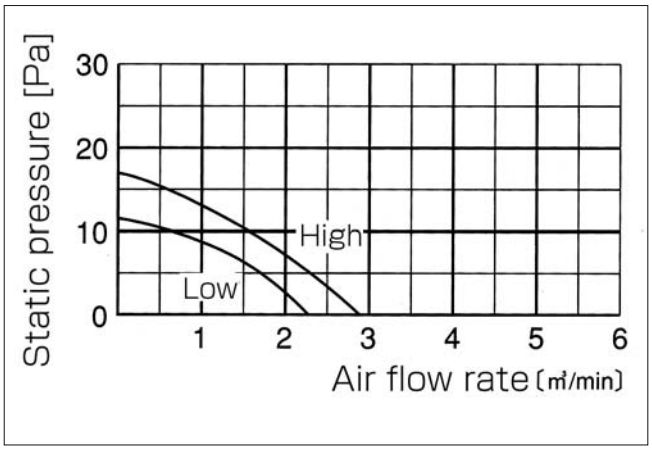

3-way air flow(horizontal vane)Rectangular duct

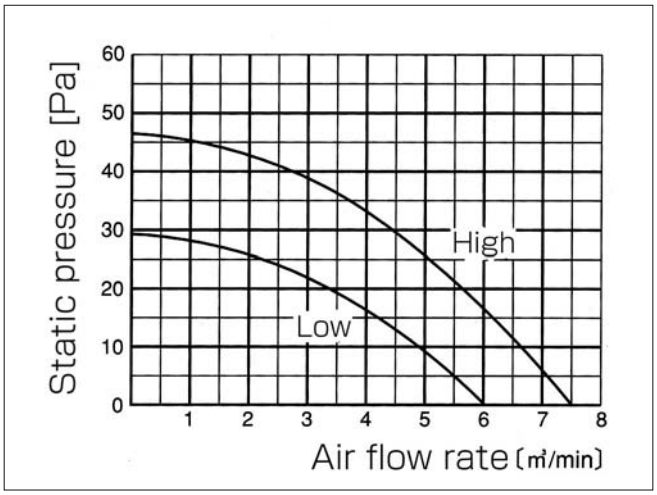

3-way air flow(horizontal vane)Round duct

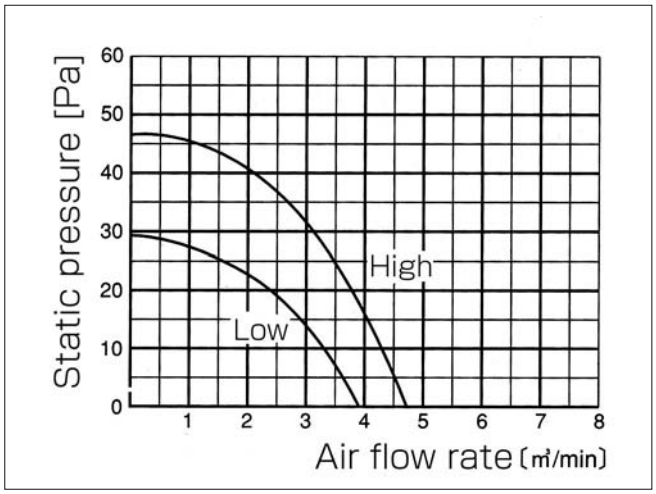

2-way air flow(horizontal vane)Rectangular duct

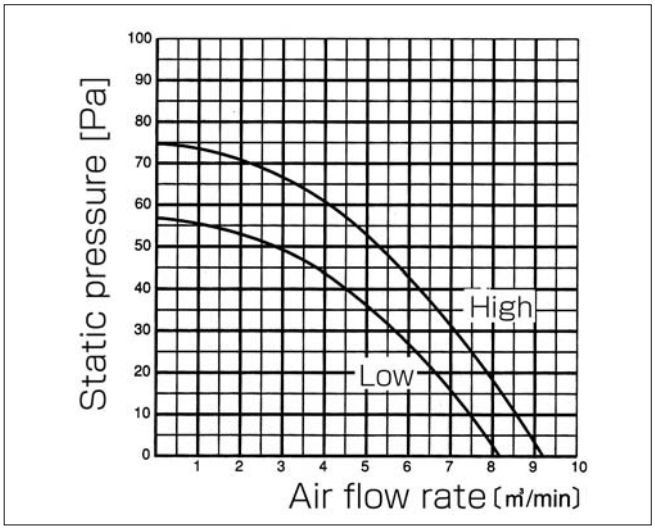

2-way air flow(horizontal vane)Round duct

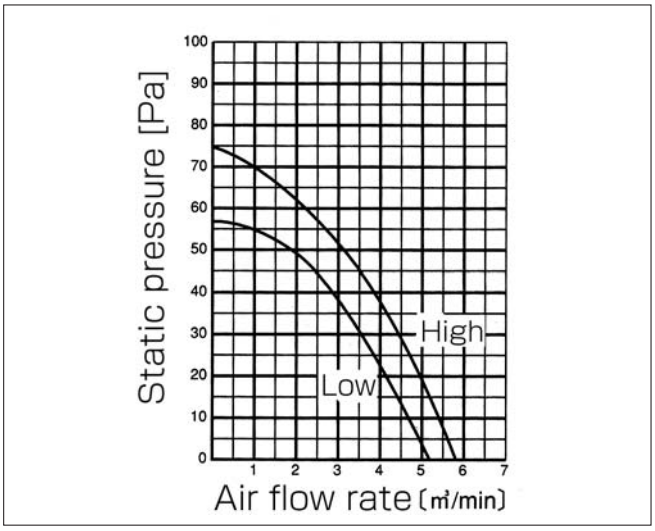

PLA-RP3AA

4-way air flow(horizontal vane)Rectangual duct

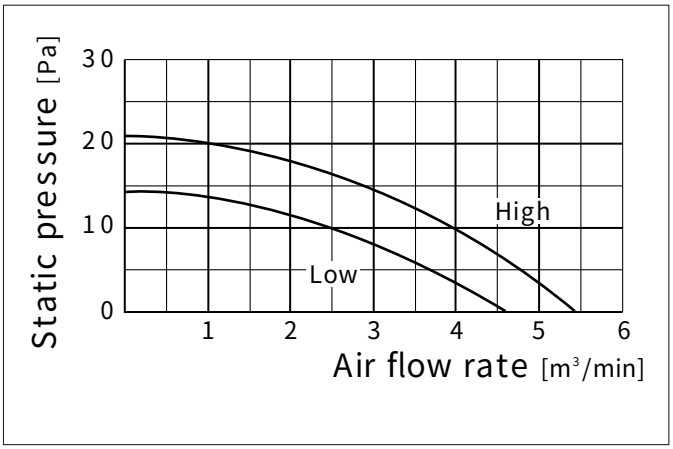

4-way air flow(horizontal vane)Round duct

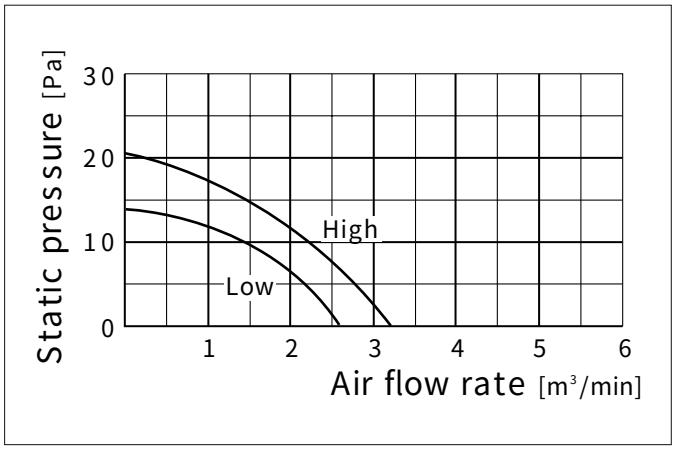

3-way air flow(horizontal vane)Rectangual duct

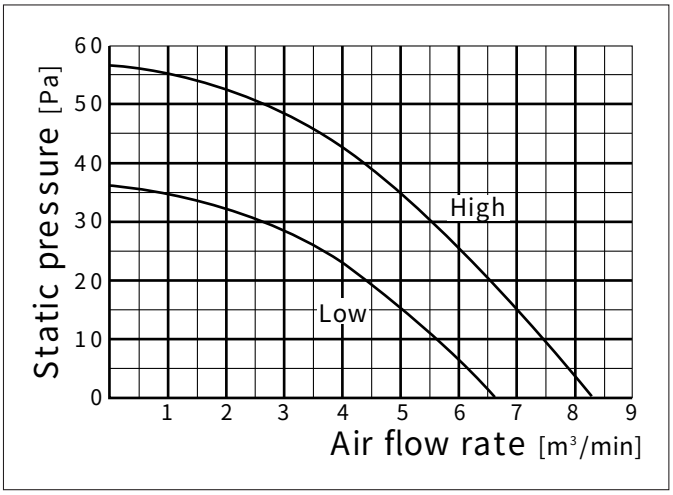

3-way air flow(horizontal vane)Round duct

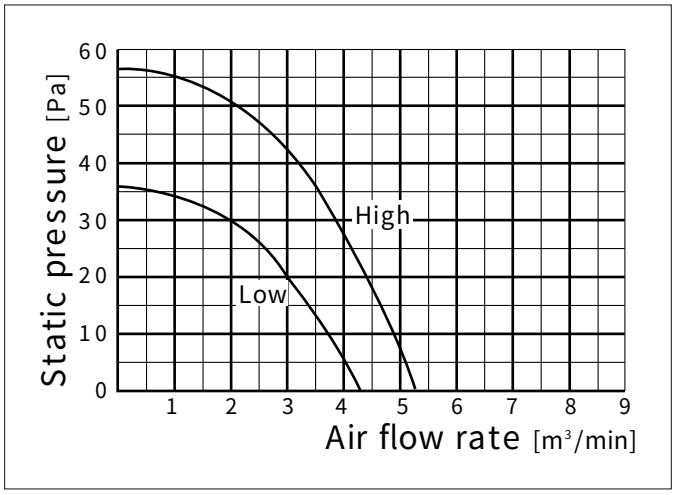

2-way air flow(horizontal vane)Rectangual duct

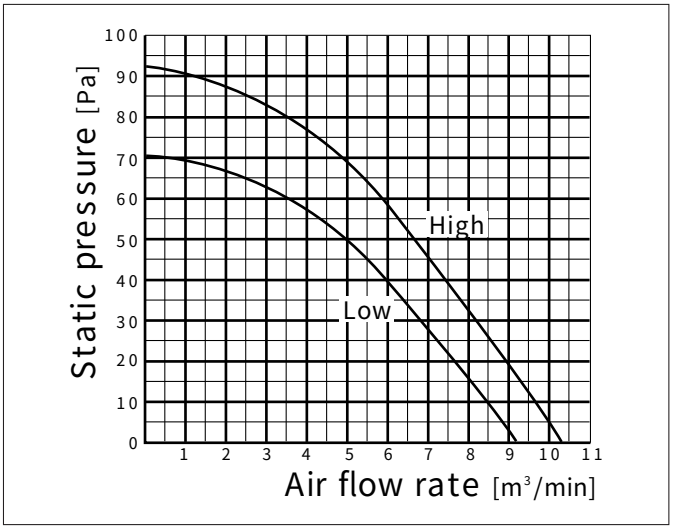

2-way air flow(horizontal vane)Round duct

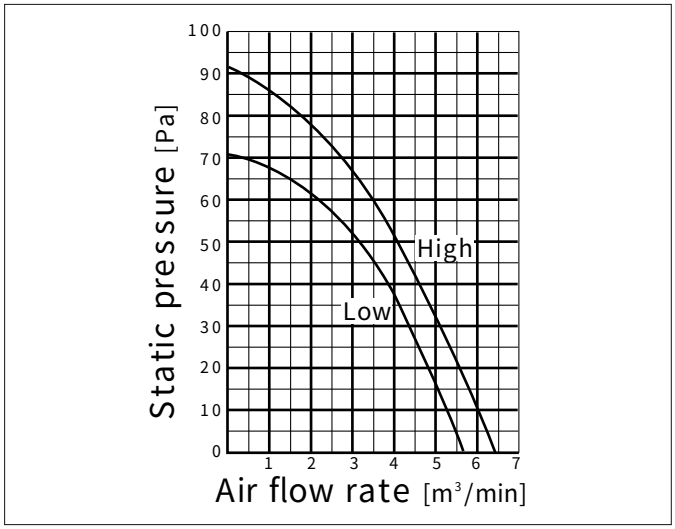

PLA-RP4AA

4-way air flow(horizontal vane)Rectangualar duct

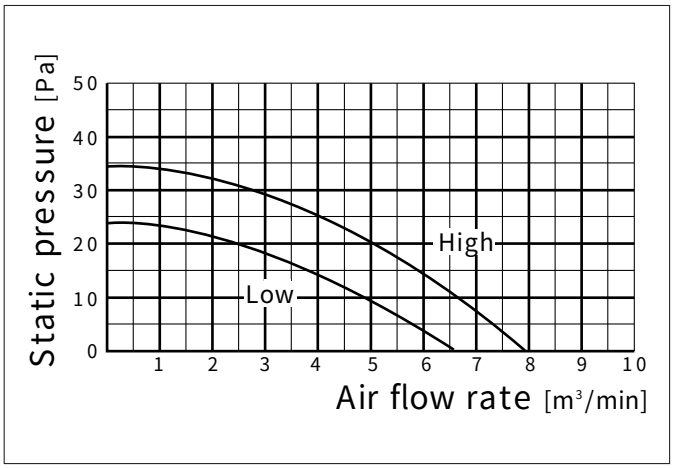

4-way air flow(horizontal vane)Round duct

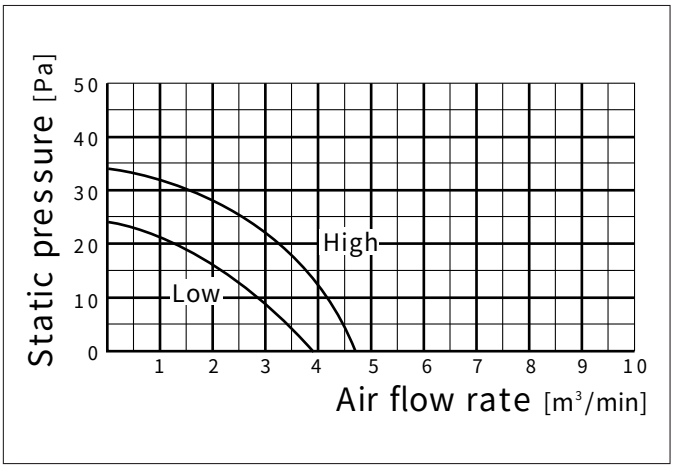

3-way air flow(horizontal vane)Rectangualar duct

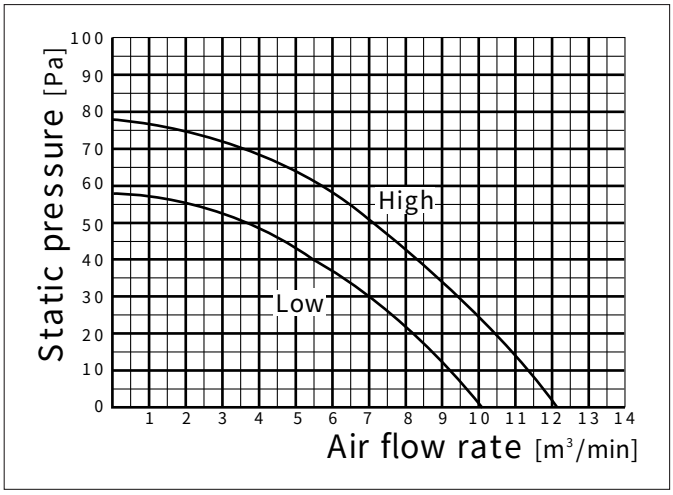

3-way air flow(horizontal vane)Round duct

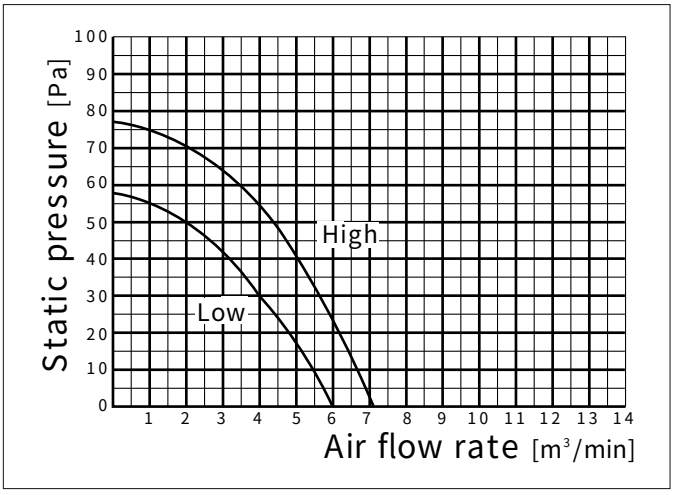

2-way air flow(horizontal vane)Rectangualar duct

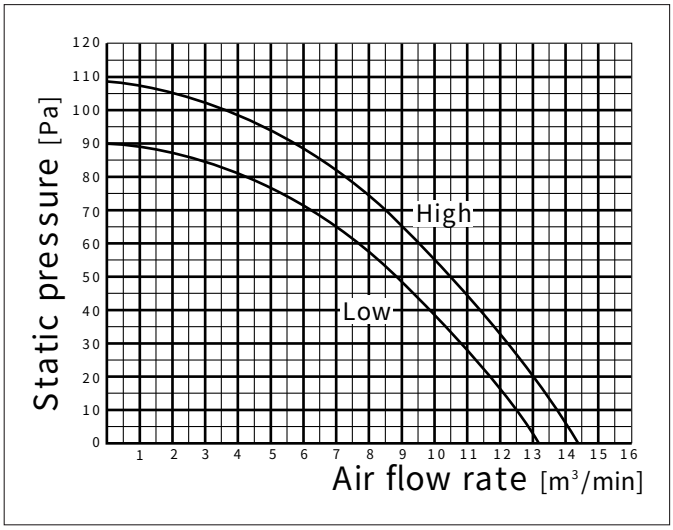

2-way air flow(horizontal vane)Round duct

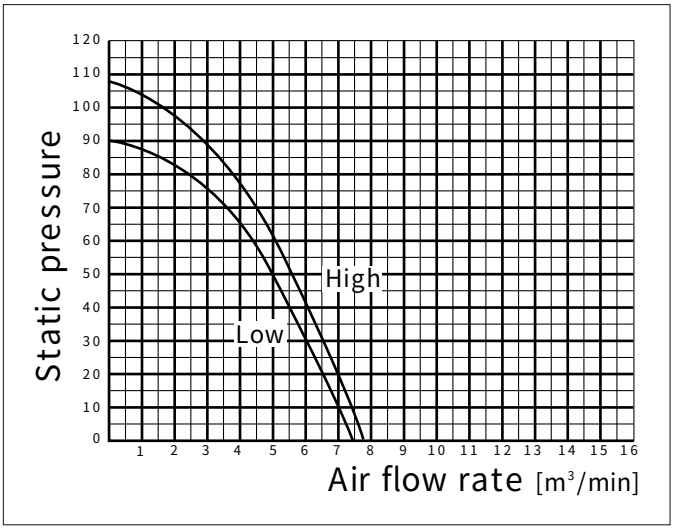

PLA-RP5AA
PLA-RP6AA

4-way air flow(horizontal vane)Rectangular duct

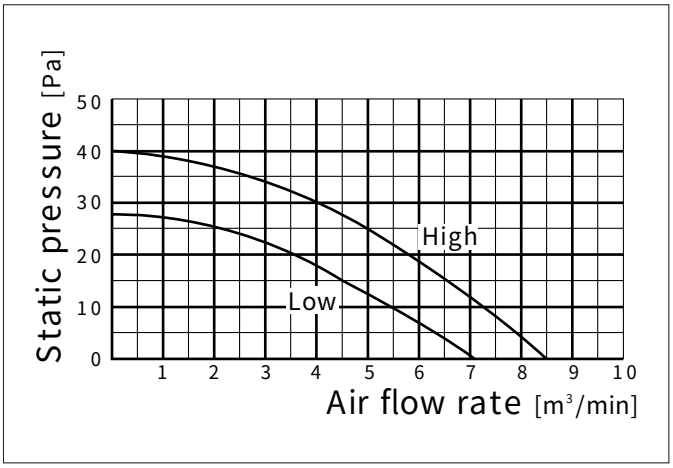

4-way air flow(horizontal vane)Round duct

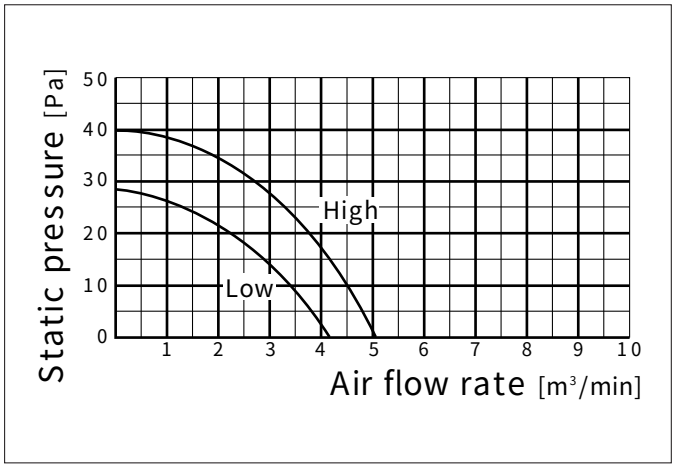

3-way air flow(horizontal vane)Rectangular duct

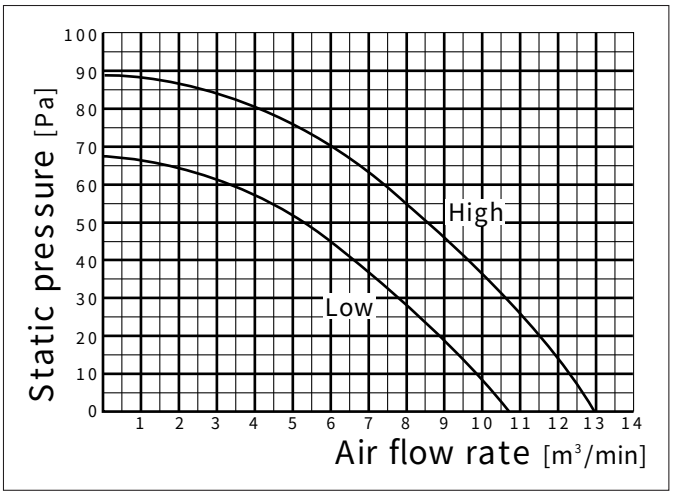

3-way air flow(horizontal vane)Round duct

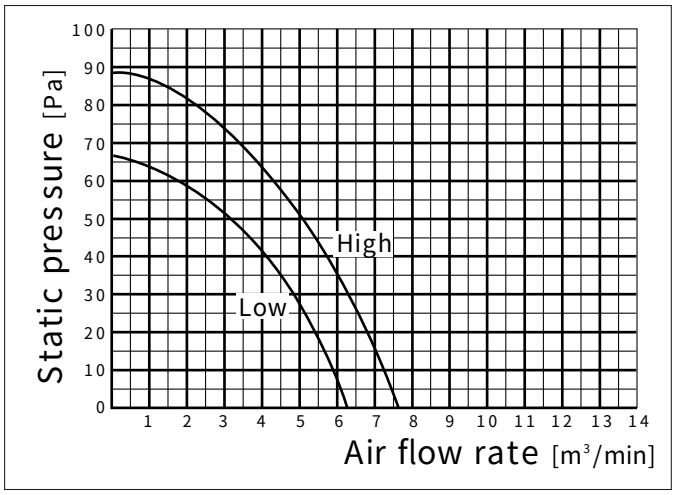

2-way air flow(horizontal vane)Rectangular duct

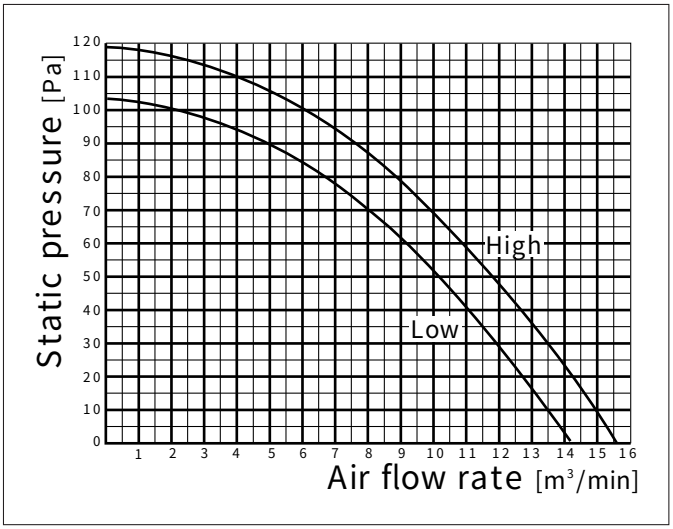

2-way air flow(horizontal vane)Round duct

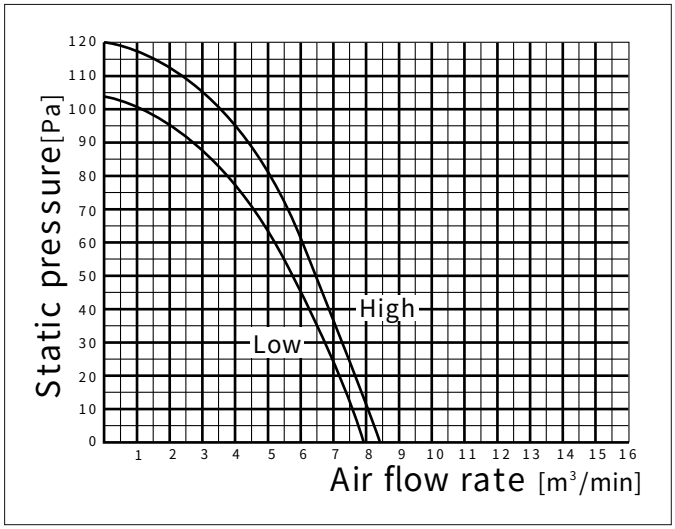

A.1.9 NOISE CRITERIA CURVES

PLA-RP1.6AA

NOTCH	SPL(dB)	LINE
Hi	31	
Mi1	29	
Mi2	28	
Lo	27	

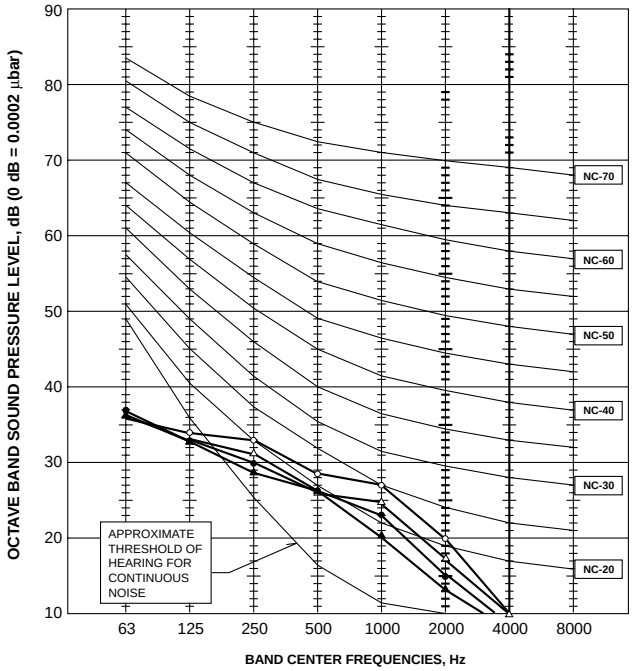

PLA-RP2AA
PLA-RP2.5AA

NOTCH	SPL(dB)	LINE
Hi	33	
Mi1	31	
Mi2	29	
Lo	28	

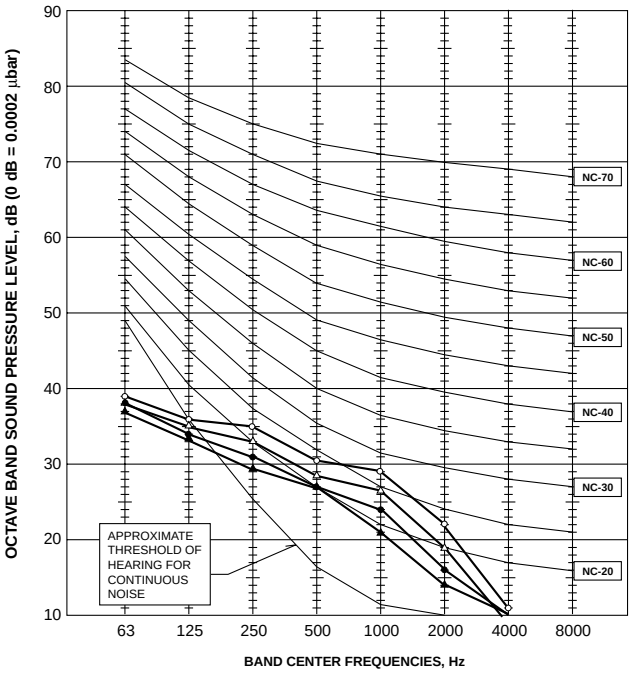

PLA-RP3AA

NOTCH	SPL(dB)	LINE
Hi	34	
Mi1	32	
Mi2	30	
Lo	28	

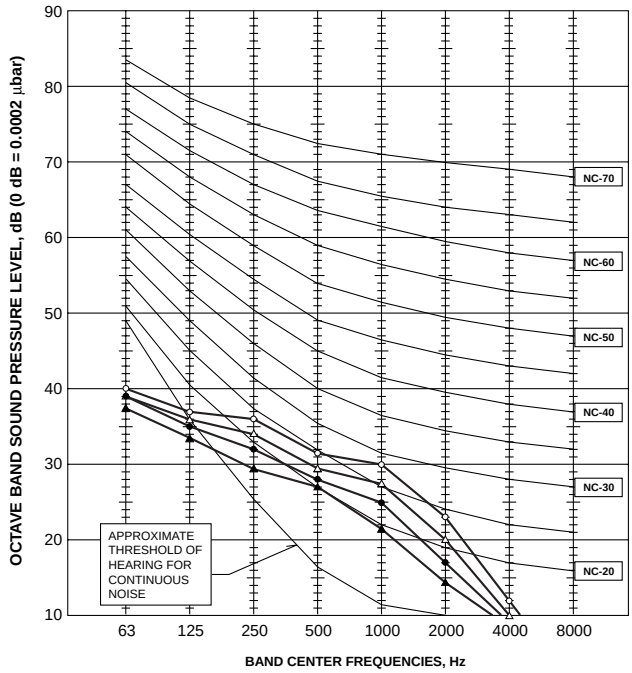

PLA-RP4AA

NOTCH	SPL(dB)	LINE
Hi	41	
Mi1	39	
Mi2	36	
Lo	33	

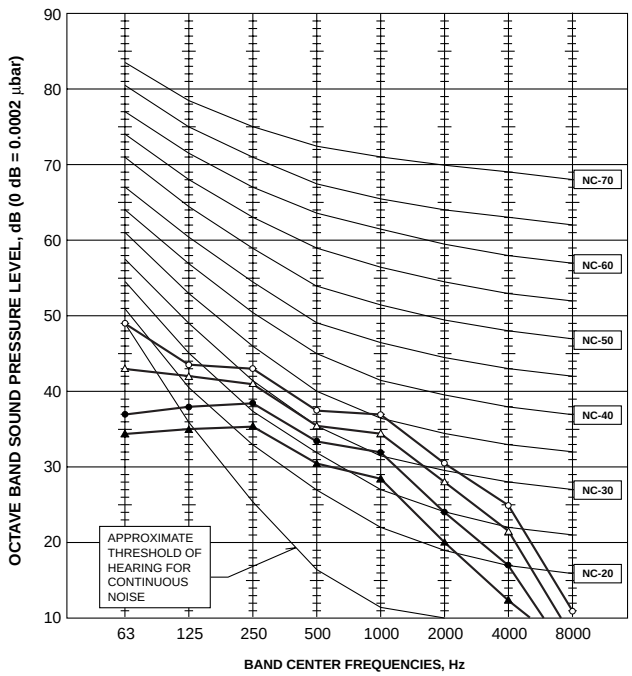

PLA-RP5AA

NOTCH	SPL(dB)	LINE
Hi	45	
Mi1	43	
Mi2	40	
Lo	37	

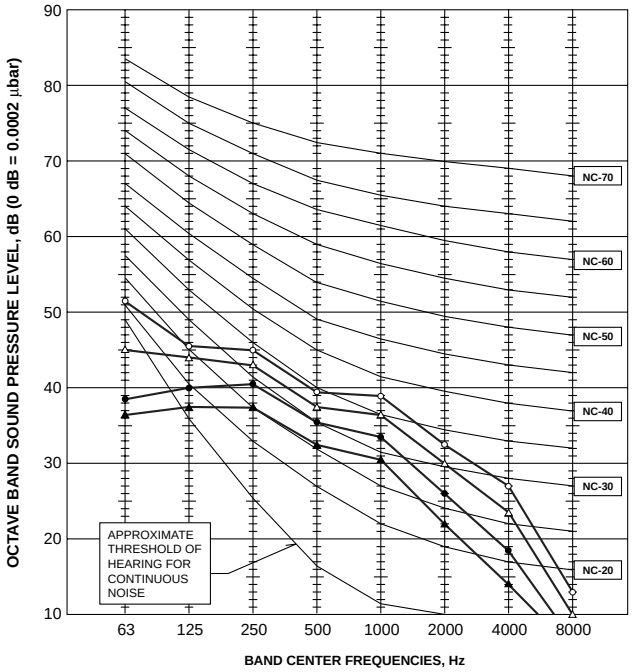

PLA-RP6AA

NOTCH	SPL(dB)	LINE
Hi	45	
Mi1	43	
Mi2	40	
Lo	37	

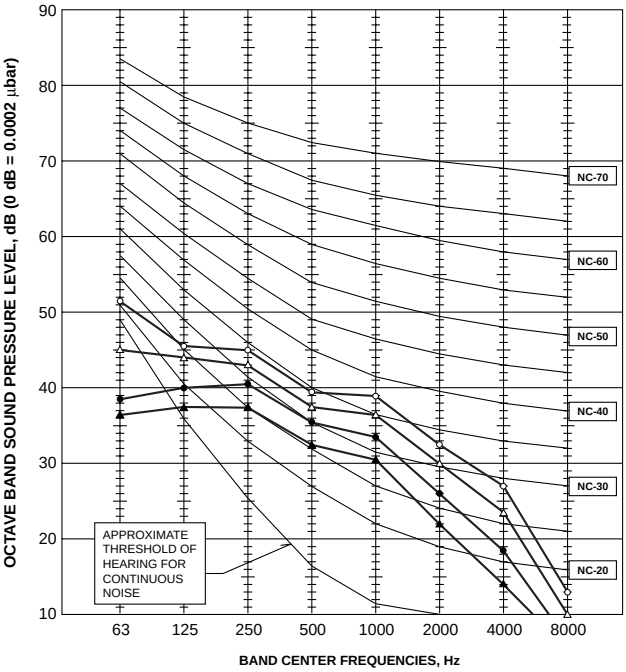

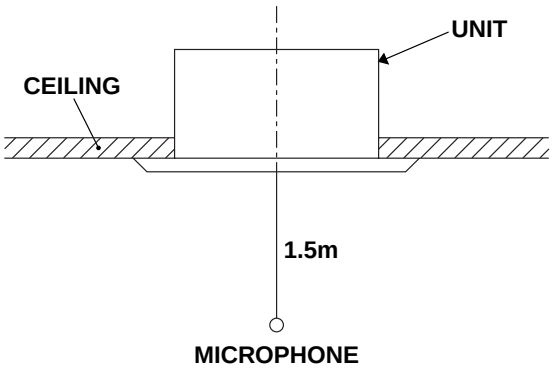

A.1.10 TEMPERATURE AND AIR FLOW DISTRIBUTIONS

PLA-RP3AA

Temperature distribution

<Heating mode> Standard
Flow angle : 70° 4-way flow
Notch : Hi Ceiling height : 2.7 m

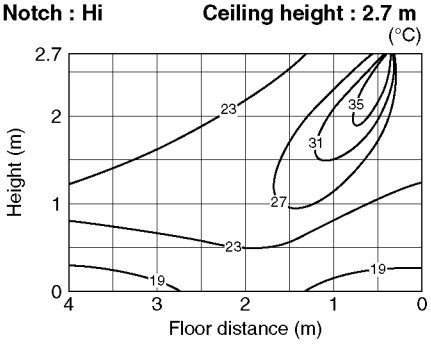

<Heating mode> Standard
Flow angle : 55° 4-way flow
Notch : Hi Ceiling height : 2.7 m

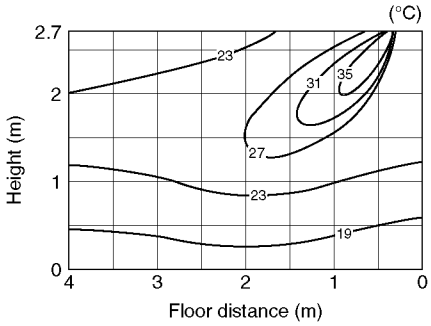

<Heating mode> Standard
Flow angle : 45° 4-way flow
Notch : Hi Ceiling height : 2.7 m

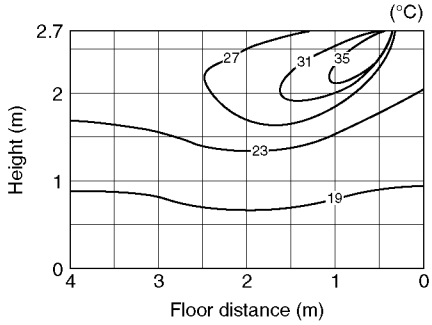

<Heating mode> Standard
Flow angle : 30° 4-way flow
Notch : Hi Ceiling height : 2.7 m

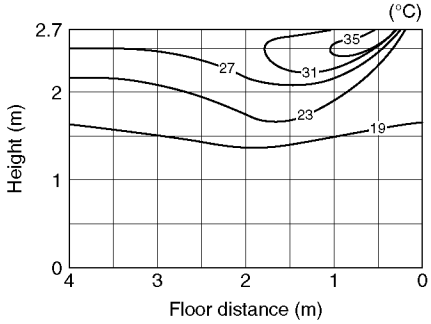

<Heating mode> High ceiling 2
Flow angle : 70° 4-way flow
Notch : Hi Ceiling height : 3.5 m

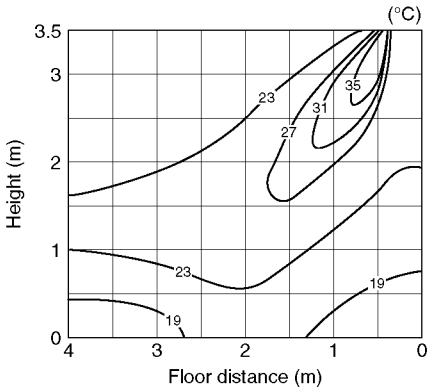

<Heating mode> Standard
Flow angle : 70° 3-way flow
Notch : Hi Ceiling height : 3.0 m

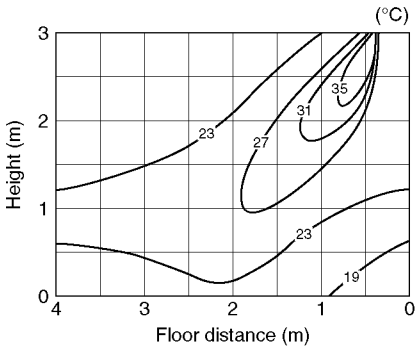

<Heating mode> Standard
Flow angle : 70° 2-way flow
Notch : Hi Ceiling height : 3.3 m

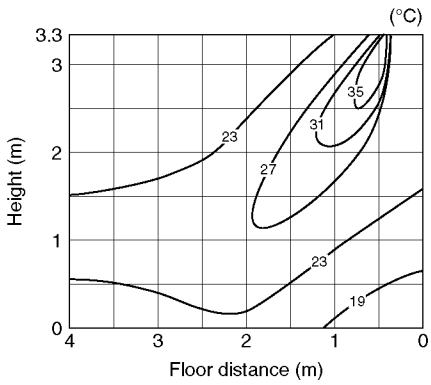

<Cooling mode> Standard
Flow angle : 70° 4-way flow
Notch : Hi Ceiling height : 2.7 m

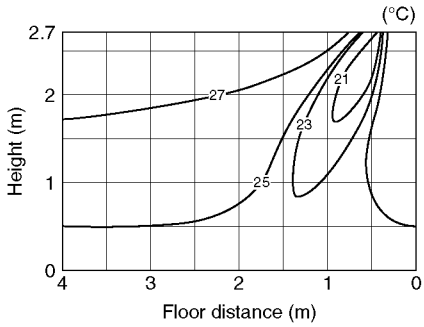

<Cooling mode> Standard
Flow angle : 30° 4-way flow
Notch : Hi Ceiling height : 2.7 m

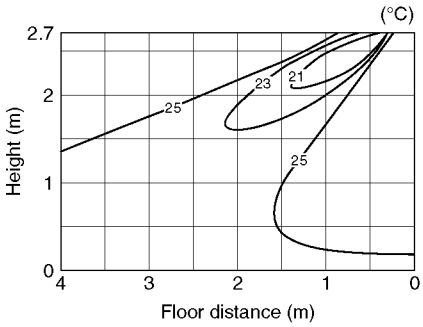

Air flow distribution

<Fan mode> **Standard**
Flow angle : 70° **4-way flow**
Notch : Hi **Ceiling height : 2.7 m**

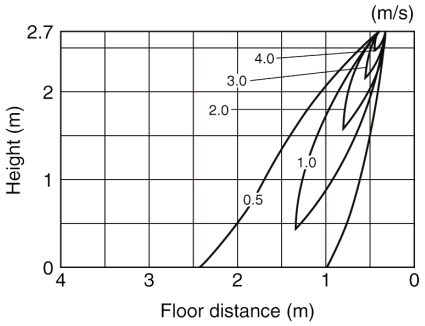

<Fan mode> **Standard**
Flow angle : 30° **4-way flow**
Notch : Hi **Ceiling height : 2.7 m**

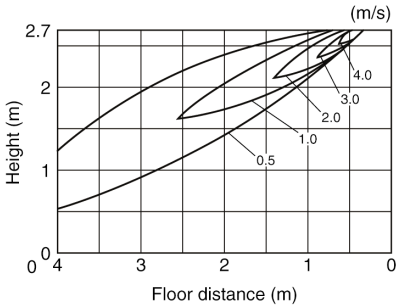

<Fan mode> **High ceiling 2**
Flow angle : 70° **4-way flow**
Notch : Hi **Ceiling height : 3.5 m**

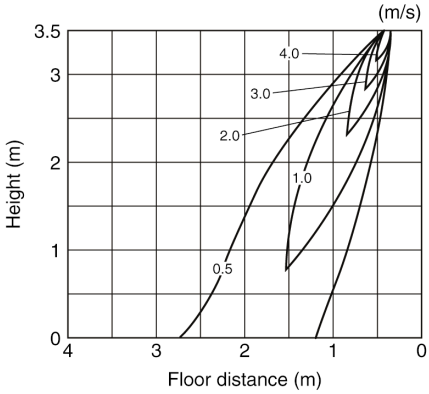

<Fan mode> **Standard**
Flow angle : 70° **3-way flow**
Notch : Hi **Ceiling height : 3.0 m**

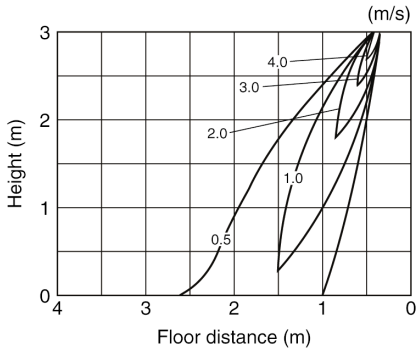

<Fan mode> **Standard**
Flow angle : 70° **2-way flow**
Notch : Hi **Ceiling height : 3.3 m**

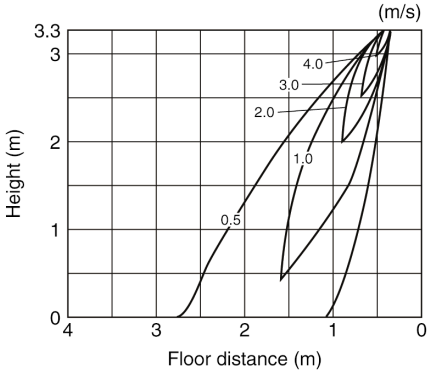

PLA-RP5AA

Temperature distribution

<Heating mode> **Standard**
Flow angle : 70° **4-way flow**
Notch : Hi **Ceiling height : 2.7 m**

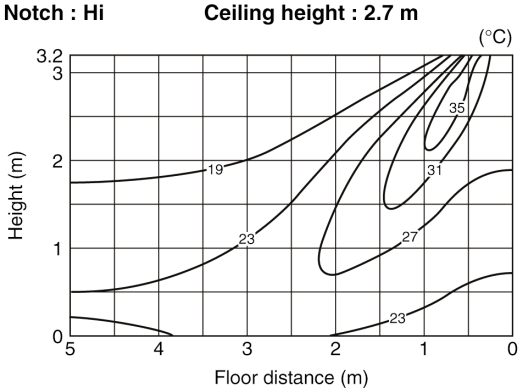

<Heating mode> **Standard**
Flow angle : 70° **4-way flow**
Notch : Hi **Ceiling height : 2.7 m**

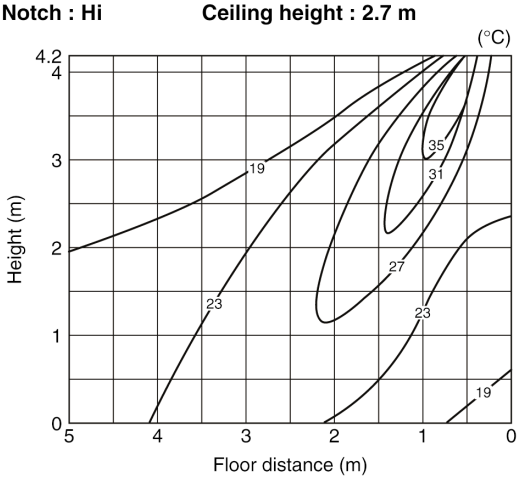

<Fan mode> **Standard**
Flow angle : 70° **4-way flow**
Notch : Hi **Ceiling height : 3.2 m**

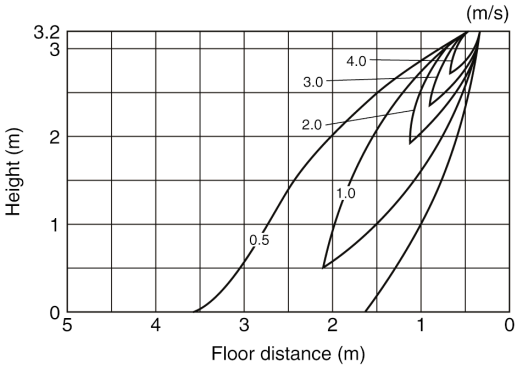

<Fan mode> **High ceiling 2**
Flow angle : 70° **4-way flow**
Notch : Hi **Ceiling height : 4.2 m**

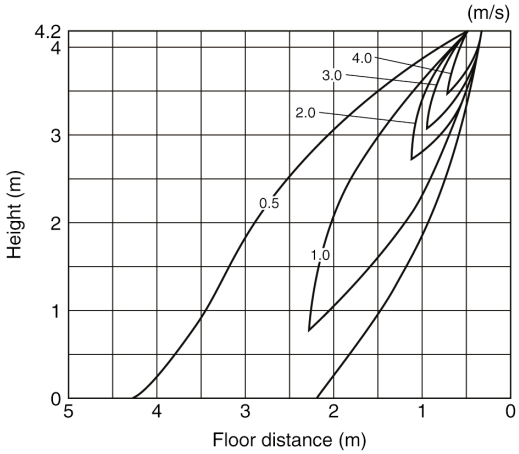

A.1.11 OUTLET AIR SPEED AND COVERAGE RANGE

		PLA-RP1.6AA	PLA-RP2AA	PLA-RP2.5AA	PLA-RP3AA	PLA-RP4AA	PLA-RP5AA	PLA-RP6AA
Air flow	m^3/min.	14	18	18	20	28	30	30
Air speed	m/sec.	2.8	3.6	3.6	4.0	4.9	6.6	6.6
Coverage range	m	4.0	5.2	5.2	5.7	7.4	8.9	8.9

※ The air coverage range is the value up to the position where the air speed is 0.25m/sec.
When air is blown out horizontally from the unit at the Hi notch position.
The coverage range should be used only as a general guideline since it varies according to the size of the room and the furniture inside the room.

A.1.12 REMOTE CONTROLLER

A.1.12.1 Wired remote controller

On the controls are set, the same operation mode can be repeated by simply pressing the ON/OFF button.

● Operation buttons

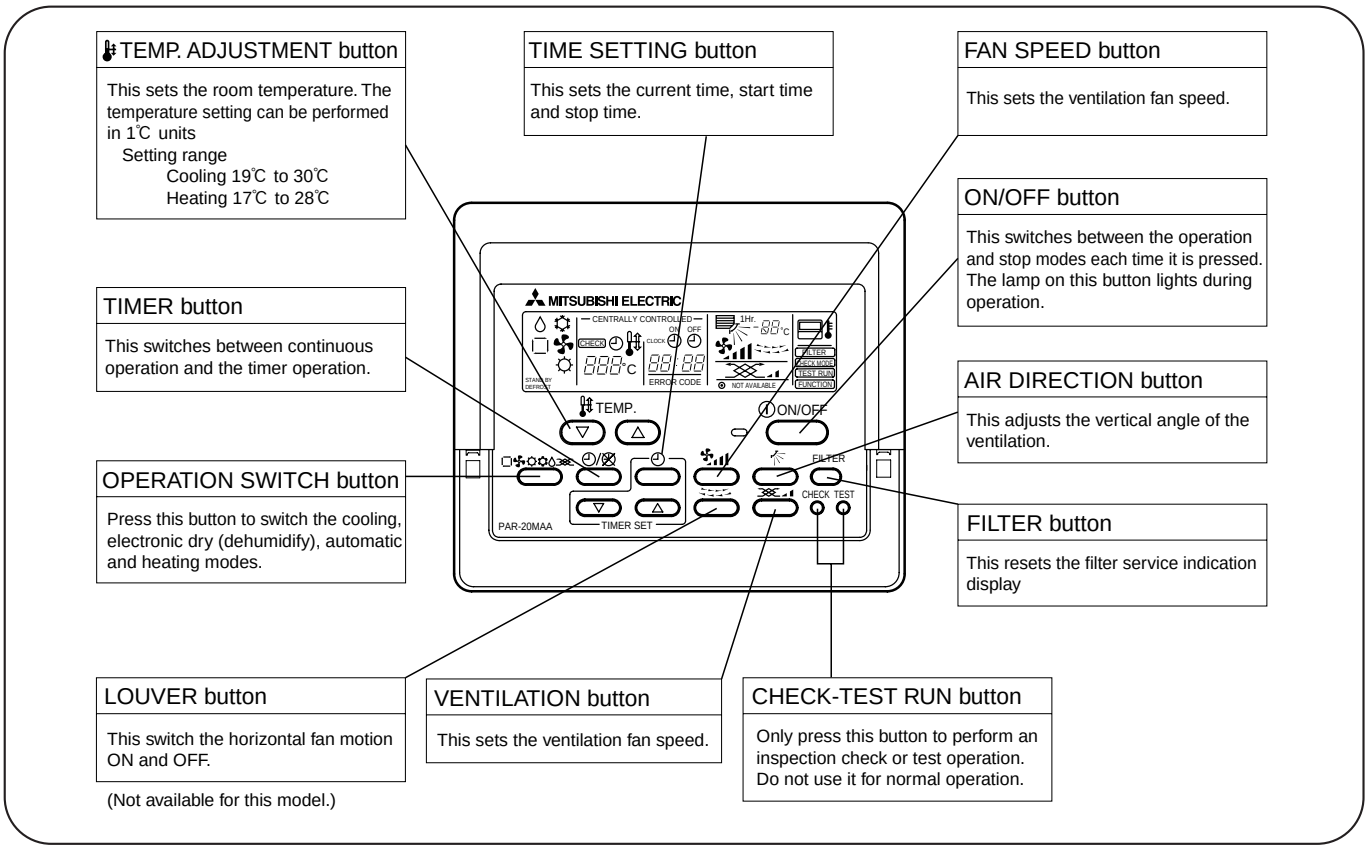

● Display

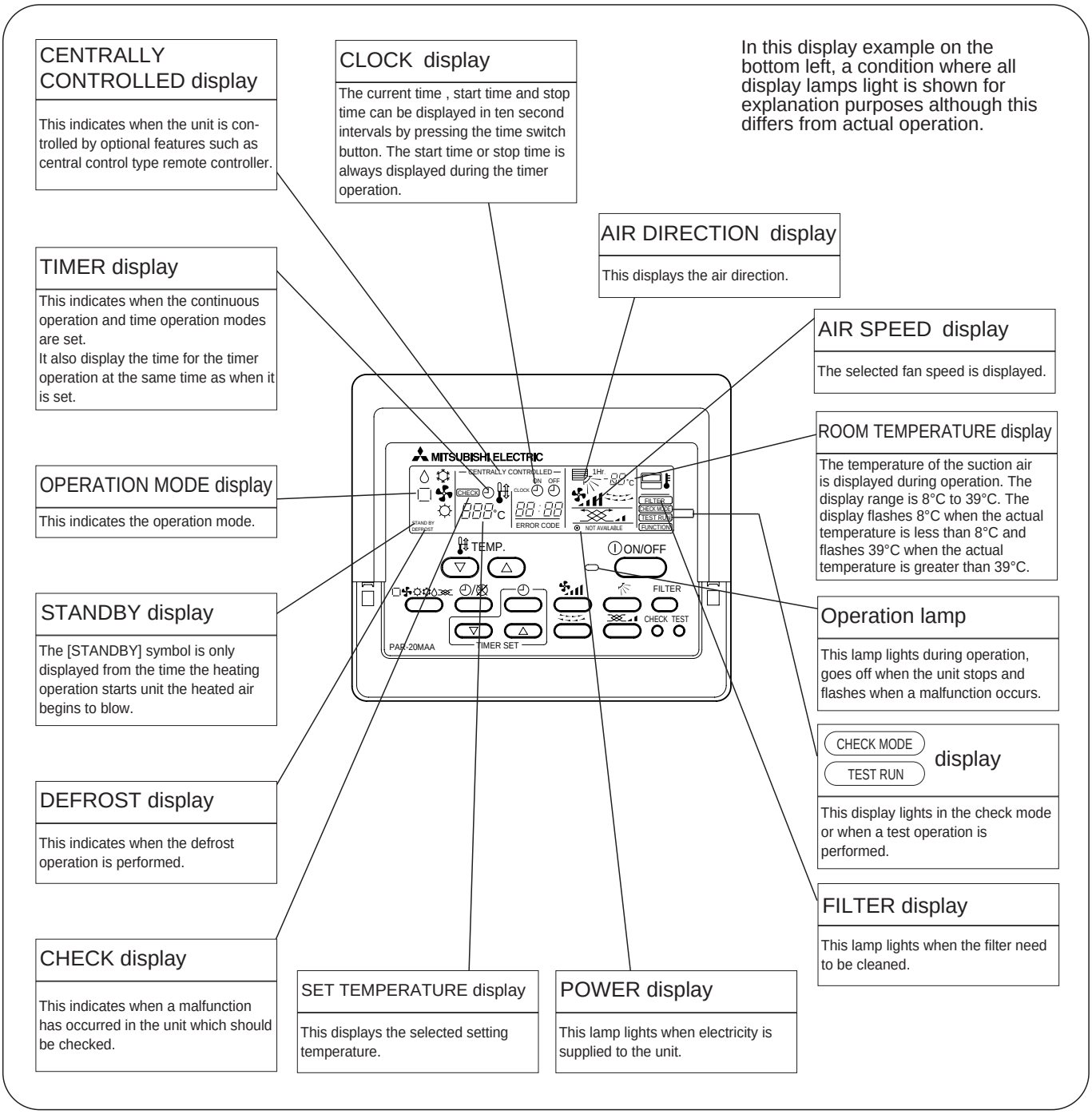

Caution

- Only the Power display lights when the unit is stopped and power supplied to the unit.
- When the central control remote control unit, which is sold separately, is used the ON-OFF button, operation switch button and TEMP. adjustment button do not operate.
- “NOT AVAILABLE” is displayed when the Air speed button are pressed.This indicates that this room unit is not equipped with the fan direction adjustment function and the louver function.
- When power is turned ON for the first time, it is normal that “H0” is displayed on the room temperature indication (For max. 2minutes). Please wait until this “H0” indication disappear then start the operation.

A.1.12.2 Wireless remote controller

When cover is open

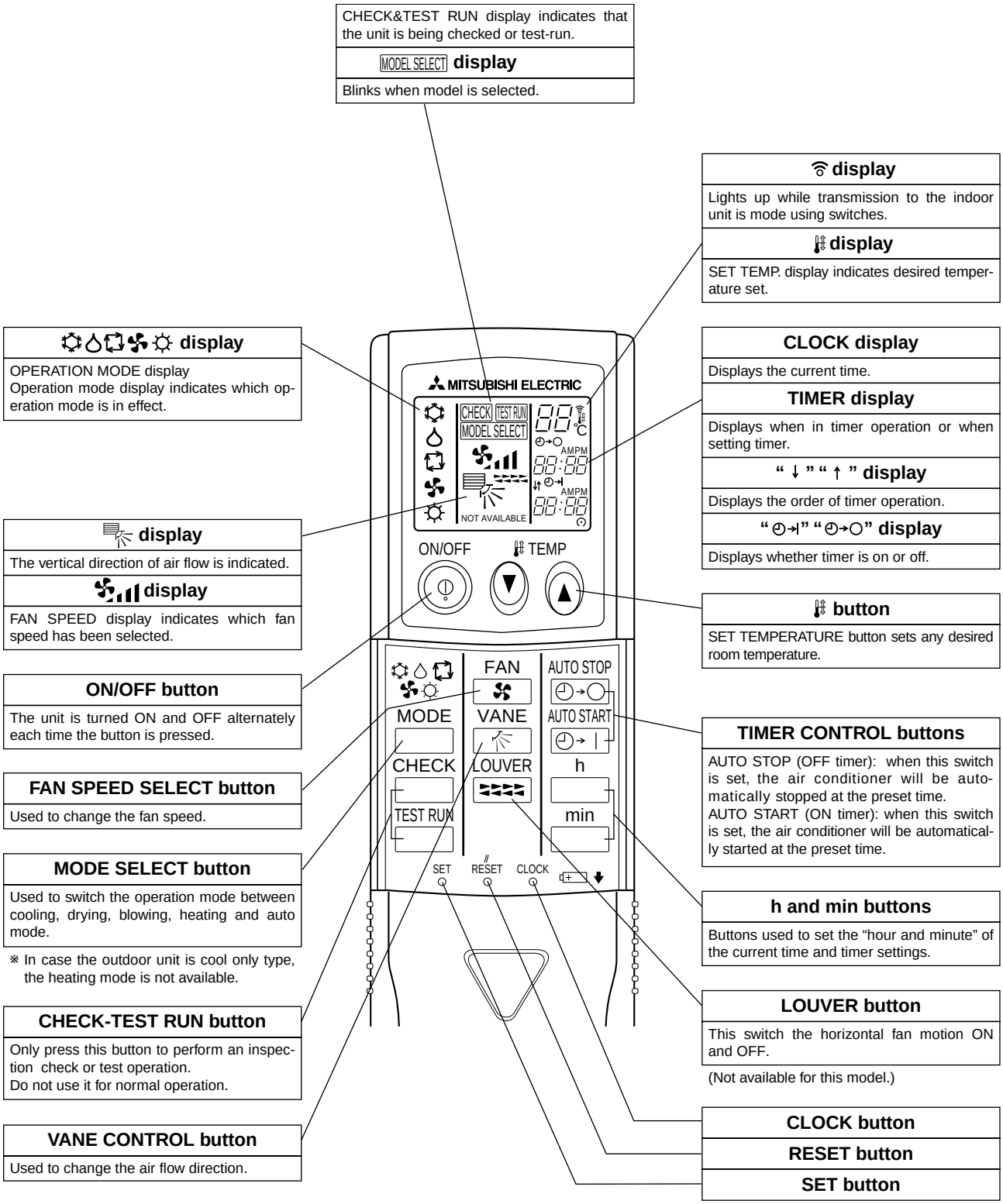

A.1.13 TROUBLESHOOTING

Before you call out a repair man, check the following table to see whether there is a simple solution to your problem.

[for wireless remote controller]

Problem	Solution	Problem	Solution
Unit does not operate at all.	Turn main power on. Then press the POWER ON/OFF button to turn the unit on.	Unit does not start immediately.	Wait until the unit restarts automatically. The compressor may hesitate resuming because a three-minute resume prevention circuit is incorporated in the outdoor unit for protection of the compressor.
	Wait until power is restored, then press the POWER ON/OFF button to turn the unit on.		

[for wired remote controller]

Problem	Solution	Problem	Solution
Unit does not cool or heat very well.	Clean the filter.	CENTRALLY CONTROLLED is displayed in the remote controller.	The start and stop functions of the remote controller are not available when the CENTRALLY CONTROLLED message is lit.
The unit stops operating before arriving at the set temperature in the heating mode.	Frost forms when the outdoor temperature is low and humidity is high. Wait for about 10 minutes for the frost to melt.	The start and stop functions are not available just after restarting the unit.	Wait about three minutes (operation has stopped to prevent damage to the air conditioner).
The airflow direction suddenly changes.	After one hour of cooling-mode operation with the airflow in a downward direction, the unit will automatically change to the "Horizontal airflow" mode.	"H0" is displayed in the remote controller.	An automatic startup test is being performed (will last for about two minutes).
	When the unit is in the heating or defrosting mode, it will automatically change to the "Horizontal airflow mode".	An error code is displayed in the remote controller. The operating display of the wireless remote controller's receiver is flashing.	A self-diagnostic function is being performed to preserve the air conditioner. * Do not attempt to make repairs yourself. Turn the main switch off and contact the dealer from whom you bought the air conditioner. Provide him or her with the name of the unit and the information displayed in the remote controller.
A white mist is expelled from the indoor unit.	This may occur just after the unit is turned on when a high level of humidity is present in the room.		
The indicators of the remote controller do not light up when operated.	Turn on the power switch. " · " will be displayed.		

NOTE: After a power cut, the unit will not restart automatically. You will have to restart it by pressing the POWER - ON/OFF button on the remote controller.

If none of the above apply, turn the main switch off and contact the dealer from whom you bought the air-conditioner, telling him the model name and the nature of the problem. Do not try to fix the unit yourself.

In any of the following cases, turn off the main power switch and contact your local dealer for service:

- The operation lamp (on the main unit) flashes.
- The switches do not work properly.
- The circuit breaker trips frequently (or the fuse blows frequently).
- Water has accidentally been splashed into the unit.
- Water leaks from the unit.
- Something is accidentally dropped into the air-conditioner.
- An unusual noise is heard during operation.

Operating range

		Indoor air intake temperature	Outdoor air intake temperature
Cooling	Maximum	35 °C DB, 22.5 °C WB	46 °C DB
	Minimum	19 °C DB, 15 °C WB	−5 °C DB
Heating	Maximum	28 °C DB	21 °C DB, 15 °C WB
	Minimum	17 °C DB	−11 °C DB, −12 °C WB

The following do not indicate any malfunction:

Odours: smells such as tobacco or cosmetic odours may persist after they have been sucked into the unit.
Sound of liquid flowing inside indoor unit: this can occur during or after operation and is simply the sound of refrigerant being circulated inside the unit.
Ticking sound coming from indoor unit: this can occur when cooling or heating has just begun or has just stopped. It is caused by the indoor unit shrinking or expanding slightly due to the change in temperature.
The message "CENTRALLY CONTROLLED" appearing on the LCD panel: from time to time, this message may come up on the LCD panel. This does not indicate any malfunction.

Remote Controller Settings for Installing/Replacing Batteries and Restarting Operation (for wireless remote controller)

- Always press the reset button after installing or replacing batteries.
- The initial settings are used when installing or replacing batteries after which the settings for restarting are used.

	Initial Settings	Restarting		
Operating mode	Fan	Previous operating mode		
Temperature setting	—	Previous temperature setting		
Fan speed	High	Previous fan speed setting		
Airflow direction	Level	Operating mode	Cooling - Dry	Level
			Heating	Previous setting
			Fan	Level

NOTE: The refrigerant charged in the air conditioner is safe. Refrigerant normally does not leak, however, if refrigerant gas leaks indoors, and comes into contact with the fire of a fan heater, space heater, stove, etc., harmful substances will be generated.
Be sure to ask the service representative whether there is refrigerant leakage or not when repairs are carried out.

A.1.14 INSTALLATION PROCEDURE

1. Safety precautions

- ▶ **Before installing the unit, make sure you read all the "Safety precautions".**
- ▶ **Please report to your supply authority or obtain their consent before connecting this equipment to the power supply system.**

⚠ **Warning:**
Describes precautions that must be observed to prevent danger of injury or death to the user.

⚠ **Caution:**
Describes precautions that must be observed to prevent damage to the unit.

After installation work has been completed, explain the "Safety Precautions," use, and maintenance of the unit to the customer according to the information in the Operation Manual and perform the test run to ensure normal operation. Both the Installation Manual and Operation Manual must be given to the user for keeping. These manuals must be passed on to subsequent users.

⃠ : Indicates an action that must be avoided.
❗ : Indicates that important instructions must be followed.
⏚ : Indicates a part which must be grounded.
: Indicates that caution should be taken with rotating parts.
: Indicates that the main switch must be turned off before servicing.
: Beware of electric shock.
: Beware of hot surface.
ELV: At servicing, please shut down the power supply for both the Indoor and Outdoor Unit.

⚠ **Warning:**
Carefully read the labels affixed to the main unit.

⚠ **Warning:**
- **Ask a dealer or an authorized technician to install the unit.**
- **For installation work, follow the instructions in the Installation Manual and use tools and pipe components specifically made for use with refrigerant specified in the outdoor unit installation manual.**
- **The unit must be installed according to the instructions in order to minimize the risk of damage from earthquakes, typhoons, or strong winds. An incorrectly installed unit may fall down and cause damage or injuries.**
- **The unit must be securely installed on a structure that can sustain its weight.**
- **If the air conditioner is installed in a small room, measures must be taken to prevent the refrigerant concentration in the room from exceeding the safety limit in the event of refrigerant leakage. Should the refrigerant leak and cause the concentration limit to be exceeded, hazards due to lack of oxygen in the room may result.**
- **Ventilate the room if refrigerant leaks during operation. If refrigerant comes into contact with a flame, poisonous gases will be released.**
- **All electric work must be performed by a qualified technician according to local regulations and the instructions given in this manual.**
- **Use only specified cables for wiring.**
- **The terminal block cover panel of the unit must be firmly attached.**
- **Use only accessories authorized by Mitsubishi Electric and ask a dealer or an authorized technician to install them.**
- **The user should never attempt to repair the unit or transfer it to another location.**
- **After installation has been completed, check for refrigerant leaks. If refrigerant leaks into the room and comes into contact with the flame of a heater or portable cooking range, poisonous gases will be released.**

1.1. Before installation (Euvironment)

⚠ **Caution:**
- **Do not use the unit in an unusual environment. If the air conditioner is installed in areas exposed to steam, volatile oil (including machine oil), or sulfuric gas, areas exposed to high salt content such as the seaside, the performance can be significantly reduced and the internal parts can be damaged.**
- **Do not install the unit where combustible gases may leak, be produced, flow, or accumulate. If combustible gas accumulates around the unit, fire or explosion may result.**
- **Do not keep food, plants, caged pets, artwork, or precision instruments in the direct airflow of the indoor unit or too close to the unit, as these items can be damaged by temperature changes or dripping water.**
- **When the room humidity exceeds 80% or when the drainpipe is clogged, water may drip from the indoor unit. Do not install the indoor unit where such dripping can cause damage.**
- **When installing the unit in a hospital or communications office, be prepared for noise and electronic interference. Inverters, home appliances, high-frequency medical equipment, and radio communications equipment can cause the air conditioner to malfunction or breakdown. The air conditioner may also affect medical equipment, disturbing medical care, and communications equipment, harming the screen display quality.**

1.2. Before installation or relocation

⚠ **Caution:**
- **Be extremely careful when transporting the units. Two or more persons are needed to handle the unit, as it weighs 20 kg or more. Do not grasp the packaging bands. Wear protective gloves as you can injure your hands on the fins or other parts.**
- **Be sure to safely dispose of the packaging materials. Packaging materials, such as nails and other metal or wooden parts may cause stabs or other injuries.**
- **Thermal insulation of the refrigerant pipe is necessary to prevent condensation. If the refrigerant pipe is not properly insulated, condensation will be formed.**
- **Place thermal insulation on the pipes to prevent condensation. If the drainpipe is installed incorrectly, water leakage and damage to the ceiling, floor, furniture, or other possessions may result.**
- **Do not clean the air conditioner unit with water. Electric shock may result.**
- **Tighten all flare nuts to specification using a torque wrench. If tightened too much, the flare nut can break after an extended period.**

1.3. Before electric work

⚠ **Caution:**
- **Be sure to install circuit breakers. If not installed, electric shock may result.**
- **For the power lines, use standard cables of sufficient capacity. Otherwise, a short circuit, overheating, or fire may result.**
- **When installing the power lines, do not apply tension to the cables.**
- **Be sure to ground the unit. If the unit is not properly grounded, electric shock may result.**
- **Use circuit breakers (ground fault interrupter, isolating switch (+B fuse), and molded case circuit breaker) with the specified capacity. If the circuit breaker capacity is larger than the specified capacity, breakdown or fire may result.**

1.4. Before starting the test run

⚠ **Caution:**
- **Turn on the main power switch more than 12 hours before starting operation. Starting operation just after turning on the power switch can severely damage the internal parts.**
- **Before starting operation, check that all panels, guards and other protective parts are correctly installed. Rotating, hot, or high voltage parts can cause injuries.**
- **Do not operate the air conditioner without the air filter set in place. If the air filter is not installed, dust may accumulate and breakdown may result.**
- **Do not touch any switch with wet hands. Electric shock may result.**
- **Do not touch the refrigerant pipes with bare hands during operation.**
- **After stopping operation, be sure to wait at least five minutes before turning off the main power switch. Otherwise, water leakage or breakdown may result.**

2. Installation location

Refer to the outdoor unit installation manual.

3. Installing the indoor unit

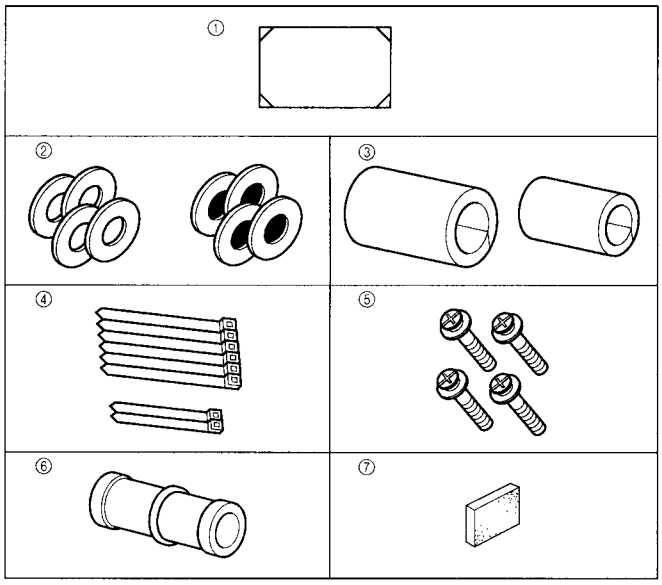

Fig. 3-1

3.1. Check the indoor unit accessories (Fig. 3-1)

The indoor unit should be supplied with the following accessories.

	Accessory name	Q'ty
①	Installation template	1
②	Washers (with insulation) Washers (without insulation)	4 4
③	Pipe cover (for refrigerant piping joint) Small diameter Large diameter	 1 1
④	Band (large) Band (small)	6 2
⑤	Screw with washer (M5 × 25) for mounting grille	4
⑥	Drain socket	1
⑦	Insulation	1

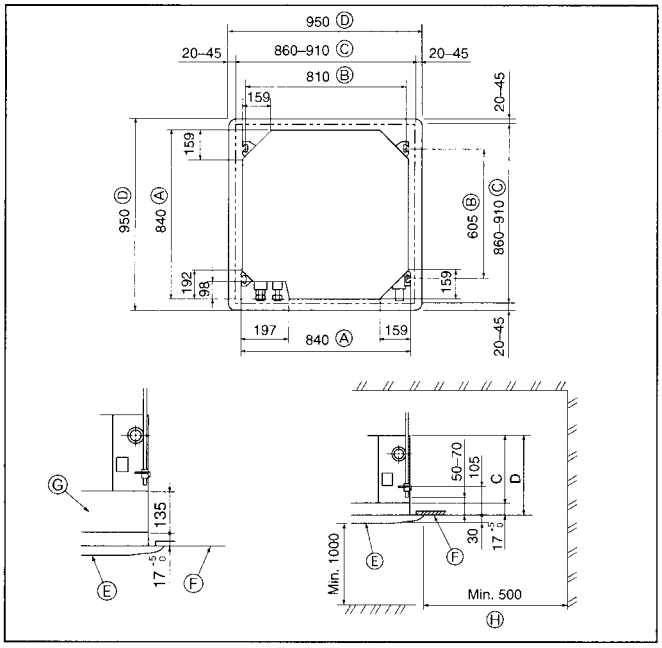

Fig. 3-2

3.2. Ceiling openings and suspension bolt installation locations (Fig. 3-2)

- Using the installation template (top of the package) and the gauge (supplied as an accessory with the grille), make an opening in the ceiling so that the main unit can be installed as shown in the diagram. (The method for using the template and the gauge are shown.)
  - * Before using, check the dimensions of template and gauge, because they change due to fluctuations of temperature and humidity.
  - * The dimensions of ceiling opening can be regulated within the range shown in following diagram; so center the main unit against the opening of ceiling, ensuring that the respective opposite sides on all sides of the clearance between them becomes identical.
- Use M10 (3/8") suspension bolts.
  - * Suspension bolts are to be procured at the field.
- Install securely, ensuring that there is no clearance between the ceiling panel & grille, and between the main unit & grille.

Ⓐ Outer side of main unit
Ⓑ Bolt pitch
Ⓒ Ceiling opening
Ⓓ Outer side of Grille
Ⓔ Grille
Ⓕ Ceiling
Ⓖ Multi function casement (option)
Ⓗ Entire periphery

* Note that the space between ceiling panel of the unit and ceiling slab and etc must be 10 to 15 mm.

(mm)

Models	C	D
RP1.6,2,2.5,3	241	258
RP4,5,6	281	298

3. Installing the indoor unit

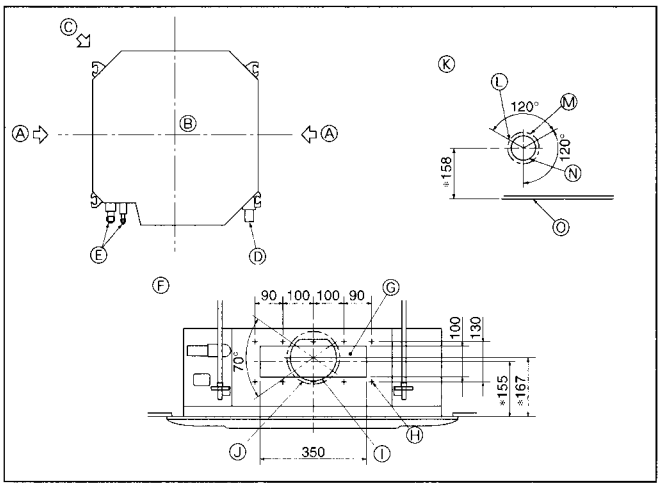

Fig. 3-3

3.3. Branch duct hole and fresh air intake hole (Fig. 3-3)

At the time of installation, use the duct holes (cut out) located at the positions shown in following diagram, as and when required.

- A fresh air intake hole for the optional multi function casement can also be made.

Note:

The figure marked with * in the drawing represent the dimensions of the main unit excluding those of the optional multi function casement.

When installing the optional multi function casement, add 135 mm to the dimensions marked on the figure.

When installing the branch ducts, be sure to insulate adequately. Otherwise condensation and dripping may occur.

Ⓐ Branch duct hole
Ⓑ Indoor unit
Ⓒ Fresh air intake hole
Ⓓ Drain pipe
Ⓔ Refrigerant pipe
Ⓕ Branch duct hole diagram (view from either side)
Ⓖ Cut out hole
Ⓗ 14-ø2.8 burring hole
Ⓘ ø150 cut out hole
Ⓙ ø175 burring hole pitch
Ⓚ Fresh air intake hole diagram
Ⓛ 3-ø2.8 burring hole
Ⓜ ø125 burring hole pitch
Ⓝ ø100 cut out hole
Ⓞ Ceiling

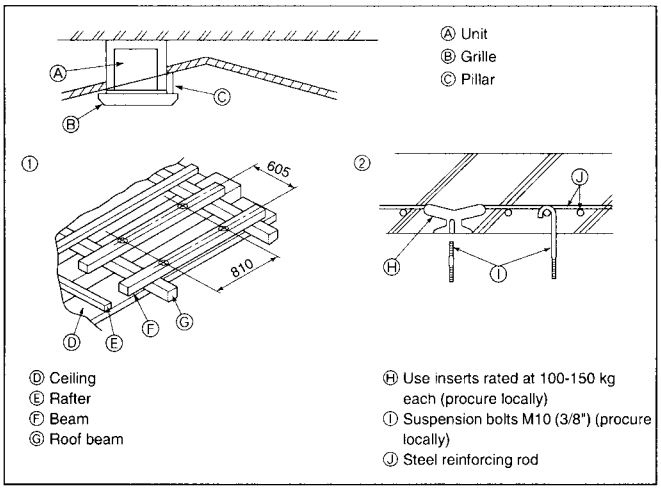

Ⓐ Unit
Ⓑ Grille
Ⓒ Pillar
Ⓓ Ceiling
Ⓔ Rafter
Ⓕ Beam
Ⓖ Roof beam
Ⓗ Use inserts rated at 100-150 kg each (procure locally)
Ⓘ Suspension bolts M10 (3/8") (procure locally)
Ⓙ Steel reinforcing rod

Fig. 3-4

3.4. Suspension structure (Give site of suspension strong structure) (Fig. 3-4)

- The ceiling work differs according to the construction of the building. Building constructors and interior decorators should be consulted for details.

(1) Extent of ceiling removal: The ceiling must be kept completely horizontal and the ceiling foundation (framework: wooden slats and slat holders) must be reinforced in order to protect the ceiling from vibration.
(2) Cut and remove the ceiling foundation.
(3) Reinforce the ends of the ceiling foundation where it has been cut and add ceiling foundation for securing the ends of the ceiling board.
(4) When installing the indoor unit on a slanting ceiling, attach a pillar between the ceiling and the grille and set so that the unit is installed horizontally.

① Wooden structures

- Use tie beams (single storied houses) or second floor beams (two story houses) as reinforcing members.
- Wooden beams for suspending air conditioners must be sturdy and their sides must be at least 6 cm long if the beams are separated by not more than 90 cm and their sides must be at least 9 cm long if the beams are separated by as much as 180 cm. The size of the suspension bolts should be ø10 (3/8"). (The bolts do not come with the unit.)

② Ferro-concrete structures

Secure the suspension bolts using the method shown, or use steel or wooden hangers, etc. to install the suspension bolts.

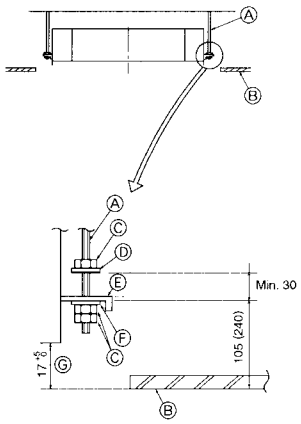

Ⓐ Suspension bolt
Ⓑ Ceiling
Ⓒ Nut
Ⓓ Washer (with insulation)
Ⓔ Mounting plate
Ⓕ Washer (without insulation)
Ⓖ Check using the Installation gauge

Fig. 3-5

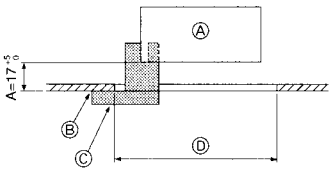

Ⓐ Main unit
Ⓑ Ceiling
Ⓒ Gauge
Ⓓ Ceiling opening dimensions

Fig. 3-6

3.5. Unit suspension procedures (Fig. 3-5)

Suspend the main unit as shown in the diagram.

Figures given in parentheses represent the dimensions in case of installing optional multi function casement.

1. In advance, set the parts onto the suspension bolts in the order of the washers (with insulation), washers (without insulation) and nuts (double).
   - Fit the washer with cushion so that the insulation faces downward.
   - In case of using upper washers to suspend the main unit, the lower washers (with insulation) and nuts (double) are to be set later.
2. Lift the unit to the proper height of the suspension bolts to insert the mounting plate between washers and then fasten it securely.
3. When the main unit can not be aligned against the mounting hole on the ceiling, it is adjustable owing to a slot provided on the mounting plate.
   - Make sure that step A is performed within 17-22 mm. Damage could result by failing to adhere to this range. (Fig. 3-6)

⚠ **Caution:**

Use the top half of the box as a protective cover to prevent dust or debris from getting inside the unit prior to installation of the decorative cover or when applying ceiling materials.

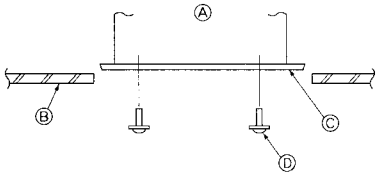

Ⓐ Main unit
Ⓑ Ceiling
Ⓒ Installation template (top of the package)
Ⓓ Screw with washer (Accessory)

Fig. 3-7

3.6. Confirming the position of main unit and tightening the suspension bolts (Fig. 3-7)

- Using the gauge attached to the grille, ensure that the bottom of the main unit is properly aligned with the opening of the ceiling. Be sure to confirm this, otherwise condensation may form and drip due to air leakage etc.
- Confirm that the main unit is horizontally levelled, using a level or a vinyl tube filled with water.
- After checking the position of the main unit, tighten the nuts of the suspension bolts securely to fasten the main unit.
- The installation template (top of the package) can be used as a protective sheet to prevent dust from entering the main unit when the grilles are left unattached for a while or when the ceiling materials are to be lined after installation of the unit is finished.

* As for the details of fitting, refer to the instructions given on the Installation template.

4. Installing the pipes

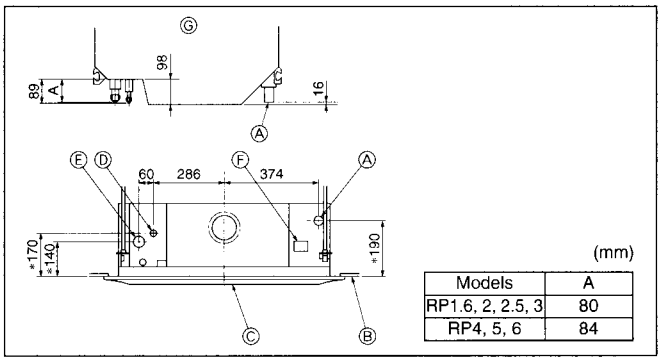

Models	A
RP1.6, 2, 2.5, 3	80
RP4, 5, 6	84

Fig. 4-1

4.1. Refrigerant and drainage piping locations of indoor unit

The figure marked with * in the drawing represent the dimensions of the main unit excluding those of the optional multi function casement. (Fig. 4-1)

Ⓐ Drain pipe
Ⓑ Ceiling
Ⓒ Grille
Ⓓ Refrigerant pipe (liquid)
Ⓔ Refrigerant pipe (gas)
Ⓕ Water supply inlet
Ⓖ Main unit

- When the optional multi-functional casement is installed, add 135 mm to the dimensions marked on the figure.

5. Refrigerant piping work

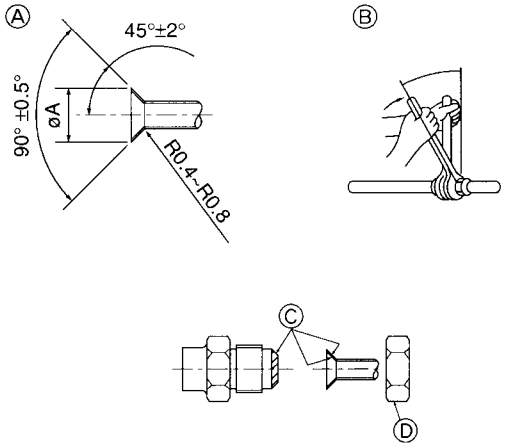

Fig. 5-1

Ⓐ Flare cutting dimensions

Copper pipe O.D. (mm)	Flare dimensions øA dimensions (mm)
ø6.35	8.7 - 9.1
ø9.52	12.8 - 13.2
ø12.7	16.2 - 16.6
ø15.88	19.3 - 19.7
ø19.05	23.6 - 24.0

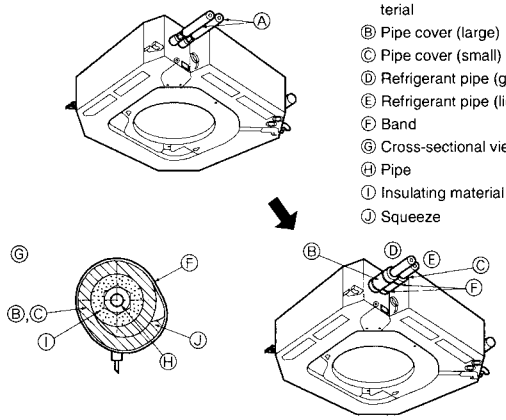

Ⓐ Refrigerant pipe and insulating material
Ⓑ Pipe cover (large)
Ⓒ Pipe cover (small)
Ⓓ Refrigerant pipe (gas)
Ⓔ Refrigerant pipe (liquid)
Ⓕ Band
Ⓖ Cross-sectional view of connection
Ⓗ Pipe
Ⓘ Insulating material
Ⓙ Squeeze

Fig. 5-2

5.1. Connecting pipes (Fig. 5-1)

- When commercially available copper pipes are used, wrap liquid and gas pipes with commercially available insulation materials (heat-resistant to 100 °C or more, thickness of 12 mm or more).
- The indoor parts of the drain pipe should be wrapped with polyethylene foam insulation materials (specific gravity of 0.03, thickness of 9 mm or more).
- Apply thin layer of refrigerant oil to pipe and joint seating surface before tightening flare nut.
- Use two wrenches to tighten piping connections.
- Use refrigerant piping insulation provided to insulate indoor unit connections. Insulate carefully.

Ⓑ Flare nut tightening torque

Copper pipe O.D. (mm)	Flare nut O.D. (mm)	Tightening torque (N·m)
ø6.35	17	14 - 18
ø6.35	22	34 - 42
ø9.52	22	34 - 42
ø12.7	26	49 - 61
ø12.7	29	68 - 82
ø15.88	29	68 - 82
ø15.88	36	100 - 120
ø19.05	36	100 - 120

Ⓒ Apply refrigerating machine oil over the entire flare seat surface.

Ⓓ Use the flare nuts as follows.

Indoor unit		RP1.6, 2	RP2.5, 3	RP4-6
Refrigerant		R407C		
Joint outdoor unit		PU(H)-P1.6/2	PU(H)-P2.5/3	PU(H)-P4/5/6
Gas side	Pipe size (mm)	ø15.88	ø15.88	ø19.05
	Indoor nut	*1	*1	*1
	Outdoor nut	*1	*1	*1
Liquid side	Pipe size (mm)	ø9.52	ø9.52	ø9.52
	Indoor nut	*1	*1	*1
	Outdoor nut	*1	*1	*1

Indoor unit		RP1.6, 2	RP2.5, 3	RP4-6
Refrigerant		R410A		
Joint outdoor unit		PUHZ-RP1.6/2	PUHZ-RP2.5/3	PUHZ-RP4/5/6
Gas side	Pipe size (mm)	ø12.7	ø15.88	ø15.88
	Indoor nut	*2	*1	*2
	Outdoor nut	*1	*1	*1
Liquid side	Pipe size (mm)	ø6.35	ø9.52	ø9.52
	Indoor nut	*2	*1	*1
	Outdoor nut	*1	*1	*1

*1: The flare nut is attached to its pipe.
*2: The flare nut is in the outdoor unit accessory.
Do not use the flare nut attached. If it is used, a gas leakage or even a pipe extraction may occur.

Refer to the outdoor unit installation manual for the specification of connecting pipes.

5.2. Indoor unit (Fig. 5-2)

Heat insulation for refrigerant pipes:

① Wrap the enclosed large-sized pipe cover around the gas pipe, making sure that the end of the pipe cover touches the side of the unit.
② Wrap the enclosed small-sized pipe cover around the liquid pipe, making sure that the end of the pipe cover touches the side of the unit.
③ Secure both ends of each pipe cover with the enclosed bands. (Attach the bands 20 mm from the ends of the pipe cover.)

- After connecting the refrigerant piping to the indoor unit, be sure to test the pipe connections for gas leakage with nitrogen gas. (Check that there is no refrigerant leakage from the refrigerant piping to the indoor unit.)

5.3. For twin/triple combination

Refer to the outdoor unit installation manual.

6. Drainage piping work

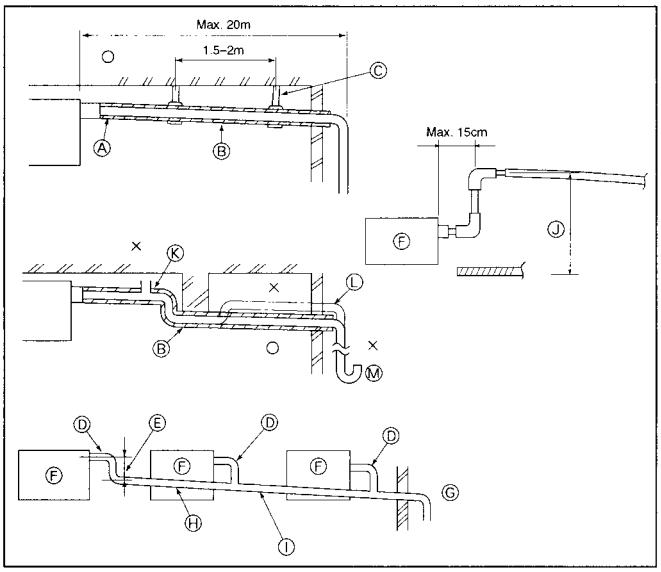

Fig. 6-1

6.1. Drainage piping work (Fig. 6-1)

- Use VP25 (O. D. ø32 PVC TUBE) for drain piping and provide 1/100 or more downward slope.
- Be sure to connect the piping joints using a polyvinyl type adhesive.
- Observe the figure for piping work.
- Use the included drain hose to change the extraction direction.

① Correct piping
② Wrong piping
Ⓐ Insulation (9 mm or more)
Ⓑ Downward slope (1/100 or more)
Ⓒ Support metal
Ⓚ Air bleeder
Ⓛ Raised
Ⓜ Odor trap

Grouped piping

Ⓓ O. D. ø32 PVC TUBE
Ⓔ Make it as large as possible
Ⓕ Indoor unit
Ⓖ Make the piping size large for grouped piping.
Ⓗ Downward slope (1/100 or more)
Ⓘ O. D. ø38 PVC TUBE for grouped piping. (9 mm or more insulation)
Ⓙ Up to 85 cm

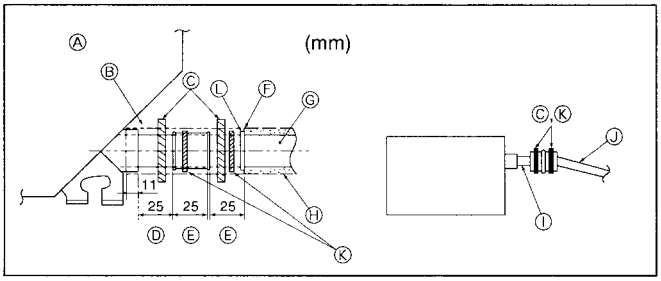

Fig. 6-2

1. Connect the drain socket (supplied with the unit) to the drain port. (Fig. 6-2) (Affix the tube using PVC adhesive then secure it with a band.)
2. Install a locally purchased drain pipe (PVC pipe, O.D. ø32). (Affix the pipe using PVC adhesive then secure it with a band.)
3. Insulate the tube and pipe. (PVC pipe, O.D. ø32 and socket)
4. Check that drain flows smoothly.
5. Insulate the drain port with insulating material, then secure the material with a band. (Both insulating material and band are supplied with the unit.)

Ⓐ Unit
Ⓑ Insulating material
Ⓒ Band (large)
Ⓓ Drain port (transparent)
Ⓔ Insertion margin
Ⓕ Matching
Ⓖ Drain pipe (O.D. ø32 PVC TUBE)
Ⓗ Insulating material (purchased locally)
Ⓘ Transparent PVC pipe
Ⓙ O.D. ø32 PVC TUBE (Slope 1/100 or more)
Ⓚ Band (small)
Ⓛ Drain socket

7. Electrical work

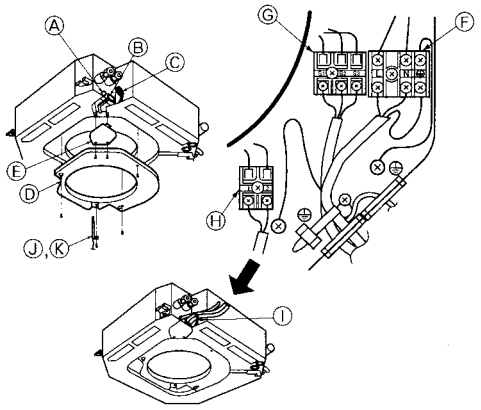

Fig. 7-1

7.1. Indoor unit (Fig. 7-1)

1. Remove the two electrical wiring service panels.
2. Wire the power cable and control cable separately through the respective wiring entries given in the diagram.

- Do not allow slackening of the terminal screws.
- Leave excess cable so that the electrical box can be suspended below the unit during servicing. (Approx. 50 to 100 mm)

Ⓐ Entry for control cable
Ⓑ Entry for power
Ⓒ Clamp
Ⓓ Service panel for indoor controller switch setting
Ⓔ Service panel for electrical wiring
Ⓕ Electric heater power supply terminals (PLH models)
Ⓖ Indoor / Outdoor unit connecting terminals
Ⓗ Remote controller connector
Ⓘ Secure with the clamp
Ⓙ Intake sensor
Ⓚ Holder

Indoor unit model			PLA	PLH
Indoor unit power supply (Heater)			–	~/N (single), 50Hz, 220-230-240V
Indoor unit input capacity (Heater) Main switch (Breaker)		*1	–	16 A
Wiring Wire No. × size (mm²)	Indoor unit power supply (Heater)		–	2 × Min. 1.5
	Indoor unit power supply (Heater) earth		–	1 × Min. 1.5
	Indoor unit-Outdoor unit		3 × 2.5 (polar)	3 × 2.5 (polar)
	Indoor unit-Outdoor unit earth		1 × Min. 2.5	1 × Min. 2.5
	Remote controller-Indoor unit	*2	2 × 0.69 (Non-polar)	2 × 0.69 (Non-polar)
Circuit rating	Indoor unit (Heater) L-N	*3	–	AC 220-230-240V
	Indoor unit-Outdoor unit S1-S2	*3	AC 220-230-240V	AC 220-230-240V
	Indoor unit-Outdoor unit S2-S3	*3	DC24V	DC24V
	Remote controller-Indoor unit	*3	DC14V	DC14V

*1. A breaker with at least 3 mm contact separation in each pole shall be provided. Use non-fuse breaker (NF) or earth leakage breaker (NV).
*2. A 10 m wire is attached in the remote controller accessory.
*3. The figures are NOT always against the ground.
S3 terminal has DC 24 V against S2 terminal. However between S3 and S1, these terminals are not electrically insulataed by the transformer or other device.

Notes: 1. Wiring size must comply with the applicable local and national code.
2. Power supply cords and Indoor unit/Outdoor unit connecting cords shall not be lighter than polychloroprene sheathed flexible cord. (Design 245 IEC 57)
3. Install an earth longer and thicker than other cables.

7. Electrical work

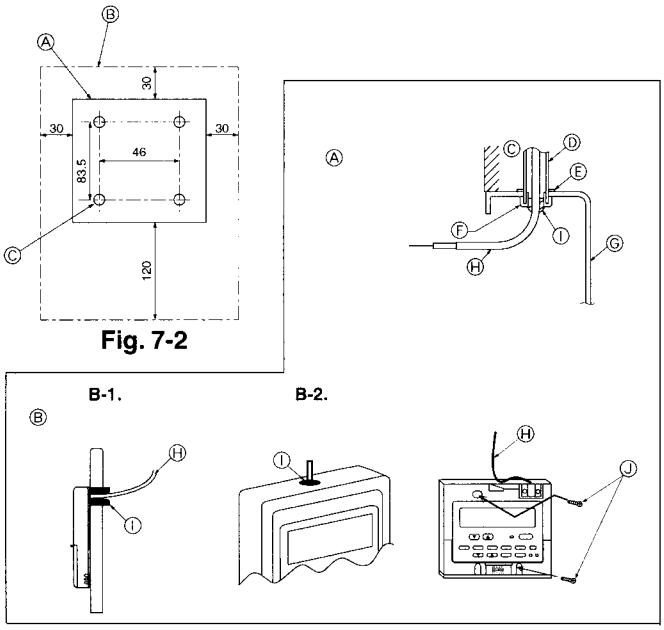

Fig. 7-2

Fig. 7-3

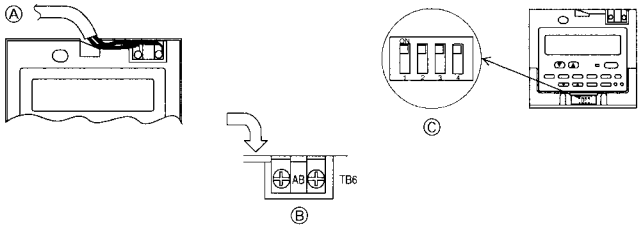

Fig. 7-4

<SW No. 1>

SW contents Main	Remote controller Main/Sub setting
ON/OFF	Main/Sub
Comment	Set one of the two remote controllers at one group to "Main"

<SW No. 2>

SW contents Main	When remote controller power turned on
ON/OFF	Normally on/Timer mode on
Comment	When you want to return to the timer mode when the power is restored after a power failure when a Program timer is connected, select "Timer mode".

<SW No. 3>

SW contents Main	Cooling/heating display in AUTO mode
ON/OFF	Yes/No
Comment	When you do not want to display "Cooling" and "Heating" in the Auto mode, set to "No".

<SW No. 4>

SW contents Main	Intake temperature display
ON/OFF	Yes/No
Comment	When you do not want to display the intake temperature, set to "No".

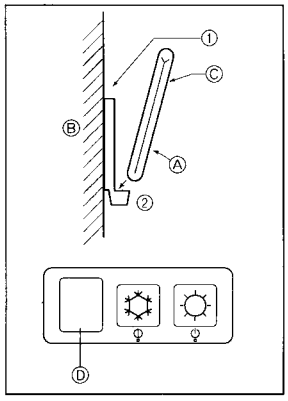

Fig. 7-5

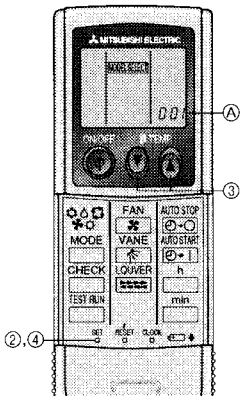

Fig. 7-6

7.2. Remote controller

7.2.1. For wired remote controller

1) Installing procedures

(1) Select an installing position for the remote controller. (Fig. 7-2)
The temperature sensors are located on both remote controller and indoor unit.

▶ **Procure the following parts locally:**
Two piece switch box
Thin copper conduit tube
Lock nuts and bushings
Ⓐ Remote controller profile
Ⓑ Required clearances surrounding the remote controller
Ⓒ Installation pitch

(2) Seal the service entrance for the remote controller cord with putty to prevent possible invasion of dew drops, water, cockroaches or worms. (Fig. 7-3)
Ⓐ For installation in the switch box:
Ⓑ For direct installation on the wall select one of the following:

- Prepare a hole through the wall to pass the remote controller cord (in order to run the remote controller cord from the back), then seal the hole with putty.
- Run the remote controller cord through the cut-out upper case, then seal the cut-out notch with putty similarly as above.

B-1. To lead the remote controller cord from the back of the controller:
B-2. To run the remote controller cord through the upper portion:

(3) For direct installation on the wall
Ⓒ Wall
Ⓓ Conduit
Ⓔ Lock nut
Ⓕ Bushing
Ⓖ Switch box
Ⓗ Remote controller cord
Ⓘ Seal with putty
Ⓙ Wood screw

2) Connecting procedures (Fig. 7-4)

① Connect the remote controller cord to the terminal block.
Ⓐ To TB5 on the indoor unit
Ⓑ TB6 (No polarity)
② Set the dip switch No.1 shown below when using two remote controller's for the same group.
Ⓒ Dip switches

Setting the dip switches

The dip switches are at the bottom of the remote controller. Remote controller Main/Sub and other function settings are performed using these switches. Ordinarily, only change the Main/Sub setting of SW No.1. (The factory settings are all "ON".)

7.2.2. For wireless remote controller

1) Installation area

- Area in which the remote controller is not exposed to direct sunshine.
- Area in which there is no nearby heating source.
- Area in which the remote controller is not exposed to cold (or hot) winds.
- Area in which the remote controller can be operated easily.
- Area in which the remote controller is beyond the reach of children.

2) Installation method (Fig. 7-5)

① Attach the remote controller holder to the desired location using two tapping screws.
② Place the lower end of the controller into the holder.
Ⓐ Remote controller
Ⓑ Wall
Ⓒ Display panel
Ⓓ Receiver

- The signal can travel up to approximately 7 meters (in a straight line) within 45 degrees to both right and left of the center line of the receiver.

3) Setting (Fig. 7-6)

① Insert batteries.
② Press the SET button with something sharp at the end.
MODEL SELECT blinks and Model No. is lighted.
③ Press the temp ▼ ▲ button to set the Model No.
④ Press the SET button with something sharp at the end.
MODEL SELECT and Model No. are lighted for three seconds, then turned off.

Indoor	Outdoor	Ⓐ Model No.
PLH, PCH, PKH (1.6, 2)	PUH	001
PLA, PCA, PKA (1.6, 2)	PUH, PUHZ	001
	PU	033
PKH (2.5, 3, 4)	PUH	003
PKA (2.5, 3, 4)	PUH, PUHZ	003
	PU	035

7. Electrical work

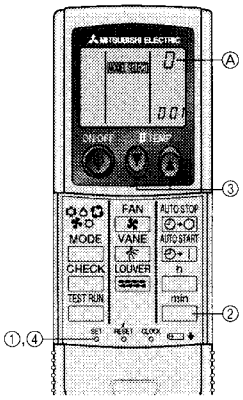

Fig. 7-7

4) Assigning a remote controller to each unit (Fig. 7-7)

Each unit can be operated only by the assigned remote controller.
Make sure each pair of an indoor unit PC board and a remote controller is assigned to the same pair No.

5) Wireless remote controller pair number setting operation

① Press the SET button with something sharp at the end.
Start this operation from the status of remote controller display turned off.
[MODEL SELECT] blinks and Model No. is lighted.

② Press the [min] button twice continuously.
Pair No. "0" blinks.

③ Press the temp ▼ ▲ button to set the pair number you want to set.

④ Press the SET button with something sharp at the end.
Set pair number is lighted for three seconds then turned off.

Ⓐ Pair No. of wireless remote controller	Indoor PC board
0	Factory setting
1	Cut J41
2	Cut J42
3–9	Cut J41, J42

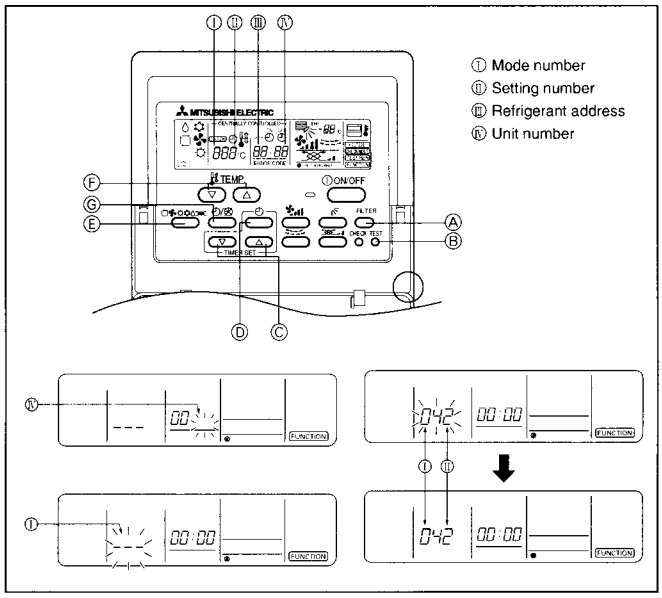

Fig. 7-8

7.3. Function settings

7.3.1. For wired remote controller (Fig. 7-8)

Changing the power voltage setting

- Be sure to change the power voltage setting depending on the voltage used.

① Go to the function setting mode.
Switch OFF the remote controller.
Press the Ⓐ and Ⓑ buttons simultaneously and hold them for at least 2 seconds. FUNCTION will start to flash.

② Use the Ⓒ button to set the refrigerant address (Ⅲ) to 00.

③ Press Ⓓ and [--] will start to flash in the unit number (Ⅳ) display.

④ Use the Ⓒ button to set the unit number (Ⅳ) to 00.

⑤ Press the Ⓔ MODE button to designate the refrigerant address/unit number. [--] will flash in the mode number (Ⅰ) display momentarily.

⑥ Press the Ⓕ buttons to set the mode number (Ⅰ) to 04.

⑦ Press the Ⓖ button and the current set setting number (Ⅱ) will flash.
Use the Ⓕ button to switch the setting number in response to the power supply voltage to be used.
Power supply voltage
240 V : setting number = 1
220 V, 230 V : setting number = 2

⑧ Press the MODE button Ⓔ and mode and the setting number (Ⅰ) and (Ⅱ) will change to being on constantly and the contents of the setting can be confirmed.

⑨ Press the FILTER Ⓐ and TEST RUN Ⓑ buttons simultaneously for at least two seconds. The function selection screen will disappear momentarily and the air conditioner OFF display will appear.

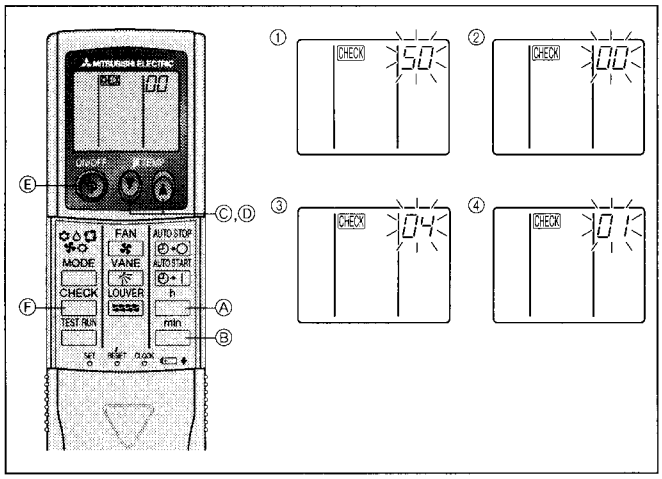

Fig. 7-9

7.3.2. For wireless remote controller (Fig. 7-9)

Changing the power voltage setting

Be sure to change the power voltage setting depending on the voltage used.

① Go to the function select mode
Press the [CHECK] button Ⓕ twice continuously.
(Start this operation from the status of remote controller display turned off.)
[CHECK] is lighted and "00" blinks.
Press the temp ▼ button Ⓒ once to set "50". Direct the wireless remote controller toward the receiver of the indoor unit and press the [h] button Ⓐ.

② Setting the unit number
Press the temp ▼ ▲ button Ⓒ and Ⓓ to set the unit number "00". Direct the wireless remote controller toward the receiver of the indoor unit and press the [min] button Ⓑ.

③ Selecting a mode
Enter 04 to change the power voltage setting using the ▼ Ⓒ and ▲ Ⓓ buttons. Direct the wireless remote controller toward the receiver of the indoor unit and press the [h] button Ⓐ.
Current setting number: 1 = 1 beep (one second)
2 = 2 beeps (one second each)
3 = 3 beeps (one second each)

④ Selecting the setting number
Use the ▼ Ⓒ and ▲ Ⓓ buttons to change the power voltage setting to 01 (240 V). Direct the wireless remote controller toward the sensor of the indoor unit and press the [h] button Ⓐ.

⑤ To select multiple functions continuously
Repeat steps ③ and ④ to change multiple function settings continuously.

⑥ Complete function selection
Direct the wireless remote controller toward the sensor of the indoor unit and press the ⊕ button Ⓔ.

Note:
Whenever changes are made to the function settings after installation or maintenance, be sure to record the changes with a mark in the "Setting" column of the Function table.

7. Electrical work

Function table

Select unit number 00

Mode	Settings	Mode no.	Setting no.	Initial setting	setting
Power failure automatic recovery	Not available	01	1	○	
	Available		2		
Indoor temperature detecting	Indoor unit operating average	02	1	○	
	Set by indoor unit's remote controller		2		
	Remote controller's internal sensor		3		
LOSSNAY connectivity	Not Supported	03	1	○	
	Supported (indoor unit is not equipped with outdoor-air intake)		2		
	Supported (indoor unit is equipped with outdoor-air intake)		3		
Power voltage	240 V	04	1		
	220 V, 230 V		2	○	
Auto mode (only for PUHZ)	Energy saving cycle automatically enabled	05	1	○	
	Energy saving cycle automatically disabled		2		

Select unit numbers 01 to 03 or all units (AL [wired remote controller]/07 [wireless remote controller])

Mode	Settings	Mode no.	Setting no.	Initial setting	setting
Filter sign	100Hr	07	1		
	2500Hr		2	○	
	No filter sign indicator		3		
Fan speed	Standard (PLH/PLA)/Silent (PCH/PCA)	08	1	○	
	High ceiling ① (PLH/PLA)/Standard (PCH/PCA)		2		
	High ceiling ② (PLH/PLA)/High ceiling (PCH/PCA)		3		
No. of air outlets	4 directions	09	1	○	
	3 directions		2		
	2 directions		3		
Installed options (high-performance filter)	Not supported	10	1	○	
	Supported		2		
Up/down vane setting	No vanes	11	1		
	Equipped with vanes (vanes angle setup ①)		2		
	Equipped with vanes (vanes angle setup ②)		3	○	
Energy saving air flow (Heating mode)	Disabled	12	1	○	
	Enabled		2		

8. Test run

8.1. Before test run

- **After completing installation and the wiring and piping of the indoor and outdoor units, check for refrigerant leakage, looseness in the power supply or control wiring, wrong polarity, and no disconnection of one phase in the supply.**
- **Use a 500-volt megohmmeter to check that the resistance between the power supply terminals and ground is at least 1.0MΩ.**
- **Do not carry out this test on the control wiring (low voltage circuit) terminals.**

⚠ **Warning:**

Do not use the air conditioner if the insulation resistance is less than 1.0MΩ.

Insulation resistance

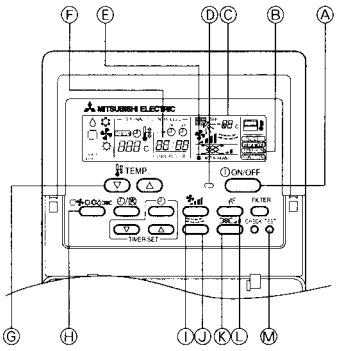

Fig. 8-1

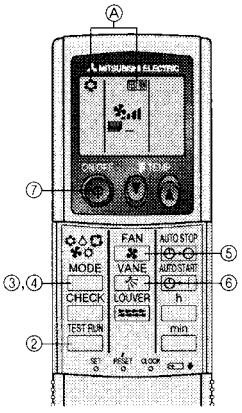

Fig. 8-2

8.2. Test run

The following 3 methods are available.

8.2.1. Using wired remote controller (Fig. 8-1)

① Turn on the power at least 12 hours before the test run.
② Press the [TEST] button twice. ➡ "TEST RUN" liquid crystal display
③ Press the [Mode selection] button. ➡ Make sure that wind is blown out.
④ Press the [Mode selection] button and switch to the cooling (or heating) mode.
➡ Make sure that cold (or warm) wind is blown out.
⑤ Press the [Fan speed] button. ➡ Make sure that the wind speed is switched.
⑥ Switch the wind direction by pressing the [Airflow] or [Louver] button.
➡ Make sure that horizontal outlet, downward outlet, and other wind direction adjustments are possible.
➡ Check operation of the outdoor unit fan.
⑦ Release test run by pressing the [ON/OFF] button. ➡ Stop
⑧ After the checks, always turn off the power.

8.2.2. Using wireless remote controller (Fig. 8-2)

① Turn on the power to the unit at least 12 hours before the test run.
② Press the TEST RUN button twice continuously.
(Start this operation from the status of remote controller display turned off.)
Ⓐ TEST RUN and current operation mode are displayed.
③ Press the MODE (❄ ♨ ✤ ☼ ⟲) button to activate COOL❄ mode, then check whether cool air is blown out from the unit.
④ Press the MODE (❄ ♨ ✤ ☼ ⟲) button to activate HEAT ☼ mode, then check whether warm air is blown out from the unit.
⑤ Press the FAN button and check whether fan speed changes.
⑥ Press the VANE button and check whether the auto vane operates properly.
⑦ Press the ON/OFF button to stop the test run.

Note:

- **Point the remote controller towards the indoor unit receiver while following steps ② to ⑦.**
- **It is not possible to run the in FAN, DRY or AUTO mode.**

8. Test run

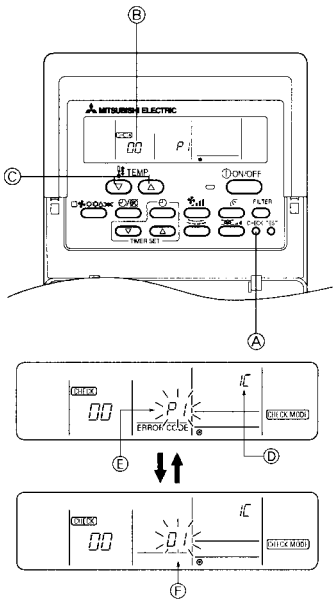

Fig. 8-3

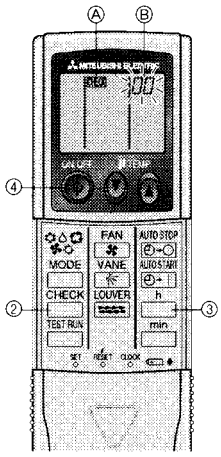

Fig. 8-4

8.2.3. Using SW4 in outdoor unit

Refer to the outdoor unit installation manual.

8.3. Self-check

8.3.1. Wired remote controller (Fig. 8-3)

① Turn on the power.
② Press the [CHECK] button twice.
③ Set refrigerant address with [TEMP] button if system control is used.
④ Press the [ON/OFF] button to stop the self-check.
Ⓐ CHECK button
Ⓑ Refrigerant address
Ⓒ TEMP. button
Ⓓ IC: Indoor unit
OC: Outdoor unit
Ⓔ Check code
Ⓕ Unit address

8.3.2. Wireless remote controller (Fig. 8-4)

① Turn on the power.
② Press the CHECK button twice.
(Start this operation from the status of remote controller display turned off.)
Ⓐ CHECK begins to light.
Ⓑ «00» begins to blink.
③ While pointing the remote controller toward the unit's receiver, press the h button. The check code will be indicated by the number of times that the buzzer sounds from the receiver section and the number of blinks of the operation lamp.
④ Press the ON/OFF button to stop the self-check.

- For description of each check code, refer to the following table.

① Check code	Symptom	② Buzzer sound	③ OPE LED
P1	Intake sensor error	Single beep × 1	Lit for 1 sec. × 1
P2	Pipe sensor error	Single beep × 2	Lit for 1 sec. × 2
P4	Drain sensor error	Single beep × 4	Lit for 1 sec. × 4
P5	Drain pump error	Single beep × 5	Lit for 1 sec. × 5
P6	Freezing / Overheating safeguard operation	Single beep × 6	Lit for 1 sec. × 6
P8	Pipe temperature error	Single beep × 8	Lit for 1 sec. × 8
P9	TH5 sensor error	Single beep × 2	Lit for 1 sec. × 2
U0–UP	Outdoor unit error	Double beep × 1	Lit for 0.4 sec. + 0.4 sec. × 1
F1–FA	Outdoor unit error	Double beep × 1	Lit for 0.4 sec. + 0.4 sec. × 1
E0–E5	Signal error between remote controller and indoor units	Sounds other than above	Lights other than above
E6–EF	Communication error between indoor and outdoor units	Sounds other than above	Lights other than above
– –	No alarm history	No sound	Not lit
F F F F	No unit	Triple beep	Not lit

- On wireless remote controller
② The continuous buzzer sounds from receiving section of indoor unit.
③ Blink of operation lamp
- On wired remote controller
① Check code displayed in the LCD.

- If the unit cannot be operated properly after the above test run has been performed, refer to the following table to remove the cause.

Symptom			Cause
Wired remote controller		LED 1, 2 (PCB in outdoor unit)	
H0	For about 2 minutes following power-on	After LED 1, 2 are lighted, LED 2 is turned off, then only LED 1 is lighted. (Correct operation)	• For about 2 minutes following power-on, operation of the remote controller is not possible due to system start-up. (Correct operation)
H0 → Error code	After about 2 minutes has expired following power-on	Only LED 1 is lighted. → LED 1, 2 blink.	• Connector for the outdoor unit's protection device is not connected. • Reverse or open phase wiring for the outdoor unit's power terminal block (L1, L2, L3)
Display messages do not apper even when operation switch is turned ON (operation lamp does not light up).		Only LED 1 is lighted. → LED 1 blinks twice, LED 2 blinks once.	• Incorrect wiring between indoor and outdoor units (incorrect polarity of S1, S2, S3) • Remote controller wire short

On the wireless remote controller with condition above, following phenomena takes place.
- No signals from the remote controller are accepted.
- OPE lamp is blinking.
- The buzzer makes a short pipng sound.

8. Test run

Note:
Operation is not possible for about 30 seconds after cancellation of function selection. (Correct operation)

For description of each LED (LED1, 2, 3) provided on the indoor controller, refer to the following table.

LED1 (power for microcomputer)	Indicates whether control power is supplied. Make sure that this LED is always lit.
LED2 (power for remote controller)	Indicates whether power is supplied to the remote controller. This LED lights only in the case of the indoor unit which is connected to the outdoor unit refrigerant address "0".
LED3 (communication between indoor and outdoor units)	Indicates state of communication between the indoor and outdoor units. Make sure that this LED is always blinking.

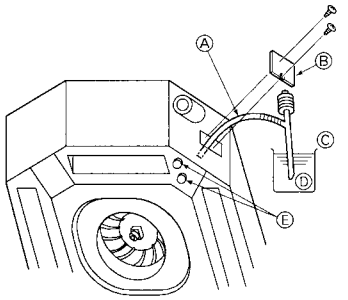

Fig. 8-5

8.4. Check of drainage (Fig. 8-5)

- During the trial run, ensure the water is being properly drained out and that no water is leaking from joints.
- Always check this during installation even if the unit is not required to provide cooling/drying at that time.
- Similarly, check the drainage before finishing ceiling installation in a new premises.

(1) Remove the cover of the water supply inlet and add about 1000 cc of water using a water supply pump etc. During this process, be careful not to spray water into the drain pump mechanism.
(2) Confirm that water is being drained out through the drainage outlet, after switching over from remote control mode to trial run mode.
(3) After checking the drainage, ensure that the cover is replaced and the power supply is isolated.
(4) After confirming the drainage system is functioning, replace the drain plug.

9. System control

Refer to the outdoor unit installation manual.

10. Installing the grille

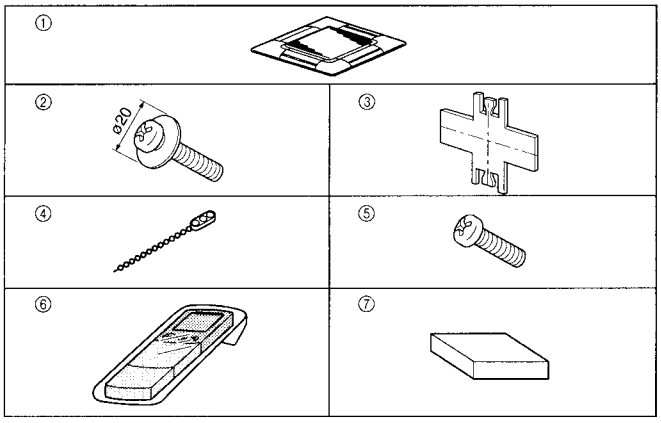

Fig. 10-1

10.1. Checking the contents (Fig. 10-1)

- This kit contains this manual and the following parts.

	Accessory name	Q'ty	Remark
①	Grille	1	950 × 950 (mm)
②	Screw with captive washer	4	M5 × 0.8 × 25
③	Gauge	1	(Divided into four parts)
④	Fastener	2	
⑤	Screw	4	4 × 8
⑥	Wireless remote controller	1	for PLP-6AALM
⑦	Wired remote controller	1	for PLP-6AAM

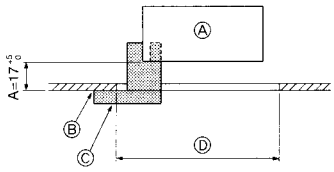

Fig. 10-2

10.2. Preparing to attach the grille (Fig. 10-2)

- With the gauge ③ supplied with this kit, adjust and check the positioning of the unit relative to the ceiling. If the unit is not properly positioned relative to the ceiling, it may allow air leaks or cause condensation to collect.
- Make sure that the opening in the ceiling is within the following tolerances: 860 × 860 - 910 × 910
- Make sure that step A is performed within 17-22 mm. Damage could result by failing to adhere to this range.

Ⓐ Main unit
Ⓑ Ceiling
Ⓒ Gauge ③ (inserted into the unit)
Ⓓ Ceiling opening dimensions

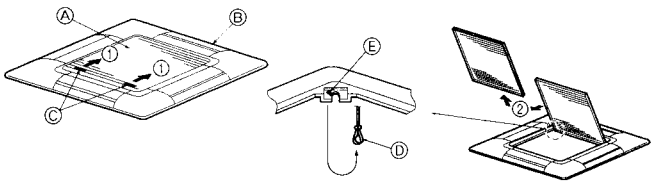

Fig. 10-3

10.2.1. Removing the intake grille (Fig. 10-3)

- Slide the levers in the direction indicated by the arrow ① to open the intake grille.
- Unlatch the hook that secures the grille.
  * Do not unlatch the hook for the intake grille.
- With the intake grille in the "open" position, remove the hinge of the intake grille from the grille as indicated by the arrow ②.

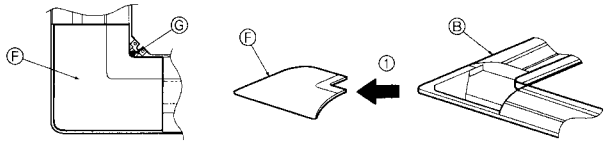

Fig. 10-4

10.2.2. Removing the corner panel (Fig. 10-4)

- Remove the screw from the corner of the corner panel. Slide the corner panel as indicated by the arrow ① to remove the corner panel.

Ⓐ Intake grille
Ⓑ Grille
Ⓒ Intake grille levers
Ⓓ Grille hook
Ⓔ Hole for the grille's hook
Ⓕ Corner panel
Ⓖ Screw

10. Installing the grille

	4-directional	3-directional
Blowout direction patterns	One pattern: Factory setting	4 patterns: One air outlet fully closed
	2-directional	
Blowout direction patterns	6 patterns: Two air outlet fully closed	

10.3. Selection of the air outlets

For this grille the discharge direction is available in 11 patterns. Also, by setting the Remote controller to the appropriate settings, you can adjust the air-flow and speed. Select the required settings from the Table according to the location in which you want to install the unit.

1) Decide on the discharge direction pattern.
2) Be sure to set the remote contoller to the appropriate settings, according to the number of air outlets and the height of the ceiling on which the unit will be installed.

Note:
For 3 and 2-directional, please use the air outlet shutter plate (option).

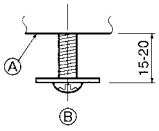

Fig. 10-5

10.4. Installing the grille

10.4.1. Preparations (Fig. 10-5)

- Install the two enclosed screws with washer ② in the main unit (at the corner drain pipe area and at the opposite corner) as shown in the diagram.

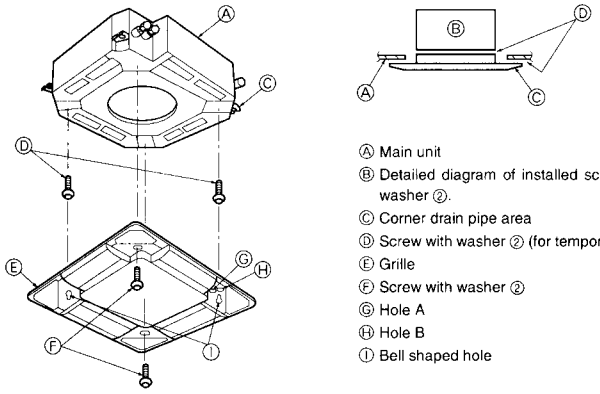

Fig. 10-6

10.4.2. Temporary installation of the grille (Fig. 10-6)

- Temporarily secure the grille using the bell shaped holes by aligning the corner drain pipe area of the main unit with the two holes of the grille that are marked A and B.
  - * Make sure that the lead wiring of the grille does not get pinched between the grille and the main unit.

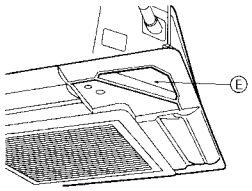

Fig. 10-7

10.4.3. Securing the grille (Fig. 10-7)

- Secure the grille to the main unit by tightening the previously installed two screws (with captive washer) as well as the two remaining screws (with captive washer).
  - * Make sure that there are no gaps between the main unit and the grille or the grille and the ceiling.

Fixing gaps between the grille and the ceiling
With the grille attached, adjust the height of the main unit to close the gap.

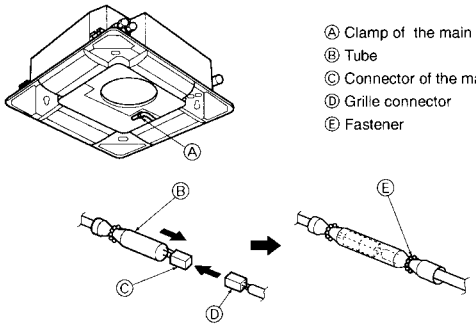

Fig. 10-8

10.4.4. Wire connection (Fig. 10-8)

- Be sure to connect the unit to the connector (white, 10-pole). Next, attach the white glass tube that comes with the main unit so that the tube covers the connector. Close the opening of the glass tube with the fastener.
- Make sure that there is no slack in the lead wire at the clamp of the main unit.

⚠ Warning:
If the connector is not covered with the glass tube, tracking resulting in fire may occur.

10. Installing the grille

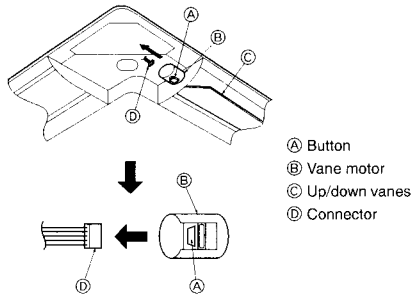

Fig. 10-9

10.5. Locking the up/down airflow direction (Fig. 10-9)

The vanes of the unit can be set and locked in up or down orientations depending upon the environment of use.

- Set according to the preference of the customer.
  The operation of the fixed up/down vanes and all automatic controls cannot be performed using the remote controller. In addition, the actual position of the vanes may differ from the position indicated on the remote controller.

① Turn off the main power switch.
Injuries and or an electrical shock may occur while the fan of the unit is rotating.

② Disconnect the connector for the vane motor of the vent that you want to lock.
(While pressing the button, remove the connector in the direction indicated by the arrow as shown in the diagram.) After removing the connector, insulate it with tape.

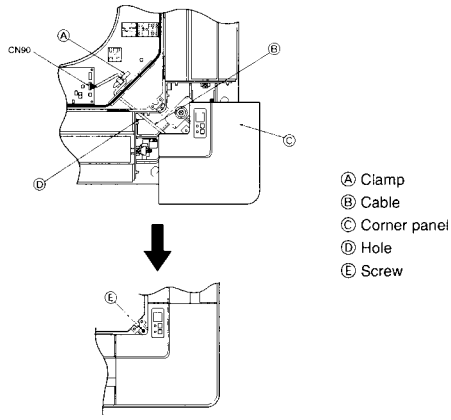

Fig. 10-10

10.6. Installing the wireless sensor (Fig. 10-10)

- Pull out the wireless sensor cable from the square hole in the corner panel of the refrigerant piping section of the main unit.
- Feed the cable through the electric component box of the main unit as shown in the illustration, and then connect it to CN90 on the control board. Adjust the length of the cable so the corner panel can be removed, and then secure the cable with the clamp.

10.7. Check

- Make sure that there is no gap between the unit and the grille, or between the grille and the surface of the ceiling. If there is any gap between the unit and the grille, or between the grille and the surface of the ceiling, it may cause dew to collect.
- Make sure that the wires have been securely connected.

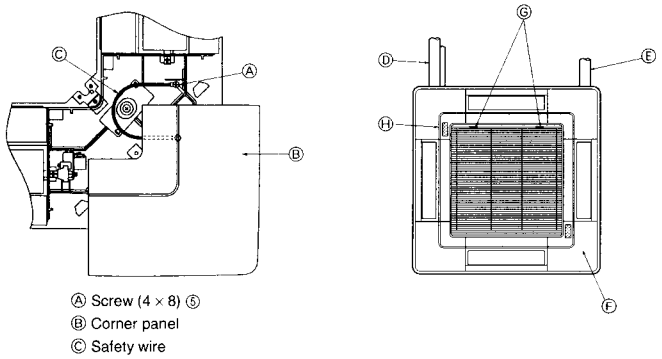

Fig. 10-11

10.8. Installing the intake grille (Fig. 10-11)

Note:

When reinstalling the corner panels (each with a safety wire attached), connect the other end of each safety wire to the grille using a screw (4 pcs, 4 × 8) as shown in the illustration.

* If the corner panels are not attached, they may fall off while the unit is operating.

- Perform the procedure that is described in "10.2. Preparing to attach the grille" in reverse order to install the intake grille and the corner panel.
- Multiple units can be installed with grille so that the position of the logo on each corner panel is consistent with the other units regardless of the orientation of the intake grille. Align the logo on the panel according to the wishes of the customer as shown in the diagram to the left. (The position of the grille can be changed.)

Ⓓ Refrigerant piping of the main unit
Ⓔ Drain piping of the main unit
Ⓕ Position of the corner panel when sent from the factory (logo attached).
* Installation in any position is possible.
Ⓖ Position of the levers on the intake grille when sent from the factory.
* Although the clips can be installed in any of four positions, the configuration shown here is recommended.
(It is not necessary to remove the intake grille when maintenance is performed on the electric component box of the main unit.)
Ⓗ Receiver (Only PLP-6AALM Panel)

A.1.15 SAFETY DEVICE SETTING

PLA-RP1.6AA / PLA-RP2AA / PLA-RP2.5AA
PLA-RP3AA / PLA-RP4AA / PLA-RP5AA / PLA-RP6AA

Model / Safety device	PLA-RP1.6AA	PLA-RP2AA	PLA-RP2.5AA	PLA-RP3AA	PLA-RP4AA	PLA-RP5AA	PLA-RP6AA
Fan motor themal protector	ON 80±20℃ OFF 130℃						