Back to Index page

B.2 CEILING-CONCEALED (SEZ)

B.2.1 FEATURES B-40
B.2.2 SPECIFICATIONS B-41
B.2.3 OUTLINES AND DIMENSIONS B-43
B.2.4 WIRING DIAGRAM B-45
B.2.5 REFRIGERANT SYSTEM DIAGRAM B-47
B.2.6 PERFORMANCE DATA B-48
B.2.6.1 PERFORMANCE DATA B-48
B.2.6.2 PERFORMANCE CURVES B-57
B.2.7 NOISE CRITERIA CURVES B-61
B.2.8 REMOTE CONTROLLER B-63
B.2.9 TROUBLESHOOTING B-65
B.2.10 INSTALLATION PROCEDURE B-66
B.2.10.1 SEZ-A12,A18,A24AR.TH B-66
B.2.10.2 SEZ-A09CR.TH B-80
B.2.11 SAFETY DEVICE SETTINGS B-92

B.2.1 FEATURES

Indoor unit

● SEZ-A09CR

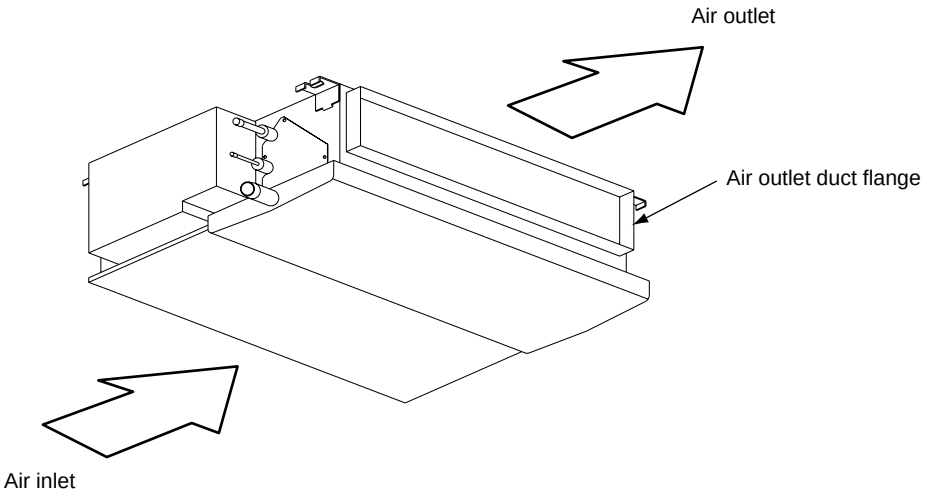

● SEZ-A12AR
SEZ-A18AR
SEZ-A24AR

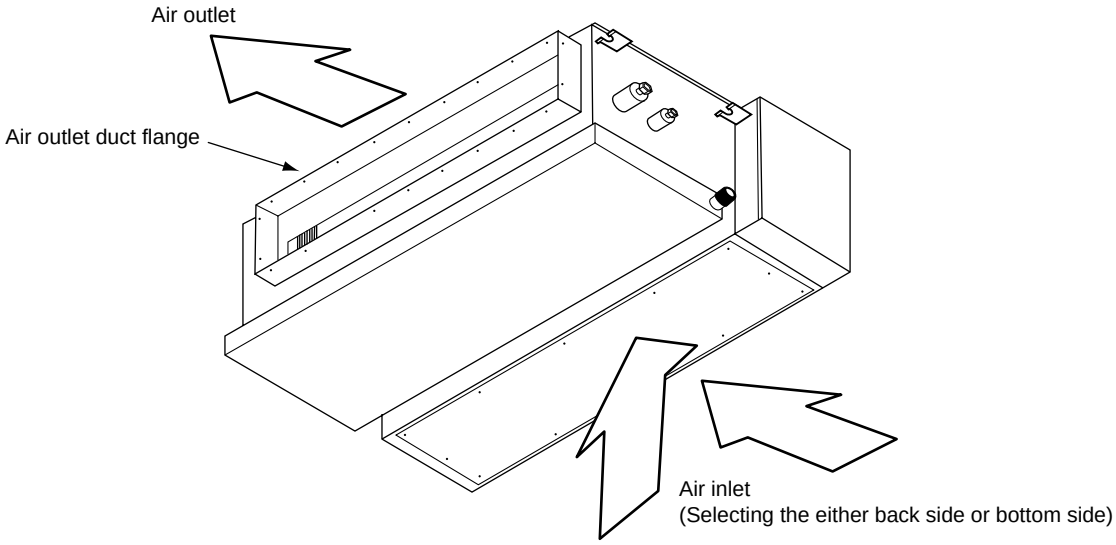

Nice fit for lowered ceilings:
Superbly economical operation thanks to inverter control.

The low 270mm height of the SEZ-AR Series (225mm for the SEZ-A09CR) guarantees less installation hassle with optimum air conditioning efficiency and comfort. The outdoor unit, indoor unit and remote controller work together efficiently to make these units ideal for use at homes, offices, and hotels.

B.2.2 SPECIFICATIONS

Indoor model			SEZ-A12AR		SEZ-A18AR	
Function			Cooling	Heating	Cooling	Heating
Power supply			Single phase 230V, 50Hz		Single phase 230V, 50Hz	
Capacity	Capacity	Btu/h	11,600	13,300	16,000	19,400
		kW	3.4	3.9	4.7	5.7
	Total input	kW	1.09	1.10	1.67	1.78
	Air flow (High/Low)	m³ /h	780/600		1020/720	
Electrical data	Power outlet	A	10		20	
	Running current ✻1	A	0.22		0.27	
	Power input Rated frequency	W	48		61	
	Auxiliary heater	A(kW)	—		—	
	Power factor ✻1	%	94	95	97	98
	Fan motor current ✻1	A	0.22		0.27	
Fan motor	Model		PK6V19-EF		PK6V32-EF	
	Winding resistance (at20℃)	Ω	WHT-BLK : 251.4 BLK-BLU : 19.9 BLU-YLW : 26.5 YLW-BRN : 13.2 BRN-RED : 50.0		WHT-BLK : 161.9 BLK-BLU : 50.3 BLU-YLW : 18.7 YLW-BRN : 8.0 BRN-RED : 39.2	
	Dimensions W×H×D	mm	1100×270×700		1100×270×700	
	Weight	kg	33.5		33.5	
Special remarks	Air direction		1		1	
	Sound level (High/Low)	dB(A)	35/30		39/31	
	Fan speed (High/Low)	rpm	770/630		840/640	
	Fan speed regulator		3		3	
	Thermistor RT11 (at 25℃)	kΩ	10		10	
	Thermistor RT12 (at 25℃)	kΩ	10		10	
	Thermistor RT13 (at 25℃)	kΩ	10		10	
Remote controller model			PAR-20MAA		PAR-20MAA	

NOTE : Test conditions are based on ISO 5151
Cooling : Indoor D.B. 27℃ W.B. 19℃
Outdoor D.B. 35℃ W.B. 24℃
Heating : Indoor D.B. 20℃ W.B. 5℃
Outdoor D.B. 7℃ W.B. 6℃
Refrigerant piping length (one way): 5m
✻1 Measured under rated operating frequency.

Indoor model			SEZ-A24AR		SEZ-A09CR	
Function			Cooling	Heating	Cooling	Heating
Power supply			Single phase 230V, 50Hz		Single phase 230V, 50Hz	
Capacity	Capacity	Btu/h	18,400	22,100	8,100	10,200
		kW	5.5	6.5	2.4	3.0
	Total input	kW	1.92	2.02	0.74	0.88
	Air flow (High/Low)	m³ /h	1200/720		474/288	
Electrical data	Power outlet	A	20		10	
	Running current ✻1	A	0.39		0.28	
	Power input Rated frequency	W	87		60	
	Auxiliary heater	A(kW)	—		—	
	Power factor ✻1	%	98	98	97	97
	Fan motor current ✻1	A	0.39		0.28	
Fan motor	Model		PK6V50-EF		CRC4417BB	
	Winding resistance (at20℃)	Ω	WHT-BLK : 101.1 BLK-BLU : 56.1 BLU-YLW : 14.7 YLW-BRN : 6.7 BRN-RED : 28.2		WHT-BLK : 261 WHT-BRN : 294 WHT-YLW : 389 WHT-BLU : 475	
Dimensions W×H×D		mm	1100×270×700		990×225×550	
Weight		kg	33.5		19	
Special remarks	Air direction		1		1	
	Sound level (High/Low)	dB(A)	43/32		36/25	
	Fan speed (High/Low)	rpm	890/660		—	
	Fan speed regulator		3		2	
	Thermistor RT11 (at 25℃)	kΩ	10		10	
	Thermistor RT12 (at 25℃)	kΩ	10		10	
	Thermistor RT13 (at 25℃)	kΩ	10		10	
Remote controller model			PAR-20MAA		PAR-20MAA	

NOTE : Test conditions are based on ISO 5151
Cooling : Indoor D.B. 27℃ W.B. 19℃
Outdoor D.B. 35℃ W.B. 24℃
Heating : Indoor D.B. 20℃ W.B. 15℃
Outdoor D.B. 7℃ W.B. 6℃
Refrigerant piping length (one way): 5m
✻1 Measured under rated operating frequency.

B.2.3 OUTLINES AND DIMENSIONS

Unit : mm

SEZ-A12AR
SEZ-A18AR
SEZ-A24AR

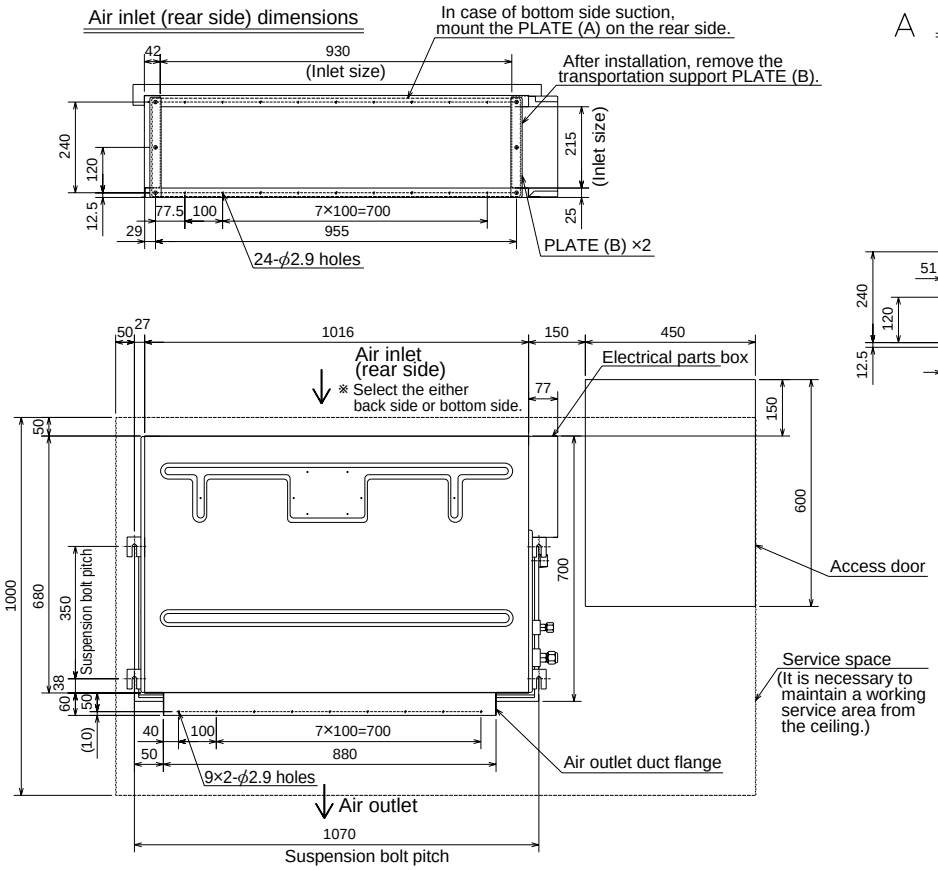

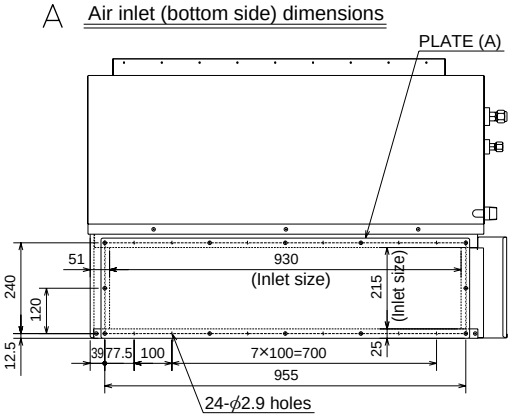

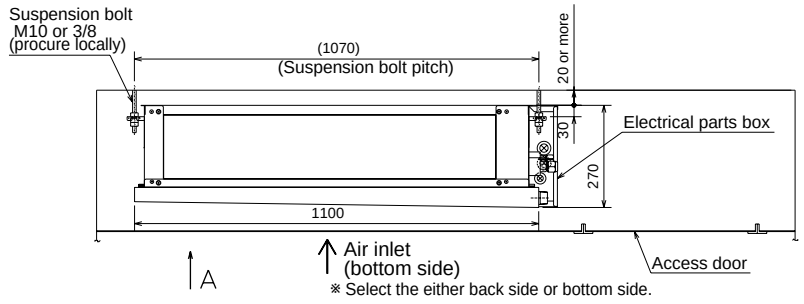

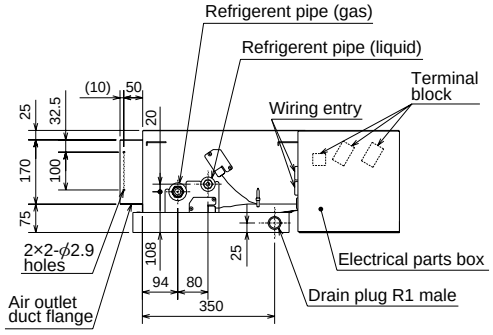

Models	Refrigerent pipe (liquid)	Refrigerent pipe (gas)
SEZ-A12AR	ϕ6.35mm flared connection 1/4F	ϕ9.52mm flared connection 3/8F
SEZ-A18AR	ϕ6.35mm flared connection 1/4F	ϕ12.7mm flared connection 1/2F
SEZ-A24AR	ϕ6.35mm flared connection 1/4F	ϕ15.88mm flared connection 5/8F

SEZ-A09CR

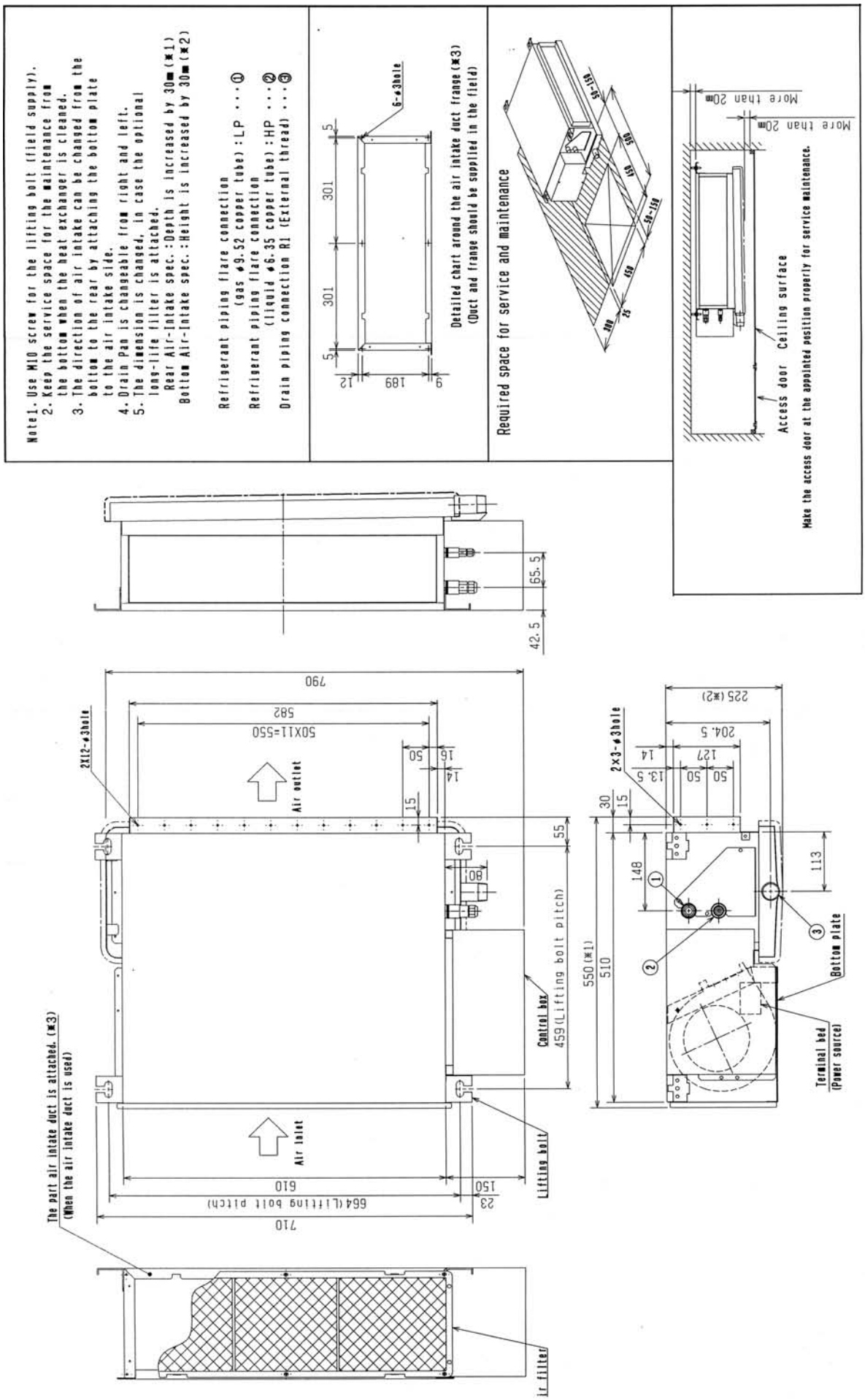
Note1. Use M10 screw for the lifting bolt (field supply).
2. Keep the service space for the maintenance from the bottom when the heat exchanger is cleaned.
3. The direction of air intake can be changed from the bottom to the rear by attaching the bottom plate to the air intake side.
4. Drain Pan is changeable from right and left.
5. The dimension is changed, in case the optional long-life filter is attached.
Rear Air-Intake spec. :Depth is increased by 30mm (※1)
Bottom Air-Intake spec. :Height is increased by 30mm (※2)
Refrigerant piping flare connection
(Gas φ9.52 copper tube) :LP ···①
Refrigerant piping flare connection
(Liquid φ6.35 copper tube) :HP ···②
Drain piping connection R1 (External thread) ···③
6-φ3hole
Detailed chart around the air intake duct frange (※3)
(Duct and frange should be supplied in the field)
Required space for service and maintenance
More than 20mm
More than 20mm
Access door
Ceiling surface
Make the access door at the appointed position properly for service maintenance.
65.5
42.5
790
582
50X11=550
2X12-φ3hole
Air outlet
Air inlet
Control box
459 (Lifting bolt pitch)
Lifting bolt
710
664 (Lifting bolt pitch)
610
The part air intake duct is attached. (※3)
(When the air intake duct is used)
Air filter
225 (※2)
204.5
2x3-φ3hole
550 (※1)
510
Bottom plate
Terminal bed
(Power source)

B.2.4 WIRING DIAGRAM

SEZ-A12AR
SEZ-A18AR
SEZ-A24AR

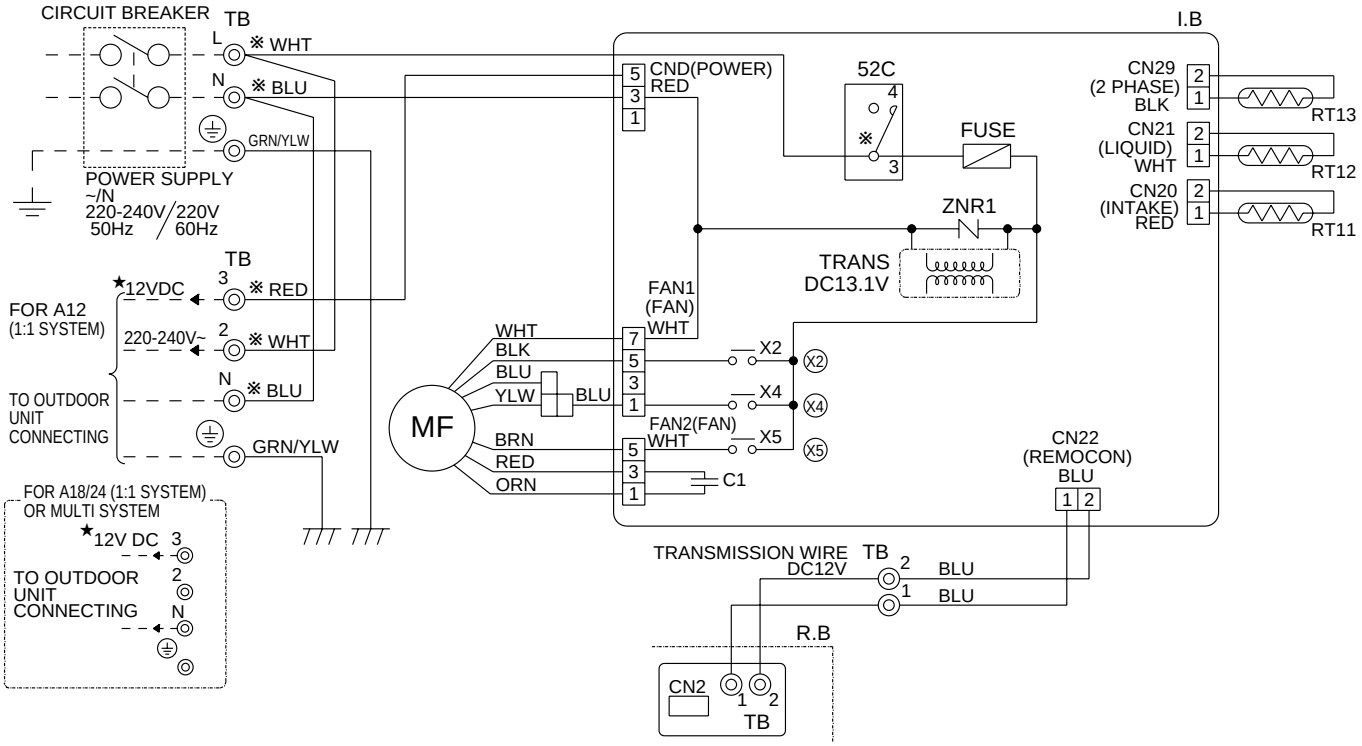

[LEGEND]

SYMBOL	NAME	SYMBOL	NAME
I.B	INDOOR CONTROLLER BOARD	MF	FAN MOTOR
		RT11	ROOM TEMPERATURE THERMISTOR
C1	FAN MOTOR CAPACITOR	RT12	PIPE TEMPERATURE THERMISTOR / LIQUID
FUSE	FUSE(3.15A)	RT13	CONDENSER / EVAPORATOR TEMPERATURE THERMISTOR
X2,X4,X5	RELAY(FAN MOTOR)	TB	TERMINAL BLOCK
ZNR1	VARISTOR	R.B	REMOTE CONTROLLER BOARD
52C	COMPRESSOR CONTACTOR		

★ The 12V DC is NOT always against the ground. Terminal 3 has 12V DC against terminal N. However, between 3 and 2, these terminals are NOT electrically insulated by the transformer or other device.

NOTES:

1.Since the indoor fan motor(MF) is connected with 50Hz power,if 60Hz power is used, change the wiring connection showing fig: *1
Indoor Fan Motor(MF) for 60Hz

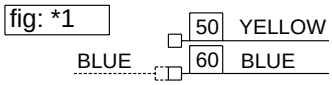

2.About the outdoor side electric wiring refer to the outdoor unit electlic wiring diagram for servicing.
3.Use copper conductors only. (For field wiring)
4.Symbols below indicate.
◎ : Terminal block ▭▭▭ : Connector

How to remove the terminals shown at " ※ " mark.

" ※ " shows the terminals with a lock mechanism, so they cannot be removed when you pull the lead wire.
Be sure to pull the wire by pushing the locking lever (projected part) of the terminal with a finger.

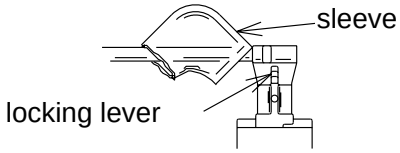

①Slide the sleeve.
②Pull the wire while pushing the locking lever.

SEZ-A09CR

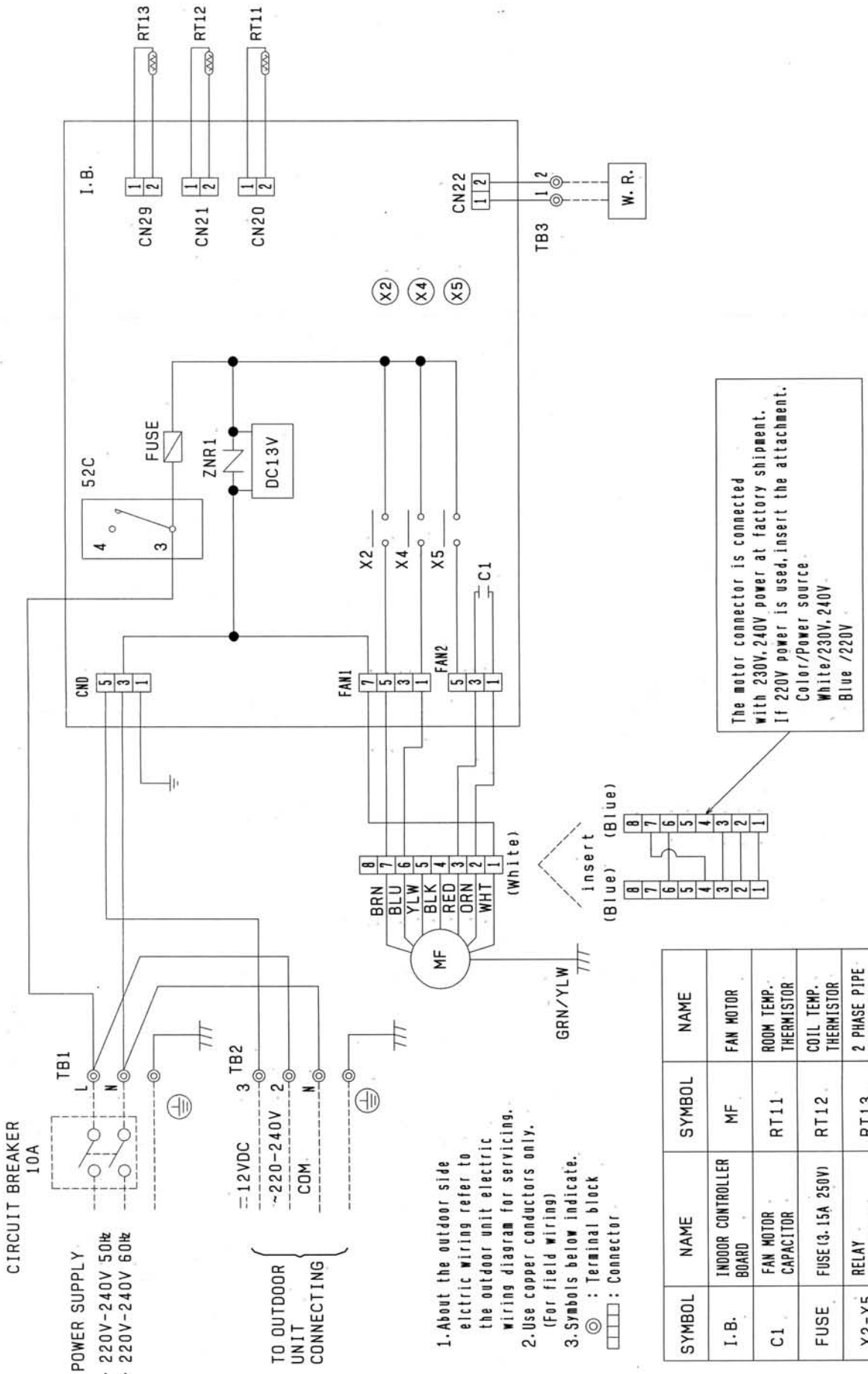

SYMBOL	NAME	SYMBOL	NAME
I.B.	INDOOR CONTROLLER BOARD	MF	FAN MOTOR
C1	FAN MOTOR CAPACITOR	RT11	ROOM TEMP. THERMISTOR
FUSE	FUSE(3.15A 250V)	RT12	COIL TEMP. THERMISTOR
X2-X5	RELAY (FAN MOTOR)	RT13	2 PHASE PIPE THERMISTOR
ZNR1	VARISTOR	TB1,TB2 TB3	TERMINAL BLOCK
52C	COMPRESSOR CONTACTOR	W. R.	WIRED REMOTE CONTROLLER

B.2.5 REFRIGERANT SYSTEM DIAGRAM

SEZ-A12AR
SEZ-A18AR
SEZ-A24AR

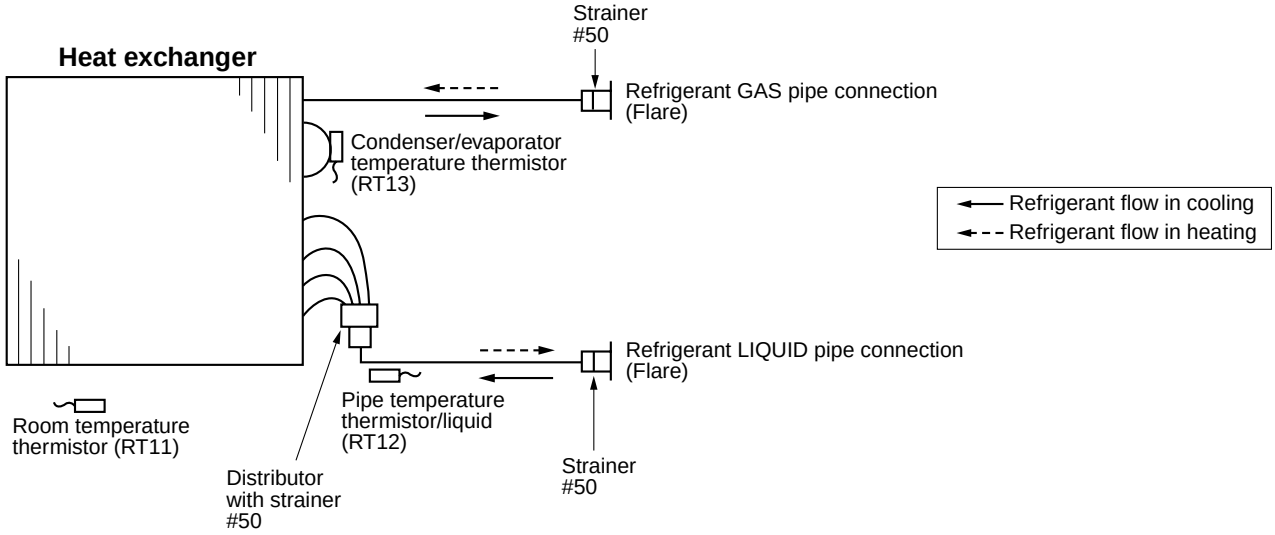

SEZ-A09CR

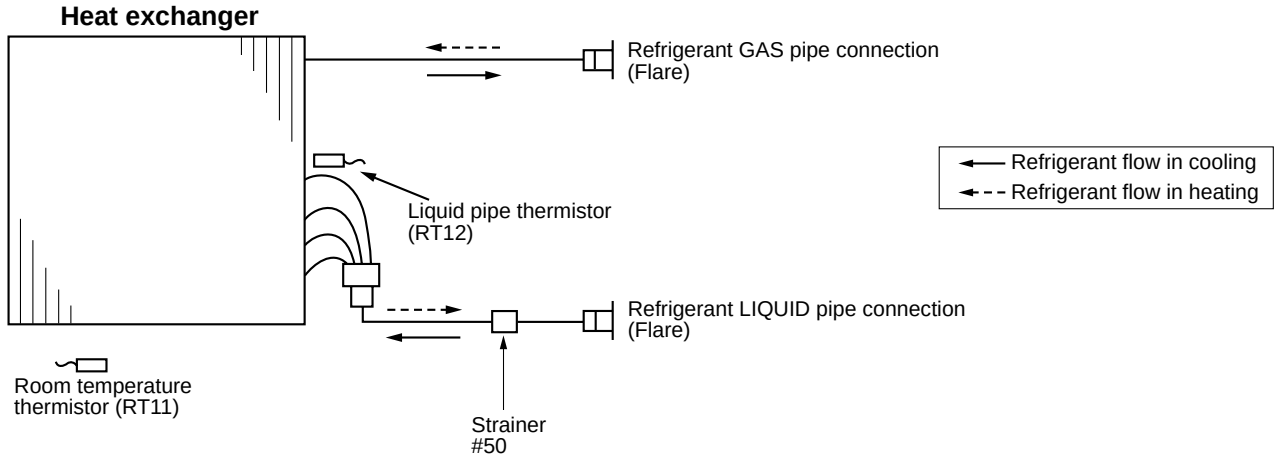

B.2.6 PERFORMANCE DATA

B.2.6.1 PERFORMANCE DATA

COOLING operation Rated frequency 57Hz

SEZ-A09CR / SUZ-A09VR

CAPACITY : 2.4(kW) INPUT : 740(W) SHF : 0.78

		OUTDOOR D.B.(℃)															
INDOOR	INDOOR	21				25				27				30			
D.B.(℃)	W.B.(℃)	Q	SHC	SHF	INPUT	Q	SHC	SHF	INPUT	Q	SHC	SHF	INPUT	Q	SHC	SHF	INPUT
21	18	2.82	1.69	0.60	592	2.70	1.62	0.60	622	2.59	1.56	0.60	651	2.50	1.50	0.60	681
21	20	2.94	1.41	0.48	622	2.82	1.35	0.48	659	2.74	1.31	0.48	673	2.64	1.27	0.48	703
22	18	2.82	1.80	0.64	592	2.70	1.73	0.64	622	2.59	1.66	0.64	651	2.50	1.60	0.64	681
22	20	2.94	1.53	0.52	622	2.82	1.47	0.52	659	2.74	1.42	0.52	673	2.64	1.37	0.52	703
22	22	3.06	1.22	0.40	644	2.95	1.18	0.40	685	2.88	1.15	0.40	703	2.76	1.10	0.40	733
23	18	2.82	1.92	0.68	592	2.70	1.84	0.68	622	2.59	1.76	0.68	651	2.50	1.70	0.68	681
23	20	2.94	1.65	0.56	622	2.82	1.58	0.56	659	2.74	1.53	0.56	673	2.64	1.48	0.56	703
23	22	3.06	1.35	0.44	644	2.95	1.30	0.44	685	2.88	1.27	0.44	703	2.76	1.21	0.44	733
24	18	2.82	2.03	0.72	592	2.70	1.94	0.72	622	2.59	1.87	0.72	651	2.50	1.80	0.72	681
24	20	2.94	1.76	0.60	622	2.82	1.69	0.60	659	2.74	1.64	0.60	673	2.64	1.58	0.60	703
24	22	3.06	1.47	0.48	644	2.95	1.42	0.48	685	2.88	1.38	0.48	703	2.76	1.32	0.48	733
24	24	3.22	1.16	0.36	673	3.10	1.11	0.36	710	3.02	1.09	0.36	733	2.93	1.05	0.36	770
25	20	2.94	1.88	0.64	622	2.82	1.80	0.64	659	2.74	1.75	0.64	673	2.64	1.69	0.64	703
25	22	3.06	1.59	0.52	644	2.95	1.54	0.52	685	2.88	1.50	0.52	703	2.76	1.44	0.52	733
25	24	3.22	1.29	0.40	673	3.10	1.24	0.40	710	3.02	1.21	0.40	733	2.93	1.17	0.40	770
26	18	2.82	2.26	0.80	592	2.70	2.16	0.80	622	2.59	2.07	0.80	651	2.50	2.00	0.80	681
26	20	2.94	2.00	0.68	622	2.82	1.92	0.68	659	2.74	1.86	0.68	673	2.64	1.80	0.68	703
26	22	3.06	1.71	0.56	644	2.95	1.65	0.56	685	2.88	1.61	0.56	703	2.76	1.55	0.56	733
26	24	3.22	1.42	0.44	673	3.10	1.36	0.44	710	3.02	1.33	0.44	733	2.93	1.29	0.44	770
26	26	3.31	1.06	0.32	710	3.22	1.03	0.32	747	3.17	1.01	0.32	770	3.07	0.98	0.32	792
27	18	2.82	2.37	0.84	592	2.70	2.27	0.84	622	2.59	2.18	0.84	651	2.50	2.10	0.84	681
27	20	2.94	2.12	0.72	622	2.82	2.03	0.72	659	2.74	1.97	0.72	673	2.64	1.90	0.72	703
27	22	3.06	1.84	0.60	644	2.95	1.77	0.60	685	2.88	1.73	0.60	703	2.76	1.66	0.60	733
27	24	3.22	1.54	0.48	673	3.10	1.49	0.48	710	3.02	1.45	0.48	733	2.93	1.41	0.48	770
27	26	3.31	1.19	0.36	710	3.22	1.16	0.36	747	3.17	1.14	0.36	770	3.07	1.11	0.36	792
28	18	2.82	2.48	0.88	592	2.70	2.38	0.88	622	2.59	2.28	0.88	651	2.50	2.20	0.88	681
28	20	2.94	2.23	0.76	622	2.82	2.14	0.76	659	2.74	2.08	0.76	673	2.64	2.01	0.76	703
28	22	3.06	1.96	0.64	644	2.95	1.89	0.64	685	2.88	1.84	0.64	703	2.76	1.77	0.64	733
28	24	3.22	1.67	0.52	673	3.10	1.61	0.52	710	3.02	1.57	0.52	733	2.93	1.52	0.52	770
28	26	3.31	1.32	0.40	710	3.22	1.29	0.40	747	3.17	1.27	0.40	770	3.07	1.23	0.40	792
29	18	2.82	2.59	0.92	592	2.70	2.48	0.92	622	2.59	2.38	0.92	651	2.50	2.30	0.92	681
29	20	2.94	2.35	0.80	622	2.82	2.26	0.80	659	2.74	2.19	0.80	673	2.64	2.11	0.80	703
29	22	3.06	2.08	0.68	644	2.95	2.01	0.68	685	2.88	1.96	0.68	703	2.76	1.88	0.68	733
29	24	3.22	1.80	0.56	673	3.10	1.73	0.56	710	3.02	1.69	0.56	733	2.93	1.64	0.56	770
29	26	3.31	1.46	0.44	710	3.22	1.42	0.44	747	3.17	1.39	0.44	770	3.07	1.35	0.44	792
30	18	2.82	2.71	0.96	592	2.70	2.59	0.96	622	2.59	2.49	0.96	651	2.50	2.40	0.96	681
30	20	2.94	2.47	0.84	622	2.82	2.37	0.84	659	2.74	2.30	0.84	673	2.64	2.22	0.84	703
30	22	3.06	2.20	0.72	644	2.95	2.13	0.72	685	2.88	2.07	0.72	703	2.76	1.99	0.72	733
30	24	3.22	1.93	0.60	673	3.10	1.86	0.60	710	3.02	1.81	0.60	733	2.93	1.76	0.60	770
30	26	3.31	1.59	0.48	710	3.22	1.54	0.48	747	3.17	1.52	0.48	770	3.07	1.47	0.48	792
31	18	2.82	2.82	1.00	592	2.70	2.70	1.00	622	2.59	2.59	1.00	651	2.50	2.50	1.00	681
31	20	2.94	2.59	0.88	622	2.82	2.48	0.88	659	2.74	2.41	0.88	673	2.64	2.32	0.88	703
31	22	3.06	2.33	0.76	644	2.95	2.24	0.76	685	2.88	2.19	0.76	703	2.76	2.10	0.76	733
31	24	3.22	2.06	0.64	673	3.10	1.98	0.64	710	3.02	1.94	0.64	733	2.93	1.87	0.64	770
31	26	3.31	1.72	0.52	710	3.22	1.67	0.52	747	3.17	1.65	0.52	770	3.07	1.60	0.52	792
32	18	2.82	2.93	1.04	592	2.70	2.81	1.04	622	2.59	2.70	1.04	651	2.50	2.60	1.04	681
32	20	2.94	2.70	0.92	622	2.82	2.59	0.92	659	2.74	2.52	0.92	673	2.64	2.43	0.92	703
32	22	3.06	2.45	0.80	644	2.95	2.36	0.80	685	2.88	2.30	0.80	703	2.76	2.21	0.80	733
32	24	3.22	2.19	0.68	673	3.10	2.11	0.68	710	3.02	2.06	0.68	733	2.93	1.99	0.68	770
32	26	3.31	1.85	0.56	710	3.22	1.80	0.56	747	3.17	1.77	0.56	770	3.07	1.72	0.56	792

NOTE Q : Total capacity (kW) SHF : Sensible heat factor DB : Dry-bulb temperature
SHC : Sensible heat capacity (kW) INPUT : Total power input (W) WB : Wet-bulb temperature

COOLING operation Rated frequency 57Hz
SEZ-A09CR / SUZ-A09VR
CAPACITY : 2.4(kW) INPUT : 740(W) SHF : 0.78

		OUTDOOR D.B.(℃)											
INDOOR	INDOOR	35				40				46			
D.B.(℃)	W.B.(℃)	Q	SHC	SHF	INPUT	Q	SHC	SHF	INPUT	Q	SHC	SHF	INPUT
21	18	2.35	1.41	0.60	725	2.16	1.30	0.60	770	1.99	1.20	0.60	799
21	20	2.47	1.19	0.48	755	2.30	1.11	0.48	792	2.14	1.03	0.48	836
22	18	2.35	1.51	0.64	725	2.16	1.38	0.64	770	1.99	1.27	0.64	799
22	20	2.47	1.29	0.52	755	2.30	1.20	0.52	792	2.14	1.11	0.52	836
22	22	2.62	1.05	0.40	784	2.45	0.98	0.40	829	2.28	0.91	0.40	858
23	18	2.35	1.60	0.68	725	2.16	1.47	0.68	770	1.99	1.35	0.68	799
23	20	2.47	1.38	0.56	755	2.30	1.29	0.56	792	2.14	1.20	0.56	836
23	22	2.62	1.15	0.44	784	2.45	1.08	0.44	829	2.28	1.00	0.44	858
24	18	2.35	1.69	0.72	725	2.16	1.56	0.72	770	1.99	1.43	0.72	799
24	20	2.47	1.48	0.60	755	2.30	1.38	0.60	792	2.14	1.28	0.60	836
24	22	2.62	1.26	0.48	784	2.45	1.18	0.48	829	2.28	1.09	0.48	858
24	24	2.76	0.99	0.36	814	2.59	0.93	0.36	851	2.45	0.88	0.36	888
25	20	2.47	1.58	0.64	755	2.30	1.47	0.64	792	2.14	1.37	0.64	836
25	22	2.62	1.36	0.52	784	2.45	1.27	0.52	829	2.28	1.19	0.52	858
25	24	2.76	1.10	0.40	814	2.59	1.04	0.40	851	2.45	0.98	0.40	888
26	18	2.35	1.88	0.80	725	2.16	1.73	0.80	770	1.99	1.59	0.80	799
26	20	2.47	1.68	0.68	755	2.30	1.57	0.68	792	2.14	1.45	0.68	836
26	22	2.62	1.46	0.56	784	2.45	1.37	0.56	829	2.28	1.28	0.56	858
26	24	2.76	1.21	0.44	814	2.59	1.14	0.44	851	2.45	1.08	0.44	888
26	26	2.90	0.93	0.32	844	2.74	0.88	0.32	881	2.57	0.82	0.32	918
27	18	2.35	1.98	0.84	725	2.16	1.81	0.84	770	1.99	1.67	0.84	799
27	20	2.47	1.78	0.72	755	2.30	1.66	0.72	792	2.14	1.54	0.72	836
27	22	2.62	1.57	0.60	784	2.45	1.47	0.60	829	2.28	1.37	0.60	858
27	24	2.76	1.32	0.48	814	2.59	1.24	0.48	851	2.45	1.18	0.48	888
27	26	2.90	1.05	0.36	844	2.74	0.98	0.36	881	2.57	0.92	0.36	918
28	18	2.35	2.07	0.88	725	2.16	1.90	0.88	770	1.99	1.75	0.88	799
28	20	2.47	1.88	0.76	755	2.30	1.75	0.76	792	2.14	1.62	0.76	836
28	22	2.62	1.67	0.64	784	2.45	1.57	0.64	829	2.28	1.46	0.64	858
28	24	2.76	1.44	0.52	814	2.59	1.35	0.52	851	2.45	1.27	0.52	888
28	26	2.90	1.16	0.40	844	2.74	1.09	0.40	881	2.57	1.03	0.40	918
29	18	2.35	2.16	0.92	725	2.16	1.99	0.92	770	1.99	1.83	0.92	799
29	20	2.47	1.98	0.80	755	2.30	1.84	0.80	792	2.14	1.71	0.80	836
29	22	2.62	1.78	0.68	784	2.45	1.66	0.68	829	2.28	1.55	0.68	858
29	24	2.76	1.55	0.56	814	2.59	1.45	0.56	851	2.45	1.37	0.56	888
29	26	2.90	1.28	0.44	844	2.74	1.20	0.44	881	2.57	1.13	0.44	918
30	18	2.35	2.26	0.96	725	2.16	2.07	0.96	770	1.99	1.91	0.96	799
30	20	2.47	2.08	0.84	755	2.30	1.94	0.84	792	2.14	1.79	0.84	836
30	22	2.62	1.88	0.72	784	2.45	1.76	0.72	829	2.28	1.64	0.72	858
30	24	2.76	1.66	0.60	814	2.59	1.56	0.60	851	2.45	1.47	0.60	888
30	26	2.90	1.39	0.48	844	2.74	1.31	0.48	881	2.57	1.23	0.48	918
31	18	2.35	2.35	1.00	725	2.16	2.16	1.00	770	1.99	1.99	1.00	799
31	20	2.47	2.18	0.88	755	2.30	2.03	0.88	792	2.14	1.88	0.88	836
31	22	2.62	1.99	0.76	784	2.45	1.86	0.76	829	2.28	1.73	0.76	858
31	24	2.76	1.77	0.64	814	2.59	1.66	0.64	851	2.45	1.57	0.64	888
31	26	2.90	1.51	0.52	844	2.74	1.42	0.52	881	2.57	1.34	0.52	918
32	18	2.35	2.45	1.04	725	2.16	2.25	1.04	770	1.99	2.07	1.04	799
32	20	2.47	2.27	0.92	755	2.30	2.12	0.92	792	2.14	1.97	0.92	836
32	22	2.62	2.09	0.80	784	2.45	1.96	0.80	829	2.28	1.82	0.80	858
32	24	2.76	1.88	0.68	814	2.59	1.76	0.68	851	2.45	1.66	0.68	888
32	26	2.90	1.63	0.56	844	2.74	1.53	0.56	881	2.57	1.44	0.56	918

NOTE Q : Total capacity (kW) SHF : Sensible heat factor DB : Dry-bulb temperature
SHC : Sensible heat capacity (kW) INPUT : Total power input (W) WB : Wet-bulb temperature

COOLING operation Rated frequency 67Hz
SEZ-A12AR / SUZ-A12VR
CAPACITY : 3.4(kW) INPUT : 1090(W) SHF : 0.79

		OUTDOOR D.B.(℃)															
INDOOR	INDOOR	21				25				27				30			
D.B.(℃)	W.B.(℃)	Q	SHC	SHF	INPUT	Q	SHC	SHF	INPUT	Q	SHC	SHF	INPUT	Q	SHC	SHF	INPUT
21	18	4.00	2.44	0.61	872	3.83	2.33	0.61	916	3.67	0.61	0.61	959	3.54	2.16	0.61	1003
21	20	4.17	2.04	0.49	916	4.00	1.96	0.49	970	3.88	0.49	0.49	992	3.74	1.83	0.49	1036
22	18	4.00	2.60	0.65	872	3.83	2.49	0.65	916	3.67	0.65	0.65	959	3.54	2.30	0.65	1003
22	20	4.17	2.21	0.53	916	4.00	2.12	0.53	970	3.88	0.53	0.53	992	3.74	1.98	0.53	1036
22	22	4.34	1.78	0.41	948	4.18	1.71	0.41	1008	4.08	0.41	0.41	1036	3.91	1.60	0.41	1079
23	18	4.00	2.76	0.69	872	3.83	2.64	0.69	916	3.67	0.69	0.69	959	3.54	2.44	0.69	1003
23	20	4.17	2.37	0.57	916	4.00	2.28	0.57	970	3.88	0.57	0.57	992	3.74	2.13	0.57	1036
23	22	4.34	1.95	0.45	948	4.18	1.88	0.45	1008	4.08	0.45	0.45	1036	3.91	1.76	0.45	1079
24	18	4.00	2.92	0.73	872	3.83	2.79	0.73	916	3.67	0.73	0.73	959	3.54	2.58	0.73	1003
24	20	4.17	2.54	0.61	916	4.00	2.44	0.61	970	3.88	0.61	0.61	992	3.74	2.28	0.61	1036
24	22	4.34	2.12	0.49	948	4.18	2.05	0.49	1008	4.08	0.49	0.49	1036	3.91	1.92	0.49	1079
24	24	4.56	1.69	0.37	992	4.39	1.62	0.37	1046	4.28	0.37	0.37	1079	4.15	1.53	0.37	1134
25	20	4.17	2.71	0.65	916	4.00	2.60	0.65	970	3.88	0.65	0.65	992	3.74	2.43	0.65	1036
25	22	4.34	2.30	0.53	948	4.18	2.22	0.53	1008	4.08	0.53	0.53	1036	3.91	2.07	0.53	1079
25	24	4.56	1.87	0.41	992	4.39	1.80	0.41	1046	4.28	0.41	0.41	1079	4.15	1.70	0.41	1134
26	18	4.00	3.24	0.81	872	3.83	3.10	0.81	916	3.67	0.81	0.81	959	3.54	2.86	0.81	1003
26	20	4.17	2.87	0.69	916	4.00	2.76	0.69	970	3.88	0.69	0.69	992	3.74	2.58	0.69	1036
26	22	4.34	2.47	0.57	948	4.18	2.38	0.57	1008	4.08	0.57	0.57	1036	3.91	2.23	0.57	1079
26	24	4.56	2.05	0.45	992	4.39	1.97	0.45	1046	4.28	0.45	0.45	1079	4.15	1.87	0.45	1134
26	26	4.69	1.55	0.33	1046	4.56	1.50	0.33	1101	4.49	0.33	0.33	1134	4.35	1.44	0.33	1166
27	18	4.00	3.40	0.85	872	3.83	3.25	0.85	916	3.67	0.85	0.85	959	3.54	3.01	0.85	1003
27	20	4.17	3.04	0.73	916	4.00	2.92	0.73	970	3.88	0.73	0.73	992	3.74	2.73	0.73	1036
27	22	4.34	2.64	0.61	948	4.18	2.55	0.61	1008	4.08	0.61	0.61	1036	3.91	2.39	0.61	1079
27	24	4.56	2.23	0.49	992	4.39	2.15	0.49	1046	4.28	0.49	0.49	1079	4.15	2.03	0.49	1134
27	26	4.69	1.74	0.37	1046	4.56	1.69	0.37	1101	4.49	0.37	0.37	1134	4.35	1.61	0.37	1166
28	18	4.00	3.56	0.89	872	3.83	3.40	0.89	916	3.67	0.89	0.89	959	3.54	3.15	0.89	1003
28	20	4.17	3.21	0.77	916	4.00	3.08	0.77	970	3.88	0.77	0.77	992	3.74	2.88	0.77	1036
28	22	4.34	2.82	0.65	948	4.18	2.72	0.65	1008	4.08	0.65	0.65	1036	3.91	2.54	0.65	1079
28	24	4.56	2.41	0.53	992	4.39	2.32	0.53	1046	4.28	0.53	0.53	1079	4.15	2.20	0.53	1134
28	26	4.69	1.92	0.41	1046	4.56	1.87	0.41	1101	4.49	0.41	0.41	1134	4.35	1.78	0.41	1166
29	18	4.00	3.72	0.93	872	3.83	3.56	0.93	916	3.67	0.93	0.93	959	3.54	3.29	0.93	1003
29	20	4.17	3.37	0.81	916	4.00	3.24	0.81	970	3.88	0.81	0.81	992	3.74	3.03	0.81	1036
29	22	4.34	2.99	0.69	948	4.18	2.89	0.69	1008	4.08	0.69	0.69	1036	3.91	2.70	0.69	1079
29	24	4.56	2.60	0.57	992	4.39	2.50	0.57	1046	4.28	0.57	0.57	1079	4.15	2.36	0.57	1134
29	26	4.69	2.11	0.45	1046	4.56	2.05	0.45	1101	4.49	0.45	0.45	1134	4.35	1.96	0.45	1166
30	18	4.00	3.88	0.97	872	3.83	3.71	0.97	916	3.67	0.97	0.97	959	3.54	3.43	0.97	1003
30	20	4.17	3.54	0.85	916	4.00	3.40	0.85	970	3.88	0.85	0.85	992	3.74	3.18	0.85	1036
30	22	4.34	3.16	0.73	948	4.18	3.05	0.73	1008	4.08	0.73	0.73	1036	3.91	2.85	0.73	1079
30	24	4.56	2.78	0.61	992	4.39	2.68	0.61	1046	4.28	0.61	0.61	1079	4.15	2.53	0.61	1134
30	26	4.69	2.30	0.49	1046	4.56	2.23	0.49	1101	4.49	0.49	0.49	1134	4.35	2.13	0.49	1166
31	18	4.00	4.03	1.01	872	3.83	3.86	1.01	916	3.67	1.01	1.01	959	3.54	3.57	1.01	1003
31	20	4.17	3.71	0.89	916	4.00	3.56	0.89	970	3.88	0.89	0.89	992	3.74	3.33	0.89	1036
31	22	4.34	3.34	0.77	948	4.18	3.22	0.77	1008	4.08	0.77	0.77	1036	3.91	3.01	0.77	1079
31	24	4.56	2.96	0.65	992	4.39	2.85	0.65	1046	4.28	0.65	0.65	1079	4.15	2.70	0.65	1134
31	26	4.69	2.49	0.53	1046	4.56	2.41	0.53	1101	4.49	0.53	0.53	1134	4.35	2.31	0.53	1166
32	18	4.00	4.19	1.05	872	3.83	4.02	1.05	916	3.67	1.05	1.05	959	3.54	3.71	1.05	1003
32	20	4.17	3.87	0.93	916	4.00	3.72	0.93	970	3.88	0.93	0.93	992	3.74	3.48	0.93	1036
32	22	4.34	3.51	0.81	948	4.18	3.39	0.81	1008	4.08	0.81	0.81	1036	3.91	3.17	0.81	1079
32	24	4.56	3.14	0.69	992	4.39	3.03	0.69	1046	4.28	0.69	0.69	1079	4.15	2.86	0.69	1134
32	26	4.69	2.67	0.57	1046	4.56	2.60	0.57	1101	4.49	0.57	0.57	1134	4.35	2.48	0.57	1166

NOTE Q : Total capacity (kW) SHF : Sensible heat factor DB : Dry-bulb temperature
SHC : Sensible heat capacity (kW) INPUT : Total power input (W) WB : Wet-bulb temperature

COOLING operation Rated frequency 67Hz
SEZ-A12AR / SUZ-A12VR
CAPACITY : 3.4(kW) INPUT : 1090(W) SHF : 0.79

		OUTDOOR D.B.(℃)											
INDOOR	INDOOR	35				40				46			
D.B.(℃)	W.B.(℃)	Q	SHC	SHF	INPUT	Q	SHC	SHF	INPUT	Q	SHC	SHF	INPUT
21	18	3.33	2.03	0.61	1068	3.06	1.87	0.61	1134	2.82	1.72	0.61	1177
21	20	3.50	1.72	0.49	1112	3.26	1.60	0.49	1166	3.03	1.48	0.49	1232
22	18	3.33	2.17	0.65	1068	3.06	1.99	0.65	1134	2.82	1.83	0.65	1177
22	20	3.50	1.86	0.53	1112	3.26	1.73	0.53	1166	3.03	1.60	0.53	1232
22	22	3.71	1.52	0.41	1155	3.47	1.42	0.41	1221	3.23	1.32	0.41	1264
23	18	3.33	2.30	0.69	1068	3.06	2.11	0.69	1134	2.82	1.95	0.69	1177
23	20	3.50	2.00	0.57	1112	3.26	1.86	0.57	1166	3.03	1.72	0.57	1232
23	22	3.71	1.67	0.45	1155	3.47	1.56	0.45	1221	3.23	1.45	0.45	1264
24	18	3.33	2.43	0.73	1068	3.06	2.23	0.73	1134	2.82	2.06	0.73	1177
24	20	3.50	2.14	0.61	1112	3.26	1.99	0.61	1166	3.03	1.85	0.61	1232
24	22	3.71	1.82	0.49	1155	3.47	1.70	0.49	1221	3.23	1.58	0.49	1264
24	24	3.91	1.45	0.37	1199	3.67	1.36	0.37	1254	3.47	1.28	0.37	1308
25	20	3.50	2.28	0.65	1112	3.26	2.12	0.65	1166	3.03	1.97	0.65	1232
25	22	3.71	1.96	0.53	1155	3.47	1.84	0.53	1221	3.23	1.71	0.53	1264
25	24	3.91	1.60	0.41	1199	3.67	1.51	0.41	1254	3.47	1.42	0.41	1308
26	18	3.33	2.70	0.81	1068	3.06	2.48	0.81	1134	2.82	2.29	0.81	1177
26	20	3.50	2.42	0.69	1112	3.26	2.25	0.69	1166	3.03	2.09	0.69	1232
26	22	3.71	2.11	0.57	1155	3.47	1.98	0.57	1221	3.23	1.84	0.57	1264
26	24	3.91	1.76	0.45	1199	3.67	1.65	0.45	1254	3.47	1.56	0.45	1308
26	26	4.11	1.36	0.33	1243	3.88	1.28	0.33	1297	3.64	1.20	0.33	1352
27	18	3.33	2.83	0.85	1068	3.06	2.60	0.85	1134	2.82	2.40	0.85	1177
27	20	3.50	2.56	0.73	1112	3.26	2.38	0.73	1166	3.03	2.21	0.73	1232
27	22	3.71	2.26	0.61	1155	3.47	2.12	0.61	1221	3.23	1.97	0.61	1264
27	24	3.91	1.92	0.49	1199	3.67	1.80	0.49	1254	3.47	1.70	0.49	1308
27	26	4.11	1.52	0.37	1243	3.88	1.43	0.37	1297	3.64	1.35	0.37	1352
28	18	3.33	2.97	0.89	1068	3.06	2.72	0.89	1134	2.82	2.51	0.89	1177
28	20	3.50	2.70	0.77	1112	3.26	2.51	0.77	1166	3.03	2.33	0.77	1232
28	22	3.71	2.41	0.65	1155	3.47	2.25	0.65	1221	3.23	2.10	0.65	1264
28	24	3.91	2.07	0.53	1199	3.67	1.95	0.53	1254	3.47	1.84	0.53	1308
28	26	4.11	1.69	0.41	1243	3.88	1.59	0.41	1297	3.64	1.49	0.41	1352
29	18	3.33	3.10	0.93	1068	3.06	2.85	0.93	1134	2.82	2.62	0.93	1177
29	20	3.50	2.84	0.81	1112	3.26	2.64	0.81	1166	3.03	2.45	0.81	1232
29	22	3.71	2.56	0.69	1155	3.47	2.39	0.69	1221	3.23	2.23	0.69	1264
29	24	3.91	2.23	0.57	1199	3.67	2.09	0.57	1254	3.47	1.98	0.57	1308
29	26	4.11	1.85	0.45	1243	3.88	1.74	0.45	1297	3.64	1.64	0.45	1352
30	18	3.33	3.23	0.97	1068	3.06	2.97	0.97	1134	2.82	2.74	0.97	1177
30	20	3.50	2.98	0.85	1112	3.26	2.77	0.85	1166	3.03	2.57	0.85	1232
30	22	3.71	2.71	0.73	1155	3.47	2.53	0.73	1221	3.23	2.36	0.73	1264
30	24	3.91	2.39	0.61	1199	3.67	2.24	0.61	1254	3.47	2.12	0.61	1308
30	26	4.11	2.02	0.49	1243	3.88	1.90	0.49	1297	3.64	1.78	0.49	1352
31	18	3.33	3.37	1.01	1068	3.06	3.09	1.01	1134	2.82	2.85	1.01	1177
31	20	3.50	3.12	0.89	1112	3.26	2.90	0.89	1166	3.03	2.69	0.89	1232
31	22	3.71	2.85	0.77	1155	3.47	2.67	0.77	1221	3.23	2.49	0.77	1264
31	24	3.91	2.54	0.65	1199	3.67	2.39	0.65	1254	3.47	2.25	0.65	1308
31	26	4.11	2.18	0.53	1243	3.88	2.05	0.53	1297	3.64	1.93	0.53	1352
32	18	3.33	3.50	1.05	1068	3.06	3.21	1.05	1134	2.82	2.96	1.05	1177
32	20	3.50	3.26	0.93	1112	3.26	3.04	0.93	1166	3.03	2.81	0.93	1232
32	22	3.71	3.00	0.81	1155	3.47	2.81	0.81	1221	3.23	2.62	0.81	1264
32	24	3.91	2.70	0.69	1199	3.67	2.53	0.69	1254	3.47	2.39	0.69	1308
32	26	4.11	2.34	0.57	1243	3.88	2.21	0.57	1297	3.64	2.07	0.57	1352

NOTE Q : Total capacity (kW) SHF : Sensible heat factor DB : Dry-bulb temperature
SHC : Sensible heat capacity (kW) INPUT : Total power input (W) WB : Wet-bulb temperature

COOLING operation Rated frequency 80Hz
SEZ-A18AR / SUZ-A18VR
CAPACITY : 5.0(kW) INPUT : 1780(W) SHF : 0.75

		OUTDOOR D.B.(℃)															
INDOOR	INDOOR	21				25				27				30			
D.B.(℃)	W.B.(℃)	Q	SHC	SHF	INPUT	Q	SHC	SHF	INPUT	Q	SHC	SHF	INPUT	Q	SHC	SHF	INPUT
21	18	5.88	3.35	0.57	1424	5.63	3.21	0.57	1495	5.40	3.08	0.57	1566	5.20	2.96	0.57	1638
21	20	6.13	2.76	0.45	1495	5.88	2.64	0.45	1584	5.70	2.57	0.45	1620	5.50	2.48	0.45	1691
22	18	5.88	3.58	0.61	1424	5.63	3.43	0.61	1495	5.40	3.29	0.61	1566	5.20	3.17	0.61	1638
22	20	6.13	3.00	0.49	1495	5.88	2.88	0.49	1584	5.70	2.79	0.49	1620	5.50	2.70	0.49	1691
22	22	6.38	2.36	0.37	1549	6.15	2.28	0.37	1647	6.00	2.22	0.37	1691	5.75	2.13	0.37	1762
23	18	5.88	3.82	0.65	1424	5.63	3.66	0.65	1495	5.40	3.51	0.65	1566	5.20	3.38	0.65	1638
23	20	6.13	3.25	0.53	1495	5.88	3.11	0.53	1584	5.70	3.02	0.53	1620	5.50	2.92	0.53	1691
23	22	6.38	2.61	0.41	1549	6.15	2.52	0.41	1647	6.00	2.46	0.41	1691	5.75	2.36	0.41	1762
24	18	5.88	4.05	0.69	1424	5.63	3.88	0.69	1495	5.40	3.73	0.69	1566	5.20	3.59	0.69	1638
24	20	6.13	3.49	0.57	1495	5.88	3.35	0.57	1584	5.70	3.25	0.57	1620	5.50	3.14	0.57	1691
24	22	6.38	2.87	0.45	1549	6.15	2.77	0.45	1647	6.00	2.70	0.45	1691	5.75	2.59	0.45	1762
24	24	6.70	2.21	0.33	1620	6.45	2.13	0.33	1709	6.30	2.08	0.33	1762	6.10	2.01	0.33	1851
25	20	6.13	3.74	0.61	1495	5.88	3.58	0.61	1584	5.70	3.48	0.61	1620	5.50	3.36	0.61	1691
25	22	6.38	3.12	0.49	1549	6.15	3.01	0.49	1647	6.00	2.94	0.49	1691	5.75	2.82	0.49	1762
25	24	6.70	2.48	0.37	1620	6.45	2.39	0.37	1709	6.30	2.33	0.37	1762	6.10	2.26	0.37	1851
26	18	5.88	4.52	0.77	1424	5.63	4.33	0.77	1495	5.40	4.16	0.77	1566	5.20	4.00	0.77	1638
26	20	6.13	3.98	0.65	1495	5.88	3.82	0.65	1584	5.70	3.71	0.65	1620	5.50	3.58	0.65	1691
26	22	6.38	3.38	0.53	1549	6.15	3.26	0.53	1647	6.00	3.18	0.53	1691	5.75	3.05	0.53	1762
26	24	6.70	2.75	0.41	1620	6.45	2.64	0.41	1709	6.30	2.58	0.41	1762	6.10	2.50	0.41	1851
26	26	6.90	2.00	0.29	1709	6.70	1.94	0.29	1798	6.60	1.91	0.29	1851	6.40	1.86	0.29	1905
27	18	5.88	4.76	0.81	1424	5.63	4.56	0.81	1495	5.40	4.37	0.81	1566	5.20	4.21	0.81	1638
27	20	6.13	4.23	0.69	1495	5.88	4.05	0.69	1584	5.70	3.93	0.69	1620	5.50	3.80	0.69	1691
27	22	6.38	3.63	0.57	1549	6.15	3.51	0.57	1647	6.00	3.42	0.57	1691	5.75	3.28	0.57	1762
27	24	6.70	3.02	0.45	1620	6.45	2.90	0.45	1709	6.30	2.84	0.45	1762	6.10	2.75	0.45	1851
27	26	6.90	2.28	0.33	1709	6.70	2.21	0.33	1798	6.60	2.18	0.33	1851	6.40	2.11	0.33	1905
28	18	5.88	4.99	0.85	1424	5.63	4.78	0.85	1495	5.40	4.59	0.85	1566	5.20	4.42	0.85	1638
28	20	6.13	4.47	0.73	1495	5.88	4.29	0.73	1584	5.70	4.16	0.73	1620	5.50	4.02	0.73	1691
28	22	6.38	3.89	0.61	1549	6.15	3.75	0.61	1647	6.00	3.66	0.61	1691	5.75	3.51	0.61	1762
28	24	6.70	3.28	0.49	1620	6.45	3.16	0.49	1709	6.30	3.09	0.49	1762	6.10	2.99	0.49	1851
28	26	6.90	2.55	0.37	1709	6.70	2.48	0.37	1798	6.60	2.44	0.37	1851	6.40	2.37	0.37	1905
29	18	5.88	5.23	0.89	1424	5.63	5.01	0.89	1495	5.40	4.81	0.89	1566	5.20	4.63	0.89	1638
29	20	6.13	4.72	0.77	1495	5.88	4.52	0.77	1584	5.70	4.39	0.77	1620	5.50	4.24	0.77	1691
29	22	6.38	4.14	0.65	1549	6.15	4.00	0.65	1647	6.00	3.90	0.65	1691	5.75	3.74	0.65	1762
29	24	6.70	3.55	0.53	1620	6.45	3.42	0.53	1709	6.30	3.34	0.53	1762	6.10	3.23	0.53	1851
29	26	6.90	2.83	0.41	1709	6.70	2.75	0.41	1798	6.60	2.71	0.41	1851	6.40	2.62	0.41	1905
30	18	5.88	5.46	0.93	1424	5.63	5.23	0.93	1495	5.40	5.02	0.93	1566	5.20	4.84	0.93	1638
30	20	6.13	4.96	0.81	1495	5.88	4.76	0.81	1584	5.70	4.62	0.81	1620	5.50	4.46	0.81	1691
30	22	6.38	4.40	0.69	1549	6.15	4.24	0.69	1647	6.00	4.14	0.69	1691	5.75	3.97	0.69	1762
30	24	6.70	3.82	0.57	1620	6.45	3.68	0.57	1709	6.30	3.59	0.57	1762	6.10	3.48	0.57	1851
30	26	6.90	3.11	0.45	1709	6.70	3.02	0.45	1798	6.60	2.97	0.45	1851	6.40	2.88	0.45	1905
31	18	5.88	5.70	0.97	1424	5.63	5.46	0.97	1495	5.40	5.24	0.97	1566	5.20	5.04	0.97	1638
31	20	6.13	5.21	0.85	1495	5.88	4.99	0.85	1584	5.70	4.85	0.85	1620	5.50	4.68	0.85	1691
31	22	6.38	4.65	0.73	1549	6.15	4.49	0.73	1647	6.00	4.38	0.73	1691	5.75	4.20	0.73	1762
31	24	6.70	4.09	0.61	1620	6.45	3.93	0.61	1709	6.30	3.84	0.61	1762	6.10	3.72	0.61	1851
31	26	6.90	3.38	0.49	1709	6.70	3.28	0.49	1798	6.60	3.23	0.49	1851	6.40	3.14	0.49	1905
32	18	5.88	5.93	1.01	1424	5.63	5.68	1.01	1495	5.40	5.45	1.01	1566	5.20	5.25	1.01	1638
32	20	6.13	5.45	0.89	1495	5.88	5.23	0.89	1584	5.70	5.07	0.89	1620	5.50	4.90	0.89	1691
32	22	6.38	4.91	0.77	1549	6.15	4.74	0.77	1647	6.00	4.62	0.77	1691	5.75	4.43	0.77	1762
32	24	6.70	4.36	0.65	1620	6.45	4.19	0.65	1709	6.30	4.10	0.65	1762	6.10	3.97	0.65	1851
32	26	6.90	3.66	0.53	1709	6.70	3.55	0.53	1798	6.60	3.50	0.53	1851	6.40	3.39	0.53	1905

NOTE Q : Total capacity (kW) SHF : Sensible heat factor DB : Dry-bulb temperature
SHC : Sensible heat capacity (kW) INPUT : Total power input (W) WB : Wet-bulb temperature

COOLING operation Rated frequency 80Hz
SEZ-A18AR / SUZ-A18VR
CAPACITY : 5.0(kW) INPUT : 1780(W) SHF : 0.75

		OUTDOOR D.B.(℃)											
INDOOR	INDOOR	35				40				46			
D.B.(℃)	W.B.(℃)	Q	SHC	SHF	INPUT	Q	SHC	SHF	INPUT	Q	SHC	SHF	INPUT
21	18	4.90	2.79	0.57	1744	4.50	2.57	0.57	1851	4.15	2.37	0.57	1922
21	20	5.15	2.32	0.45	1816	4.80	2.16	0.45	1905	4.45	2.00	0.45	2011
22	18	4.90	2.99	0.61	1744	4.50	2.75	0.61	1851	4.15	2.53	0.61	1922
22	20	5.15	2.52	0.49	1816	4.80	2.35	0.49	1905	4.45	2.18	0.49	2011
22	22	5.45	2.02	0.37	1887	5.10	1.89	0.37	1994	4.75	1.76	0.37	2065
23	18	4.90	3.19	0.65	1744	4.50	2.93	0.65	1851	4.15	2.70	0.65	1922
23	20	5.15	2.73	0.53	1816	4.80	2.54	0.53	1905	4.45	2.36	0.53	2011
23	22	5.45	2.23	0.41	1887	5.10	2.09	0.41	1994	4.75	1.95	0.41	2065
24	18	4.90	3.38	0.69	1744	4.50	3.11	0.69	1851	4.15	2.86	0.69	1922
24	20	5.15	2.94	0.57	1816	4.80	2.74	0.57	1905	4.45	2.54	0.57	2011
24	22	5.45	2.45	0.45	1887	5.10	2.30	0.45	1994	4.75	2.14	0.45	2065
24	24	5.75	1.90	0.33	1958	5.40	1.78	0.33	2047	5.10	1.68	0.33	2136
25	20	5.15	3.14	0.61	1816	4.80	2.93	0.61	1905	4.45	2.71	0.61	2011
25	22	5.45	2.67	0.49	1887	5.10	2.50	0.49	1994	4.75	2.33	0.49	2065
25	24	5.75	2.13	0.37	1958	5.40	2.00	0.37	2047	5.10	1.89	0.37	2136
26	18	4.90	3.77	0.77	1744	4.50	3.47	0.77	1851	4.15	3.20	0.77	1922
26	20	5.15	3.35	0.65	1816	4.80	3.12	0.65	1905	4.45	2.89	0.65	2011
26	22	5.45	2.89	0.53	1887	5.10	2.70	0.53	1994	4.75	2.52	0.53	2065
26	24	5.75	2.36	0.41	1958	5.40	2.21	0.41	2047	5.10	2.09	0.41	2136
26	26	6.05	1.75	0.29	2029	5.70	1.65	0.29	2118	5.35	1.55	0.29	2207
27	18	4.90	3.97	0.81	1744	4.50	3.65	0.81	1851	4.15	3.36	0.81	1922
27	20	5.15	3.55	0.69	1816	4.80	3.31	0.69	1905	4.45	3.07	0.69	2011
27	22	5.45	3.11	0.57	1887	5.10	2.91	0.57	1994	4.75	2.71	0.57	2065
27	24	5.75	2.59	0.45	1958	5.40	2.43	0.45	2047	5.10	2.30	0.45	2136
27	26	6.05	2.00	0.33	2029	5.70	1.88	0.33	2118	5.35	1.77	0.33	2207
28	18	4.90	4.17	0.85	1744	4.50	3.83	0.85	1851	4.15	3.53	0.85	1922
28	20	5.15	3.76	0.73	1816	4.80	3.50	0.73	1905	4.45	3.25	0.73	2011
28	22	5.45	3.32	0.61	1887	5.10	3.11	0.61	1994	4.75	2.90	0.61	2065
28	24	5.75	2.82	0.49	1958	5.40	2.65	0.49	2047	5.10	2.50	0.49	2136
28	26	6.05	2.24	0.37	2029	5.70	2.11	0.37	2118	5.35	1.98	0.37	2207
29	18	4.90	4.36	0.89	1744	4.50	4.01	0.89	1851	4.15	3.69	0.89	1922
29	20	5.15	3.97	0.77	1816	4.80	3.70	0.77	1905	4.45	3.43	0.77	2011
29	22	5.45	3.54	0.65	1887	5.10	3.32	0.65	1994	4.75	3.09	0.65	2065
29	24	5.75	3.05	0.53	1958	5.40	2.86	0.53	2047	5.10	2.70	0.53	2136
29	26	6.05	2.48	0.41	2029	5.70	2.34	0.41	2118	5.35	2.19	0.41	2207
30	18	4.90	4.56	0.93	1744	4.50	4.19	0.93	1851	4.15	3.86	0.93	1922
30	20	5.15	4.17	0.81	1816	4.80	3.89	0.81	1905	4.45	3.60	0.81	2011
30	22	5.45	3.76	0.69	1887	5.10	3.52	0.69	1994	4.75	3.28	0.69	2065
30	24	5.75	3.28	0.57	1958	5.40	3.08	0.57	2047	5.10	2.91	0.57	2136
30	26	6.05	2.72	0.45	2029	5.70	2.57	0.45	2118	5.35	2.41	0.45	2207
31	18	4.90	4.75	0.97	1744	4.50	4.37	0.97	1851	4.15	4.03	0.97	1922
31	20	5.15	4.38	0.85	1816	4.80	4.08	0.85	1905	4.45	3.78	0.85	2011
31	22	5.45	3.98	0.73	1887	5.10	3.72	0.73	1994	4.75	3.47	0.73	2065
31	24	5.75	3.51	0.61	1958	5.40	3.29	0.61	2047	5.10	3.11	0.61	2136
31	26	6.05	2.96	0.49	2029	5.70	2.79	0.49	2118	5.35	2.62	0.49	2207
32	18	4.90	4.95	1.01	1744	4.50	4.55	1.01	1851	4.15	4.19	1.01	1922
32	20	5.15	4.58	0.89	1816	4.80	4.27	0.89	1905	4.45	3.96	0.89	2011
32	22	5.45	4.20	0.77	1887	5.10	3.93	0.77	1994	4.75	3.66	0.77	2065
32	24	5.75	3.74	0.65	1958	5.40	3.51	0.65	2047	5.10	3.32	0.65	2136
32	26	6.05	3.21	0.53	2029	5.70	3.02	0.53	2118	5.35	2.84	0.53	2207

NOTE Q : Total capacity (kW) SHF : Sensible heat factor DB : Dry-bulb temperature
SHC : Sensible heat capacity (kW) INPUT : Total power input (W) WB : Wet-bulb temperature

COOLING operation Rated frequency 87Hz
SEZ-A24AR / SUZ-A24VR
CAPACITY : 5.5(kW) INPUT : 1960(W) SHF : 0.75

		OUTDOOR D.B.(℃)															
INDOOR	INDOOR	21				25				27				30			
D.B.(℃)	W.B.(℃)	Q	SHC	SHF	INPUT	Q	SHC	SHF	INPUT	Q	SHC	SHF	INPUT	Q	SHC	SHF	INPUT
21	18	6.46	3.68	0.57	1568	6.19	3.53	0.57	1646	5.94	3.39	0.57	1725	5.72	3.26	0.57	1803
21	20	6.74	3.03	0.45	1646	6.46	2.91	0.45	1744	6.27	2.82	0.45	1784	6.05	2.72	0.45	1862
22	18	6.46	3.94	0.61	1568	6.19	3.77	0.61	1646	5.94	3.62	0.61	1725	5.72	3.49	0.61	1803
22	20	6.74	3.30	0.49	1646	6.46	3.17	0.49	1744	6.27	3.07	0.49	1784	6.05	2.96	0.49	1862
22	22	7.01	2.59	0.37	1705	6.77	2.50	0.37	1813	6.60	2.44	0.37	1862	6.33	2.34	0.37	1940
23	18	6.46	4.20	0.65	1568	6.19	4.02	0.65	1646	5.94	3.86	0.65	1725	5.72	3.72	0.65	1803
23	20	6.74	3.57	0.53	1646	6.46	3.43	0.53	1744	6.27	3.32	0.53	1784	6.05	3.21	0.53	1862
23	22	7.01	2.88	0.41	1705	6.77	2.77	0.41	1813	6.60	2.71	0.41	1862	6.33	2.59	0.41	1940
24	18	6.46	4.46	0.69	1568	6.19	4.27	0.69	1646	5.94	4.10	0.69	1725	5.72	3.95	0.69	1803
24	20	6.74	3.84	0.57	1646	6.46	3.68	0.57	1744	6.27	3.57	0.57	1784	6.05	3.45	0.57	1862
24	22	7.01	3.16	0.45	1705	6.77	3.04	0.45	1813	6.60	2.97	0.45	1862	6.33	2.85	0.45	1940
24	24	7.37	2.43	0.33	1784	7.10	2.34	0.33	1882	6.93	2.29	0.33	1940	6.71	2.21	0.33	2038
25	20	6.74	4.11	0.61	1646	6.46	3.94	0.61	1744	6.27	3.82	0.61	1784	6.05	3.69	0.61	1862
25	22	7.01	3.44	0.49	1705	6.77	3.31	0.49	1813	6.60	3.23	0.49	1862	6.33	3.10	0.49	1940
25	24	7.37	2.73	0.37	1784	7.10	2.63	0.37	1882	6.93	2.56	0.37	1940	6.71	2.48	0.37	2038
26	18	6.46	4.98	0.77	1568	6.19	4.76	0.77	1646	5.94	4.57	0.77	1725	5.72	4.40	0.77	1803
26	20	6.74	4.38	0.65	1646	6.46	4.20	0.65	1744	6.27	4.08	0.65	1784	6.05	3.93	0.65	1862
26	22	7.01	3.72	0.53	1705	6.77	3.59	0.53	1813	6.60	3.50	0.53	1862	6.33	3.35	0.53	1940
26	24	7.37	3.02	0.41	1784	7.10	2.91	0.41	1882	6.93	2.84	0.41	1940	6.71	2.75	0.41	2038
26	26	7.59	2.20	0.29	1882	7.37	2.14	0.29	1980	7.26	2.11	0.29	2038	7.04	2.04	0.29	2097
27	18	6.46	5.23	0.81	1568	6.19	5.01	0.81	1646	5.94	4.81	0.81	1725	5.72	4.63	0.81	1803
27	20	6.74	4.65	0.69	1646	6.46	4.46	0.69	1744	6.27	4.33	0.69	1784	6.05	4.17	0.69	1862
27	22	7.01	4.00	0.57	1705	6.77	3.86	0.57	1813	6.60	3.76	0.57	1862	6.33	3.61	0.57	1940
27	24	7.37	3.32	0.45	1784	7.10	3.19	0.45	1882	6.93	3.12	0.45	1940	6.71	3.02	0.45	2038
27	26	7.59	2.50	0.33	1882	7.37	2.43	0.33	1980	7.26	2.40	0.33	2038	7.04	2.32	0.33	2097
28	18	6.46	5.49	0.85	1568	6.19	5.26	0.85	1646	5.94	5.05	0.85	1725	5.72	4.86	0.85	1803
28	20	6.74	4.92	0.73	1646	6.46	4.72	0.73	1744	6.27	4.58	0.73	1784	6.05	4.42	0.73	1862
28	22	7.01	4.28	0.61	1705	6.77	4.13	0.61	1813	6.60	4.03	0.61	1862	6.33	3.86	0.61	1940
28	24	7.37	3.61	0.49	1784	7.10	3.48	0.49	1882	6.93	3.40	0.49	1940	6.71	3.29	0.49	2038
28	26	7.59	2.81	0.37	1882	7.37	2.73	0.37	1980	7.26	2.69	0.37	2038	7.04	2.60	0.37	2097
29	18	6.46	5.75	0.89	1568	6.19	5.51	0.89	1646	5.94	5.29	0.89	1725	5.72	5.09	0.89	1803
29	20	6.74	5.19	0.77	1646	6.46	4.98	0.77	1744	6.27	4.83	0.77	1784	6.05	4.66	0.77	1862
29	22	7.01	4.56	0.65	1705	6.77	4.40	0.65	1813	6.60	4.29	0.65	1862	6.33	4.11	0.65	1940
29	24	7.37	3.91	0.53	1784	7.10	3.76	0.53	1882	6.93	3.67	0.53	1940	6.71	3.56	0.53	2038
29	26	7.59	3.11	0.41	1882	7.37	3.02	0.41	1980	7.26	2.98	0.41	2038	7.04	2.89	0.41	2097
30	18	6.46	6.01	0.93	1568	6.19	5.75	0.93	1646	5.94	5.52	0.93	1725	5.72	5.32	0.93	1803
30	20	6.74	5.46	0.81	1646	6.46	5.23	0.81	1744	6.27	5.08	0.81	1784	6.05	4.90	0.81	1862
30	22	7.01	4.84	0.69	1705	6.77	4.67	0.69	1813	6.60	4.55	0.69	1862	6.33	4.36	0.69	1940
30	24	7.37	4.20	0.57	1784	7.10	4.04	0.57	1882	6.93	3.95	0.57	1940	6.71	3.82	0.57	2038
30	26	7.59	3.42	0.45	1882	7.37	3.32	0.45	1980	7.26	3.27	0.45	2038	7.04	3.17	0.45	2097
31	18	6.46	6.27	0.97	1568	6.19	6.00	0.97	1646	5.94	5.76	0.97	1725	5.72	5.55	0.97	1803
31	20	6.74	5.73	0.85	1646	6.46	5.49	0.85	1744	6.27	5.33	0.85	1784	6.05	5.14	0.85	1862
31	22	7.01	5.12	0.73	1705	6.77	4.94	0.73	1813	6.60	4.82	0.73	1862	6.33	4.62	0.73	1940
31	24	7.37	4.50	0.61	1784	7.10	4.33	0.61	1882	6.93	4.23	0.61	1940	6.71	4.09	0.61	2038
31	26	7.59	3.72	0.49	1882	7.37	3.61	0.49	1980	7.26	3.56	0.49	2038	7.04	3.45	0.49	2097
32	18	6.46	6.53	1.01	1568	6.19	6.25	1.01	1646	5.94	6.00	1.01	1725	5.72	5.78	1.01	1803
32	20	6.74	6.00	0.89	1646	6.46	5.75	0.89	1744	6.27	5.58	0.89	1784	6.05	5.38	0.89	1862
32	22	7.01	5.40	0.77	1705	6.77	5.21	0.77	1813	6.60	5.08	0.77	1862	6.33	4.87	0.77	1940
32	24	7.37	4.79	0.65	1784	7.10	4.61	0.65	1882	6.93	4.50	0.65	1940	6.71	4.36	0.65	2038
32	26	7.59	4.02	0.53	1882	7.37	3.91	0.53	1980	7.26	3.85	0.53	2038	7.04	3.73	0.53	2097

NOTE Q : Total capacity (kW) SHF : Sensible heat factor DB : Dry-bulb temperature
SHC : Sensible heat capacity (kW) INPUT : Total power input (W) WB : Wet-bulb temperature

COOLING operation Rated frequency 87Hz
SEZ-A24AR / SUZ-A24VR
CAPACITY : 5.5(kW) INPUT : 1960(W) SHF : 0.75

		OUTDOOR D.B.(℃)											
INDOOR	INDOOR	35				40				46			
D.B.(℃)	W.B.(℃)	Q	SHC	SHF	INPUT	Q	SHC	SHF	INPUT	Q	SHC	SHF	INPUT
21	18	5.39	3.07	0.57	1921	4.95	2.82	0.57	2038	4.57	2.60	0.57	2117
21	20	5.67	2.55	0.45	1999	5.28	2.38	0.45	2097	4.90	2.20	0.45	2215
22	18	5.39	3.29	0.61	1921	4.95	3.02	0.61	2038	4.57	2.78	0.61	2117
22	20	5.67	2.78	0.49	1999	5.28	2.59	0.49	2097	4.90	2.40	0.49	2215
22	22	6.00	2.22	0.37	2078	5.61	2.08	0.37	2195	5.23	1.93	0.37	2274
23	18	5.39	3.50	0.65	1921	4.95	3.22	0.65	2038	4.57	2.97	0.65	2117
23	20	5.67	3.00	0.53	1999	5.28	2.80	0.53	2097	4.90	2.59	0.53	2215
23	22	6.00	2.46	0.41	2078	5.61	2.30	0.41	2195	5.23	2.14	0.41	2274
24	18	5.39	3.72	0.69	1921	4.95	3.42	0.69	2038	4.57	3.15	0.69	2117
24	20	5.67	3.23	0.57	1999	5.28	3.01	0.57	2097	4.90	2.79	0.57	2215
24	22	6.00	2.70	0.45	2078	5.61	2.52	0.45	2195	5.23	2.35	0.45	2274
24	24	6.33	2.09	0.33	2156	5.94	1.96	0.33	2254	5.61	1.85	0.33	2352
25	20	5.67	3.46	0.61	1999	5.28	3.22	0.61	2097	4.90	2.99	0.61	2215
25	22	6.00	2.94	0.49	2078	5.61	2.75	0.49	2195	5.23	2.56	0.49	2274
25	24	6.33	2.34	0.37	2156	5.94	2.20	0.37	2254	5.61	2.08	0.37	2352
26	18	5.39	4.15	0.77	1921	4.95	3.81	0.77	2038	4.57	3.52	0.77	2117
26	20	5.67	3.68	0.65	1999	5.28	3.43	0.65	2097	4.90	3.18	0.65	2215
26	22	6.00	3.18	0.53	2078	5.61	2.97	0.53	2195	5.23	2.77	0.53	2274
26	24	6.33	2.59	0.41	2156	5.94	2.44	0.41	2254	5.61	2.30	0.41	2352
26	26	6.66	1.93	0.29	2234	6.27	1.82	0.29	2332	5.89	1.71	0.29	2430
27	18	5.39	4.37	0.81	1921	4.95	4.01	0.81	2038	4.57	3.70	0.81	2117
27	20	5.67	3.91	0.69	1999	5.28	3.64	0.69	2097	4.90	3.38	0.69	2215
27	22	6.00	3.42	0.57	2078	5.61	3.20	0.57	2195	5.23	2.98	0.57	2274
27	24	6.33	2.85	0.45	2156	5.94	2.67	0.45	2254	5.61	2.52	0.45	2352
27	26	6.66	2.20	0.33	2234	6.27	2.07	0.33	2332	5.89	1.94	0.33	2430
28	18	5.39	4.58	0.85	1921	4.95	4.21	0.85	2038	4.57	3.88	0.85	2117
28	20	5.67	4.14	0.73	1999	5.28	3.85	0.73	2097	4.90	3.57	0.73	2215
28	22	6.00	3.66	0.61	2078	5.61	3.42	0.61	2195	5.23	3.19	0.61	2274
28	24	6.33	3.10	0.49	2156	5.94	2.91	0.49	2254	5.61	2.75	0.49	2352
28	26	6.66	2.46	0.37	2234	6.27	2.32	0.37	2332	5.89	2.18	0.37	2430
29	18	5.39	4.80	0.89	1921	4.95	4.41	0.89	2038	4.57	4.06	0.89	2117
29	20	5.67	4.36	0.77	1999	5.28	4.07	0.77	2097	4.90	3.77	0.77	2215
29	22	6.00	3.90	0.65	2078	5.61	3.65	0.65	2195	5.23	3.40	0.65	2274
29	24	6.33	3.35	0.53	2156	5.94	3.15	0.53	2254	5.61	2.97	0.53	2352
29	26	6.66	2.73	0.41	2234	6.27	2.57	0.41	2332	5.89	2.41	0.41	2430
30	18	5.39	5.01	0.93	1921	4.95	4.60	0.93	2038	4.57	4.25	0.93	2117
30	20	5.67	4.59	0.81	1999	5.28	4.28	0.81	2097	4.90	3.96	0.81	2215
30	22	6.00	4.14	0.69	2078	5.61	3.87	0.69	2195	5.23	3.61	0.69	2274
30	24	6.33	3.61	0.57	2156	5.94	3.39	0.57	2254	5.61	3.20	0.57	2352
30	26	6.66	2.99	0.45	2234	6.27	2.82	0.45	2332	5.89	2.65	0.45	2430
31	18	5.39	5.23	0.97	1921	4.95	4.80	0.97	2038	4.57	4.43	0.97	2117
31	20	5.67	4.82	0.85	1999	5.28	4.49	0.85	2097	4.90	4.16	0.85	2215
31	22	6.00	4.38	0.73	2078	5.61	4.10	0.73	2195	5.23	3.81	0.73	2274
31	24	6.33	3.86	0.61	2156	5.94	3.62	0.61	2254	5.61	3.42	0.61	2352
31	26	6.66	3.26	0.49	2234	6.27	3.07	0.49	2332	5.89	2.88	0.49	2430
32	18	5.39	5.44	1.01	1921	4.95	5.00	1.01	2038	4.57	4.61	1.01	2117
32	20	5.67	5.04	0.89	1999	5.28	4.70	0.89	2097	4.90	4.36	0.89	2215
32	22	6.00	4.62	0.77	2078	5.61	4.32	0.77	2195	5.23	4.02	0.77	2274
32	24	6.33	4.11	0.65	2156	5.94	3.86	0.65	2254	5.61	3.65	0.65	2352
32	26	6.66	3.53	0.53	2234	6.27	3.32	0.53	2332	5.89	3.12	0.53	2430

NOTE Q : Total capacity (kW) SHF : Sensible heat factor DB : Dry-bulb temperature
SHC : Sensible heat capacity (kW) INPUT : Total power input (W) WB : Wet-bulb temperature

HEATING OPERATION

SEZ-A09CR / SUZ-A09VR Rated frequency 75Hz

CAPACITY : 3.0(kW) INPUT : 880(W)

	OUTDOOR W.B.(℃)													
INDOOR	-10		-5		0		5		10		15		20	
D.B.(℃)	Q	INPUT	Q	INPUT	Q	INPUT	Q	INPUT	Q	INPUT	Q	INPUT	Q	INPUT
15	1.89	572	2.28	686	2.67	774	3.06	836	3.45	889	3.81	915	4.20	933
21	1.80	616	2.16	730	2.55	810	2.91	871	3.30	915	3.66	942	4.04	977
26	1.62	660	2.01	774	2.37	854	2.76	915	3.15	959	3.51	986	3.90	1012

SEZ-A12AR / SUZ-A12VR Rated frequency 76Hz

CAPACITY : 3.9(kW) INPUT : 1100(W)

	OUTDOOR W.B.(℃)													
INDOOR	-10		-5		0		5		10		15		20	
D.B.(℃)	Q	INPUT	Q	INPUT	Q	INPUT	Q	INPUT	Q	INPUT	Q	INPUT	Q	INPUT
15	2.46	715	2.96	858	3.47	968	3.98	1045	4.49	1111	4.95	1144	5.46	1166
21	2.34	770	2.81	913	3.32	1012	3.78	1089	4.29	1144	4.76	1177	5.25	1221
26	2.11	825	2.61	968	3.08	1067	3.59	1144	4.10	1199	4.56	1232	5.07	1265

SEZ-A18AR / SUZ-A18VR Rated frequency 80Hz

CAPACITY : 5.9(kW) INPUT : 1840(W)

	OUTDOOR W.B.(℃)													
INDOOR	-10		-5		0		5		10		15		20	
D.B.(℃)	Q	INPUT	Q	INPUT	Q	INPUT	Q	INPUT	Q	INPUT	Q	INPUT	Q	INPUT
15	3.72	1196	4.48	1435	5.25	1619	6.02	1748	6.79	1858	7.49	1914	8.26	1950
21	3.54	1288	4.25	1527	5.02	1693	5.72	1822	6.49	1914	7.20	1969	7.94	2042
26	3.19	1380	3.95	1619	4.66	1785	5.43	1914	6.20	2006	6.90	2061	7.67	2116

SEZ-A24AR / SUZ-A24VR Rated frequency 96Hz

CAPACITY : 6.9(kW) INPUT : 2450(W)

	OUTDOOR W.B.(℃)													
INDOOR	-10		-5		0		5		10		15		20	
D.B.(℃)	Q	INPUT	Q	INPUT	Q	INPUT	Q	INPUT	Q	INPUT	Q	INPUT	Q	INPUT
15	4.35	1593	5.24	1911	6.14	2156	7.04	2328	7.94	2475	8.76	2548	9.66	2597
21	4.14	1715	4.97	2034	5.87	2254	6.69	2426	7.59	2548	8.42	2622	9.28	2720
26	3.73	1838	4.62	2156	5.45	2377	6.35	2548	7.25	2671	8.07	2744	8.97	2818

B.2.6.2 PERFORMANCE CURVES

- **SEZ-A09CR / SUZ-A09VR**
- **SEZ-A12AR / SUZ-A12VR**
- **SEZ-A18AR / SUZ-A18VR**
- **SEZ-A24AR / SUZ-A24VR**

The standard data contained in these specifications apply only to the operation of the air conditioner under normal condition. Operating conditions vary according to the areas where these units are installed. The following information has been provided to clarify the operating characteristics of the air conditioner under the conditions indicated by the performance curve.

(1) GUARANTEED VOLTAGE

Rated voltage : ±10% (207~253V), 50Hz

(2) AIR FLOW

Air flow should be set at MAX.

(3) MAIN READINGS

COOLING
(1) Indoor intake air wet-bulb temperature : W.B.˚C
(2) Indoor outlet air wet-bulb temperature : W.B.˚C
(3) Outdoor intake air dry-bulb temperature : D.B.˚C
(4) Total input : W

HEATING
(1) Indoor intake air dry-bulb temperature : D.B.˚C
(2) Indoor outlet air dry-bulb temperature : D.B.˚C
(3) Outdoor intake air wet-bulb temperature : W.B.˚C
(4) Total input : W

Indoor air wet/dry-bulb temperature difference on the side of the chart on page shows the difference between the indoor intake air wet/dry-bulb temperature and the indoor outlet air wet/dry-bulb temperature for your reference at service.

How to measure the indoor air wet-bulb/dry-bulb temperature difference

1. Attach at least 2 sets of wet-and-dry-bulb thermometers to the indoor air inlet as shown in the figure, and at least 2 sets of wet-and-dry-bulb thermometers to the indoor air outlet. The thermometers must be attached to the position where air speed is high.
2. Attach at least 2 sets of wet-and-dry-bulb thermometers to the outdoor air inlet.
   Cover the thermometers to prevent direct rays of the sun.
3. Check that the air filter is cleaned.
4. Open windows and doors of the room.
5. Press the TEST button twice to start the COOL(HEAT) MODE.
6. When system stabilizes after more than 15 minutes, measure temperature and take an average temperature.
7. 10 minutes later, measure temperature again and check that the temperature does not change.

INDOOR UNIT

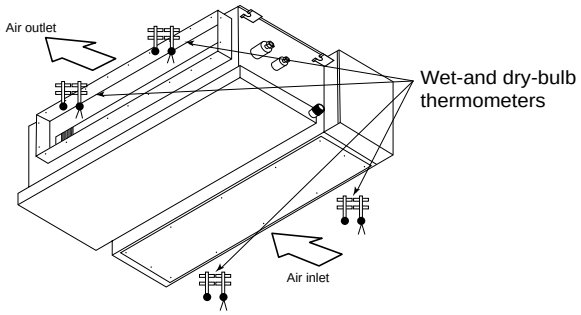

OUTDOOR UNIT

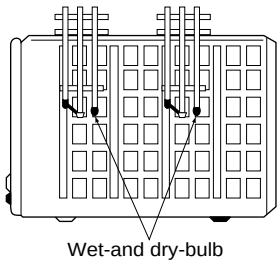

※ The picture is SEZ-A12,18, 24AR.
SEZ-A09CR is similar to SEZ-A12, 18, 24AR.

Indoor air Wet-bulb temperature difference (degree)	SUZ-A09VR Rated frequency 57Hz	SUZ-A12VR Rated frequency 67Hz	SUZ-A18VR Rated frequency 80Hz	SUZ-A24VR Rated frequency 87Hz
	7.9	7.8	8.4	8.6
	7.4	7.2	7.8	8.0
	6.8	6.7	7.2	7.4
	6.2	6.1	6.6	6.8
	5.7	5.6	6.0	6.2
	5.1	5.0	5.4	5.5

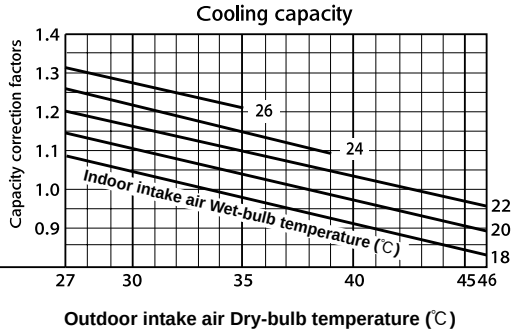

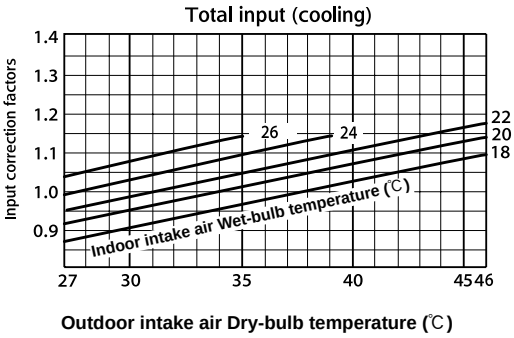

Indoor air Dry-bulb temperature difference (degree)	SUZ-A09VR Rated frequency 75Hz	SUZ-A12VR Rated frequency 76Hz	SUZ-A18VR Rated frequency 80Hz	SUZ-A24VR Rated frequency 96Hz
	25.2	22.1	24.5	25.3
	23.2	20.4	22.6	23.3
	21.3	18.7	20.7	21.4
	19.4	17.0	18.9	19.4
	17.4	15.3	17.0	17.5
	15.5	13.6	15.1	15.5
	13.6	11.9	13.2	13.6
	11.6	10.2	11.3	11.7

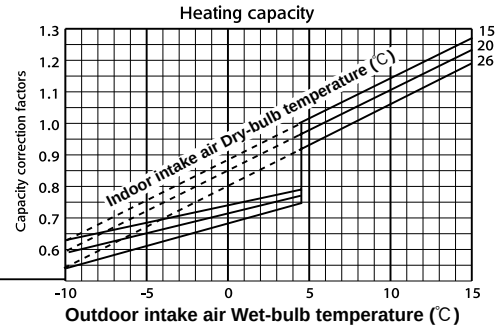

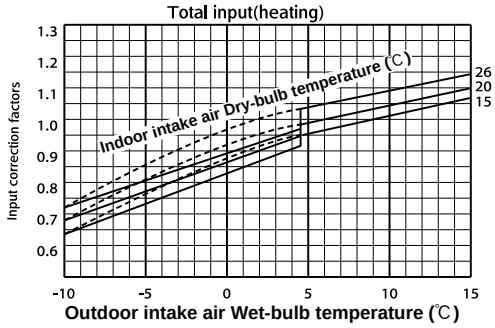

SUZ-A09VR
Correction of Cooling capacity

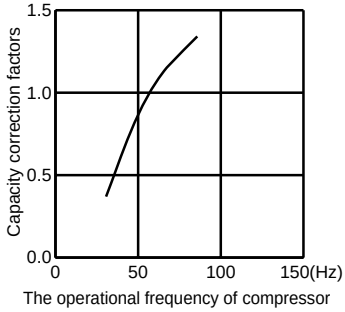

SUZ-A09VR
Correction of Cooling total input

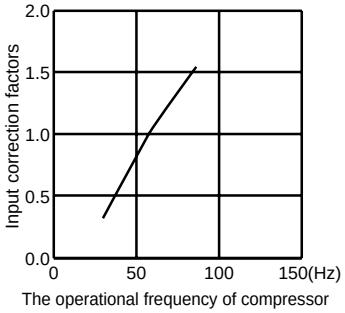

SUZ-A09VR
Correction of Heating capacity

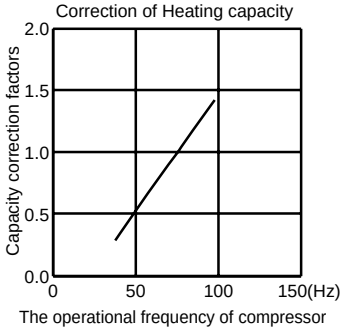

SUZ-A09VR
Correction of Heating total input

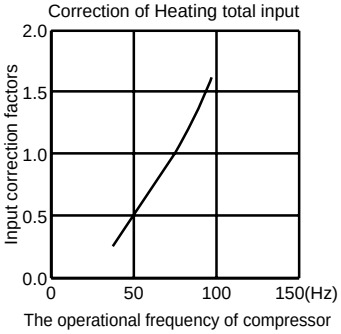

SUZ-A12VR
Correction of Cooling capacity

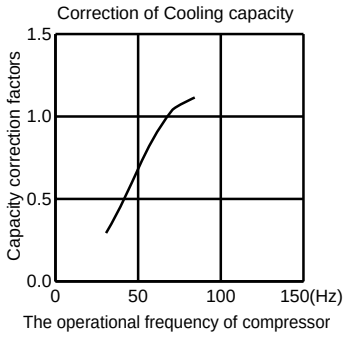

SUZ-A12VR
Correction of Cooling total input

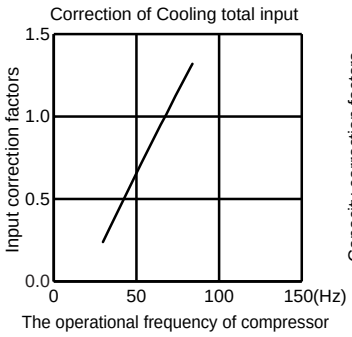

SUZ-A12VR
Correction of Heating capacity

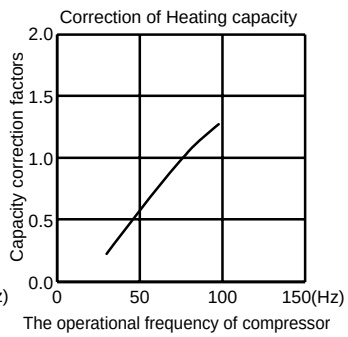

SUZ-A12VR
Correction of Heating total input

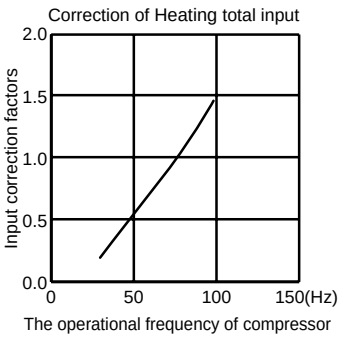

SUZ-A18VR
Correction of Cooling capacity

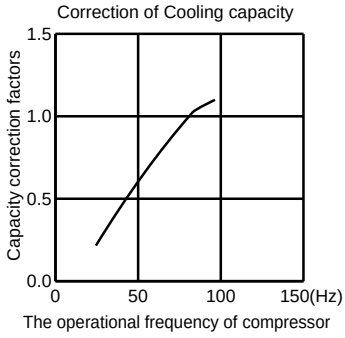

SUZ-A18VR
Correction of Cooling total input

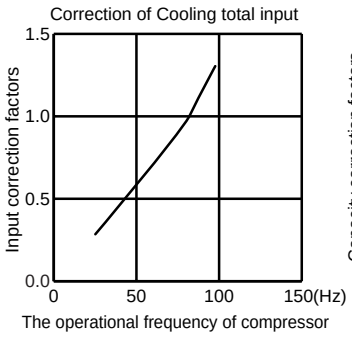

SUZ-A18VR
Correction of Heating capacity

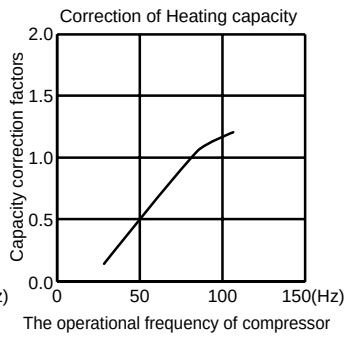

SUZ-A18VR
Correction of Heating total input

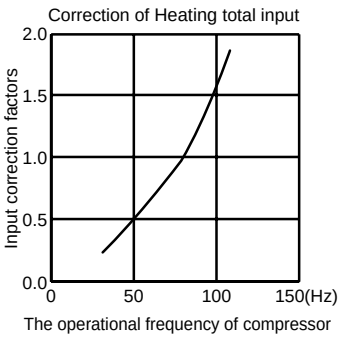

SUZ-A24VR
Correction of Cooling capacity

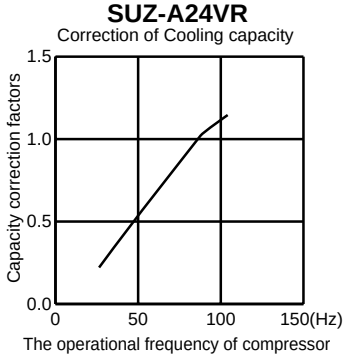

SUZ-A24VR
Correction of Cooling total input

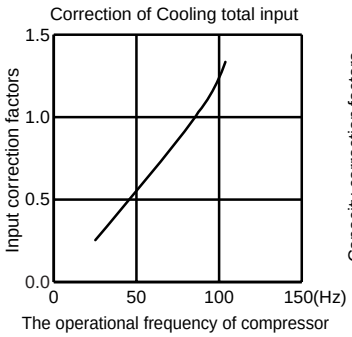

SUZ-A24VR
Correction of Heating capacity

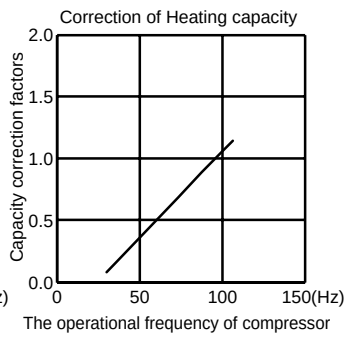

SUZ-A24VR
Correction of Heating total input

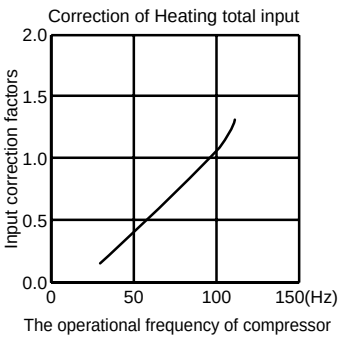

OUTDOOR LOW PRESSURE AND OUTDOOR UNIT CURRENT

<How to operate fixed-frequency operation (Test run operation)>
1. Press the TEST button to COOL or HEAT mode.
2. Test run operation starts and continue to operate for 30 minutes.
3. Compressor starts at rated frequency in COOL mode or 58Hz in HEAT mode.
4. Indoor fan operates at High speed.
5. After 30 minutes, test run operation finishes and EMERGENCY OPERATION starts.
6. To cancel test run operation (EMERGENCY OPERATION), press the ON/OFF button on remote controller.

NOTE : The unit of pressure has been changed to MPa on the international system of units (SI unit system).

The conversion factor is: **1(MPa [Gauge]) =10.2(kgf/㎠ [Gauge])**

OUTDOOR LOW PRESSURE AND OUTDOOR UNIT CURRENT

COOL operation

① Both indoor and outdoor unit are under the same temperature/humidity condition.
② Air flow : High speed
③ Operational frequency : 57Hz(SUZ-A09VR)
67Hz(SUZ-A12VR)
80Hz(SUZ-A18VR)
87Hz(SUZ-A24VR)

Dry-bulb temperature	Relative humidity(%)
20	50
25	60
30	70

SUZ-A09VR

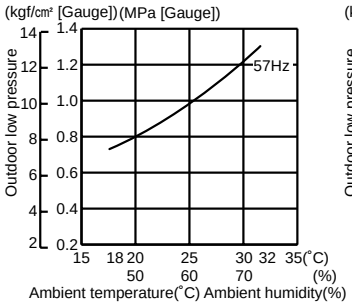

SUZ-A12VR

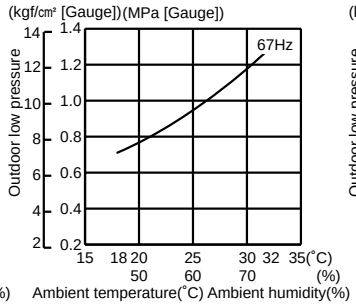

SUZ-A18VR

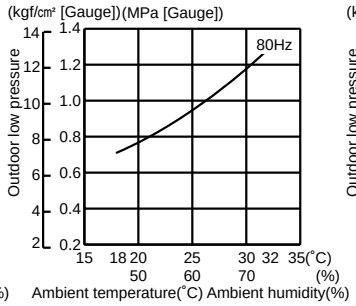

SUZ-A24VR

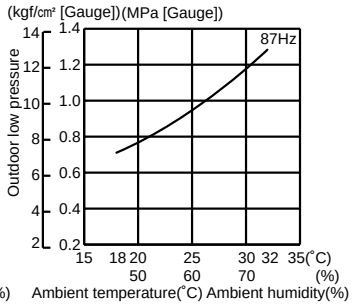

SUZ-A09VR

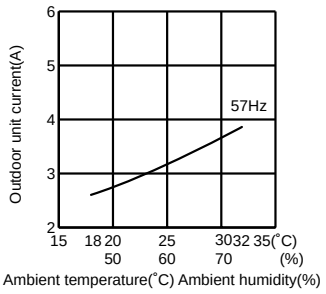

SUZ-A12VR

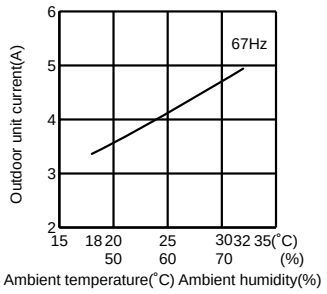

SUZ-A18VR

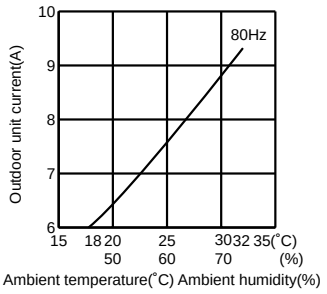

SUZ-A24VR

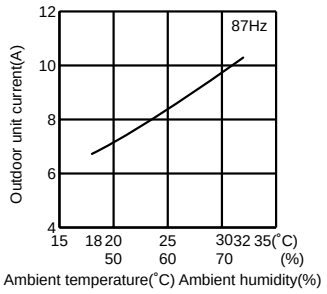

HEAT operation

Condition indoor: Dry bulb temperature 20.0°C
Wet bulb temperature 14.5°C
Condition outdoor: Dry bulb temperature 2,7,15,20.0°C
Wet bulb temperature 1,6,12,14.5°C

SUZ-A09VR

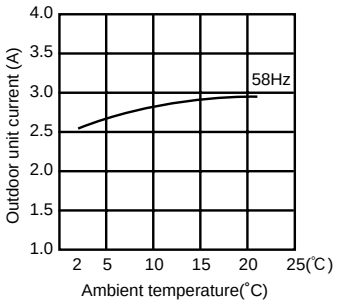

SUZ-A12VR

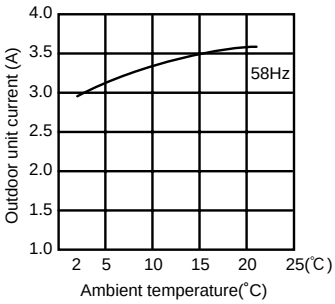

SUZ-A18VR

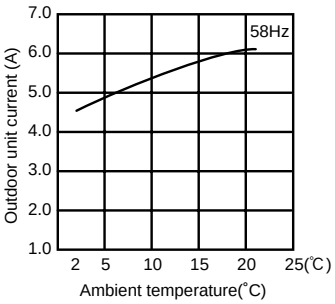

SUZ-A24VR

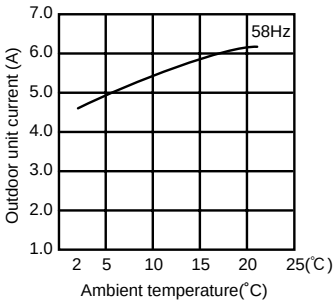

B.2.7 NOISE CRITERIA CURVES

SEZ-A12AR

<50Hz>

NOTCH	SPL(dB)	LINE
Hi	35	○——○
Lo	30	●——●

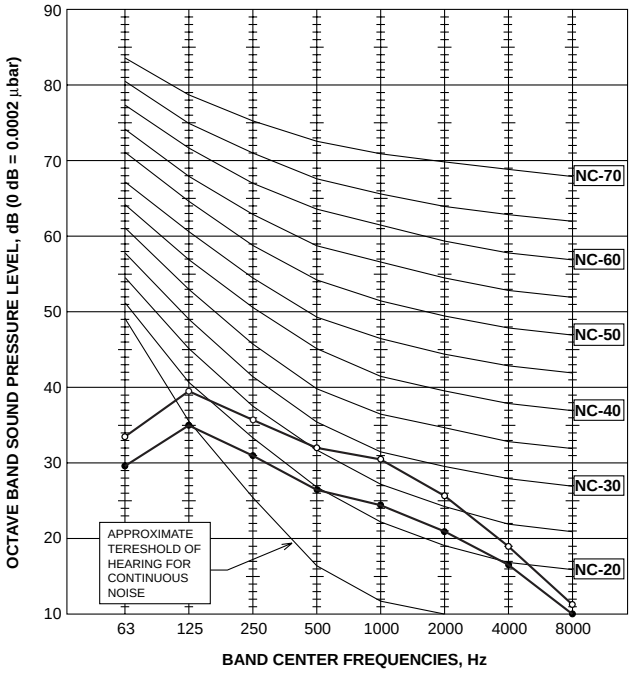

SEZ-A18AR

<50Hz>

NOTCH	SPL(dB)	LINE
Hi	39	○——○
Lo	31	●——●

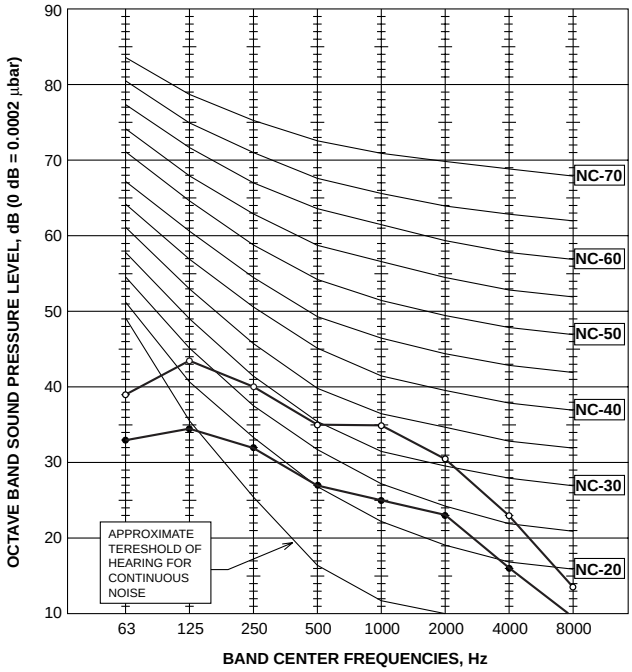

SEZ-A24AR

<50Hz>

NOTCH	SPL(dB)	LINE
Hi	43	○——○
Lo	32	●——●

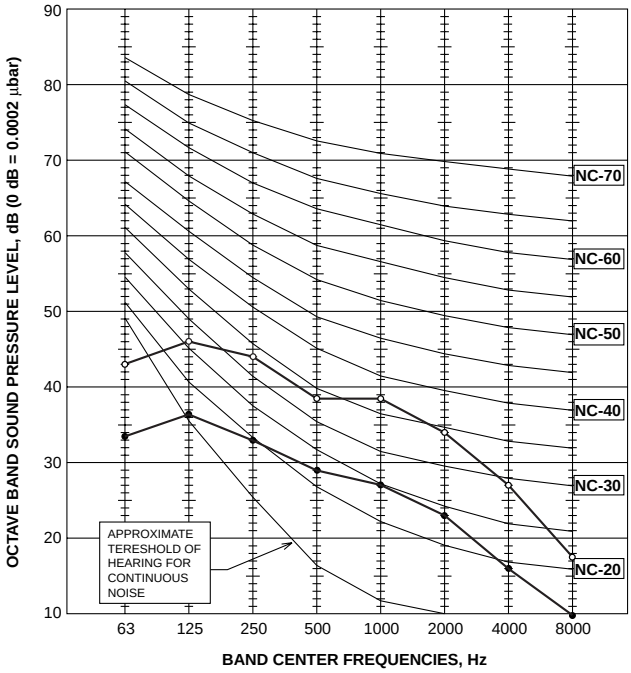

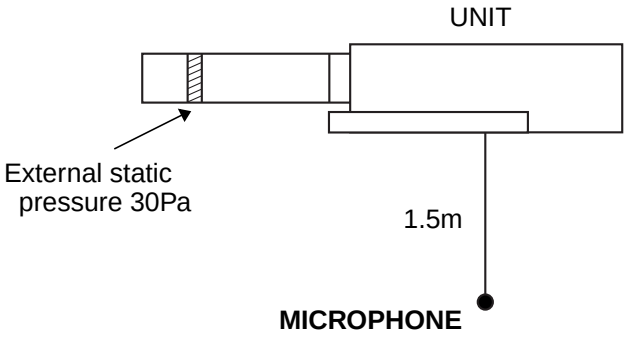

NOTE: The sound level is measured in an anechoic room where echoes are few, when compressor stops. The sound may be bigger than displayed level under actual installation condition by surrounding echoes. The sound level can be higher by about 2 dB than the displayed level during cooling and heating operation.

SEZ-A09CR

<50Hz>

NOTCH	SPL(dB)	LINE
Hi	36	○——○
Lo	25	●——●

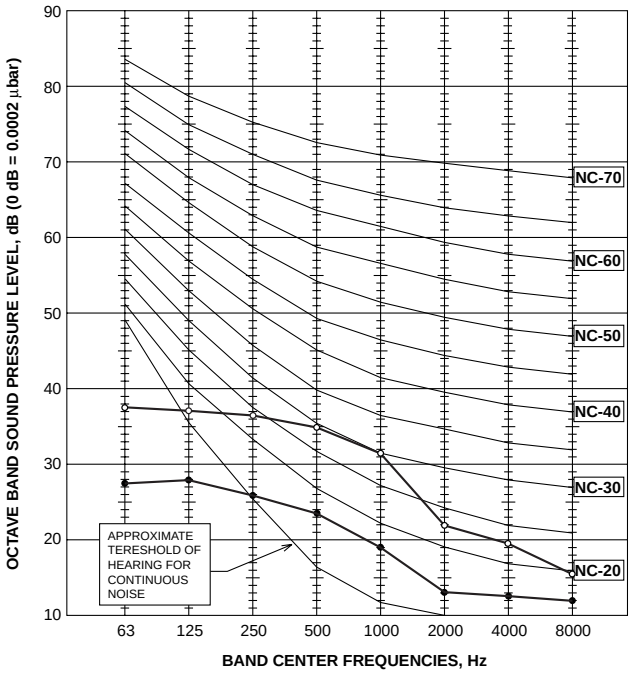

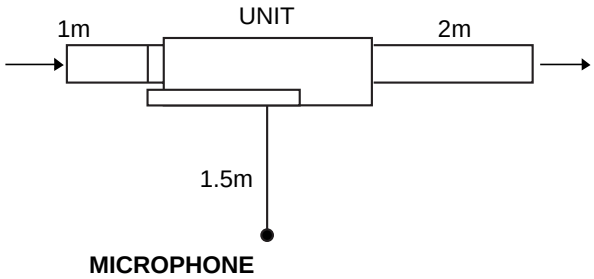

- Suction: back inlet
- External static pressure: 5pa
- Power source: 220V 50Hz

B.2.8 REMOTE CONTROLLER

On the controls are set, the same operation mode can be repeated by simply pressing the ON/OFF button.

● Operation buttons

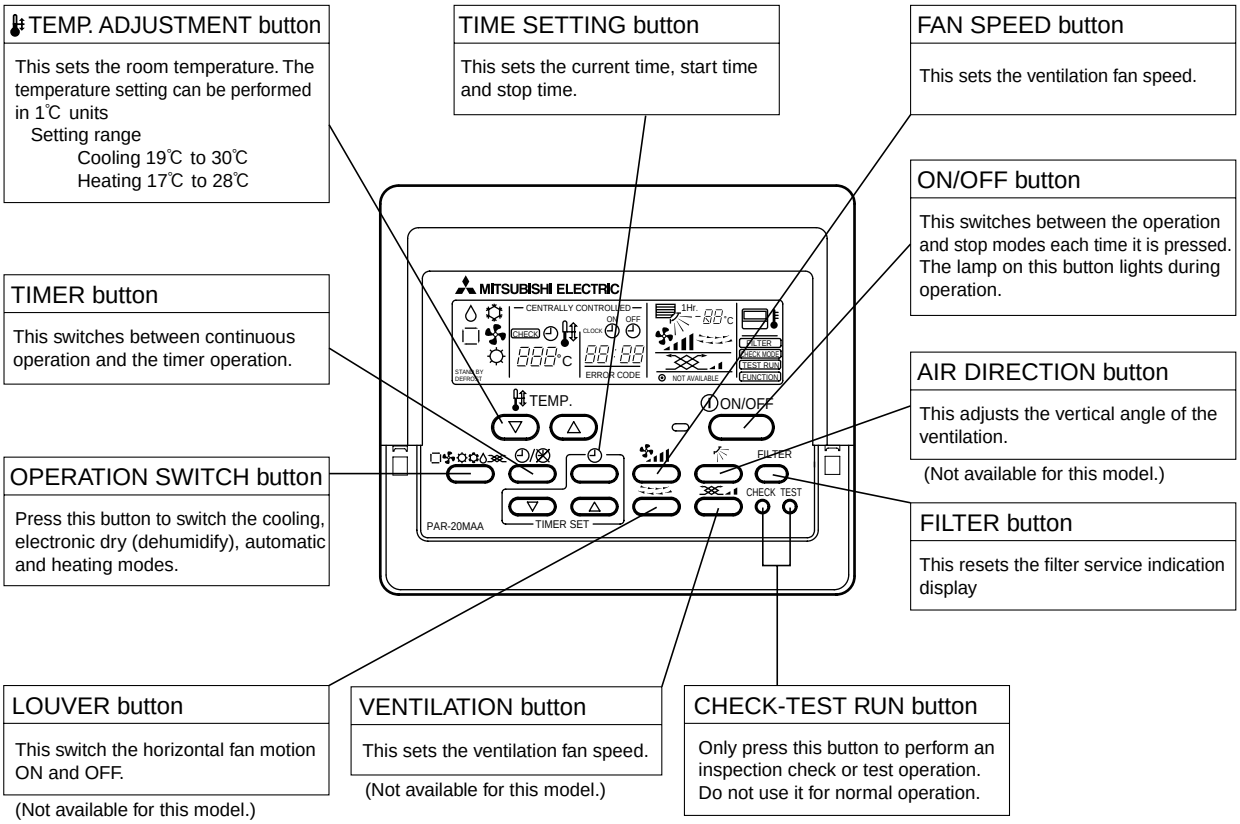

TEMP. ADJUSTMENT button

This sets the room temperature. The temperature setting can be performed in 1℃ units

Setting range
Cooling 19℃ to 30℃
Heating 17℃ to 28℃

TIME SETTING button

This sets the current time, start time and stop time.

FAN SPEED button

This sets the ventilation fan speed.

ON/OFF button

This switches between the operation and stop modes each time it is pressed. The lamp on this button lights during operation.

TIMER button

This switches between continuous operation and the timer operation.

AIR DIRECTION button

This adjusts the vertical angle of the ventilation.

(Not available for this model.)

OPERATION SWITCH button

Press this button to switch the cooling, electronic dry (dehumidify), automatic and heating modes.

FILTER button

This resets the filter service indication display

LOUVER button

This switch the horizontal fan motion ON and OFF.

(Not available for this model.)

VENTILATION button

This sets the ventilation fan speed.

(Not available for this model.)

CHECK-TEST RUN button

Only press this button to perform an inspection check or test operation. Do not use it for normal operation.

● **Display**

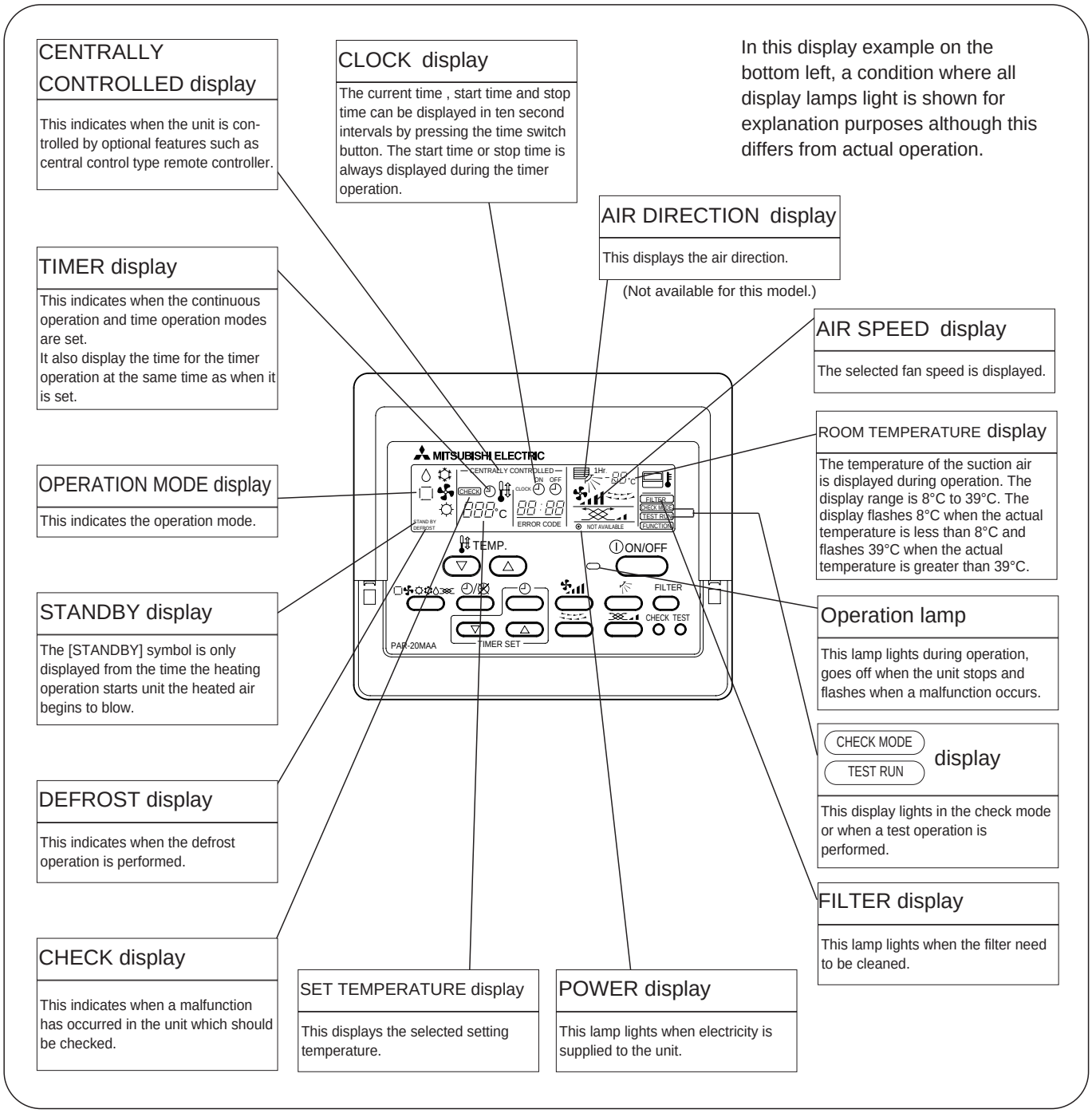

Caution

- Only the Power display lights when the unit is stopped and power supplied to the unit.
- When the central control remote control unit, which is sold separately, is used the ON-OFF button, operation switch button and TEMP. adjustment button do not operate.
- “NOT AVAILABLE” is displayed when the Air speed button are pressed.This indicates that this room unit is not equipped with the fan direction adjustment function and the louver function.
- When power is turned ON for the first time, it is normal that “H0” is displayed on the room temperature indication (For max. 2minutes). Please wait until this “H0” indication disappear then start the operation.

B.2.9 TROUBLESHOOTING

Before you call out a repair man, check the following table to see whether there is a simple solution to your problem.

[for wired remote controller]

Problem	Solution	Problem	Solution
Unit does not cool or heat very well.	Clean the filter.	"H0" is displayed in the remote controller.	An automatic startup test is being performed (will last for about two minutes).
The unit stops operating before arriving at the set temperature in the heating mode.	Frost forms when the outdoor temperature is low and humidity is high. Wait for about 10 minutes for the frost to melt.	An error code is displayed in the remote controller. The operating display of the wireless remote controller's receiver is flashing.	A self-diagnostic function is being performed to preserve the air conditioner. * Do not attempt to make repairs yourself. Turn the main switch off and contact the dealer from whom you bought the air conditioner. Provide him or her with the name of the unit and the information displayed in the remote controller.
A white mist is expelled from the indoor unit.	This may occur just after the unit is turned on when a high level of humidity is present in the room.		
The indicators of the remote controller do not light up when operated.	Turn on the power switch. "⊙" will be displayed.		
The start and stop functions are not available just after restarting the unit.	Wait about three minutes (operation has stopped to prevent damage to the air conditioner).		

If none of the above apply, turn the main switch off and contact the dealer from whom you bought the air-conditioner, telling him the model name and the nature of the problem. Do not try to fix the unit yourself.

In any of the following cases, turn off the main power switch and contact your local dealer for service:
- The operation lamp (in the remote controller) flashes.
- The switches do not work properly.
- The circuit breaker trips frequently (or the fuse blows frequently).
- Water has accidentally been splashed into the unit.
- Water leaks from the unit.
- Something is accidentally dropped into the air-conditioner.
- An unusual noise is heard during operation.

The following do not indicate any malfunction:
Odours: smells such as tobacco or cosmetic odours may persist after they have been sucked into the unit.
Sound of liquid flowing inside indoor unit: this can occur during or after operation and is simply the sound of refrigerant being circulated inside the unit.
Ticking sound coming from indoor unit: this can occur when cooling or heating has just begun or has just stopped. It is caused by the indoor unit shrinking or expanding slightly due to the change in temperature.

NOTE: The refrigerant charged in the air conditioner is safe. Refrigerant normally does not leak, however, if refrigerant gas leaks indoors, and comes into contact with the fire of a fan heater, space heater, stove, etc., harmful substances will be generated.
Be sure to ask the service representative whether there is refrigerant leakage or not when repairs are carried out.

B.2.10 INSTALLATION PROCEDURE

B.2.10.1 SEZ-A12, A18, A24AR

1. Safety precautions

- **Be sure to read "The following should always be observed for safety" before installing the air conditioner.**
- **Be sure to observe the cautions specified here as they include important items related to safety.**
- **The indications and meanings are as follows.**

⚠ **Warning:**
Could lead to death, serious injury, etc.

⚠ **Caution:**
Could lead to serious injury in particular environments when operated incorrectly.

- **After reading this manual, be sure to keep it together with the instruction manual in a handy place on the customer's site.**

⃠ : Indicates an action that must be avoided.
: Indicates that important instructions must be followed.
: Indicates a part which must be grounded.
: Indicates that caution should be taken with rotating parts.
: Indicates that the main switch must be turned off before servicing.
: Beware of electric shock.
: Beware of hot surface.

⚠ **Warning:**
Carefully read the labels affixed to the main unit.

⚠ **Warning:**

- **Do not install it by yourself (customer).**
  Incomplete installation could cause injury due to fire, electric shock, the unit falling or leakage of water. Consult the dealer from whom you purchased the unit or special installer.
- **Install the unit securely in a place which can bear the weight of the unit.**
  When installed in an insufficient strong place, the unit could fall causing injured.
- **Use the specified wires to connect the indoor and outdoor units securely and attach the wires firmly to the terminal board connecting sections so the stress of the wires is not applied to the sections.**
  Incomplete connecting and fixing could cause fire.
- **Do not use intermediate connection of the power cord or the extension cord and do not connect many devices to one AC outlet.**
  It could cause a fire or an electric shock due to defective contact, defective insulation, exceeding the permissible current, etc.
- **Check that the refrigerant gas does not leak after installation has completed.**
- **Perform the installation securely referring to the installation manual.**
  Incomplete installation could cause a personal injury due to fire, electric shock, the unit falling or leakage of water.
- **Perform electrical work according to the installation manual and be sure to use an exclusive circuit.**
  If the capacity of the power circuit is insufficient or there is incomplete electrical work, it could result in a fire or an electric shock.
- **Attach the electrical part cover to the indoor unit and the service panel to the outdoor unit securely.**
  If the electrical part cover in the indoor unit and/or the service panel in the outdoor unit are not attached securely, it could result in a fire or an electric shock due to dust, water, etc.
- **Be sure to use the part provided or specified parts for the installation work.**
  The use of defective parts could cause an injury or leakage of water due to a fire, an electric shock, the unit falling, etc.
- **Ventilate the room if refrigerant leaks during operation.**
  If the refrigerant comes in contact with a flame, poisonous gases will be released.

⚠ **Caution:**

- **Perform grounding.**
  Do not connect the ground wire to a gas pipe, water pipe arrester or telephone ground wire. Defective grounding could cause an electric shock.
- **Do not install the unit in a place where an inflammable gas leaks.**
  If gas leaks and accumulates in the area surrounding the unit, it could cause an explosion.
- **Install a ground leakage breaker depending on the installation place (where it is humid).**
  If a ground leakage breaker is not installed, it could cause an electric shock.
- **Perform the drainage/piping work securely according to the installation manual.**
  If there is a defect in the drainage/piping work, water could drop from the unit and household goods could be wet and damaged.
- **Fasten a flare nut with a torque wrench as specified in this manual.**
  When fastened too tight, a flare nut may broken after a long period and cause a leakage of refrigerant.

2. Selecting the installation location

2.1. Indoor unit

- Where airflow is not blocked.
- Where cool air spreads over the entire room.
- Where it is not exposed to direct sunshine.
- At a distance 1 m or more away from your TV and radio (to prevent picture from being distorted or noise from being generated).
- In a place as far away as possible from fluorescent and incandescent lights (so the infrared remote control can operate the air conditioner normally).
- Where the air filter can be removed and replaced easily.

⚠ **Warning:**
Mount the indoor unit into a ceiling strong enough to withstand the weight of the unit.

2.2. Outdoor unit

- Where it is not exposed to strong wind.
- Where airflow is good and dustless.
- Where it is not exposed to rain and direct sunshine.
- Where neighbours are not annoyed by operation sound or hot air.
- Where rigid wall or support is available to prevent the increase of operation sound or vibration.
- Where there is no risk of combustible gas leakage.
- When installing the unit at a high level, be sure to fix the unit legs.
- Where it is at least 3 m away from the antenna of TV set or radio. (Otherwise, images would be disturbed or noise would be generated.)
- Install the unit horizontally.

⚠ **Caution:**
Avoid the following places for installation where air conditioner trouble is liable to occur.

- **Where there is too much machine oil.**
- **Salty environment as seaside areas.**
- **Hot-spring areas.**
- **Where sulfide gas exists.**
- **Other special atmospheric areas.**

3. Installation diagram & Accessories

■ **SEZ-A12/A18/A24AR**

Air inlet (rear side) dimensions

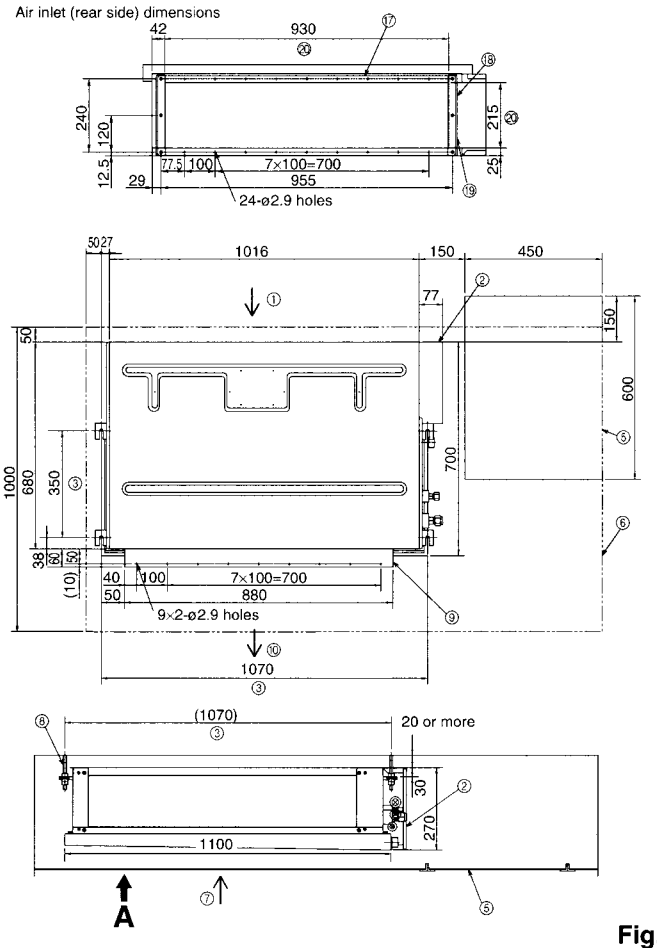

A

Air inlet (bottom side) dimensions

(mm)

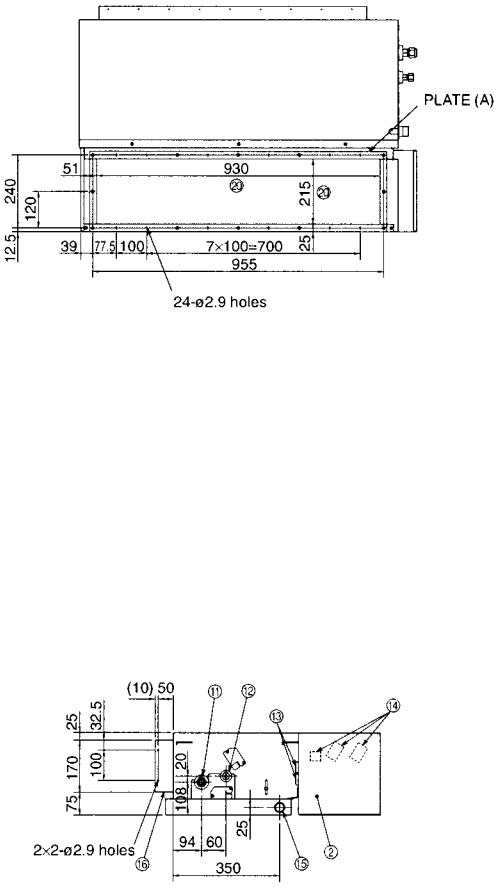

Fig. 3-1

3.1. Indoor unit (Fig. 3-1)

① Air inlet (rear side) *Select the either back side or bottom side
② Electrical parts box
③ Suspension bolt pitch
⑤ Access door
⑥ Service space (It is necessary to maintain a working service area from the ceiling.)
⑦ Air inlet (bottom side) *Select the either back side or bottom side
⑧ Suspension bolt M10 or 3/8 (procure locally)
⑨ Air outlet duct flange
⑩ Air outlet
⑪ Refrigerant pipe (gas)
⑫ Refrigerant pipe (liquid)
⑬ Wiring entry
⑭ Terminal block
⑮ Drain plug R1 male
⑯ Air outlet duct flange
⑰ In case of bottom side suction, mount the PLATE (A) on the rear side.
⑱ After installation, remove the transportation support PLATE (B).
⑲ PLATE (B) × 2
⑳ Inlet size

■ **SUZ-A09/A12AR**

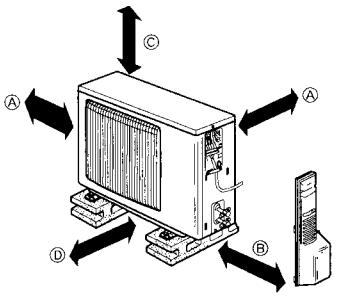

■ **SUZ-A18/A24AR**

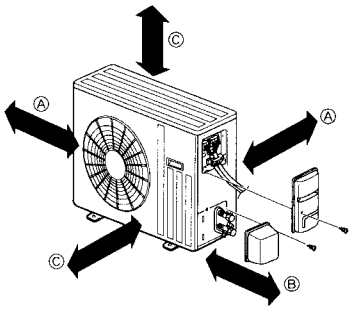

Fig. 3-2

3.2. Outdoor unit (Fig. 3-2)

Ventilation and service space

■ **SUZ-A09/A12AR**

Ⓐ 100 mm or more
Ⓑ 350 mm or more
Ⓒ Basically open 100 mm or more without only obstruction in front and on both sides of the unit.
Ⓓ 200 mm or more (Open two sides of left, right, or rear side.)

■ **SUZ-A18/A24AR**

Ⓐ 100 mm or more
Ⓑ 350 mm or more
Ⓒ 500 mm or more

When the piping is to be attached to a wall containing metals (tin plated) or metal netting, use a chemically treated wooden piece 20 mm or thicker between the wall and the piping or wrap 7 to 8 turns of insulation vinyl tape around the piping.

Units should be installed by licensed contractor accordingly to local code requirement.

3. Installation diagram & Accessories

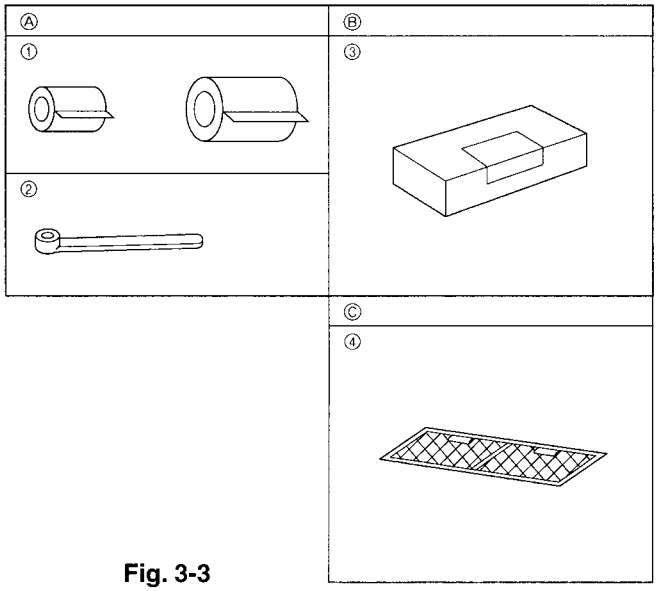

Fig. 3-3

3.3. Checking the indoor unit accessories (Fig. 3-3)

Check that the indoor unit is equipped with the following parts and accessories:

Ⓐ Refrigerant pipe parts

① Pipe cover (for refrigerant piping joint)
Small diameter × 1
Large diameter × 1
② Bands for temporary tightening of pipe cover × 4

Ⓑ Remote controller parts

③ Parts contained in the cardboard box × 1
Check the contents and read the explanations provided.

Ⓒ Air filter parts

④ Parts contained in the bag × 1
Check the contents and read the explanations provided.

Refrigerant and drainage pipe sizes

Model		SEZ-A12AR	SEZ-A18AR	SEZ-A24AR
Refrigerant pipe	Liquid	OD ø6.35 (1/4")	OD ø6.35 (1/4")	OD ø6.35 (1/4")
	Gas	OD ø9.52(3/8")	OD ø12.7 (1/2")	OD ø15.88 (5/8")
Drainage pipe		Hard PVC pipe : OD ø26 (1")		

4. Indoor unit installation

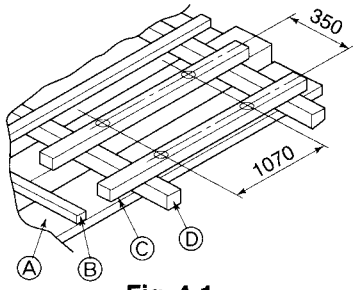

Fig. 4-1

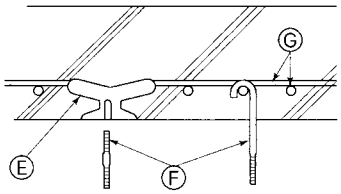

Fig. 4-2

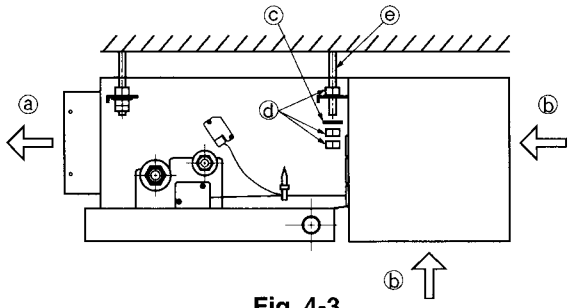

Fig. 4-3

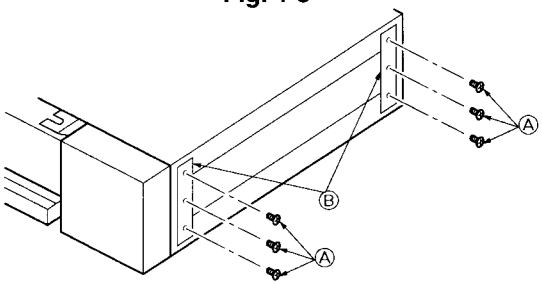

Fig. 4-4

4.1. Suspension Structure (Give site of suspension strong structure.)

4.1.1. Wooden structure (Fig. 4-1)

- Select tie beam (one-story houses) or second-floor girder (two-story houses) as reinforcement member.
- Use sturdy beams of at least 6 cm square for beam pitch of 90 cm or less or of at least 9cm square for beam pitch of 90-180 cm.

Ⓐ Ceiling
Ⓑ Rafter
Ⓒ Beam
Ⓓ Roof beam

4.1.2. Ferro-concrete structures (Fig. 4-2)

Secure the suspension bolts using the method shown, or use steel or wooden hangers, etc. to install the suspension bolts.

Ⓔ Use inserts rated at 100-150 kg each (procure locally)
Ⓕ Suspension bolts M10 (3/8") (procure locally)
Ⓖ Steel reinforcing rod

4.1.3. Installing the suspension bolts

- Check the pitch of the suspension bolts.
- Use the ø10 (3/8") suspension bolts (×4, procure locally).
- Adhere strictly to the length of the suspension bolts.

4.2. Suspending the unit (Fig. 4-3)

Direct suspension method:

Raise the unit and line it up with the suspension bolts, then secure it using both nuts.

ⓐ Air outlet
ⓑ Air intake (selecting the either back side or bottom side.)
ⓒ Washer (procure locally)
ⓓ Nuts (procure locally)
ⓔ Suspension bolts (procure locally)

4.3. Transportation support removal (Fig. 4-4)

After installation, completely remove the transportation support because this part should only be used during transportation.

Ⓐ 3 screws
Ⓑ Transportation support

5. Refrigerant piping work

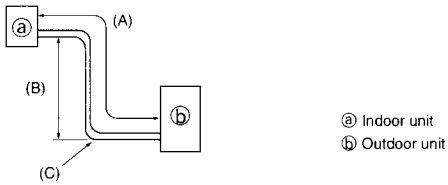

Fig. 5-1

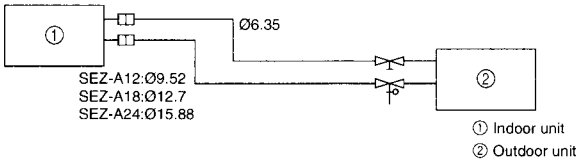

Fig. 5-2

5.1. Refrigerant pipe (Fig. 5-1)

Maximum difference between heights of indoor unit and outdoor unit, the length of refrigerant piping and the number of bends in piping are within limits shown below.

Models	(A) Pipe length (one way)	(B) Height difference	(C) Number of bends (one way)
SEZ-A12AR	max. 20 m	max. 12 m	max. of 10
SEZ-A18AR	max. 30 m	max. 15 m	max. of 10
SEZ-A24AR	max. 30 m	max. 15 m	max. of 10

*1: Height difference limitations are binding regardless of which unit, indoor or outdoor, is positioned higher.

Avoid the following places for installation where air conditioner trouble is liable to occur.

- Where there is too much oil such as for machine or cooking.
- Salty environment as seaside areas.
- Hot-spring areas.
- Where sulfide gas exists.
- Other special atmospheric areas.
- This unit has flared connections on both indoor and outdoor sides. (Fig. 5-2)
- Refrigerant pipes are used to connect the indoor and outdoor units as shown in the figure below.
- Insulate both refrigerant and drainage piping completely to prevent condensation.
- Refrigerant adjustment … If pipe length exceeds 7 m, additional refrigerant (R410A) charge is required.
  (The outdoor unit is charged with refrigerant for 7 m pipe length.)

Pipe length	7 m maximum	No additional charge required	–	
	Exceeding 7 m	Additional charge required	Refrigerant to be added	SEZ-A12AR:30g/m
				SEZ-A18AR:50g/m
				SEZ-A24AR:50g/m

Piping preparation

- Refrigerant pipes of 3, 5, 7, 10 and 15 m are available as optional items.

(1) Table below shows the specifications of pipes commercially available.

Model	Pipe	Outside diameter		Min wall thickness	Insulation thickness	Insulation material
		mm	inch			
SEZ-A12AR	For liquid	6.35	1/4	0.8 mm	8 mm	Heat resisting foam plastic 0.045 specific gravity
	For gas	9.52	3/8	0.8 mm	8 mm	
SEZ-A18AR	For liquid	6.35	1/4	0.8 mm	8 mm	
	For gas	12.7	1/2	0.8 mm	8 mm	
SEZ-A24AR	For liquid	6.35	1/4	0.8 mm	8 mm	
	For gas	15.88	5/8	1.0 mm	8 mm	

(2) Ensure that the 2 refrigerant pipes are well insulated to prevent condensation.

(3) Refrigerant pipe bending radius must be 10 cm or more.

⚠ **Caution:**
Using careful insulation of specified thickness. Excessive thickness prevents storage behind the indoor unit and smaller thickness causes dew drippage.

5. Refrigerant piping work

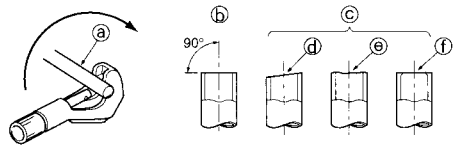

ⓐ Copper tubes
ⓑ Good
ⓒ No good
ⓓ Tilted
ⓔ Uneven
ⓕ Burred

Fig. 5-3

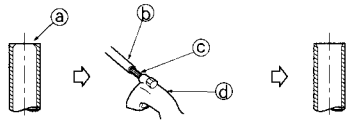

ⓐ Burr
ⓑ Copper tube/pipe
ⓒ Spare reamer
ⓓ Pipe cutter

Fig. 5-4

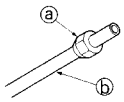

ⓐ Flare nut
ⓑ Copper tube

Fig. 5-5

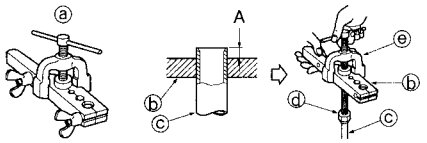

ⓐ Flaring tool
ⓑ Die
ⓒ Copper tube
ⓓ Flare nut
ⓔ Yoke

Fig. 5-6

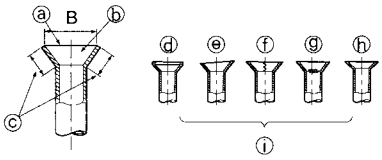

Fig. 5-7

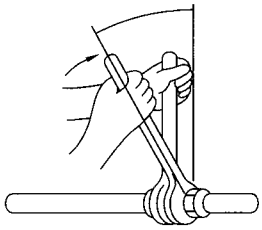

Fig. 5-8

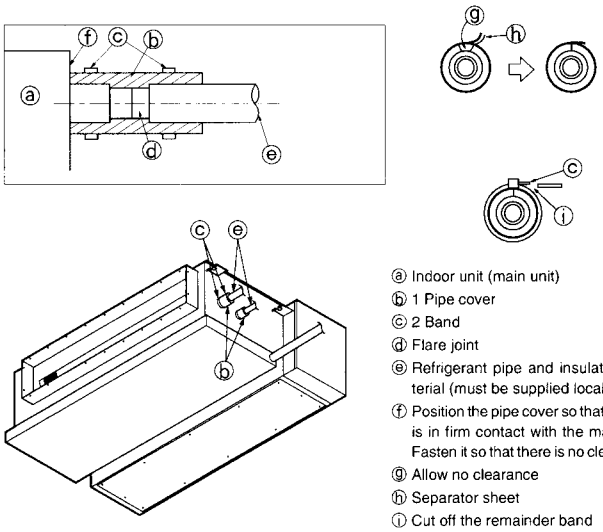

ⓐ Indoor unit (main unit)
ⓑ 1 Pipe cover
ⓒ 2 Band
ⓓ Flare joint
ⓔ Refrigerant pipe and insulating material (must be supplied locally)
ⓕ Position the pipe cover so that the end is in firm contact with the main unit. Fasten it so that there is no clearance.
ⓖ Allow no clearance
ⓗ Separator sheet
ⓘ Cut off the remainder band

Fig. 5-9

5.2. Flaring work

- Main cause of gas leakage is defect in flaring work.
  Carry out correct flaring work in the following procedure.

5.2.1. Pipe cutting (Fig. 5-3)

- Using a pipe cutter cut the copper tube correctly.

5.2.2. Burrs removal (Fig. 5-4)

- Completely remove all burrs from the cut cross section of pipe/tube.
- Put the end of the copper tube/pipe to downward direction as you remove burrs in order to avoid burrs drop in the tubing.

5.2.3. Putting nut on (Fig. 5-5)

- Remove flare nuts attached to indoor and outdoor unit, then put them on pipe/tube having completed burr removal.
  (not possible to put them on after flaring work)

5.2.4. Flaring work (Fig. 5-6)

- Carry out flaring work using flaring tool as shown at the right.

Pipe diameter (mm)	Dimension	
	A (mm) When the tool for R410A is used Clutch type	$B^{+0}_{-0.4}$ (mm)
6.35	0 - 0.5	9.1
9.52	0 - 0.5	13.2
12.7	0 - 0.5	16.6
15.88	0 - 0.5	19.7

Firmly hold copper tube in a die in the dimension shown in the table at above.

5.2.5. Check (Fig. 5-7)

- Compare the flared work with a figure in right side hand.
- If flare is noted to be defective, cut off the flared section and do flaring work again.

ⓐ Smooth all around
ⓑ Inside is shining without any scratches
ⓒ Even length all around
ⓓ Too much
ⓔ Tilted
ⓕ Scratch on flared plane
ⓖ Cracked
ⓗ Uneven
ⓘ Bad examples

5.3. Pipe connection (Fig.5-8)

- Apply a thin coat of refrigeration oil on the seat surface of pipe.
- For connection first align the center, then tighten the first 3 to 4 turns of flare nut.
- Use tightening torque table below as a guideline for indoor unit side union joint section, and tighten using two wrenches. Excessive tightening damages the flare section.

Copper pipe O.D. (mm)	Flare nut O.D. (mm)	Tightening torque (N·m)
ø6.35	17	14 - 18
ø9.52	22	34 - 42
ø12.7	26	49 - 61
ø15.88	29	68 - 82

⚠ **Warning:**
Be careful of flying flare nut! (Internally pressurized)
Remove the flare nut as follows:
1. **Loosen the nut until you hear a hissing noise.**
2. **Do not remove the nut until the gas has been completely released (i.e., hissing noise stops).**
3. **Check that the gas has been completely released, and then remove the nut.**

Outdoor unit connection

Connect pipes to stop valve pipe joint of the outdoor unit in the same manner applied for indoor unit.

- For tightening use a torque wrench or spanner, and use the same tightening torque applied for indoor unit.

Refrigerant pipe insulation (Fig. 5-9)

(1) Peel the separator sheet off the accompanying pipe cover, and wrap it around the refrigerant pipe, making sure that the side which is slit faces upwards.
(2) Be sure to fix both ends of the pipe cover using an attachment band (ensure that the band's joint faces upwards).
(3) Stick vinyl tape on the joint positions.

5. Refrigerant piping work

5.4. Purging procedures leak test

PURGING PROCEDURES

↓

Connect the refrigerant pipes (both the liquid and gas pipes) between the indoor and the outdoor units.

↓

Remove the service port cap of the stop valve on the side of the outdoor unit gas pipe. (The stop valve will not work in its initial state fresh out of the factory (totally closed with cap on).)

↓

Connect the gage manifold valve and the vacuum pump to the service port of the stop valve on the gas pipe side of the outdoor unit.

↓

Run the vacuum pump. (Vacuumize for more than 15 minutes.)

↓

Check the vacuum with the gage manifold valve, then close the gage manifold valve, and stop the vacuum pump.

↓

Leave it as is for one or two minutes. Make sure the pointer of the gage manifold valve remains in the same position. Confirm that the pressure gage show -0.101MPa (-760 mmHg).

↓

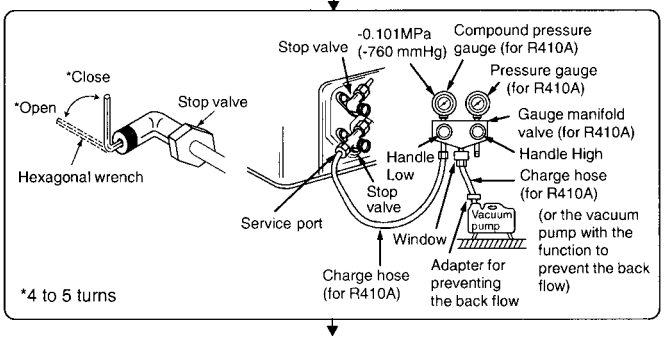

↓

Remove the gage manifold valve quickly from the service port of the stop valve.

↓

After refrigerant pipes are connected and evacuated, fully open all stop valves on gas and liquid pipe sides.
Operating without fully opening lowers the performance and causes trouble.

↓

Pipe length : 7 m maximum No gas charge is needed.	Pipe length exceeding 7 m Charge the prescribed amount of gas.

↓

Tighten the cap to the service port to obtain the initial status.

↓

Retighten the cap

↓

Leak test

6. Drainage piping work

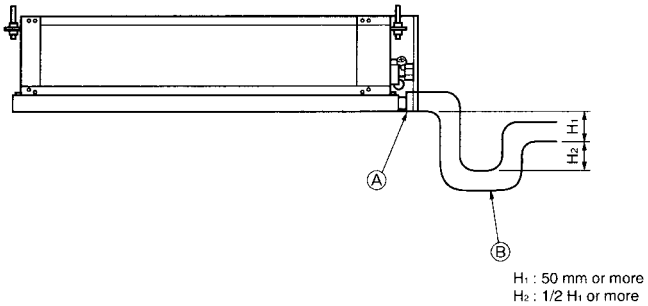

Fig. 6-1

6.1. Drainage pipe connection (Fig. 6-1)

Indoor unit's drainage pipe

- The drainage pipe should be arranged so that the discharge end is lower than the other end, as shown in the figure opposite.
- Place the trap outside the unit.
- After connecting the drainage pipe, make sure that water is discharged properly and that there are no leaks.

Ⓐ Drainage piping connection 1 RP male.
Ⓑ Trap

Outdoor unit drainage pipe connection

When drainage piping is necessary, use the drain pan (supplied as an option).

7. Electrical work

(1) SEZ-A12AR (1:1 SYSTEM)

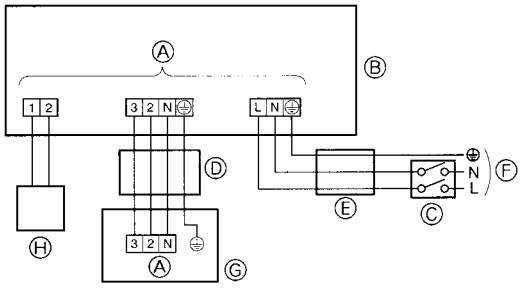

(2) SEZ-A18/A24AR (1:1 SYSTEM) OR MULTI SYSTEM

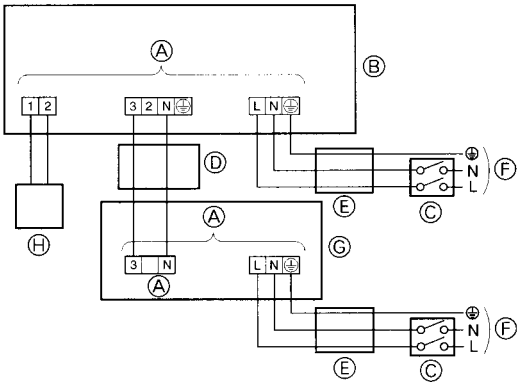

Fig. 7-1

7.1. Power supply (Fig. 7-1)

Electrical specification	Input capacity Main Switch/Fuse (A)		
Power supply	SEZ-A12AR	SEZ-A18AR	SEZ-A24AR
(1 phase ~/N, 220-240V, 50Hz)	10	20	20

⚠ **Warning:**

- **Do not use intermediate connection of the power cord, etc. or an extension cord or connect many devices to one AC outlet. It could cause a fire or electric shock due to defective contact, defective insulation, exceeding the permissible current, etc.**
- **Supply power should be taken from independently branched circuit. If not, it could cause a fire.**
- **A switch with at least 3 mm contact separation in each pole shall be provided by the air conditioner installation.**

Ⓐ Terminal block
Ⓑ Indoor unit (Refer to Fig. 7-2)
Ⓒ Breaker
Ⓓ 4-core cable ((2) · · · 2-core cable)
Ⓔ 3-core cable
Ⓕ Power supply
Ⓖ Outdoor unit (Refer to Fig. 7-3)
Ⓗ Remote controller

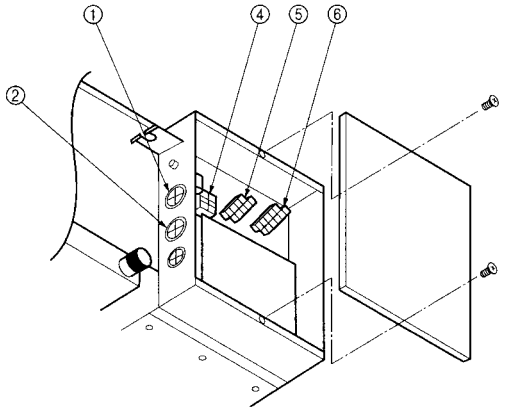

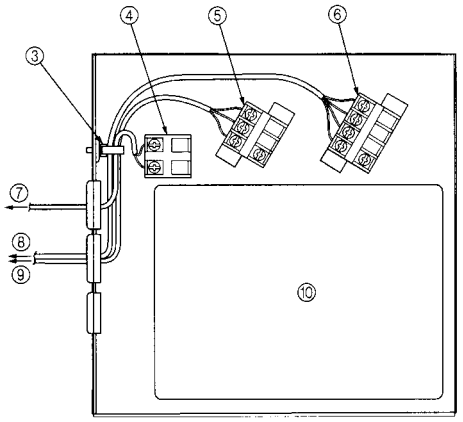

Fig. 7-2

7.2. Indoor wire connection (Fig. 7-2)

Work procedure

1. Remove 2 screws to detach the electric component cover.
2. Route each cable through the wiring intake into the electric component box. (Procure power cable and in-out connecting cable locally and use remote control cable supplied with the unit.)
3. Securely connect the power cable and the in-out connecting cable and the remote control cable to the terminal blocks.
4. Secure the cables with clamps inside the electric component box.
5. Attach the electric component cover as it was.

- Fix power supply cable and indoor/outdoor cable to control box by using buffer bushing for tensile forse. (PG connection or the like.)

⚠ **Warning:**

- **Attach the electrical part cover securely. If it is attached incorrectly, it could result in a fire, electric shock due to dust, water, etc.**
- **Use the specified indoor/outdoor unit connecting wire to connect the indoor and outdoor units and fix the wire to the terminal bed securely so that no stress is applied to the connecting section of the terminal bed. Incomplete connection or fixing of the wire could result in a fire.**
- **The wiring configuration of the indoor unit's fan motor is for a 50Hz power supply. The wiring must be reconfigured if a 60Hz power supply is used. Refer to the wiring diagram for details.**

① Entry for remote controller cable
② Entry for power supply cable and Indoor-Outdoor connecting cable
③ Cable clamp
④ Remote controller terminal
⑤ Power supply terminal
⑥ Indoor/Outdoor unit connecting terminal
⑦ To remote controller
⑧ To power supply source
⑨ To outdoor unit
⑩ Indoor controller

7. Electrical work

(1) SEZ-A12AR (1:1 SYSTEM) (2) SEZ-A18/24AR (1:1 SYSTEM) OR MULTI SYSTEM

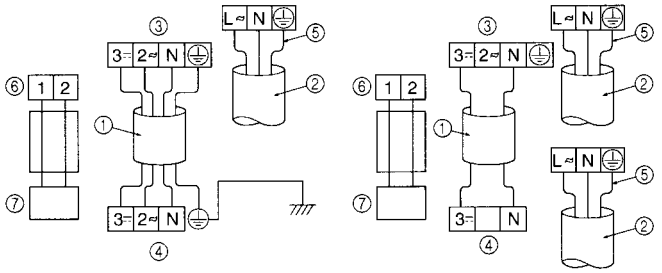

Fig. 7-3

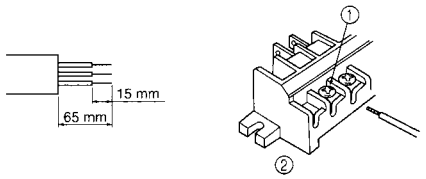

Fig. 7-4

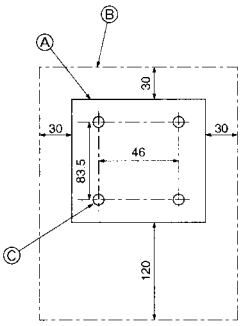

Fig. 7-5

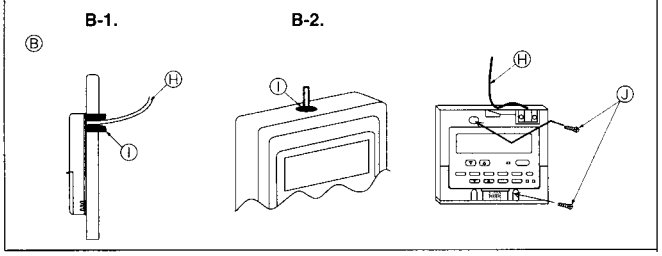

Fig. 7-6

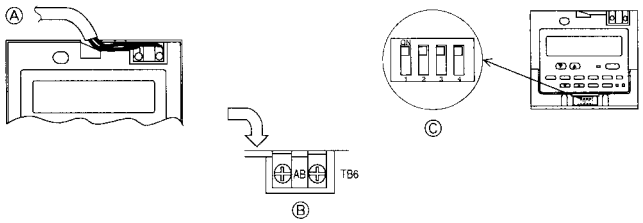

Fig. 7-7

- Perform wiring as shown in the diagram to the lower left. (Procure the cable locally). (Fig. 7-3)
  Make sure to use cables of the correct polarity only.

① Connecting cable
4 core VVF cable
- SEZ-A12:1.0 mm² or more
- SEZ-A18, A24:1.5 mm² or more

Colors
N : Blue
2 : Brown
3 : Red
⏚ : Green/Yellow

② Power supply cable
3 core with ground IEC cord
- SEZ-A12:1.0 mm² or more
- SEZ-A18, A24:1.5 mm² or more

Colors
N : Blue
L : Brown
⏚ : Green/Yellow

③ Indoor
④ Outdoor
⑤ Always install an earth longer than other cables
⑥ Remote controller cable
Wire No × size (mm²) : Cable 2C × 0.69
This wire accessory of remote controller
(wire length : 10m, non-polar)
⑦ Remote controller

- Connect the terminal blocks as shown in the diagram below. (Fig. 7-4)
  ① Loosen terminal screw
  ② Terminal bed

(1) Use care not to make mis-wiring.
(2) Firmly tighten the terminal screws to prevent then from loosening.
(3) After tightening, pull the wires lightly to confirm that they do not move.

7.3. Remote controller

7.3.1. For wired remote controller

1) Installing procedures

(1) Select an installing position for the remote controller. (Fig. 7-5)
The temperature sensors are located on both remote controller and indoor unit.

▶ **Procure the following parts locally:**
Two piece switch box
Thin copper conduit tube
Lock nuts and bushings
Ⓐ Remote controller profile
Ⓑ Required clearances surrounding the remote controller
Ⓒ Installation pitch

(2) Seal the service entrance for the remote controller cord with putty to prevent possible invasion of dew drops, water, cockroaches or worms. (Fig. 7-6)
Ⓐ For installation in the switch box:
Ⓑ For direct installation on the wall select one of the following:
- Prepare a hole through the wall to pass the remote controller cord (in order to run the remote controller cord from the back), then seal the hole with putty.
- Run the remote controller cord through the cut-out upper case, then seal the cut-out notch with putty similarly as above.

B-1. To lead the remote controller cord from the back of the controller:
B-2. To run the remote controller cord through the upper portion:

(3) For direct installation on the wall
Ⓒ Wall
Ⓓ Conduit
Ⓔ Lock nut
Ⓕ Bushing
Ⓖ Switch box
Ⓗ Remote controller cord
Ⓘ Seal with putty
Ⓙ Wood screw

2) Connecting procedures (Fig. 7-7)

① Connect the remote controller cord to the terminal block.
Ⓐ To the terminal block on the indoor unit
Ⓑ TB6 (No polarity)
② Set the dip switch No.1 shown below when using two remote controller's for the same group.
Ⓒ Dip switches

Setting the dip switches

The dip switches are at the bottom of the remote controller. Remote controller Main/Sub and other function settings are performed using these switches. Ordinarily, only change the Main/Sub setting of SW No.1. (The factory settings are all "ON".)

<SW No. 1>

SW contents Main	Remote controller Main/Sub setting
ON/OFF	Main/Sub
Comment	Set one of the two remote controllers at one group to "Main"

<SW No. 2>

SW contents Main	When remote controller power turned on
ON/OFF	Normally on/Timer mode on
Comment	When you want to return to the timer mode when the power is restored after a power failure when a Program timer is connected, select "Timer mode".

<SW No. 3>

SW contents Main	Cooling/heating display in AUTO mode
ON/OFF	Yes/No
Comment	When you do not want to display "Cooling" and "Heating" in the Auto mode, set to "No".

<SW No. 4>

SW contents Main	Intake temperature display
ON/OFF	Yes/No
Comment	When you do not want to display the intake temperature, set to "No".

7. Electrical work

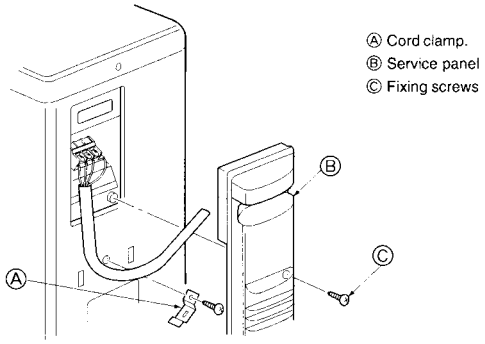

Fig. 7-8

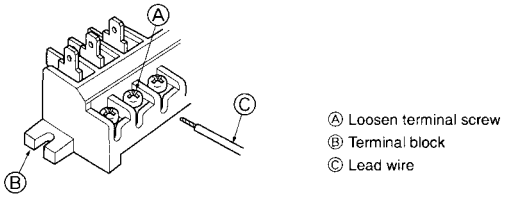

Fig. 7-9

7.4. Outdoor unit (Fig. 7-8)

- Connect cable from the indoor unit correctly on the terminal-block.
- Use the same terminal block and polarity as is used with the indoor unit.
- For aftercare maintenance, give extra length to connecting cable.

> - Both end of connecting cable (extension wire) are peeled off. When too long, or connected by cutting off the middle, peel off power supply cable to the size given in the figure.
> - Be careful not to contact connecting cable with piping.

⚠ Caution:
- **Use care not to make mis-wiring. (Fig. 7-9)**
- **Firmly tighten the terminal screws to prevent them from loosening.**
- **After tightening, pull the wires lightly to confirm that they do not move.**

⚠ Warning:
- **Be sure to attach the service panel of the outdoor unit securely. If it is not attached correctly, it could result in a fire or an electric shock due to dust, water, etc.**
- **Tighten terminal screws securely.**
- **Wiring should be done so that the power lines are not subject to tension. Otherwise, heat may be generated or fire may occur.**

8. Duct work

At the time of shippting from factory

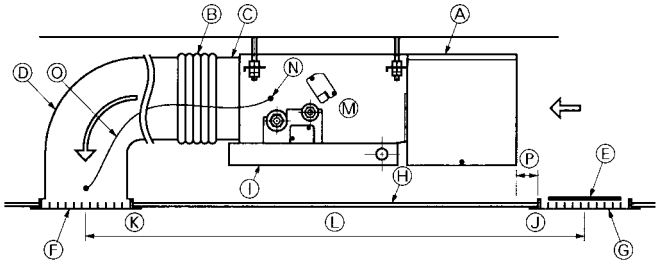

In case of bottom-side suction

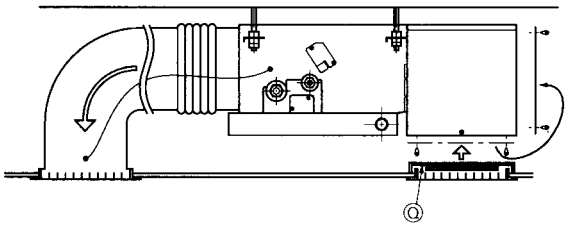

Remove the panel attached to the bottom side, and mount it on the rear side.

Fig. 8-1

Use the canvas duct for connecting the indoor unit and the duct. (Fig. 8-1)
Use fire-proof material for the duct parts.
Make sure that the duct has sufficient heat insulation.

Ⓐ Electrical parts box
Ⓑ Canvas duct
Ⓒ Air outlet flange
Ⓓ Air outlet duct
Ⓔ Air filter (procure locally)
Ⓕ Air outlet grille
Ⓖ Air intake grille
Ⓗ Ceiling
Ⓘ Drainage pan
Ⓙ Air intake
Ⓚ Air outlet
Ⓛ Allow clearance to avoid short cycling.
Ⓜ Indoor unit
Ⓝ Earth terminal
Ⓞ Earth cable
Ⓟ 850 mm or more
Ⓠ Safety net (procured locally)

Notes:
- **The fan and motor are dangerous if handled during operation. For this reason, be sure to install the indoor unit at least 850mm from the air intake grill Ⓖ.**
  If it is not possible to put more than 850 mm of distance between the air intake grill and the indoor unit, install the safety net Ⓠ (locally procured).
- **Connect the main body of the air conditioner and the duct so that their potentials are equal.**
- **Connect an earth cable Ⓞ from the air outlet flange Ⓒ to the earth terminal Ⓝ. Then, connect another earth cable Ⓞ from the earth terminal Ⓝ to the air outlet duct Ⓓ.**
- **Be sure to install an air filter (procure locally) and an air outlet duct.**

9. Air filter installation

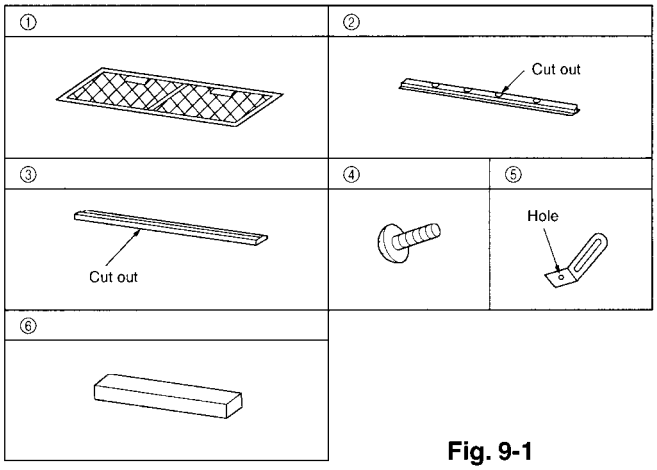

Fig. 9-1

9.1. Confirmation of enclosed parts (Fig. 9-1)

- Please ensure all the parts shown below are present before starting installation.
  - ① Filter × 1
  - ② Filter rail × 1
  - ③ Filter rail × 1
  - ④ ST. screw (4 × 10) × 14
  - ⑤ Clamp × 2
  - ⑥ Seal × 2

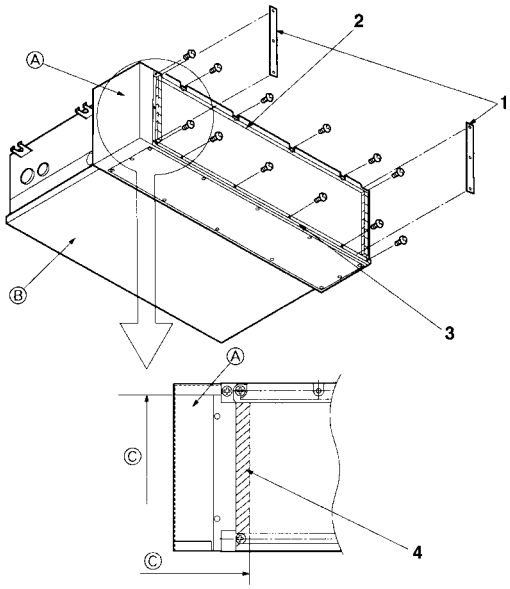

Fig. 9-2

9.2. Filter rail installation (Rear air intake) (Fig. 9-2)

■ Please select air intake direction A or B

1. Transportation support remove (Throw away).
2. Please attach filter rail ② as per the diagram (screw × 6).
   Please connect rails ② ③ carefully.
3. Please attach filter rail ③ as per the diagram (screw × 6).
   Please connect rails ② ③ carefully.
4. Seal ⑥
   Upright position here.
   - Ⓐ Control box
   - Ⓑ Drain pan
   - Ⓒ Air tight seal
     Level with edge

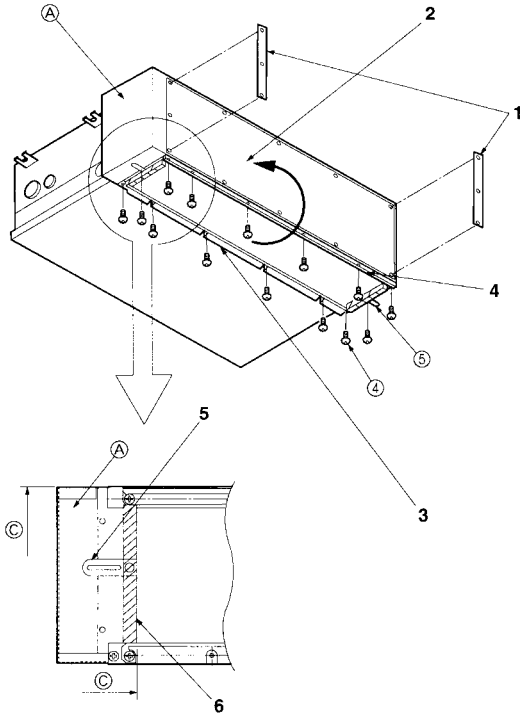

Fig. 9-3

9.3. Filter rail installation (Bottom air intake) (Fig. 9-3)

1. Transportation support remove (Throw away).
2. Please move the plate position. (Please use the screws removed.)
3. Please attach filter rail ② as per the diagram (screw × 6).
   Please connect rails ② ③ carefully.
4. Please attach filter rail ③ as per the diagram (screw × 6).
   Please connect rails ② ③ carefully.
5. Clamp ⑤ (Attach the clamps ⑤ with screw × 2)
   Upright position here.
6. Seal ⑥
   Upright position here.
   - Ⓐ Control box
   - Ⓒ Air tight seal
     Level with edge

9. Air filter installation

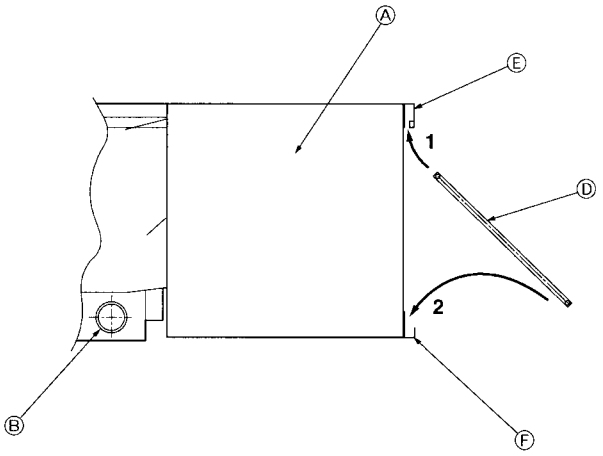

Fig. 9-4

9.4. Filter installation points (Rear air intake) (Fig. 9-4)

1. Insert the filter into rail ②
2. Hook the filter onto rail ③

Ⓐ Control box
Ⓑ Drain pan
Ⓓ Filter
Ⓔ Rail ②
Ⓕ Rail ③

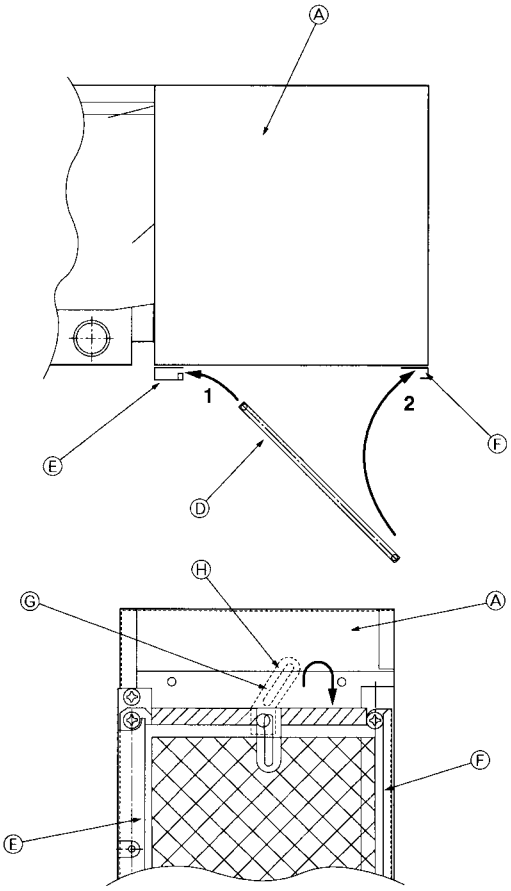

Fig. 9-5

9.5. Filter installation points (Bottom air intake) (Fig. 9-5)

1. Insert the filter into rail ②
2. Hook the filter onto rail ③
3. Bend the clamp to hold the filter.

Ⓐ Control box
Ⓓ Filter ①
Ⓔ Rail ②
Ⓕ Rail ③
Ⓖ Bend
Ⓗ Clamp ⑤

10.Test run

10.1. Before test run

▶ **After completing installation and the wiring and piping of the indoor and outdoor units, check for refrigerant leakage, looseness in the power supply or control wiring, wrong polarity, and no disconnection of one phase in the supply.**

▶ **Use a 500-volt megohmmeter to check that the resistance between the power supply terminals and ground is at least 1.0 MΩ.**

▶ **Do not carry out this test on the control wiring (low voltage circuit) terminals.**

⚠ **Warning:**

Do not use the air conditioner if the insulation resistance is less than 1.0 MΩ.

Insulation resistance

After installation or after the power source to the unit has been cut for an extended period, the insulation resistance will drop below 1 MΩ due to refrigerant accumulating in the compressor. This is not a malfunction. Perform the following procedures.

1. Remove the wires from the compressor and measure the insulation resistance of the compressor.
2. If the insulation resistance is below 1 MΩ, the compressor is faulty or the resistance dropped due the accumulation of refrigerant in the compressor.
3. After connecting the wires to the compressor, the compressor will start to warm up after power is supplied. After supplying power for the times indicated below, measure the insulation resistance again.
   - The insulation resistance drops due to accumulation of refrigerant in the compressor. The resistance will rise above 1 MΩ after the compressor is warmed up for two to three hours.
     (The time necessary to warm up the compressor varies according to atmospheric conditions and refrigerant accumulation.)
   - To operate the compressor with refrigerant accumulated in the compressor, the compressor must be warmed up at least 12 hours to prevent breakdown.
4. If the insulation resistance rises above 1 MΩ, the compressor is not faulty.

⚠ **Caution:**

- **The compressor will not operate unless the power supply phase connection is correct.**
- **Turn on the power at least 12 hours before starting operation.**
- Starting operation immediately after turning on the main power switch can result in severe damage to internal parts. Keep the power switch turned on during the operational season.

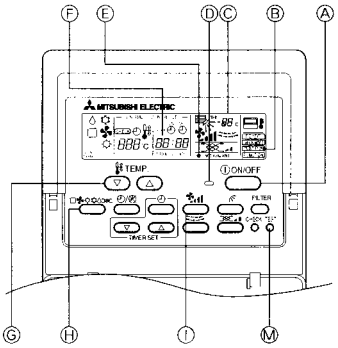

Fig. 10-1

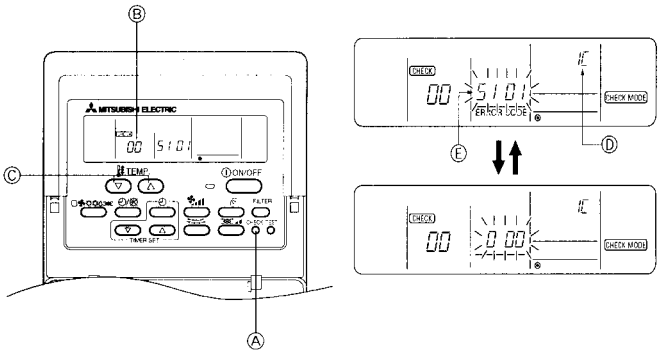

Fig. 10-2

10.2. Test run

The following 3 methods are available.

10.2.1. Using wired remote controller (Fig. 10-1)

① Turn on the power at least 12 hours before the test run.
② Press the [TEST] button twice. ➡ "TEST RUN" liquid crystal display
③ Press the [Mode selection] button. ➡ Make sure that wind is blown out.
④ Press the [Mode selection] button and switch to the cooling (or heating) mode.
➡ Make sure that cold (or warm) wind is blown out.
⑤ Press the [Fan speed] button. ➡ Make sure that the wind speed is switched.
⑥ Check operation of the outdoor unit fan.
⑦ Release test run by pressing the [ON/OFF] button. ➡ Stop
⑧ After the checks, always turn off the power.

Ⓐ ON/OFF button
Ⓑ Test run display
Ⓒ Indoor temperature liquid line temperature display
Ⓓ ON/OFF lamp
Ⓔ Power display
Ⓕ Error code display
Test run remaining time display
Ⓖ Set temperature button
Ⓗ Mode selection button
Ⓘ Fan speed button
Ⓜ TEST button

10.3. Self-check

10.3.1. Wired remote controller (Fig. 10-2)

① Turn on the power.
② Press the [CHECK] button twice.
③ Set refrigerant address with [TEMP] button if system control is used.
④ Press the [ON/OFF] button to stop the self-check.

Ⓐ CHECK button
Ⓑ Refrigerant address
Ⓒ TEMP button
Ⓓ IC: Indoor unit
OC: Outdoor unit
Ⓔ Check code

- For description of each check code, refer to the following table.

① Check code	Symptom
5101	Room temperature thermistor error
5102	RT12, 13 thermistor error
2503	Drain sensor error
2502	Drain pump error
1503	Freezing safeguard operation
0405, 1501, 4210, 5102	Outdoor unit error
6831~6834	Signal error between remote controller and indoor units
6800	Communication error between indoor and outdoor units
8000	No alarm history
F F F F	No unit

- On wired remote controller

① Check code displayed in the LCD.

10.Test run

10.4. AUTO RESTART FUNCTION

This model is equipped with the AUTO RESTART FUNCTION.
When the indoor unit is controlled with the remote controller, the operation mode, set temperature, and the fan speed are memorized by the indoor controller board. The auto restart function sets to work the moment the power has restored after power failure, then, the unit will restart automatically.

Notes:

- **The operation settings are memorized when 10 seconds have passed after the remote controller was operated.**
- **If the main power is turned off or a power failure occurs while AUTO START/STOP timer is active, the timer setting is cancelled. As this model is equipped with the auto restart function, the air conditioner should start operating at the same time that a power has restored.**
- **If the unit has been off with the remote controller before power failure, the auto restart function does not work as the power button of the remote controller is off.**
- **To prevent breaker off due to the rush of starting current, systematize other home appliance not to turn on at the same time.**

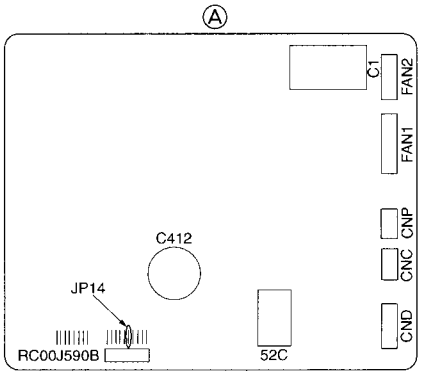

Fig. 10-3

10.5. Indoor temperature position change function (Fig. 10-3)

This model is equipped with the indoor temperature position change function. Detection of room temperature can be changed into remote controller's internal sensor.

① Power supply is turn off.
② Cut the JP14 jumper wire of the indoor controller board with a pair of nippers.
Ⓐ Indoor controller board

11.Maintenance

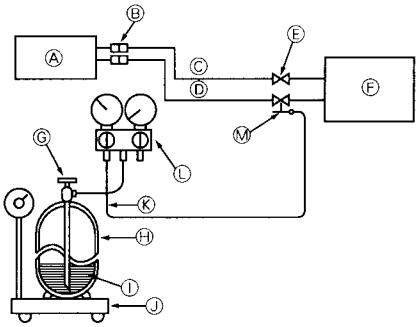

Ⓐ Indoor unit
Ⓑ Union
Ⓒ Liquid pipe
Ⓓ Gas pipe
Ⓔ Stop valve
Ⓕ Outdoor unit
Ⓖ Refrigerant gas cylinder operating valve
Ⓗ Refrigerant gas cylinder for R410A with siphon
Ⓘ Refrigerant (liquid)
Ⓙ Electronic scale for refrigerant charging
Ⓚ Charge hose (for R410A)
Ⓛ Gauge manifold valve (for R410A)
Ⓜ Service port

Fig. 11-1

11.1. Gas charge (Fig. 11-1)

1. **Connect gas cylinder to the service port of stop valve (3-way).**
2. **Execute air purge of the pipe (or hose) coming from refrigerant gas cylinder.**
3. **Replenish specified amount of refrigerant, while running the air conditioner for cooling.**

Note:
In case of adding refrigerant, comply with the quantity specified for the refrigerating cycle.

⚠ Caution:

- **Do not discharge the refrigerant into the atmosphere.**
  Take care not to discharge refrigerant into the atmosphere during installation, reinstallation, or repairs to the refrigerant circuit.
- **For additional charging, charge the refrigerant from liquid phase of the gas cylinder.**
  If the refrigerant is charged from the gas phase, composition change may occur in the refrigerant inside the cylinder and the outdoor unit. In this case, ability of the refrigerating cycle decreases or normal operation can be impossible. However, charging the liquid refrigerant all at once may cause the compressor to be locked. Thus, charge the refrigerant slowly.

To maintain the high pressure of the gas cylinder, warm the gas cylinder with warm water (under 40°C) during cold season. But never use naked fire or steam.

12.System control (Fig. 12-1)

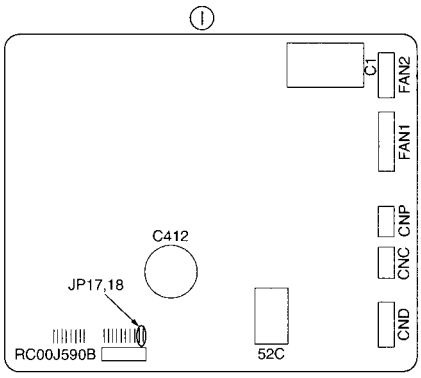

Ⓐ Outdoor unit
Ⓑ Indoor unit (only SEZ)
Ⓒ Master remote controller
Ⓓ Subordinate remote controller
Ⓔ Standard 1:1 (Refrigerant address = 00)
Ⓕ Simultaneous two groups (Refrigerant address = 01)
Ⓖ Simultaneous three groups (Refrigerant address = 02)
Ⓗ Simultaneous four groups (Refrigerant address = 03)
Ⓘ Indoor controller board.

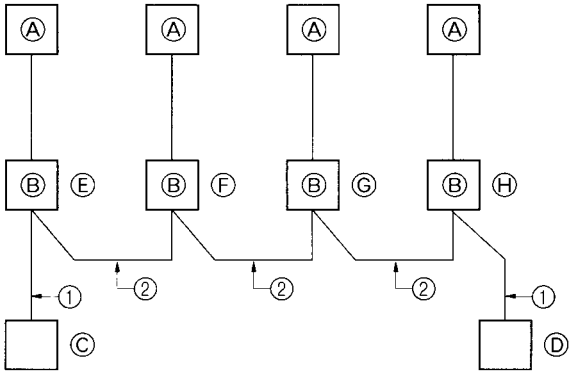

Fig. 12-1

① Wiring from the Remote Control
This wire is connected to terminal block for remote controller of the indoor unit (non-polar).
② When a Different Refrigerant System Grouping is Used.
Up to 4 refrigerant systems can be controlled as one group using the MA remote controller. There is need to set up JP17, JP18 jumper wire of indoor controller board.
Note:
In single refrigerant system, there in no need of wiring ②, and there is need to cut JP17, JP18 jumper wire of indoor controller board.
The total extention of remote control cable is a maximum of 100 m.

		JP17	JP18	
Ⓔ	Refrigerant address = 00	○ ○	○ ○	The setup at the time shipment. In single refrigerant system, there is no need to cut JP17, JP18.
Ⓕ	Refrigerant address = 01	○ ○	○ ○	Cut the JP17 jumper wire of indoor controller board with a pair of nipper.
Ⓖ	Refrigerant address = 02	○ ○	○ ○	Cut the JP18 jumper wire of indoor controller board with a pair of nipper.
Ⓗ	Refrigerant address = 03	○ ○	○ ○	Cut the JP17, JP18 jumper wire of indoor controller board with a pair of nipper.

B.2.10.2 SEZ-A09CR

3 — 3.1

[Fig. 3-1]

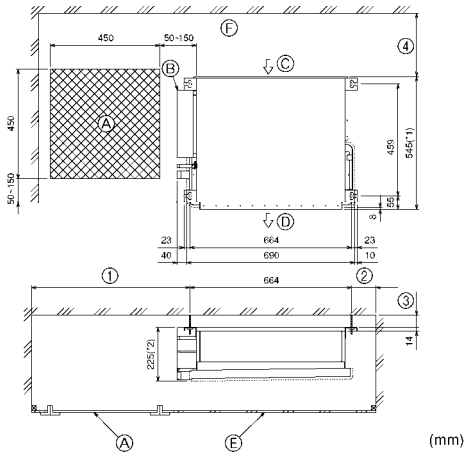

Ⓐ Access door
Ⓑ Electrical parts box
Ⓒ Air inlet
Ⓓ Air outlet
Ⓔ Ceiling surface
Ⓕ Service space

① 500 or more
② 100 or more
③ 20 or more
④ 300 or more

* If the optional long-life filter is installed, the dimensions of the air conditioner increase.
Rear inlet: Depth increases by 30 mm (*1)
Bottom inlet: Height increases by 30 mm (*2)

3.3

[Fig. 3-2]
■ SUZ-A09VR

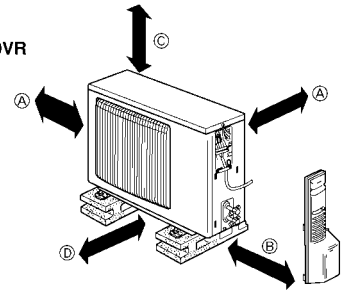

Ⓐ 100 mm or more
Ⓑ 350 mm or more
Ⓒ Basically open 100 mm or more without only obstruction in front and on both sides of the unit.
Ⓓ 200 mm or more (Open two sides of left, right, or rear side.)

4

[Fig. 4-1]

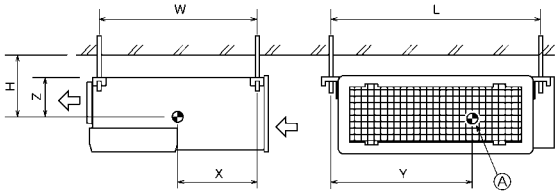

Ⓐ Center of gravity

5

[Fig. 5-1]

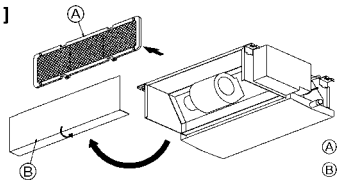

Ⓐ Filter
Ⓑ Bottom plate

[Fig. 5-2]

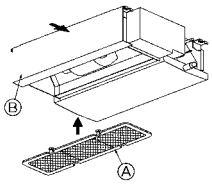

Ⓐ Filter
Ⓑ Bottom plate

6 — 6.1

[Fig. 6-1]

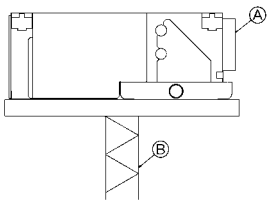

Ⓐ Unit body
Ⓑ Lifting machine

[Fig. 6-2]

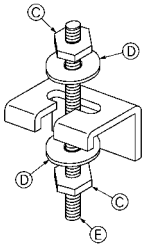

Ⓒ Nuts (field supply)
Ⓓ Washers (field supply)
Ⓔ M10 hanging bolt (field supply)

6.2

[Fig. 6-3]

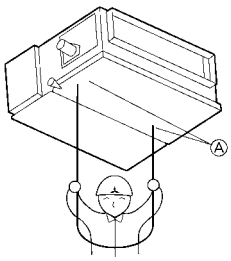

Ⓐ Indoor unit's bottom surface

7

7.1

[Fig. 7-1]

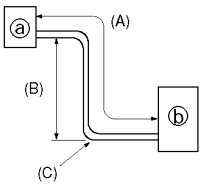

ⓐ Indoor unit
ⓑ Outdoor unit

[Fig. 7-2]

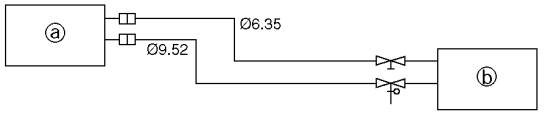

ⓐ Indoor unit
ⓑ Outdoor unit

7.2

[Fig. 7-3]

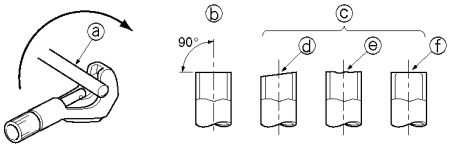

ⓐ Copper tubes
ⓑ Good
ⓒ No good
ⓓ Tilted
ⓔ Uneven
ⓕ Burred

[Fig. 7-4]

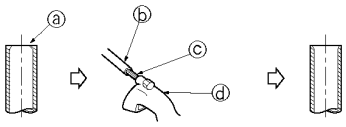

ⓐ Burr
ⓑ Copper tube/pipe
ⓒ Spare reamer
ⓓ Pipe cutter

[Fig. 7-5]

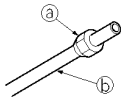

ⓐ Flare nut
ⓑ Copper tube

[Fig. 7-6]

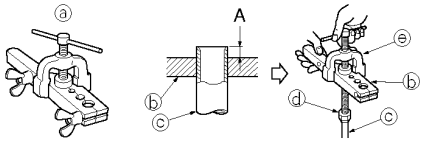

ⓐ Flaring tool
ⓑ Die
ⓒ Copper tube
ⓓ Flare nut
ⓔ Yoke

[Fig. 7-7]

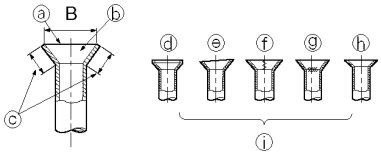

ⓐ Smooth all around
ⓑ Inside is shining without any scratches
ⓒ Even length all around
ⓓ Too much
ⓔ Tilted
ⓕ Scratch on flared plane
ⓖ Cracked
ⓗ Uneven
ⓘ Bad examples

7.3

[Fig. 7-8]

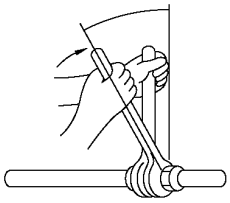

[Fig. 7-9]

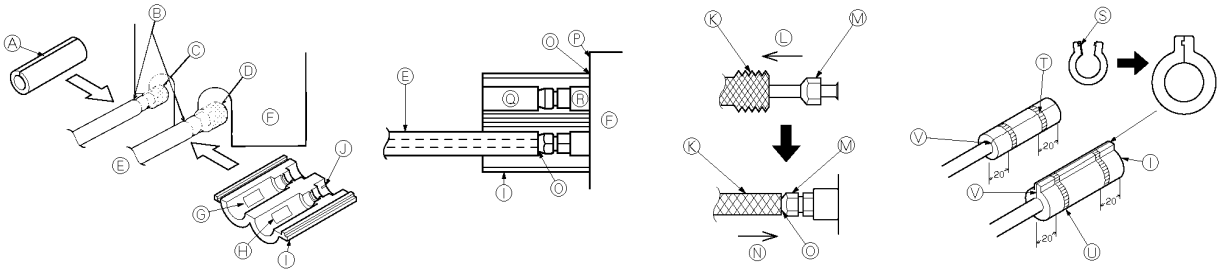

Ⓐ Thermal insulation tubing 1
Ⓑ Caution:
Pull out the thermal insulation on the refrigerant piping at the site, insert the flare nut to flare the end, and replace the insulation in its original position.
Take care to ensure that condensation does not form on exposed copper piping.
Ⓒ Liquid end of refrigerant piping
Ⓓ Gas end of refrigerant piping
Ⓔ Site refrigerant piping
Ⓕ Main body
Ⓖ Marked "GAS"
Ⓗ Marked "OUTSIDE"
Ⓘ Flared insulation (supplied) 1
Ⓙ Marked "INSIDE"
Ⓚ Thermal insulation
Ⓛ Pull
Ⓜ Flare nut
Ⓝ Return to original position
Ⓞ Ensure that there is no gap here
Ⓟ Plate on main body
Ⓠ Outside
Ⓡ Inside
Ⓢ Remove tape
Ⓣ Thermal insulation tubing (small) (supplied) 2
Ⓤ Tie (large) (supplied) 4
Ⓥ Ensure that there is no gap here. Place join upwards.

7.5

[Fig. 7-10]

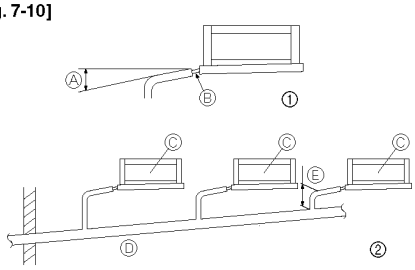

Ⓐ Downward slope 1/100 or more
Ⓑ Connection dia. R1 external thread
Ⓒ Indoor unit
Ⓓ Collective piping
Ⓔ Maximize this length to approx. 10 cm

8

[Fig. 8-1]

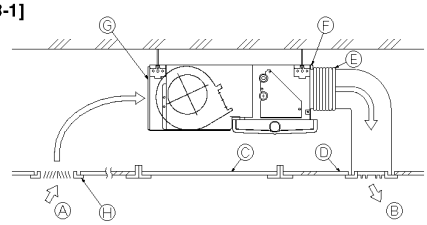

Ⓐ Air inlet
Ⓑ Air outlet
Ⓒ Access door
Ⓓ Ceiling surface
Ⓔ Canvas duct
Ⓕ Connect common reference potential wire between duct-work to air conditioner.
Ⓖ Air filter
Ⓗ Inlet grille

9

9.1

[Fig. 9-1] (1) 1:1 SYSTEM (2) MULTI SYSTEM

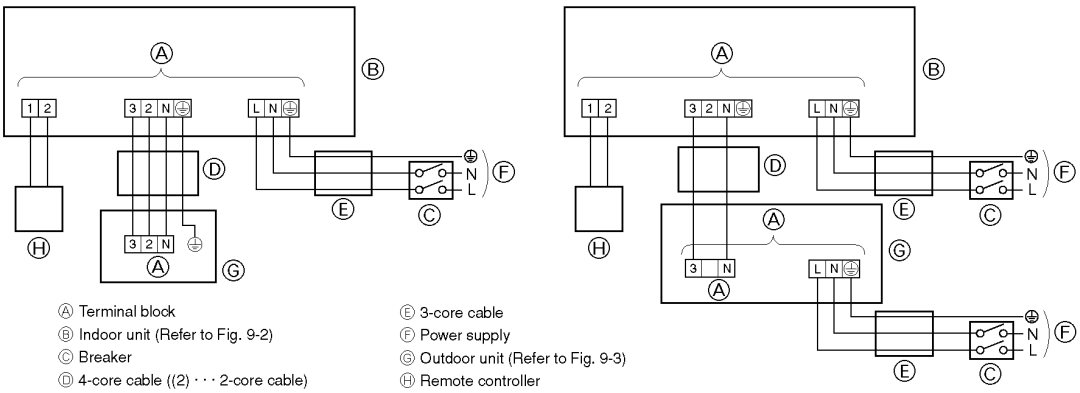

Ⓐ Terminal block
Ⓑ Indoor unit (Refer to Fig. 9-2)
Ⓒ Breaker
Ⓓ 4-core cable ((2) · · · 2-core cable)
Ⓔ 3-core cable
Ⓕ Power supply
Ⓖ Outdoor unit (Refer to Fig. 9-3)
Ⓗ Remote controller

9.2

[Fig. 9-2]

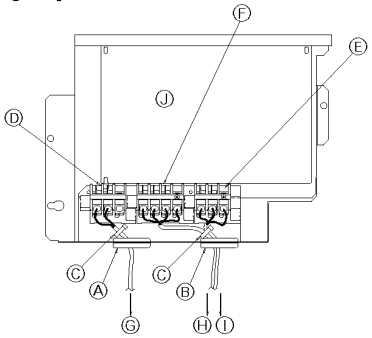

Ⓐ Entry for remote controller cable
Ⓑ Entry for power supply cable and Indoor-Outdoor connecting cable
Ⓒ Cable clamp
Ⓓ Remote controller terminal
Ⓔ Power supply terminal
Ⓕ Indoor/Outdoor unit connecting terminal
Ⓖ To remote controller
Ⓗ To power supply source
Ⓘ To outdoor unit
Ⓙ Indoor controller

[Fig. 9-3]

(1) 1:1 SYSTEM (2) MULTI SYSTEM

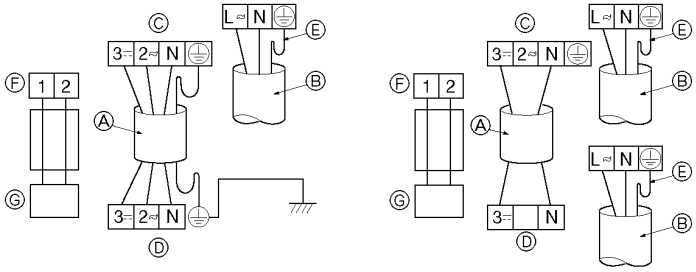

Ⓐ Connecting cable
4 core VVF cable
1.0 mm² or more
Colors
N : Blue
2 : Brown
3 : Red
⏚ : Green/Yellow

Ⓑ Power supply cable
3 core with ground IEC cord
1.0 mm² or more
Colors
N : Blue
L : Brown
⏚ : Green/Yellow

Ⓒ Indoor
Ⓓ Outdoor
Ⓔ Always install an earth longer than other cables
Ⓕ Remote controller cable
Wire No × size (mm²) : Cable 2C × 0.69
This wire accessory of remote controller (wire length : 10m, non-polar)
Ⓖ Remote controller

[Fig. 9-4]

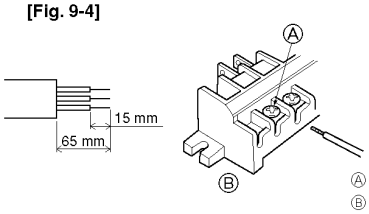

Ⓐ Loosen terminal screw
Ⓑ Terminal bed

9.3

[Fig. 9-5]

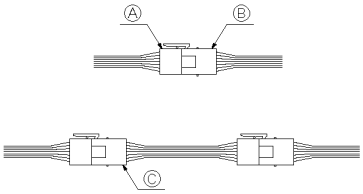

Ⓐ Terminal bed box connector (White)
Ⓑ Motor connector (White)
Ⓒ Attachment connector (Blue) (Accessory)

9.4

[Fig. 9-6]

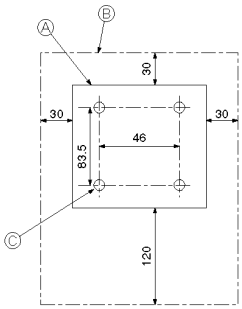

Ⓐ Remote controller profile
Ⓑ Required clearances surrounding the remote controller
Ⓒ Installation pitch

9 — 9.4

[Fig. 9-7]

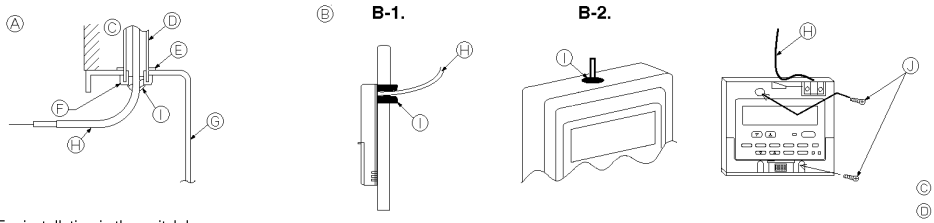

Ⓐ For installation in the switch box:
Ⓑ For direct installation on the wall select one of the following:
- Prepare a hole through the wall to pass the remote controller cord (in order to run the remote controller cord from the back), then seal the hole with putty.
- Run the remote controller cord through the cut-out upper case, then seal the cut-out notch with putty similarly as above.

Ⓒ Wall
Ⓓ Conduit
Ⓔ Lock nut
Ⓕ Bushing
Ⓖ Switch box
Ⓗ Remote controller cord
Ⓘ Seal with putty
Ⓙ Wood screw

[Fig. 9-8]

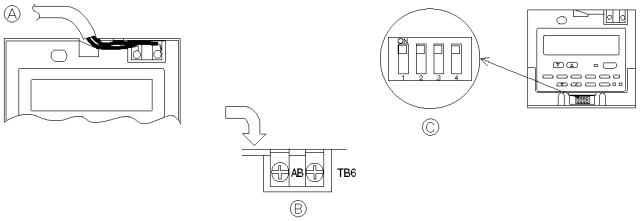

Ⓐ To the terminal block on the indoor unit
Ⓑ TB6 (No polarity)
Ⓒ Dip switches

9.5

[Fig. 9-9]

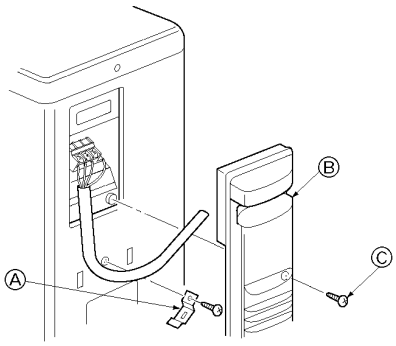

Ⓐ Cord clamp.
Ⓑ Service panel
Ⓒ Fixing screws

[Fig. 9-10]

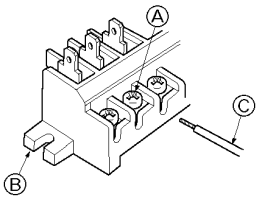

Ⓐ Loosen terminal screw
Ⓑ Terminal block
Ⓒ Lead wire

10 — 10.2

[Fig. 10-1]

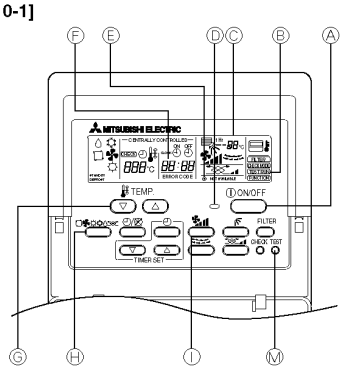

Ⓐ ON/OFF button
Ⓑ Test run display
Ⓒ Indoor temperature liquid line temperature display
Ⓓ ON/OFF lamp
Ⓔ Power display
Ⓕ Error code display
Test run remaining time display
Ⓖ Set temperature button
Ⓗ Mode selection button
Ⓘ Fan speed button
Ⓜ TEST button

10.3

[Fig. 10-2]

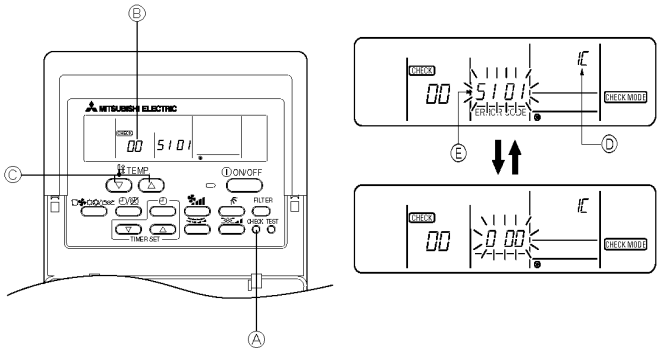

Ⓐ CHECK button
Ⓑ Refrigerant address
Ⓒ TEMP. button
Ⓓ IC: Indoor unit
OC: Outdoor unit
Ⓔ Check code

10 10.5

[Fig. 10-3]

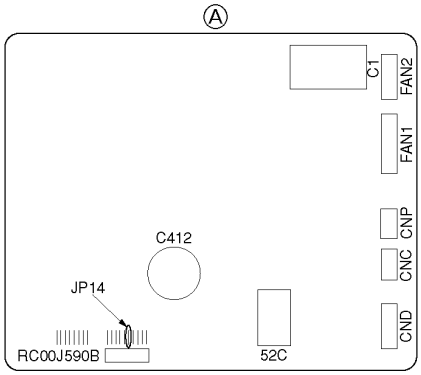

Ⓐ Indoor controller board

11 11.1

[Fig. 11-1]

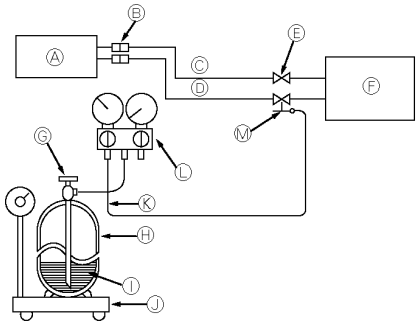

Ⓐ Indoor unit
Ⓑ Union
Ⓒ Liquid pipe
Ⓓ Gas pipe
Ⓔ Stop valve
Ⓕ Outdoor unit
Ⓖ Refrigerant gas cylinder operating valve
Ⓗ Refrigerant gas cylinder for R410A with siphon
Ⓘ Refrigerant (liquid)
Ⓙ Electronic scale for refrigerant charging
Ⓚ Charge hose (for R410A)
Ⓛ Gauge manifold valve (for R410A)
Ⓜ Service port

12

[Fig. 12-1]

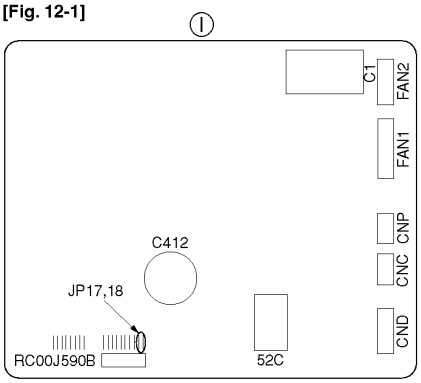

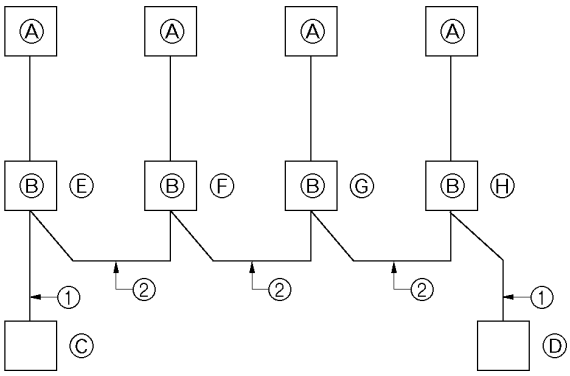

Ⓐ Outdoor unit
Ⓑ Indoor unit (only SEZ)
Ⓒ Master remote controller
Ⓓ Subordinate remote controller
Ⓔ Standard 1:1 (Refrigerant address = 00)
Ⓕ Simultaneous two groups (Refrigerant address = 01)
Ⓖ Simultaneous three groups (Refrigerant address = 02)
Ⓗ Simultaneous four groups (Refrigerant address = 03)
Ⓘ Indoor controller board.

1. Safety precautions

- **Please report to or take consent by the supply authority before connection to the system.**
- **Be sure to read "The following should always be observed for safety" before installing the air conditioner.**
- **Be sure to observe the cautions specified here as they include important items related to safety.**
- **The indications and meanings are as follows.**

⚠ Warning:
Could lead to death, serious injury, etc.

⚠ Caution:
Could lead to serious injury in particular environments when operated incorrectly.

- **After reading this manual, be sure to keep it together with the instruction manual in a handy place on the customer's site.**

⃠ : Indicates an action that must be avoided.
: Indicates that important instructions must be followed.
: Indicates a part which must be grounded.
: Indicates that caution should be taken with rotating parts.
: Indicates that the main switch must be turned off before servicing.
: Beware of electric shock.
: Beware of hot surface.

⚠ Warning:
Carefully read the labels affixed to the main unit.

⚠ Warning:

- **Do not install it by yourself (customer).**
  Incomplete installation could cause injury due to fire, electric shock, the unit falling or leakage of water. Consult the dealer from whom you purchased the unit or special installer.
- **Install the unit securely in a place which can bear the weight of the unit.**
  When installed in an insufficient strong place, the unit could fall causing injured.
- **Use the specified wires to connect the indoor and outdoor units securely and attach the wires firmly to the terminal board connecting sections so the stress of the wires is not applied to the sections.**
  Incomplete connecting and fixing could cause fire.
- **Do not use intermediate connection of the power cord or the extension cord and do not connect many devices to one AC outlet.**
  It could cause a fire or an electric shock due to defective contact, defective insulation, exceeding the permissible current, etc.
- **Check that the refrigerant gas does not leak after installation has completed.**
- **Perform the installation securely referring to the installation manual.**
  Incomplete installation could cause a personal injury due to fire, electric shock, the unit falling or leakage of water.
- **Perform electrical work according to the installation manual and be sure to use an exclusive circuit.**
  If the capacity of the power circuit is insufficient or there is incomplete electrical work, it could result in a fire or an electric shock.
- **Attach the electrical part cover to the indoor unit and the service panel to the outdoor unit securely.**
  If the electrical part cover in the indoor unit and/or the service panel in the outdoor unit are not attached securely, it could result in a fire or an electric shock due to dust, water, etc.
- **Be sure to use the part provided or specified parts for the installation work.**
  The use of defective parts could cause an injury or leakage of water due to a fire, an electric shock, the unit falling, etc.
- **Ventilate the room if refrigerant leaks during operation.**
  If the refrigerant comes in contact with a flame, poisonous gases will be released.

⚠ Caution:

- **Perform grounding.**
  Do not connect the ground wire to a gas pipe, water pipe arrester or telephone ground wire. Defective grounding could cause an electric shock.
- **Do not install the unit in a place where an inflammable gas leaks.**
  If gas leaks and accumulates in the area surrounding the unit, it could cause an explosion.
- **Install a ground leakage breaker depending on the installation place (where it is humid).**
  If a ground leakage breaker is not installed, it could cause an electric shock.
- **Perform the drainage/piping work securely according to the installation manual.**
  If there is a defect in the drainage/piping work, water could drop from the unit and household goods could be wet and damaged.
- **Fasten a flare nut with a torque wrench as specified in this manual.**
  When fastened too tight, a flare nut may broken after a long period and cause a leakage of refrigerant.

2. Selecting the installation location

2.1. Indoor unit

- Where airflow is not blocked.
- Where cool air spreads over the entire room.
- Where it is not exposed to direct sunshine.
- At a distance 1 m or more away from your TV and radio (to prevent picture from being distorted or noise from being generated).
- In a place as far away as possible from fluorescent and incandescent lights (so the infrared remote control can operate the air conditioner normally).
- Where the air filter can be removed and replaced easily.

⚠ Warning:
Mount the indoor unit into a ceiling strong enough to withstand the weight of the unit.

2.2. Outdoor unit

- Where it is not exposed to strong wind.
- Where airflow is good and dustless.
- Where it is not exposed to rain and direct sunshine.
- Where neighbours are not annoyed by operation sound or hot air.
- Where rigid wall or support is available to prevent the increase of operation sound or vibration.
- Where there is no risk of combustible gas leakage.
- When installing the unit at a high level, be sure to fix the unit legs.
- Where it is at least 3 m away from the antenna of TV set or radio. (Otherwise, images would be disturbed or noise would be generated.)
- Install the unit horizontally.

⚠ Caution:
Avoid the following places for installation where air conditioner trouble is liable to occur.

- **Where there is too much machine oil.**
- **Salty environment as seaside areas.**
- **Hot-spring areas.**
- **Where sulfide gas exists.**
- **Other special atmospheric areas.**

3. Selecting an installation site & Accessories

- Select a site with sturdy fixed surface sufficiently durable against the weight of unit.
- Before installing unit, the routing to carry in unit to the installation site should be determined.
- Select a site where the unit is not affected by entering air.
- Select a site where the flow of supply and return air is not blocked.
- Select a site where refrigerant piping can easily be led to the outside.
- Select a site which allows the supply air to be distributed fully in room.
- Do not install unit at a site with oil splashing or steam in much quantity.
- Do not install unit at a site where combustible gas may generate, flow in, stagnate or leak.
- Do not install unit at a site where equipment generating high frequency waves (a high frequency wave welder for example) is provided.
- Do not install unit at a site where fire detector is located at the supply air side. (Fire detector may operate erroneously due to the heated air supplied during heating operation.)
- When special chemical product may scatter around such as site chemical plants and hospitals, full investigation is required before installing unit. (The plastic components may be damaged depending on the chemical product applied.)
- If the unit is run for long hours when the air above the ceiling is at high temperature/ high humidity (due point above 26 °C), due condensation may be produced in the indoor unit. When operating the units in this condition, add insulation material (10-20 mm) to the entire surface of the indoor unit to avoid due condensation.

3.1. Install the indoor unit on a ceiling strong enough to sustain its weight

[Fig. 3-1]

Ⓐ Access door
Ⓑ Electrical parts box
Ⓒ Air inlet
Ⓓ Air outlet
Ⓔ Ceiling surface
Ⓕ Service space
① 500 or more
② 100 or more
③ 20 or more
④ 300 or more

* If the optional long-life filter is installed, the dimensions of the air conditioner increase.
Rear inlet: Depth increases by 30 mm (*1)
Bottom inlet: Height increases by 30 mm (*2)

⚠ **Warning:**
The unit must be securely installed on a structure that can sustain its weight. If the unit is mounted on an unstable structure, it may fall down causing injuries.

3.2. Securing installation and service space

- Select the optimum direction of supply airflow according to the configuration of the room and the installation position.
- As the piping and wiring are connected at the bottom and side surfaces, and the maintenance is made at the same surfaces, allow a proper space properly. For the efficient suspension work and safety, provide a space as much as possible.

3.3 Outdoor unit

Ventilation and service space

■ SUZ-A09VR

[Fig. 3-2]

Ⓐ 100 mm or more
Ⓑ 350 mm or more
Ⓒ Basically open 100 mm or more without only obstruction in front and on both sides of the unit.
Ⓓ 200 mm or more (Open two sides of left, right, or rear side.)

When the piping is to be attached to a wall containing metals (tin plated) or metal netting, use a chemically treated wooden piece 20 mm or thicker between the wall and the piping or wrap 7 to 8 turns of insulation vinyl tape around the piping.

Units should be installed by licensed contractor accordingly to local code requirement.

3.4. Indoor unit accessories

The unit is provided with the following accessories:

No.	Name	Quantity
①	Attachment connector	1
②	Remote controller parts	1
③	Remote controller cable	1

4. Fixing hanging bolts

4.1 Fixing hanging bolts

[Fig. 4-1]

Ⓐ Center of gravity

(Give site of suspension strong structure.)

Hanging structure

- Ceiling: The ceiling structure varies from building to one another. For detailed information, consult your construction company.
- If necessary, reinforce the hanging bolts with anti-quake supporting members as countermeasures against earthquakes.
  *Use M10 for hanging bolts and anti-quake supporting members (field supply).

① Reinforcing the ceiling with additional members (edge beam, etc.) must be required to keep the ceiling at level and to prevent the ceiling from vibrations.

② Cut and remove the ceiling members.

③ Reinforce the ceiling members, and add other members for fixing the ceiling boards.

Center of gravity and Product Weight

Model name	W	L	H	X	Y	Z	Product Weight (kg)
SEZ-A09CR	459	664	115	230	402	95	19

5. Changing Bottom Inlet Specifications

1. Remove filter Ⓐ (6 screws).
2. Remove the bottom plate Ⓑ (6 screws) and bend the slit portion inwards at a right angle.

[Fig. 5-1]

Ⓐ Filter
Ⓑ Bottom plate

⚠ **Caution:**
When bending the bottom plate, be sure to protect yourself from its edges.

3. Fit the bottom plate Ⓑ to the rear of the main body.
4. Fit filter Ⓐ to the underside of the main body (6 screws).

[Fig. 5-2]

Ⓐ Filter
Ⓑ Bottom plate

6. Installing the unit

6.1. Hanging the unit body

▶ **Bring the indoor unit to an installation site as it is packed.**
▶ **To hang the indoor unit, use a lifting machine to lift and pass through the hanging bolts.**

[Fig. 6-1]

Ⓐ Unit body
Ⓑ Lifting machine

[Fig. 6-2]

Ⓒ Nuts (field supply)
Ⓓ Washers (field supply)
Ⓔ M10 hanging bolt (field supply)

6.2. Confirming the unit's position and fixing hanging bolts

▶ **Use the gage supplied with the panel to confirm that the unit body and hanging bolts are positioned in place. If they are not positioned in place, it may result in dew drops due to wind leak. Be sure to check the positional relationship.**
▶ **Use a level to check that the surface indicated by Ⓐ is at level. Ensure that the hanging bolt nuts are tightened to fix the hanging bolts.**
▶ **To ensure that drain is discharged, be sure to hang the unit at level using a level.**

[Fig. 6-3]

Ⓐ Indoor unit's bottom surface

6. Installing the unit

⚠ **Caution:**
Be sure to install the unit body at level.

7. Refrigerant piping work

7.1. Refrigerant pipe

[Fig. 7-1]
ⓐ Indoor unit
ⓑ Outdoor unit

[Fig. 7-2]
ⓐ Indoor unit
ⓑ Outdoor unit

Maximum difference between heights of indoor unit and outdoor unit, the length of refrigerant piping and the number of bends in piping are within limits shown below.

Models	(A) Pipe length (one way)	(B) Height difference	(C) Number of bends (one way)
SEZ-A09CR	max. 20 m	max. 12 m	max. of 10

*1: Height difference limitations are binding regardless of which unit, indoor or outdoor, is positioned higher.

Avoid the following places for installation where air conditioner trouble is liable to occur.
- Where there is too much oil such as for machine or cooking.
- Salty environment as seaside areas.
- Hot-spring areas.
- Where sulfide gas exists.
- Other special atmospheric areas.
- This unit has flared connections on both indoor and outdoor sides. (Fig. 7-2)
- Refrigerant pipes are used to connect the indoor and outdoor units as shown in the figure below.
- Insulate both refrigerant and drainage piping completely to prevent condensation.
- Refrigerant adjustment … If pipe length exceeds 7 m, additional refrigerant (R410A) charge is required.
  (The outdoor unit is charged with refrigerant for 7 m pipe length.)

Pipe length	7 m maximum	No additional charge required	–	
	Exceeding 7 m	Additional charge required	Refrigerant to be added	30g/m

Piping preparation
- Refrigerant pipes of 3, 5, 7, 10 and 15 m are available as optional items.

(1) Table below shows the specifications of pipes commercially available.

Model	Pipe	Outside diameter		Min wall thickness	Insulation thickness	Insulation material
		mm	inch			
SEZ-A09CR	For liquid	6.35	1/4	0.8 mm	8 mm	Heat resisting foam plastic 0.045 specific gravity
	For gas	9.52	3/8	0.8 mm	8 mm	

(2) Ensure that the 2 refrigerant pipes are well insulated to prevent condensation.

(3) Refrigerant pipe bending radius must be 10 cm or more.

⚠ **Caution:**
Using careful insulation of specified thickness. Excessive thickness prevents storage behind the indoor unit and smaller thickness causes dew drippage.

7.2. Flaring work
- Main cause of gas leakage is defect in flaring work.
  Carry out correct flaring work in the following procedure.

7.2.1. Pipe cutting

[Fig. 7-3]
ⓐ Copper tubes
ⓑ Good
ⓒ No good
ⓓ Tilted
ⓔ Uneven
ⓕ Burred
- Using a pipe cutter cut the copper tube correctly.

7.2.2. Burrs removal

[Fig. 7-4]
ⓐ Burr
ⓑ Copper tube/pipe
ⓒ Spare reamer
ⓓ Pipe cutter
- Completely remove all burrs from the cut cross section of pipe/tube.
- Put the end of the copper tube/pipe to downward direction as you remove burrs in order to avoid burrs drop in the tubing.

7.2.3. Putting nut on

[Fig. 7-5]
ⓐ Flare nut
ⓑ Copper tube
- Remove flare nuts attached to indoor and outdoor unit, then put them on pipe/tube having completed burr removal.
  (not possible to put them on after flaring work)

7.2.4. Flaring work

[Fig. 7-6]
ⓐ Flaring tool
ⓑ Die
ⓒ Copper tube
ⓓ Flare nut
ⓔ Yoke
- Carry out flaring work using flaring tool as shown below.

Pipe diameter (mm)	Dimension	
	A (mm) When the tool for R410A is used Clutch type	$B^{+0}_{-0.4}$ (mm)
6.35	0 - 0.5	9.1
9.52	0 - 0.5	13.2
12.7	0 - 0.5	16.6
15.88	0 - 0.5	19.7

Firmly hold copper tube in a die in the dimension shown in the table at above.

7.2.5. Check

[Fig. 7-7]
ⓐ Smooth all around
ⓑ Inside is shining without any scratches
ⓒ Even length all around
ⓓ Too much
ⓔ Tilted
ⓕ Scratch on flared plane
ⓖ Cracked
ⓗ Uneven
ⓘ Bad examples
- Compare the flared work with a figure in right side hand.
- If flare is noted to be defective, cut off the flared section and do flaring work again.

7.3. Pipe connection

[Fig. 7-8]
- Apply a thin coat of refrigeration oil on the seat surface of pipe.
- For connection first align the center, then tighten the first 3 to 4 turns of flare nut.
- Use tightening torque table below as a guideline for indoor unit side union joint section, and tighten using two wrenches. Excessive tightening damages the flare section.

Copper pipe O.D. (mm)	Flare nut O.D. (mm)	Tightening torque (N·m)
ø6.35	17	14 - 18
ø9.52	22	34 - 42
ø12.7	26	49 - 61
ø15.88	29	68 - 82

⚠ **Warning:**
Be careful of flying flare nut! (Internally pressurized)
Remove the flare nut as follows:
1. **Loosen the nut until you hear a hissing noise.**
2. **Do not remove the nut until the gas has been completely released (i.e., hissing noise stops).**
3. **Check that the gas has been completely released, and then remove the nut.**

Outdoor unit connection
Connect pipes to stop valve pipe joint of the outdoor unit in the same manner applied for indoor unit.
- For tightening use a torque wrench or spanner, and use the same tightening torque applied for indoor unit.

7. Refrigerant piping work

Refrigerant pipe insulation

- After connecting refrigerant piping, insulate the joints (flared joints) with thermal insulation tubing as shown below.

[Fig. 7-9]

Ⓐ Thermal insulation tubing 1
Ⓑ Caution:
Pull out the thermal insulation on the refrigerant piping at the site, insert the flare nut to flare the end, and replace the insulation in its original position.
Take care to ensure that condensation does not form on exposed copper piping.
Ⓒ Liquid end of refrigerant piping
Ⓓ Gas end of refrigerant piping
Ⓔ Site refrigerant piping
Ⓕ Main body
Ⓖ Marked "GAS"
Ⓗ Marked "OUTSIDE"
Ⓘ Flared insulation (supplied) 1
Ⓙ Marked "INSIDE"
Ⓚ Thermal insulation
Ⓛ Pull
Ⓜ Flare nut
Ⓝ Return to original position
Ⓞ Ensure that there is no gap here
Ⓟ Plate on main body
Ⓠ Outside
Ⓡ Inside
Ⓢ Remove tape
Ⓣ Thermal insulation tubing (small) (supplied) 2
Ⓤ Tie (large) (supplied) 4
Ⓥ Ensure that there is no gap here. Place join upwards.

1. Remove and discard the rubber bung which is inserted in the end of the unit piping.
2. Flare the end of the site refrigerant piping.
3. Pull out the thermal insulation on the site refrigerant piping and replace the insulation in its original position.

Cautions On Refrigerant Piping

- ▶ **Be sure to use non-oxidative brazing for brazing to ensure that no foreign matter or moisture enter into the pipe.**
- ▶ **Be sure to apply refrigerating machine oil over the flare connection seating surface and tighten the connection using a double spanner.**
- ▶ **Provide a metal brace to support the refrigerant pipe so that no load is imparted to the indoor unit end pipe. This metal brace should be provided 50 cm away from the indoor unit's flare connection.**

7.4. Purging procedures leak test

PURGING PROCEDURES

↓

Connect the refrigerant pipes (both the liquid and gas pipes) between the indoor and the outdoor units.

↓

Remove the service port cap of the stop valve on the side of the outdoor unit gas pipe. (The stop valve will not work in its initial state fresh out of the factory (totally closed with cap on).)

↓

Connect the gage manifold valve and the vacuum pump to the service port of the stop valve on the gas pipe side of the outdoor unit.

↓

Run the vacuum pump. (Vacuumize for more than 15 minutes.)

↓

Check the vacuum with the gage manifold valve, then close the gage manifold valve, and stop the vacuum pump.

↓

Leave it as is for one or two minutes. Make sure the pointer of the gage manifold valve remains in the same position. Confirm that the pressure gage show -0.101MPa (-760 mmHg).

↓

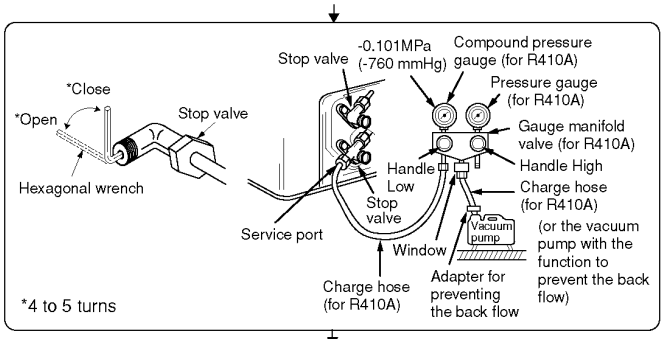

↓

Remove the gage manifold valve quickly from the service port of the stop valve.

↓

After refrigerant pipes are connected and evacuated, fully open all stop valves on gas and liquid pipe sides.
Operating without fully opening lowers the performance and causes trouble.

↓

Pipe length : 7 m maximum No gas charge is needed.	Pipe length exceeding 7 m Charge the prescribed amount of gas.

↓

Tighten the cap to the service port to obtain the initial status.

↓

Retighten the cap

↓

Leak test

7.5. Drain piping work

1. Ensure that the drain piping is downward (pitch of more than 1/100) to the outdoor (discharge) side. Do not provide any trap or irregularity on the way. (①)
2. Ensure that any cross-wise drain piping is less than 20 m (excluding the difference of elevation). If the drain piping is long, provide metal braces to prevent it from waving. Never provide any air vent pipe. Otherwise drain may be ejected.
3. Use a hard vinyl chloride pipe VP-25 (with an external diameter of 32 mm) for drain piping.
4. Ensure that collected pipes are 10 cm lower than the unit body's drain port as shown in ②.
5. Do not provide any odor trap at the drain discharge port.
6. Put the end of the drain piping in a position where no odor is generated.
7. Do not put the end of the drain piping in any drain where ionic gases are generated.

[Fig. 7-10]

Ⓐ Downward slope 1/100 or more
Ⓑ Connection dia. R1 external thread
Ⓒ Indoor unit
Ⓓ Collective piping
Ⓔ Maximize this length to approx. 10 cm

8. Duct work

- When connecting ducts, insert a canvas duct between the main body and the duct.
- Use non-combustible duct components.

⚠ **Caution:**

- **The noise from the intake will increase dramatically if intake Ⓐ is fitted directly beneath the main body. Intake Ⓐ should therefore be installed as far away from the main body as possible.**
  Particular care is required when using it with bottom inlet specifications.
- **Install sufficient thermal insulation to prevent condensation forming on outlet duct flanges and outlet ducts.**
- **To connect the air conditioner main body and the duct for potential equalization.**
- **Keep the distance between the inlet grille and the fan over 850 mm. If it is less than 850 mm, install a safety guard not to touch the fan.**

[Fig. 8-1]

Ⓐ Air inlet
Ⓑ Air outlet
Ⓒ Access door
Ⓓ Ceiling surface
Ⓔ Canvas duct
Ⓕ Connect common reference potential wire between duct-work to air conditioner.
Ⓖ Air filter
Ⓗ Inlet grille

9. Electrical work

9.1. Power supply

Electrical specification	Input capacity Main Switch/Fuse (A)
Power supply (1 phase ~/N, 220-240V)	10

⚠ **Warning:**

- **Do not use intermediate connection of the power cord, etc. or an extension cord or connect many devices to one AC outlet. It could cause a fire or electric shock due to defective contact, defective insulation, exceeding the permissible current, etc.**
- **Supply power should be taken from independently branched circuit. If not, it could cause a fire.**
- **A switch with at least 3 mm contact separation in each pole shall be provided by the air conditioner installation.**

[Fig. 9-1]

Ⓐ Terminal block
Ⓑ Indoor unit (Refer to Fig. 9-2)
Ⓒ Breaker
Ⓓ 4-core cable ((2) · · · 2-core cable)
Ⓔ 3-core cable
Ⓕ Power supply
Ⓖ Outdoor unit (Refer to Fig. 9-3)
Ⓗ Remote controller

9.2. Indoor wire connection

Work procedure

1. Remove 2 screws to detach the electric component cover.
2. Route each cable through the wiring intake into the electric component box. (Procure power cable and in-out connecting cable locally and use remote control cable supplied with the unit.)
3. Securely connect the power cable and the in-out connecting cable and the remote control cable to the terminal blocks.
4. Secure the cables with clamps inside the electric component box.
5. Attach the electric component cover as it was.

⚠ **Warning:**

- **Attach the electrical part cover securely. If it is attached incorrectly, it could result in a fire, electric shock due to dust, water, etc.**
- **Use the specified indoor/outdoor unit connecting wire to connect the indoor and outdoor units and fix the wire to the terminal bed securely so that no stress is applied to the connecting section of the terminal bed. Incomplete connection or fixing of the wire could result in a fire.**

[Fig. 9-2]

Ⓐ Entry for remote controller cable
Ⓑ Entry for power supply cable and Indoor-Outdoor connecting cable
Ⓒ Cable clamp
Ⓓ Remote controller terminal
Ⓔ Power supply terminal
Ⓕ Indoor/Outdoor unit connecting terminal
Ⓖ To remote controller
Ⓗ To power supply source
Ⓘ To outdoor unit
Ⓙ Indoor controller

- Perform wiring as shown in the diagram to the lower left. (Procure the cable locally). Make sure to use cables of the correct polarity only.

[Fig. 9-3]

Ⓐ Connecting cable
4 core VVF cable
1.0 mm² or more
Colors
N : Blue
2≂ : Brown
3⎓ : Red
⏚ : Green/Yellow

Ⓑ Power supply cable
3 core with ground IEC cord
1.0 mm² or more
Colors
N : Blue
L≂ : Brown
⏚ : Green/Yellow

Ⓒ Indoor
Ⓓ Outdoor
Ⓔ Always install an earth longer than other cables
Ⓕ Remote controller cable
Wire No × size (mm²) : Cable 2C × 0.69
This wire accessory of remote controller
(wire length : 10m, non-polar)
Ⓖ Remote controller

- Connect the terminal blocks as shown in the diagram below.

[Fig. 9-4]

Ⓐ Loosen terminal screw
Ⓑ Terminal bed

(1) Use care not to make mis-wiring.
(2) Firmly tighten the terminal screws to prevent then from loosening.
(3) After tightening, pull the wires lightly to confirm that they do not move.

9.3 Selecting the power source

It is 240V, 230V setting at factory shipment.
So, it is necessary to change the setting in other power supply districts.
Please remove the connector of motor from the control box, and insert the attachment connector according to each power supply between those.
The connector colors are as follows.

Power source	240V	230V	220V
Color	White		Blue

[Fig. 9-5]

Ⓐ Terminal bed box connector (White)
Ⓑ Motor connector (White)
Ⓒ Attachment connector (Blue) (Accessory)

9.4. Remote controller

9.4.1. For wired remote controller

1) Installing procedures

(1) Select an installing position for the remote controller.
The temperature sensors are located on both remote controller and indoor unit.

▶ **Procure the following parts locally:**
Two piece switch box
Thin copper conduit tube
Lock nuts and bushings

[Fig. 9-6]

Ⓐ Remote controller profile
Ⓑ Required clearances surrounding the remote controller
Ⓒ Installation pitch

(2) Seal the service entrance for the remote controller cord with putty to prevent possible invasion of dew drops, water, cockroaches or worms.

[Fig. 9-7]

Ⓐ For installation in the switch box:
Ⓑ For direct installation on the wall select one of the following:
- Prepare a hole through the wall to pass the remote controller cord (in order to run the remote controller cord from the back), then seal the hole with putty.
- Run the remote controller cord through the cut-out upper case, then seal the cut-out notch with putty similarly as above.

Ⓒ Wall
Ⓓ Conduit
Ⓔ Lock nut
Ⓕ Bushing
Ⓖ Switch box
Ⓗ Remote controller cord
Ⓘ Seal with putty
Ⓙ Wood screw

B-1. To lead the remote controller cord from the back of the controller:
B-2. To run the remote controller cord through the upper portion:
(3) For direct installation on the wall

2) Connecting procedures

① Connect the remote controller cord to the terminal block.

[Fig. 9-8]

Ⓐ To the terminal block on the indoor unit
Ⓑ TB6 (No polarity)
Ⓒ Dip switches

② Set the dip switch No.1 shown below when using two remote controller's for the same group.

Setting the dip switches

The dip switches are at the bottom of the remote controller. Remote controller Main/Sub and other function settings are performed using these switches. Ordinarily, only change the Main/Sub setting of SW No.1. (The factory settings are all "ON".)

<SW No. 1>

SW contents Main	Remote controller Main/Sub setting
ON/OFF	Main/Sub
Comment	Set one of the two remote controllers at one group to "Main"

<SW No. 2>

SW contents Main	When remote controller power turned on
ON/OFF	Normally on/Timer mode on
Comment	When you want to return to the timer mode when the power is restored after a power failure when a Program timer is connected, select "Timer mode".

<SW No. 3>

SW contents Main	Cooling/heating display in AUTO mode
ON/OFF	Yes/No
Comment	When you do not want to display "Cooling" and "Heating" in the Auto mode, set to "No".

<SW No. 4>

SW contents Main	Intake temperature display
ON/OFF	Yes/No
Comment	When you do not want to display the intake temperature, set to "No".

9. Electrical work

9.5. Outdoor unit

[Fig. 9-9]
Ⓐ Cord clamp.
Ⓑ Service panel
Ⓒ Fixing screws

- Connect cable from the indoor unit correctly on the terminal-block.
- Use the same terminal block and polarity as is used with the indoor unit.
- For aftercare maintenance, give extra length to connecting cable.

> - Both end of connecting cable (extension wire) are peeled off. When too long, or connected by cutting off the middle, peel off power supply cable to the size given in the figure.
> - Be careful not to contact connecting cable with piping.

[Fig. 9-10]
Ⓐ Loosen terminal screw
Ⓑ Terminal block
Ⓒ Lead wire

⚠ **Caution:**
- **Use care not to make mis-wiring. (Fig. 9-10)**
- **Firmly tighten the terminal screws to prevent them from loosening.**
- **After tightening, pull the wires lightly to confirm that they do not move.**

⚠ **Warning:**
- **Be sure to attach the service panel of the outdoor unit securely. If it is not attached correctly, it could result in a fire or an electric shock due to dust, water, etc.**
- **Tighten terminal screws securely.**
- **Wiring should be done so that the power lines are not subject to tension. Otherwise, heat may be generated or fire may occur.**

10.Test run

10.1. Before test run

▶ **After completing installation and the wiring and piping of the indoor and outdoor units, check for refrigerant leakage, looseness in the power supply or control wiring, wrong polarity, and no disconnection of one phase in the supply.**
▶ **Use a 500-volt megohmmeter to check that the resistance between the power supply terminals and ground is at least 1.0 MΩ.**
▶ **Do not carry out this test on the control wiring (low voltage circuit) terminals.**

⚠ **Warning:**
Do not use the air conditioner if the insulation resistance is less than 1.0 MΩ.
Insulation resistance
After installation or after the power source to the unit has been cut for an extended period, the insulation resistance will drop below 1 MΩ due to refrigerant accumulating in the compressor. This is not a malfunction. Perform the following procedures.

1. Remove the wires from the compressor and measure the insulation resistance of the compressor.
2. If the insulation resistance is below 1 MΩ, the compressor is faulty or the resistance dropped due the accumulation of refrigerant in the compressor.
3. After connecting the wires to the compressor, the compressor will start to warm up after power is supplied. After supplying power for the times indicated below, measure the insulation resistance again.
   - The insulation resistance drops due to accumulation of refrigerant in the compressor. The resistance will rise above 1 MΩ after the compressor is warmed up for two to three hours.
     (The time necessary to warm up the compressor varies according to atmospheric conditions and refrigerant accumulation.)
   - To operate the compressor with refrigerant accumulated in the compressor, the compressor must be warmed up at least 12 hours to prevent breakdown.
4. If the insulation resistance rises above 1 MΩ, the compressor is not faulty.

⚠ **Caution:**
- **The compressor will not operate unless the power supply phase connection is correct.**
- **Turn on the power at least 12 hours before starting operation.**

- Starting operation immediately after turning on the main power switch can result in severe damage to internal parts. Keep the power switch turned on during the operational season.

10.2. Test run

The following 3 methods are available.

10.2.1. Using wired remote controller

① Turn on the power at least 12 hours before the test run.
② Press the [TEST] button twice. ➡ "TEST RUN" liquid crystal display
③ Press the [Mode selection] button. ➡ Make sure that wind is blown out.
④ Press the [Mode selection] button and switch to the cooling (or heating) mode. ➡ Make sure that cold (or warm) wind is blown out.
⑤ Press the [Fan speed] button. ➡ Make sure that the wind speed is switched.
⑥ Check operation of the outdoor unit fan.
⑦ Release test run by pressing the [ON/OFF] button. ➡ Stop
⑧ After the checks, always turn off the power.

[Fig. 10-1]
Ⓐ ON/OFF button
Ⓑ Test run display
Ⓒ Indoor temperature liquid line temperature display
Ⓓ ON/OFF lamp
Ⓔ Power display
Ⓕ Error code display
Test run remaining time display
Ⓖ Set temperature button
Ⓗ Mode selection button
Ⓘ Fan speed button
Ⓜ TEST button

10.3. Self-check

10.3.1. Wired remote controller

① Turn on the power.
② Press the [CHECK] button twice.
③ Set refrigerant address with [TEMP] button if system control is used.
④ Press the [ON/OFF] button to stop the self-check.

[Fig. 10-2]
Ⓐ CHECK button
Ⓑ Refrigerant address
Ⓒ TEMP. button
Ⓓ IC: Indoor unit
OC: Outdoor unit
Ⓔ Check code

- For description of each check code, refer to the following table.

① Check code	Symptom
5101	Room temperature thermistor error
5102	RT12, 13 thermistor error
2503	Drain sensor error
2502	Drain pump error
1503	Freezing safeguard operation
0405, 1501, 4210, 5102	Outdoor unit error
6831~6834	Signal error between remote controller and indoor units
6800	Communication error between indoor and outdoor units
8000	No alarm history
F F F F	No unit

- On wired remote controller
① Check code displayed in the LCD.

10.Test run

10.4. AUTO RESTART FUNCTION

This model is equipped with the AUTO RESTART FUNCTION.
When the indoor unit is controlled with the remote controller, the operation mode, set temperature, and the fan speed are memorized by the indoor controller board. The auto restart function sets to work the moment the power has restored after power failure, then, the unit will restart automatically.

Notes:

- **The operation settings are memorized when 10 seconds have passed after the remote controller was operated.**
- **If the main power is turned off or a power failure occurs while AUTO START/STOP timer is active, the timer setting is cancelled. As this model is equipped with the auto restart function, the air conditioner should start operating at the same time that a power has restored.**
- **If the unit has been off with the remote controller before power failure, the auto restart function does not work as the power button of the remote controller is off.**
- **To prevent breaker off due to the rush of starting current, systematize other home appliance not to turn on at the same time.**

10.5. Indoor temperature position change function

This model is equipped with the indoor temperature position change function. Detection of room temperature can be changed into remote controller's internal sensor.

① Power supply is turn off.
② Cut the JP14 jumper wire of the indoor controller board with a pair of nippers.

[Fig. 10-3]
Ⓐ Indoor controller board

11.Maintenance

11.1. Gas charge

[Fig. 11-1]
Ⓐ Indoor unit
Ⓑ Union
Ⓒ Liquid pipe
Ⓓ Gas pipe
Ⓔ Stop valve
Ⓕ Outdoor unit
Ⓖ Refrigerant gas cylinder operating valve
Ⓗ Refrigerant gas cylinder for R410A with siphon
Ⓘ Refrigerant (liquid)
Ⓙ Electronic scale for refrigerant charging
Ⓚ Charge hose (for R410A)
Ⓛ Gauge manifold valve (for R410A)
Ⓜ Service port

1. **Connect gas cylinder to the service port of stop valve (3-way).**
2. **Execute air purge of the pipe (or hose) coming from refrigerant gas cylinder.**
3. **Replenish specified amount of refrigerant, while running the air conditioner for cooling.**

Note:
In case of adding refrigerant, comply with the quantity specified for the refrigerating cycle.

⚠ **Caution:**

- **Do not discharge the refrigerant into the atmosphere.**
  Take care not to discharge refrigerant into the atmosphere during installation, reinstallation, or repairs to the refrigerant circuit.
- **For additional charging, charge the refrigerant from liquid phase of the gas cylinder.**
  If the refrigerant is charged from the gas phase, composition change may occur in the refrigerant inside the cylinder and the outdoor unit. In this case, ability of the refrigerating cycle decreases or normal operation can be impossible. However, charging the liquid refrigerant all at once may cause the compressor to be locked. Thus, charge the refrigerant slowly.

To maintain the high pressure of the gas cylinder, warm the gas cylinder with warm water (under 40°C) during cold season. But never use naked fire or steam.

12.System control

[Fig. 12-1]
Ⓐ Outdoor unit
Ⓑ Indoor unit (only SEZ)
Ⓒ Master remote controller
Ⓓ Subordinate remote controller
Ⓔ Standard 1:1 (Refrigerant address = 00)
Ⓕ Simultaneous two groups (Refrigerant address = 01)
Ⓖ Simultaneous three groups (Refrigerant address = 02)
Ⓗ Simultaneous four groups (Refrigerant address = 03)
Ⓘ Indoor controller board.

① Wiring from the Remote Control
This wire is connected to terminal block for remote controller of the indoor unit (non-polar).
② When a Different Refrigerant System Grouping is Used.
Up to 4 refrigerant systems can be controlled as one group using the MA remote controller. There is need to set up JP17, JP18 jumper wire of indoor controller board.

Note:
In single refrigerant system, there in no need of wiring ②, and there is need to cut JP17, JP18 jumper wire of indoor controller board.
The total extention of remote control cable is a maximum of 100 m.

		JP17	JP18	
Ⓔ	Refrigerant address = 00	○ ○	○ ○	The setup at the time shipment. In single refrigerant system, there is no need to cut JP17, JP18.
Ⓕ	Refrigerant address = 01	○ ○	○ ○	Cut the JP17 jumper wire of indoor controller board with a pair of nipper.
Ⓖ	Refrigerant address = 02	○ ○	○ ○	Cut the JP18 jumper wire of indoor controller board with a pair of nipper.
Ⓗ	Refrigerant address = 03	○ ○	○ ○	Cut the JP17, JP18 jumper wire of indoor controller board with a pair of nipper.

B.2.11 SAFETY DEVICE SETTINGS

SEZ-A09CR
SEZ-A12AR
SEZ-A18AR
SEZ-A24AR

Safety device \ Model	SEZ-A12AR	SEZ-A18AR	SEZ-A24AR	SEZ-A09CR
Indoor fan motor Thermal fuse	OFF 145±2℃			OFF 130±2℃