Back to Index page

B.1 CEILING CASSETTE (SLZ)

B.1.1 FEATURES B-4
B.1.2 SPECIFICATIONS B-5
B.1.3 OUTLINES AND DIMENSIONS B-6
B.1.3.1 Indoor unit B-6
B.1.3.2 Remote Contoroller B-7
B.1.4 WIRING DIAGRAM B-8
B.1.5 REFRIGERANT SYSTEM DIAGRAM B-9
B.1.6 PERFORMANCE DATA B-10
B.1.6.1 PERFORMANCE DATA B-10
B.1.6.2 PERFORMANCE CURVES B-17
B.1.7 4-WAY AIR FLOW SYSTEM B-20
B.1.8 NOISE CRITERIA CURVES B-22
B.1.9 OUTLET AIR SPEED AND COVERAGE RANGE B-23
B.1.10 REMOTE CONTROLLER B-24
B.1.11 TROUBLESHOOTING B-25
B.1.12 INSTALLATION PROCEDURE B-26
B.1.13 SAFETY DEVICE SETTINGS B-38

B.1.1 FEATURES

● Indoor(Main) UNIT

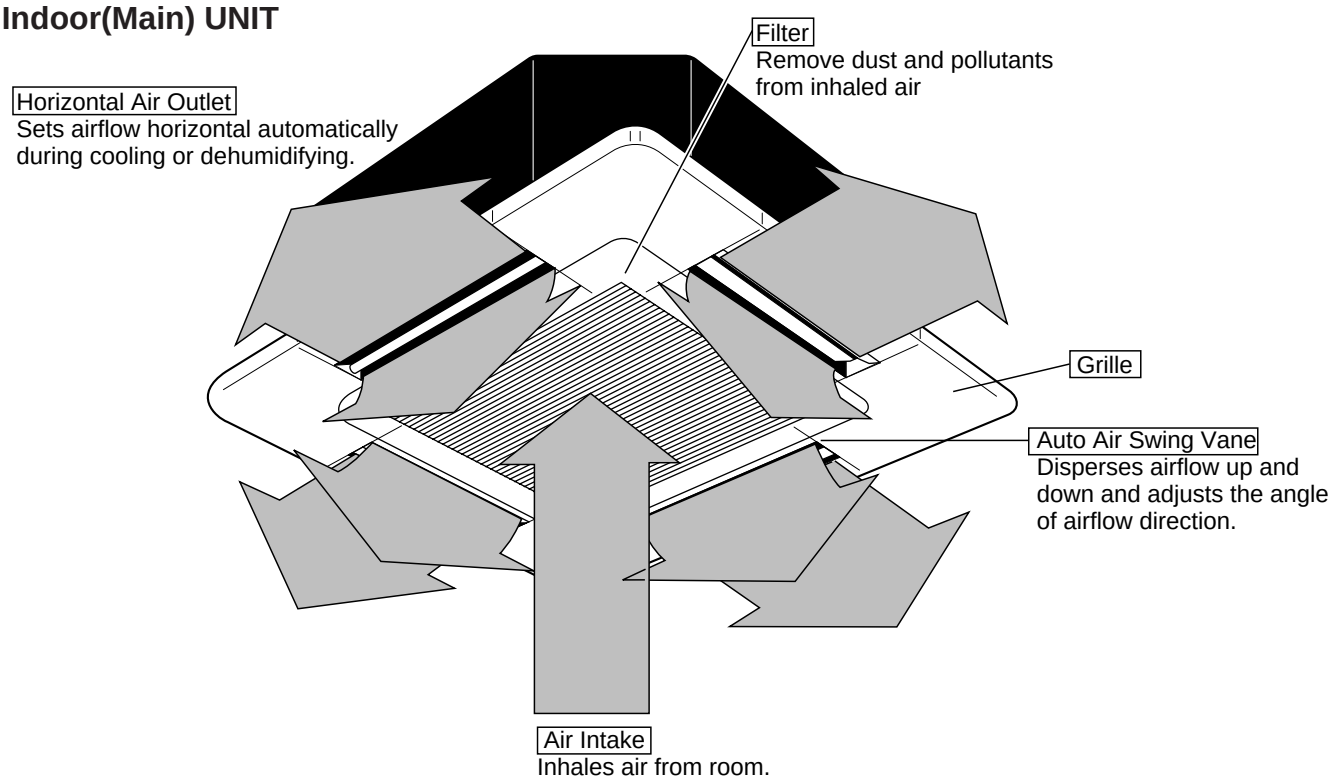

1. The perfect size: Attractive, inconspicuous, and just right for 2-by-2 ceilings

The SLZ-A AR Series is perfect for both residential and small business applications as it offers inverter technology and quiet operation.

The compact size of this line is ideal for 2-by-2 ceilings while the lightweight desing helps to make installation easier and more convenient.

2. Attractive, slim units

With heights of only 208mm for the A09/A12/A18 units, the smooth, aesthetic installation of the SLZ series is as attractive as it is inconspicuous.

3. Versatile drain pipe

Thanks to the adoption of a high-performans pump, the pipe for drain water can be positioned anywhere up to industry-leading 500mm from the ceiling surface.

B.1.2 SPECIFICATIONS

Indoor model			SLZ-A09AR		SLZ-A12AR		SLZ-A18AR	
Function			Cooling	Heating	Cooling	Heating	Cooling	Heating
Power supply			Single phase 230V, 50Hz		Single phase 230V, 50Hz		Single phase 230V, 50Hz	
Capacity	Capacity	Btu/h	8,500	10,200	10,900	12,900	14,600	16,300
		kW	2.5	3.0	3.2	3.8	4.3	4.8
	Total input	kW	0.76	0.87	1.06	1.07	1.53	1.50
	Air flow (High/Med./Low)	m³ /h	600/540/480		660/600/540		660/600/540	
Electrical data	Power outlet	A	10		10		20	
	Running current ✻1	A	0.18		0.23		0.24	
	Power input Rated frequency	W	40		52		53	
	Dew prevention heater	(kW)	0.014		0.014		0.014	
	Power factor ✻1	%	91	92	94	95	97	97
	Fan motor current ✻1	A	0.18		0.23		0.24	
Fan motor	Model		PK6V15-LA		PK6V20-LE		PK6V20-LF	
	Winding resistance (at20℃)	Ω	WHT-BLK : 407 BLK-BLU : 55 BLU-YLW : 31 YLW-BRN : 30		WHT-BLK : 384 BLK-BLU : 111 BLU-YLW : 49 YLW-BRN : 46		WHT-BLK : 317 BLK-BLU : 88 BLU-YLW : 52 YLW-BRN : 45	
		mm(in)	BRN-RED : 165		BRN-RED : 311		BRN-RED : 301	
Dimensions	Width	mm(in)	UNIT : 570(22-7/16) PANEL : 650(25-9/16)					
	Height	mm(in)	UNIT : 208(8-3/16) PANEL : 20(13/16)					
	Depth	kg	UNIT : 570(22-7/16) PANEL : 650(25-9/16)					
Weight			UNIT : 16.5 PANEL : 3					
Special remarks	Air direction	dB(A)	4		4		4	
	Sound level(High/Med./Low)	rpm	38/35/32		39/37/34		40/38/35	
	Fan speed(High/Med./Low)		650/580/530		690/630/570		710/650/590	
	Fan speed regulator	kΩ	3		3		3	
	Thermistor RT11(at25℃)	kΩ	10		10		10	
	Thermistor RT12(at25℃)	kΩ	10		10		10	
	Thermistor RT13(at25℃)		10		10		10	
Remote controller model			MPPC		MPPC		MPPC	

NOTE : Test conditions are based on ISO 5151
Cooling : Indoor D.B. 27℃ W.B. 19℃
Outdoor D.B. 35℃ W.B. 24℃
Heating : Indoor D.B. 20℃ W.B. 15℃
Outdoor D.B. 7℃ W.B. 6℃
Refrigerant piping length (one way): 5m
✻1 Measured under rated operating frequency.

B.1.3 OUTLINES AND DIMENSIONS

B.1.3.1 Indoor unit

SLZ-A09AR
SLZ-A12AR
SLZ-A18AR

Unit : mm

Models	Refrigerent pipe (liquid)	Refrigerent pipe (gas)
SLZ-A09AR	ϕ6.35mm flared connection 1/4F	ϕ9.52mm flared connection 3/8F
SLZ-A12AR	ϕ6.35mm flared connection 1/4F	ϕ9.52mm flared connection 3/8F
SLZ-A18AR	ϕ6.35mm flared connection 1/4F	ϕ12.7mm flared connection 1/2F

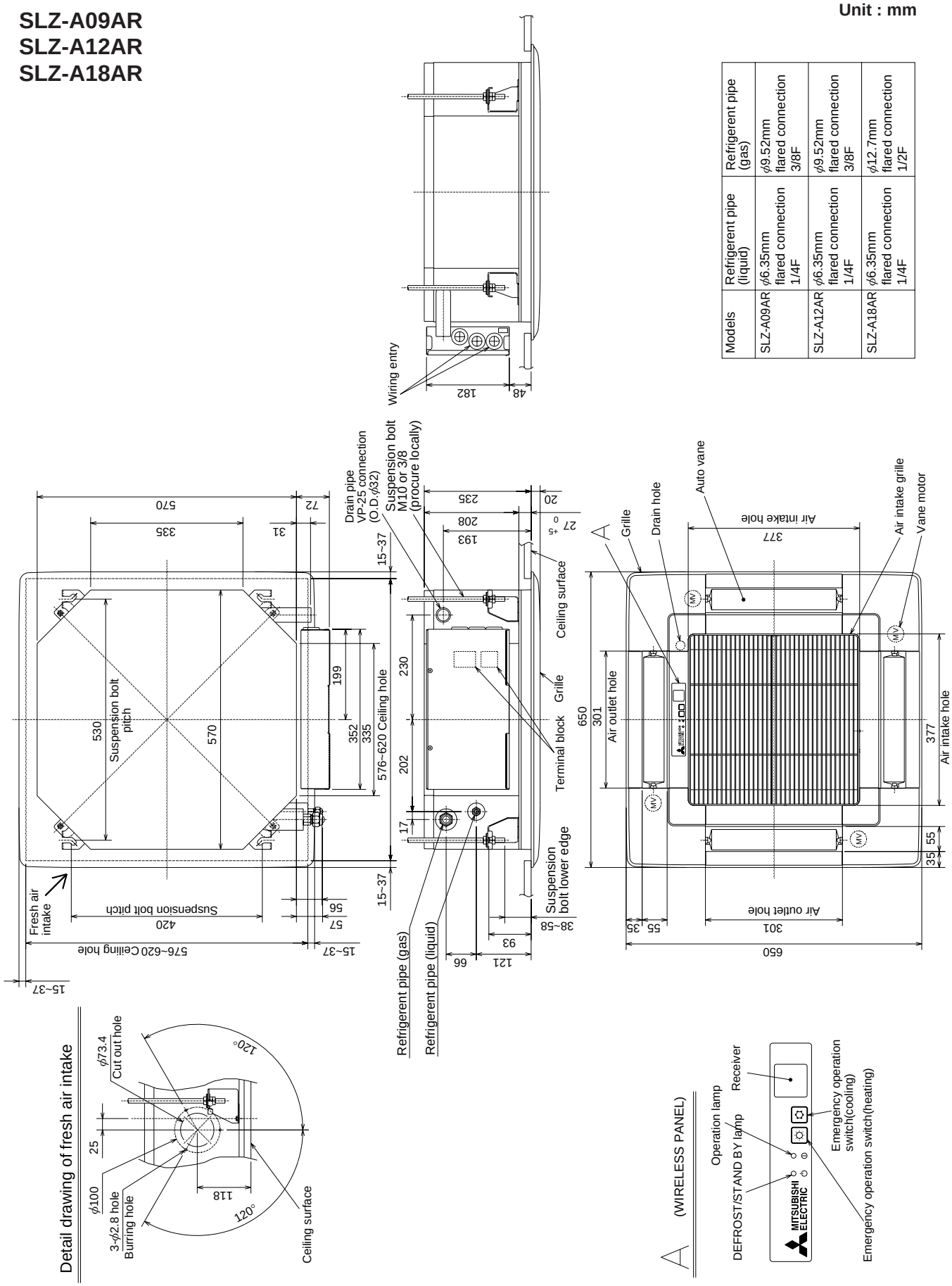

B.1.3.2 Remote Controller

Unit : mm

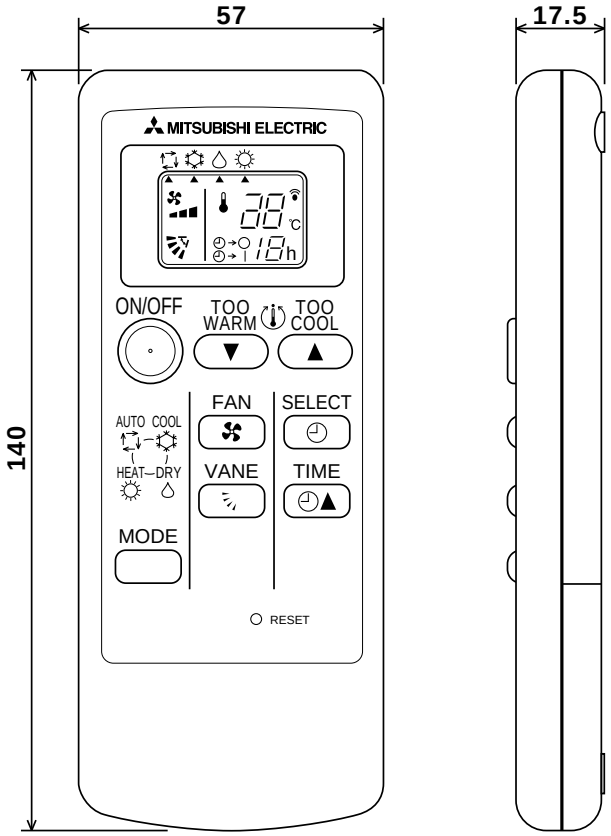

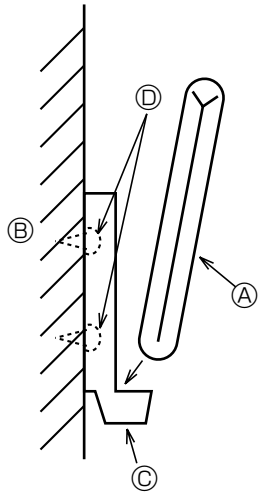

Installation area

- Area in which the remote controller is not exposed direct sunshine.
- Area in which there is no nearby heating source.
- Area in which the remote controller is not exposed to cold (or hot) winds.
- Area in which the remote controller can be operated easily
- Area in which the remote controller is beyond the reach of children.

Installation method

① Attach the remote controller holder to the desired location using two tapping screws.

② Place the lower end of the controller into the holder.

Ⓐ Wireless remote controller (Accessory)
Ⓑ Wall
Ⓒ Remote controller holder (Accessory)
Ⓓ Fixing screw (Accessory)

- The signal can travel up to approximately 7 meters (in a straight line) within 45 degrees to both right and left of the center line of the receiver.
  In addition, the signal may not be received if there is interference of light of fluorescent lights or strong sunlight.

B.1.4 WIRING DIAGRAM

SLZ-A09AR
SLZ-A12AR
SLZ-A18AR

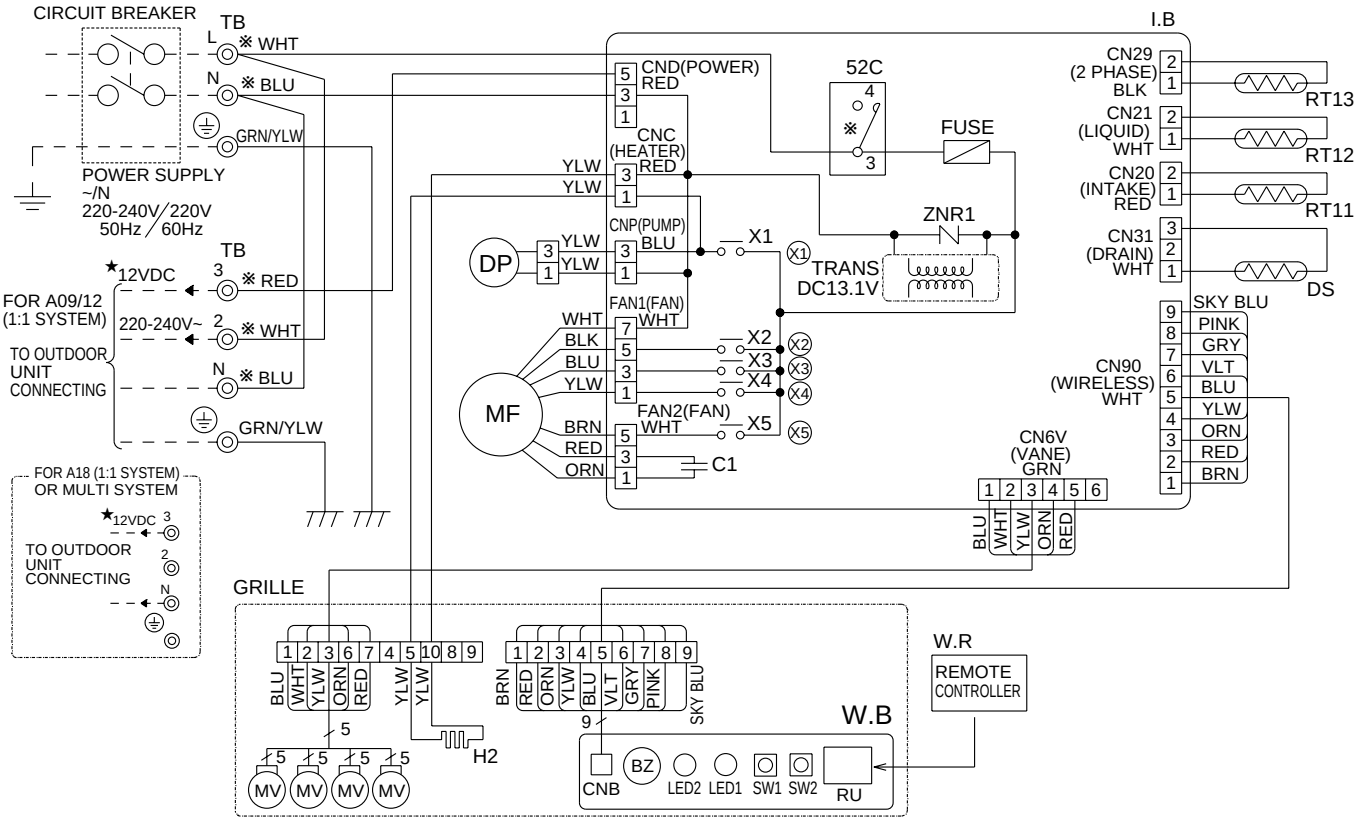

[LEGEND]

SYMBOL	NAME	SYMBOL	NAME	SYMBOL	NAME
I.B	INDOOR CONTROLLER BOARD	W.B	WIRELESS REMOTE CONTROLLER BOARD	DP	DRAIN-UP MACHINE
				DS	DRAIN SENSOR
C1	FAN MOTOR CAPACITOR	BZ	BUZZER	H2	DEW PREVENTION HEATER
FUSE	FUSE(3.15A)	LED1	LED (RUN INDICATOR)	MF	FAN MOTOR
X1	RELAY(D.PUMP /D.HEATER)	LED2	LED (HOT ADJUST)	MV	VANE MOTOR
X2-X5	RELAY (FAN MOTOR)	SW1	SWITCH (HEATING ON/OFF)	RT11	ROOM TEMPERATURE THERMISTOR
ZNR1	VARISTOR	SW2	SWITCH (COOLING ON/OFF)	RT12	PIPE TEMPERATURE THERMISTOR / LIQUID
52C	COMPRESSOR CONTACTOR	RU	RECEVING UNIT	RT13	CONDENSER/EVAPORATOR TEMPERATURE THERMISTOR
				TB	TERMINAL BLOCK
				W.R	WIRELESS REMOTE CONTROLLER

How to remove the terminals shown at " ※ " mark.

" ※ " shows the terminals with a lock mechanism, so they cannot be removed when you pull the lead wire. Be sure to pull the wire by pushing the locking lever (projected part) of the terminal with a finger.

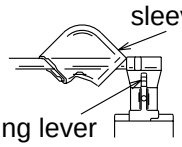

① Slide the sleeve.
② Pull the wire while pushing the locking lever.

NOTES: 1.About the outdoor side electric wiring refer to the outdoor unit electlic wiring diagram for servicing.
2.Use copper conductors only. (For field wiring)
3.Symbols below indicate.
◎ : Terminal block ▭▭▭ : Connector

★ The 12V DC is NOT always against the ground.
Terminal 3 has 12V DC against terminal N.
However, between 3 and 2, these terminals are NOT electrically insulated by the transformer or other device.

B.1.5 REFRIGERANT SYSTEM DIAGRAM

SLZ-A09AR
SLZ-A12AR
SLZ-A18AR

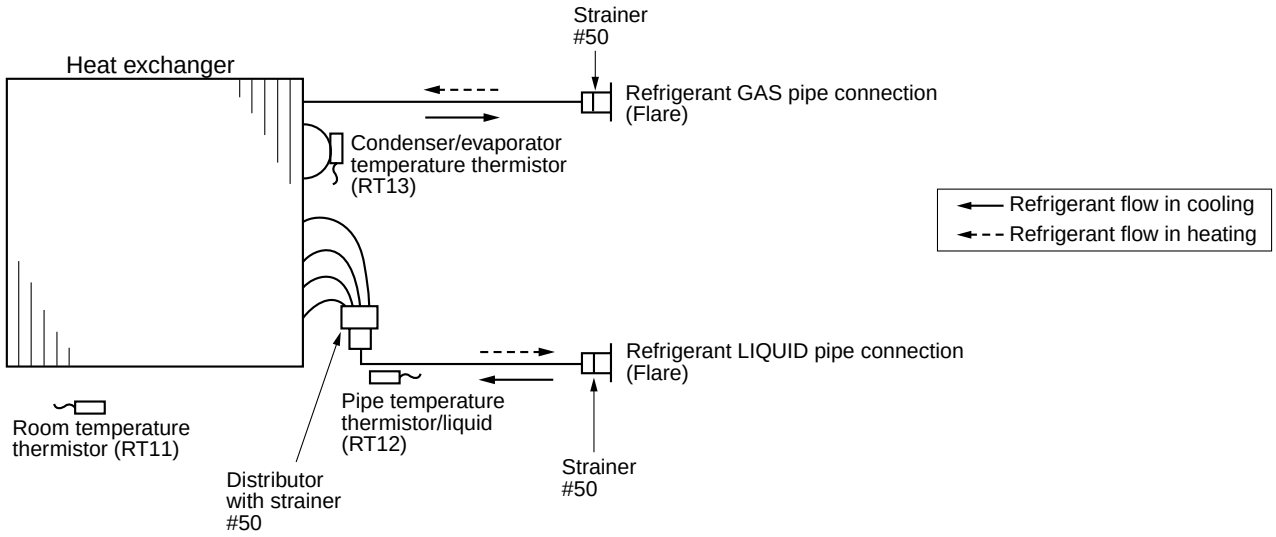

B.1.6 PERFORMANCE DATA

B.1.6.1 PERFORMANCE DATA

COOLING operation Rated frequency 57Hz

SLZ-A09AR / SUZ-A09VR

CAPACITY : 2.5(kW) INPUT : 760(W) SHF : 0.85

		OUTDOOR D.B.(℃)															
INDOOR	INDOOR	21				25				27				30			
D.B.(℃)	W.B.(℃)	Q	SHC	SHF	INPUT	Q	SHC	SHF	INPUT	Q	SHC	SHF	INPUT	Q	SHC	SHF	INPUT
21	18	2.94	1.97	0.67	608	2.81	1.88	0.67	638	2.70	1.81	0.67	669	2.60	1.74	0.67	699
21	20	3.06	1.68	0.55	638	2.94	1.62	0.55	676	2.85	1.57	0.55	692	2.75	1.51	0.55	722
22	18	2.94	2.09	0.71	608	2.81	2.00	0.71	638	2.70	1.92	0.71	669	2.60	1.85	0.71	699
22	20	3.06	1.81	0.59	638	2.94	1.73	0.59	676	2.85	1.68	0.59	692	2.75	1.62	0.59	722
22	22	3.19	1.50	0.47	661	3.08	1.45	0.47	703	3.00	1.41	0.47	722	2.88	1.35	0.47	752
23	18	2.94	2.20	0.75	608	2.81	2.11	0.75	638	2.70	2.03	0.75	669	2.60	1.95	0.75	699
23	20	3.06	1.93	0.63	638	2.94	1.85	0.63	676	2.85	1.80	0.63	692	2.75	1.73	0.63	722
23	22	3.19	1.63	0.51	661	3.08	1.57	0.51	703	3.00	1.53	0.51	722	2.88	1.47	0.51	752
24	18	2.94	2.32	0.79	608	2.81	2.22	0.79	638	2.70	2.13	0.79	669	2.60	2.05	0.79	699
24	20	3.06	2.05	0.67	638	2.94	1.97	0.67	676	2.85	1.91	0.67	692	2.75	1.84	0.67	722
24	22	3.19	1.75	0.55	661	3.08	1.69	0.55	703	3.00	1.65	0.55	722	2.88	1.58	0.55	752
24	24	3.35	1.44	0.43	692	3.23	1.39	0.43	730	3.15	1.35	0.43	752	3.05	1.31	0.43	790
25	20	3.06	2.17	0.71	638	2.94	2.09	0.71	676	2.85	2.02	0.71	692	2.75	1.95	0.71	722
25	22	3.19	1.88	0.59	661	3.08	1.81	0.59	703	3.00	1.77	0.59	722	2.88	1.70	0.59	752
25	24	3.35	1.57	0.47	692	3.23	1.52	0.47	730	3.15	1.48	0.47	752	3.05	1.43	0.47	790
26	18	2.94	2.56	0.87	608	2.81	2.45	0.87	638	2.70	2.35	0.87	669	2.60	2.26	0.87	699
26	20	3.06	2.30	0.75	638	2.94	2.20	0.75	676	2.85	2.14	0.75	692	2.75	2.06	0.75	722
26	22	3.19	2.01	0.63	661	3.08	1.94	0.63	703	3.00	1.89	0.63	722	2.88	1.81	0.63	752
26	24	3.35	1.71	0.51	692	3.23	1.64	0.51	730	3.15	1.61	0.51	752	3.05	1.56	0.51	790
26	26	3.45	1.35	0.39	730	3.35	1.31	0.39	768	3.30	1.29	0.39	790	3.20	1.25	0.39	813
27	18	2.94	2.67	0.91	608	2.81	2.56	0.91	638	2.70	2.46	0.91	669	2.60	2.37	0.91	699
27	20	3.06	2.42	0.79	638	2.94	2.32	0.79	676	2.85	2.25	0.79	692	2.75	2.17	0.79	722
27	22	3.19	2.14	0.67	661	3.08	2.06	0.67	703	3.00	2.01	0.67	722	2.88	1.93	0.67	752
27	24	3.35	1.84	0.55	692	3.23	1.77	0.55	730	3.15	1.73	0.55	752	3.05	1.68	0.55	790
27	26	3.45	1.48	0.43	730	3.35	1.44	0.43	768	3.30	1.42	0.43	790	3.20	1.38	0.43	813
28	18	2.94	2.79	0.95	608	2.81	2.67	0.95	638	2.70	2.57	0.95	669	2.60	2.47	0.95	699
28	20	3.06	2.54	0.83	638	2.94	2.44	0.83	676	2.85	2.37	0.83	692	2.75	2.28	0.83	722
28	22	3.19	2.26	0.71	661	3.08	2.18	0.71	703	3.00	2.13	0.71	722	2.88	2.04	0.71	752
28	24	3.35	1.98	0.59	692	3.23	1.90	0.59	730	3.15	1.86	0.59	752	3.05	1.80	0.59	790
28	26	3.45	1.62	0.47	730	3.35	1.57	0.47	768	3.30	1.55	0.47	790	3.20	1.50	0.47	813
29	18	2.94	2.91	0.99	608	2.81	2.78	0.99	638	2.70	2.67	0.99	669	2.60	2.57	0.99	699
29	20	3.06	2.66	0.87	638	2.94	2.56	0.87	676	2.85	2.48	0.87	692	2.75	2.39	0.87	722
29	22	3.19	2.39	0.75	661	3.08	2.31	0.75	703	3.00	2.25	0.75	722	2.88	2.16	0.75	752
29	24	3.35	2.11	0.63	692	3.23	2.03	0.63	730	3.15	1.98	0.63	752	3.05	1.92	0.63	790
29	26	3.45	1.76	0.51	730	3.35	1.71	0.51	768	3.30	1.68	0.51	790	3.20	1.63	0.51	813
30	18	2.94	3.03	1.03	608	2.81	2.90	1.03	638	2.70	2.78	1.03	669	2.60	2.68	1.03	699
30	20	3.06	2.79	0.91	638	2.94	2.67	0.91	676	2.85	2.59	0.91	692	2.75	2.50	0.91	722
30	22	3.19	2.52	0.79	661	3.08	2.43	0.79	703	3.00	2.37	0.79	722	2.88	2.27	0.79	752
30	24	3.35	2.24	0.67	692	3.23	2.16	0.67	730	3.15	2.11	0.67	752	3.05	2.04	0.67	790
30	26	3.45	1.90	0.55	730	3.35	1.84	0.55	768	3.30	1.82	0.55	790	3.20	1.76	0.55	813
31	18	2.94	3.14	1.07	608	2.81	3.01	1.07	638	2.70	2.89	1.07	669	2.60	2.78	1.07	699
31	20	3.06	2.91	0.95	638	2.94	2.79	0.95	676	2.85	2.71	0.95	692	2.75	2.61	0.95	722
31	22	3.19	2.65	0.83	661	3.08	2.55	0.83	703	3.00	2.49	0.83	722	2.88	2.39	0.83	752
31	24	3.35	2.38	0.71	692	3.23	2.29	0.71	730	3.15	2.24	0.71	752	3.05	2.17	0.71	790
31	26	3.45	2.04	0.59	730	3.35	1.98	0.59	768	3.30	1.95	0.59	790	3.20	1.89	0.59	813
32	18	2.94	3.26	1.11	608	2.81	3.12	1.11	638	2.70	3.00	1.11	669	2.60	2.89	1.11	699
32	20	3.06	3.03	0.99	638	2.94	2.91	0.99	676	2.85	2.82	0.99	692	2.75	2.72	0.99	722
32	22	3.19	2.77	0.87	661	3.08	2.68	0.87	703	3.00	2.61	0.87	722	2.88	2.50	0.87	752
32	24	3.35	2.51	0.75	692	3.23	2.42	0.75	730	3.15	2.36	0.75	752	3.05	2.29	0.75	790
32	26	3.45	2.17	0.63	730	3.35	2.11	0.63	768	3.30	2.08	0.63	790	3.20	2.02	0.63	813

NOTE Q : Total capacity (kW) SHF : Sensible heat factor DB : Dry-bulb temperature
SHC : Sensible heat capacity (kW) INPUT : Total power input (W) WB : Wet-bulb temperature

COOLING operation Rated frequency 57Hz
SLZ-A09AR / SUZ-A09VR
CAPACITY : 2.5(kW) INPUT : 760(W) SHF : 0.85

		OUTDOOR D.B.(℃)											
INDOOR	INDOOR	35				40				46			
D.B.(℃)	W.B.(℃)	Q	SHC	SHF	INPUT	Q	SHC	SHF	INPUT	Q	SHC	SHF	INPUT
21	18	2.45	1.64	0.67	745	2.25	1.51	0.67	790	2.08	1.39	0.67	821
21	20	2.58	1.42	0.55	775	2.40	1.32	0.55	813	2.23	1.22	0.55	859
22	18	2.45	1.74	0.71	745	2.25	1.60	0.71	790	2.08	1.47	0.71	821
22	20	2.58	1.52	0.59	775	2.40	1.42	0.59	813	2.23	1.31	0.59	859
22	22	2.73	1.28	0.47	806	2.55	1.20	0.47	851	2.38	1.12	0.47	882
23	18	2.45	1.84	0.75	745	2.25	1.69	0.75	790	2.08	1.56	0.75	821
23	20	2.58	1.62	0.63	775	2.40	1.51	0.63	813	2.23	1.40	0.63	859
23	22	2.73	1.39	0.51	806	2.55	1.30	0.51	851	2.38	1.21	0.51	882
24	18	2.45	1.94	0.79	745	2.25	1.78	0.79	790	2.08	1.64	0.79	821
24	20	2.58	1.73	0.67	775	2.40	1.61	0.67	813	2.23	1.49	0.67	859
24	22	2.73	1.50	0.55	806	2.55	1.40	0.55	851	2.38	1.31	0.55	882
24	24	2.88	1.24	0.43	836	2.70	1.16	0.43	874	2.55	1.10	0.43	912
25	20	2.58	1.83	0.71	775	2.40	1.70	0.71	813	2.23	1.58	0.71	859
25	22	2.73	1.61	0.59	806	2.55	1.50	0.59	851	2.38	1.40	0.59	882
25	24	2.88	1.35	0.47	836	2.70	1.27	0.47	874	2.55	1.20	0.47	912
26	18	2.45	2.13	0.87	745	2.25	1.96	0.87	790	2.08	1.81	0.87	821
26	20	2.58	1.93	0.75	775	2.40	1.80	0.75	813	2.23	1.67	0.75	859
26	22	2.73	1.72	0.63	806	2.55	1.61	0.63	851	2.38	1.50	0.63	882
26	24	2.88	1.47	0.51	836	2.70	1.38	0.51	874	2.55	1.30	0.51	912
26	26	3.03	1.18	0.39	866	2.85	1.11	0.39	904	2.68	1.04	0.39	942
27	18	2.45	2.23	0.91	745	2.25	2.05	0.91	790	2.08	1.89	0.91	821
27	20	2.58	2.03	0.79	775	2.40	1.90	0.79	813	2.23	1.76	0.79	859
27	22	2.73	1.83	0.67	806	2.55	1.71	0.67	851	2.38	1.59	0.67	882
27	24	2.88	1.58	0.55	836	2.70	1.49	0.55	874	2.55	1.40	0.55	912
27	26	3.03	1.30	0.43	866	2.85	1.23	0.43	904	2.68	1.15	0.43	942
28	18	2.45	2.33	0.95	745	2.25	2.14	0.95	790	2.08	1.97	0.95	821
28	20	2.58	2.14	0.83	775	2.40	1.99	0.83	813	2.23	1.85	0.83	859
28	22	2.73	1.93	0.71	806	2.55	1.81	0.71	851	2.38	1.69	0.71	882
28	24	2.88	1.70	0.59	836	2.70	1.59	0.59	874	2.55	1.50	0.59	912
28	26	3.03	1.42	0.47	866	2.85	1.34	0.47	904	2.68	1.26	0.47	942
29	18	2.45	2.43	0.99	745	2.25	2.23	0.99	790	2.08	2.05	0.99	821
29	20	2.58	2.24	0.87	775	2.40	2.09	0.87	813	2.23	1.94	0.87	859
29	22	2.73	2.04	0.75	806	2.55	1.91	0.75	851	2.38	1.78	0.75	882
29	24	2.88	1.81	0.63	836	2.70	1.70	0.63	874	2.55	1.61	0.63	912
29	26	3.03	1.54	0.51	866	2.85	1.45	0.51	904	2.68	1.36	0.51	942
30	18	2.45	2.52	1.03	745	2.25	2.32	1.03	790	2.08	2.14	1.03	821
30	20	2.58	2.34	0.91	775	2.40	2.18	0.91	813	2.23	2.02	0.91	859
30	22	2.73	2.15	0.79	806	2.55	2.01	0.79	851	2.38	1.88	0.79	882
30	24	2.88	1.93	0.67	836	2.70	1.81	0.67	874	2.55	1.71	0.67	912
30	26	3.03	1.66	0.55	866	2.85	1.57	0.55	904	2.68	1.47	0.55	942
31	18	2.45	2.62	1.07	745	2.25	2.41	1.07	790	2.08	2.22	1.07	821
31	20	2.58	2.45	0.95	775	2.40	2.28	0.95	813	2.23	2.11	0.95	859
31	22	2.73	2.26	0.83	806	2.55	2.12	0.83	851	2.38	1.97	0.83	882
31	24	2.88	2.04	0.71	836	2.70	1.92	0.71	874	2.55	1.81	0.71	912
31	26	3.03	1.78	0.59	866	2.85	1.68	0.59	904	2.68	1.58	0.59	942
32	18	2.45	2.72	1.11	745	2.25	2.50	1.11	790	2.08	2.30	1.11	821
32	20	2.58	2.55	0.99	775	2.40	2.38	0.99	813	2.23	2.20	0.99	859
32	22	2.73	2.37	0.87	806	2.55	2.22	0.87	851	2.38	2.07	0.87	882
32	24	2.88	2.16	0.75	836	2.70	2.03	0.75	874	2.55	1.91	0.75	912
32	26	3.03	1.91	0.63	866	2.85	1.80	0.63	904	2.68	1.69	0.63	942

NOTE Q : Total capacity (kW) SHF : Sensible heat factor DB : Dry-bulb temperature
SHC : Sensible heat capacity (kW) INPUT : Total power input (W) WB : Wet-bulb temperature

COOLING operation Rated frequency 67Hz
SLZ-A12AR / SUZ-A12VR
CAPACITY : 3.2(kW) INPUT : 1060(W) SHF : 0.79

		OUTDOOR D.B.(℃)															
INDOOR	INDOOR	21				25				27				30			
D.B.(℃)	W.B.(℃)	Q	SHC	SHF	INPUT	Q	SHC	SHF	INPUT	Q	SHC	SHF	INPUT	Q	SHC	SHF	INPUT
21	18	3.76	2.29	0.61	848	3.60	2.20	0.61	890	3.46	2.11	0.61	933	3.33	2.03	0.61	975
21	20	3.92	1.92	0.49	890	3.76	1.84	0.49	943	3.65	1.79	0.49	965	3.52	1.72	0.49	1007
22	18	3.76	2.44	0.65	848	3.60	2.34	0.65	890	3.46	2.25	0.65	933	3.33	2.16	0.65	975
22	20	3.92	2.08	0.53	890	3.76	1.99	0.53	943	3.65	1.93	0.53	965	3.52	1.87	0.53	1007
22	22	4.08	1.67	0.41	922	3.94	1.61	0.41	981	3.84	1.57	0.41	1007	3.68	1.51	0.41	1049
23	18	3.76	2.59	0.69	848	3.60	2.48	0.69	890	3.46	2.38	0.69	933	3.33	2.30	0.69	975
23	20	3.92	2.23	0.57	890	3.76	2.14	0.57	943	3.65	2.08	0.57	965	3.52	2.01	0.57	1007
23	22	4.08	1.84	0.45	922	3.94	1.77	0.45	981	3.84	1.73	0.45	1007	3.68	1.66	0.45	1049
24	18	3.76	2.74	0.73	848	3.60	2.63	0.73	890	3.46	2.52	0.73	933	3.33	2.43	0.73	975
24	20	3.92	2.39	0.61	890	3.76	2.29	0.61	943	3.65	2.23	0.61	965	3.52	2.15	0.61	1007
24	22	4.08	2.00	0.49	922	3.94	1.93	0.49	981	3.84	1.88	0.49	1007	3.68	1.80	0.49	1049
24	24	4.29	1.59	0.37	965	4.13	1.53	0.37	1018	4.03	1.49	0.37	1049	3.90	1.44	0.37	1102
25	20	3.92	2.55	0.65	890	3.76	2.44	0.65	943	3.65	2.37	0.65	965	3.52	2.29	0.65	1007
25	22	4.08	2.16	0.53	922	3.94	2.09	0.53	981	3.84	2.04	0.53	1007	3.68	1.95	0.53	1049
25	24	4.29	1.76	0.41	965	4.13	1.69	0.41	1018	4.03	1.65	0.41	1049	3.90	1.60	0.41	1102
26	18	3.76	3.05	0.81	848	3.60	2.92	0.81	890	3.46	2.80	0.81	933	3.33	2.70	0.81	975
26	20	3.92	2.70	0.69	890	3.76	2.59	0.69	943	3.65	2.52	0.69	965	3.52	2.43	0.69	1007
26	22	4.08	2.33	0.57	922	3.94	2.24	0.57	981	3.84	2.19	0.57	1007	3.68	2.10	0.57	1049
26	24	4.29	1.93	0.45	965	4.13	1.86	0.45	1018	4.03	1.81	0.45	1049	3.90	1.76	0.45	1102
26	26	4.42	1.46	0.33	1018	4.29	1.42	0.33	1071	4.22	1.39	0.33	1102	4.10	1.35	0.33	1134
27	18	3.76	3.20	0.85	848	3.60	3.06	0.85	890	3.46	2.94	0.85	933	3.33	2.83	0.85	975
27	20	3.92	2.86	0.73	890	3.76	2.74	0.73	943	3.65	2.66	0.73	965	3.52	2.57	0.73	1007
27	22	4.08	2.49	0.61	922	3.94	2.40	0.61	981	3.84	2.34	0.61	1007	3.68	2.24	0.61	1049
27	24	4.29	2.10	0.49	965	4.13	2.02	0.49	1018	4.03	1.98	0.49	1049	3.90	1.91	0.49	1102
27	26	4.42	1.63	0.37	1018	4.29	1.59	0.37	1071	4.22	1.56	0.37	1102	4.10	1.52	0.37	1134
28	18	3.76	3.35	0.89	848	3.60	3.20	0.89	890	3.46	3.08	0.89	933	3.33	2.96	0.89	975
28	20	3.92	3.02	0.77	890	3.76	2.90	0.77	943	3.65	2.81	0.77	965	3.52	2.71	0.77	1007
28	22	4.08	2.65	0.65	922	3.94	2.56	0.65	981	3.84	2.50	0.65	1007	3.68	2.39	0.65	1049
28	24	4.29	2.27	0.53	965	4.13	2.19	0.53	1018	4.03	2.14	0.53	1049	3.90	2.07	0.53	1102
28	26	4.42	1.81	0.41	1018	4.29	1.76	0.41	1071	4.22	1.73	0.41	1102	4.10	1.68	0.41	1134
29	18	3.76	3.50	0.93	848	3.60	3.35	0.93	890	3.46	3.21	0.93	933	3.33	3.10	0.93	975
29	20	3.92	3.18	0.81	890	3.76	3.05	0.81	943	3.65	2.95	0.81	965	3.52	2.85	0.81	1007
29	22	4.08	2.82	0.69	922	3.94	2.72	0.69	981	3.84	2.65	0.69	1007	3.68	2.54	0.69	1049
29	24	4.29	2.44	0.57	965	4.13	2.35	0.57	1018	4.03	2.30	0.57	1049	3.90	2.23	0.57	1102
29	26	4.42	1.99	0.45	1018	4.29	1.93	0.45	1071	4.22	1.90	0.45	1102	4.10	1.84	0.45	1134
30	18	3.76	3.65	0.97	848	3.60	3.49	0.97	890	3.46	3.35	0.97	933	3.33	3.23	0.97	975
30	20	3.92	3.33	0.85	890	3.76	3.20	0.85	943	3.65	3.10	0.85	965	3.52	2.99	0.85	1007
30	22	4.08	2.98	0.73	922	3.94	2.87	0.73	981	3.84	2.80	0.73	1007	3.68	2.69	0.73	1049
30	24	4.29	2.62	0.61	965	4.13	2.52	0.61	1018	4.03	2.46	0.61	1049	3.90	2.38	0.61	1102
30	26	4.42	2.16	0.49	1018	4.29	2.10	0.49	1071	4.22	2.07	0.49	1102	4.10	2.01	0.49	1134
31	18	3.76	3.80	1.01	848	3.60	3.64	1.01	890	3.46	3.49	1.01	933	3.33	3.36	1.01	975
31	20	3.92	3.49	0.89	890	3.76	3.35	0.89	943	3.65	3.25	0.89	965	3.52	3.13	0.89	1007
31	22	4.08	3.14	0.77	922	3.94	3.03	0.77	981	3.84	2.96	0.77	1007	3.68	2.83	0.77	1049
31	24	4.29	2.79	0.65	965	4.13	2.68	0.65	1018	4.03	2.62	0.65	1049	3.90	2.54	0.65	1102
31	26	4.42	2.34	0.53	1018	4.29	2.27	0.53	1071	4.22	2.24	0.53	1102	4.10	2.17	0.53	1134
32	18	3.76	3.95	1.05	848	3.60	3.78	1.05	890	3.46	3.63	1.05	933	3.33	3.49	1.05	975
32	20	3.92	3.65	0.93	890	3.76	3.50	0.93	943	3.65	3.39	0.93	965	3.52	3.27	0.93	1007
32	22	4.08	3.30	0.81	922	3.94	3.19	0.81	981	3.84	3.11	0.81	1007	3.68	2.98	0.81	1049
32	24	4.29	2.96	0.69	965	4.13	2.85	0.69	1018	4.03	2.78	0.69	1049	3.90	2.69	0.69	1102
32	26	4.42	2.52	0.57	1018	4.29	2.44	0.57	1071	4.22	2.41	0.57	1102	4.10	2.33	0.57	1134

NOTE Q : Total capacity (kW) SHF : Sensible heat factor DB : Dry-bulb temperature
SHC : Sensible heat capacity (kW) INPUT : Total power input (W) WB : Wet-bulb temperature

SLZ-A12AR / SUZ-A12VR

CAPACITY : 3.2(kW) INPUT : 1060(W) SHF : 0.79

		OUTDOOR D.B.(℃)											
INDOOR	INDOOR	35				40				46			
D.B.(℃)	W.B.(℃)	Q	SHC	SHF	INPUT	Q	SHC	SHF	INPUT	Q	SHC	SHF	INPUT
21	18	3.14	1.91	0.61	1039	2.88	1.76	0.61	1102	2.66	1.62	0.61	1145
21	20	3.30	1.62	0.49	1081	3.07	1.51	0.49	1134	2.85	1.40	0.49	1198
22	18	3.14	2.04	0.65	1039	2.88	1.87	0.65	1102	2.66	1.73	0.65	1145
22	20	3.30	1.75	0.53	1081	3.07	1.63	0.53	1134	2.85	1.51	0.53	1198
22	22	3.49	1.43	0.41	1124	3.26	1.34	0.41	1187	3.04	1.25	0.41	1230
23	18	3.14	2.16	0.69	1039	2.88	1.99	0.69	1102	2.66	1.83	0.69	1145
23	20	3.30	1.88	0.57	1081	3.07	1.75	0.57	1134	2.85	1.62	0.57	1198
23	22	3.49	1.57	0.45	1124	3.26	1.47	0.45	1187	3.04	1.37	0.45	1230
24	18	3.14	2.29	0.73	1039	2.88	2.10	0.73	1102	2.66	1.94	0.73	1145
24	20	3.30	2.01	0.61	1081	3.07	1.87	0.61	1134	2.85	1.74	0.61	1198
24	22	3.49	1.71	0.49	1124	3.26	1.60	0.49	1187	3.04	1.49	0.49	1230
24	24	3.68	1.36	0.37	1166	3.46	1.28	0.37	1219	3.26	1.21	0.37	1272
25	20	3.30	2.14	0.65	1081	3.07	2.00	0.65	1134	2.85	1.85	0.65	1198
25	22	3.49	1.85	0.53	1124	3.26	1.73	0.53	1187	3.04	1.61	0.53	1230
25	24	3.68	1.51	0.41	1166	3.46	1.42	0.41	1219	3.26	1.34	0.41	1272
26	18	3.14	2.54	0.81	1039	2.88	2.33	0.81	1102	2.66	2.15	0.81	1145
26	20	3.30	2.27	0.69	1081	3.07	2.12	0.69	1134	2.85	1.97	0.69	1198
26	22	3.49	1.99	0.57	1124	3.26	1.86	0.57	1187	3.04	1.73	0.57	1230
26	24	3.68	1.66	0.45	1166	3.46	1.56	0.45	1219	3.26	1.47	0.45	1272
26	26	3.87	1.28	0.33	1208	3.65	1.20	0.33	1261	3.42	1.13	0.33	1314
27	18	3.14	2.67	0.85	1039	2.88	2.45	0.85	1102	2.66	2.26	0.85	1145
27	20	3.30	2.41	0.73	1081	3.07	2.24	0.73	1134	2.85	2.08	0.73	1198
27	22	3.49	2.13	0.61	1124	3.26	1.99	0.61	1187	3.04	1.85	0.61	1230
27	24	3.68	1.80	0.49	1166	3.46	1.69	0.49	1219	3.26	1.60	0.49	1272
27	26	3.87	1.43	0.37	1208	3.65	1.35	0.37	1261	3.42	1.27	0.37	1314
28	18	3.14	2.79	0.89	1039	2.88	2.56	0.89	1102	2.66	2.36	0.89	1145
28	20	3.30	2.54	0.77	1081	3.07	2.37	0.77	1134	2.85	2.19	0.77	1198
28	22	3.49	2.27	0.65	1124	3.26	2.12	0.65	1187	3.04	1.98	0.65	1230
28	24	3.68	1.95	0.53	1166	3.46	1.83	0.53	1219	3.26	1.73	0.53	1272
28	26	3.87	1.59	0.41	1208	3.65	1.50	0.41	1261	3.42	1.40	0.41	1314
29	18	3.14	2.92	0.93	1039	2.88	2.68	0.93	1102	2.66	2.47	0.93	1145
29	20	3.30	2.67	0.81	1081	3.07	2.49	0.81	1134	2.85	2.31	0.81	1198
29	22	3.49	2.41	0.69	1124	3.26	2.25	0.69	1187	3.04	2.10	0.69	1230
29	24	3.68	2.10	0.57	1166	3.46	1.97	0.57	1219	3.26	1.86	0.57	1272
29	26	3.87	1.74	0.45	1208	3.65	1.64	0.45	1261	3.42	1.54	0.45	1314
30	18	3.14	3.04	0.97	1039	2.88	2.79	0.97	1102	2.66	2.58	0.97	1145
30	20	3.30	2.80	0.85	1081	3.07	2.61	0.85	1134	2.85	2.42	0.85	1198
30	22	3.49	2.55	0.73	1124	3.26	2.38	0.73	1187	3.04	2.22	0.73	1230
30	24	3.68	2.24	0.61	1166	3.46	2.11	0.61	1219	3.26	1.99	0.61	1272
30	26	3.87	1.90	0.49	1208	3.65	1.79	0.49	1261	3.42	1.68	0.49	1314
31	18	3.14	3.17	1.01	1039	2.88	2.91	1.01	1102	2.66	2.68	1.01	1145
31	20	3.30	2.93	0.89	1081	3.07	2.73	0.89	1134	2.85	2.53	0.89	1198
31	22	3.49	2.69	0.77	1124	3.26	2.51	0.77	1187	3.04	2.34	0.77	1230
31	24	3.68	2.39	0.65	1166	3.46	2.25	0.65	1219	3.26	2.12	0.65	1272
31	26	3.87	2.05	0.53	1208	3.65	1.93	0.53	1261	3.42	1.81	0.53	1314
32	18	3.14	3.29	1.05	1039	2.88	3.02	1.05	1102	2.66	2.79	1.05	1145
32	20	3.30	3.07	0.93	1081	3.07	2.86	0.93	1134	2.85	2.65	0.93	1198
32	22	3.49	2.83	0.81	1124	3.26	2.64	0.81	1187	3.04	2.46	0.81	1230
32	24	3.68	2.54	0.69	1166	3.46	2.38	0.69	1219	3.26	2.25	0.69	1272
32	26	3.87	2.21	0.57	1208	3.65	2.08	0.57	1261	3.42	1.95	0.57	1314

NOTE Q : Total capacity (kW) SHF : Sensible heat factor DB : Dry-bulb temperature
SHC : Sensible heat capacity (kW) INPUT : Total power input (W) WB : Wet-bulb temperature

COOLING operation Rated frequency 65Hz
SLZ-A18AR / SUZ-A18VR
CAPACITY : 4.6(kW) INPUT : 1630(W) SHF : 0.68

		OUTDOOR D.B.(℃)															
INDOOR	INDOOR	21				25				27				30			
D.B.(℃)	W.B.(℃)	Q	SHC	SHF	INPUT	Q	SHC	SHF	INPUT	Q	SHC	SHF	INPUT	Q	SHC	SHF	INPUT
21	18	5.41	2.70	0.50	1304	5.18	2.59	0.50	1369	4.97	2.48	0.50	1434	4.78	2.39	0.50	1500
21	20	5.64	2.14	0.38	1369	5.41	2.05	0.38	1451	5.24	1.99	0.38	1483	5.06	1.92	0.38	1549
22	18	5.41	2.92	0.54	1304	5.18	2.79	0.54	1369	4.97	2.68	0.54	1434	4.78	2.58	0.54	1500
22	20	5.64	2.37	0.42	1369	5.41	2.27	0.42	1451	5.24	2.20	0.42	1483	5.06	2.13	0.42	1549
22	22	5.87	1.76	0.30	1418	5.66	1.70	0.30	1508	5.52	1.66	0.30	1549	5.29	1.59	0.30	1614
23	18	5.41	3.13	0.58	1304	5.18	3.00	0.58	1369	4.97	2.88	0.58	1434	4.78	2.77	0.58	1500
23	20	5.64	2.59	0.46	1369	5.41	2.49	0.46	1451	5.24	2.41	0.46	1483	5.06	2.33	0.46	1549
23	22	5.87	1.99	0.34	1418	5.66	1.92	0.34	1508	5.52	1.88	0.34	1549	5.29	1.80	0.34	1614
24	18	5.41	3.35	0.62	1304	5.18	3.21	0.62	1369	4.97	3.08	0.62	1434	4.78	2.97	0.62	1500
24	20	5.64	2.82	0.50	1369	5.41	2.70	0.50	1451	5.24	2.62	0.50	1483	5.06	2.53	0.50	1549
24	22	5.87	2.23	0.38	1418	5.66	2.15	0.38	1508	5.52	2.10	0.38	1549	5.29	2.01	0.38	1614
24	24	6.16	1.60	0.26	1483	5.93	1.54	0.26	1565	5.80	1.51	0.26	1614	5.61	1.46	0.26	1695
25	20	5.64	3.04	0.54	1369	5.41	2.92	0.54	1451	5.24	2.83	0.54	1483	5.06	2.73	0.54	1549
25	22	5.87	2.46	0.42	1418	5.66	2.38	0.42	1508	5.52	2.32	0.42	1549	5.29	2.22	0.42	1614
25	24	6.16	1.85	0.30	1483	5.93	1.78	0.30	1565	5.80	1.74	0.30	1614	5.61	1.68	0.30	1695
26	18	5.41	3.78	0.70	1304	5.18	3.62	0.70	1369	4.97	3.48	0.70	1434	4.78	3.35	0.70	1500
26	20	5.64	3.27	0.58	1369	5.41	3.13	0.58	1451	5.24	3.04	0.58	1483	5.06	2.93	0.58	1549
26	22	5.87	2.70	0.46	1418	5.66	2.60	0.46	1508	5.52	2.54	0.46	1549	5.29	2.43	0.46	1614
26	24	6.16	2.10	0.34	1483	5.93	2.02	0.34	1565	5.80	1.97	0.34	1614	5.61	1.91	0.34	1695
26	26	6.35	1.40	0.22	1565	6.16	1.36	0.22	1646	6.07	1.34	0.22	1695	5.89	1.30	0.22	1744
27	18	5.41	4.00	0.74	1304	5.18	3.83	0.74	1369	4.97	3.68	0.74	1434	4.78	3.54	0.74	1500
27	20	5.64	3.49	0.62	1369	5.41	3.35	0.62	1451	5.24	3.25	0.62	1483	5.06	3.14	0.62	1549
27	22	5.87	2.93	0.50	1418	5.66	2.83	0.50	1508	5.52	2.76	0.50	1549	5.29	2.65	0.50	1614
27	24	6.16	2.34	0.38	1483	5.93	2.25	0.38	1565	5.80	2.20	0.38	1614	5.61	2.13	0.38	1695
27	26	6.35	1.65	0.26	1565	6.16	1.60	0.26	1646	6.07	1.58	0.26	1695	5.89	1.53	0.26	1744
28	18	5.41	4.22	0.78	1304	5.18	4.04	0.78	1369	4.97	3.88	0.78	1434	4.78	3.73	0.78	1500
28	20	5.64	3.72	0.66	1369	5.41	3.57	0.66	1451	5.24	3.46	0.66	1483	5.06	3.34	0.66	1549
28	22	5.87	3.17	0.54	1418	5.66	3.06	0.54	1508	5.52	2.98	0.54	1549	5.29	2.86	0.54	1614
28	24	6.16	2.59	0.42	1483	5.93	2.49	0.42	1565	5.80	2.43	0.42	1614	5.61	2.36	0.42	1695
28	26	6.35	1.90	0.30	1565	6.16	1.85	0.30	1646	6.07	1.82	0.30	1695	5.89	1.77	0.30	1744
29	18	5.41	4.43	0.82	1304	5.18	4.24	0.82	1369	4.97	4.07	0.82	1434	4.78	3.92	0.82	1500
29	20	5.64	3.94	0.70	1369	5.41	3.78	0.70	1451	5.24	3.67	0.70	1483	5.06	3.54	0.70	1549
29	22	5.87	3.40	0.58	1418	5.66	3.28	0.58	1508	5.52	3.20	0.58	1549	5.29	3.07	0.58	1614
29	24	6.16	2.84	0.46	1483	5.93	2.73	0.46	1565	5.80	2.67	0.46	1614	5.61	2.58	0.46	1695
29	26	6.35	2.16	0.34	1565	6.16	2.10	0.34	1646	6.07	2.06	0.34	1695	5.89	2.00	0.34	1744
30	18	5.41	4.65	0.86	1304	5.18	4.45	0.86	1369	4.97	4.27	0.86	1434	4.78	4.11	0.86	1500
30	20	5.64	4.17	0.74	1369	5.41	4.00	0.74	1451	5.24	3.88	0.74	1483	5.06	3.74	0.74	1549
30	22	5.87	3.64	0.62	1418	5.66	3.51	0.62	1508	5.52	3.42	0.62	1549	5.29	3.28	0.62	1614
30	24	6.16	3.08	0.50	1483	5.93	2.97	0.50	1565	5.80	2.90	0.50	1614	5.61	2.81	0.50	1695
30	26	6.35	2.41	0.38	1565	6.16	2.34	0.38	1646	6.07	2.31	0.38	1695	5.89	2.24	0.38	1744
31	18	5.41	4.86	0.90	1304	5.18	4.66	0.90	1369	4.97	4.47	0.90	1434	4.78	4.31	0.90	1500
31	20	5.64	4.40	0.78	1369	5.41	4.22	0.78	1451	5.24	4.09	0.78	1483	5.06	3.95	0.78	1549
31	22	5.87	3.87	0.66	1418	5.66	3.73	0.66	1508	5.52	3.64	0.66	1549	5.29	3.49	0.66	1614
31	24	6.16	3.33	0.54	1483	5.93	3.20	0.54	1565	5.80	3.13	0.54	1614	5.61	3.03	0.54	1695
31	26	6.35	2.67	0.42	1565	6.16	2.59	0.42	1646	6.07	2.55	0.42	1695	5.89	2.47	0.42	1744
32	18	5.41	5.08	0.94	1304	5.18	4.86	0.94	1369	4.97	4.67	0.94	1434	4.78	4.50	0.94	1500
32	20	5.64	4.62	0.82	1369	5.41	4.43	0.82	1451	5.24	4.30	0.82	1483	5.06	4.15	0.82	1549
32	22	5.87	4.11	0.70	1418	5.66	3.96	0.70	1508	5.52	3.86	0.70	1549	5.29	3.70	0.70	1614
32	24	6.16	3.58	0.58	1483	5.93	3.44	0.58	1565	5.80	3.36	0.58	1614	5.61	3.25	0.58	1695
32	26	6.35	2.92	0.46	1565	6.16	2.84	0.46	1646	6.07	2.79	0.46	1695	5.89	2.71	0.46	1744

NOTE Q : Total capacity (kW) SHF : Sensible heat factor DB : Dry-bulb temperature
SHC : Sensible heat capacity (kW) INPUT : Total power input (W) WB : Wet-bulb temperature

COOLING operation Rated frequency 65Hz
SLZ-A18AR / SUZ-A18VR
CAPACITY : 4.6(kW) INPUT : 1630(W) SHF : 0.68

		OUTDOOR D.B.(℃)											
INDOOR	INDOOR	35				40				46			
D.B.(℃)	W.B.(℃)	Q	SHC	SHF	INPUT	Q	SHC	SHF	INPUT	Q	SHC	SHF	INPUT
21	18	4.51	2.25	0.50	1597	4.14	2.07	0.50	1695	3.82	1.91	0.50	1760
21	20	4.74	1.80	0.38	1663	4.42	1.68	0.38	1744	4.09	1.56	0.38	1842
22	18	4.51	2.43	0.54	1597	4.14	2.24	0.54	1695	3.82	2.06	0.54	1760
22	20	4.74	1.99	0.42	1663	4.42	1.85	0.42	1744	4.09	1.72	0.42	1842
22	22	5.01	1.50	0.30	1728	4.69	1.41	0.30	1826	4.37	1.31	0.30	1891
23	18	4.51	2.61	0.58	1597	4.14	2.40	0.58	1695	3.82	2.21	0.58	1760
23	20	4.74	2.18	0.46	1663	4.42	2.03	0.46	1744	4.09	1.88	0.46	1842
23	22	5.01	1.70	0.34	1728	4.69	1.60	0.34	1826	4.37	1.49	0.34	1891
24	18	4.51	2.79	0.62	1597	4.14	2.57	0.62	1695	3.82	2.37	0.62	1760
24	20	4.74	2.37	0.50	1663	4.42	2.21	0.50	1744	4.09	2.05	0.50	1842
24	22	5.01	1.91	0.38	1728	4.69	1.78	0.38	1826	4.37	1.66	0.38	1891
24	24	5.29	1.38	0.26	1793	4.97	1.29	0.26	1875	4.69	1.22	0.26	1956
25	20	4.74	2.56	0.54	1663	4.42	2.38	0.54	1744	4.09	2.21	0.54	1842
25	22	5.01	2.11	0.42	1728	4.69	1.97	0.42	1826	4.37	1.84	0.42	1891
25	24	5.29	1.59	0.30	1793	4.97	1.49	0.30	1875	4.69	1.41	0.30	1956
26	18	4.51	3.16	0.70	1597	4.14	2.90	0.70	1695	3.82	2.67	0.70	1760
26	20	4.74	2.75	0.58	1663	4.42	2.56	0.58	1744	4.09	2.37	0.58	1842
26	22	5.01	2.31	0.46	1728	4.69	2.16	0.46	1826	4.37	2.01	0.46	1891
26	24	5.29	1.80	0.34	1793	4.97	1.69	0.34	1875	4.69	1.60	0.34	1956
26	26	5.57	1.22	0.22	1858	5.24	1.15	0.22	1940	4.92	1.08	0.22	2021
27	18	4.51	3.34	0.74	1597	4.14	3.06	0.74	1695	3.82	2.83	0.74	1760
27	20	4.74	2.94	0.62	1663	4.42	2.74	0.62	1744	4.09	2.54	0.62	1842
27	22	5.01	2.51	0.50	1728	4.69	2.35	0.50	1826	4.37	2.19	0.50	1891
27	24	5.29	2.01	0.38	1793	4.97	1.89	0.38	1875	4.69	1.78	0.38	1956
27	26	5.57	1.45	0.26	1858	5.24	1.36	0.26	1940	4.92	1.28	0.26	2021
28	18	4.51	3.52	0.78	1597	4.14	3.23	0.78	1695	3.82	2.98	0.78	1760
28	20	4.74	3.13	0.66	1663	4.42	2.91	0.66	1744	4.09	2.70	0.66	1842
28	22	5.01	2.71	0.54	1728	4.69	2.53	0.54	1826	4.37	2.36	0.54	1891
28	24	5.29	2.22	0.42	1793	4.97	2.09	0.42	1875	4.69	1.97	0.42	1956
28	26	5.57	1.67	0.30	1858	5.24	1.57	0.30	1940	4.92	1.48	0.30	2021
29	18	4.51	3.70	0.82	1597	4.14	3.39	0.82	1695	3.82	3.13	0.82	1760
29	20	4.74	3.32	0.70	1663	4.42	3.09	0.70	1744	4.09	2.87	0.70	1842
29	22	5.01	2.91	0.58	1728	4.69	2.72	0.58	1826	4.37	2.53	0.58	1891
29	24	5.29	2.43	0.46	1793	4.97	2.29	0.46	1875	4.69	2.16	0.46	1956
29	26	5.57	1.89	0.34	1858	5.24	1.78	0.34	1940	4.92	1.67	0.34	2021
30	18	4.51	3.88	0.86	1597	4.14	3.56	0.86	1695	3.82	3.28	0.86	1760
30	20	4.74	3.51	0.74	1663	4.42	3.27	0.74	1744	4.09	3.03	0.74	1842
30	22	5.01	3.11	0.62	1728	4.69	2.91	0.62	1826	4.37	2.71	0.62	1891
30	24	5.29	2.65	0.50	1793	4.97	2.48	0.50	1875	4.69	2.35	0.50	1956
30	26	5.57	2.12	0.38	1858	5.24	1.99	0.38	1940	4.92	1.87	0.38	2021
31	18	4.51	4.06	0.90	1597	4.14	3.73	0.90	1695	3.82	3.44	0.90	1760
31	20	4.74	3.70	0.78	1663	4.42	3.44	0.78	1744	4.09	3.19	0.78	1842
31	22	5.01	3.31	0.66	1728	4.69	3.10	0.66	1826	4.37	2.88	0.66	1891
31	24	5.29	2.86	0.54	1793	4.97	2.68	0.54	1875	4.69	2.53	0.54	1956
31	26	5.57	2.34	0.42	1858	5.24	2.20	0.42	1940	4.92	2.07	0.42	2021
32	18	4.51	4.24	0.94	1597	4.14	3.89	0.94	1695	3.82	3.59	0.94	1760
32	20	4.74	3.89	0.82	1663	4.42	3.62	0.82	1744	4.09	3.36	0.82	1842
32	22	5.01	3.51	0.70	1728	4.69	3.28	0.70	1826	4.37	3.06	0.70	1891
32	24	5.29	3.07	0.58	1793	4.97	2.88	0.58	1875	4.69	2.72	0.58	1956
32	26	5.57	2.56	0.46	1858	5.24	2.41	0.46	1940	4.92	2.26	0.46	2021

NOTE Q : Total capacity (kW) SHF : Sensible heat factor DB : Dry-bulb temperature
SHC : Sensible heat capacity (kW) INPUT : Total power input (W) WB : Wet-bulb temperature

HEATING operation

SLZ-A09AR / SUZ-A09VR Rated frequency 75Hz

CAPACITY : 3.0(kW) INPUT : 870(W)

	OUTDOOR W.B.(℃)													
INDOOR	-10		-5		0		5		10		15		20	
D.B.(℃)	Q	INPUT	Q	INPUT	Q	INPUT	Q	INPUT	Q	INPUT	Q	INPUT	Q	INPUT
15	1.89	566	2.28	679	2.67	766	3.06	960	3.45	879	3.81	905	4.20	922
21	1.80	609	2.16	722	2.55	800	2.91	1000	3.30	905	3.66	931	4.04	966
26	1.62	653	2.01	766	2.37	844	2.76	1050	3.15	948	3.51	974	3.90	1001

SLZ-A12AR / SUZ-A12VR Rated frequency 76Hz

CAPACITY : 3.8(kW) INPUT : 1070(W)

	OUTDOOR W.B.(℃)													
INDOOR	-10		-5		0		5		10		15		20	
D.B.(℃)	Q	INPUT	Q	INPUT	Q	INPUT	Q	INPUT	Q	INPUT	Q	INPUT	Q	INPUT
15	2.39	696	2.89	835	3.38	942	3.88	1017	4.37	1081	4.83	1113	5.32	1134
21	2.28	749	2.74	888	3.23	984	3.69	1059	4.18	1113	4.64	1145	5.11	1188
26	2.05	803	2.55	942	3.00	1038	3.50	1113	3.99	1166	4.45	1198	4.94	1231

SLZ-A18AR / SUZ-A18VR Rated frequency 65Hz

CAPACITY : 5.0(kW) INPUT : 1550(W)

	OUTDOOR W.B.(℃)													
INDOOR	-10		-5		0		5		10		15		20	
D.B.(℃)	Q	INPUT	Q	INPUT	Q	INPUT	Q	INPUT	Q	INPUT	Q	INPUT	Q	INPUT
15	3.15	1008	3.80	1209	4.45	1364	5.10	1473	5.75	1566	6.35	1612	7.00	1643
21	3.00	1085	3.60	1287	4.25	1426	4.85	1535	5.50	1612	6.10	1659	6.73	1721
26	2.70	1163	3.35	1364	3.95	1504	4.60	1612	5.25	1690	5.85	1739	6.50	1783

B.1.6.2 PERFORMANCE CURVES

The standard data contained in these specifications apply only to the operation of the air conditioner under normal condition. Operating conditions vary according to the areas where these units are installed. The following information has been provided to clarify the operating characteristics of the air conditioner under the conditions indicated by the performance curve.

(1) GUARANTEED VOLTAGE

Rated voltage : ±10% (207~253V), 50Hz

(2) AIR FLOW

Air flow should be set at MAX.

(3) MAIN READINGS

COOLING
(1) Indoor intake air wet-bulb temperature : W.B. ˚C
(2) Indoor outlet air wet-bulb temperature : W.B. ˚C
(3) Outdoor intake air dry-bulb temperature : D.B. ˚C
(4) Total input : W

HEATING
(1) Indoor intake air dry-bulb temperature : D.B. ˚C
(2) Indoor outlet air dry-bulb temperature : D.B. ˚C
(3) Outdoor intake air wet-bulb temperature : W.B. ˚C
(4) Total input : W

Indoor air wet/dry-bulb temperature difference on the side of the chart on page shows the difference between the indoor intake air wet/dry-bulb temperature and the indoor outlet air wet/dry-bulb temperature for your reference at service.

How to measure the indoor air wet-bulb/dry-bulb temperature difference

1. Attach at least 2 sets of wet-and-dry-bulb thermometers to the indoor air inlet as shown in the figure, and at least 2 sets of wet-and-dry-bulb thermometers to the indoor air outlet. The thermometers must be attached to the position where air speed is high.
2. Attach at least 2 sets of wet-and-dry-bulb thermometers to the outdoor air inlet.
   Cover the thermometers to prevent direct rays of the sun.
3. Check that the air filter is cleaned.
4. Open windows and doors of the room.
5. Press the EMERGENCY OPERATION switch once to start the COOL(HEAT) MODE.
6. When system stabilizes after more than 15 minutes, measure temperature and take an average temperature.
7. 10 minutes later, measure temperature again and check that the temperature does not change.

INDOOR UNIT

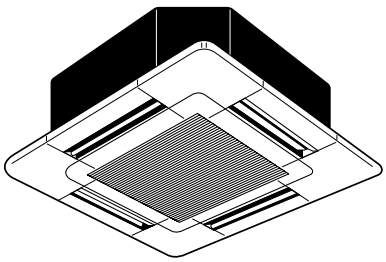

OUTDOOR UNIT

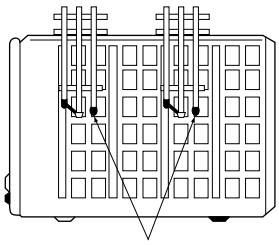

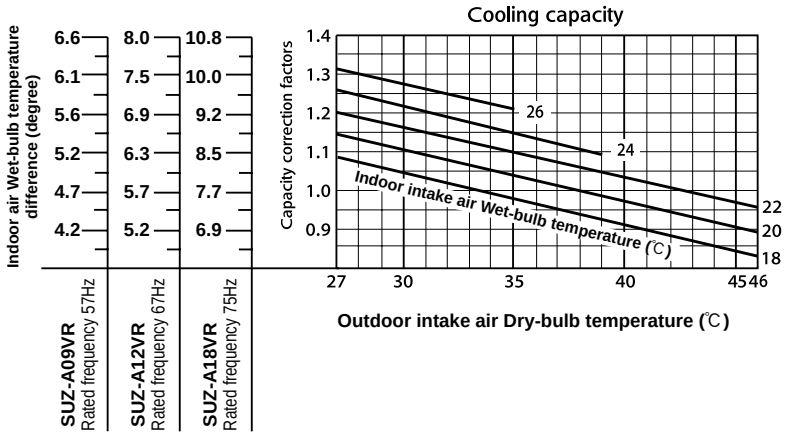

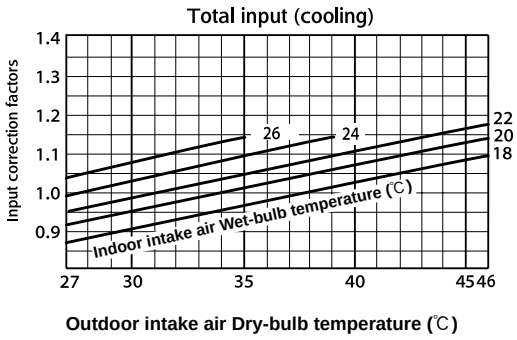

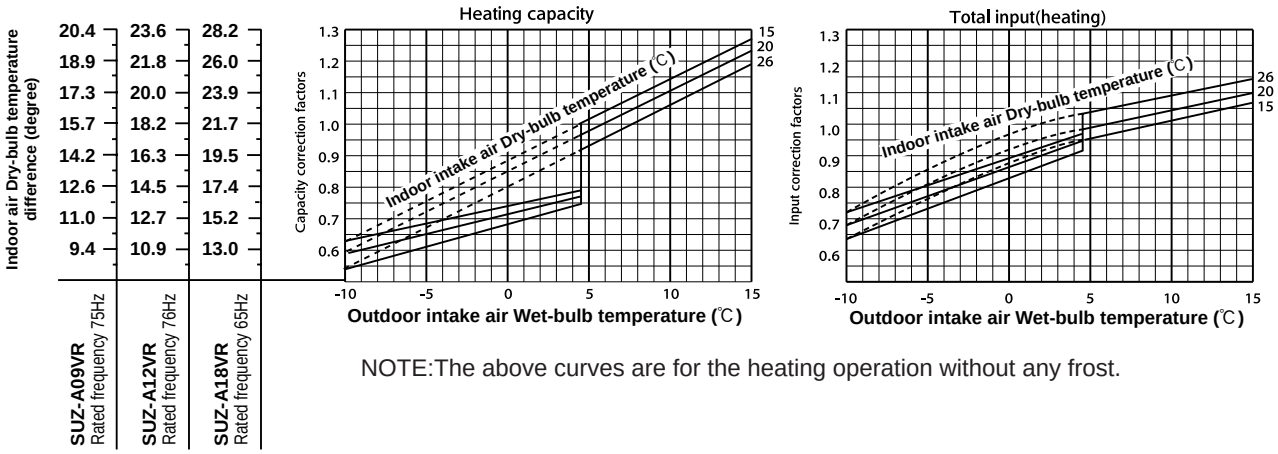

NOTE:The above curves are for the heating operation without any frost.

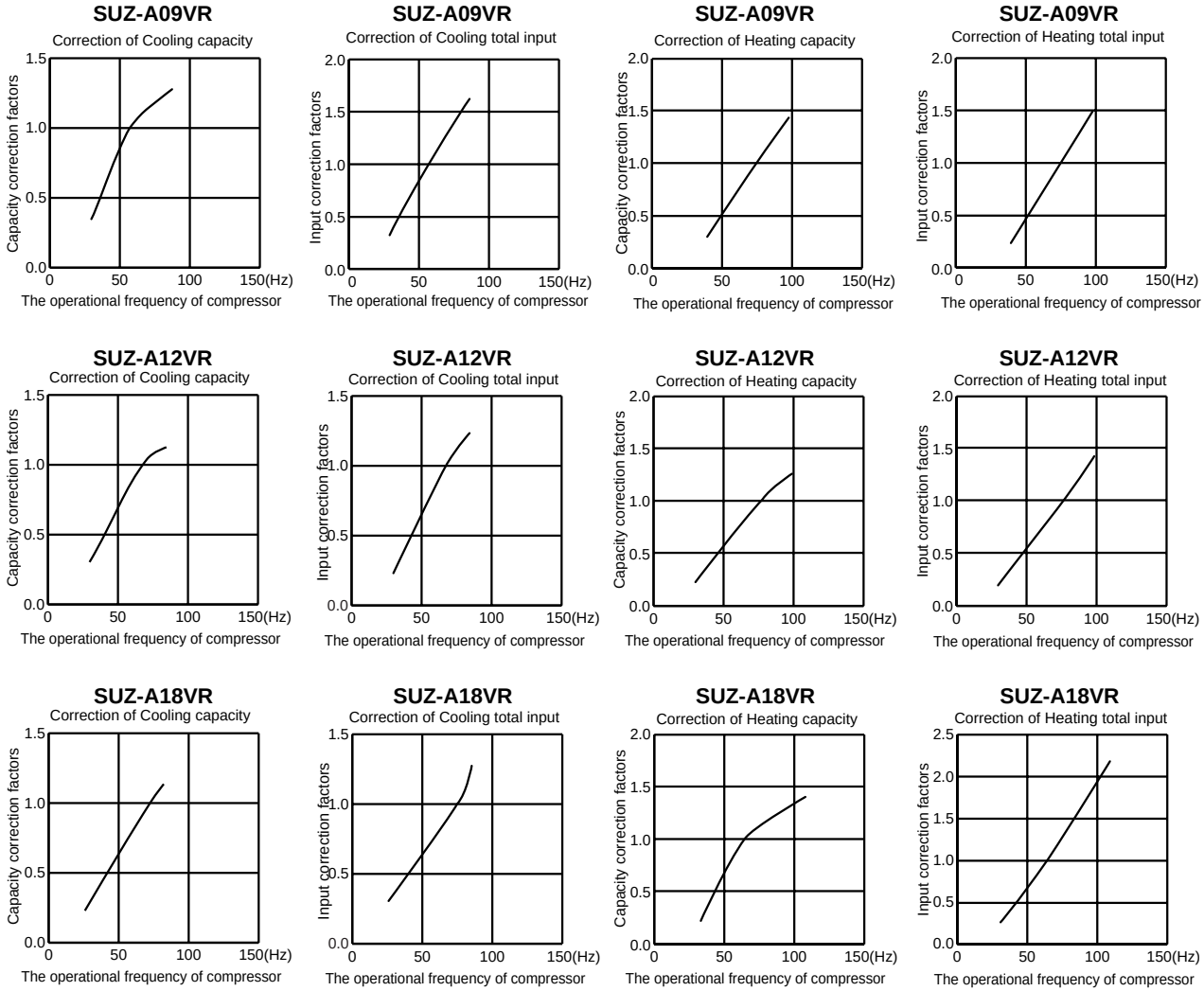

OUTDOOR LOW PRESSURE AND OUTDOOR UNIT CURRENT

<How to operate fixed-frequency operation (Test run operation)>

1. Press the EMERGENCY OPERATION switch to COOL or HEAT mode.
2. Test run operation starts and continue to operate for 30 minutes.
3. Compressor starts at rated frequency in COOL mode or 58Hz in HEAT mode.
4. Indoor fan operates at High speed.
5. After 30 minutes, test run operation finishes and EMERGENCY OPERATION starts.
6. To cancel test run operation (EMERGENCY OPERATION), press the EMERGENCY OPERATION switch or any button on remote controller.

NOTE : The unit of pressure has been changed to MPa on the international system of units (SI unit system).

The conversion factor is: **1(MPa [Gauge]) =10.2(kgf/㎠ [Gauge])**

OUTDOOR LOW PRESSURE AND OUTDOOR UNIT CURRENT

COOL operation

① Both indoor and outdoor unit are under the same temperature/humidity condition.

② Air flow : High speed

③ Operational frequency : 57Hz(SUZ-A09VR)
67Hz(SUZ-A12VR)
75Hz(SUZ-A18VR)

Dry-bulb temperature	Relative humidity(%)
20	50
25	60
30	70

SUZ-A09VR

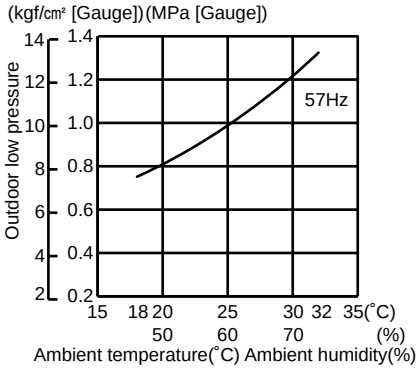

SUZ-A12VR

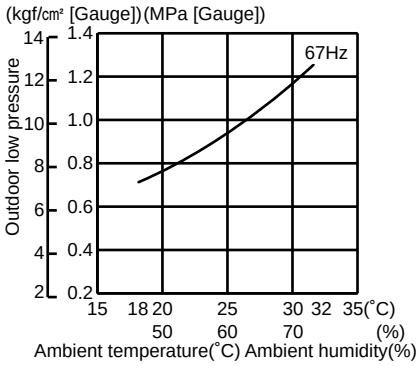

SUZ-A18VR

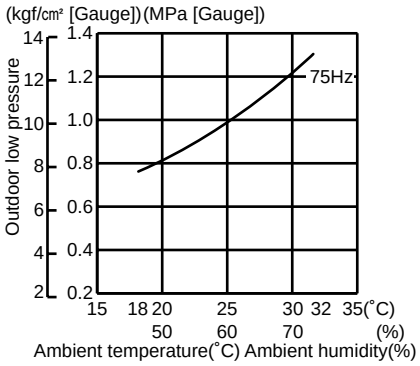

SUZ-A09VR

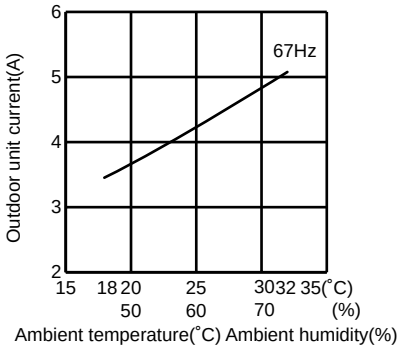

SUZ-A12VR

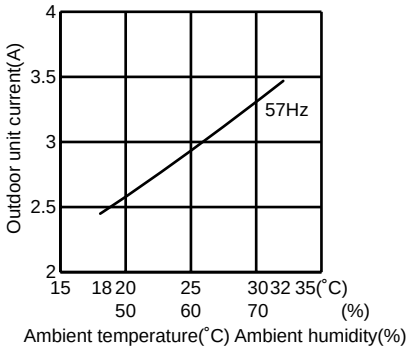

SUZ-A18VR

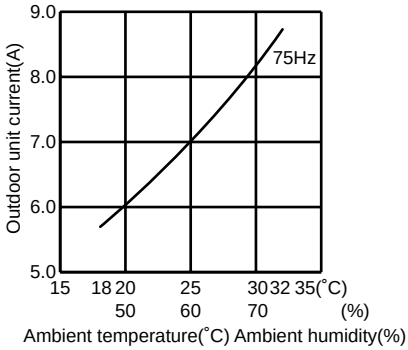

HEAT operation

Condition indoor: Dry bulb temperature 20.0°C
Wet bulb temperature 14.5°C

Condition outdoor: Dry bulb temperature 2,7,15,20.0°C
Wet bulb temperature 1,6,12,14.5°C

SUZ-A09VR

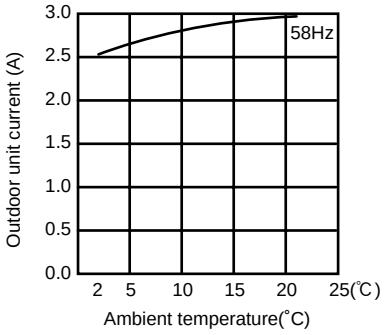

SUZ-A12VR

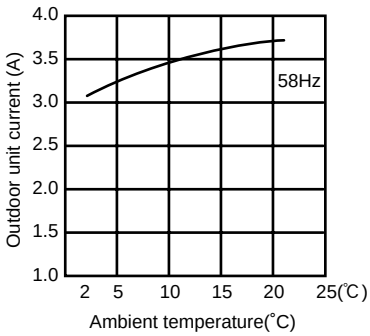

SUZ-A18VR

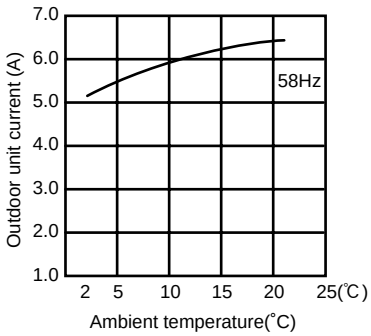

B.1.7 4-WAY AIR FLOW SYSTEM

1. Fresh air intake (Location for installation)

At the time of installation, use the duct holes (cut out) located at the positions shown in following diagram, as and when required.

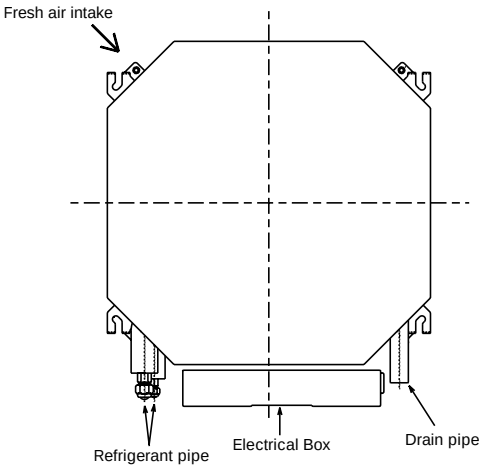

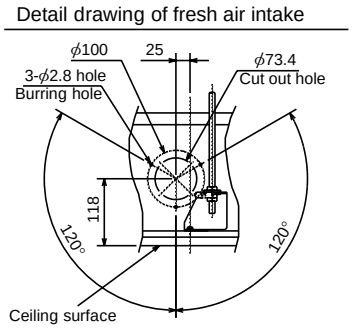

2. Fresh air intake amount & static pressure characteristics

SLZ-A09AR
SLZ-A12AR
SLZ-A18AR

Taking air into the unit

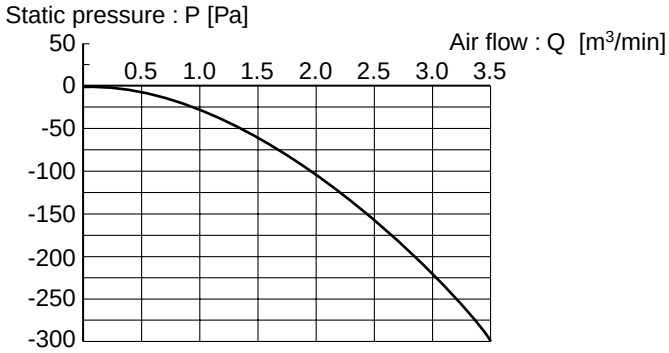

NOTE: Fresh air intake amount should be 20% or less of whole air amount to prevent dew dripping.

How to read curves

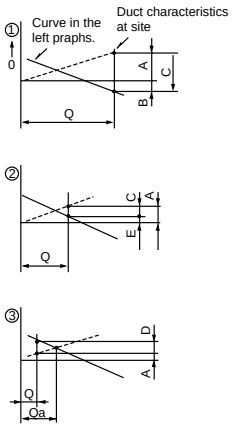

Q…Planned amount of fresh air intake <m³/min>
A…Static pressure loss of fresh air intake duct system with air flow amount Q <Pa>
B…Forced static pressure at air conditioner inlet with air flow amount Q <Pa>
C…Static pressure of booster fan with air flow amount Q <Pa>
D…Static pressure loss increase amount of fresh air intake dust system for air flow amount Q <Pa>
E…Static pressure of indoor unit with air flow amount Q <Pa>
Qa…Estimated amount of fresh air intake with out D <m³/min>

3. Interlocking operation method with duct fan (Booster fan)

●Whenever the indoor unit is operating, the duct fun operates.
(1)Connect the optional multiple remote controller adapter(PAC-SA88HA-E)to the connector CN51 on the indoor controller board.
(2)Drive the relay after connecting the 12V DC relay between the Yellow and Orange connector lines.
Use a relay under 1W.
MB: Electromagnetic switch power relay for duct fan.
X: Auxiliary relay (12V DC LY-1F)

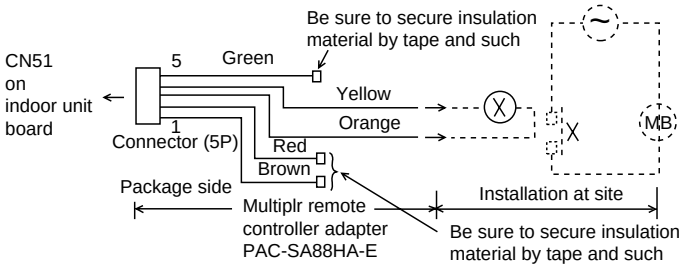

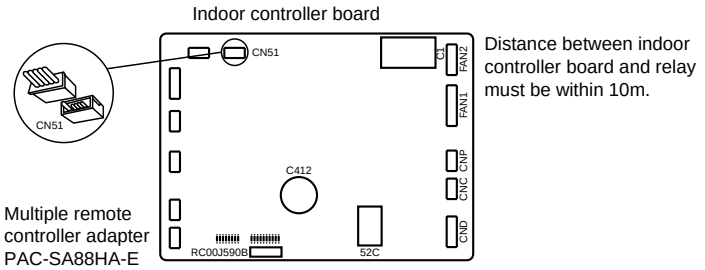

4. Fixing of horizontal vane

Horizontal vane of each air outlet can be fixed according to the environment, which is installed.

Setting procedure

1) Turn off a main power supply (Turn off a breaker).
2) Disconnect the vane motor connector of the direction of the arrow with pressing the unlocking button as shown in figure below.
   Electricity insulate the disconnected connector with the vinyl tape.

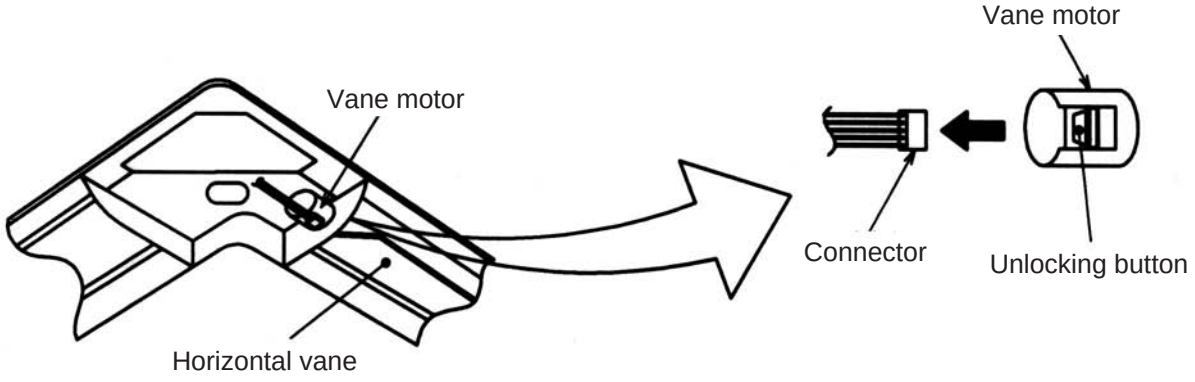

3) Set a auto vane of the air outlet, which tries to fixed by the hand slowly within the range in the table below.

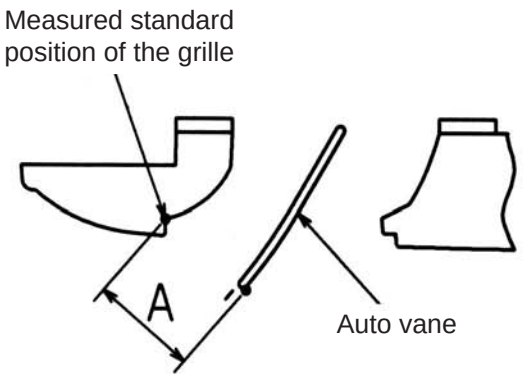

<Set range>

Standard of horizontal position	Level 30° (Min.)	Downward 45°	Downward 55°	Downward 70° (Max.)
Dimension A (mm)	21	25	28	30

※ Dimension between 21 mm and 30 mm can be arbitrarily set.

Caution ⚠	Do not set the dimension out of the range.
	Erroneous setting could cause dew drips, smudge on ceiling or malfunction of unit.

B.1.8 NOISE CRITERIA CURVES

SLZ-A09AR

<50Hz>

NOTCH	SPL(dB)	LINE
Hi	38	○—○
Me	35	△—△
Lo	32	□—□

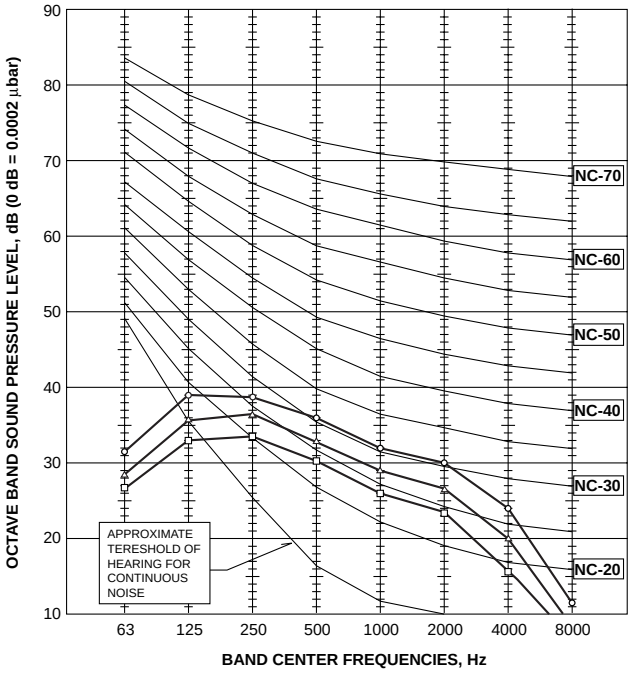

SLZ-A12AR

<50Hz>

NOTCH	SPL(dB)	LINE
Hi	39	○—○
Me	37	△—△
Lo	34	□—□

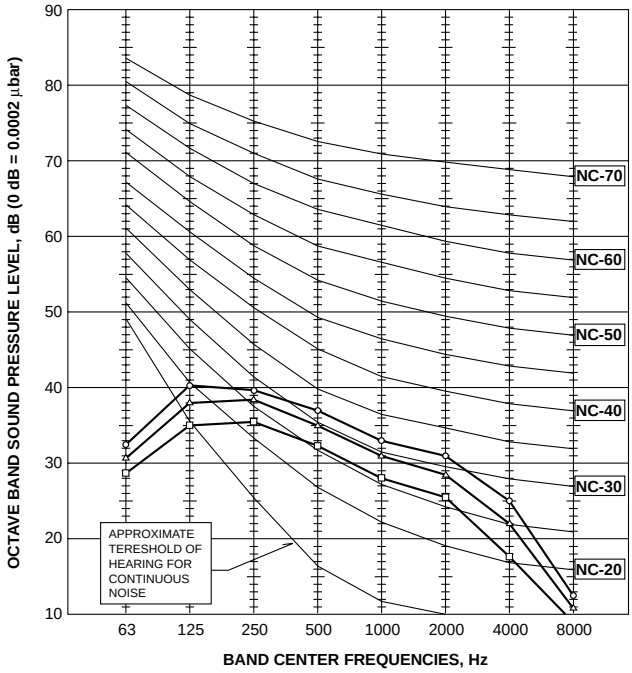

SLZ-A18AR

<50Hz>

NOTCH	SPL(dB)	LINE
Hi	40	○—○
Me	38	△—△
Lo	35	□—□

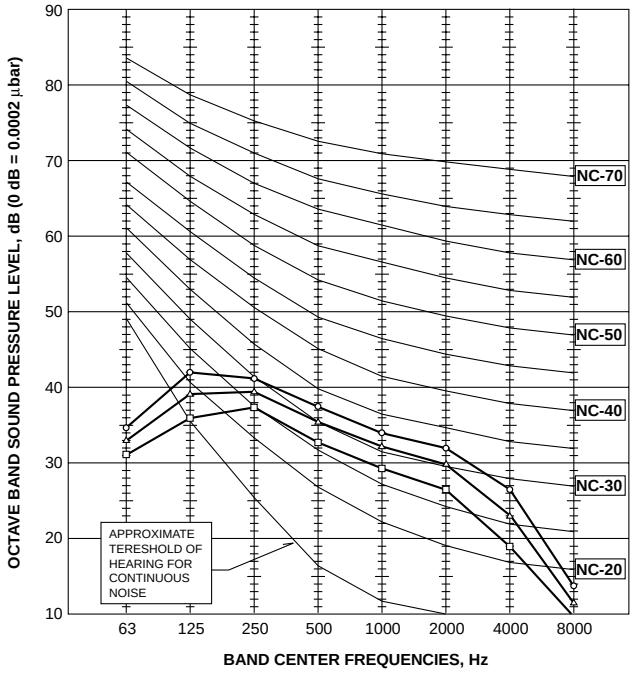

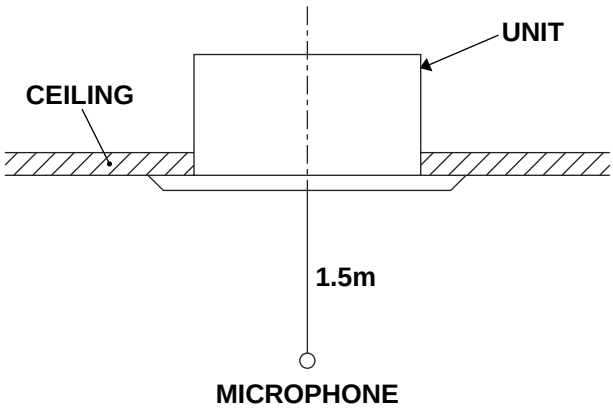

NOTE: The sound level is measured in an anechoic room where echoes are few, when compressor stops. The sound may be bigger than displayed level under actual installation condition by surrounding echoes. The sound level can be higher by about 2 dB than the displayed level during cooling and heating operation.

B.1.9 OUTLET AIR SPEED AND COVERAGE RANGE

MODEL	Air flow (m^3/min)	Air speed (m/sec)	Coverage (m)
SLZ-A09AR	10	4.0	5.7
SLZ-A12AR	11	4.9	7.4
SLZ-A18AR	11	4.9	7.4

B.1.10 REMOTE CONTROLLER

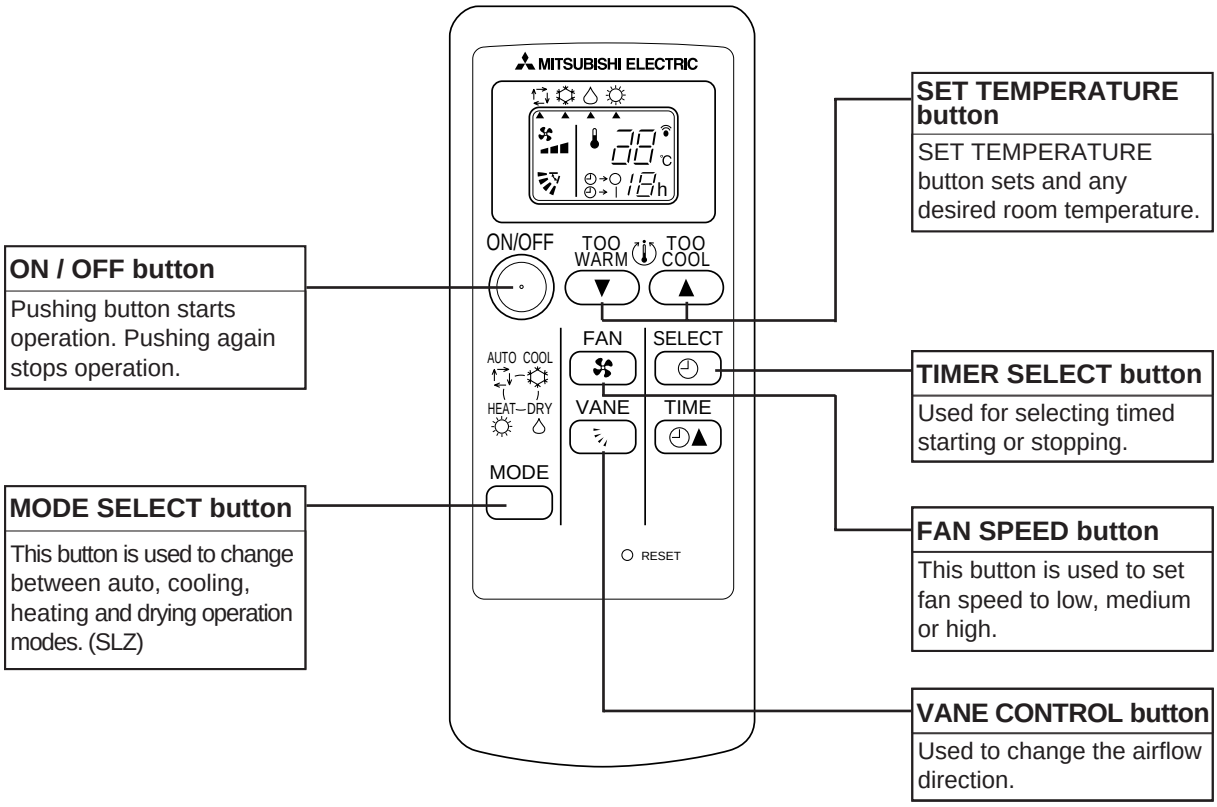

Attention :

● Avoid operation of buttons with fingernails or other sharp objects. Sharp objects may scratch remote controller.

B.1.11 TROUBLESHOOTING

Before you call out a repair man, check the following table to see whether there is a simple solution to your problem.

Problem	Solution
Unit does not cool or heat very well.	Clean the filter.
The airflow direction suddenly changes.	After one hour of cooling mode or drying mode operation with the airflow in a downward direction, the unit will automatically change to the "Horizontal airflow" mode.
	When the unit is in the heating or defrosting mode, it will automatically change to the "Horizontal airflow" mode.
A white mist is expelled from the indoor unit.	This may occur just after the unit is turned on when a high level of humidity is present in the room.
The air conditioner cannot be operated for about 3 minutes when restarted.	This protects the air conditioner according to instructions from the microprocessor. Please wait.
Air does not blow out soon in the heating operation.	Please wait as the air conditioner is preparing to blow out warm air.
The start and stop functions are not available just after restarting the unit.	Wait about three minutes (operation has stopped to prevent damage to the air conditioner).
The operation is stopped for about 10 minutes in the heating operation.	Defrosting of the outdoor unit is being done (Defrosting operation). Since this is completed in 10 minutes, please wait. (When the external temperature is too low and humidity is too high, frost is formed.)

Problem	Solution
The operation lamp of the wireless remote controller's receiver is flashing.	A self-diagnostic function is being performed to preserve the air conditioner. * Do not attempt to make repairs yourself. Turn the main switch off and contact the dealer from whom you bought the air conditioner. Provide him or her with the name of the unit and the number of times the operation lamp of the wireless remote controller's receiver flashes.
Unit operates even if ON/OFF button has not been pressed.	It occurs for the AUTO RESTART FUNCTION mode. Press the ON/OFF button to stop operation.
No indication of wireless remote controller, indication is dim, or signal transmission cannot reach remote controller sensor.	The batteries have run out. Replace the batteries with new ones (size AAA), and then press the reset button. Though both alkaline batteries and manganese batteries can be used, alkaline batteries are recommended because their service life is longer than that of manganese batteries. * If indication is not detected even when new batteries have been replaced, check that the batteries have been installed properly.

If none of the above apply, turn the main switch off and contact the dealer from whom you bought the air-conditioner, telling him the model name and the nature of the problem. Do not try to fix the unit yourself.

In any of the following cases, turn off the main power switch and contact your local dealer for service:
- The operation lamp (on the main unit) flashes.
- The switches do not work properly.
- The circuit breaker trips frequently (or the fuse blows frequently).
- Water has accidentally been splashed into the unit.
- Water leaks from the unit.
- Something is accidentally dropped into the air-conditioner.
- An unusual noise is heard during operation.

The following do not indicate any malfunction:
Odours: smells such as tobacco or cosmetic odours may persist after they have been sucked into the unit.
Sound of liquid flowing inside indoor unit: this can occur during or after operation and is simply the sound of refrigerant being circulated inside the unit.
Ticking sound coming from indoor unit: this can occur when cooling or heating has just begun or has just stopped. It is caused by the indoor unit shrinking or expanding slightly due to the change in temperature.

B.1.12 INSTALLATION PROCEDURE

1. Safety precautions

- **Be sure to read "The following should always be observed for safety" before installing the air conditioner.**
- **Be sure to observe the cautions specified here as they include important items related to safety.**
- **The indications and meanings are as follows.**

⚠ **Warning:**
Could lead to death, serious injury, etc.

⚠ **Caution:**
Could lead to serious injury in particular environments when operated incorrectly.

- **After reading this manual, be sure to keep it together with the instruction manual in a handy place on the customer's site.**

⃠ : Indicates an action that must be avoided.
: Indicates that important instructions must be followed.
: Indicates a part which must be grounded.
: Indicates that caution should be taken with rotating parts.
: Indicates that the main switch must be turned off before servicing.
: Beware of electric shock.
: Beware of hot surface.

⚠ **Warning:**
Carefully read the labels affixed to the main unit.

⚠ **Warning:**

- **Do not install it by yourself (customer).**
  Incomplete installation could cause injury due to fire, electric shock, the unit falling or leakage of water. Consult the dealer from whom you purchased the unit or special installer.
- **Install the unit securely in a place which can bear the weight of the unit.**
  When installed in an insufficient strong place, the unit could fall causing injured.
- **Use the specified wires to connect the indoor and outdoor units securely and attach the wires firmly to the terminal board connecting sections so the stress of the wires is not applied to the sections.**
  Incomplete connecting and fixing could cause fire.
- **Do not use intermediate connection of the power cord or the extension cord and do not connect many devices to one AC outlet.**
  It could cause a fire or an electric shock due to defective contact, defective insulation, exceeding the permissible current, etc.
- **Check that the refrigerant gas does not leak after installation has completed.**
- **Perform the installation securely referring to the installation manual.**
  Incomplete installation could cause a personal injury due to fire, electric shock, the unit falling or leakage of water.
- **Perform electrical work according to the installation manual and be sure to use an exclusive circuit.**
  If the capacity of the power circuit is insufficient or there is incomplete electrical work, it could result in a fire or an electric shock.
- **Attach the electrical part cover to the indoor unit and the service panel to the outdoor unit securely.**
  If the electrical part cover in the indoor unit and/or the service panel in the outdoor unit are not attached securely, it could result in a fire or an electric shock due to dust, water, etc.
- **Be sure to use the part provided or specified parts for the installation work.**
  The use of defective parts could cause an injury or leakage of water due to a fire, an electric shock, the unit falling, etc.
- **Ventilate the room if refrigerant leaks during operation.**
  If the refrigerant comes in contact with a flame, poisonous gases will be released.

⚠ **Caution:**

- **Perform grounding.**
  Do not connect the ground wire to a gas pipe, water pipe arrester or telephone ground wire. Defective grounding could cause an electric shock.
- **Do not install the unit in a place where an inflammable gas leaks.**
  If gas leaks and accumulates in the area surrounding the unit, it could cause an explosion.
- **Install a ground leakage breaker depending on the installation place (where it is humid).**
  If a ground leakage breaker is not installed, it could cause an electric shock.
- **Perform the drainage/piping work securely according to the installation manual.**
  If there is a defect in the drainage/piping work, water could drop from the unit and household goods could be wet and damaged.
- **Fasten a flare nut with a torque wrench as specified in this manual.**
  When fastened too tight, a flare nut may broken after a long period and cause a leakage of refrigerant.

2. Selecting the installation location

2.1. Indoor unit

- Where airflow is not blocked.
- Where cool air spreads over the entire room.
- Where it is not exposed to direct sunshine.
- At a distance 1 m or more away from your TV and radio (to prevent picture from being distorted or noise from being generated).
- In a place as far away as possible from fluorescent and incandescent lights (so the infrared remote control can operate the air conditioner normally).
- Where the air filter can be removed and replaced easily.

⚠ **Warning:**
Mount the indoor unit into a ceiling strong enough to withstand the weight of the unit.

2.2. Outdoor unit

- Where it is not exposed to strong wind.
- Where airflow is good and dustless.
- Where it is not exposed to rain and direct sunshine.
- Where neighbours are not annoyed by operation sound or hot air.
- Where rigid wall or support is available to prevent the increase of operation sound or vibration.
- Where there is no risk of combustible gas leakage.
- When installing the unit at a high level, be sure to fix the unit legs.
- Where it is at least 3 m away from the antenna of TV set or radio. (Otherwise, images would be disturbed or noise would be generated.)
- Install the unit horizontally.

⚠ **Caution:**
Avoid the following places for installation where air conditioner trouble is liable to occur.

- **Where there is too much machine oil.**
- **Salty environment as seaside areas.**
- **Hot-spring areas.**
- **Where sulfide gas exists.**
- **Other special atmospheric areas.**

2. Selecting the installation location

2.3. Wireless remote controller mounting

- Place of mounting
  - Where it is easy to operate and easily visible.
  - Where children can not touch.
- Mounting
  Select a position about 1.2 m above the floor, check that signals from the remote controller are surely received by the indoor unit from that position ('beep' or 'beep-beep' receiving tone sounds). After that, attach remote controller holder to a pillar or wall and set the wireless remote controller.

In rooms where inverter type fluorescent lamps are used, the signal from the wireless remote controller may not be received.

3. Installation diagram

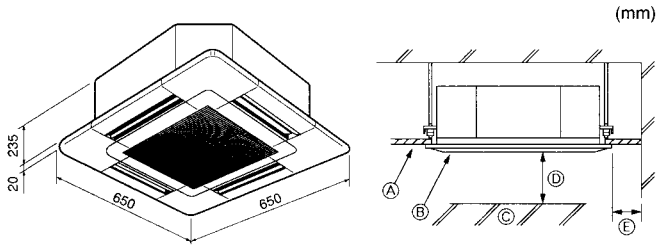

Fig. 3-1

3.1. Indoor unit (Fig. 3-1)

Ⓐ Ceiling
Ⓑ Grille
Ⓒ Obstacle
Ⓓ Min. 1000 mm
Ⓔ Min. 500 mm (Entire periphery)
If setting the maintenance space for Ⓔ, be sure to leave is a minimum of 700 mm.

■ SUZ-A09/A12

■ SUZ-A18

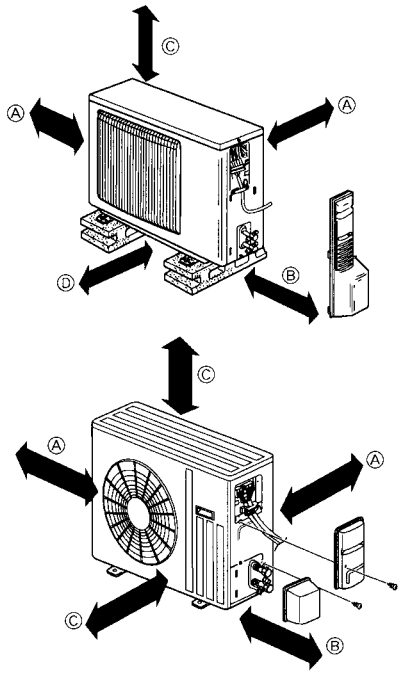

Fig. 3-2

3.2. Outdoor unit (Fig. 3-2)

Ventilation and service space

■ **SUZ-A09/A12**

Ⓐ 100 mm or more
Ⓑ 350 mm or more
Ⓒ Basically open 100 mm or more without any obstruction in front and on both sides of the unit.
Ⓓ 200 mm or more (Open two sides of left, right, or rear side.)

■ **SUZ-A18**

Ⓐ 100 mm or more
Ⓑ 350 mm or more
Ⓒ 500 mm or more

When the piping is to be attached to a wall containing metals (tin plated) or metal netting, use a chemically treated wooden piece 20 mm or thicker between the wall and the piping or wrap 7 to 8 turns of insulation vinyl tape around the piping.

Units should be installed by licensed contractor accordingly to local code requirement.

4. Installing the indoor unit

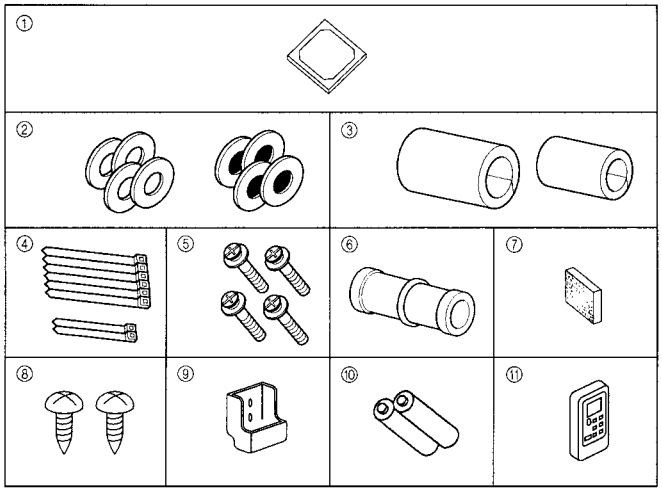

Fig. 4-1

4.1. Check the indoor unit accessories (Fig. 4-1)

The indoor unit should be supplied with the following accessories.

	Accessory name	Q'ty
①	Installation template	1
②	Washers (with insulation)	4
	Washers (without insulation)	4
③	Pipe cover (for refrigerant piping joint)	
	small diameter (liquid)	1
	large diameter (gas)	1
④	Band (large)	6
	Band (small)	2
⑤	Screw with washer (M5 × 25) for mounting grille	4
⑥	Drain socket	1
⑦	Insulation	1
⑧	Fixing screw for ⑨ 3.5 × 1.6 (Black)	2
⑨	Remote controller holder	1
⑩	Battely (AAA)	2
⑪	Wireless remote controller	1

4. Installing the indoor unit

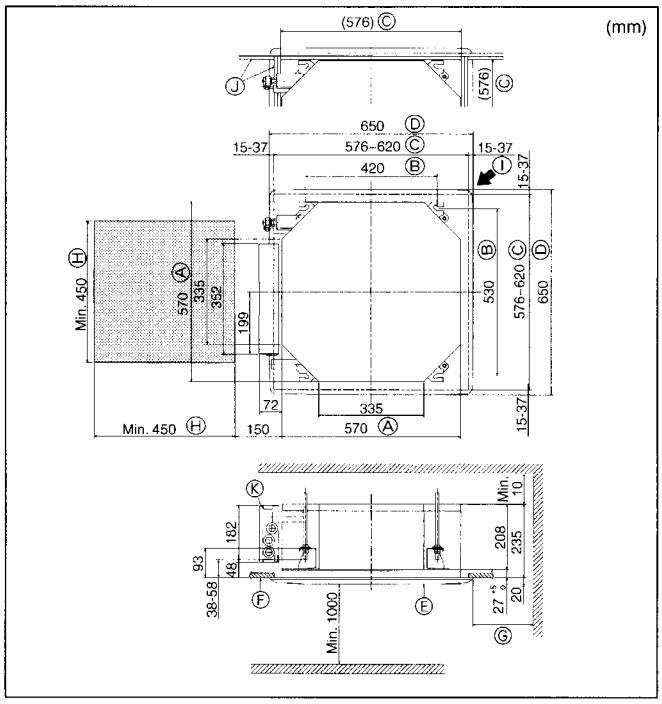

Fig. 4-2

4.2. Ceiling openings and suspension bolt installation locations (Fig. 4-2)

- Using the installation template (top of the package) and the gauge (supplied as an accessory with the grille), make an opening in the ceiling so that the main unit can be installed as shown in the diagram. (The method for using the template and the gauge are shown.)
  - * Before using, check the dimensions of template and gauge, because they change due to fluctuations of temperature and humidity.
  - * The dimensions of ceiling opening can be regulated within the range shown in following diagram; so center the main unit against the opening of ceiling, ensuring that the respective opposite sides on all sides of the clearance between them becomes identical.
- Use M10 (3/8") suspension bolts.
  - * Suspension bolts are to be procured at the field.
- Install securely, ensuring that there is no clearance between the ceiling panel & grille, and between the main unit & grille.

Ⓐ Outer side of main unit
Ⓑ Bolt pitch
Ⓒ Ceiling opening
Ⓓ Outer side of Grille
Ⓔ Grille
Ⓕ Ceiling
Ⓖ Min. 500 mm (Entire periphery)
If setting the maintenance space for Ⓖ, be sure to leave is a minimum of 700 mm.
Ⓗ Maintenance space
Ⓘ Fresh air intake
Ⓙ Angle
Ⓚ Electric component box

* Note that the space between ceiling panel of the unit and ceiling slab and etc must be 10 to 15 mm to be left.
* Leave the maintenance space at the electric component box end.

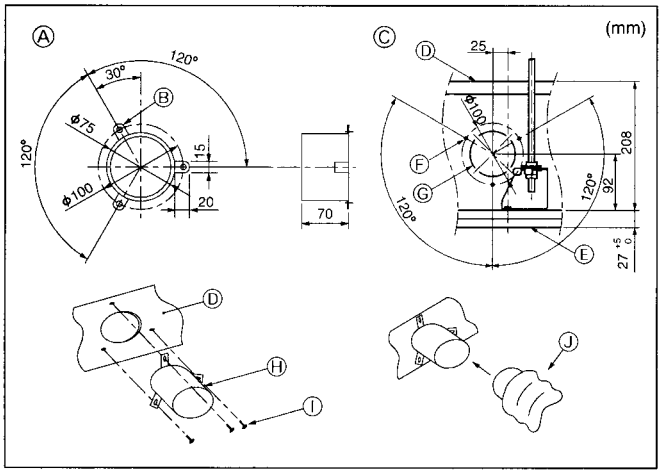

Fig. 4-3

4.3. Installation of duct (in case of fresh air intake) (Fig. 4-3)

⚠ **Caution:**

Linkage of duct fan and air conditioner

In case that a duct fan is used, be sure to make it linked with the air conditioner when outside air is taken.

Do not run the duct fan only. It can cause dew drop.

Making a duct flange (prepared locally)

- The shape of duct flange shown left is recommended.

Installation of duct flange

- Cut out the cutout hole. Do not knock it out.
- Install a duct flange to the cutout hole of the indoor unit with three 4 × 10 tapping screws which should be prepared locally.

Installation of duct (should be prepared locally)

- Prepare a duct of which inner diameter fits into the outer diamete of the duct flange.
- In case that the environment above the ceiling is high temperature and high humidity, wrap the duct in a heat insulate to avoid causing dew drop on the wall.

Ⓐ Duct flange recommended shape (Thickness:0.8 or more)
Ⓑ 3-ø5 hole
Ⓒ Detail drawing of fresh air intake
Ⓓ Indoor unit
Ⓔ Ceiling surface
Ⓕ 3-ø2.8 Burring hole
Ⓖ ø73.4 cutout hole
Ⓗ Duct flange (Prepared locally)
Ⓘ 4 × 10 Tapping screw (Prepared locally)
Ⓙ Duct

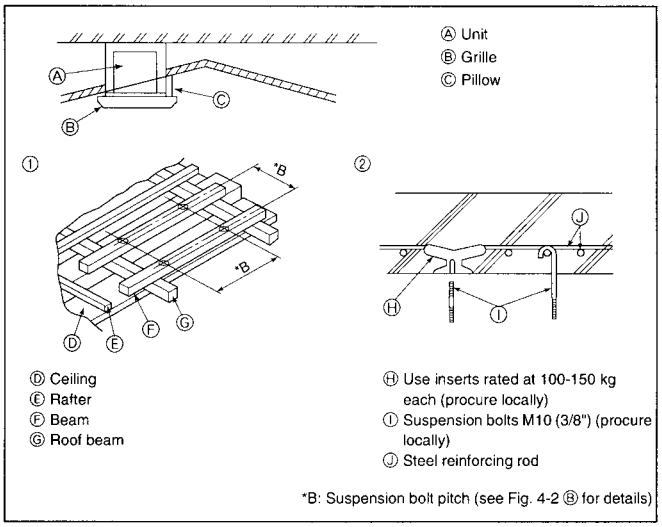

Fig. 4-4

4.4. Suspension structure (Give site of suspension strong structure) (Fig. 4-4)

- The ceiling work differs according to the construction of the building. Buidling constructors and interior decorators should be consulted for details.

(1) Extent of ceiling removal: The ceiling must be kept completely horizontal and the ceiling foundation (framework: wooden slats and slat holders) must be reinforced in order to protect the ceiling from vibration.
(2) Cut and remove the ceiling foundation.
(3) Reinforce the ends of the ceiling foundation where it has been cut and add ceiling foundation for securing the ends of the ceiling board.
(4) When installing the unit on a slanting ceiling, interlock a pillow between the ceiling and the grille and set so that the unit is installed horizontally.

① Wooden structures

- Use tie beams (single storied houses) or second floor beams (two story houses) as reinforcing members.
- Wooden beams for suspending air conditioners must be sturdy and their sides must be at least 6 cm long if the beams are separated by not more than 90 cm and their sides must be at least 9 cm long if the beams are separated by as much as 180 cm. The size of the suspension bolts should be ø10 (3/8"). (The bolts do not come with the unit.)

② Ferro-concrete structures

Secure the suspension bolts using the method shown, or use steel or wooden hangers, etc. to install the suspension bolts.

4. Installing the indoor unit

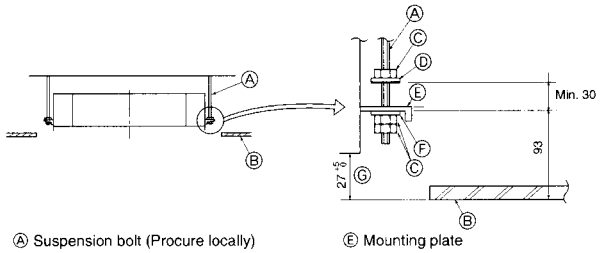

Ⓐ Suspension bolt (Procure locally)
Ⓑ Ceiling
Ⓒ Nut (Procure locally)
Ⓓ Washer (with insulation) (Accessory)
Ⓔ Mounting plate
Ⓕ Washer (without insulation) (Accessory)
Ⓖ Check using the Installation gauge

Fig. 4-5

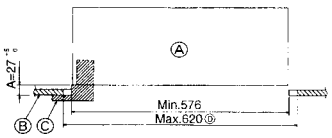

Ⓐ Main unit
Ⓑ Ceiling
Ⓒ Gauge (Grille accessory)
Ⓓ Ceiling opening dimensions

Fig. 4-6

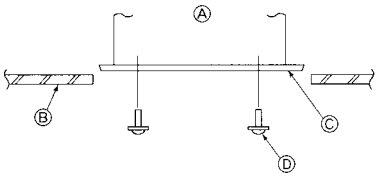

Ⓐ Main unit
Ⓑ Ceiling
Ⓒ Installation template (Accessory)
Ⓓ Screw with washer (Accessory)

Fig. 4-7

4.5. Unit suspension procedures (Fig. 4-5)

Suspend the main unit as shown in the diagram.

1. In advance, set the parts onto the suspension bolts in the order of the washers (with insulation), washers (without insulation) and nuts (double).
   - Fit the washer with cushion so that the insulation faces downward.
   - In case of using upper washers to suspend the main unit, the lower washers (with insulation) and nuts (double) are to be set later.
2. Lift the unit to the proper height of the suspension bolts to insert the mounting plate between washers and then fasten it securely.
3. When the main unit can not be aligned against the mounting hole on the ceiling, it is adjustable owing to a slot provided on the mounting plate. (Fig. 4-6)
   - Make sure that step A is performed within 27-32 mm. Damage could result by failing to adhere to this range.

4.6. Confirming the position of main unit and tightening the suspension bolts (Fig. 4-7)

- Using the gauge attached to the grille, ensure that the bottom of the main unit is properly aligned with the opening of the ceiling. Be sure to confirm this, otherwise condensation may form and drip due to air leakage etc.
- Confirm that the main unit is horizontally levelled, using a level or a vinyl tube filled with water.
- After checking the position of the main unit, tighten the nuts of the suspension bolts securely to fasten the main unit.
- The installation template can be used as a protective sheet to prevent dust from entering the main unit when the grilles are left unattached for a while or when the ceiling materials are to be lined after installation of the unit is finished.

* As for the details of fitting, refer to the instructions given on the Installation template.

5. Refrigerant piping work

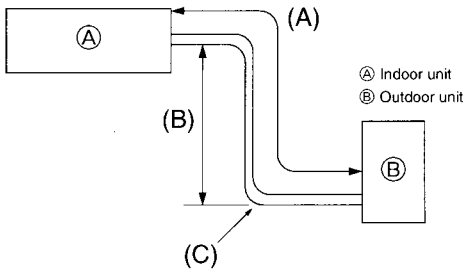

Ⓐ Indoor unit
Ⓑ Outdoor unit

Fig. 5-1

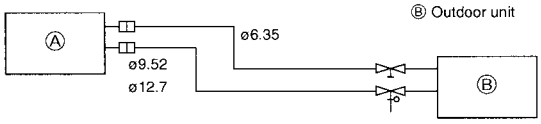

Ⓐ Indoor unit
Ⓑ Outdoor unit

Fig. 5-2

5.1. Refrigerant pipe (Fig. 5-1)

▶ **Check that the difference between the heights of the indoor and outdoor units, the length of refrigerant pipe, and the number of bends in the pipe are within the limits shown below.**

Models	(A) Pipe length (one way)	(B) Height difference	(C) Number of bends (one way)
SLZ-A09/A12	max. 20 m	max. 12 m	max. of 10
SLZ-A18	max. 30 m	max. 15 m	max. of 10

- Height difference limitations are binding regardless of which unit, indoor or outdoor, is positioned higher.
- Refrigerant adjustment ... If pipe length exceeds 7 m, additional refrigerant (R410A) charge is required.
  (The outdoor unit is charged with refrigerant for pipe length up to 7 m.)

Pipe length	Up to 7 m	No additional charge is required.
	Exceeding 7 m	Additional charge is required. (Refer to the table below.)
Refrigerant to be added	SLZ-A09/A12 type	30 g × (refrigerant piping length (m) -7)
	SLZ-A18 type	50 g × (refrigerant piping length (m) -7)

Piping preparation

- Refrigerant pipes of 3, 5, 7, 10 and 15 m are available as optional items.

(1) Table below shows the specifications of pipes commercially available.

Model	Pipe	Outside diameter mm	Outside diameter inch	Min wall thickness	Insulation thickness	Insulation material
SLZ-A09	For liquid	6.35	1/4	0.8 mm	8 mm	Heat resisting foam plastic 0.045 specific gravity
	For gas	9.52	3/8	0.8 mm	8 mm	
SLZ-A12	For liquid	6.35	1/4	0.8 mm	8 mm	
	For gas	9.52	3/8	0.8 mm	8 mm	
SLZ-A18	For liquid	6.35	1/4	0.8 mm	8 mm	
	For gas	12.7	1/2	0.8 mm	8 mm	

(2) Ensure that the 2 refrigerant pipes are well insulated to prevent condensation.
(3) Refrigerant pipe bending radius must be 100 mm or more.

⚠ **Caution:**
Using careful insulation of specified thickness. Excessive thickness prevents storage behind the indoor unit and smaller thickness causes dew drippage.

5. Refrigerant piping work

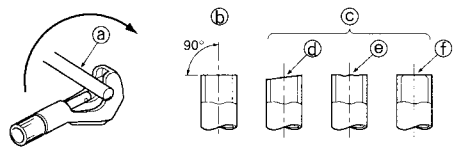

ⓐ Copper tubes
ⓑ Good
ⓒ No good
ⓓ Tilted
ⓔ Uneven
ⓕ Burred

Fig. 5-3

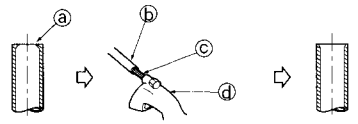

ⓐ Burr
ⓑ Copper tube/pipe
ⓒ Spare reamer
ⓓ Pipe cutter

Fig. 5-4

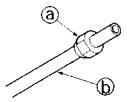

ⓐ Flare nut
ⓑ Copper tube

Fig. 5-5

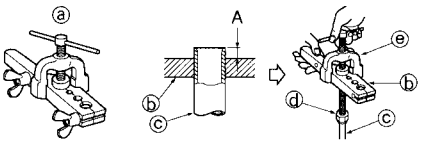

ⓐ Flaring tool
ⓑ Die
ⓒ Copper tube
ⓓ Flare nut
ⓔ Yoke

Fig. 5-6

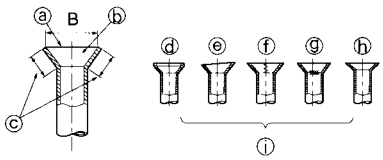

Fig. 5-7

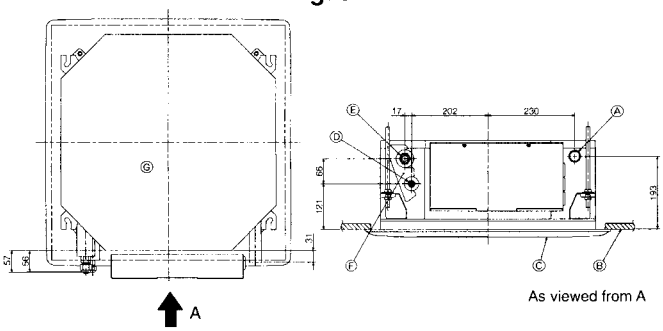

As viewed from A

Fig. 5-8

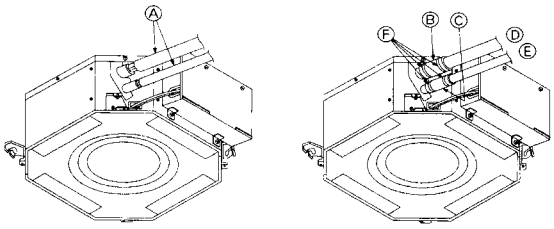

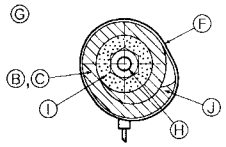

Ⓐ Refrigerant pipe and insulating material (Procure locally)
Ⓑ Pipe cover (large) (Accessory)
Ⓒ Pipe cover (small) (Accessory)
Ⓓ Refrigerant pipe (gas)
Ⓔ Refrigerant pipe (liquid)
Ⓕ Band (Accessory)
Ⓖ Cross-sectional view of connection
Ⓗ Refrigerant pipe
Ⓘ Insulating material
Ⓙ Squeeze

Fig. 5-9

5.2. Flaring work

- Main cause of gas leakage is defect in flaring work.
  Carry out correct flaring work in the following procedure.

5.2.1. Pipe cutting (Fig. 5-3)

- Using a pipe cutter cut the copper tube correctly.

5.2.2. Burrs removal (Fig. 5-4)

- Completely remove all burrs from the cut cross section of pipe/tube.
- Put the end of the copper tube/pipe to downward direction as you remove burrs in order to avoid burrs drop in the tubing.

5.2.3. Putting nut on (Fig. 5-5)

- Remove flare nuts attached to indoor and outdoor unit, then put them on pipe/tube having completed burr removal.
  (not possible to put them on after flaring work)

5.2.4. Flaring work (Fig. 5-6)

- Carry out flaring work using flaring tool as shown at the right.

Pipe diameter (mm)	Dimension	
	A (mm)	B $^{+0}_{-0.4}$ (mm)
	When the tool for R410A is used	
	Clutch type	
6.35	0 - 0.5	9.1
9.52	0 - 0.5	13.2
12.7	0 - 0.5	16.6

Firmly hold copper tube in a die in the dimension shown in the table at above.

5.2.5. Check (Fig. 5-7)

- Compare the flared work with a figure in rightside hand.
- If flare is noted to be defective, cut off the flared section and do flaring work again.

ⓐ Smooth all around
ⓑ Inside is shining without any scratches
ⓒ Even length all around
ⓓ Too much
ⓔ Tilted
ⓕ Scratch on flared plane
ⓖ Cracked
ⓗ Uneven
ⓘ Bad examples

5.3. Refrigerant and drainage piping locations (Fig.5-8)

Ⓐ Drain pipe
Ⓑ Ceiling
Ⓒ Grille
Ⓓ Refrigerant pipe (liquid)
Ⓔ Refrigerant pipe (gas)
Ⓕ Water supply inlet
Ⓖ Main unit

5.4. Pipe connection (Fig. 5-9)

Indoor unit

1) When using commercially available copper pipes:

- Apply thin layer of refrigerant oil to pipe and joint seating surface before tightening flare nut.
- Use two wrenches to tighten piping connections.
- Air-purge the refrigerant piping using your own refrigerant gas (don't air-purge the refrigerant charged in the outdoor unit).
- Use leak detector or soapy water to check for gas leaks after connections are completed.
- Use refrigerant piping insulation provided to insulate indoor unit connections. Insulate carefully following shown below.

2) Heat insulation for refrigerant pipes:

① Wrap the enclosed large-sized pipe cover around the gas pipe, making sure that the end of the pipe cover touches the side of the unit.
② Wrap the enclosed small-sized pipe cover around the liquid pipe, making sure that the end of the pipe cover touches the side of the unit.
③ Secure both ends of each pipe cover with the enclosed bands. (Attach the bands 20 mm from the ends of the pipe cover.)

See that stop valve on outdoor unit is fully shut (unit is shipped with valve shut). After all piping connections between indoor and outdoor unit have been completed, vaccuum-purge air from system through the service port for the stop valve on the outdoor unit.

After completing procedures above, open outdoor unit stop valves stem fully. This completes connection of refrigerant circuit between indoor and outdoor units. Stop valve instructions are marked on outdoor unit.

5. Refrigerant piping work

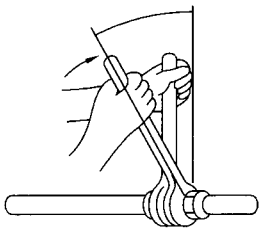

Fig. 5-10

- Apply a thin coat of refrigeration oil on the seat surface of pipe. (Fig. 5-10)
- For connection first align the center, then tighten the first 3 to 4 turns of flare nut.
- Use tightening torque table below as a guideline for indoor unit side union joint section, and tighten using two wrenches. Excessive tightening damages the flare section.

Copper pipe O.D. (mm)	Flare nut O.D. (mm)	Tightening torque (N·m)
ø6.35	17	14 - 18
ø9.52	22	34 - 42
ø12.7	26	49 - 61

⚠ Warning:
Be careful of flying flare nut! (Internally pressurized)
Remove the flare nut as follows:
1. **Loosen the nut until you hear a hissing noise.**
2. **Do not remove the nut until the gas has been completely released (i.e., hissing noise stops).**
3. **Check that the gas has been completely released, and then remove the nut.**

5.5. Purging procedures leak test

PURGING PROCEDURES

↓

Connect the refrigerant pipes (both the liquid and gas pipes) between the indoor and the outdoor units.

↓

Remove the service port cap of the stop valve on the side of the outdoor unit gas pipe. (The stop valve will not work in its initial state fresh out of the factory (totally closed with cap on).)

↓

Connect the gage manifold valve and the vacuum pump to the service port of the stop valve on the gas pipe side of the outdoor unit.

↓

Run the vacuum pump. (Vacuumize for more than 15 minutes.)

↓

Check the vacuum with the gage manifold valve, then close the gage manifold valve, and stop the vacuum pump.

↓

Leave it as is for one or two minutes. Make sure the pointer of the gage manifold valve remains in the same position. Confirm that the pressure gage show -0.101MPa (-760 mmHg)

↓

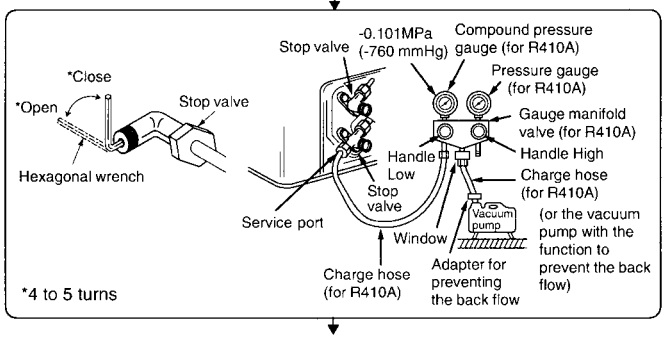

↓

Remove the gage manifold valve quickly from the service port of the stop valve.

↓

After refrigerant pipes are connected and evacuated, fully open all stop valves on gas and liquid pipe sides.
Operating without fully opening lowers the performance and causes trouble.

↓

Pipe length : 7 m maximum No gas charge is needed.	Pipe length exceeding 7 m Charge the prescribed amount of gas.

↓

Tighten the cap to the service port to obtain the initial status.

↓

Retighten the cap

↓

Leak test

6. Drainage piping work

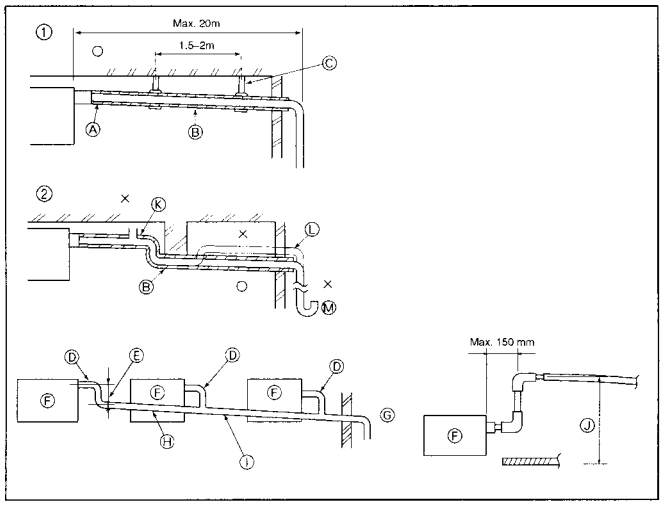

Fig. 6-1

6.1. Drainage piping work (Fig. 6-1)

- Use VP25 (O. D. ø32 PVC TUBE) for drain piping and provide 1/100 or more downward slope.
- Be sure to connect the piping joints using a polyvinyl type adhesive.
- Observe the figure for piping work.
- Use the included drain hose to change the extraction direction.

① Correct piping
② Wrong piping
Ⓐ Insulation (9 mm or more)
Ⓑ Downward slope (1/100 or more)
Ⓒ Support metal
Ⓚ Air bleeder
Ⓛ Raised
Ⓜ Odor trap

Grouped piping

Ⓓ O. D. ø32 PVC TUBE
Ⓔ Make it as large as possible
Ⓕ Indoor unit
Ⓖ Make the piping size large for grouped piping.
Ⓗ Downward slope (1/100 or more)
Ⓘ O. D. ø38 PVC TUBE for grouped piping. (9 mm or more insulation)
Ⓙ Up to 500 mm

6. Drainage piping work

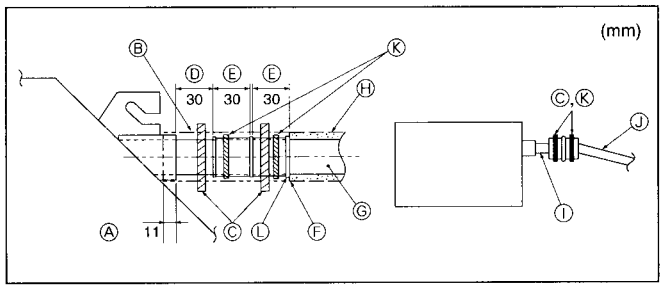

Fig. 6-2

1. Connect the drain socket (supplied with the unit) to the drain port. (Fig. 6-2) (Affix the tube using PVC adhesive then secure it with a band.)
2. Install a locally purchased drain pipe (PVC pipe, O.D. ø32). (Affix the pipe using PVC adhesive then secure it with a band.)
3. Insulate the tube and pipe. (PVC pipe, O.D. ø32 and socket)
4. Check that drain flows smoothly.
5. Insulate the drain port with insulating material, then secure the material with a band. (Both insulating material and band are supplied with the unit.)

Ⓐ Main unit
Ⓑ Insulating material
Ⓒ Band (large)
Ⓓ Drain port (transparent)
Ⓔ Insertion margin
Ⓕ Matching
Ⓖ Drain pipe (O.D. ø32 PVC TUBE)
Ⓗ Insulating material (purchased locally)
Ⓘ Transparent PVC pipe
Ⓙ O.D. ø32 PVC TUBE (Slope 1/100 or more)
Ⓚ Band (small)
Ⓛ Drain socket

7. Electrical work

(1) SLZ-A09/A12 (1:1 SYSTEM)

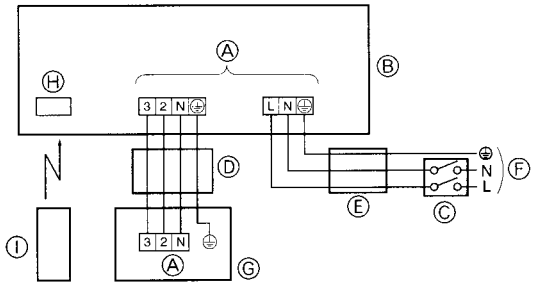

(2) SLZ-A18 (1:1 SYSTEM) OR MULTI SYSTEM

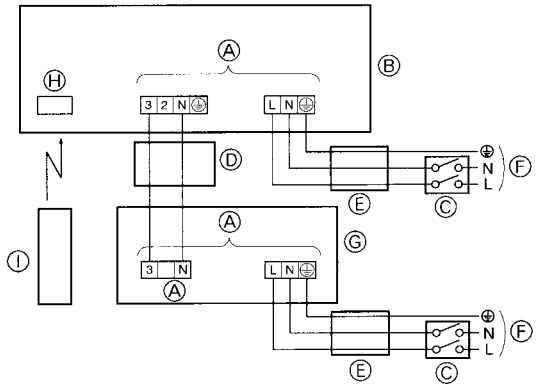

Fig. 7-1

7.1. Power supply (Fig. 7-1)

Electrical specification	Input capacity Main Switch/Fuse (A)		
Power supply	SLZ-A09	SLZ-A12	SLZ-A18
(1 phase ~/N, 220-240V, 50Hz)	10	10	20

⚠ **Warning:**

- **Do not use intermediate connection of the power cord, etc. or an extension cord or connect many devices to one AC outlet. It could cause a fire or electric shock due to defective contact, defective insulation, exceeding the permissible current, etc.**
- **Supply power should be taken from independently branched circuit. If not, it could cause a fire.**
- **A switch with at least 3 mm contact separation in each pole shall be provided by the air conditioner installation.**

Ⓐ Terminal block
Ⓑ Indoor unit (Refer to 7-2)
Ⓒ Breaker
Ⓓ 4-core cable ((2) · · · 2-core cable)
Ⓔ 3-core cable
Ⓕ Power supply
Ⓖ Outdoor unit (Refer to 7-3)
Ⓗ Receiver
Ⓘ Wireless remote controller

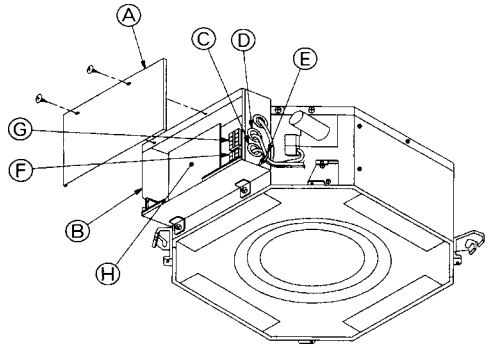

Ⓐ Electric component cover
Ⓑ Electric component box
Ⓒ Entry for power supply cable
Ⓓ Entry for Indoor/Outdoor connecting cable
Ⓔ Cable clamp
Ⓕ Power supply terminals
Ⓖ Indoor/Outdoor unit connecting terminals
Ⓗ Indoor controller

Fig. 7-2

7.2. Indoor unit (Fig. 7-2)

Work procedure

1. Remove 2 screws to detach the electric component cover.
2. Route each cable through the wiring intake into the electric component box. (Procure power supply cable and indoor/outdoor connecting cable locally.)
3. Securely connect the power supply cable and the indoor/outdoor connecting cable to the terminal blocks.
4. Secure the cables with clamps outside the electric component box.
5. Attach the electric component cover as it was.

- Fix power supply cable and indoor/outdoor connecting cable to electric component box by using buffer bushing for tensile forse. (PG connection or the like.)

⚠ **Warning:**

- **Attach the electric component cover securely. If it is attached incorrectly, it could result in a fire, electric shock due to dust, water, etc.**
- **Use the specified indoor/outdoor unit connecting cable to connect the indoor and outdoor units and fix the cable to the terminal block securely so that no stress is applied to the connecting section of the terminal block. Incomplete connection or fixing of the cable could result in a fire.**

7. Electrical work

(1) SLZ-A09/A12 (1:1 SYSTEM)

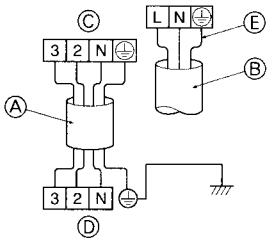

(2) SLZ-A18 (1:1 SYSTEM) OR MULTI SYSTEM

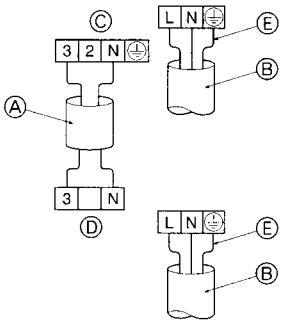

Fig. 7-3

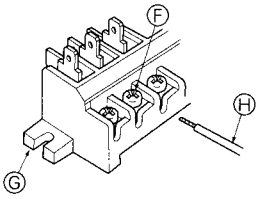

Fig. 7-4

- Perform wiring as shown in the diagram to the lower left. (Procure the cable locally) (Fig. 7-3)
  Make sure to use cables of the correct polarity only.
  - Ⓐ Connecting cable (4 core) ((2) · · · 2 core)
  - Ⓑ Power supply cable (3 core)
    - SLZ-A09/A12 : 1.0 mm² or more
    - SLZ-A18 : 1.5 mm² or more
  - * Power supply cable and Indoor unit/Outdoor unit connecting cable shall not be lighter than polychloroprene sheathed flexible cord. (design 245 IEC 57)
  - Ⓒ Indoor terminal block
  - Ⓓ Outdoor terminal block
  - Ⓔ Alway install an earth, longer than other cable.
- Connect the terminal blocks as shown in the diagram below. (Fig. 7-4)
  - Ⓕ Loosen terminal screw
  - Ⓖ Terminal block
  - Ⓗ Lead wire

⚠ **Caution:**
- **Use care not to make mis-wiring.**
- **Firmly tighten the terminal screws to prevent then from loosening.**
- **After tightening, pull the wires lightly to confirm that they do not move.**

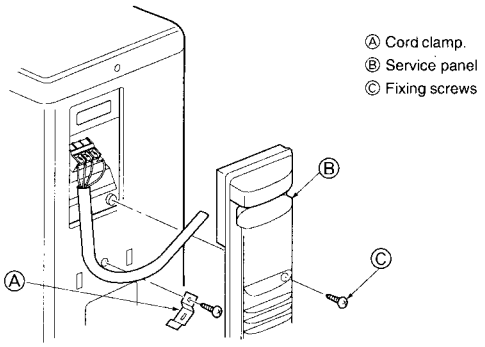

Fig. 7-5

7.3. Outdoor unit (Fig. 7-5)

- Connect cable from the indoor unit correctly on the terminal-block.
- Use the same terminal block and polarity as is used with the indoor unit.
- For aftercare maintenance, give extra length to connecting cable.

> - Both end of connecting cable (extension wire) are peeled off. When too long, or connected by cutting off the middle, peel off power supply cable to the size given in the figure.
> - Be careful not to contact connecting cable with piping.

⚠ **Caution:**
- **Use care not to make mis-wiring. (Fig. 7-6)**
- **Firmly tighten the terminal screws to prevent them from loosening.**
- **After tightening, pull the wires lightly to confirm that they do not move.**

⚠ **Warning:**
- **Be sure to attach the service panel of the outdoor unit securely. If it is not attached correctly, it could result in a fire or an electric shock due to dust, water, etc.**
- **Tighten terminal screws securely.**
- **Wiring should be done so that the power lines are not subject to tension. Otherwise, heat may be generated or fire may occur.**

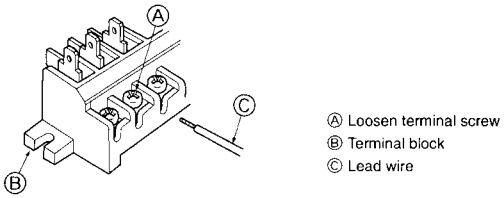

Fig. 7-6

8. Installing the grille

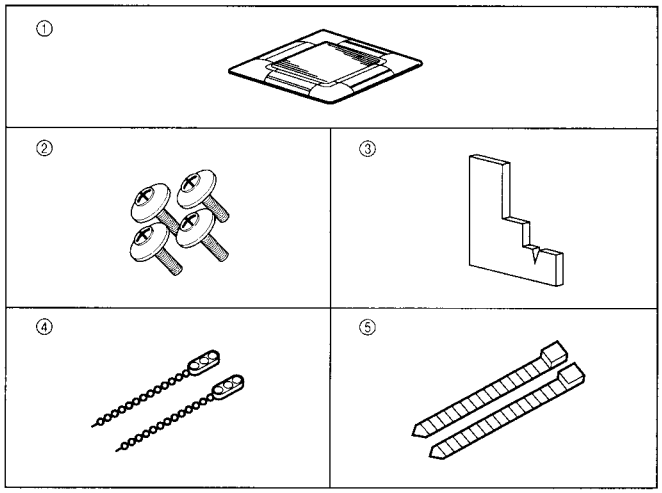

Fig. 8-1

8.1. Check the grille accessories (Fig. 8-1)

- The grille should be supplied with the following accessories.

	Accessory name	Q'ty	Remark
①	Grille	1	650 × 650 (mm)
②	Screw with washer	4	M5 × 0.8 × 25 (mm)
③	Gauge	1	
④	Fastener	2	
⑤	Band	2	

8. Installing the grille

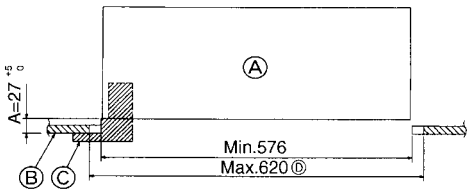

Fig. 8-2

8.2. Preparing to attach the grille (Fig. 8-2)

- With the gauge supplied with this kit, adjust and check the positioning of the unit relative to the ceiling. If the unit is not properly positioned in the ceiling, there may be air leaks, condensation may form, or the up/down vanes may not operate correctly.
- Make sure that the opening in the ceiling is within the following tolerances: 576 × 576 - 620 × 620
- Make sure that step A is performed within 27-32 mm. Damage could result by failing to adhere to this range.
  - Ⓐ Main unit
  - Ⓑ Ceiling
  - Ⓒ Gauge (Accessory)
  - Ⓓ Ceiling opening dimensions

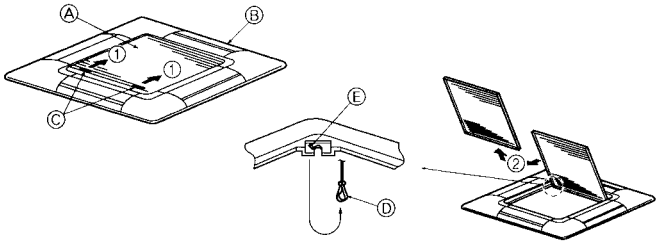

Fig. 8-3

8.2.1. Removing the intake grille (Fig. 8-3)

- Slide the levers in the direction indicated by the arrow ① to open the intake grille.
- Unlatch the hook that secures the grille.
  - * Do not unlatch the hook for the intake grille.
- With the intake grille in the "open" position, remove the hinge of the intake grille from the grille as indicated by the arrow ②.

8.2.2. Removing the corner panel (Fig. 8-4)

- Remove the screw from the corner of the corner panel. Slide the corner panel as indicated by the arrow ① to remove the corner panel.
  - Ⓐ Intake grille
  - Ⓑ Grille
  - Ⓒ Intake grille levers
  - Ⓓ Grille hook
  - Ⓔ Hole for the grille's hook
  - Ⓕ Corner panel
  - Ⓖ Screw

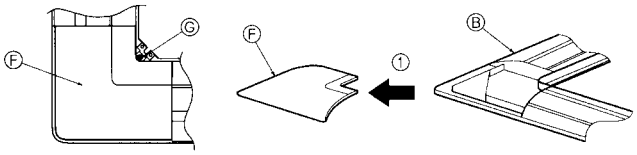

Fig. 8-4

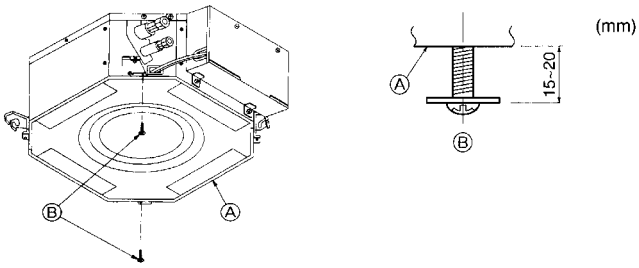

Fig. 8-5

8.3. Installing the grille

- Please pay attention because there is a restriction in the attachment position of the grille.

8.3.1. Preparations (Fig.8-5)

- Install the two enclosed screws with washer in the main unit (at the corner refrigerant pipe area and at the opposite corner) as shown in the diagram.
  - Ⓐ Main unit
  - Ⓑ Detailed diagram of installed screw with washer (accessory).

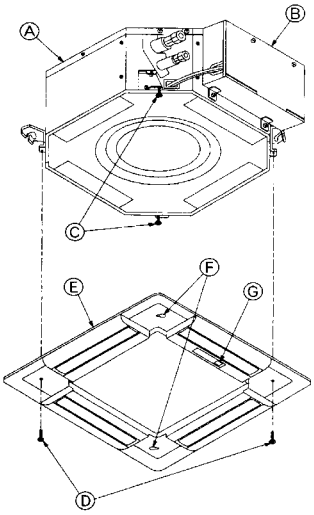

Fig. 8-6

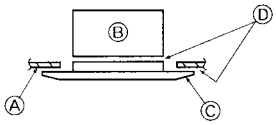

Fig. 8-7

8.3.2. Temporary installation of the grille (Fig.8-6)

- Align the electric component box of the main unit and the receiver of the grille, and then temporarily secure the grille using the bell shaped holes.
  - * Make sure that the lead wiring of the grille does not get pinched between the grille and the main unit.
  - Ⓐ Main unit
  - Ⓑ Electric component box
  - Ⓒ Screw with washer (for temporary use)
  - Ⓓ Screw with washer (Accessory)
  - Ⓔ Grille
  - Ⓕ Bell shaped hole
  - Ⓖ Receiver

8.3.3. Securing the grille (Fig. 8-7)

- Secure the grille to the main unit by tightening the previously installed two screws (with captive washer) as well as the two remaining screws (with captive washer).
  - * Make sure that there are no gaps between the main unit and the grille or the grille and the ceiling.
  - Ⓐ Ceiling
  - Ⓑ Main unit
  - Ⓒ Grille
  - Ⓓ Make sure that there are no gaps.

8. Installing the grille

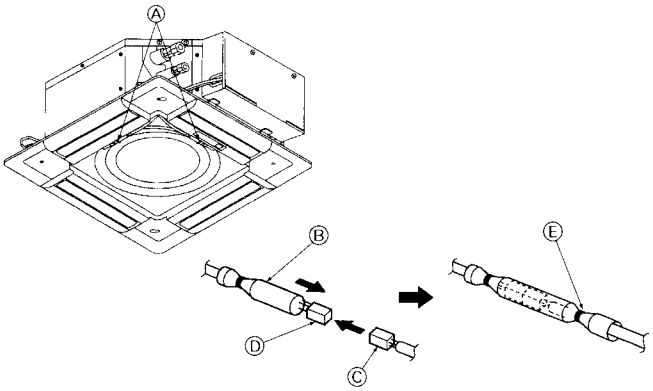

Fig. 8-8

8.3.4. Wire connection (Fig.8-8)

- Be sure to connect the unit to the connector (white:10-pole/red:9-pole). Next, attach the white glass tube that comes with the main unit so that the tube covers the connector. Close the opening of the glass tube with the band.
- Make sure that there is no slack in the each lead wire at the fastener on the grille.
  - Ⓐ Fastener (Accessory)
  - Ⓑ White glass tube
  - Ⓒ Connector of the main unit
  - Ⓓ Connector of the grille
  - Ⓔ Band (Accessory)

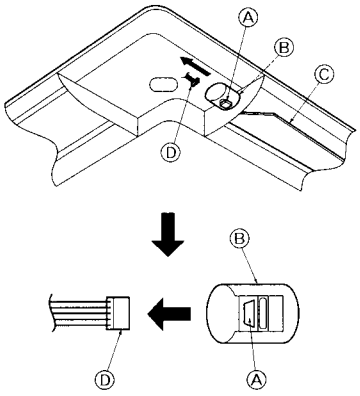

Fig. 8-9

8.4. Locking the up/down airflow direction (Fig. 8-9)

The vanes of the unit can be set and locked in up or down orientations depending upon the environment of use.

- Set according to the preference of the customer.
  The operation of the fixed up/down vanes and all automatic controls cannot be performed using the remote controller. In addition, the actual position of the vanes may differ from the position indicated on the remote controller.

① Turn off the main power switch.
Injuries and or an electrical shock may occur while the fan of the unit is rotating.

② Disconnect the connector for the vane motor of the vent that you want to lock. (While pressing the button, remove the connector in the direction indicated by the arrow as shown in the diagram.) After removing the connector, insulate it with tape.

③ To adjust the desired airflow direction, slowly move the auto vanes within the specified range. (Fig.8-10)

Specified range

Up/down airflow direction	level 30° (Min.)	Downward 45°	Downward 55°	Downward 70° (Max)
A (mm)	21	25	28	30

- The vanes can be set between 21 and 30 mm.

⚠ Caution:
Do not set the auto vanes passed the specified range. Condensation could form on and drop from the ceiling, or the unit could malfunction.

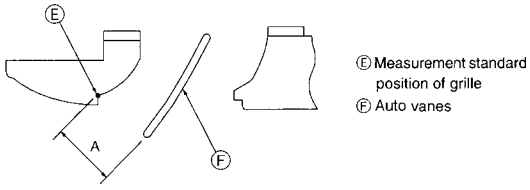

Fig. 8-10

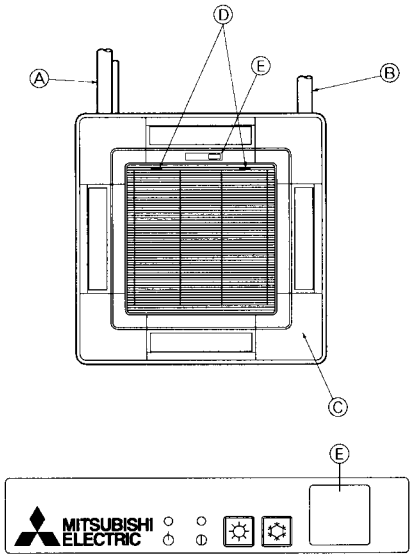

Fig. 8-11

8.5. Installing the intake grille (Fig. 8-11)

- Perform the procedure that is described in "8.2 Preparing to attach the grille" in reverse order to install the intake grille and the corner panel.
  - Ⓐ Refrigerant piping of the main unit
  - Ⓑ Drain piping of the main unit
  - Ⓒ Corner panel
    - * Installation in any position is possible.
  - Ⓓ Position of the levers on the intake grille when sent from the factory.
    - * Although the clips can be installed in any of four positions.
  - Ⓔ Receiver

8.6. Check

- Make sure that there is no gap between the unit and the grille, or between the grille and the surface of the ceiling. If there is any gap between the unit and the grille, or between the grille and the surface of the ceiling, it may cause dew to collect.
- Make sure that the wires have been securely connected.

9. Installing the remote controller

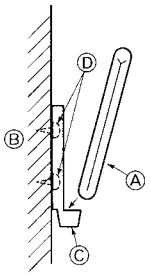

Fig. 9-1

9.1. Wireless remote controller (Fig. 9-1)

9.1.1. Installation area

- Area in which the remote controller is not exposed to direct sunshine.
- Area in which there is no nearby heating source.
- Area in which the remote controller is not exposed to cold (or hot) winds.
- Area in which the remote controller can be operated easily.
- Area in which the remote controller is beyond the reach of children.

9.1.2. Installation method

① Attach the remote controller holder to the desired location using two tapping screws.
② Place the lower end of the controller into the holder.

- The signal can travel up to approximately 7 meters (in a straight line) within 45 degrees to both right and left of the center line of the receiver.
  In addition, the signal may not be received if there is interference of light of fluorescent lights or strong sunlight.

10.Test run

10.1. Before test run

- ▶ **After installation of indoor and outdoor units, and piping and electric wiring work, re-check that the unit is free from leaks of refrigerant, loosened connections, and incorrect polarity.**
- ▶ **Measure an impedance between the power supply terminal block (L, N, ⏚) on the units and the ground with a 500 V Megger and check that it is equal to or greater than 1.0 MΩ.**

10.2. AUTO RESTART FUNCTION

Indoor controller board

This model is equipped with the AUTO RESTART FUNCTION.
When the indoor unit is controlled with the remote controller, the operation mode, set temperature, and the fan speed are memorized by the indoor controller board. The auto restart function sets to work the moment the power has restored after power failure, then, the unit will restart automatically.

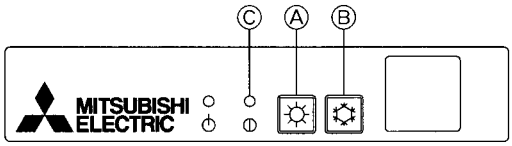

Ⓐ Emergency operation switch (heating)
Ⓑ Emergency operation switch (cooling)
Ⓒ Operation lamp

Fig. 10-1

10.3. Test run (Fig. 10-1)

Measure an impedance between the power supply terminal block on the outdoor unit and the ground with a 500 V Megger and check that it is equal to or greater than 1.0 MΩ.

- Before performing the test run, recheck for any wrong wiring.
  Wrong wiring prevents normal operation or results in blown fuse disabling operation.
- The test run can be started by pressing emergency operation switch (cooling/heating). When the emergency operation switch is once pressed, the unit will start the test run (continuous operation) for 30 minutes.
  A thermostat does not work during this time. After 30 minutes the unit will start the emergency operation at a fixed temperature setting of 24°C in cooling mode or heating mode.
- Perform test run in the following procedure.

Procedure

① Press the button Ⓑ to start the cooling operation.

If the operation lamp Ⓒ blinks every 0.5 seconds, inspect the indoor/outdoor connecting wire for mis-wiring.

- Check that the vanes operate properly when cool air is blown out.

② Press it once more, and the operation stops.
③ Press the button Ⓐ to start the heating operation.
Check that warm air blows out.

- In starting the heating operation, indoor unit fan may not operate to prevent blowing cool air. Please wait for a few minutes until the temperature of heat exchanger rises and warm air blows out.

④ Press it once more, and the operation stops.

Checking the remote (infrared) signal reception

Press the ON/OFF button on the remote controller and check that an electronic sound is heard from the indoor unit. Press the ON/OFF button again to turn the air conditioner off.

If the indoor unit is operated with the remote controller, both the test run and the emergency operation are released by commands from the remote controller.
Once the compressor stops, the restart preventive device operates so the compressor will not operate for three minutes to protect the air conditioner.

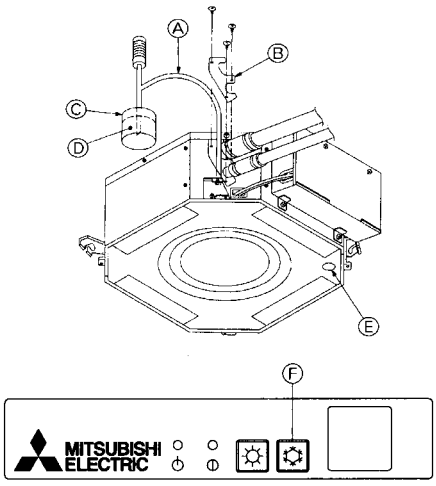

Fig. 10-2

10.4. Check drainage (Fig. 10-2)

- During the test run, ensure the water is being properly drained out and that no water is leaking from joints.
- Always check this during installation even if the unit is not required to provide cooling/drying at that time.
- Similarly, check the drainage before finishing ceiling installation in a new premises.

(1) Remove the cover of the water supply inlet and add about 1000 cc of water using a water supply pump etc. During this process, be careful not to spray water into the drain pump mechanism.
(2) Switching on emergency operation switch (cooling) on the grille.
(3) Confirm that water is being drained out through the drainage outlet.
(4) After checking the drainage, ensure that the cover is replaced and the power supply is isolated.
(5) After confirming the drainage system is functioning, replace the drain plug.

Ⓐ Insert the pump end 3 to 5 cm
Ⓑ Cover of water supply inlet
Ⓒ About 1000 cc
Ⓓ Water
Ⓔ Drain plug
Ⓕ Emergency operation switch (cooling)

11.Maintenance

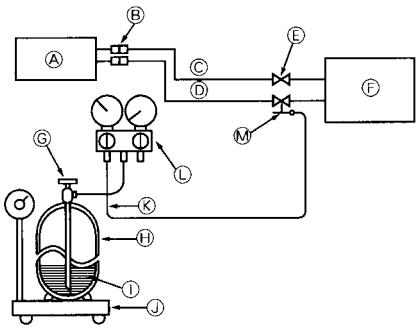

Ⓐ Indoor unit
Ⓑ Union
Ⓒ Liquid pipe
Ⓓ Gas pipe
Ⓔ Stop valve
Ⓕ Outdoor unit
Ⓖ Refrigerant gas cylinder operating valve
Ⓗ Refrigerant gas cylinder for R410A with siphon
Ⓘ Refrigerant (liquid)
Ⓙ Electronic scale for refrigerant charging
Ⓚ Charge hose (for R410A)
Ⓛ Gauge manifold valve (for R410A)
Ⓜ Service port

Fig. 11-1

11.1. Gas charge (Fig. 11-1)

1. **Connect gas cylinder to the service port of stop valve (3-way).**
2. **Execute air purge of the pipe (or hose) coming from refrigerant gas cylinder.**
3. **Replenish specified amount of refrigerant, while running the air conditioner for cooling.**

Note:
In case of adding refrigerant, comply with the quantity specified for the refrigerating cycle.

⚠ **Caution:**
- **Do not discharge the refrigerant into the atmosphere.**
  Take care not to discharge refrigerant into the atmosphere during installation, reinstallation, or repairs to the refrigerant circuit.
- **For additional charging, charge the refrigerant from liquid phase of the gas cylinder.**
  If the refrigerant is charged from the gas phase, composition change may occur in the refrigerant inside the cylinder and the outdoor unit. In this case, ability of the refrigerating cycle decreases or normal operation can be impossible. However, charging the liquid refrigerant all at once may cause the compressor to be locked. Thus, charge the refrigerant slowly.

To maintain the high pressure of the gas cylinder, warm the gas cylinder with warm water (under 40°C) during cold season. But never use naked fire or steam.

B.1.13 SAFETY DEVICE SETTINGS

SLZ-A09AR
SLZ-A12AR
SLZ-A18AR

Model / Safety device	SLZ-A09AR	SLZ-A12AR	SLZ-A18AR
Indoor fan motor thermal fuse	OFF 145±2℃		