Back to Index page

A.3 CEILING-SUSPENDED (PCA)

A.3.1 FEATURES A-104
A.3.2 SPECIFICATIONS A-105
A.3.3 OUTLINES AND DIMENSIONS A-108
A.3.4 WIRING DIAGRAM A-112
A.3.5 REFRIGERANT SYSTEM DIAGRAM A-113
A.3.6 PERFORMANCE DATA A-114
A.3.6.1 PERFORMANCE DATA A-114
A.3.6.2 PERFORMANCE CURVES A-126
A.3.7 NOISE CRITERIA CURVES A-127
A.3.8 OUTLET AIR SPEED AND COVERAGE RANGE A-129
A.3.9 TEMPERATURE AND AIR FLOW DISTRIBUTIONS A-130
A.3.10 REMOTE CONTROLLER A-131
A.3.11 TROUBLESHOOTING A-133
A.3.12 INSTALLATION PROCEDURE A-134
A.3.13 SAFETY DEVICE SETTINGS A-142

A.3.1 FEATURES

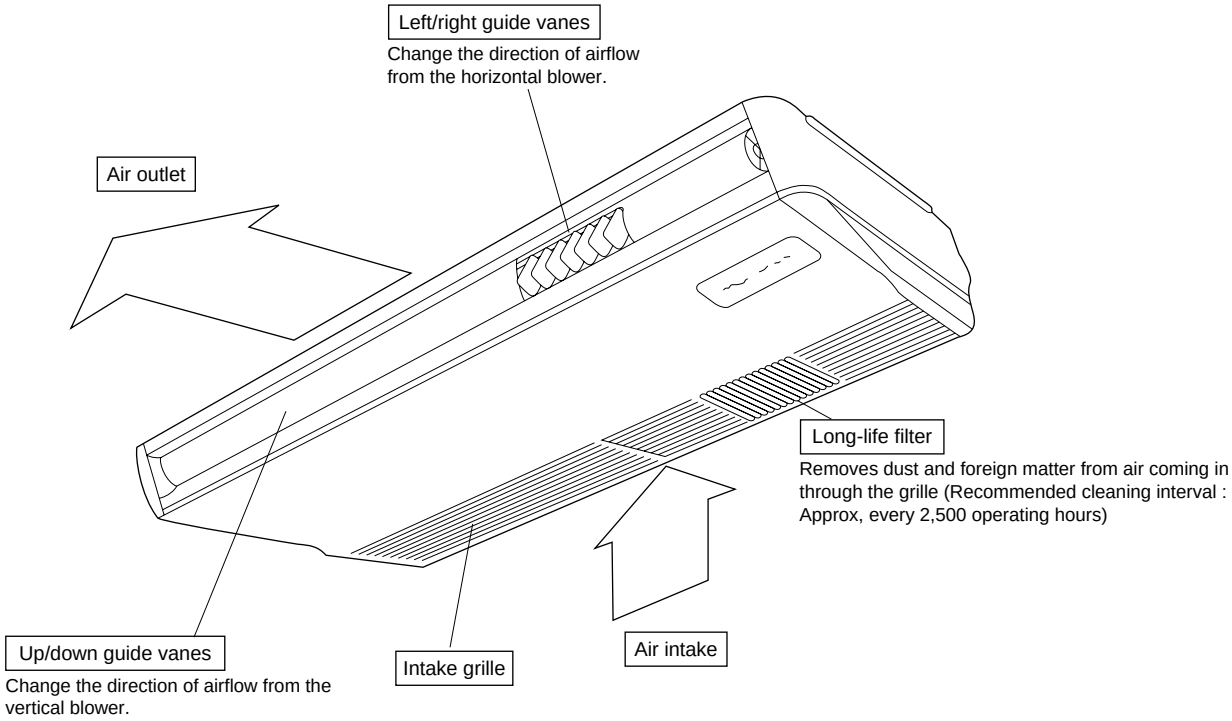

Designed for ultra-quiet operation and easy maintenance, the PC series provides exceptional air conditioning.

1 Extra Slim, Extra Stylish

Sleek and slim with stylishly curved lines, the PCA-PGA series blends right into any interior.
It also features a single air outlet which allows the auto vane to act as a shutter when the unit is turned off.

2 Auto Vane Distributes Air Evenly

The auto vane swings up and down automatically to distribute air more evenly to every corner of the room.

3 Keeps Airflow at Optimum Level According to Ceiling Height

The most suitable airflow can be selected for ceilings up to 3.5m high, enhancing air conditioning efficiency and comfort.

	Standard	High ceiling
Ceiling height	2.7m	3.5m

4 Greatly Simplified Installation

The new direct suspension system eliminates the task of removing the attachment fixture from the main unit, greatly shortening installation time.

Direct suspension with attachment fixture attached

1.Attach the washer and nuts to the suspension bolts.
2.Suspend the main units to the suspension bolts.
3.Secure the nuts.

5 Drain Piping Can be Connected in One of Two Directions, to the Left or the Right of the Unit.

A.3.2 SPECIFICATIONS

Item / Service Ref.				PCA-RP2GA	
Function				Cooling	Heating
Capacity			Btu/h	16,000	18,800
			W	4,700(2,300~5,400)	5,500(2,500~6,600)
Total input			kW	1.67	1.71
INDOOR UNIT	**Service Ref.**			**PCA-RP2GA**	
	Power supply(phase, cycle, voltage)			Single phase, 50Hz, 220-230-240V	
		Input	kW	0.09	0.09
		Running current	A	0.41	0.41
		Starting current	A	1.20	1.20
	External finish			Munsell 0.70Y 8.59/0.97	
	Heat exchanger			Plate fin coil	
	Fan	Fan(drive) x No.		Sirocco fan (direct) x 2	
		Fan motor output	kW	0.054	
		Airflow(Lo-Mi2-Mi1-Hi)	m³/min(CFM)	10-11-12-13(355-390-425-460)	
		External static pressure	Pa(mmAq)	0(direct blow)	
	Operation control & Thermostat			Remote controller & built-in	
	Noise level(Lo-Mi2-Mi1-Hi)		dB	37-38-40-42	
	Unit drain pipe O.D.		mm(in.)	26(1)	
	Dimensions	W	mm(in.)	1,000(39-3/8)	
		D	mm(in.)	680(26-3/4)	
		H	mm(in.)	210(8-1/4)	
	Weight		kg(lbs)	27(60)	
OUTDOOR UNIT	**Service Ref.**			**PUHZ-RP2VHA**	

Item / Service Ref.				PCA-RP2.5GA	
Function				Cooling	Heating
Capacity			Btu/h	20,500	23,900
			W	6,000(2,700~6,700)	7,000(2,800~8,200)
Total input			kW	1.63	2.03
INDOOR UNIT	**Service Ref.**			**PCA-RP2.5GA**	
	Power supply(phase, cycle, voltage)			Single phase, 50Hz, 220-230-240V	
		Input	kW	0.12	0.12
		Running current	A	0.53	0.53
		Starting current	A	1.27	1.27
	External finish			Munsell 0.70Y 8.59/0.97	
	Heat exchanger			Plate fin coil	
	Fan	Fan(drive) x No.		Sirocco fan (direct) x 3	
		Fan motor output	kW	0.070	
		Airflow(Lo-Mi2-Mi1-Hi)	m³/min(CFM)	14-15-16-18(495-530-565-635)	
		External static pressure	Pa(mmAq)	0(direct blow)	
	Operation control & Thermostat			Remote controller & built-in	
	Noise level(Lo-Mi2-Mi1-Hi)		dB	37-39-41-43	
	Unit drain pipe O.D.		mm(in.)	26(1)	
	Dimensions	W	mm(in.)	1,310(51-9/16)	
		D	mm(in.)	680(26-3/4)	
		H	mm(in.)	210(8-1/4)	
	Weight		kg(lbs)	34(75)	
OUTDOOR UNIT	**Service Ref.**			**PUHZ-RP2.5VHA**	

Notes1. Rating Conditions (ISO T1)
Cooling : Indoor : D.B. 27˚C(80˚F), W.B. 19˚C (66˚F) Outdoor : D.B. 35˚C(95˚F), W.B. 24˚C (75˚F)
Heating : Indoor : D.B. 20˚C(68˚F) Outdoor : D.B. 7˚C(45˚F), W.B. 6˚C (43˚F)
Refrigerant piping length (one way) : 5m (16ft)

2. Guaranteed operating range

		Indoor	Outdoor
Cooling	Upper limit	D.B. 35˚C, W.B. 22.5˚C	D.B. 46˚C
	Lower limit	D.B. 19˚C, W.B. 15˚C	D.B. -5˚C
Heating	Upper limit	D.B. 28˚C	D.B. 21˚C, W.B. 15˚C
	Lower limit	D.B. 17˚C	D.B. -11˚C, W.B. -12˚C

3. Guaranteed voltage
198~264V, 50Hz

4. Above data based on indicated voltage
Indoor Unit Single phase 230V 50Hz
Outdoor Unit Single phase 230V 50Hz

5. Refer to the data book of outdoor unit for the outdoor unit's specifications.

Item / Service Ref.				PCA-RP3GA	
Function				Cooling	Heating
Capacity			Btu/h	24,200	27,300
			W	7,100(3,300~8,100)	8,000(3,500~10,200)
Total input			kW	2.14	2.43
INDOOR UNIT	**Service Ref.**			**PCA-RP3GA**	
	Power supply(phase, cycle, voltage)			Single phase, 50Hz, 220-230-240V	
		Input	kW	0.12	0.12
		Running current	A	0.53	0.53
		Starting current	A	1.27	1.27
	External finish			Munsell 0.70Y 8.59/0.97	
	Heat exchanger			Plate fin coil	
	Fan	Fan(drive) x No.		Sirocco fan (direct) x 3	
		Fan motor output	kW	0.070	
		Airflow(Lo-Mi2-Mi1-Hi)	m³/min(CFM)	14-15-16-18(495-530-565-635)	
		External static pressure	Pa(mmAq)	0(direct blow)	
	Operation control & Thermostat			Remote controller & built-in	
	Noise level(Lo-Mi2-Mi1-Hi)		dB	37-39-41-43	
	Unit drain pipe O.D.		mm(in.)	26(1)	
	Dimensions	W	mm(in.)	1,310(51-9/16)	
		D	mm(in.)	680(26-3/4)	
		H	mm(in.)	210(8-1/4)	
	Weight		kg(lbs)	34(75)	
OUTDOOR UNIT	**Service Ref.**			**PUHZ-RP3VHA**	

Item / Service Ref.				PCA-RP4GA	
Function				Cooling	Heating
Capacity			Btu/h	34,100	27,300
	PUHZ-RP4VHA		W	10,000(4,900~11,400)	11,200(4,500~14,000)
Total input			kW	2.92	3.26
INDOOR UNIT	**Service Ref.**			**PCA-RP4GA**	
	Power supply(phase, cycle, voltage)			Single phase, 50Hz, 220-230-240V	
		Input	kW	0.15	0.15
		Running current	A	0.69	0.69
		Starting current	A	1.48	1.48
	External finish			Munsell 0.70Y 8.59/0.97	
	Heat exchanger			Plate fin coil	
	Fan	Fan(drive) x No.		Sirocco fan (direct) x 3	
		Fan motor output	kW	0.090	
		Airflow(Lo-Mi2-Mi1-Hi)	m³/min(CFM)	20-21-23-25(705-740-810-885)	
		External static pressure	Pa(mmAq)	0(direct blow)	
	Operation control & Thermostat			Remote controller & built-in	
	Noise level(Lo-Mi2-Mi1-Hi)		dB	40-41-43-45	
	Unit drain pipe O.D.		mm(in.)	26(1)	
	Dimensions	W	mm(in.)	1,310(51-9/16)	
		D	mm(in.)	680(26-3/4)	
		H	mm(in.)	270(10-5/8)	
	Weight		kg(lbs)	37(82)	
OUTDOOR UNIT	**Service Ref.**			**PUHZ-RP4VHA**	

Notes1. Rating Conditions (ISO T1)
Cooling : Indoor : D.B. 27˚C(80˚F), W.B. 19˚C (66˚F) Outdoor : D.B. 35˚C(95˚F), W.B. 24˚C (75˚F)
Heating : Indoor : D.B. 20˚C(68˚F) Outdoor : D.B. 7˚C(45˚F), W.B. 6˚C (43˚F)
Refrigerant piping length (one way) : 5m (16ft)

2. Guaranteed operating range

		Indoor	Outdoor
Cooling	Upper limit	D.B. 35˚C, W.B. 22.5˚C	D.B. 46˚C
	Lower limit	D.B. 19˚C, W.B. 15˚C	D.B. -5˚C
Heating	Upper limit	D.B. 28˚C	D.B. 21˚C, W.B. 15˚C
	Lower limit	D.B. 17˚C	D.B. -11˚C, W.B. -12˚C

3. Guaranteed voltage
198~264V, 50Hz

4. Above data based on indicated voltage
Indoor Unit Single phase 230V 50Hz
Outdoor Unit Single phase 230V 50Hz

5. Refer to the data book of outdoor unit for the outdoor unit's specifications.

Item / Service Ref.				PCA-RP5GA	
Function				Cooling	Heating
Capacity			Btu/h	42,700	47,800
		PUHZ-RP5VHA	W	12,500(5,500~14,000)	14,000(5,000~16,000)
Total input			kW	3.89	4.34
INDOOR UNIT	**Service Ref.**			**PCA-RP5GA**	
	Power supply(phase, cycle, voltage)			Single phase, 50Hz, 220-230-240V	
		Input	kW	0.22	0.22
		Running current	A	1.01	1.01
		Starting current	A	2.20	2.20
	External finish			Munsell 0.70Y 8.59/0.97	
	Heat exchanger			Plate fin coil	
	Fan	Fan(drive) x No.		Sirocco fan (direct) x 4	
		Fan motor output	kW	0.150	
		Airflow(Lo-Mi2-Mi1-Hi)	m³/min(CFM)	27-30-32-34(955-1,060-1,130-1,200)	
		External static pressure	Pa(mmAq)	0(direct blow)	
	Operation control & Thermostat			Remote controller & built-in	
	Noise level(Lo-Mi2-Mi1-Hi)		dB	41-43-45-46	
	Unit drain pipe O.D.		mm(in.)	26(1)	
	Dimensions	W	mm(in.)	1,620(63-3/4)	
		D	mm(in.)	680(26-3/4)	
		H	mm(in.)	270(10-5/8)	
	Weight		kg(lbs)	43(95)	
OUTDOOR UNIT	**Service Ref.**			**PUHZ-RP5VHA**	

Item / Service Ref.				PCA-RP6GA	
Function				Cooling	Heating
Capacity			Btu/h	47,800	54,600
		PUHZ-RP6VHA	W	14,000(5,500~15,300)	16,000(5,000~18,000)
Total input			kW	4.96	4.60
INDOOR UNIT	**Service Ref.**			**PCA-RP6GA**	
	Power supply(phase, cycle, voltage)			Single phase, 50Hz, 220-230-240V	
		Input	kW	0.22	0.22
		Running current	A	1.01	1.01
		Starting current	A	2.20	2.20
	External finish			Munsell 0.70Y 8.59/0.97	
	Heat exchanger			Plate fin coil	
	Fan	Fan(drive) x No.		Sirocco fan (direct) x 4	
		Fan motor output	kW	0.150	
		Airflow(Lo-Mi2-Mi1-Hi)	m³/min(CFM)	27-30-32-34(955-1,060-1,130-1,200)	
		External static pressure	Pa(mmAq)	0(direct blow)	
	Operation control & Thermostat			Remote controller & built-in	
	Noise level(Lo-Mi2-Mi1-Hi)		dB	42-44-46-48	
	Unit drain pipe O.D.		mm(in.)	26(1)	
	Dimensions	W	mm(in.)	1,620(63-3/4)	
		D	mm(in.)	680(26-3/4)	
		H	mm(in.)	270(10-5/8)	
	Weight		kg(lbs)	45(99)	
OUTDOOR UNIT	**Service Ref.**			**PUHZ-RP6VHA**	

Notes1. Rating Conditions (ISO T1)
Cooling : Indoor : D.B. 27˚C(80˚F), W.B. 19˚C (66˚F) Outdoor : D.B. 35˚C(95˚F), W.B. 24˚C (75˚F)
Heating : Indoor : D.B. 20˚C(68˚F) Outdoor : D.B. 7˚C(45˚F), W.B. 6˚C (43˚F)
Refrigerant piping length (one way) : 5m (16ft)

2. Guaranteed operating range

		Indoor	Outdoor
Cooling	Upper limit	D.B. 35˚C, W.B. 22.5˚C	D.B. 46˚C
	Lower limit	D.B. 19˚C, W.B. 15˚C	D.B. -5˚C
Heating	Upper limit	D.B. 28˚C	D.B. 21˚C, W.B. 15˚C
	Lower limit	D.B. 17˚C	D.B. -11˚C, W.B. -12˚C

3. Guaranteed voltage
198~264V, 50Hz

4. Above data based on indicated voltage
Indoor Unit Single phase 230V 50Hz
Outdoor Unit Single phase 230V 50Hz

5. Refer to the data book of outdoor unit for the outdoor unit's specifications.

A.3.3 OUTLINES AND DIMENSIONS

INDOOR UNIT
PCA-RP2GA

Unit : mm

NOTES:
1. Use M10 or W3/8 screws for anchor bolt.
2. Please be sure when installing the drain-up machine (option parts). Refrigerant pipe will be only upper drain pipe arrangement.

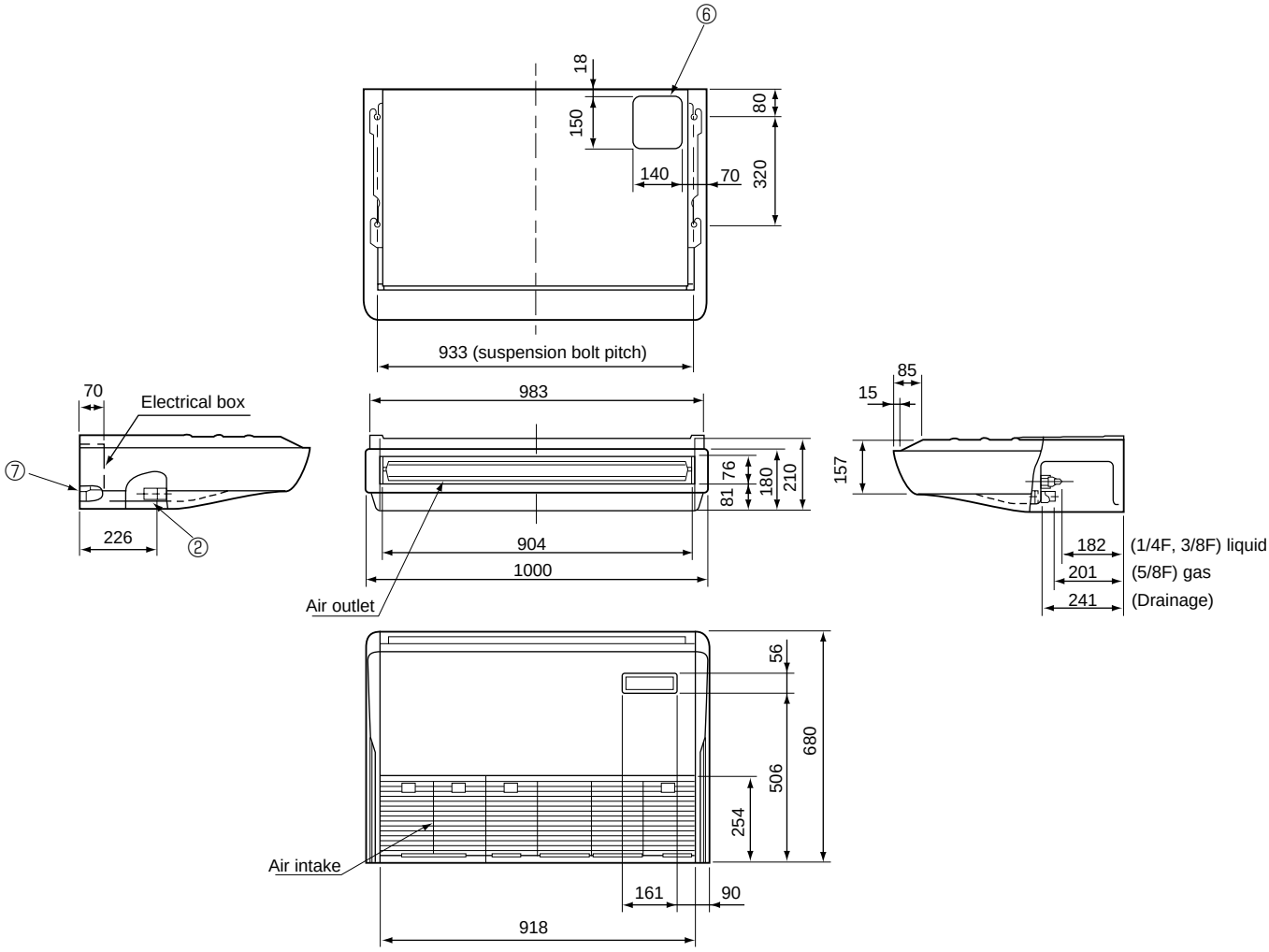

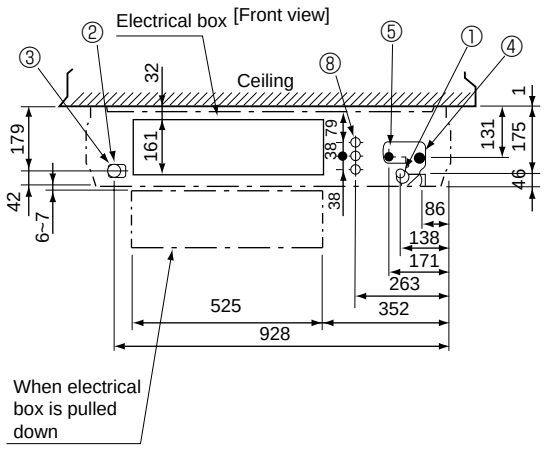

① Drainage pipe connection (26mm I.D.)
② Drainage pipe connection (for the left arrangement)
③ Knock out hole for left drain-piping arrangement
④ Refrigerant-pipe connection (gas pipe side/flared connection)
⑤ Refrigerant-pipe connection (liquid pipe side/flared connection)
⑥ Knock out hole for upper drain pipe arrangement
⑦ Knock out hole for left drain pipe arrangement
⑧ Knock out hole for wiring arrangement

PCA-RP2.5GA
PCA-RP3GA

Unit : mm

NOTES:
1. Use M10 or W3/8 screws for anchor bolt.
2. Please be sure when installing the drain-up machine (option parts). Refrigerant pipe will be only upper drain pipe arrangement.

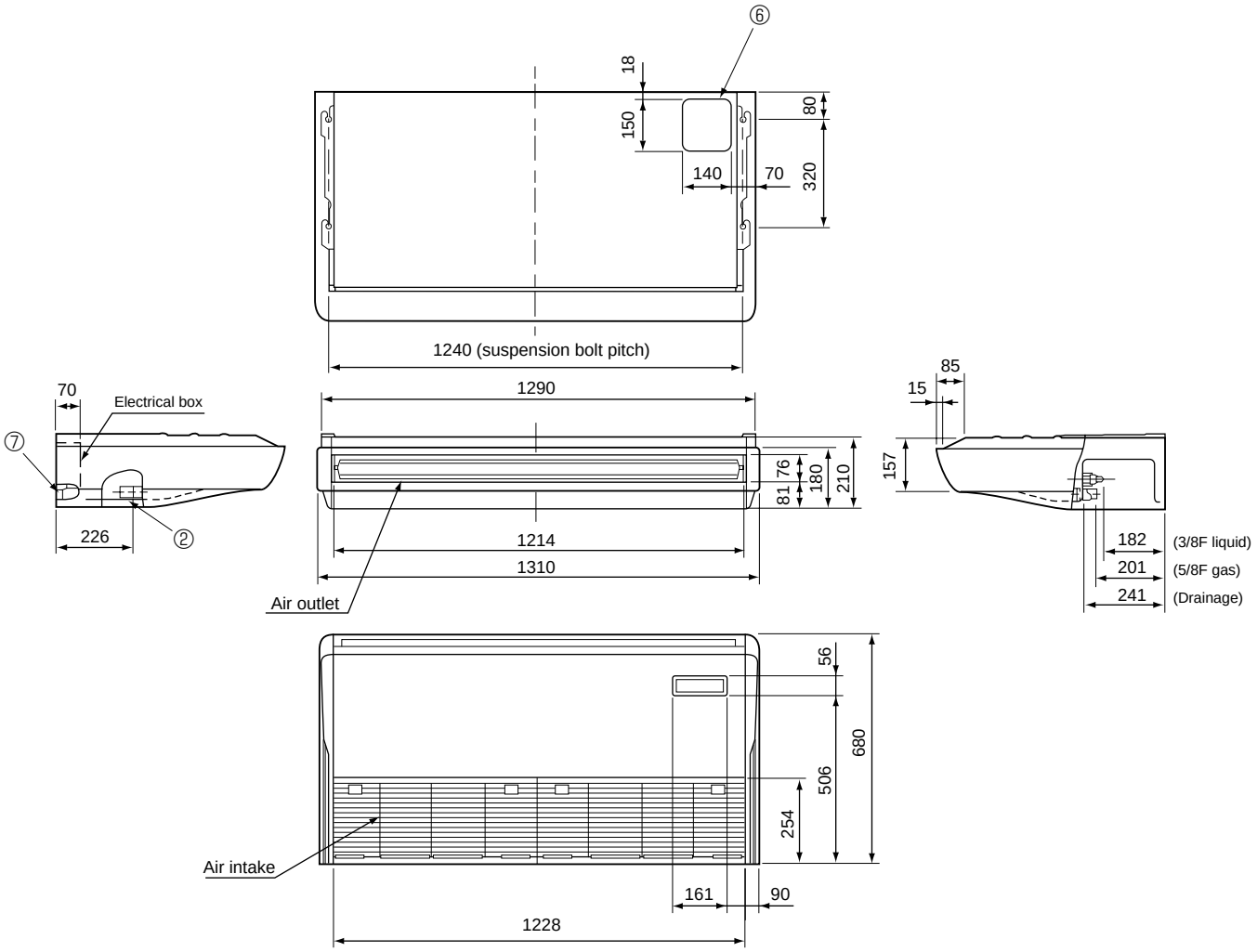

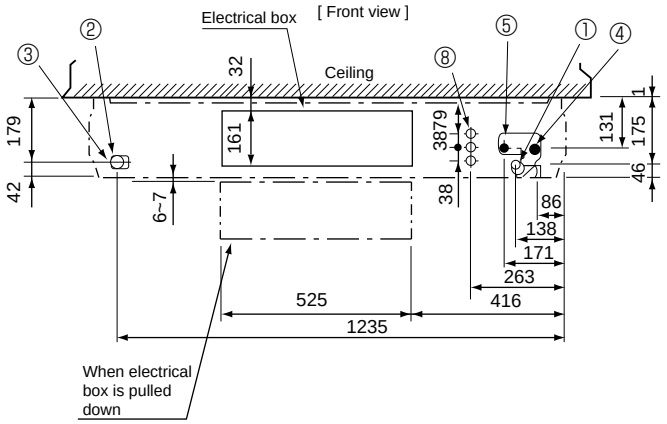

① Drainage pipe connection (26mm I.D.)
② Drainage pipe connection (for the left arrangement)
③ Knock out hole for left drain-piping arrangement
④ Refrigerant-pipe connection (gas pipe side/flared connection)
⑤ Refrigerant-pipe connection (liquid pipe side/flared connection)
⑥ Knock out hole for upper drain pipe arrangement
⑦ Knock out hole for left drain pipe arrangement
⑧ Knock out hole for wiring arrangement

PCA-RP4GA

Unit : mm

NOTES:
1. Use M10 or W3/8 screws for anchor bolt.
2. Please be sure when installing the drain-up machine (option parts). Refrigerant pipe will be only upper drain pipe arrangement.

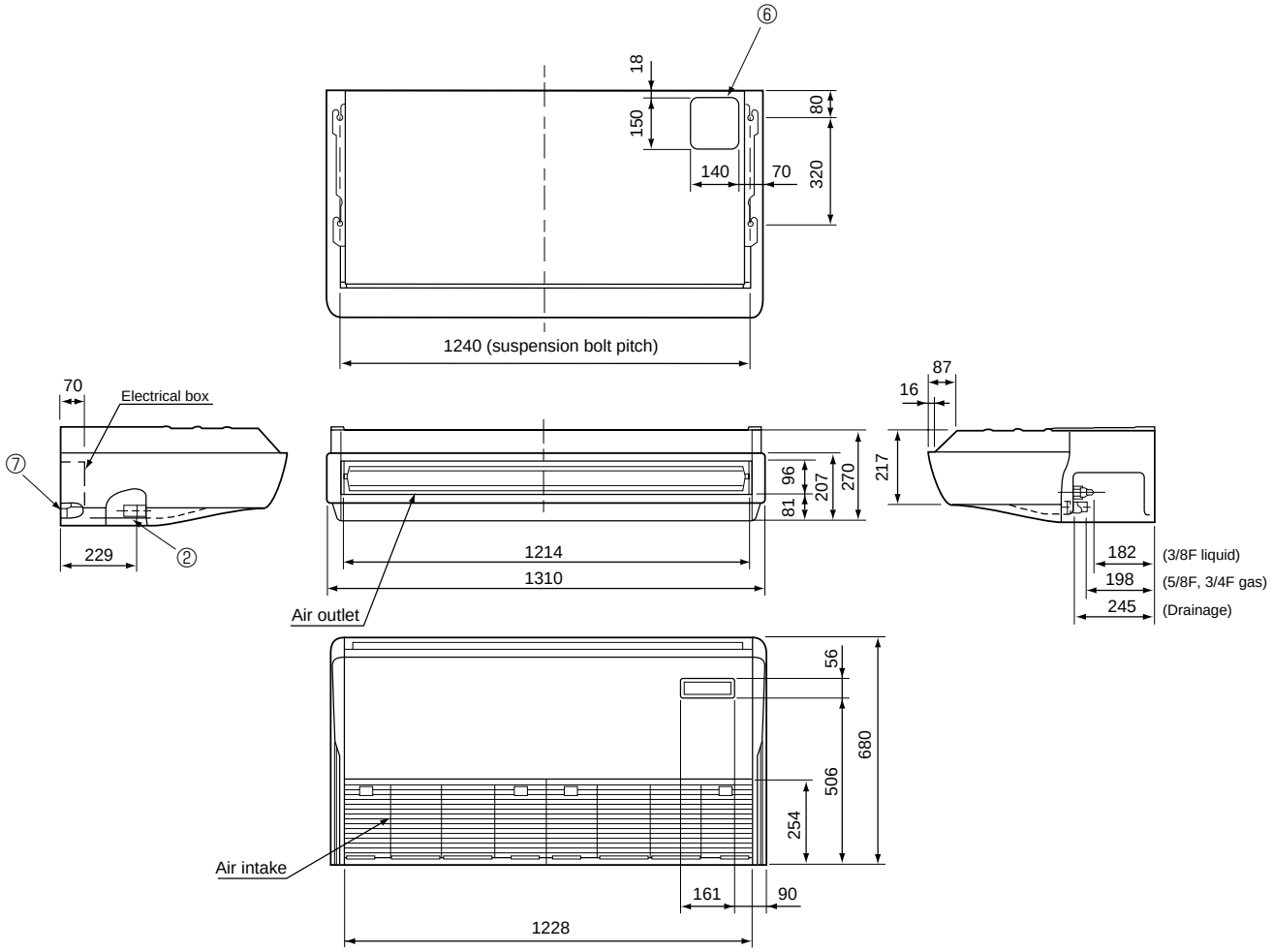

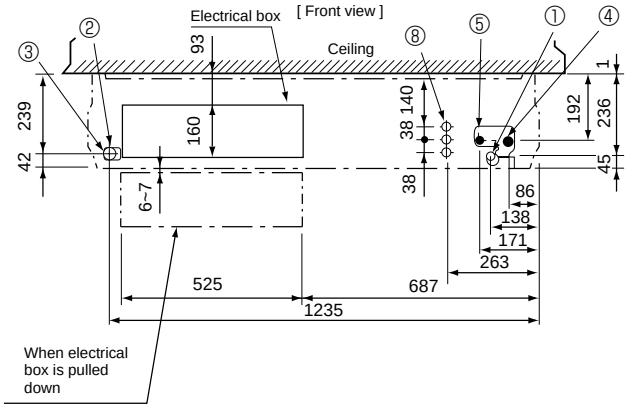

① Drainage pipe connection (26mm I.D.)
② Drainage pipe connection (for the left arrangement)
③ Knock out hole for left drain-piping arrangement
④ Refrigerant-pipe connection (gas pipe side/flared connection)
⑤ Refrigerant-pipe connection (liquid pipe side/flared connection)
⑥ Knock out hole for upper drain pipe arrangement
⑦ Knock out hole for left drain pipe arrangement
⑧ Knock out hole for wiring arrangement

PCA-RP5GA
PCA-RP6GA

Unit : mm

NOTES:
1. Use M10 or W3/8 screws for anchor bolt.
2. Please be sure when installing the drain-up machine (option parts). Refrigerant pipe will be only upper drain pipe arrangement.

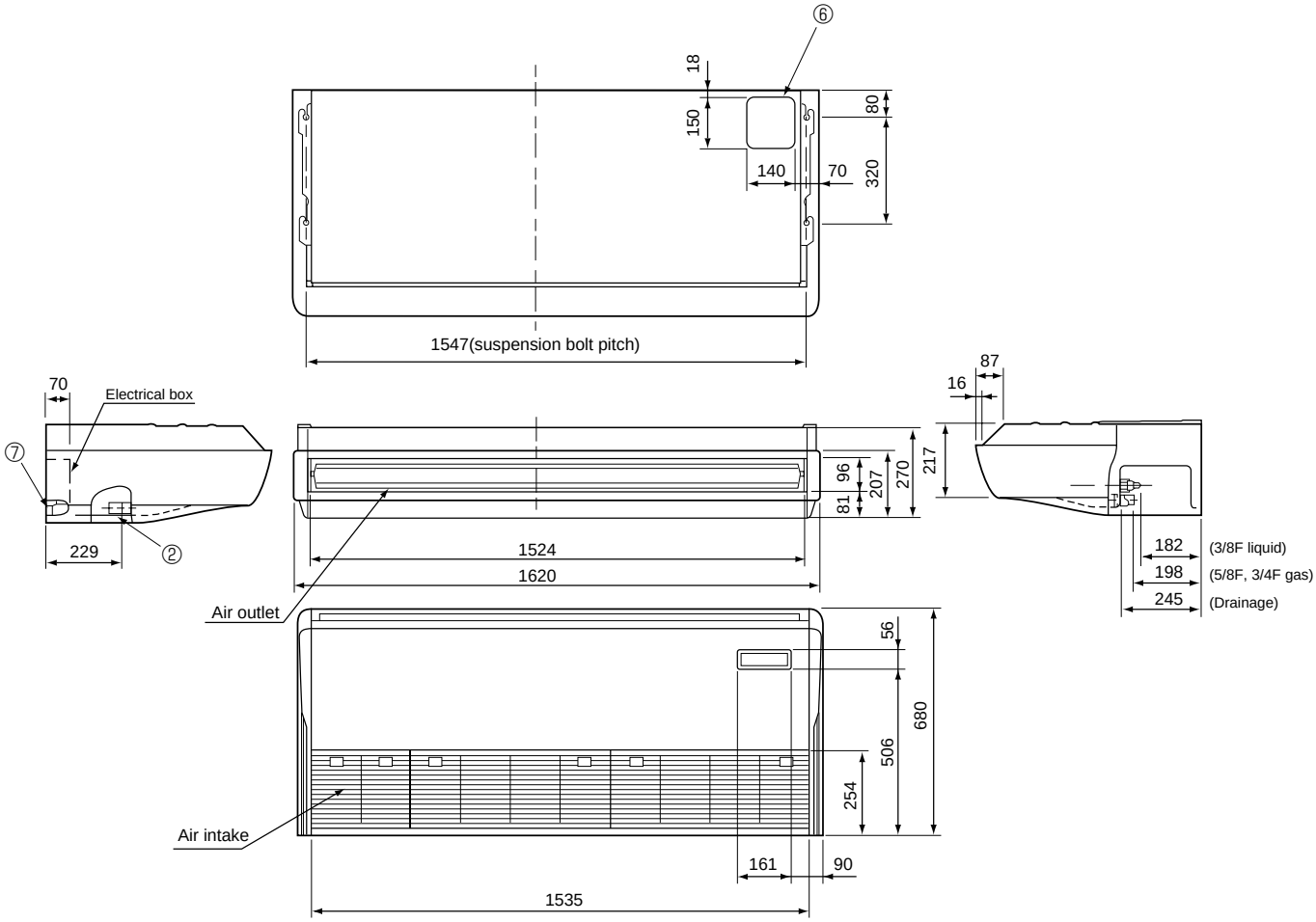

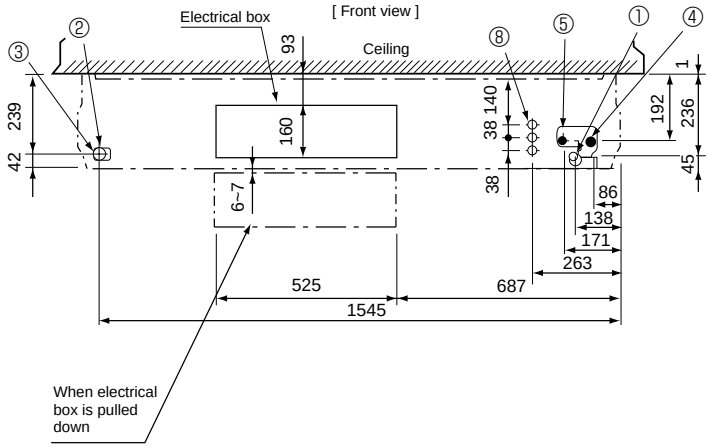

① Drainage pipe connection (26mm I.D.)
② Drainage pipe connection (for the left arrangement)
③ Knock out hole for left drain-piping arrangement
④ Refrigerant-pipe connection (gas pipe side/flared connection)
⑤ Refrigerant-pipe connection (liquid pipe side/flared connection)
⑥ Knock out hole for upper drain pipe arrangement
⑦ Knock out hole for left drain pipe arrangement
⑧ Knock out hole for wiring arrangement

A.3.4 WIRING DIAGRAM

PCA-RP2GA PCA-RP2.5GA PCA-RP3GA
PCA-RP4GA PCA-RP5GA PCA-RP6GA

SYMBOL	NAME
P.B	INDOOR POWER BOARD
F1	FUSE(4A)
ZNR	VARISTOR
I.B	INDOOR CONTROLLER BOARD
CN2L	CONNECTOR(LOSSNAY)
CN32	CONNECTOR(REMOTE SWITCH)
CN41	CONNECTOR(HA TERMINAL-A)
SW1	JUMPER WIRE(MODEL SELECTION)
SW2	JUMPER WIRE(CAPACITY CORD)
SWE	SWITCH(EMERGENCY OPERATION)
X1	RELAY(DRAIN PUMP)
X4	RELAY(FAN MOTOR)
FC	FAN PHASE CONTROL
LED1	POWER SUPPLY(I.B)
LED2	POWER SUPPLY(R.B)
LED3	TRANSMISSION(INDOOR-OUTDOOR)
C	CAPACITOR(FAN MOTOR)
MF	FAN MOTOR

SYMBOL	NAME
MV	VANE MOTOR
DP	DRAIN-UP MACHINE(OPTION)
DS	DRAIN SENSOR(OPTION)
TB4	TERMINAL BLOCK(INDOOR/OUTDOOR CONNECTING LINE)
TB5	TERMINAL BLOCK(REMOTE CONTROLLER TRANSMISSION LINE)
TH1	ROOM TEMP.THERMISTOR (0℃/15kΩ,25℃/5.4kΩ DETECT)
TH2	PIPE TEMP.THERMISTOR/LIQUID (0℃/15kΩ,25℃/5.4kΩ DETECT)
TH5	COND./EVA.TEMP.THERMISTOR (0℃/15kΩ,25℃/5.4kΩ DETECT)
R.B	REMOTE CONTROLLER BOARD
CN2	CONNECTOR(SCHEDULE TIMER)
TB6	TERMINAL BLOCK(REMOTE CONTROLLER TRANSMISSION LINE)
TB2	TERMINAL BLOCK(HEATER)

SYMBOL	NAME
W.B	WIRELESS REMOTE CONTROLLER BOARD(OPTION)
RU	RECEIVING UNIT
BZ	BUZZER
LED1	LED(RUN INDICATOR)
LED2	LED(HOT ADJUST)
SW1	SWITCH(HEATING ON/OFF)
SW2	SWITCH(COOLING ON/OFF)

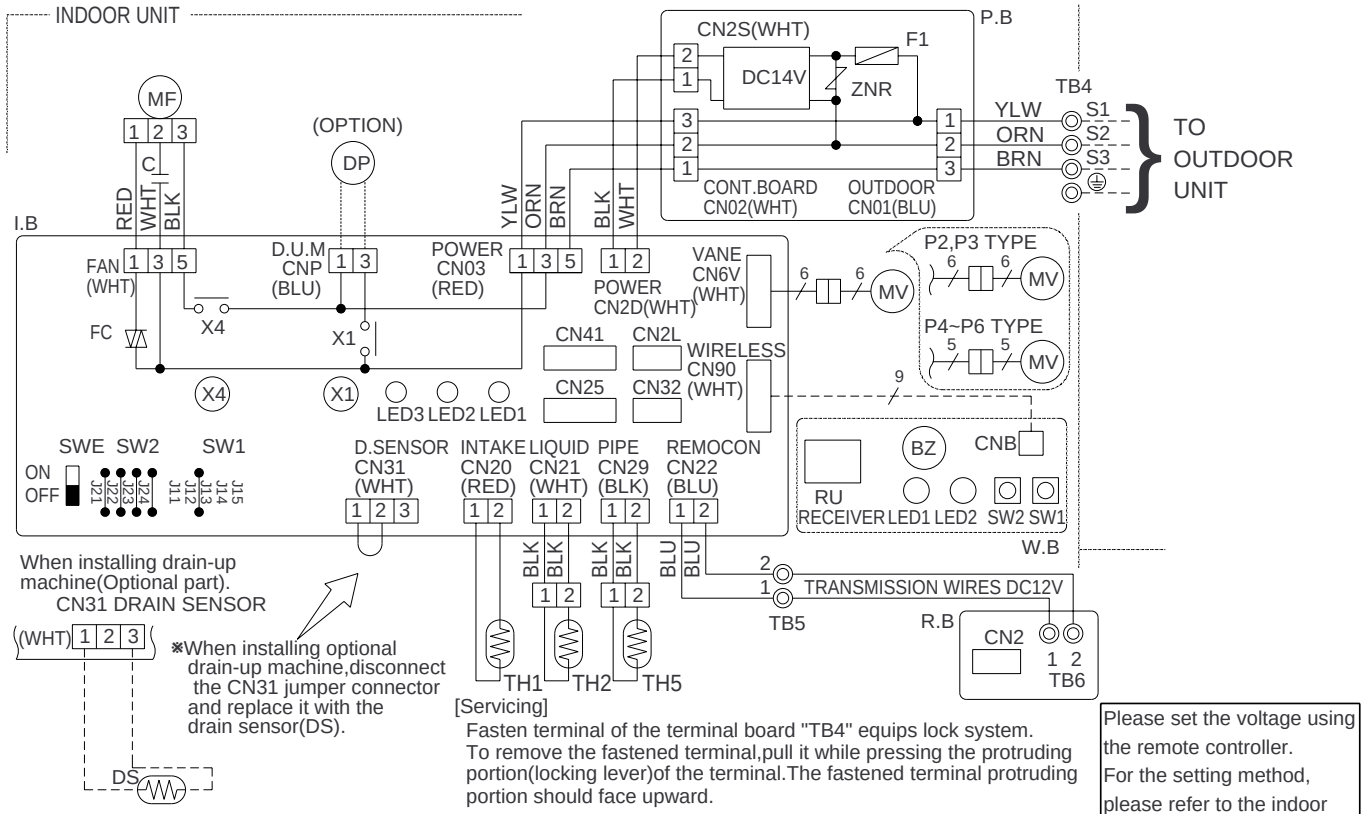

[Servicing]
Fasten terminal of the terminal board "TB4" equips lock system.
To remove the fastened terminal,pull it while pressing the protruding portion(locking lever)of the terminal.The fastened terminal protruding portion should face upward.

Please set the voltage using the remote controller.
For the setting method, please refer to the indoor unit Installation Manual.

MODELS	SW1	SW2 Manufacture	SW2 Service board
2GA	<For manufacture> J11 J12 J13 J14 J15 <For service board> 1 2 3 4 5 ON OFF	J21 J22 J23 J24	1 2 3 4 ON OFF
2.5GA		J21 J22 J23 J24	1 2 3 4 ON OFF
3GA		J21 J22 J23 J24	1 2 3 4 ON OFF
4GA		J21 J22 J23 J24	1 2 3 4 ON OFF
5GA		J21 J22 J23 J24	1 2 3 4 ON OFF
6GA		J21 J22 J23 J24	1 2 3 4 ON OFF

[Self-diagnosis]
1.For details on how to operate self-diagnosis with the wireless remote control, refer to the technical manuals etc.

NOTES:
1.Since the outdoor side electric wiring may change be sure to check the outdoor unit electric wiring for servicing.
2.Indoor and outdoor connecting wires are made with polarities, make wiring matching terminal numbers(S1,S2,S3).
3.Make sure that the main power supply of the booster heater is independent.
4.Symbols used in wiring diagram above are,
□□□ :Connector, ◎ : Terminal (block).

[Emergency operation procedure]
1.When the wired remote control or the indoor unit microcomputer has failed, but all other components work properly, if you set the switch(SWE) on the indoor control panel ON, the indoor unit will begin Emergency Operation.
When Emergency Operation is activated, the indoor unit operates as follows:
(1)Indoor fan is running at high speed.
(2)Drain-up machine(optional) is working.

A.3.5 REFRIGERANT SYSTEM DIAGRAM

PCA-RP2GA PCA-RP2.5GA PCA-RP3GA
PCA-RP4GA PCA-RP5GA PCA-RP6GA

Unit : mm

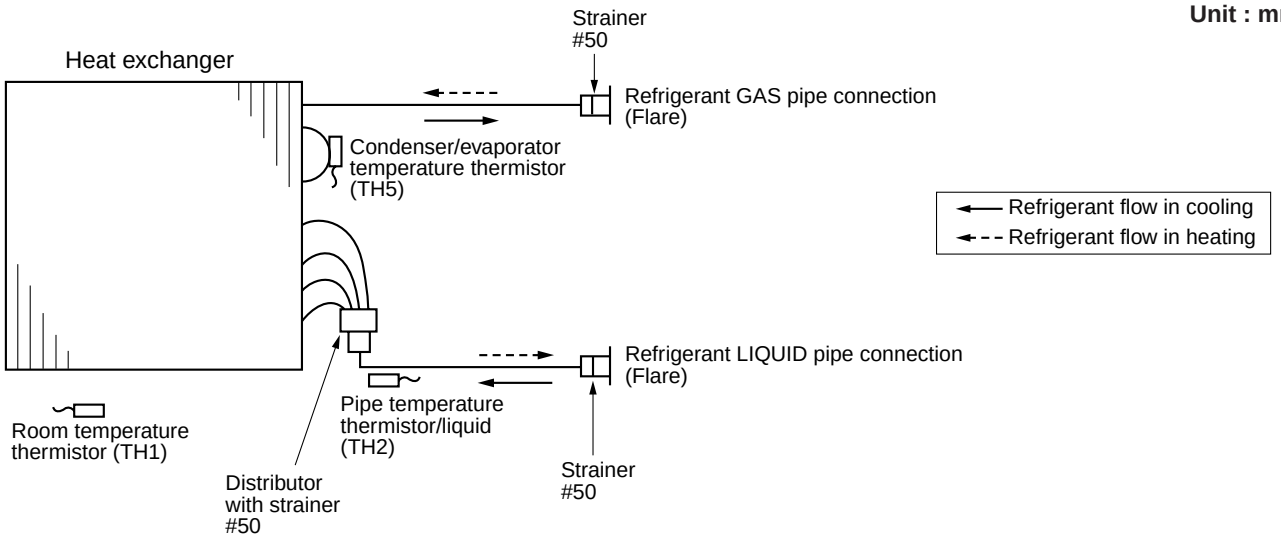

A.3.6 PERFORMANCE DATA

A.3.6.1 PERFORMANCE DATA

COOLING CAPACITY

PCA-RP2GA / PUHZ-RP2VHA

Indoor Intake air D.B.(°C)	Indoor Intake air W.B.(°C)	Outdoor intake air D.B.(°C)											
		20				25				30			
		CA	SHC(W)	SHF	P.C.	CA	SHC(W)	SHF	P.C.	CA	SHC(W)	SHF	P.C.
20	16	4653	3071	0.66	1.34	4512	2978	0.66	1.41	4371	2885	0.66	1.49
20	18	4982	2690	0.54	1.36	4841	2614	0.54	1.44	4677	2525	0.54	1.54
20	20	5358	2250	0.42	1.40	5241	2201	0.42	1.47	5100	2142	0.42	1.57
22	16	4653	3443	0.74	1.34	4512	3339	0.74	1.41	4371	3235	0.74	1.49
22	18	4982	3089	0.62	1.36	4841	3001	0.62	1.44	4677	2899	0.62	1.54
22	20	5358	2679	0.50	1.40	5241	2620	0.50	1.47	5100	2550	0.50	1.57
24	16	4653	3815	0.82	1.34	4512	3700	0.82	1.41	4371	3584	0.82	1.49
24	18	4982	3487	0.70	1.36	4841	3389	0.70	1.44	4677	3274	0.70	1.54
24	20	5358	3108	0.58	1.40	5241	3039	0.58	1.47	5100	2958	0.58	1.57
24	22	5711	2627	0.46	1.44	5593	2573	0.46	1.52	5452	2508	0.46	1.62
26	16	4653	4188	0.90	1.34	4512	4061	0.90	1.41	4371	3934	0.90	1.49
26	18	4982	3886	0.78	1.36	4841	3776	0.78	1.44	4677	3648	0.78	1.54
26	20	5358	3536	0.66	1.40	5241	3459	0.66	1.47	5100	3366	0.66	1.57
26	22	5711	3084	0.54	1.44	5593	3020	0.54	1.52	5452	2944	0.54	1.62
27	16	4653	4374	0.94	1.34	4512	4241	0.94	1.41	4371	4109	0.94	1.49
27	18	4982	4085	0.82	1.36	4841	3970	0.82	1.44	4677	3835	0.82	1.54
27	20	5358	3751	0.70	1.40	5241	3668	0.70	1.47	5100	3570	0.70	1.57
27	22	5711	3312	0.58	1.44	5593	3244	0.58	1.52	5452	3162	0.58	1.62
28	16	4653	4560	0.98	1.34	4512	4422	0.98	1.41	4371	4284	0.98	1.49
28	18	4982	4285	0.86	1.36	4841	4163	0.86	1.44	4677	4022	0.86	1.54
28	20	5358	3965	0.74	1.40	5241	3878	0.74	1.47	5100	3774	0.74	1.57
28	22	5711	3541	0.62	1.44	5593	3468	0.62	1.52	5452	3380	0.62	1.62
30	16	4653	4653	1.00	1.34	4512	4512	1.00	1.41	4371	4371	1.00	1.49
30	18	4982	4683	0.94	1.36	4841	4551	0.94	1.44	4677	4396	0.94	1.54
30	20	5358	4394	0.82	1.40	5241	4297	0.82	1.47	5100	4182	0.82	1.57
30	22	5711	3997	0.70	1.44	5593	3915	0.70	1.52	5452	3816	0.70	1.62
32	16	4653	4653	1.00	1.34	4512	4512	1.00	1.41	4371	4371	1.00	1.49
32	18	4982	4982	1.00	1.36	4841	4841	1.00	1.44	4677	4677	1.00	1.54
32	20	5358	4822	0.90	1.40	5241	4716	0.90	1.47	5100	4590	0.90	1.57
32	22	5711	4454	0.78	1.44	5593	4363	0.78	1.52	5452	4253	0.78	1.62
34	16	4653	4653	1.00	1.34	4512	4512	1.00	1.41	4371	4371	1.00	1.49
34	18	4982	4982	1.00	1.36	4841	4841	1.00	1.44	4677	4677	1.00	1.54
34	20	5358	5251	0.98	1.40	5241	5136	0.98	1.47	5100	4998	0.98	1.57
34	22	5711	4911	0.86	1.44	5593	4810	0.86	1.52	5452	4689	0.86	1.62

Notes CA : Capacity (W)
P.C. : Power consumption (kW)
SHC(W) : Sensible heat capacity
SHF : Sensible heat factor

COOLING CAPACITY
PCA-RP2GA / PUHZ-RP2VHA

Indoor Intake air D.B.(°C)	Indoor Intake air W.B.(°C)	Outdoor intake air D.B.(°C)											
		35				40				45			
		CA	SHC(W)	SHF	P.C.	CA	SHC(W)	SHF	P.C.	CA	SHC(W)	SHF	P.C.
20	16	4183	2761	0.66	1.60	3995	2637	0.66	1.72	3807	2513	0.66	1.86
20	18	4512	2436	0.54	1.64	4371	2360	0.54	1.77	4089	2208	0.54	1.90
20	20	4888	2053	0.42	1.69	4700	1974	0.42	1.80	4418	1856	0.42	1.94
22	16	4183	3095	0.74	1.60	3995	2956	0.74	1.72	3807	2817	0.74	1.86
22	18	4512	2797	0.62	1.64	4371	2710	0.62	1.77	4089	2535	0.62	1.90
22	20	4888	2444	0.50	1.69	4700	2350	0.50	1.80	4418	2209	0.50	1.94
24	16	4183	3430	0.82	1.60	3995	3276	0.82	1.72	3807	3122	0.82	1.86
24	18	4512	3158	0.70	1.64	4371	3060	0.70	1.77	4089	2862	0.70	1.90
24	20	4888	2835	0.58	1.69	4700	2726	0.58	1.80	4418	2562	0.58	1.94
24	22	5264	2421	0.46	1.72	5076	2335	0.46	1.85	4794	2205	0.46	1.97
26	16	4183	3765	0.90	1.60	3995	3596	0.90	1.72	3807	3426	0.90	1.86
26	18	4512	3519	0.78	1.64	4371	3409	0.78	1.77	4089	3189	0.78	1.90
26	20	4888	3226	0.66	1.69	4700	3102	0.66	1.80	4418	2916	0.66	1.94
26	22	5264	2843	0.54	1.72	5076	2741	0.54	1.85	4794	2589	0.54	1.97
27	16	4183	3932	0.94	1.60	3995	3755	0.94	1.72	3807	3579	0.94	1.86
27	18	4512	3700	0.82	1.64	4371	3584	0.82	1.77	4089	3353	0.82	1.90
27	20	4888	3422	0.70	1.69	4700	3290	0.70	1.80	4418	3093	0.70	1.94
27	22	5264	3053	0.58	1.72	5076	2944	0.58	1.85	4794	2781	0.58	1.97
28	16	4183	4099	0.98	1.60	3995	3915	0.98	1.72	3807	3731	0.98	1.86
28	18	4512	3880	0.86	1.64	4371	3759	0.86	1.77	4089	3517	0.86	1.90
28	20	4888	3617	0.74	1.69	4700	3478	0.74	1.80	4418	3269	0.74	1.94
28	22	5264	3264	0.62	1.72	5076	3147	0.62	1.85	4794	2972	0.62	1.97
30	16	4183	4183	1.00	1.60	3995	3995	1.00	1.72	3807	3807	1.00	1.86
30	18	4512	4241	0.94	1.64	4371	4109	0.94	1.77	4089	3844	0.94	1.90
30	20	4888	4008	0.82	1.69	4700	3854	0.82	1.80	4418	3623	0.82	1.94
30	22	5264	3685	0.70	1.72	5076	3553	0.70	1.85	4794	3356	0.70	1.97
32	16	4183	4183	1.00	1.60	3995	3995	1.00	1.72	3807	3807	1.00	1.86
32	18	4512	4512	1.00	1.64	4371	4371	1.00	1.77	4089	4089	1.00	1.90
32	20	4888	4399	0.90	1.69	4700	4230	0.90	1.80	4418	3976	0.90	1.94
32	22	5264	4106	0.78	1.72	5076	3959	0.78	1.85	4794	3739	0.78	1.97
34	16	4183	4183	1.00	1.60	3995	3995	1.00	1.72	3807	3807	1.00	1.86
34	18	4512	4512	1.00	1.64	4371	4371	1.00	1.77	4089	4089	1.00	1.90
34	20	4888	4790	0.98	1.69	4700	4606	0.98	1.80	4418	4330	0.98	1.94
34	22	5264	4527	0.86	1.72	5076	4365	0.86	1.85	4794	4123	0.86	1.97

Notes CA : Capacity (W)
P.C. : Power consumption (kW)
SHC(W) : Sensible heat capacity
SHF : Sensible heat factor

COOLING CAPACITY
PCA-RP2.5GA / PUHZ-RP2.5VHA

(230V)

Indoor Intake air D.B.(°C)	Indoor Intake air W.B.(°C)	Outdoor intake air D.B.(°C)											
		20				25				30			
		CA	SHC(W)	SHF	P.C.	CA	SHC(W)	SHF	P.C.	CA	SHC(W)	SHF	P.C.
20	16	5940	4217	0.71	1.30	5760	4090	0.71	1.38	5580	3962	0.71	1.46
20	18	6360	3752	0.59	1.33	6180	3646	0.59	1.40	5970	3522	0.59	1.50
20	20	6840	3215	0.47	1.37	6690	3144	0.47	1.43	6510	3060	0.47	1.53
22	16	5940	4693	0.79	1.30	5760	4550	0.79	1.38	5580	4408	0.79	1.46
22	18	6360	4261	0.67	1.33	6180	4141	0.67	1.40	5970	4000	0.67	1.50
22	20	6840	3762	0.55	1.37	6690	3680	0.55	1.43	6510	3581	0.55	1.53
24	16	5940	5168	0.87	1.30	5760	5011	0.87	1.38	5580	4855	0.87	1.46
24	18	6360	4770	0.75	1.33	6180	4635	0.75	1.40	5970	4478	0.75	1.50
24	20	6840	4309	0.63	1.37	6690	4215	0.63	1.43	6510	4101	0.63	1.53
24	22	7290	3718	0.51	1.40	7140	3641	0.51	1.48	6960	3550	0.51	1.58
26	16	5940	5643	0.95	1.30	5760	5472	0.95	1.38	5580	5301	0.95	1.46
26	18	6360	5279	0.83	1.33	6180	5129	0.83	1.40	5970	4955	0.83	1.50
26	20	6840	4856	0.71	1.37	6690	4750	0.71	1.43	6510	4622	0.71	1.53
26	22	7290	4301	0.59	1.40	7140	4213	0.59	1.48	6960	4106	0.59	1.58
27	16	5940	5881	0.99	1.30	5760	5702	0.99	1.38	5580	5524	0.99	1.46
27	18	6360	5533	0.87	1.33	6180	5377	0.87	1.40	5970	5194	0.87	1.50
27	20	6840	5130	0.75	1.37	6690	5018	0.75	1.43	6510	4883	0.75	1.53
27	22	7290	4593	0.63	1.40	7140	4498	0.63	1.48	6960	4385	0.63	1.58
28	16	5940	5940	1.00	1.30	5760	5760	1.00	1.38	5580	5580	1.00	1.46
28	18	6360	5788	0.91	1.33	6180	5624	0.91	1.40	5970	5433	0.91	1.50
28	20	6840	5404	0.79	1.37	6690	5285	0.79	1.43	6510	5143	0.79	1.53
28	22	7290	4884	0.67	1.40	7140	4784	0.67	1.48	6960	4663	0.67	1.58
30	16	5940	5940	1.00	1.30	5760	5760	1.00	1.38	5580	5580	1.00	1.46
30	18	6360	6296	0.99	1.33	6180	6118	0.99	1.40	5970	5910	0.99	1.50
30	20	6840	5951	0.87	1.37	6690	5820	0.87	1.43	6510	5664	0.87	1.53
30	22	7290	5468	0.75	1.40	7140	5355	0.75	1.48	6960	5220	0.75	1.58
32	16	5940	5940	1.00	1.30	5760	5760	1.00	1.38	5580	5580	1.00	1.46
32	18	6360	6360	1.00	1.33	6180	6180	1.00	1.40	5970	5970	1.00	1.50
32	20	6840	6498	0.95	1.37	6690	6356	0.95	1.43	6510	6185	0.95	1.53
32	22	7290	6051	0.83	1.40	7140	5926	0.83	1.48	6960	5777	0.83	1.58
34	16	5940	5940	1.00	1.30	5760	5760	1.00	1.38	5580	5580	1.00	1.46
34	18	6360	6360	1.00	1.33	6180	6180	1.00	1.40	5970	5970	1.00	1.50
34	20	6840	6840	1.00	1.37	6690	6690	1.00	1.43	6510	6510	1.00	1.53
34	22	7290	6634	0.91	1.40	7140	6497	0.91	1.48	6960	6334	0.91	1.58

Notes CA : Capacity (W)
P.C. : Power consumption (kW)
SHC(W) : Sensible heat capacity
SHF : Sensible heat factor

COOLING CAPACITY
PCA-RP2.5GA / PUHZ-RP2.5VHA

Indoor Intake air D.B.(°C)	Indoor Intake air W.B.(°C)	Outdoor intake air D.B.(°C)											
		35				40				45			
		CA	SHC(W)	SHF	P.C.	CA	SHC(W)	SHF	P.C.	CA	SHC(W)	SHF	P.C.
20	16	5340	3791	0.71	1.56	5100	3621	0.71	1.68	4860	3451	0.71	1.82
20	18	5760	3398	0.59	1.61	5580	3292	0.59	1.73	5220	3080	0.59	1.86
20	20	6240	2933	0.47	1.65	6000	2820	0.47	1.76	5640	2651	0.47	1.89
22	16	5340	4219	0.79	1.56	5100	4029	0.79	1.68	4860	3839	0.79	1.82
22	18	5760	3859	0.67	1.61	5580	3739	0.67	1.73	5220	3497	0.67	1.86
22	20	6240	3432	0.55	1.65	6000	3300	0.55	1.76	5640	3102	0.55	1.89
24	16	5340	4646	0.87	1.56	5100	4437	0.87	1.68	4860	4228	0.87	1.82
24	18	5760	4320	0.75	1.61	5580	4185	0.75	1.73	5220	3915	0.75	1.86
24	20	6240	3931	0.63	1.65	6000	3780	0.63	1.76	5640	3553	0.63	1.89
24	22	6720	3427	0.51	1.68	6480	3305	0.51	1.81	6120	3121	0.51	1.92
26	16	5340	5073	0.95	1.56	5100	4845	0.95	1.68	4860	4617	0.95	1.82
26	18	5760	4781	0.83	1.61	5580	4631	0.83	1.73	5220	4333	0.83	1.86
26	20	6240	4430	0.71	1.65	6000	4260	0.71	1.76	5640	4004	0.71	1.89
26	22	6720	3965	0.59	1.68	6480	3823	0.59	1.81	6120	3611	0.59	1.92
27	16	5340	5287	0.99	1.56	5100	5049	0.99	1.68	4860	4811	0.99	1.82
27	18	5760	5011	0.87	1.61	5580	4855	0.87	1.73	5220	4541	0.87	1.86
27	20	6240	4680	0.75	1.65	6000	4500	0.75	1.76	5640	4230	0.75	1.89
27	22	6720	4234	0.63	1.68	6480	4082	0.63	1.81	6120	3856	0.63	1.92
28	16	5340	5340	1.00	1.56	5100	5100	1.00	1.68	4860	4860	1.00	1.82
28	18	5760	5242	0.91	1.61	5580	5078	0.91	1.73	5220	4750	0.91	1.86
28	20	6240	4930	0.79	1.65	6000	4740	0.79	1.76	5640	4456	0.79	1.89
28	22	6720	4502	0.67	1.68	6480	4342	0.67	1.81	6120	4100	0.67	1.92
30	16	5340	5340	1.00	1.56	5100	5100	1.00	1.68	4860	4860	1.00	1.82
30	18	5760	5702	0.99	1.61	5580	5524	0.99	1.73	5220	5168	0.99	1.86
30	20	6240	5429	0.87	1.65	6000	5220	0.87	1.76	5640	4907	0.87	1.89
30	22	6720	5040	0.75	1.68	6480	4860	0.75	1.81	6120	4590	0.75	1.92
32	16	5340	5340	1.00	1.56	5100	5100	1.00	1.68	4860	4860	1.00	1.82
32	18	5760	5760	1.00	1.61	5580	5580	1.00	1.73	5220	5220	1.00	1.86
32	20	6240	5928	0.95	1.65	6000	5700	0.95	1.76	5640	5358	0.95	1.89
32	22	6720	5578	0.83	1.68	6480	5378	0.83	1.81	6120	5080	0.83	1.92
34	16	5340	5340	1.00	1.56	5100	5100	1.00	1.68	4860	4860	1.00	1.82
34	18	5760	5760	1.00	1.61	5580	5580	1.00	1.73	5220	5220	1.00	1.86
34	20	6240	6240	1.00	1.65	6000	6000	1.00	1.76	5640	5640	1.00	1.89
34	22	6720	6115	0.91	1.68	6480	5897	0.91	1.81	6120	5569	0.91	1.92

Notes CA : Capacity (W)
P.C. : Power consumption (kW)
SHC(W) : Sensible heat capacity
SHF : Sensible heat factor

COOLING CAPACITY
PCA-RP3GA / PUHZ-RP3VHA

Indoor Intake air D.B.(°C)	Indoor Intake air W.B.(°C)	Outdoor intake air D.B.(°C)											
		20				25				30			
		CA	SHC(W)	SHF	P.C.	CA	SHC(W)	SHF	P.C.	CA	SHC(W)	SHF	P.C.
20	16	7029	4499	0.64	1.71	6816	4362	0.64	1.81	6603	4226	0.64	1.92
20	18	7526	3914	0.52	1.74	7313	3803	0.52	1.84	7065	3674	0.52	1.97
20	20	8094	3238	0.40	1.80	7917	3167	0.40	1.88	7704	3081	0.40	2.01
22	16	7029	5061	0.72	1.71	6816	4908	0.72	1.81	6603	4754	0.72	1.92
22	18	7526	4516	0.60	1.74	7313	4388	0.60	1.84	7065	4239	0.60	1.97
22	20	8094	3885	0.48	1.80	7917	3800	0.48	1.88	7704	3698	0.48	2.01
24	16	7029	5623	0.80	1.71	6816	5453	0.80	1.81	6603	5282	0.80	1.92
24	18	7526	5118	0.68	1.74	7313	4973	0.68	1.84	7065	4804	0.68	1.97
24	20	8094	4533	0.56	1.80	7917	4433	0.56	1.88	7704	4314	0.56	2.01
24	22	8627	3796	0.44	1.84	8449	3718	0.44	1.95	8236	3624	0.44	2.08
26	16	7029	6186	0.88	1.71	6816	5998	0.88	1.81	6603	5811	0.88	1.92
26	18	7526	5720	0.76	1.74	7313	5558	0.76	1.84	7065	5369	0.76	1.97
26	20	8094	5180	0.64	1.80	7917	5067	0.64	1.88	7704	4930	0.64	2.01
26	22	8627	4486	0.52	1.84	8449	4393	0.52	1.95	8236	4283	0.52	2.08
27	16	7029	6467	0.92	1.71	6816	6271	0.92	1.81	6603	6075	0.92	1.92
27	18	7526	6021	0.80	1.74	7313	5850	0.80	1.84	7065	5652	0.80	1.97
27	20	8094	5504	0.68	1.80	7917	5383	0.68	1.88	7704	5238	0.68	2.01
27	22	8627	4831	0.56	1.84	8449	4731	0.56	1.95	8236	4612	0.56	2.08
28	16	7029	6748	0.96	1.71	6816	6543	0.96	1.81	6603	6339	0.96	1.92
28	18	7526	6322	0.84	1.74	7313	6143	0.84	1.84	7065	5934	0.84	1.97
28	20	8094	5828	0.72	1.80	7917	5700	0.72	1.88	7704	5547	0.72	2.01
28	22	8627	5176	0.60	1.84	8449	5069	0.60	1.95	8236	4942	0.60	2.08
30	16	7029	7029	1.00	1.71	6816	6816	1.00	1.81	6603	6603	1.00	1.92
30	18	7526	6924	0.92	1.74	7313	6728	0.92	1.84	7065	6499	0.92	1.97
30	20	8094	6475	0.80	1.80	7917	6333	0.80	1.88	7704	6163	0.80	2.01
30	22	8627	5866	0.68	1.84	8449	5745	0.68	1.95	8236	5600	0.68	2.08
32	16	7029	7029	1.00	1.71	6816	6816	1.00	1.81	6603	6603	1.00	1.92
32	18	7526	7526	1.00	1.74	7313	7313	1.00	1.84	7065	7065	1.00	1.97
32	20	8094	7123	0.88	1.80	7917	6967	0.88	1.88	7704	6779	0.88	2.01
32	22	8627	6556	0.76	1.84	8449	6421	0.76	1.95	8236	6259	0.76	2.08
34	16	7029	7029	1.00	1.71	6816	6816	1.00	1.81	6603	6603	1.00	1.92
34	18	7526	7526	1.00	1.74	7313	7313	1.00	1.84	7065	7065	1.00	1.97
34	20	8094	7770	0.96	1.80	7917	7600	0.96	1.88	7704	7395	0.96	2.01
34	22	8627	7246	0.84	1.84	8449	7097	0.84	1.95	8236	6918	0.84	2.08

Notes CA : Capacity (W)
P.C. : Power consumption (kW)
SHC(W) : Sensible heat capacity
SHF : Sensible heat factor

COOLING CAPACITY
PCA-RP3GA / PUHZ-RP3VHA

Indoor Intake air D.B.(°C)	Indoor Intake air W.B.(°C)	Outdoor intake air D.B.(°C)											
		35				40				45			
		CA	SHC(W)	SHF	P.C.	CA	SHC(W)	SHF	P.C.	CA	SHC(W)	SHF	P.C.
20	16	6319	4044	0.64	2.05	6035	3862	0.64	2.20	5751	3681	0.64	2.39
20	18	6816	3544	0.52	2.11	6603	3434	0.52	2.27	6177	3212	0.52	2.44
20	20	7384	2954	0.40	2.16	7100	2840	0.40	2.31	6674	2670	0.40	2.48
22	16	6319	4550	0.72	2.05	6035	4345	0.72	2.20	5751	4141	0.72	2.39
22	18	6816	4090	0.60	2.11	6603	3962	0.60	2.27	6177	3706	0.60	2.44
22	20	7384	3544	0.48	2.16	7100	3408	0.48	2.31	6674	3204	0.48	2.48
24	16	6319	5055	0.80	2.05	6035	4828	0.80	2.20	5751	4601	0.80	2.39
24	18	6816	4635	0.68	2.11	6603	4490	0.68	2.27	6177	4200	0.68	2.44
24	20	7384	4135	0.56	2.16	7100	3976	0.56	2.31	6674	3737	0.56	2.48
24	22	7952	3499	0.44	2.20	7668	3374	0.44	2.38	7242	3186	0.44	2.53
26	16	6319	5561	0.88	2.05	6035	5311	0.88	2.20	5751	5061	0.88	2.39
26	18	6816	5180	0.76	2.11	6603	5018	0.76	2.27	6177	4695	0.76	2.44
26	20	7384	4726	0.64	2.16	7100	4544	0.64	2.31	6674	4271	0.64	2.48
26	22	7952	4135	0.52	2.20	7668	3987	0.52	2.38	7242	3766	0.52	2.53
27	16	6319	5813	0.92	2.05	6035	5552	0.92	2.20	5751	5291	0.92	2.39
27	18	6816	5453	0.80	2.11	6603	5282	0.80	2.27	6177	4942	0.80	2.44
27	20	7384	5021	0.68	2.16	7100	4828	0.68	2.31	6674	4538	0.68	2.48
27	22	7952	4453	0.56	2.20	7668	4294	0.56	2.38	7242	4056	0.56	2.53
28	16	6319	6066	0.96	2.05	6035	5794	0.96	2.20	5751	5521	0.96	2.39
28	18	6816	5725	0.84	2.11	6603	5547	0.84	2.27	6177	5189	0.84	2.44
28	20	7384	5316	0.72	2.16	7100	5112	0.72	2.31	6674	4805	0.72	2.48
28	22	7952	4771	0.60	2.20	7668	4601	0.60	2.38	7242	4345	0.60	2.53
30	16	6319	6319	1.00	2.05	6035	6035	1.00	2.20	5751	5751	1.00	2.39
30	18	6816	6271	0.92	2.11	6603	6075	0.92	2.27	6177	5683	0.92	2.44
30	20	7384	5907	0.80	2.16	7100	5680	0.80	2.31	6674	5339	0.80	2.48
30	22	7952	5407	0.68	2.20	7668	5214	0.68	2.38	7242	4925	0.68	2.53
32	16	6319	6319	1.00	2.05	6035	6035	1.00	2.20	5751	5751	1.00	2.39
32	18	6816	6816	1.00	2.11	6603	6603	1.00	2.27	6177	6177	1.00	2.44
32	20	7384	6498	0.88	2.16	7100	6248	0.88	2.31	6674	5873	0.88	2.48
32	22	7952	6044	0.76	2.20	7668	5828	0.76	2.38	7242	5504	0.76	2.53
34	16	6319	6319	1.00	2.05	6035	6035	1.00	2.20	5751	5751	1.00	2.39
34	18	6816	6816	1.00	2.11	6603	6603	1.00	2.27	6177	6177	1.00	2.44
34	20	7384	7089	0.96	2.16	7100	6816	0.96	2.31	6674	6407	0.96	2.48
34	22	7952	6680	0.84	2.20	7668	6441	0.84	2.38	7242	6083	0.84	2.53

Notes CA : Capacity (W)
P.C. : Power consumption (kW)
SHC(W) : Sensible heat capacity
SHF : Sensible heat factor

COOLING CAPACITY
PCA-RP4GA / PUHZ-RP4VHA

Indoor Intake air D.B.(°C)	Indoor Intake air W.B.(°C)	Outdoor intake air D.B.(°C)											
		20				25				30			
		CA	SHC(W)	SHF	P.C.	CA	SHC(W)	SHF	P.C.	CA	SHC(W)	SHF	P.C.
20	16	9900	6435	0.65	2.34	9600	6240	0.65	2.47	9300	6045	0.65	2.61
20	18	10600	5618	0.53	2.38	10300	5459	0.53	2.51	9950	5274	0.53	2.69
20	20	11400	4674	0.41	2.45	11150	4572	0.41	2.57	10850	4449	0.41	2.74
22	16	9900	7227	0.73	2.34	9600	7008	0.73	2.47	9300	6789	0.73	2.61
22	18	10600	6466	0.61	2.38	10300	6283	0.61	2.51	9950	6070	0.61	2.69
22	20	11400	5586	0.49	2.45	11150	5464	0.49	2.57	10850	5317	0.49	2.74
24	16	9900	8019	0.81	2.34	9600	7776	0.81	2.47	9300	7533	0.81	2.61
24	18	10600	7314	0.69	2.38	10300	7107	0.69	2.51	9950	6866	0.69	2.69
24	20	11400	6498	0.57	2.45	11150	6356	0.57	2.57	10850	6185	0.57	2.74
24	22	12150	5468	0.45	2.51	11900	5355	0.45	2.66	11600	5220	0.45	2.83
26	16	9900	8811	0.89	2.34	9600	8544	0.89	2.47	9300	8277	0.89	2.61
26	18	10600	8162	0.77	2.38	10300	7931	0.77	2.51	9950	7662	0.77	2.69
26	20	11400	7410	0.65	2.45	11150	7248	0.65	2.57	10850	7053	0.65	2.74
26	22	12150	6440	0.53	2.51	11900	6307	0.53	2.66	11600	6148	0.53	2.83
27	16	9900	9207	0.93	2.34	9600	8928	0.93	2.47	9300	8649	0.93	2.61
27	18	10600	8586	0.81	2.38	10300	8343	0.81	2.51	9950	8060	0.81	2.69
27	20	11400	7866	0.69	2.45	11150	7694	0.69	2.57	10850	7487	0.69	2.74
27	22	12150	6926	0.57	2.51	11900	6783	0.57	2.66	11600	6612	0.57	2.83
28	16	9900	9603	0.97	2.34	9600	9312	0.97	2.47	9300	9021	0.97	2.61
28	18	10600	9010	0.85	2.38	10300	8755	0.85	2.51	9950	8458	0.85	2.69
28	20	11400	8322	0.73	2.45	11150	8140	0.73	2.57	10850	7921	0.73	2.74
28	22	12150	7412	0.61	2.51	11900	7259	0.61	2.66	11600	7076	0.61	2.83
30	16	9900	9900	1.00	2.34	9600	9600	1.00	2.47	9300	9300	1.00	2.61
30	18	10600	9858	0.93	2.38	10300	9579	0.93	2.51	9950	9254	0.93	2.69
30	20	11400	9234	0.81	2.45	11150	9032	0.81	2.57	10850	8789	0.81	2.74
30	22	12150	8384	0.69	2.51	11900	8211	0.69	2.66	11600	8004	0.69	2.83
32	16	9900	9900	1.00	2.34	9600	9600	1.00	2.47	9300	9300	1.00	2.61
32	18	10600	10600	1.00	2.38	10300	10300	1.00	2.51	9950	9950	1.00	2.69
32	20	11400	10146	0.89	2.45	11150	9924	0.89	2.57	10850	9657	0.89	2.74
32	22	12150	9356	0.77	2.51	11900	9163	0.77	2.66	11600	8932	0.77	2.83
34	16	9900	9900	1.00	2.34	9600	9600	1.00	2.47	9300	9300	1.00	2.61
34	18	10600	10600	1.00	2.38	10300	10300	1.00	2.51	9950	9950	1.00	2.69
34	20	11400	11058	0.97	2.45	11150	10816	0.97	2.57	10850	10525	0.97	2.74
34	22	12150	10328	0.85	2.51	11900	10115	0.85	2.66	11600	9860	0.85	2.83

Notes CA : Capacity (W)
P.C. : Power consumption (kW)
SHC(W) : Sensible heat capacity
SHF : Sensible heat factor

COOLING CAPACITY
PCA-RP4GA / PUHZ-RP4VHA

Indoor Intake air D.B.(°C)	Indoor Intake air W.B.(°C)	Outdoor intake air D.B.(°C)											
		35				40				45			
		CA	SHC(W)	SHF	P.C.	CA	SHC(W)	SHF	P.C.	CA	SHC(W)	SHF	P.C.
20	16	8900	5785	0.65	2.80	8500	5525	0.65	3.01	8100	5265	0.65	3.26
20	18	9600	5088	0.53	2.88	9300	4929	0.53	3.10	8700	4611	0.53	3.33
20	20	10400	4264	0.41	2.95	10000	4100	0.41	3.15	9400	3854	0.41	3.39
22	16	8900	6497	0.73	2.80	8500	6205	0.73	3.01	8100	5913	0.73	3.26
22	18	9600	5856	0.61	2.88	9300	5673	0.61	3.10	8700	5307	0.61	3.33
22	20	10400	5096	0.49	2.95	10000	4900	0.49	3.15	9400	4606	0.49	3.39
24	16	8900	7209	0.81	2.80	8500	6885	0.81	3.01	8100	6561	0.81	3.26
24	18	9600	6624	0.69	2.88	9300	6417	0.69	3.10	8700	6003	0.69	3.33
24	20	10400	5928	0.57	2.95	10000	5700	0.57	3.15	9400	5358	0.57	3.39
24	22	11200	5040	0.45	3.01	10800	4860	0.45	3.24	10200	4590	0.45	3.45
26	16	8900	7921	0.89	2.80	8500	7565	0.89	3.01	8100	7209	0.89	3.26
26	18	9600	7392	0.77	2.88	9300	7161	0.77	3.10	8700	6699	0.77	3.33
26	20	10400	6760	0.65	2.95	10000	6500	0.65	3.15	9400	6110	0.65	3.39
26	22	11200	5936	0.53	3.01	10800	5724	0.53	3.24	10200	5406	0.53	3.45
27	16	8900	8277	0.93	2.80	8500	7905	0.93	3.01	8100	7533	0.93	3.26
27	18	9600	7776	0.81	2.88	9300	7533	0.81	3.10	8700	7047	0.81	3.33
27	20	10400	7176	0.69	2.95	10000	6900	0.69	3.15	9400	6486	0.69	3.39
27	22	11200	6384	0.57	3.01	10800	6156	0.57	3.24	10200	5814	0.57	3.45
28	16	8900	8633	0.97	2.80	8500	8245	0.97	3.01	8100	7857	0.97	3.26
28	18	9600	8160	0.85	2.88	9300	7905	0.85	3.10	8700	7395	0.85	3.33
28	20	10400	7592	0.73	2.95	10000	7300	0.73	3.15	9400	6862	0.73	3.39
28	22	11200	6832	0.61	3.01	10800	6588	0.61	3.24	10200	6222	0.61	3.45
30	16	8900	8900	1.00	2.80	8500	8500	1.00	3.01	8100	8100	1.00	3.26
30	18	9600	8928	0.93	2.88	9300	8649	0.93	3.10	8700	8091	0.93	3.33
30	20	10400	8424	0.81	2.95	10000	8100	0.81	3.15	9400	7614	0.81	3.39
30	22	11200	7728	0.69	3.01	10800	7452	0.69	3.24	10200	7038	0.69	3.45
32	16	8900	8900	1.00	2.80	8500	8500	1.00	3.01	8100	8100	1.00	3.26
32	18	9600	9600	1.00	2.88	9300	9300	1.00	3.10	8700	8700	1.00	3.33
32	20	10400	9256	0.89	2.95	10000	8900	0.89	3.15	9400	8366	0.89	3.39
32	22	11200	8624	0.77	3.01	10800	8316	0.77	3.24	10200	7854	0.77	3.45
34	16	8900	8900	1.00	2.80	8500	8500	1.00	3.01	8100	8100	1.00	3.26
34	18	9600	9600	1.00	2.88	9300	9300	1.00	3.10	8700	8700	1.00	3.33
34	20	10400	10088	0.97	2.95	10000	9700	0.97	3.15	9400	9118	0.97	3.39
34	22	11200	9520	0.85	3.01	10800	9180	0.85	3.24	10200	8670	0.85	3.45

Notes CA : Capacity (W)
P.C. : Power consumption (kW)
SHC(W) : Sensible heat capacity
SHF : Sensible heat factor

COOLING CAPACITY
PCA-RP5GA / PUHZ-RP5VHA

Indoor Intake air D.B.(°C)	Indoor Intake air W.B.(°C)	Outdoor intake air D.B.(°C)											
		20				25				30			
		CA	SHC(W)	SHF	P.C.	CA	SHC(W)	SHF	P.C.	CA	SHC(W)	SHF	P.C.
20	16	12375	8291	0.67	3.11	12000	8040	0.67	3.29	11625	7789	0.67	3.48
20	18	13250	7288	0.55	3.17	12875	7081	0.55	3.35	12438	6841	0.55	3.58
20	20	14250	6128	0.43	3.27	13938	5993	0.43	3.42	13563	5832	0.43	3.66
22	16	12375	9281	0.75	3.11	12000	9000	0.75	3.29	11625	8719	0.75	3.48
22	18	13250	8348	0.63	3.17	12875	8111	0.63	3.35	12438	7836	0.63	3.58
22	20	14250	7268	0.51	3.27	13938	7108	0.51	3.42	13563	6917	0.51	3.66
24	16	12375	10271	0.83	3.11	12000	9960	0.83	3.29	11625	9649	0.83	3.48
24	18	13250	9408	0.71	3.17	12875	9141	0.71	3.35	12438	8831	0.71	3.58
24	20	14250	8408	0.59	3.27	13938	8223	0.59	3.42	13563	8002	0.59	3.66
24	22	15188	7138	0.47	3.35	14875	6991	0.47	3.54	14500	6815	0.47	3.77
26	16	12375	11261	0.91	3.11	12000	10920	0.91	3.29	11625	10579	0.91	3.48
26	18	13250	10468	0.79	3.17	12875	10171	0.79	3.35	12438	9826	0.79	3.58
26	20	14250	9548	0.67	3.27	13938	9338	0.67	3.42	13563	9087	0.67	3.66
26	22	15188	8353	0.55	3.35	14875	8181	0.55	3.54	14500	7975	0.55	3.77
27	16	12375	11756	0.95	3.11	12000	11400	0.95	3.29	11625	11044	0.95	3.48
27	18	13250	10998	0.83	3.17	12875	10686	0.83	3.35	12438	10323	0.83	3.58
27	20	14250	10118	0.71	3.27	13938	9896	0.71	3.42	13563	9629	0.71	3.66
27	22	15188	8961	0.59	3.35	14875	8776	0.59	3.54	14500	8555	0.59	3.77
28	16	12375	12251	0.99	3.11	12000	11880	0.99	3.29	11625	11509	0.99	3.48
28	18	13250	11528	0.87	3.17	12875	11201	0.87	3.35	12438	10821	0.87	3.58
28	20	14250	10688	0.75	3.27	13938	10453	0.75	3.42	13563	10172	0.75	3.66
28	22	15188	9568	0.63	3.35	14875	9371	0.63	3.54	14500	9135	0.63	3.77
30	16	12375	12375	1.00	3.11	12000	12000	1.00	3.29	11625	11625	1.00	3.48
30	18	13250	12588	0.95	3.17	12875	12231	0.95	3.35	12438	11816	0.95	3.58
30	20	14250	11828	0.83	3.27	13938	11568	0.83	3.42	13563	11257	0.83	3.66
30	22	15188	10783	0.71	3.35	14875	10561	0.71	3.54	14500	10295	0.71	3.77
32	16	12375	12375	1.00	3.11	12000	12000	1.00	3.29	11625	11625	1.00	3.48
32	18	13250	13250	1.00	3.17	12875	12875	1.00	3.35	12438	12438	1.00	3.58
32	20	14250	12968	0.91	3.27	13938	12683	0.91	3.42	13563	12342	0.91	3.66
32	22	15188	11998	0.79	3.35	14875	11751	0.79	3.54	14500	11455	0.79	3.77
34	16	12375	12375	1.00	3.11	12000	12000	1.00	3.29	11625	11625	1.00	3.48
34	18	13250	13250	1.00	3.17	12875	12875	1.00	3.35	12438	12438	1.00	3.58
34	20	14250	14108	0.99	3.27	13938	13798	0.99	3.42	13563	13427	0.99	3.66
34	22	15188	13213	0.87	3.35	14875	12941	0.87	3.54	14500	12615	0.87	3.77

Notes CA : Capacity (W)
P.C. : Power consumption (kW)
SHC(W) : Sensible heat capacity
SHF : Sensible heat factor

COOLING CAPACITY
PCA-RP5GA / PUHZ-RP5VHA

Indoor Intake air D.B.(°C)	Indoor Intake air W.B.(°C)	Outdoor intake air D.B.(°C)											
		35				40				45			
		CA	SHC(W)	SHF	P.C.	CA	SHC(W)	SHF	P.C.	CA	SHC(W)	SHF	P.C.
20	16	11125	7454	0.67	3.73	10625	7119	0.67	4.01	10125	6784	0.67	4.34
20	18	12000	6600	0.55	3.83	11625	6394	0.55	4.12	10875	5981	0.55	4.43
20	20	13000	5590	0.43	3.93	12500	5375	0.43	4.20	11750	5053	0.43	4.51
22	16	11125	8344	0.75	3.73	10625	7969	0.75	4.01	10125	7594	0.75	4.34
22	18	12000	7560	0.63	3.83	11625	7324	0.63	4.12	10875	6851	0.63	4.43
22	20	13000	6630	0.51	3.93	12500	6375	0.51	4.20	11750	5993	0.51	4.51
24	16	11125	9234	0.83	3.73	10625	8819	0.83	4.01	10125	8404	0.83	4.34
24	18	12000	8520	0.71	3.83	11625	8254	0.71	4.12	10875	7721	0.71	4.43
24	20	13000	7670	0.59	3.93	12500	7375	0.59	4.20	11750	6933	0.59	4.51
24	22	14000	6580	0.47	4.01	13500	6345	0.47	4.32	12750	5993	0.47	4.59
26	16	11125	10124	0.91	3.73	10625	9669	0.91	4.01	10125	9214	0.91	4.34
26	18	12000	9480	0.79	3.83	11625	9184	0.79	4.12	10875	8591	0.79	4.43
26	20	13000	8710	0.67	3.93	12500	8375	0.67	4.20	11750	7873	0.67	4.51
26	22	14000	7700	0.55	4.01	13500	7425	0.55	4.32	12750	7013	0.55	4.59
27	16	11125	10569	0.95	3.73	10625	10094	0.95	4.01	10125	9619	0.95	4.34
27	18	12000	9960	0.83	3.83	11625	9649	0.83	4.12	10875	9026	0.83	4.43
27	20	13000	9230	0.71	3.93	12500	8875	0.71	4.20	11750	8343	0.71	4.51
27	22	14000	8260	0.59	4.01	13500	7965	0.59	4.32	12750	7523	0.59	4.59
28	16	11125	11014	0.99	3.73	10625	10519	0.99	4.01	10125	10024	0.99	4.34
28	18	12000	10440	0.87	3.83	11625	10114	0.87	4.12	10875	9461	0.87	4.43
28	20	13000	9750	0.75	3.93	12500	9375	0.75	4.20	11750	8813	0.75	4.51
28	22	14000	8820	0.63	4.01	13500	8505	0.63	4.32	12750	8033	0.63	4.59
30	16	11125	11125	1.00	3.73	10625	10625	1.00	4.01	10125	10125	1.00	4.34
30	18	12000	11400	0.95	3.83	11625	11044	0.95	4.12	10875	10331	0.95	4.43
30	20	13000	10790	0.83	3.93	12500	10375	0.83	4.20	11750	9753	0.83	4.51
30	22	14000	9940	0.71	4.01	13500	9585	0.71	4.32	12750	9053	0.71	4.59
32	16	11125	11125	1.00	3.73	10625	10625	1.00	4.01	10125	10125	1.00	4.34
32	18	12000	12000	1.00	3.83	11625	11625	1.00	4.12	10875	10875	1.00	4.43
32	20	13000	11830	0.91	3.93	12500	11375	0.91	4.20	11750	10693	0.91	4.51
32	22	14000	11060	0.79	4.01	13500	10665	0.79	4.32	12750	10073	0.79	4.59
34	16	11125	11125	1.00	3.73	10625	10625	1.00	4.01	10125	10125	1.00	4.34
34	18	12000	12000	1.00	3.83	11625	11625	1.00	4.12	10875	10875	1.00	4.43
34	20	13000	12870	0.99	3.93	12500	12375	0.99	4.20	11750	11633	0.99	4.51
34	22	14000	12180	0.87	4.01	13500	11745	0.87	4.32	12750	11093	0.87	4.59

Notes CA : Capacity (W)
P.C. : Power consumption (kW)
SHC(W) : Sensible heat capacity
SHF : Sensible heat factor

COOLING CAPACITY
PCA-RP6GA / PUHZ-RP6VHA

Indoor Intake air D.B.(°C)	Indoor Intake air W.B.(°C)	Outdoor intake air D.B.(°C)											
		20				25				30			
		CA	SHC(W)	SHF	P.C.	CA	SHC(W)	SHF	P.C.	CA	SHC(W)	SHF	P.C.
20	16	13860	8870	0.64	3.97	13440	8602	0.64	4.19	13020	8333	0.64	4.44
20	18	14840	7717	0.52	4.04	14420	7498	0.52	4.27	13930	7244	0.52	4.56
20	20	15960	6384	0.40	4.17	15610	6244	0.40	4.36	15190	6076	0.40	4.66
22	16	13860	9979	0.72	3.97	13440	9677	0.72	4.19	13020	9374	0.72	4.44
22	18	14840	8904	0.60	4.04	14420	8652	0.60	4.27	13930	8358	0.60	4.56
22	20	15960	7661	0.48	4.17	15610	7493	0.48	4.36	15190	7291	0.48	4.66
24	16	13860	11088	0.80	3.97	13440	10752	0.80	4.19	13020	10416	0.80	4.44
24	18	14840	10091	0.68	4.04	14420	9806	0.68	4.27	13930	9472	0.68	4.56
24	20	15960	8938	0.56	4.17	15610	8742	0.56	4.36	15190	8506	0.56	4.66
24	22	17010	7484	0.44	4.27	16660	7330	0.44	4.51	16240	7146	0.44	4.81
26	16	13860	12197	0.88	3.97	13440	11827	0.88	4.19	13020	11458	0.88	4.44
26	18	14840	11278	0.76	4.04	14420	10959	0.76	4.27	13930	10587	0.76	4.56
26	20	15960	10214	0.64	4.17	15610	9990	0.64	4.36	15190	9722	0.64	4.66
26	22	17010	8845	0.52	4.27	16660	8663	0.52	4.51	16240	8445	0.52	4.81
27	16	13860	12751	0.92	3.97	13440	12365	0.92	4.19	13020	11978	0.92	4.44
27	18	14840	11872	0.80	4.04	14420	11536	0.80	4.27	13930	11144	0.80	4.56
27	20	15960	10853	0.68	4.17	15610	10615	0.68	4.36	15190	10329	0.68	4.66
27	22	17010	9526	0.56	4.27	16660	9330	0.56	4.51	16240	9094	0.56	4.81
28	16	13860	13306	0.96	3.97	13440	12902	0.96	4.19	13020	12499	0.96	4.44
28	18	14840	12466	0.84	4.04	14420	12113	0.84	4.27	13930	11701	0.84	4.56
28	20	15960	11491	0.72	4.17	15610	11239	0.72	4.36	15190	10937	0.72	4.66
28	22	17010	10206	0.60	4.27	16660	9996	0.60	4.51	16240	9744	0.60	4.81
30	16	13860	13860	1.00	3.97	13440	13440	1.00	4.19	13020	13020	1.00	4.44
30	18	14840	13653	0.92	4.04	14420	13266	0.92	4.27	13930	12816	0.92	4.56
30	20	15960	12768	0.80	4.17	15610	12488	0.80	4.36	15190	12152	0.80	4.66
30	22	17010	11567	0.68	4.27	16660	11329	0.68	4.51	16240	11043	0.68	4.81
32	16	13860	13860	1.00	3.97	13440	13440	1.00	4.19	13020	13020	1.00	4.44
32	18	14840	14840	1.00	4.04	14420	14420	1.00	4.27	13930	13930	1.00	4.56
32	20	15960	14045	0.88	4.17	15610	13737	0.88	4.36	15190	13367	0.88	4.66
32	22	17010	12928	0.76	4.27	16660	12662	0.76	4.51	16240	12342	0.76	4.81
34	16	13860	13860	1.00	3.97	13440	13440	1.00	4.19	13020	13020	1.00	4.44
34	18	14840	14840	1.00	4.04	14420	14420	1.00	4.27	13930	13930	1.00	4.56
34	20	15960	15322	0.96	4.17	15610	14986	0.96	4.36	15190	14582	0.96	4.66
34	22	17010	14288	0.84	4.27	16660	13994	0.84	4.51	16240	13642	0.84	4.81

Notes CA : Capacity (W)
P.C. : Power consumption (kW)
SHC(W) : Sensible heat capacity
SHF : Sensible heat factor

COOLING CAPACITY
PCA-RP6GA / PUHZ-RP6VHA

Indoor Intake air D.B.(°C)	Indoor Intake air W.B.(°C)	Outdoor intake air D.B.(°C)											
		35				40				45			
		CA	SHC(W)	SHF	P.C.	CA	SHC(W)	SHF	P.C.	CA	SHC(W)	SHF	P.C.
20	16	12460	7974	0.64	4.76	11900	7616	0.64	5.11	11340	7258	0.64	5.53
20	18	13440	6989	0.52	4.89	13020	6770	0.52	5.26	12180	6334	0.52	5.65
20	20	14560	5824	0.40	5.01	14000	5600	0.40	5.36	13160	5264	0.40	5.75
22	16	12460	8971	0.72	4.76	11900	8568	0.72	5.11	11340	8165	0.72	5.53
22	18	13440	8064	0.60	4.89	13020	7812	0.60	5.26	12180	7308	0.60	5.65
22	20	14560	6989	0.48	5.01	14000	6720	0.48	5.36	13160	6317	0.48	5.75
24	16	12460	9968	0.80	4.76	11900	9520	0.80	5.11	11340	9072	0.80	5.53
24	18	13440	9139	0.68	4.89	13020	8854	0.68	5.26	12180	8282	0.68	5.65
24	20	14560	8154	0.56	5.01	14000	7840	0.56	5.36	13160	7370	0.56	5.75
24	22	15680	6899	0.44	5.11	15120	6653	0.44	5.51	14280	6283	0.44	5.85
26	16	12460	10965	0.88	4.76	11900	10472	0.88	5.11	11340	9979	0.88	5.53
26	18	13440	10214	0.76	4.89	13020	9895	0.76	5.26	12180	9257	0.76	5.65
26	20	14560	9318	0.64	5.01	14000	8960	0.64	5.36	13160	8422	0.64	5.75
26	22	15680	8154	0.52	5.11	15120	7862	0.52	5.51	14280	7426	0.52	5.85
27	16	12460	11463	0.92	4.76	11900	10948	0.92	5.11	11340	10433	0.92	5.53
27	18	13440	10752	0.80	4.89	13020	10416	0.80	5.26	12180	9744	0.80	5.65
27	20	14560	9901	0.68	5.01	14000	9520	0.68	5.36	13160	8949	0.68	5.75
27	22	15680	8781	0.56	5.11	15120	8467	0.56	5.51	14280	7997	0.56	5.85
28	16	12460	11962	0.96	4.76	11900	11424	0.96	5.11	11340	10886	0.96	5.53
28	18	13440	11290	0.84	4.89	13020	10937	0.84	5.26	12180	10231	0.84	5.65
28	20	14560	10483	0.72	5.01	14000	10080	0.72	5.36	13160	9475	0.72	5.75
28	22	15680	9408	0.60	5.11	15120	9072	0.60	5.51	14280	8568	0.60	5.85
30	16	12460	12460	1.00	4.76	11900	11900	1.00	5.11	11340	11340	1.00	5.53
30	18	13440	12365	0.92	4.89	13020	11978	0.92	5.26	12180	11206	0.92	5.65
30	20	14560	11648	0.80	5.01	14000	11200	0.80	5.36	13160	10528	0.80	5.75
30	22	15680	10662	0.68	5.11	15120	10282	0.68	5.51	14280	9710	0.68	5.85
32	16	12460	12460	1.00	4.76	11900	11900	1.00	5.11	11340	11340	1.00	5.53
32	18	13440	13440	1.00	4.89	13020	13020	1.00	5.26	12180	12180	1.00	5.65
32	20	14560	12813	0.88	5.01	14000	12320	0.88	5.36	13160	11581	0.88	5.75
32	22	15680	11917	0.76	5.11	15120	11491	0.76	5.51	14280	10853	0.76	5.85
34	16	12460	12460	1.00	4.76	11900	11900	1.00	5.11	11340	11340	1.00	5.53
34	18	13440	13440	1.00	4.89	13020	13020	1.00	5.26	12180	12180	1.00	5.65
34	20	14560	13978	0.96	5.01	14000	13440	0.96	5.36	13160	12634	0.96	5.75
34	22	15680	13171	0.84	5.11	15120	12701	0.84	5.51	14280	11995	0.84	5.85

Notes CA : Capacity (W)
P.C. : Power consumption (kW)
SHC(W) : Sensible heat capacity
SHF : Sensible heat factor

HEATING CAPACITY PCA-RP•GA / PUHZ-RP•VHA

Service Ref.	Indoor Intake air D.B.(°C)	Outdoor intake air W.B.(°C)											
		-10		-5		0		5		10		15	
		CA	P.C.	CA	P.C.	CA	P.C.	CA	P.C.	CA	P.C.	CA	P.C.
PCA-RP2GA	15	3493	1.01	3795	1.11	4235	1.28	5555	1.54	6270	1.71	6985	1.85
	20	3355	1.09	3630	1.20	4015	1.39	5363	1.66	6050	1.85	6738	1.98
	25	3245	1.16	3520	1.30	3850	1.50	5060	1.76	5830	1.98	6490	2.13
PCA-RP2.5GA	15	4445	1.20	4830	1.32	5390	1.52	7070	1.83	7980	2.03	8890	2.19
	20	4270	1.30	4620	1.42	5110	1.64	6825	1.97	7700	2.19	8575	2.35
	25	4130	1.38	4480	1.54	4900	1.79	6440	2.09	7420	2.34	8260	2.53
PCA-RP3GA	15	5080	1.43	5520	1.58	6160	1.82	8080	2.19	9120	2.43	10160	2.62
	20	4880	1.56	5280	1.70	5840	1.97	7800	2.36	8800	2.62	9800	2.82
	25	4720	1.65	5120	1.85	5600	2.14	7360	2.50	8480	2.81	9440	3.03
PCA-RP4GA	15	7112	1.92	7728	2.12	8624	2.45	11312	2.93	12768	3.26	14224	3.52
	20	6832	2.09	7392	2.28	8176	2.64	10920	3.16	12320	3.52	13720	3.78
	25	6608	2.22	7168	2.48	7840	2.87	10304	3.36	11872	3.77	13216	4.06
PCA-RP5GA	15	8890	2.56	9660	2.82	10780	3.26	14140	3.91	15960	4.34	17780	4.69
	20	8540	2.78	9240	3.04	10220	3.52	13650	4.21	15400	4.69	17150	5.03
	25	8260	2.95	8960	3.30	9800	3.82	12880	4.47	14840	5.01	16520	5.40
PCA-RP6GA	15	10160	2.71	11040	2.99	12320	3.45	16160	4.14	18240	4.60	20320	4.97
	20	9760	2.94	10560	3.22	11680	3.73	15600	4.46	17600	4.97	19600	5.34
	25	9440	3.13	10240	3.50	11200	4.05	14720	4.74	16960	5.31	18880	5.73

NOTE : CA: Capacity(W) P.C. : Power consumption(kW)

A.3.6.2 PERFORMANCE CURVES

Cooling performance curve(50Hz)

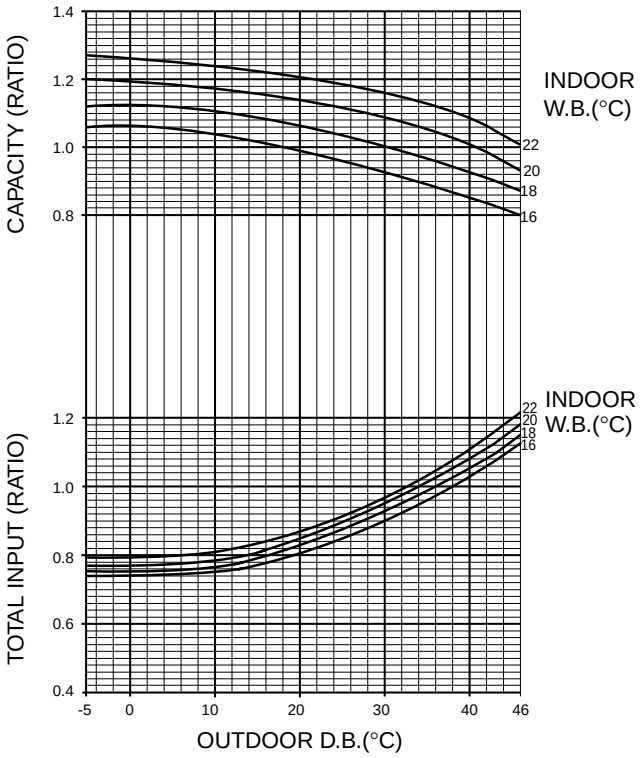

Heating performance curve(50Hz)

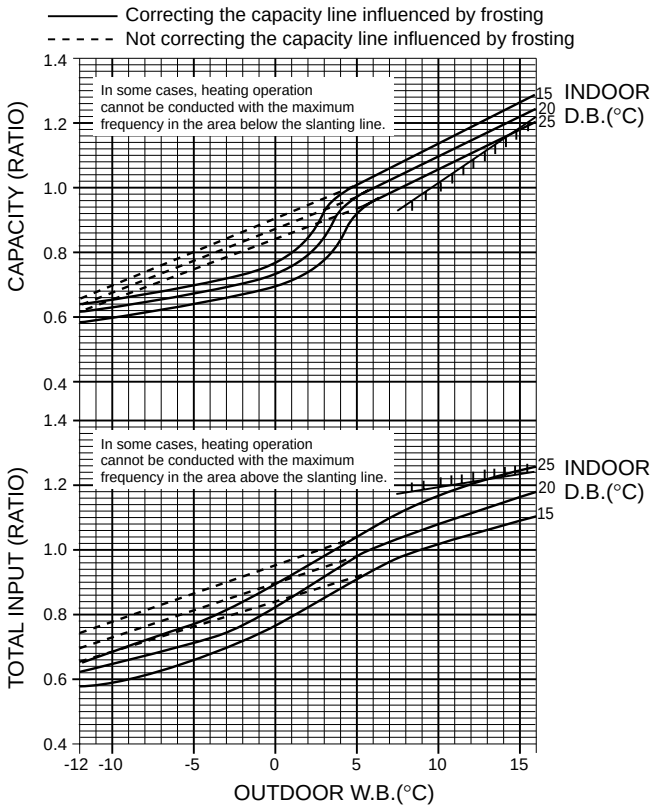

A.3.7 NOISE CRITERIA CURVES

PCA-RP2GA

NOTCH	SPL(dB)	LINE
Hi	42	○——○
Mi1	40	△——△
Mi2	38	●——●
Lo	37	▲——▲

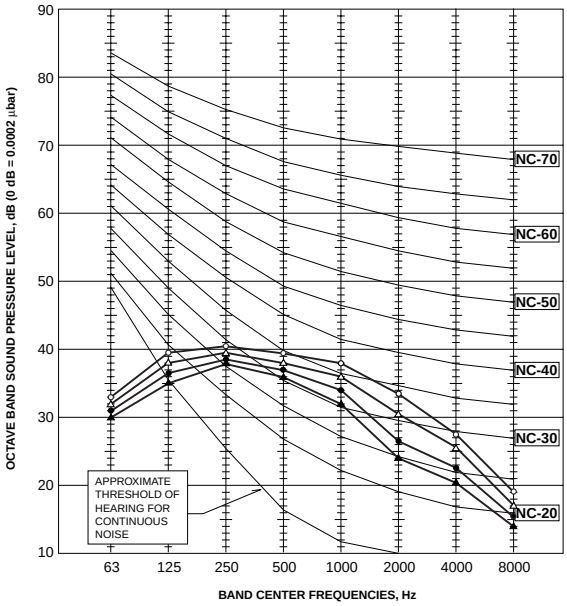

PCA-RP2.5GA
PCA-RP3GA

NOTCH	SPL(dB)	LINE
Hi	43	○——○
Mi1	41	△——△
Mi2	39	●——●
Lo	37	▲——▲

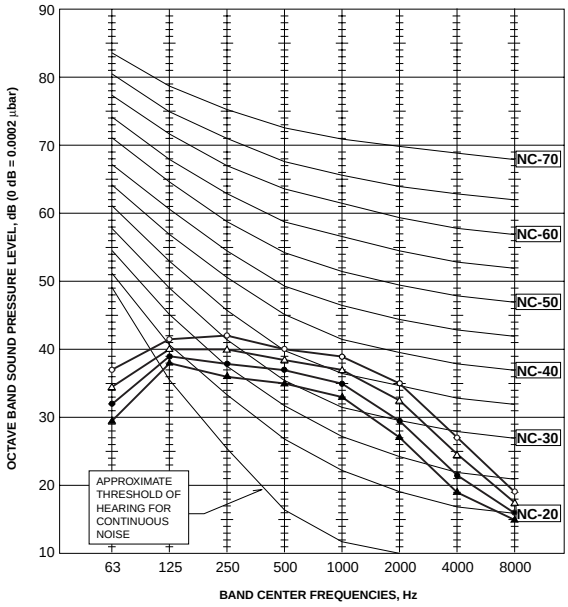

PCA-RP4GA

NOTCH	SPL(dB)	LINE
Hi	45	○——○
Mi1	43	△——△
Mi2	41	●——●
Lo	40	▲——▲

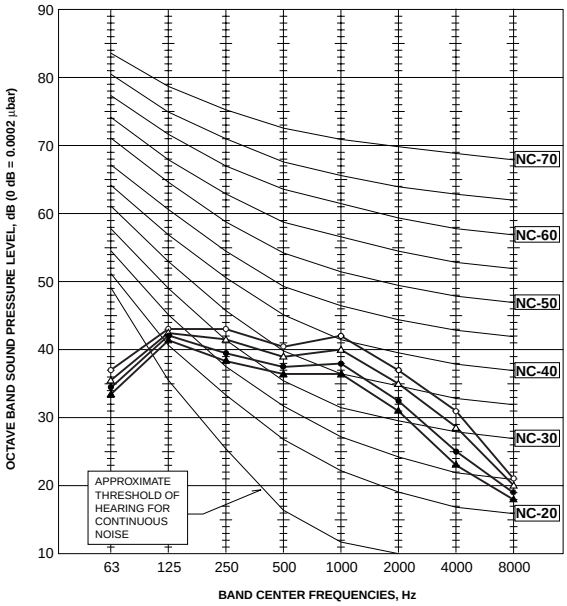

PCA-RP5GA

NOTCH	SPL(dB)	LINE
Hi	46	○——○
Mi1	45	△——△
Mi2	43	●——●
Lo	41	▲——▲

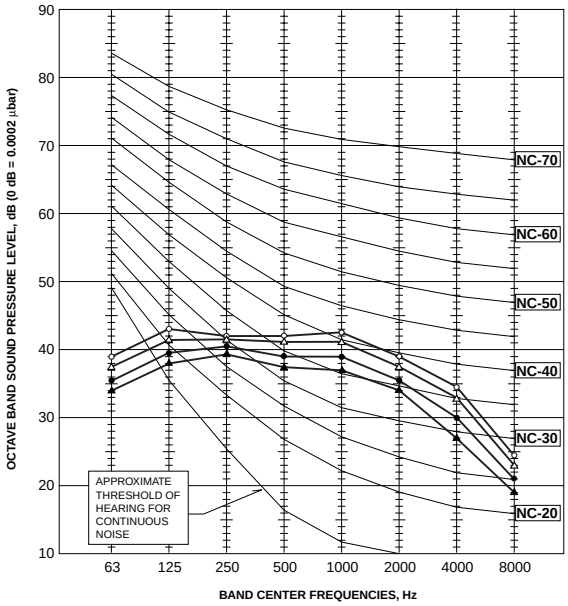

PCA-RP6GA

NOTCH	SPL(dB)	LINE
Hi	48	○——○
Mi1	46	△——△
Mi2	44	●——●
Lo	42	▲——▲

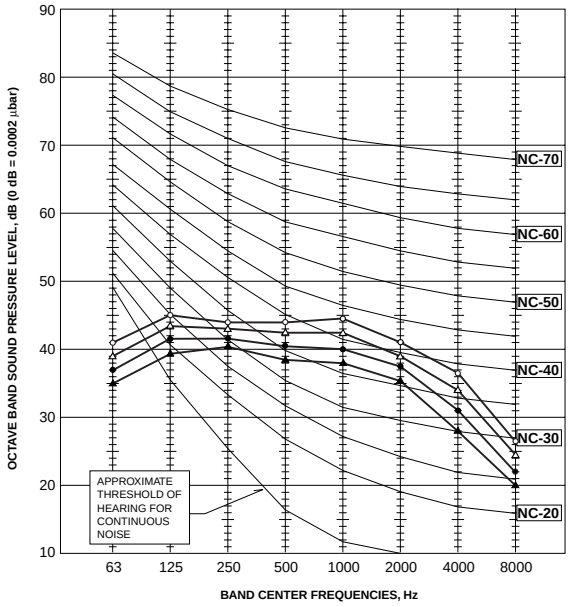

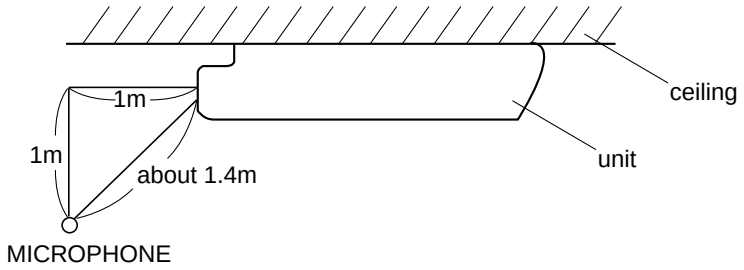

A.3.8 OUTLET AIR SPEED AND COVERAGE RANGE

		PCA-RP2GA	PCA-RP2.5GA	PCA-RP3GA	PCA-RP4GA	PCA-RP5GA	PCA-GP6GA
Air flow	m^3/min	13	18	18	25	34	34
Air speed	m/sec	3.7	3.8	3.8	4.1	4.4	4.4
Coverage range	m	8.8	10.4	10.4	12.6	15.2	15.2

A.3.9 TEMPERATURE AND AIR FLOW DISTRIBUTIONS

PCA-RP3GA

Temperature distribution

<Cooling mode>
Flow angle : 0°
Notch : Hi

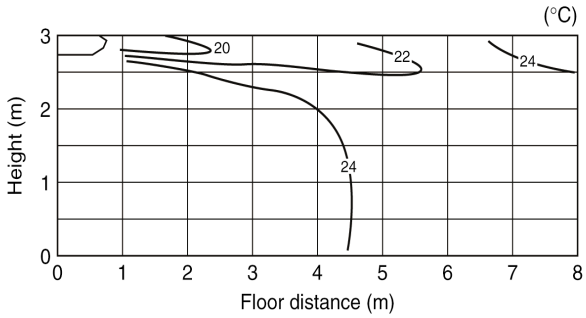

<Heating mode>
Flow angle : 60°
Notch : Hi

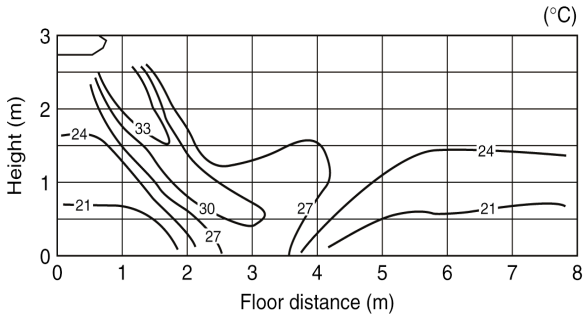

Air flow distribution

<Fan mode>
Flow angle : 0°
Notch : Hi

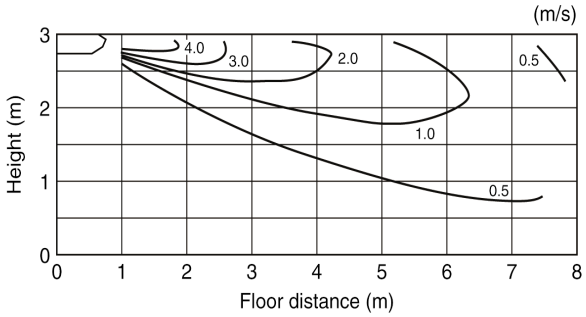

<Fan mode>
Flow angle : 60°
Notch : Hi

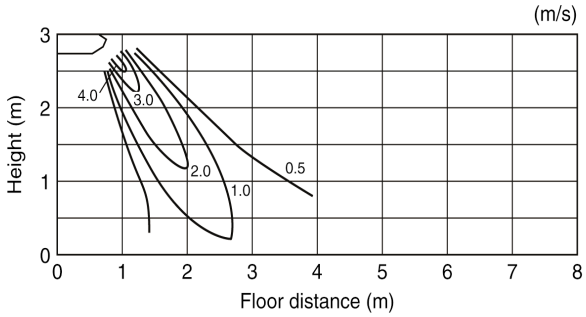

PCA-RP5GA

Temperature distribution

<Cooling mode>
Flow angle : 0°
Notch : Hi

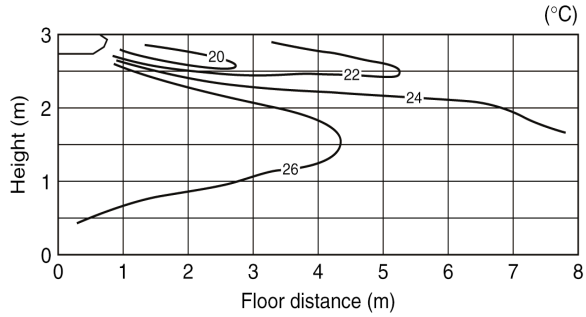

<Heating mode>
Flow angle : 60°
Notch : Hi

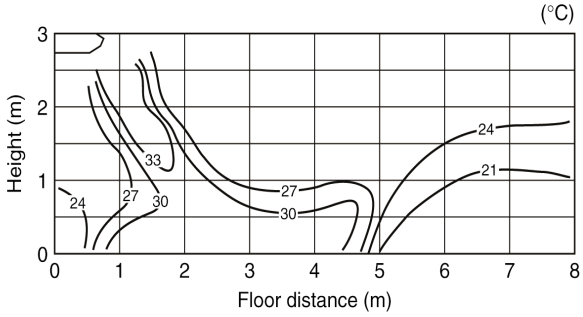

A.3.10 REMOTE CONTROLLER

Once the controls are set, the same operation mode can be repeated by simply pressing the ON/OFF button.

● Operation buttons

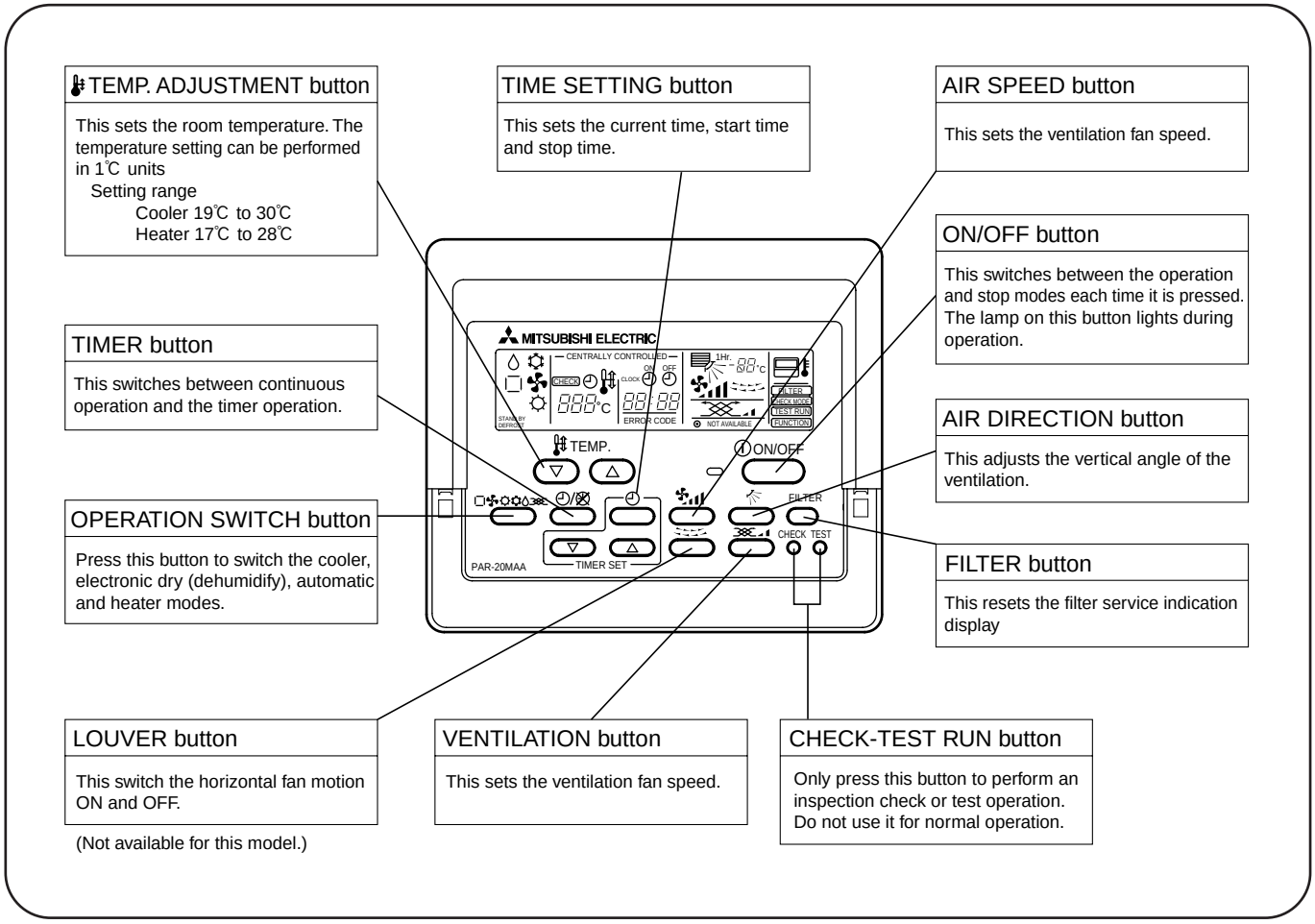

● Display

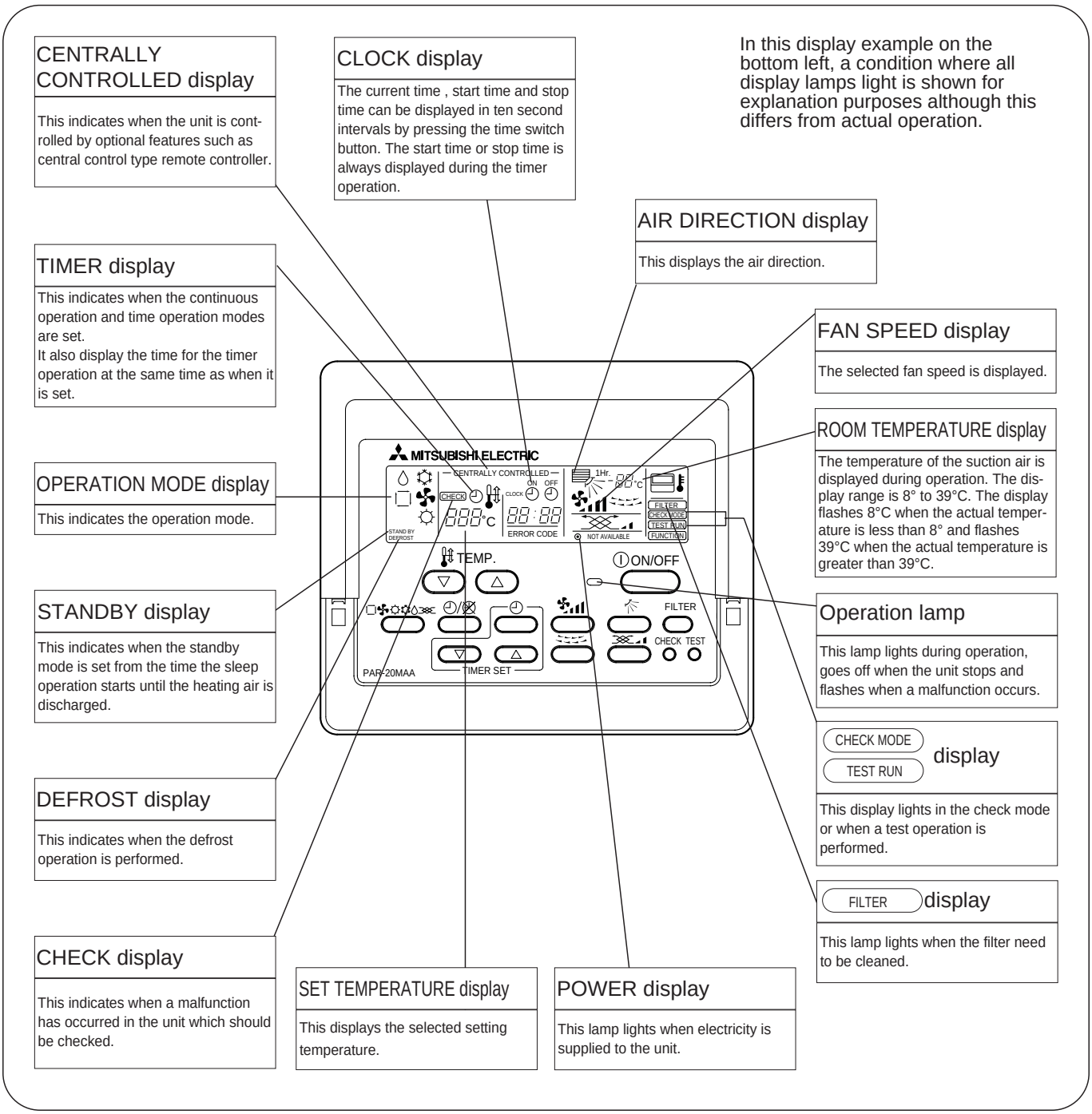

Caution

- Only the Power display lights when the unit is stopped and power supplied to the unit.
- When power is turned ON for the first time the (CENTRAL CTRL) display appears to go off momentarily but this is not a malfunction.
- When the central control remote control unit, which is sold separately, is used the ON-OFF button, operation switch button and TEMP. adjustment button do not operate.
- “NOT AVAILABLE” is displayed when the Air speed button is pressed.This indicates that this room unit is not equipped with the fan direction adjustment function and the louver function.
- When power is turned ON for the first time, it is normal that “H0” is displayed on the room temperature indication (For max. 2minutes). Please wait until this “H0” indication disappear then start the operation.

A.3.11 TROUBLESHOOTING

Before you call out a repair man, check the following table to see whether there is a simple solution to your problem.

[for wireless remote controller(option)]

Problem	Solution	Problem	Solution
Unit does not operate at all.	Turn main power on. Then press the POWER ON/OFF button to turn the unit on.	Unit does not start immediately.	Wait until the unit restarts automatically. The compressor may hesitate resuming because a three-minute resume prevention circuit is incorporated in the outdoor unit for protection of the compressor.
	Wait until power is restored, then press the POWER ON/OFF button to turn the unit on.		

[for wired remote controller]

Problem	Solution	Problem	Solution
Unit does not cool or heat very well.	Clean the filter.	CENTRALLY CONTROLLED is displayed in the remote controller.	The start and stop functions of the remote controller are not available when the CENTRALLY CONTROLLED message is lit.
The unit stops operating before arriving at the set temperature in the heating mode.	Frost forms when the outdoor temperature is low and humidity is high. Wait for about 10 minutes for the frost to melt.	The start and stop functions are not available just after restarting the unit.	Wait about three minutes (operation has stopped to prevent damage to the air conditioner).
The airflow direction suddenly changes.	After one hour of cooling-mode operation with the airflow in a downward direction, the unit will automatically change to the "Horizontal airflow" mode.	"H0" is displayed in the remote controller.	An automatic startup test is being performed (will last for about two minutes).
	When the unit is in the heating or defrosting mode, it will automatically change to the "Horizontal airflow mode".	An error code is displayed in the remote controller. The operating display of the wireless remote controller's receiver is flashing.	A self-diagnostic function is being performed to preserve the air conditioner. * Do not attempt to make repairs yourself. Turn the main switch off and contact the dealer from whom you bought the air conditioner. Provide him or her with the name of the unit and the information displayed in the remote controller.
A white mist is expelled from the indoor unit.	This may occur just after the unit is turned on when a high level of humidity is present in the room.		
The indicators of the remote controller do not light up when operated.	Turn on the power switch. " · " will be displayed.		

NOTE: After a power cut, the unit will not restart automatically. You will have to restart it by pressing the POWER - ON/OFF button on the remote controller.

If none of the above apply, turn the main switch off and contact the dealer from whom you bought the air-conditioner, telling him the model name and the nature of the problem. Do not try to fix the unit yourself.

In any of the following cases, turn off the main power switch and contact your local dealer for service:

- The operation lamp (on the main unit) flashes.
- The switches do not work properly.
- The circuit breaker trips frequently (or the fuse blows frequently).
- Water has accidentally been splashed into the unit.
- Water leaks from the unit.
- Something is accidentally dropped into the air-conditioner.
- An unusual noise is heard during operation.

Operating range

		Indoor air intake temperature	Outdoor air intake temperature
Cooling	Maximum	35 °C DB, 22.5 °C WB	46 °C DB
	Minimum	19 °C DB, 15 °C WB	–5 °C DB
Heating	Maximum	28 °C DB	21 °C DB, 15 °C WB
	Minimum	17 °C DB	–11 °C DB, –12 °C WB

The following do not indicate any malfunction:

Odours: smells such as tobacco or cosmetic odours may persist after they have been sucked into the unit.
Sound of liquid flowing inside indoor unit: this can occur during or after operation and is simply the sound of refrigerant being circulated inside the unit.
Ticking sound coming from indoor unit: this can occur when cooling or heating has just begun or has just stopped. It is caused by the indoor unit shrinking or expanding slightly due to the change in temperature.
The message "CENTRALLY CONTROLLED" appearing on the LCD panel: from time to time, this message may come up on the LCD panel. This does not indicate any malfunction.

Remote Controller Settings for Installing/Replacing Batteries and Restarting Operation (for wireless remote controller)

- Always press the reset button after installing or replacing batteries.
- The initial settings are used when installing or replacing batteries after which the settings for restarting are used.

	Initial Settings	Restarting		
Operating mode	Fan	Previous operating mode		
Temperature setting	—	Previous temperature setting		
Fan speed	High	Previous fan speed setting		
Airflow direction	Level	Operating mode	Cooling - Dry	Level
			Heating	Previous setting
			Fan	Level

NOTE: The refrigerant charged in the air conditioner is safe. Refrigerant normally does not leak, however, if refrigerant gas leaks indoors, and comes into contact with the fire of a fan heater, space heater, stove, etc., harmful substances will be generated.
Be sure to ask the service representative whether there is refrigerant leakage or not when repairs are carried out.

A.3.12 INSTALLATION PROCEDURE

1. Safety precautions

- ▶ **Before installing the unit, make sure you read all the "Safety precautions".**
- ▶ **Please report to your supply authority or obtain their consent before connecting this equipment to the power supply system.**

⚠ **Warning:**
Describes precautions that must be observed to prevent danger of injury or death to the user.

⚠ **Caution:**
Describes precautions that must be observed to prevent damage to the unit.

After installation work has been completed, explain the "Safety Precautions," use, and maintenance of the unit to the customer according to the information in the Operation Manual and perform the test run to ensure normal operation. Both the Installation Manual and Operation Manual must be given to the user for keeping. These manuals must be passed on to subsequent users.

⃠ : Indicates an action that must be avoided.
: Indicates that important instructions must be followed.
: Indicates a part which must be grounded.
: Indicates that caution should be taken with rotating parts.
: Indicates that the main switch must be turned off before servicing.
: Beware of electric shock.
: Beware of hot surface.
ELV: At servicing, please shut down the power supply for both the Indoor and Outdoor Unit.

⚠ **Warning:**
Carefully read the labels affixed to the main unit.

⚠ **Warning:**
- **Ask a dealer or an authorized technician to install the unit.**
- **For installation work, follow the instructions in the Installation Manual and use tools and pipe components specifically made for use with refrigerant specified in the outdoor unit installation manual.**
- **The unit must be installed according to the instructions in order to minimize the risk of damage from earthquakes, typhoons, or strong winds. An incorrectly installed unit may fall down and cause damage or injuries.**
- **The unit must be securely installed on a structure that can sustain its weight.**
- **If the air conditioner is installed in a small room, measures must be taken to prevent the refrigerant concentration in the room from exceeding the safety limit in the event of refrigerant leakage. Should the refrigerant leak and cause the concentration limit to be exceeded, hazards due to lack of oxygen in the room may result.**
- **Ventilate the room if refrigerant leaks during operation. If refrigerant comes into contact with a flame, poisonous gases will be released.**
- **All electric work must be performed by a qualified technician according to local regulations and the instructions given in this manual.**
- **Use only specified cables for wiring.**
- **The terminal block cover panel of the unit must be firmly attached.**
- **Use only accessories authorized by Mitsubishi Electric and ask a dealer or an authorized technician to install them.**
- **The user should never attempt to repair the unit or transfer it to another location.**
- **After installation has been completed, check for refrigerant leaks. If refrigerant leaks into the room and comes into contact with the flame of a heater or portable cooking range, poisonous gases will be released.**

1.1. Before installation (Environment)

⚠ **Caution:**
- **Do not use the unit in an unusual environment. If the air conditioner is installed in areas exposed to steam, volatile oil (including machine oil), or sulfuric gas, areas exposed to high salt content such as the seaside, the performance can be significantly reduced and the internal parts can be damaged.**
- **Do not install the unit where combustible gases may leak, be produced, flow, or accumulate. If combustible gas accumulates around the unit, fire or explosion may result.**
- **Do not keep food, plants, caged pets, artwork, or precision instruments in the direct airflow of the indoor unit or too close to the unit, as these items can be damaged by temperature changes or dripping water.**
- **When the room humidity exceeds 80% or when the drainpipe is clogged, water may drip from the indoor unit. Do not install the indoor unit where such dripping can cause damage.**
- **When installing the unit in a hospital or communications office, be prepared for noise and electronic interference. Inverters, home appliances, high-frequency medical equipment, and radio communications equipment can cause the air conditioner to malfunction or breakdown. The air conditioner may also affect medical equipment, disturbing medical care, and communications equipment, harming the screen display quality.**

1.2. Before installation or relocation

⚠ **Caution:**
- **Be extremely careful when transporting the units. Two or more persons are needed to handle the unit, as it weighs 20 kg or more. Do not grasp the packaging bands. Wear protective gloves as you can injure your hands on the fins or other parts.**
- **Be sure to safely dispose of the packaging materials. Packaging materials, such as nails and other metal or wooden parts may cause stabs or other injuries.**
- **Thermal insulation of the refrigerant pipe is necessary to prevent condensation. If the refrigerant pipe is not properly insulated, condensation will be formed.**
- **Place thermal insulation on the pipes to prevent condensation. If the drainpipe is installed incorrectly, water leakage and damage to the ceiling, floor, furniture, or other possessions may result.**
- **Do not clean the air conditioner unit with water. Electric shock may result.**
- **Tighten all flare nuts to specification using a torque wrench. If tightened too much, the flare nut can break after an extended period.**

1.3. Before electric work

⚠ **Caution:**
- **Be sure to install circuit breakers. If not installed, electric shock may result.**
- **For the power lines, use standard cables of sufficient capacity. Otherwise, a short circuit, overheating, or fire may result.**
- **When installing the power lines, do not apply tension to the cables.**
- **Be sure to ground the unit. If the unit is not properly grounded, electric shock may result.**
- **Use circuit breakers (ground fault interrupter, isolating switch (+B fuse), and molded case circuit breaker) with the specified capacity. If the circuit breaker capacity is larger than the specified capacity, breakdown or fire may result.**

1.4. Before starting the test run

⚠ **Caution:**
- **Turn on the main power switch more than 12 hours before starting operation. Starting operation just after turning on the power switch can severely damage the internal parts.**
- **Before starting operation, check that all panels, guards and other protective parts are correctly installed. Rotating, hot, or high voltage parts can cause injuries.**
- **Do not operate the air conditioner without the air filter set in place. If the air filter is not installed, dust may accumulate and breakdown may result.**
- **Do not touch any switch with wet hands. Electric shock may result.**
- **Do not touch the refrigerant pipes with bare hands during operation.**
- **After stopping operation, be sure to wait at least five minutes before turning off the main power switch. Otherwise, water leakage or breakdown may result.**

2. Installation location

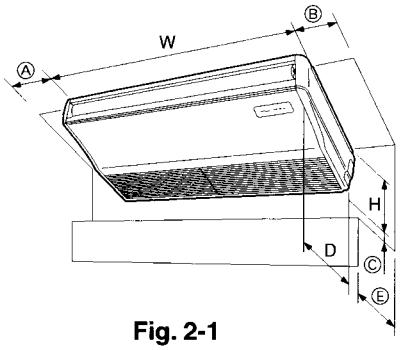

Fig. 2-1

2.1. Outline dimensions (Indoor unit) (Fig. 2-1)

Select a proper position allowing the following clearances for installation and maintenance.

(mm)

Models	W	D	H	Ⓐ	Ⓑ	Ⓒ	Ⓔ
RP2	1000	680	221	Min. 270	Min. 300	Min. 500	Max. 250
RP2.5, 3	1310	680	221	Min. 270	Min. 300	Min. 500	Max. 250
RP4	1310	680	281	Min. 270	Min. 300	Min. 500	Max. 250
RP5, 6	1620	680	281	Min. 270	Min. 300	Min. 500	Max. 250

⚠ **Warning:**
Mount the indoor unit on a ceiling strong enough to withstand the weight of the unit.

2.2. Outline dimensions (Outdoor unit)

Refer to the outdoor unit installation manual.

3. Installing the indoor unit

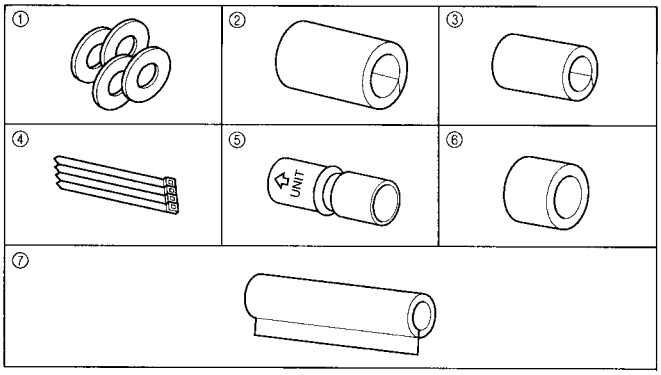

Fig. 3-1

3.1. Check the indoor unit accessories (Fig. 3-1)

The indoor unit should be supplied with the following accessories (contained in the inside of the intake grille).

	Accessory name	Q'ty
①	Washer	4 pcs
②	Pipe cover	1 pc Large size (For gas tubing)
③	Pipe cover	1 pc Small size (For liquid tubing)
④	Band	4 pcs
⑤	Joint socket	1 pc Marked with "UNIT"
⑥	Socket cover	1 pc
⑦	Drain tubing cover	1 pc

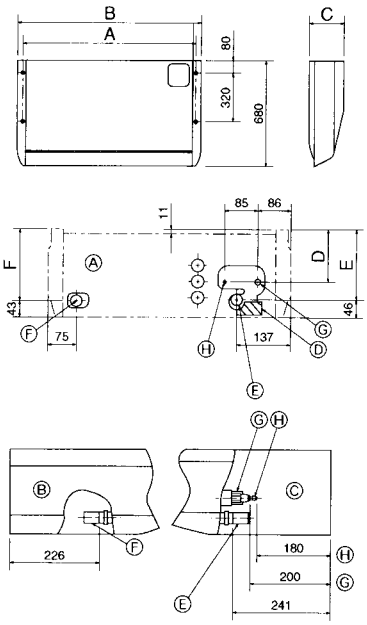

Fig. 3-2

3.2. Preparation for installation (Fig. 3-2)

3.2.1. Suspension bolt installing spacing

(mm)

Models	A	B	C
RP2	933	1000	221
RP2.5, 3	1240	1310	221
RP4	1240	1310	281
RP5, 6	1547	1620	281

3.2.2. Refrigerant and drain tubing location

(mm)

Models	D	E	F	G	H	J	K	L
RP2, 2.5, 3	131	175	178	90	82	159	156	90
RP4, 5, 6	191	235	238	150	142	219	216	150

Ⓐ Front side outlet
Ⓑ Left side outlet
Ⓒ Right side outlet
Ⓓ Independent piece (Removable)
Ⓔ Right drain tubing
Ⓕ Left drain tubing
Ⓖ Gas tubing
Ⓗ Liquid tubing

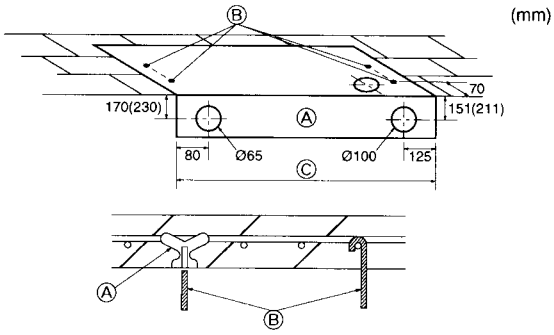

Fig. 3-3

3.2.3. Selection of suspension bolts and tubing positions (Fig. 3-3)

Using the pattern paper provided for installation, select proper positions for suspension bolts and tubing and prepare relative holes.

Ⓐ Pattern paper
Ⓑ Suspension bolt hole
Ⓒ Indoor unit width

Secure the suspension bolts or use angle stock braces or square timbers for bolt installation.

Ⓐ Use inserts of 100 kg to 150 kg each.
Ⓑ Use suspension bolts of W3/8 or M10 in size

3. Installing the indoor unit

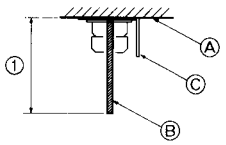

Fig. 3-4

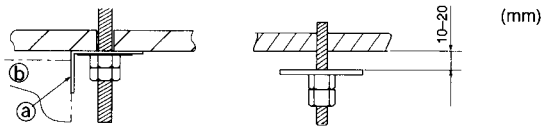

Fig. 3-5

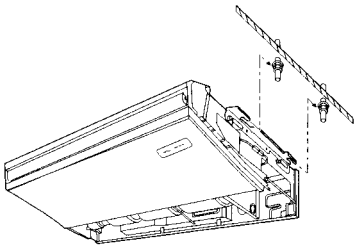

Fig. 3-6

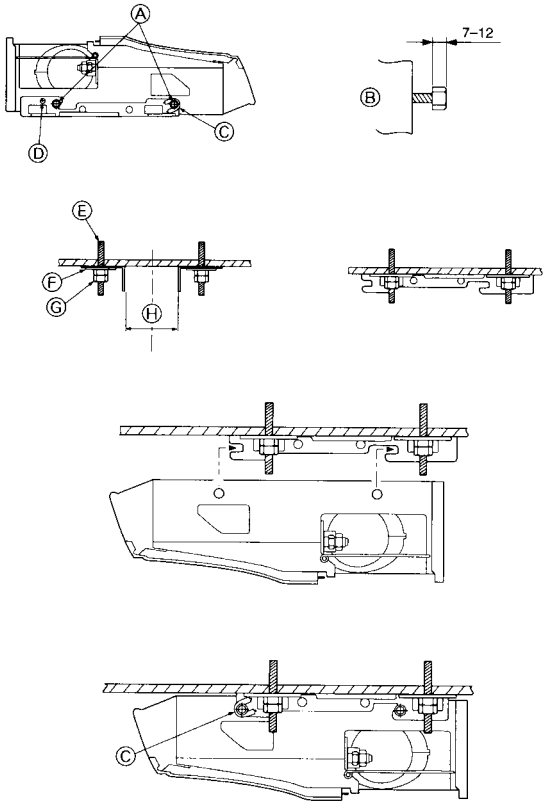

Fig. 3-7

3.2.4. Indoor unit preparation (Fig. 3-4)

1. Install the suspending bolts. (Procure the W3/8 or M10 bolts locally.)
Predetermine the length from the ceiling (① within 100 mm).
   Ⓐ Ceiling surface
   Ⓑ Suspending bolt
   Ⓒ Suspending bracket
2. Remove the intake grille.
Slide the intake grille holding knobs (at two locations) backward to open the intake grille.
3. Remove the side panel.
Remove the side panel holding screws (one in each side, right and left) then slide the side panel forward for removal.

3.3. Installing the indoor unit

Use a proper suspending method depending on the presence or absence of ceiling materials as follows. (Fig. 3-5)
In the absence of ceiling materials
   ⓐ Suspending bracket
   ⓑ Unit

1) Directly suspending the unit (Fig. 3-6)

Installing procedures
1. Install the washer ① (supplied with the unit) and the nut (to be locally procured).
2. Set (hook) the unit through the suspending bolts.
3. Tighten the nuts.

Check the unit installing condition.
- Check that the unit is horizontal between the right and left sides.
- Check that the unit slopes continuously downward from the front to the rear.

When embedding pipes, into the wall

2) Installing the suspending bracket first onto the ceiling (Fig. 3-7)

Installing procedures
1. Remove the suspending brackets, U-shaped washers, and suspending bracket holding screws from the unit.
2. Adjust the suspending bracket holding bolts on the unit.
3. Attach the suspending brackets to the suspending bolts.
4. Set (hook) the unit to the suspending brackets.

* Be sure to install the U-shaped washers.
   Ⓐ Bolt
   Ⓑ Unit
   Ⓒ Washer
   Ⓓ Suspending bracket holding screw
   Ⓔ Bolt
   Ⓕ Washer ①
   Ⓖ Double nuts

(mm)

Ⓗ	RP2	900 - 905
	RP2.5, 3, 4	1207 - 1212
	RP5, 6	1514 - 1519

4. Installing the refrigerant piping

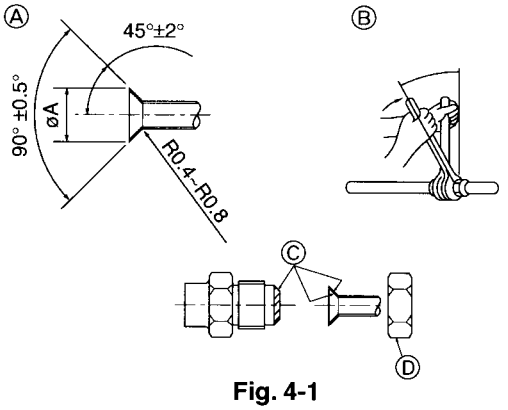

Fig. 4-1

Ⓐ Flare cutting dimensions

Copper pipe O.D. (mm)	Flare dimensions øA dimensions (mm)
ø6.35	8.7 - 9.1
ø9.52	12.8 - 13.2
ø12.7	16.2 - 16.6
ø15.88	19.3 - 19.7
ø19.05	23.6 - 24.0

4.1. Connecting pipes (Fig. 4-1)

- When commercially available copper pipes are used, wrap liquid and gas pipes with commercially available insulation materials (heat-resistant to 100 °C or more, thickness of 12 mm or more).
- The indoor parts of the drain pipe should be wrapped with polyethylene foam insulation materials (specific gravity of 0.03, thickness of 9 mm or more).
- Apply thin layer of refrigerant oil to pipe and joint seating surface before tightening flare nut.
- Use two wrenches to tighten piping connections.
- Use refrigerant piping insulation provided to insulate indoor unit connections. Insulate carefully.

Ⓑ Flare nut tightening torque

Copper pipe O.D. (mm)	Flare nut O.D. (mm)	Tightening torque (N·m)
ø6.35	17	14 - 18
ø6.35	22	34 - 42
ø9.52	22	34 - 42
ø12.7	26	49 - 61
ø12.7	29	68 - 82
ø15.88	29	68 - 82
ø15.88	36	100 - 120
ø19.05	36	100 - 120

Ⓒ Apply refrigerating machine oil over the entire flare seat surface.

Ⓓ Use the flare nuts as follows.

Indoor unit		RP1.6, 2	RP2.5, 3	RP4-6
Refrigerant		R407C		
Joint outdoor unit		PU(H)-P1.6/2	PU(H)-P2.5/3	PU(H)-P4/5/6
Gas side	Pipe size (mm)	ø15.88	ø15.88	ø19.05
	Indoor nut	*1	*1	*1
	Outdoor nut	*1	*1	*1
Liquid side	Pipe size (mm)	ø9.52	ø9.52	ø9.52
	Indoor nut	*1	*1	*1
	Outdoor nut	*1	*1	*1

Indoor unit		RP1.6, 2	RP2.5, 3	RP4-6
Refrigerant		R410A		
Joint outdoor unit		PUHZ-RP1.6/2	PUHZ-RP2.5/3	PUHZ-RP4/5/6
Gas side	Pipe size (mm)	ø12.7	ø15.88	ø15.88
	Indoor nut	*2	*1	*2
	Outdoor nut	*1	*1	*1
Liquid side	Pipe size (mm)	ø6.35	ø9.52	ø9.52
	Indoor nut	*2	*1	*1
	Outdoor nut	*1	*1	*1

*1: The flare nut is attached to its pipe.

*2: The flare nut is in the outdoor unit accessory.
Do not use the flare nut attached. If it is used, a gas leakage or even a pipe extraction may occur.

Refer to the outdoor unit installation manual for the specification of connecting pipes.

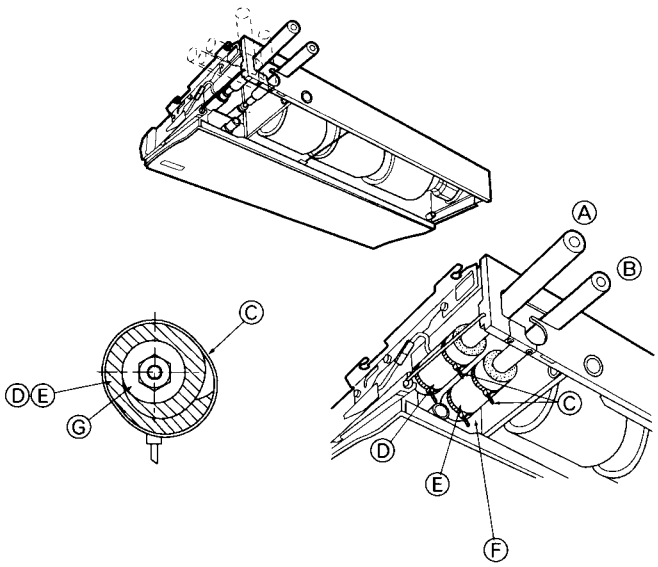

Fig. 4-2

4.2. Indoor unit (Fig. 4-2)

Installing procedures

1. Slide the supplied pipe cover ② over the gas tubing until it is pressed against the sheet metal inside the unit.
2. Slide the provided pipe cover ③ over the liquid tubing until it is pressed against the sheet metal inside the unit.
3. Tighten the pipe covers ② and ③ at the both ends (15 - 20 mm) with the supplied bands ④.

Ⓐ Gas tubing
Ⓑ Liquid tubing
Ⓒ Band ④
Ⓓ Pipe cover ②
Ⓔ Pipe cover ③
Ⓕ Press the pipe cover against the sheet metal.
Ⓖ Refrigerant tubing heat insulating material

4.3. For twin/triple combination

Refer to the outdoor unit installation manual.

5. Drainage piping work

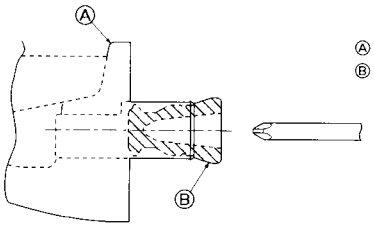

Ⓐ Drain pan
Ⓑ Plug

Fig. 5-1

5.1. Preparation for left side tubing installation (Fig. 5-1)

- For left side tubing, be sure to insert the rubber plug into the right drain port.
- Install the drain tubing as it slopes continuously downward.
- After completion of work, check that correct drain is available from the outflow port of the drain tubing.

5. Drainage piping work

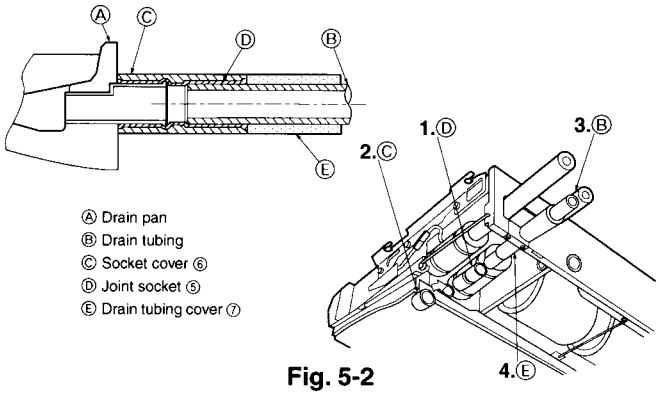

Fig. 5-2

Installing procedures (Fig. 5-2)

1. Attach the joint socket ⑤ supplied with the unit to the drain port on the unit with a vinyl chloride adhesive.
2. Fasten the socket cover ⑥ supplied with the unit to the joint socket ⑤.
3. Attach the field drain tubing (VP20) to the joint socket ⑤ with a vinyl chloride adhesive.
4. Wrap the drain tubing cover ⑦ supplied with the unit. (Seam taping)

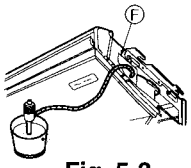

Ⓕ Drain tubing sensor

Fig. 5-3

5. Check for correct drainage. (Fig. 5-3)
   * Fill the drain pan with water of about 1 L from the tubing sensor access port.
   * After checking for correct drainage, replace the tubing sensor access port cover.

6. Electrical work

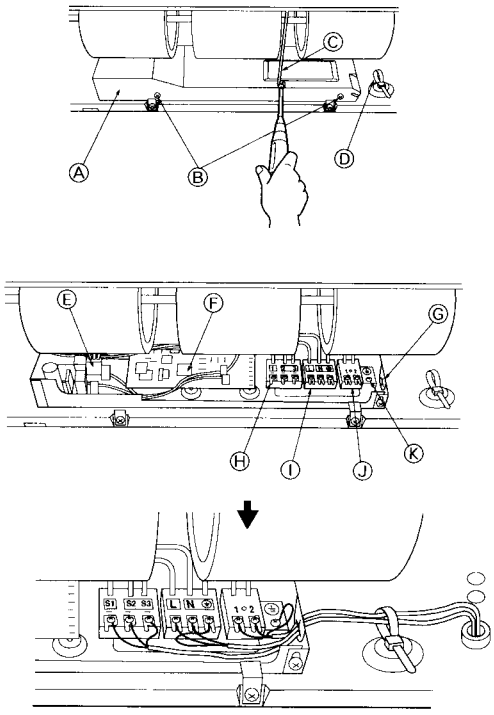

Fig. 6-1

6-1. Electric wiring (Fig. 6-1)

Wiring procedures

1. Remove the (two) tapping screws then remove the electric part cover.
2. Connect the electric wires securely to the corresponding terminals.
3. Replace the removed parts.
4. Tie the electric wires with the local wiring clamp located in the right side of the junction box.

Ⓐ Cover
Ⓑ Set screws
Ⓒ Beam
Ⓓ Wiring clamp
Ⓔ Power supply board
Ⓕ Control board
Ⓖ Wire service entrance
Ⓗ Terminal block for indoor and outdoor units connection
Ⓘ Terminal block for electric heater power supply (for only PCH models)
Ⓙ Terminal block for remote controller
Ⓚ Grounding cable connector

Indoor unit model			PCA	PCH
Indoor unit power supply (Heater)			–	~/N (single), 50Hz, 220-230-240V
Indoor unit input capacity (Heater) Main switch (Breaker)		*1	–	16A
Wiring Wire No. × size (mm²)	Indoor unit power supply (Heater)		–	2 × Min. 1.5
	Indoor unit power supply (Heater) earth		–	1 × Min. 1.5
	Indoor unit-Outdoor unit		3 × 2.5 (Polar)	3 × 2.5 (Polar)
	Indoor unit-Outdoor unit earth		1 × Min. 2.5	1 × Min. 2.5
	Remote controller-Indoor unit	*2	2 × 0.69 (Non-polar)	2 × 0.69 (Non-polar)
Circuit rating	Indoor unit (Heater) L-N	*3	–	AC 220-230-240V
	Indoor unit-Outdoor unit S1-S2	*3	AC 220-230-240V	AC 220-230-240V
	Indoor unit-Outdoor unit S2-S3	*3	DC24V	DC24V
	Remote controller-Indoor unit	*3	DC14V	DC14V

*1. A breaker with at least 3 mm contact separation in each pole shall be provided. Use non-fuse breaker (NF) or earth leakage breaker (NV).
*2. A 10 m wire is attached in the remote controller accessory.
*3. The figures are NOT always against the ground.
S3 terminal has DC 24 V against S2 terminal. However between S3 and S1, these terminals are not electrically insulataed by the transformer or other device.

Notes: 1. Wiring size must comply with the applicable local and national code.
2. Power supply cords and Indoor unit/Outdoor unit connecting cords shall not be lighter than polychloroprene sheathed flexible cord. (Design 245 IEC 57)
3. Install an earth longer and thicker than other cables.

6. Electrical work

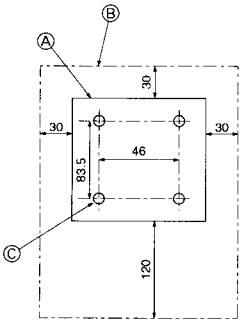

Fig. 6-2

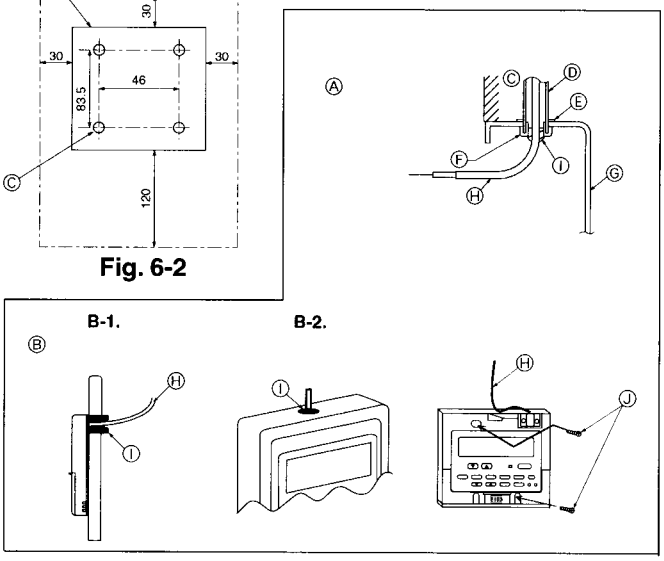

Fig. 6-3

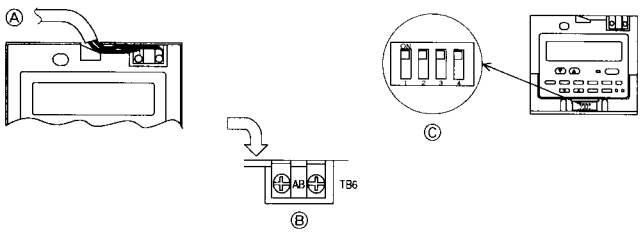

Fig. 6-4

6.2. Remote controller

6.2.1. For wired remote controller

1) Installing procedures

(1) Select an installing position for the remote controller. (Fig. 6-2)
The temperature sensors are located on both remote controller and indoor unit.

▶ **Procure the following parts locally:**
Two piece switch box
Thin copper conduit tube
Lock nuts and bushings
Ⓐ Remote controller profile
Ⓑ Required clearances surrounding the remote controller
Ⓒ Installation pitch

(2) Seal the service entrance for the remote controller cord with putty to prevent possible invasion of dew drops, water, cockroaches or worms. (Fig. 6-3)
Ⓐ For installation in the switch box:
Ⓑ For direct installation on the wall select one of the following:
- Prepare a hole through the wall to pass the remote controller cord (in order to run the remote controller cord from the back), then seal the hole with putty.
- Run the remote controller cord through the cut-out upper case, then seal the cut-out notch with putty similarly as above.

B-1. To lead the remote controller cord from the back of the controller:
B-2. To run the remote controller cord through the upper portion:

(3) For direct installation on the wall
Ⓒ Wall
Ⓓ Conduit
Ⓔ Lock nut
Ⓕ Bushing
Ⓖ Switch box
Ⓗ Remote controller cord
Ⓘ Seal with putty
Ⓙ Wood screw

2) Connecting procedures (Fig. 6-4)

① Connect the remote controller cord to the terminal block.
Ⓐ To TB5 on the indoor unit
Ⓑ TB6 (No polarity)
② Set the dip switch No.1 shown below when using two remote controller's for the same group.
Ⓒ Dip switches

Setting the dip switches

The dip switches are at the bottom of the remote controller. Remote controller Main/Sub and other function settings are performed using these switches. Ordinarily, only change the Main/Sub setting of SW No.1. (The factory settings are all "ON".)

<SW No. 1>

SW contents Main	Remote controller Main/Sub setting
ON/OFF	Main/Sub
Comment	Set one of the two remote controllers at one group to "Main"

<SW No. 2>

SW contents Main	When remote controller power turned on
ON/OFF	Normally on/Timer mode on
Comment	When you want to return to the timer mode when the power is restored after a power failure when a Program timer is connected, select "Timer mode".

<SW No. 3>

SW contents Main	Cooling/heating display in AUTO mode
ON/OFF	Yes/No
Comment	When you do not want to display "Cooling" and "Heating" in the Auto mode, set to "No".

<SW No. 4>

SW contents Main	Intake temperature display
ON/OFF	Yes/No
Comment	When you do not want to display the intake temperature, set to "No".

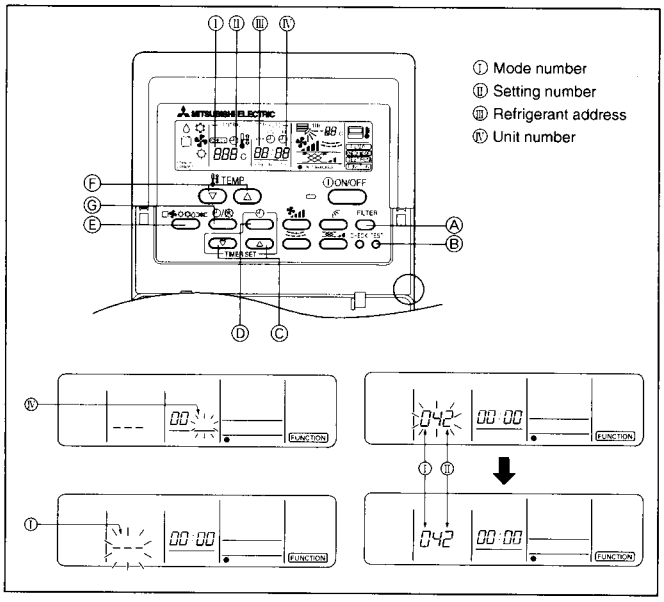

Fig. 6-5

6.3. Function settings

6.3.1. For wired remote controller (Fig. 6-5)

Changing the power voltage setting
- Be sure to change the power voltage setting depending on the voltage used.

① Go to the function setting mode.
Switch OFF the remote controller.
Press the Ⓐ and Ⓑ buttons simultaneously and hold them for at least 2 seconds. FUNCTION will start to flash.
② Use the Ⓒ button to set the refrigerant address (Ⅲ) to 00.
③ Press Ⓓ and [--] will start to flash in the unit number (Ⅳ) display.
④ Use the Ⓒ button to set the unit number (Ⅳ) to 00.
⑤ Press the Ⓔ MODE button to designate the refrigerant address/unit number. [--] will flash in the mode number (Ⅰ) display momentarily.
⑥ Press the Ⓕ buttons to set the mode number (Ⅰ) to 04.
⑦ Press the Ⓖ button and the current set setting number (Ⅱ) will flash.
Use the Ⓕ button to switch the setting number in response to the power supply voltage to be used.
Power supply voltage
240 V : Setting number = 1
220 V, 230 V : Setting number = 2
⑧ Press the MODE button Ⓔ and mode and the setting number (Ⅰ) and (Ⅱ) will change to being on constantly and the contents of the setting can be confirmed.
⑨ Press the FILTER Ⓐ and TEST RUN Ⓑ buttons simultaneously for at least two seconds. The function selection screen will disappear momentarily and the air conditioner OFF display will appear.

6. Electrical work

Function table

Select unit number 00

Mode	Settings	Mode no.	Setting no.	Initial setting	Setting
Power failure automatic recovery	Not available	01	1	○	
	Available		2		
Indoor temperature detecting	Indoor unit operating average	02	1	○	
	Set by indoor unit's remote controller		2		
	Remote controller's internal sensor		3		
LOSSNAY connectivity	Not Supported	03	1	○	
	Supported (indoor unit is not equipped with outdoor-air intake)		2		
	Supported (indoor unit is equipped with outdoor-air intake)		3		
Power voltage	240 V	04	1		
	220 V, 230 V		2	○	
Auto mode (only for PUHZ)	Energy saving cycle automatically enabled	05	1	○	
	Energy saving cycle automatically disabled		2		

Select unit numbers 01 to 03 or all units (AL [wired remote controller]/07 [wireless remote controller])

Mode	Settings	Mode no.	Setting no.	Initial setting	Setting
Filter sign	100 Hr	07	1		
	2500 Hr		2	○	
	No filter sign indicator		3		
Fan speed	Standard (PLH/PLA)/Silent (PCH/PCA)	08	1		
	High ceiling ① (PLH/PLA)/Standard (PCH/PCA)		2	○	
	High ceiling ② (PLH/PLA)/High ceiling (PCH/PCA)		3		
No. of air outlets	4 directions	09	1	—	
	3 directions		2	—	
	2 directions		3	—	
Installed options (high-performance filter)	Not supported	10	1	○	
	Supported		2		
Up/down vane setting	No vanes	11	1		
	Equipped with vanes (vanes angle setup ①)		2	○	
	Equipped with vanes (vanes angle setup ②)		3		
Energy saving air flow (Heating mode)	Disabled	12	1	○	
	Enabled		2		

7. Test run

7.1. Before test run

- **After completing installation and the wiring and piping of the indoor and outdoor units, check for refrigerant leakage, looseness in the power supply or control wiring, wrong polarity, and no disconnection of one phase in the supply.**
- **Use a 500-volt megohmmeter to check that the resistance between the power supply terminals and ground is at least 1.0 MΩ.**
- **Do not carry out this test on the control wiring (low voltage circuit) terminals.**

⚠ **Warning:**

Do not use the air conditioner if the insulation resistance is less than 1.0 MΩ.

Insulation resistance

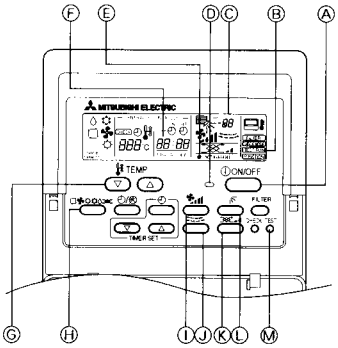

Fig. 7-1

7.2. Test run

The following 3 methods are available.

7.2.1. Using wired remote controller (Fig. 7-1)

① Turn on the power at least 12 hours before the test run.
② Press the [TEST] button twice. ➡ "TEST RUN" liquid crystal display
③ Press the [Mode selection] button. ➡ Make sure that wind is blown out.
④ Press the [Mode selection] button and switch to the cooling (or heating) mode.
➡ Make sure that cold (or warm) wind is blown out.
⑤ Press the [Fan speed] button. ➡ Make sure that the wind speed is switched.
⑥ Switch the wind direction by pressing the [Airflow] or [Louver] button.
➡ Make sure that horizontal outlet, downward outlet, and other wind direction adjustments are possible.
➡ Check operation of the outdoor unit fan.
⑦ Release test run by pressing the [ON/OFF] button. ➡ Stop
⑧ After the checks, always turn off the power.

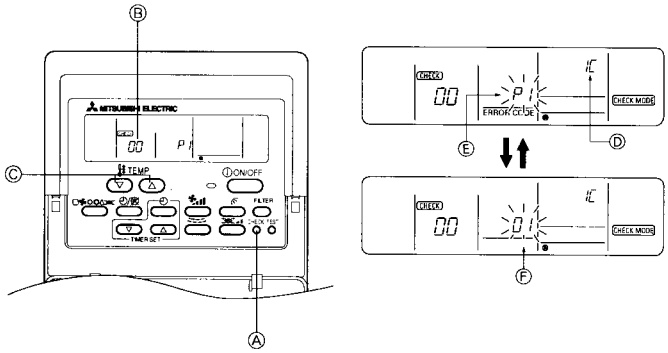

Fig. 7-2

7.2.2. Using SW4 in outdoor unit

Refer to the outdoor unit installation manual.

7.3. Self-check

7.3.1. Wired remote controller (Fig. 7-2)

① Turn on the power.
② Press the [CHECK] button twice.
③ Set refrigerant address with [TEMP] button if system control is used.
④ Press the [ON/OFF] button to stop the self-check.

Ⓐ CHECK button
Ⓑ Refrigerant address
Ⓒ TEMP. button
Ⓓ IC: Indoor unit
OC: Outdoor unit
Ⓔ Check code
Ⓕ Unit address

7. Test run

• For description of each check code, refer to the following table.

① Check code	Symptom	② Buzzer sound	③ OPE LED
P1	Intake sensor error	Single beep × 1	Lit for 1 sec. × 1
P2	Pipe sensor error	Single beep × 2	Lit for 1 sec. × 2
P4	Drain sensor error	Single beep × 4	Lit for 1 sec. × 4
P5	Drain pump error	Single beep × 5	Lit for 1 sec. × 5
P6	Freezing/Overheating safeguard operation	Single beep × 6	Lit for 1 sec. × 6
P8	Pipe temperature error	Single beep × 8	Lit for 1 sec. × 8
P9	TH5 sensor error	Single beep × 2	Lit for 1 sec. × 2
U0–UP	Outdoor unit error	Double beep × 1	Lit for 0.4 sec. + 0.4 sec. × 1
F1–FA	Outdoor unit error	Double beep × 1	Lit for 0.4 sec. + 0.4 sec. × 1
E0–E5	Signal error between remote controller and indoor units	Sounds other than above	Lights other than above
E6–EF	Communication error between indoor and outdoor units	Sounds other than above	Lights other than above
– –	No alarm history	No sound	Not lit
F F F F	No unit	Triple beep	Not lit

• On wireless remote controller
② The continuous buzzer sounds from receiving section of indoor unit.
③ Blink of operation lamp
• On wired remote controller
① Check code displayed in the LCD.

• If the unit cannot be operated properly after the above test run has been performed, refer to the following table to remove the cause.

Symptom			Cause
Wired remote controller		LED 1, 2 (PCB in outdoor unit)	
H0	For about 2 minutes following power-on	After LED 1, 2 are lighted, LED 2 is turned off, then only LED 1 is lighted. (Correct operation)	• For about 2 minutes following power-on, operation of the remote controller is not possible due to system start-up. (Correct operation)
H0 → Error code	After about 2 minutes has expired following power-on	Only LED 1 is lighted. → LED 1, 2 blink.	• Connector for the outdoor unit's protection device is not connected. • Reverse or open phase wiring for the outdoor unit's power terminal block (L1, L2, L3)
Display messages do not appear even when operation switch is turned ON (operation lamp does not light up).		Only LED 1 is lighted. → LED 1 blinks twice, LED 2 blinks once.	• Incorrect wiring between indoor and outdoor units (incorrect polarity of S1, S2, S3) • Remote controller wire short

On the wireless remote controller with condition above, following phenomena takes place.
• No signals from the remote controller are accepted.
• OPE lamp is blinking.
• The buzzer makes a short piping sound.

Note:
Operation is not possible for about 30 seconds after cancellation of function selection. (Correct operation)

For description of each LED (LED1, 2, 3) provided on the indoor controller, refer to the following table.

LED1 (power for microcomputer)	Indicates whether control power is supplied. Make sure that this LED is always lit.
LED2 (power for remote controller)	Indicates whether power is supplied to the remote controller. This LED lights only in the case of the indoor unit which is connected to the outdoor unit refrigerant address "0".
LED3 (communication between indoor and outdoor units)	Indicates state of communication between the indoor and outdoor units. Make sure that this LED is always blinking.

A.3.13 SAFETY DEVICE SETTING

PCA-RP2GA / PCA-RP2.5GA / PCA-RP3GA
PCA-RP4GA / PCA-RP5GA / PCA-RP6GA

Model / Safety device	PCA-RP2GA	PCA-RP2.5GA	PCA-RP3GA	PCA-RP4GA	PCA-RP5GA	PCA-RP6GA
Fan motor themal protector	OFF 130±5℃ ON 80±20℃					