Back to Index page

A.2 WALL-MOUNTED (PKA)

A.2.1 FEATURES A-60
A.2.2 SPECIFICATIONS A-61
A.2.3 OUTLINES AND DIMENSIONS A-64
A.2.4 WIRING DIAGRAM A-67
A.2.5 REFRIGERANT SYSTEM DIAGRAM A-69
A.2.6 PERFORMANCE DATA A-70
A.2.6.1 PERFORMANCE DATA A-70
A.2.6.2 PERFORMANCE CURVES A-80
A.2.7 NOISE CRITERIA CURVES A-81
A.2.8 OUTLET AIR SPEED AND COVERAGE RANGE A-82
A.2.9 TEMPERATURE AND AIR FLOW DISTRIBUTIONS A-83
A.2.10 REMOTE CONTROLLER A-84
A.2.11 TROUBLESHOOTING A-85
A.2.12 INSTALLATION PROCEDURE A-86
A.2.13 SAFETY DEVICE SETTINGS A-101

A.2.1 FEATURES

● PKA-RP•GAL

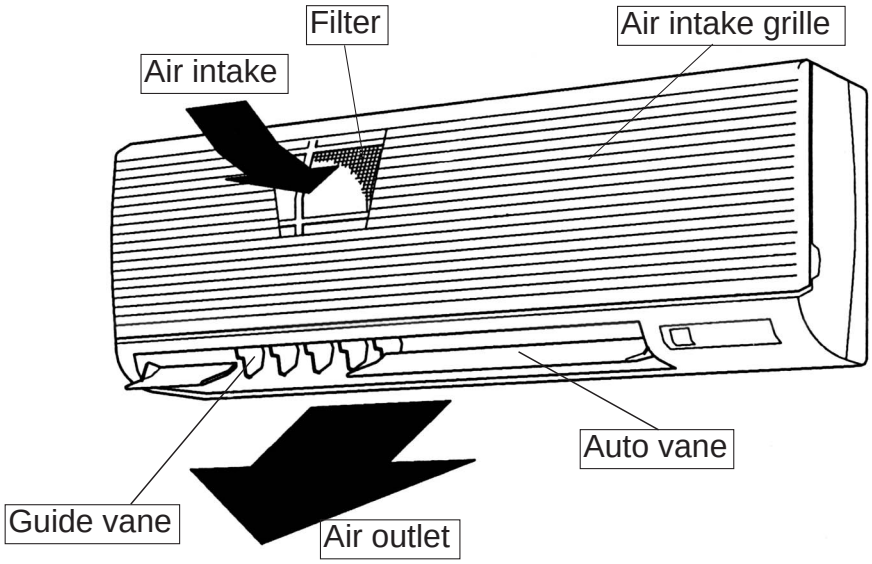

● PKA-RP•FAL

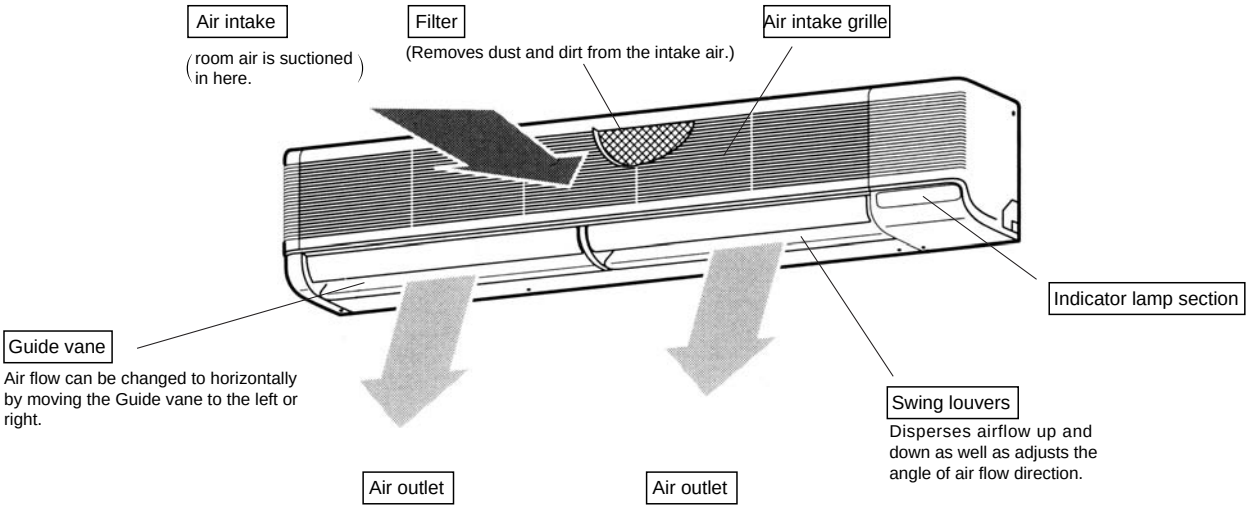

Elegant design and compact dimensions are ideal for offices, stores and residential uses.

1 Compact Design (PKA-GAL)

Units have now been downsized to require minimal wall space. A 20% reduction in width(990mm) compared to previous models means that installation is possible in very narrow spaces.

2 AUTO-Flap Shutter Enhances Good Looks

3 The Filter Can be Completely Removed Allowing Easy Cleaning (Can be washed in water)

4 Quiet Operation (PKA-GAL)

Airflow passage configuration that assures quiet operation.

- The unit incorporates a random-pitch cycling fan. By changing fan intervals, quiet operation is achieved without reduction in airflow.
  Optimal design of the airflow passage gives a shortened fan diameter and allows a highly compact installation.
- Thanks to a highly practical casing configuration, airflow generated by the fan is distributed uniformly.
- Due to careful positioning of the guide vane axis, air is blown evenly from the fan.
  This prevents mixing with secondary air, and also suppresses condensation.

5 4-way Piping Provides more Flexibility in Selecting Installation Sites

6 Wired Remote Controller Available (Optional)

A separately sold wired remote controller and a terminal block are available to suit various installation sites.

A.2.2 SPECIFICATIONS

Item / Service Ref.				PKA-RP1.6GAL	
Function				Cooling	Heating
Capacity			Btu/h	12,300	14,000
			W	3,600(1,600~4,500)	4,100(1,600~5,200)
Total input			kW	1.03	1.27
INDOOR UNIT	**Service Ref.**			**PKA-RP1.6GAL**	
	Power supply(phase, cycle, voltage)			Single phase, 50Hz, 220-230-240V	
		Input	kW	0.07	0.07
		Running current	A	0.33	0.33
		Starting current	A	0.40	0.40
	External finish			Munsell 0.70Y 8.59/0.97	
	Heat exchanger			Plate fin coil	
	Fan	Fan(drive) x No.		Line flow (direct) x 1	
		Fan motor output	kW	0.030	
		Airflow(Lo-Mi2-Mi1-Hi)	m³/min(CFM)	9-10-11-12(320-355-390-425)	
		External static pressure	Pa(mmAq)	0(direct blow)	
	Operation control & Thermostat			Wireless remote controller & built-in	
	Noise level(Lo-Mi2-Mi1-Hi)		dB	36-38-41-43	
	Unit drain pipe O.D.		mm(in.)	26(1)	
	Dimensions	W	mm(in.)	990(39)	
		D	mm(in.)	235(9-1/4)	
		H	mm(in.)	340(13-3/8)	
	Weight		kg(lbs)	16(35)	
OUTDOOR UNIT	**Service Ref.**			**PUHZ-RP1.6VHA**	

Item / Service Ref.				PKA-RP2GAL	
Function				Cooling	Heating
Capacity			Btu/h	15,700	15,400
			W	4,600(2,300~5,400)	4,500(2,500~6,200)
Total input			kW	1.63	1.40
INDOOR UNIT	**Service Ref.**			**PKA-RP2GAL**	
	Power supply(phase, cycle, voltage)			Single phase, 50Hz, 220-230-240V	
		Input	kW	0.07	0.07
		Running current	A	0.33	0.33
		Starting current	A	0.40	0.40
	External finish			Munsell 0.70Y 8.59/0.97	
	Heat exchanger			Plate fin coil	
	Fan	Fan(drive) x No.		Line flow (direct) x 1	
		Fan motor output	kW	0.030	
		Airflow(Lo-Mi2-Mi1-Hi)	m³/min(CFM)	9-10-11-12(320-355-390-425)	
		External static pressure	Pa(mmAq)	0(direct blow)	
	Operation control & Thermostat			Wireless remote controller & built-in	
	Noise level(Lo-Mi2-Mi1-Hi)		dB	36-38-41-43	
	Unit drain pipe O.D.		mm(in.)	26(1)	
	Dimensions	W	mm(in.)	990(39)	
		D	mm(in.)	235(9-1/4)	
		H	mm(in.)	340(13-3/8)	
	Weight		kg(lbs)	16(35)	
OUTDOOR UNIT	**Service Ref.**			**PUHZ-RP2VHA**	

Notes1. Rating Conditions (ISO T1)
Cooling : Indoor : D.B. 27˚C(80˚F), W.B. 19˚C (66˚F) Outdoor : D.B. 35˚C(95˚F), W.B. 24˚C (75˚F)
Heating : Indoor : D.B. 20˚C(68˚F) Outdoor : D.B. 7˚C(45˚F), W.B. 6˚C (43˚F)
Refrigerant piping length (one way) : 5m (16ft)

2. Guaranteed operating range

		Indoor	Outdoor
Cooling	Upper limit	D.B. 35˚C, W.B. 22.5˚C	D.B. 46˚C
	Lower limit	D.B. 19˚C, W.B. 15˚C	D.B. -5˚C
Heating	Upper limit	D.B. 28˚C	D.B. 21˚C, W.B. 15˚C
	Lower limit	D.B. 17˚C	D.B. -11˚C, W.B. -12˚C

3. Guaranteed voltage
198~264V, 50Hz

4. Above data based on indicated voltage
Indoor Unit Single phase 230V 50Hz
Outdoor Unit Single phase 230V 50Hz

5. Refer to the data book of outdoor unit for the outdoor unit's specifications.

Item \ Service Ref.				PKA-RP2.5FAL	
Function				Cooling	Heating
Capacity			Btu/h	20,500	23,900
			W	6,000(2,700~6,700)	7,000(2,800~8,200)
Total input			kW	1.55	2.01
INDOOR UNIT	**Service Ref.**			**PKA-RP2.5FAL**	
	Power supply(phase, cycle, voltage)			Single phase, 50Hz, 220-230-240V	
		Input	kW	0.09	0.09
		Running current	A	0.43	0.43
		Starting current	A	0.80	0.80
	External finish			Munsell 3.4Y 7.7/0.8	
	Heat exchanger			Plate fin coil	
	Fan	Fan(drive) x No.		Line flow (direct) x 2	
		Fan motor output	kW	0.040	
		Airflow(Low-High)	m³/min(CFM)	15-20(530-705)	
		External static pressure	Pa(mmAq)	0(direct blow)	
	Operation control & Thermostat			Wireless remote controller & built-in	
	Noise level(Low-High)		dB	39-45	
	Unit drain pipe O.D.		mm(in.)	26(1)	
	Dimensions	W	mm(in.)	1,400(55-1/8)	
		D	mm(in.)	235(9-1/4)	
		H	mm(in.)	340(13-3/8)	
	Weight		kg(lbs)	24(53)	
OUTDOOR UNIT	**Service Ref.**			**PUHZ-RP2.5VHA**	

Item \ Service Ref.				PKA-RP3FAL	
Function				Cooling	Heating
Capacity			Btu/h	24,200	27,300
			W	7,100(3,300~8,100)	8,000(3,500~10,200)
Total input			kW	1.98	2.40
INDOOR UNIT	**Service Ref.**			**PKA-RP3FAL**	
	Power supply(phase, cycle, voltage)			Single phase, 50Hz, 220-230-240V	
		Input	kW	0.09	0.09
		Running current	A	0.43	0.43
		Starting current	A	0.80	0.80
	External finish			Munsell 3.4Y 7.7/0.8	
	Heat exchanger			Plate fin coil	
	Fan	Fan(drive) x No.		Line flow (direct) x 2	
		Fan motor output	kW	0.040	
		Airflow(Low-High)	m³/min(CFM)	15-20(530-706)	
		External static pressure	Pa(mmAq)	0(direct blow)	
	Operation control & Thermostat			Wireless remote controller & built-in	
	Noise level(Low-High)		dB	39-45	
	Unit drain pipe O.D.		mm(in.)	26(1)	
	Dimensions	W	mm(in.)	1,400(55-1/8)	
		D	mm(in.)	235(9-1/4)	
		H	mm(in.)	340(13-3/8)	
	Weight		kg(lbs)	24(53)	
OUTDOOR UNIT	**Service Ref.**			**PUHZ-RP3VHA**	

Notes1. Rating Conditions (ISO T1)
Cooling : Indoor : D.B. 27˚C(80˚F), W.B. 19˚C (66˚F) Outdoor : D.B. 35˚C(95˚F), W.B. 24˚C (75˚F)
Heating : Indoor : D.B. 20˚C(68˚F) Outdoor : D.B. 7˚C(45˚F), W.B. 6˚C (43˚F)
Refrigerant piping length (one way) : 5m (16ft)

2. Guaranteed operating range

		Indoor	Outdoor
Cooling	Upper limit	D.B. 35˚C, W.B. 22.5˚C	D.B. 46˚C
	Lower limit	D.B. 19˚C, W.B. 15˚C	D.B. -5˚C
Heating	Upper limit	D.B. 28˚C	D.B. 21˚C, W.B. 15˚C
	Lower limit	D.B. 17˚C	D.B. -11˚C, W.B. -12˚C

3. Guaranteed voltage
198~264V, 50Hz

4. Above data based on indicated voltage
Indoor Unit Single phase 230V 50Hz
Outdoor Unit Single phase 230V 50Hz

5. Refer to the data book of outdoor unit for the outdoor unit's specifications.

Item				Service Ref.	PKA-RP4FAL	
Function					Cooling	Heating
Capacity				Btu/h	34,100	38,200
		PUHZ-RP4VAH		W	10,000(4,900~11,400)	11,200(4,500~14,000)
Total input				kW	2.93	3.25
INDOOR UNIT	**Service Ref.**				**PKA-RP4FAL**	
	Power supply(phase, cycle, voltage)				Single phase, 50Hz, 220-230-240V	
		Input		kW	0.11	0.11
		Running current		A	0.52	0.52
		Starting current		A	0.90	0.90
	External finish				Munsell 3.4Y 7.7/0.8	
	Heat exchanger				Plate fin coil	
	Fan	Fan(drive) x No.			Line flow (direct) x 2	
		Fan motor output		kW	0.070	
		Airflow(Low-High)		m³/min(CFM)	22-28(775-990)	
		External static pressure		Pa(mmAq)	0(direct blow)	
	Operation control & Thermostat				Wireless remote controller & built-in	
	Noise level(Low-High)			dB	41-46	
	Unit drain pipe O.D.			mm(in.)	26(1)	
	Dimensions		W	mm(in.)	1,680(66-1/8)	
			D	mm(in.)	235(9-1/4)	
			H	mm(in.)	340(13-3/8)	
	Weight			kg(lbs)	28(62)	
OUTDOOR UNIT	**Service Ref.**				**PUHZ-RP4VHA**	

Notes1. Rating Conditions (ISO T1)
Cooling : Indoor : D.B. 27˚C(80˚F), W.B. 19˚C (66˚F) Outdoor : D.B. 35˚C(95˚F), W.B. 24˚C (75˚F)
Heating : Indoor : D.B. 20˚C(68˚F) Outdoor : D.B. 7˚C(45˚F), W.B. 6˚C (43˚F)
Refrigerant piping length (one way) : 5m (16ft)

2. Guaranteed operating range

		Indoor	Outdoor
Cooling	Upper limit	D.B. 35˚C, W.B. 22.5˚C	D.B. 46˚C
	Lower limit	D.B. 19˚C, W.B. 15˚C	D.B. -5˚C
Heating	Upper limit	D.B. 28˚C	D.B. 21˚C, W.B. 15˚C
	Lower limit	D.B. 17˚C	D.B. -11˚C, W.B. -12˚C

3. Guaranteed voltage
198~264V, 50Hz

4. Above data based on indicated voltage
Indoor Unit Single phase 230V 50Hz
Outdoor Unit Single phase 230V 50Hz

5. Refer to the data book of outdoor unit for the outdoor unit's specifications.

A.2.3 OUTLINES AND DIMENSIONS

Unit : mm

PKA-RP1.6GAL
PKA-RP2GAL

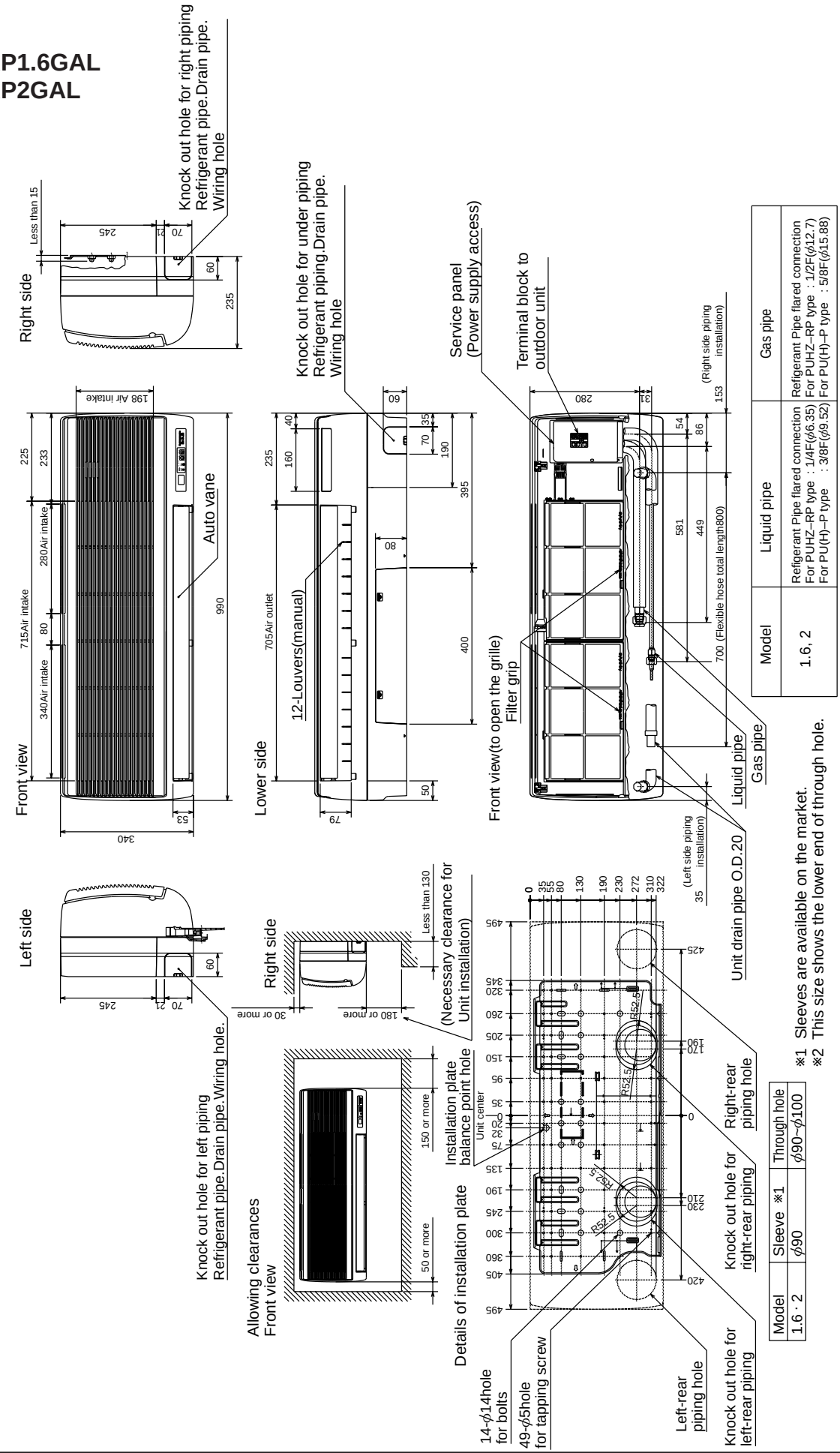

Model	Liquid pipe	Gas pipe
1.6, 2	Refigerant Pipe flared connection For PUHZ–RP type : 1/4F(φ6.35) For PU(H)–P type : 3/8F(φ9.52)	Refigerant Pipe flared connection For PUHZ–RP type : 1/2F(φ12.7) For PU(H)–P type : 5/8F(φ15.88)

Model	Sleeve ※1	Through hole
1.6 · 2	φ90	φ90~φ100

※1 Sleeves are available on the market.
※2 This size shows the lower end of through hole.

PKA-RP2.5FAL
PKA-RP3FAL

Unit : mm

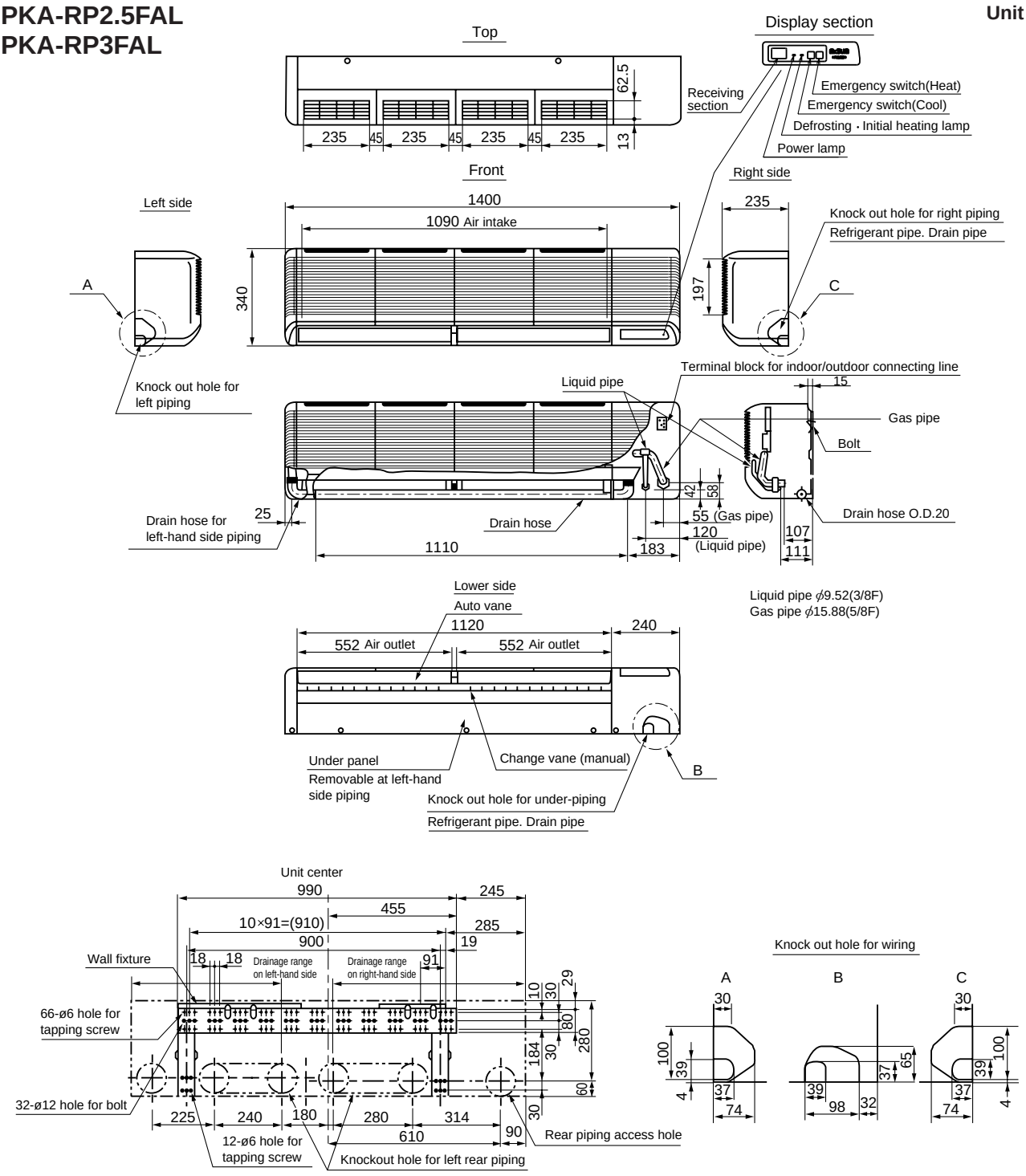

PKA-RP4FAL

Unit : mm

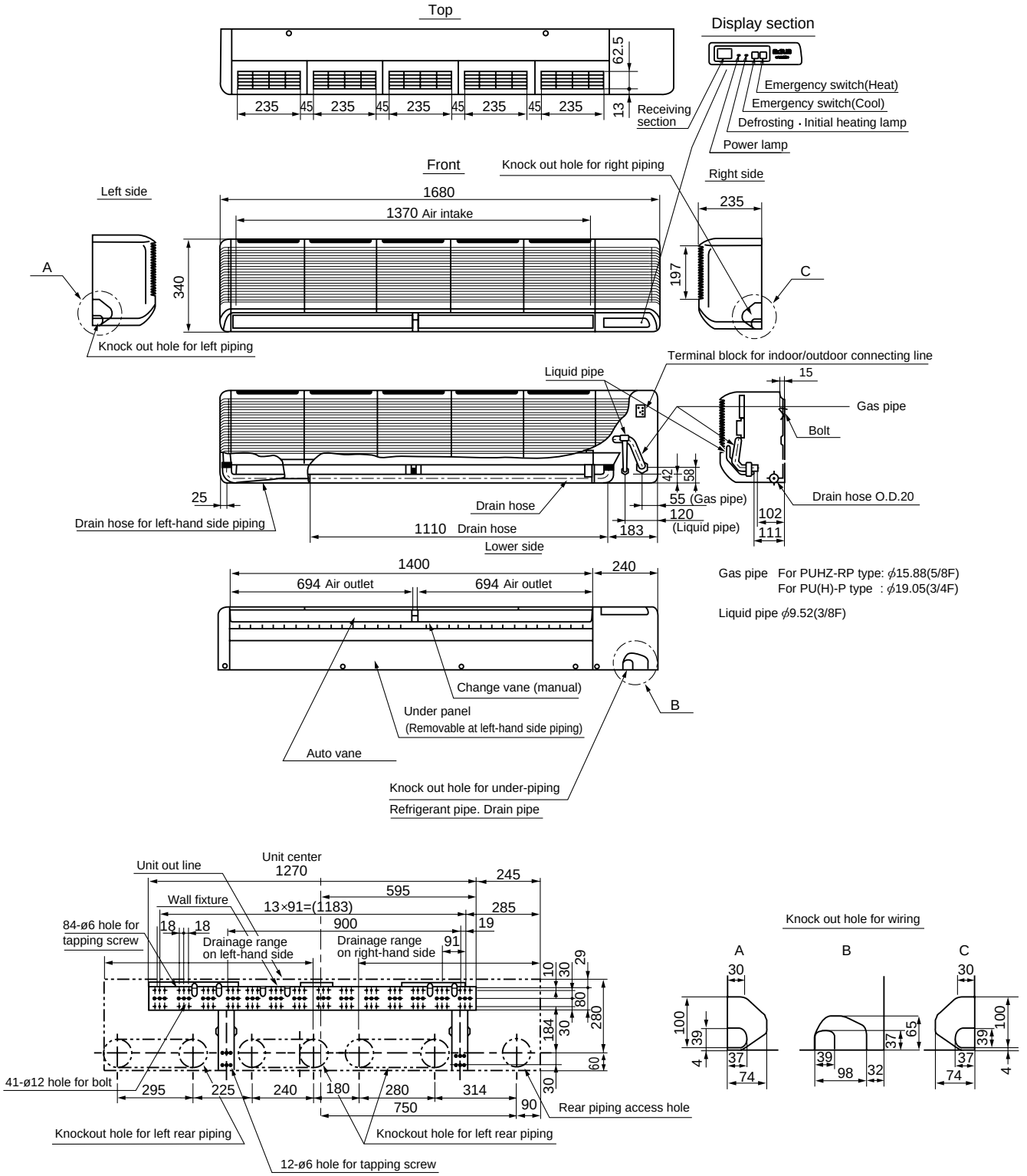

A.2.4 WIRING DIAGRAM

PKA-RP1.6GAL PKA-RP2GAL

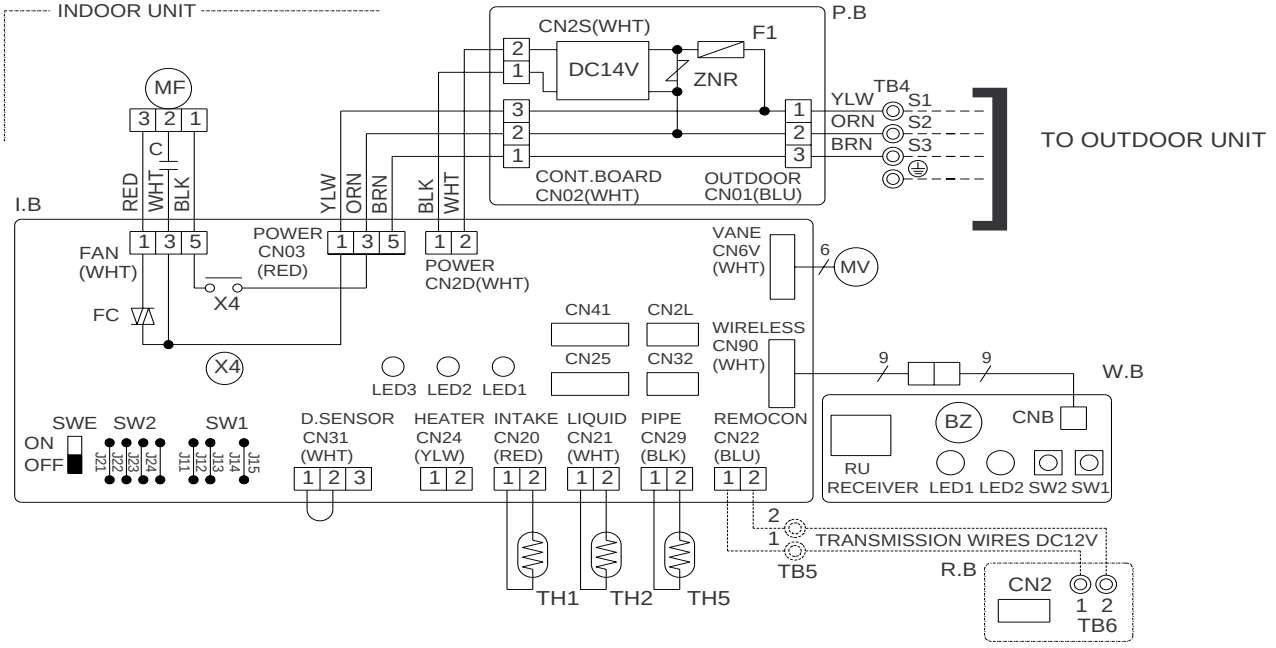

Please set the voltage using the remote controller.
For the setting method,please refer to the indoor unit Installation Manual.

SW1		MODELS	SW2		MODELS	SW2	
Manufacture	Service board		Manufacture	Service board		Manufacture	Service board
J11 J12 J13 J14 J15	1 2 3 4 5 ON OFF	1.6GAL	J21 J22 J23 J24	1 2 3 4 ON OFF	2GAL	J21 J22 J23 J24	1 2 3 4 ON OFF

SYMBOL		NAME	SYMBOL	NAME	SYMBOL		NAME
P.B		INDOOR POWER BOARD	C	CAPACITOR(FAN MOTOR)	W.B		WIRELESS REMOTE CONTROLLER BOARD
	F1	FUSE(4A)	MF	FAN MOTOR		RU	RECEIVING UNIT
	ZNR	VARISTOR	MV	VANE MOTOR		BZ	BUZZER
I.B		INDOOR CONTROLLER BOARD	TB4	TERMINAL BLOCK(INDOOR/OUTDOOR CONNECTING LINE)		LED1	LED(RUN INDICATOR)
	CN2L	CONNECTOR(LOSSNAY)				LED2	LED(HOT ADJUST)
	CN32	CONNECTOR(REMOTE SWITCH)	TB5	TERMINAL BLOCK(REMOTE CONTROLLER TRANSMISSION LINE)(OPTION)		SW1	SWITCH(HEATING ON/OFF)
	CN41	CONNECTOR(HA TERMINAL-A)				SW2	SWITCH(COOLING ON/OFF)
	SW1	JUMPER WIRE(MODEL SELECTION)	TH1	ROOM TEMP.THERMISTOR (0°C/15kΩ,25°C/5.4kΩ DETECT)	R.B		REMOTE CONTROLLER BOARD(OPTION)
	SW2	JUMPER WIRE(CAPACITY CORD)				CN2	CONNECTOR(PROGRAM TIMER)
	SWE	SWITCH(EMERGENCY OPERATION)	TH2	PIPE TEMP.THERMISTOR/LIQUID (0°C/15kΩ,25°C/5.4kΩ DETECT)		TB6	TERMINAL BLOCK(REMOTE CONTROLLER TRANSMISSION LINE)
	X4	RELAY(FAN MOTOR)					
	FC	FAN PHASE CONTROL	TH5	COND./EVA.TEMP.THERMISTOR (0°C/15kΩ,25°C/5.4kΩ DETECT)			
	LED1	POWER SUPPLY(I.B)					
	LED2	POWER SUPPLY(R.B)					
	LED3	TRANSMISSION(INDOOR-OUTDOOR)					

NOTES:
1.Since the outdoor side electric wiring may change be sure to check the outdoor unit electric wiring for servicing.
2.Indoor and outdoor connecting wires are made with polarities,make wiring matching terminal numbers(S1,S2,S3).
3.Make sure that the main power supply of the booster heater is independent.
4.Symbols used in wiring diagram above are, ▭▭▭ :Connector, ◎ :Terminal (block).

[Self-diagnosis]
An explanation of the wireless remote controller self checking operations,check codes,buzzer sounds and LED signals are given below. For check codes and symptom see the table below please.

1.Press the CHECK button twice continuously.
- CHECK begins to light and refrigerant address display "00" begins to blink.
- Start this operation from the status of remote controller display turned off.

2.Press the TEMP ▼,▲ buttons.
- Set the refrigerant address of the indoor unit that is to be self-diagnosed.
- Set the refrigerant address of outdoor unit by outdoor unit dip switch "SW1".
(Refer to installation manual of outdoor unit for the detail.)

3.While pointing the remote controller toward the unit's receiver, press the h button.
- The check code will be indicated by the number of times that the buzzer sounds from the receiver section and the number of blinks of the operation lamp.

4.While pointing the remote controller toward the unit's receiver, press the ON/OFF button.
- Self-check mode is canceled.

Check code	Operation lamp	Buzzer sound	Symptom
P1	1SEC.FLASH×1	Single beep×1	Abnormality of room temperature thermistor(TH1).
P2	1SEC.FLASH×2	Single beep×2	Abnormality of pipe temperature thermistor/Liquid(TH2).
P6	1SEC.FLASH×6	Single beep×6	Freezing /overheating protection is working.
P8	1SEC.FLASH×8	Single beep×8	Abnormality of pipe temperature.
P9	1SEC.FLASH×2	Single beep×2	Abnormality of pipe temperature thermistor/ Cond./Eva.(TH5).
U0~UL F1~F9	(0.4+0.4)SEC.FLASH×1	Double beep×1	Abnormality in outdoor unit. Refer to outdoor unit wiring diagram.
E6~EF	DIFFERENT FROM ABOVE	Sounds other than above	Abnormality of signal transmission between indoor unit and outdoor unit ("EE" indicates abnormality of combination).
----	OFF	No sound	No trouble generated in the past.
FFFF	OFF	Triple beep	No corresponding unit.

PKA-RP2.5FAL PKA-RP3FAL PKA-RP4FAL

SYMBOL		NAME	SYMBOL	NAME	SYMBOL		NAME
P.B		INDOOR POWER BOARD	C	CAPACITOR(FAN MOTOR)	W.B		WIRELESS REMOTE CONTROLLER BOARD
	F1	FUSE(4A)	MF	FAN MOTOR		RU	RECEIVING UNIT
	ZNR	VARISTOR	MV	VANE MOTOR		BZ	BUZZER
I.B		INDOOR CONTROLLER BOARD	TB4	TERMINAL BLOCK(INDOOR/OUTDOOR CONNECTING LINE)		LED1	LED(RUN INDICATOR)
	CN2L	CONNECTOR(LOSSNAY)				LED2	LED(HOT ADJUST)
	CN32	CONNECTOR(REMOTE SWITCH)	TB5	TERMINAL BLOCK(REMOTE CONTROLLER TRANSMISSION LINE)(OPTION)		SW1	SWITCH(HEATING ON/OFF)
	CN41	CONNECTOR(HA TERMINAL-A)				SW2	SWITCH(COOLING ON/OFF)
	SW1	JUMPER WIRE(MODEL SELECTION)	TH1	ROOM TEMPERATURE THERMISTOR (0°C/15kΩ, 25°C/5.4kΩ DETECT)	R.B		REMOTE CONTROLLER BOARD(OPTION)
	SW2	JUMPER WIRE(CAPACITY CODE)				CN2	CONNECTOR(SCHEDULE TIMER)
	SWE	SWITCH(EMERGENCY OPERATION)	TH2	PIPE TEMPERATURE THERMISTOR/LIQUID (0°C/15kΩ, 25°C/5.4kΩ DETECT)		TB6	TERMINAL BLOCK(REMOTE CONTROLLER TRANSMISSION LINE)
	X4	RELAY(FAN MOTOR)					
	FC	FAN PHASE CONTROL	TH5	CONDENSER / EVAPORATOR TEMPERATURE THERMISTOR (0°C/15kΩ, 25°C/5.4kΩ DETECT)			
	LED1	POWER SUPPLY(I.B)					
	LED2	POWER SUPPLY(R.B)					
	LED3	TRANSMISSION(INDOOR-OUTDOOR)					

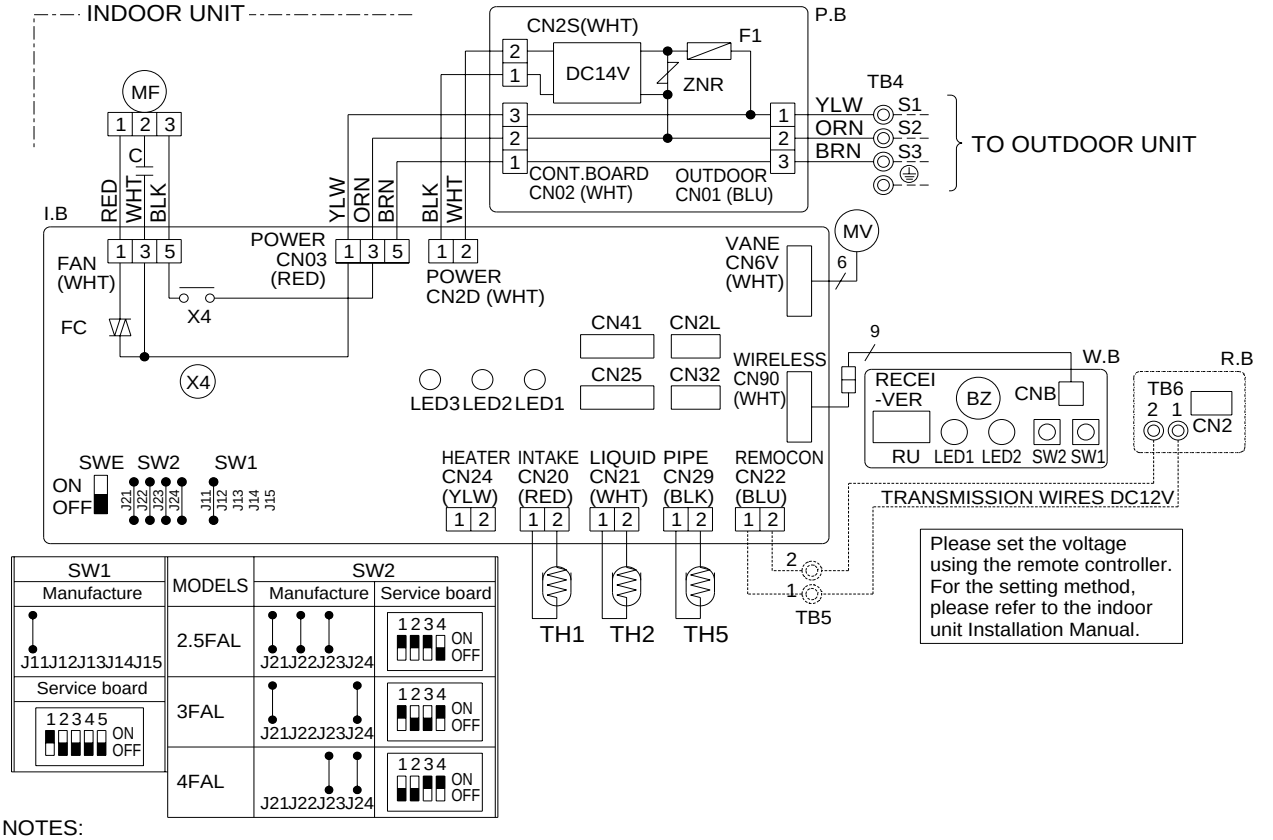

SW1	MODELS	SW2	
Manufacture		Manufacture	Service board
J11J12J13J14J15	2.5FAL	J21J22J23J24	1 2 3 4 ON OFF
Service board	3FAL	J21J22J23J24	1 2 3 4 ON OFF
1 2 3 4 5 ON OFF	4FAL	J21J22J23J24	1 2 3 4 ON OFF

NOTES:
1.Since the outdoor side electric wiring may change be sure to check the outdoor unit electric wiring for servicing.
2.Indoor and outdoor connecting wires are made with polarities, make wiring matching terminal numbers(S1, S2, S3).
3.Symbols used in wiring diagram above are, □□□ :Connector, ◎:Terminal (block).

[Self-diagnosis]
An explanation of the wireless remote controller self checking operations, check codes, buzzer sounds and LED signals are given below. For check codes and symptom see the table below please.

1.Press the CHECK button twice continuously.
- CHECK begins to light and refrigerant address display "00" begins to blink.
- Start this operation from the status of remote controller display turned off.

2.Press the TEMP ▼ , ▲ buttons.
- Set the refrigerant address of the indoor unit that is to be self-diagnosed.
- Set the refrigerant address of outdoor unit by outdoor unit dip switch "SW1". (Refer to installation manual of outdoor unit for the detail.)

3.While pointing the remote controller toward the unit's receiver, press the h button.
- The check code will be indicated by the number of times that the buzzer sounds from the receiver section and the number of blinks of the operation lamp.

4.While pointing the remote controller toward the unit's receiver, press the ON/OFF button.
- Self-check mode is canceled.

Check code	Operation lamp	Buzzer sound	Symptom
P1	1SEC.FLASH × 1	Single beep × 1	Abnormality of room temperature thermistor(TH1).
P2	1SEC.FLASH × 2	Single beep × 2	Abnormality of pipe temperature thermistor/Liquid(TH2).
P4	1SEC.FLASH × 4	Single beep × 4	Abnormality of drain sensor(DS).
P5	1SEC.FLASH × 5	Single beep × 5	Malfunction of drain-up machine.
P6	1SEC.FLASH × 6	Single beep × 6	Freezing /overheating protection is working.
P8	1SEC.FLASH × 8	Single beep × 8	Abnormality of pipe temperature.
P9	1SEC.FLASH × 2	Single beep × 2	Abnormality of pipe temperature thermistor/ Condenser/Evaporator(TH5).
U0~UL F1~F9	(0.4+0.4)SEC.FLASH × 1	Double beep × 1	Abnormality in outdoor unit. Refer to outdoor unit wiring diagram.
E6~EF	DIFFERENT FROM ABOVE	Sounds other than above	Abnormality of signal transmission between indoor unit and outdoor unit ("EE" indicates abnormality of combination).
----	OFF	No sound	No trouble generated in the past.
FFFF	OFF	Triple beep	No corresponding unit.

A.2.5 REFRIGERANT SYSTEM DIAGRAM

PKA-RP1.6GAL PKA-RP2GAL
PKA-RP2.5FAL PKA-RP3FAL PKA-RP4FAL

Unit : mm

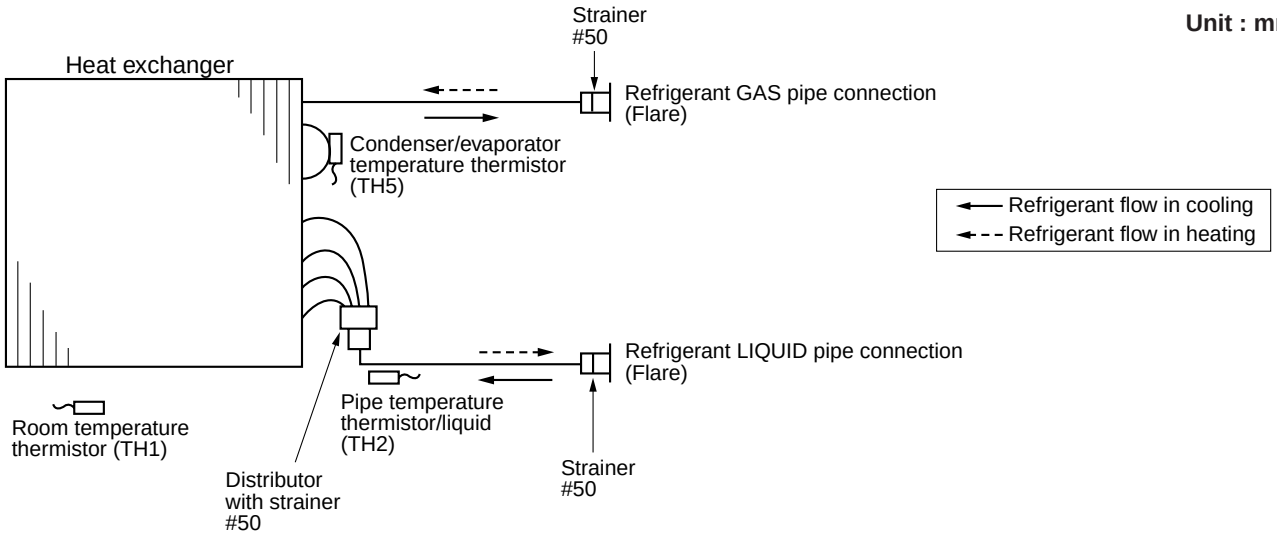

A.2.6 PERFORMANCE DATA

A.2.6.1 PERFORMANCE DATA

COOLING CAPACITY

PKA-RP1.6GAL / PUHZ-RP1.6VHA

(230V)

Indoor Intake air D.B.(°C)	Indoor Intake air W.B.(°C)	Outdoor intake air D.B.(°C)											
		20				25				30			
		CA	SHC(W)	SHF	P.C.	CA	SHC(W)	SHF	P.C.	CA	SHC(W)	SHF	P.C.
20	16	3,564	2,637	0.74	0.82	3,456	2,257	0.74	0.87	3,348	2,478	0.74	0.92
20	18	3,816	2,366	0.62	0.84	3,708	2,299	0.62	0.89	3,582	2,221	0.62	0.95
20	20	4,104	2,052	0.50	0.87	4,014	2,007	0.50	0.91	3,906	1,953	0.50	0.97
22	16	3,564	2,922	0.82	0.82	3,456	2,834	0.82	0.87	3,348	2,745	0.82	0.92
22	18	3,816	2,671	0.70	0.84	3,708	2,596	0.70	0.89	3,582	2,507	0.70	0.95
22	20	4,104	2,380	0.58	0.87	4,014	2,328	0.58	0.91	3,906	2,265	0.58	0.97
24	16	3,564	3,208	0.90	0.82	3,456	3,110	0.90	0.87	3,348	3,013	0.90	0.92
24	18	3,816	2,976	0.78	0.84	3,708	2,892	0.78	0.89	3,582	2,794	0.78	0.95
24	20	4,104	2,709	0.66	0.87	4,014	2,649	0.66	0.91	3,906	2,578	0.66	0.97
24	22	4,374	2,362	0.54	0.89	4,284	2,313	0.54	0.94	4,176	2,255	0.54	1.00
26	16	3,564	3,493	0.98	0.82	3,456	3,387	0.998	0.87	3,348	3,281	0.98	0.92
26	18	3,816	3,282	0.86	0.84	3,708	3,189	0.86	0.89	3,582	3,081	0.86	0.95
26	20	4,104	3,037	0.74	0.87	4,014	2,970	0.74	0.91	3,906	2,890	0.74	0.97
26	22	4,374	2,712	0.62	0.89	4,284	2,656	0.62	0.94	4,176	2,589	0.62	1.00
27	16	3,564	3,564	1.00	0.82	3,456	3,456	1.00	0.87	3,348	3,348	1.00	0.92
27	18	3,816	3,434	0.90	0.84	3,708	3,337	0.90	0.89	3,582	3,224	0.90	0.95
27	20	4,104	3,201	0.78	0.87	4,014	3,131	0.78	0.91	3,906	3,047	0.78	0.97
27	22	4,374	2,887	0.66	0.89	4,284	2,827	0.66	0.94	4,176	2,756	0.65	1.00
28	16	3,564	3,564	1.00	0.82	3,456	3,456	1.00	0.87	3,348	3,348	1.00	0.92
28	18	3,816	3,587	0.94	0.84	3,708	3,486	0.94	0.89	3,582	3,367	0.94	0.95
28	20	4,104	3,356	0.82	0.87	4,014	3,291	0.82	0.91	3,906	3,203	0.82	0.97
28	22	4,374	3,062	0.70	0.89	4,284	2,999	0.70	0.94	4,176	2,923	0.70	1.00
30	16	3,564	3,564	1.00	0.82	3,456	3,456	1.00	0.87	3,348	3,348	1.00	0.92
30	18	3,816	3,816	1.00	0.84	3,708	3,708	1.00	0.89	3,582	3,582	1.00	0.95
30	20	4,104	3,694	0.90	0.87	4,014	3,613	0.90	0.91	3,906	3,515	0.90	0.97
30	22	4,374	3,412	0.78	0.89	4,284	3,342	0.78	0.94	4,176	3,257	0.78	1.00
32	16	3,564	3,564	1.00	0.82	3,456	3,456	1.00	0.87	3,348	3,348	1.00	0.92
32	18	3,816	3,816	1.00	0.84	3,708	3,708	1.00	0.89	3,582	3,582	1.00	0.95
32	20	4,104	4,022	0.98	0.87	4,014	3,934	0.98	0.91	3,906	3,828	0.98	0.97
32	22	4,374	3,762	0.86	0.89	4,284	3,684	0.86	0.94	4,176	3,591	0.86	1.00
34	16	3,564	3,564	1.00	0.82	3,456	3,456	1.00	0.87	3,348	3,348	1.00	0.92
34	18	3,816	3,816	1.00	0.84	3,708	3,708	1.00	0.89	3,582	3,582	1.00	0.95
34	20	4,104	4,104	1.00	0.87	4,014	4,014	1.00	0.91	3,906	3,906	1.00	0.97
34	22	4,374	4,112	0.94	0.89	4,284	4,027	0.94	0.94	4,176	3,925	0.94	1.00

CA : Capacity (W)
P.C. : Power consumption (kW)
SHC(W) : Sensible heat capacity
SHF : Sensible heat factor

COOLING CAPACITY
PKA-RP1.6GAL / PUHZ-RP1.6VHA

(230V)

Indoor Intake air D.B.(°C)	Indoor Intake air W.B.(°C)	Outdoor intake air D.B.(°C)											
		35				40				45			
		CA	SHC(W)	SHF	P.C.	CA	SHC(W)	SHF	P.C.	CA	SHC(W)	SHF	P.C.
20	16	3,204	2,371	0.74	0.99	3,060	2,264	0.74	1.06	2,916	2,158	0.74	1.15
20	18	3,456	2,143	0.62	1.01	3,348	2,076	0.62	1.09	3,132	1,942	0.62	1.17
20	20	3,744	1,872	0.50	1.04	3,600	1,800	0.50	1.11	3,384	1,692	0.50	1.19
22	16	3,204	2,627	0.82	0.99	3,060	2,509	0.82	1.06	2,916	2,391	0.82	1.15
22	18	3,456	2,419	0.70	1.01	3,348	2,344	0.70	1.09	3,132	2,192	0.70	1.17
22	20	3,744	2,172	0.58	1.04	3,600	2,088	0.58	1.11	3,384	1,963	0.58	1.19
24	16	3,204	2,884	0.90	0.99	3,060	2,754	0.90	1.06	2,916	2,624	0.90	1.15
24	18	3,456	2,696	0.78	1.01	3,348	2,611	0.78	1.09	3,132	2,443	0.78	1.17
24	20	3,744	2,471	0.66	1.04	3,600	2,376	0.66	1.11	3,384	2,233	0.66	1.19
24	22	4,032	2,177	0.54	1.06	3,888	2,100	0.54	1.14	3,672	1,983	0.54	1.22
26	16	3,204	3,140	0.98	0.99	3,060	2,999	0.98	1.06	2,916	2,858	0.98	1.15
26	18	3,456	2,972	0.86	1.01	3,348	2,879	0.86	1.09	3,132	2,694	0.86	1.17
26	20	3,744	2,771	0.74	1.04	3,600	2,664	0.74	1.11	3,384	2,504	0.74	1.19
26	22	4,032	2,500	0.62	1.06	3,888	2,411	0.62	1.14	3,672	2,277	0.62	1.22
27	16	3,204	3,204	1.00	0.99	3,060	3,060	1.00	1.06	2,916	2,916	1.00	1.15
27	18	3,456	3,110	0.90	1.01	3,348	3,013	0.90	1.09	3,132	2,819	0.90	1.17
27	20	3,744	2,920	0.78	1.04	3,600	2,808	0.78	1.11	3,384	2,640	0.78	1.19
27	22	4,032	2,661	0.66	1.06	3,888	2,566	0.66	1.14	3,672	2,424	0.66	1.22
28	16	3,204	3,204	1.00	0.99	3,060	3,060	1.00	1.06	2,916	2,916	1.00	1.15
28	18	3,456	3,249	0.94	1.01	3,348	3,147	0.94	1.09	3,132	2,944	0.94	1.17
28	20	3,744	3,070	0.82	1.04	3,600	2,952	0.82	1.11	3,384	2,775	0.82	1.19
28	22	4,032	2,822	0.70	1.06	3,888	2,722	0.70	1.14	3,672	2,570	0.70	1.22
30	16	3,204	3,204	1.00	0.99	3,060	3,060	1.00	1.06	2,916	2,916	1.00	1.15
30	18	3,456	3,456	1.00	1.01	3,348	3,348	1.00	1.09	3,132	3,132	1.00	1.17
30	20	3,744	3,370	0.90	1.04	3,600	3,240	0.90	1.11	3,384	3,046	0.90	1.19
30	22	4,032	3,145	0.78	1.06	3,888	3,033	0.78	1.14	3,672	2,864	0.78	1.22
32	16	3,204	3,204	1.00	0.99	3,060	3,060	1.00	1.06	2,916	2,916	1.00	1.15
32	18	3,456	3,456	1.00	1.01	3,348	3,488	1.00	1.09	3,132	3,132	1.00	1.17
32	20	3,744	3,669	0.98	1.04	3,600	3,528	0.98	1.11	3,384	3,316	0.98	1.19
32	22	4,032	3,468	0.86	1.06	3,888	3,344	0.86	1.14	3,672	3,158	0.86	1.22
34	16	3,204	3,204	1.00	0.99	3,060	3,060	1.00	1.06	2,916	2,916	1.00	1.15
34	18	3,456	3,456	1.00	1.01	3,348	3,348	1.00	1.09	3,132	3,132	1.00	1.17
34	20	3,744	3,744	1.00	1.04	3,600	3,600	1.00	1.11	3,384	3,384	1.00	1.19
34	22	4,032	3,790	0.94	1.06	3,888	3,655	0.94	1.14	3,672	3,452	0.94	1.22

CA : Capacity (W)
P.C. : Power consumption (kW)
SHC(W) : Sensible heat capacity
SHF : Sensible heat factor

COOLING CAPACITY
PKA-RP2GAL / PUHZ-RP2VHA

(230V)

Indoor Intake air D.B.(°C)	Indoor Intake air W.B.(°C)	Outdoor intake air D.B.(°C)											
		20				25				30			
		CA	SHC(W)	SHF	P.C.	CA	SHC(W)	SHF	P.C.	CA	SHC(W)	SHF	P.C.
20	16	4,554	2,915	0.64	1.30	4,416	2,826	0.64	1.38	4,278	2,738	0.64	1.46
20	18	4,876	2,536	0.52	1.33	4,738	2,464	0.52	1.40	4,577	2,380	0.52	1.50
20	20	5,244	2,098	0.40	1.37	5,129	2,052	0.40	1.43	4,991	1,996	0.40	1.53
22	16	4,554	3,279	0.72	1.30	4,416	3,180	0.72	1.38	4,278	3,080	0.72	1.46
22	18	4,876	2,926	0.60	1.33	4,738	2,843	0.60	1.40	4,577	2,746	0.60	1.50
22	20	5,244	2,517	0.48	1.37	5,129	2,462	0.48	1.43	4,991	2,396	0.48	1.53
24	16	4,554	3,643	0.80	1.30	4,416	3,533	0.80	1.38	4,278	3,422	0.80	1.46
24	18	4,876	3,316	0.68	1.33	4,738	3,222	0.68	1.40	4,577	3,112	0.68	1.50
24	20	5,244	2,937	0.56	1.37	5,129	2,872	0.56	1.43	4,991	2,795	0.56	1.53
24	22	5,589	2,459	0.44	1.40	5,474	2,409	0.44	1.48	5,336	2,348	0.44	1.58
26	16	4,554	4,008	0.88	1.30	4,416	3,886	0.88	1.38	4,278	3,765	0.88	1.46
26	18	4,876	3,706	0.76	1.33	4,738	3,601	0.76	1.40	4,577	3,479	0.76	1.50
26	20	5,244	3,356	0.64	1.37	5,129	3,283	0.64	1.43	4,991	3,194	0.64	1.53
26	22	5,589	2,906	0.52	1.40	5,474	2,846	0.52	1.48	5,336	2,775	0.52	1.58
27	16	4,554	4,190	0.92	1.30	4,416	4,063	0.92	1.38	4,278	3,936	0.92	1.46
27	18	4,876	3,901	0.80	1.33	4,738	3,790	0.80	1.40	4,577	3,662	0.80	1.50
27	20	5,244	3,566	0.68	1.37	5,129	3,488	0.68	1.43	4,991	3,394	0.68	1.53
27	22	5,589	3,130	0.56	1.40	5,474	3,065	0.56	1.48	5,336	2,988	0.56	1.58
28	16	4,554	4,372	0.96	1.30	4,416	4,239	0.96	1.38	4,278	4,107	0.96	1.46
28	18	4,876	4,096	0.84	1.33	4,738	3,980	0.84	1.40	4,577	3,845	0.84	1.50
28	20	5,244	3,776	0.72	1.37	5,129	3,693	0.72	1.43	4,991	3,594	0.72	1.53
28	22	5,589	3,353	0.60	1.40	5,474	3,284	0.60	1.48	5,336	3,202	0.60	1.58
30	16	4,554	4,554	1.00	1.30	4,416	4,416	1.00	1.38	4,278	4,278	1.00	1.46
30	18	4,876	4,486	0.92	1.33	4,738	4,359	0.92	1.40	4,577	4,211	0.92	1.50
30	20	5,244	4,195	0.80	1.37	5,129	4,103	0.80	1.43	4,991	3,993	0.80	1.53
30	22	5,589	3,801	0.68	1.40	5,474	3,722	0.68	1.48	5,336	3,628	0.68	1.58
32	16	4,554	4,554	1.00	1.30	4,416	4,416	1.00	1.38	4,278	4,278	1.00	1.46
32	18	4,876	4,876	1.00	1.33	4,738	4,738	1.00	1.40	4,577	4,577	1.00	1.50
32	20	5,244	4,615	0.88	1.37	5,129	4,514	0.88	1.43	4,991	4,392	0.88	1.53
32	22	5,589	4,248	0.76	1.40	5,474	4,160	0.76	1.48	5,336	4,055	0.76	1.58
34	16	4,554	4,554	1.00	1.30	4,416	4,416	1.00	1.38	4,278	4,278	1.00	1.46
34	18	4,876	4,876	1.00	1.33	4,738	4,738	1.00	1.40	4,577	4,577	1.00	1.50
34	20	5,244	5,034	0.96	1.37	5,129	4,924	0.96	1.43	4,991	4,791	0.96	1.53
34	22	5,589	4,695	0.84	1.40	5,474	4,598	0.84	1.48	5,336	4,482	0.84	1.58

CA : Capacity (W)
P.C. : Power consumption (kW)
SHC(W) : Sensible heat capacity
SHF : Sensible heat factor

COOLING CAPACITY
PKA-RP2GAL / PUHZ-RP2VHA

(230V)

Indoor Intake air D.B.(°C)	Indoor Intake air W.B.(°C)	Outdoor intake air D.B.(°C)											
		35				40				45			
		CA	SHC(W)	SHF	P.C.	CA	SHC(W)	SHF	P.C.	CA	SHC(W)	SHF	P.C.
20	16	4,094	2,620	0.64	1.56	3,910	2,502	0.64	1.68	3,726	2,385	0.64	1.82
20	18	4,416	2,296	0.52	1.61	4,278	2,225	0.52	1.73	4,022	2,081	0.52	1.86
20	20	4,784	1,914	0.40	1.65	4,600	1,840	0.40	1.76	4,324	1,730	0.40	1.89
22	16	4,094	2,948	0.72	1.56	3,910	2,815	0.72	1.68	3,726	2,683	0.72	1.82
22	18	4,416	2,650	0.60	1.61	4,278	2,567	0.60	1.73	4,002	2,401	0.60	1.86
22	20	4,784	2,296	0.48	1.65	4,600	2,208	0.48	1.76	4,324	2,076	0.48	1.89
24	16	4,094	3,275	0.80	1.56	3,910	3,128	0.80	1.68	3,726	2,981	0.80	1.82
24	18	4,416	3,003	0.68	1.61	4,278	2,909	0.68	1.73	4,002	2,721	0.68	1.86
24	20	4,784	2,679	0.56	1.65	4,600	2,576	0.56	1.76	4,324	2,421	0.56	1.89
24	22	5,152	2,267	0.44	1.68	4,968	2,186	0.44	1.81	4,692	2,064	0.44	1.92
26	16	4,094	3,603	0.88	1.56	3,910	3,441	0.88	1.68	3,726	3,279	0.88	1.82
26	18	4,416	3,356	0.76	1.61	4,278	3,251	0.76	1.73	4,002	3,042	0.76	1.86
26	20	4,784	3,062	0.64	1.65	4,600	2,944	0.64	1.76	4,324	2,767	0.64	1.89
26	22	5,152	2,679	0.52	1.68	4,968	2,583	0.52	1.81	4,692	2,440	0.52	1.92
27	16	4,094	3,766	0.92	1.56	3,910	3,597	0.92	1.68	3,726	3,428	0.92	1.82
27	18	4,416	3,533	0.80	1.61	4,278	3,594	0.80	1.73	4,002	3,202	0.80	1.86
27	20	4,784	3,253	0.68	1.65	4,600	3,312	0.68	1.76	4,324	2,940	0.68	1.89
27	22	5,152	2,885	0.56	1.68	4,968	2,981	0.56	1.81	4,692	2,628	0.56	1.92
28	16	4,094	3,930	0.96	1.56	3,910	3,754	0.96	1.68	3,726	3,577	0.96	1.82
28	18	4,416	3,709	0.84	1.61	4,78	3,594	0.84	1.73	4,002	3,362	0.84	1.86
28	20	4,784	3,444	0.72	1.65	4,600	3,312	0.72	1.76	4,324	3,113	0.72	1.89
28	22	5,152	3,091	0.60	1.68	4,968	2,981	0.60	1.81	4,692	2,815	0.60	1.92
30	16	4,094	4,094	1.00	1.56	3,910	3,910	1.00	1.68	3,726	3,726	1.00	1.82
30	18	4,416	4,063	0.92	1.61	4,278	3,936	0.92	1.73	4,002	3,682	0.92	1.86
30	20	4,784	3,827	0.80	1.65	4,600	3,680	0.80	1.76	4,324	3,459	0.80	1.89
30	22	5,152	3,503	0.68	1.68	4,968	3,378	0.68	1.81	4,692	3,191	0.68	1.92
32	16	4,094	4,094	1.00	1.56	3,910	3,910	1.00	1.68	3,726	3,726	1.00	1.82
32	18	4,416	4,416	1.00	1.61	4,278	4,278	1.00	1.73	4,002	4,002	1.00	1.86
32	20	4,784	4,210	0.88	1.65	4,600	4,048	0.88	1.76	4,324	3,805	0.88	1.89
32	22	5,152	3,916	0.76	1.68	4,968	3,776	0.76	1.81	4,692	3,566	0.76	1.92
34	16	4,094	4,094	1.00	1.56	3,910	3,910	1.00	1.68	3,726	3,726	1.00	1.82
34	18	4,416	4,416	1.00	1.61	4,278	4,278	1.00	1.73	4,002	4,002	1.00	1.86
34	20	4,784	4,593	0.96	1.65	4,600	4,416	0.96	1.76	4,324	4,151	0.96	1.89
34	22	5,152	4,328	0.84	1.68	4,968	4,173	0.84	1.81	4,692	3,941	0.84	1.92

CA : Capacity (W)
P.C. : Power consumption (kW)
SHC(W) : Sensible heat capacity
SHF : Sensible heat factor

COOLING CAPACITY
PKA-RP2.5FAL / PUHZ-RP2.5VHA

(230V)

Indoor Intake air D.B.(°C)	Indoor Intake air W.B.(°C)	Outdoor intake air D.B.(°C)											
		20				25				30			
		CA	SHC(W)	SHF	P.C.	CA	SHC(W)	SHF	P.C.	CA	SHC(W)	SHF	P.C.
20	16	5,940	4,336	0.73	1.24	5,760	4,205	0.73	1.31	5,580	4,073	0.73	1.39
20	18	6,360	3,880	0.61	1.26	6,180	3,770	0.61	1.33	5,970	3,642	0.61	1.43
20	20	6,840	3,352	0.49	1.30	6,690	3,278	0.49	1.36	6,510	3,190	0.49	1.46
22	16	5,940	4,811	0.81	1.24	5,760	4,666	0.81	1.31	5,580	4,520	0.81	1.39
22	18	6,360	4,388	0.69	1.26	6,180	4,264	0.69	1.33	5,970	4,119	0.69	1.43
22	20	6,840	3,899	0.57	1.30	6,690	3,813	0.57	1.36	6,510	3,711	0.57	1.46
24	16	5,940	5,287	0.89	1.33	7,140	5,126	0.89	1.31	5,580	4,966	0.89	1.50
24	18	6,360	4,897	0.77	1.24	5,760	4,759	0.77	1.33	5,970	4,597	0.77	1.39
24	20	6,840	4,446	0.65	1.26	6,180	4,349	0.65	1.36	6,510	4,232	0.65	1.43
24	22	7,290	3,864	0.53	1.30	6,690	3,784	0.53	1.41	6,960	3,689	0.53	1.46
26	16	5,940	5,762	0.97	1.24	5,760	5,587	0.97	1.31	5,580	5,413	0.97	1.39
26	18	6,360	5,406	0.85	1.26	6,180	5,253	0.85	1.33	5,970	5,075	0.85	1.43
26	20	6,840	4,993	0.73	1.30	6,690	4,884	0.73	1.36	6,510	4,752	0.73	1.46
26	22	7,290	4,447	0.61	1.33	7,140	4,355	0.61	1.41	6,960	4,246	0.61	1.50
27	16	5,940	5,940	1.00	1.24	5,760	5,760	1.00	1.31	5,580	5,580	1.00	1.39
27	18	6,360	5,660	0.89	1.26	6,180	5,500	0.89	1.33	5,970	5,313	0.89	1.43
27	20	6,840	5,267	0.77	1.30	6,690	5,151	0.77	1.36	6,510	5,013	0.77	1.46
27	22	7,290	4,739	0.65	1.33	7,140	4,641	0.65	1.41	6,960	4,524	0.65	1.50
28	16	5,940	5,940	1.00	1.24	5,760	5,760	1.00	1.31	5,580	5,580	1.00	1.39
28	18	6,360	5,915	0.93	1.26	6,180	5,747	0.93	1.33	5,970	5,552	0.93	1.43
28	20	6,840	5,540	0.81	1.30	6,690	5,419	0.81	1.36	6,510	5,273	0.81	1.46
28	22	7,290	5,030	0.69	1.33	7,140	4,927	0.69	1.41	6,960	4,802	0.69	1.50
30	16	5,940	5,940	1.00	1.24	5,760	5,760	1.00	1.31	5,580	5,580	1.00	1.39
30	18	6,360	6,360	1.00	1.26	6,180	6,180	1.00	1.33	5,970	5,970	1.00	1.43
30	20	6,840	6,088	0.89	1.30	6,690	5,954	0.89	1.36	6,510	5,794	0.89	1.46
30	22	7,290	5,613	0.77	1.33	7,140	5,498	0.77	1.41	6,960	5,359	0.77	1.50
32	16	5,940	5,940	1.00	1.24	5,760	5,760	1.00	1.31	5,580	5,580	1.00	1.39
32	18	6,360	6,360	1.00	1.26	6,180	6,180	1.00	1.33	5,970	5,970	1.00	1.43
32	20	6,840	6,635	0.97	1.30	6,690	6,489	0.97	1.36	6,510	6,315	0.97	1.46
32	22	7,290	6,197	0.85	1.33	7,140	6,069	0.85	1.41	6,960	5,916	0.85	1.50
34	16	5,940	5,940	1.00	1.24	5,760	5,760	1.00	1.31	5,580	5,580	1.00	1.39
34	18	6,360	6,360	1.00	1.26	6,180	6,180	1.00	1.33	5,970	5,970	1.00	1.43
34	20	6,840	6,840	1.00	1.30	6,690	6,690	1.00	1.36	6,510	6,510	1.00	1.46
34	22	7,290	6,780	0.93	1.33	7,140	6,640	0.93	1.41	6,960	6,473	0.93	1.50

CA : Capacity (W)
P.C. : Power consumption (kW)
SHC(W) : Sensible heat capacity
SHF : Sensible heat factor

COOLING CAPACITY
PKA-RP2.5FAL / PUHZ-RP2.5VHA

(230V)

Indoor Intake air D.B.(°C)	Indoor Intake air W.B.(°C)	Outdoor intake air D.B.(°C)											
		35				40				45			
		CA	SHC(W)	SHF	P.C.	CA	SHC(W)	SHF	P.C.	CA	SHC(W)	SHF	P.C.
20	16	5,340	3,898	0.73	1.49	5,100	3,723	0.73	1.60	4,860	3,548	0.73	1.73
20	18	5,760	3,514	0.61	1.53	5,580	3,404	0.61	1.64	5,220	3,184	0.61	1.77
20	20	6,240	3,058	0.49	1.57	6,000	2,940	0.49	1.67	5,640	2,764	0.49	1.80
22	16	5,340	4,325	0.81	1.49	5,100	4,131	0.81	1.60	4,860	3,937	0.81	1.73
22	18	5,760	3,974	0.69	1.53	5,580	3,850	0.69	1.64	5,220	3,602	0.69	1.77
22	20	6,240	3,557	0.57	1.57	6,000	3,420	0.57	1.67	5,640	3,215	0.57	1.80
24	16	5,340	4,753	0.89	1.49	5,100	4,539	0.89	1.60	4,860	4,325	0.89	1.73
24	18	5,760	4,435	0.77	1.53	5,580	4,297	0.77	1.64	5,220	4,019	0.77	1.77
24	20	6,240	4,056	0.65	1.57	6,000	3,900	0.65	1.67	5,640	3,666	0.65	1.80
24	22	6,720	3,562	0.53	1.60	6,480	3,434	0.53	1.72	6,120	3,244	0.53	1.83
26	16	5,340	5,180	0.97	1.49	5,100	4,947	0.97	1.60	4,860	4,714	0.97	1.73
26	18	5,760	4,896	0.85	1.53	5,580	4,743	0.85	1.64	5,220	4,437	0.85	1.77
26	20	6,240	4,555	0.73	1.57	6,000	4,380	0.73	1.67	5,640	4,117	0.73	1.80
26	22	6,720	4,099	0.61	1.60	6,480	3,953	0.61	1.72	6,120	3,733	0.61	1.83
27	16	5,340	5,340	1.00	1.49	5,100	5,100	1.00	1.60	4,860	4,860	1.00	1.73
27	18	5,760	5,126	0.89	1.53	5,580	4,966	0.89	1.64	5,220	4,646	0.89	1.77
27	20	6,240	4,805	0.77	1.57	6,000	4,620	0.77	1.67	5,640	4,343	0.77	1.80
27	22	6,720	4,368	0.65	1.60	6,480	4,212	0.65	1.72	6,120	3,978	0.65	1.83
28	16	5,340	5,340	1.00	1.49	5,100	5,100	1.00	1.60	4,860	4,860	1.00	1.73
28	18	5,760	5,357	0.93	1.53	5,580	5,189	0.93	1.64	5,220	4,855	0.93	1.77
28	20	6,240	5,054	0.81	1.57	6,000	4,860	0.81	1.67	5,640	4,568	0.81	1.80
28	22	6,720	4,637	0.69	1.60	6,480	4,471	0.69	1.72	6,120	4,223	0.69	1.83
30	16	5,340	5,340	1.00	1.49	5,100	5,100	1.00	1.60	4,860	4,860	1.00	1.73
30	18	5,760	5,760	1.00	1.53	5,580	5,580	1.00	1.64	5,220	5,220	1.00	1.77
30	20	6,240	5,554	0.89	1.57	6,000	5,340	0.89	1.67	5,640	5,020	0.89	1.80
30	22	6,720	5,174	0.77	1.60	6,480	4,990	0.77	1.72	6,120	4,712	0.77	1.83
32	16	5,340	5,340	1.00	1.49	5,100	5,100	1.00	1.60	4,860	4,860	1.00	1.73
32	18	5,760	5,760	1.00	1.53	5,580	5,580	1.00	1.64	5,220	5,220	1.00	1.77
32	20	6,240	6,053	0.97	1.57	6,000	5,820	0.97	1.67	5,640	5,471	0.97	1.80
32	22	6,720	5,712	0.85	1.60	6,480	5,508	0.85	1.72	6,120	5,202	0.85	1.83
34	16	5,340	5,340	1.00	1.49	5,100	5,100	1.00	1.60	4,860	4,860	1.00	1.73
34	18	5,760	5,760	1.00	1.53	5,580	5,580	1.00	1.64	5,220	5,220	1.00	1.77
34	20	6,240	6,240	1.00	1.57	6,000	6,000	1.00	1.67	5,640	5,640	1.00	1.80
34	22	6,720	6,250	0.93	1.60	6,480	6,026	0.93	1.72	6,120	5,692	0.93	1.83

CA : Capacity (W)
P.C. : Power consumption (kW)
SHC(W) : Sensible heat capacity
SHF : Sensible heat factor

COOLING CAPACITY
PKA-RP3FAL / PUHZ-RP3VHA

(230V)

Indoor Intake air D.B.(°C)	Indoor Intake air W.B.(°C)	Outdoor intake air D.B.(°C)											
		20				25				30			
		CA	SHC(W)	SHF	P.C.	CA	SHC(W)	SHF	P.C.	CA	SHC(W)	SHF	P.C.
20	16	7,029	4,709	0.67	1.58	6,816	4,567	0.67	1.67	6,603	4,424	0.67	1.77
20	18	7,526	4,139	0.55	1.61	7,313	4,022	0.55	1.70	7,065	3,885	0.55	1.82
20	20	8,094	3,480	0.43	1.66	7,917	3,404	0.43	1.74	7,704	3,313	0.43	1.86
22	16	7,029	5,272	0.75	1.58	6,816	5,112	0.75	1.67	6,603	4,952	0.75	1.77
22	18	7,526	4,741	0.63	1.61	7,313	4,607	0.63	1.70	7,065	4,451	0.63	1.82
22	20	8,094	4,128	0.51	1.66	7,917	4,037	0.51	1.74	7,704	3,929	0.51	1.86
24	16	7,029	5,834	0.83	1.58	6,816	5,657	0.83	1.67	6,603	5,480	0.83	1.77
24	18	7,526	5,343	0.71	1.61	7,313	5,192	0.71	1.70	7,065	5,016	0.71	1.82
24	20	8,094	4,775	0.59	1.66	7,917	4,671	0.59	1.74	7,704	4,545	0.59	1.86
24	22	8,627	4,054	0.47	1.70	8,449	3,971	0.47	1.80	8,236	3,871	0.47	1.92
26	16	7,029	6,396	0.91	1.58	6,816	6,203	0.91	1.67	6,603	6,009	0.91	1.77
26	18	7,526	5,946	0.79	1.61	7,313	5,777	0.79	1.70	7,065	5,581	0.79	1.82
26	20	8,094	5,423	0.67	1.66	7,917	5,304	0.67	1.74	7,704	5,161	0.67	1.86
26	22	8,627	4,745	0.55	1.70	8,449	4,647	0.55	1.80	8,236	4,530	0.55	1.92
27	16	7,029	6,678	0.95	1.58	6,816	6,475	0.95	1.67	6,603	6,273	0.95	1.77
27	18	7,526	6,247	0.83	1.61	7,313	6,070	0.83	1.70	7,,065	5,864	0.83	1.82
27	20	8,094	5,747	0.71	1.66	7,917	5,621	0.71	1.74	7,704	5,469	0.71	1.86
27	22	8,627	5,090	0.59	1.70	8,449	4,985	0.59	1.80	8,236	4,859	0.59	1.92
28	16	7,029	6,959	0.99	1.58	6,816	6,748	0.99	1.67	6,603	6,537	0.99	1.77
28	18	7,526	6,548	0.87	1.61	7,313	6,362	0.87	1.70	7,065	6,146	0.87	1.82
28	20	8,094	6,071	0.75	1.66	7,917	5,937	0.75	1.74	7,704	5,778	0.75	1.86
28	22	8,627	5,435	0.63	1.70	8,449	5,323	0.63	1.80	8,236	5,189	0.63	1.92
30	16	7,029	7,029	1.00	1.58	6,816	6,816	1.00	1.67	6,603	6,603	1.00	1.77
30	18	7,526	7,150	0.95	1.61	7,313	6,947	0.95	1.70	7,065	6,711	0.95	1.82
30	20	8,094	6,718	0.83	1.66	7,917	6,571	0.83	1.74	7,704	6,394	0.83	1.86
30	22	8,627	6,125	0.71	1.70	8,449	5,999	0.71	1.80	8,236	5,848	0.71	1.92
32	16	7,029	7,029	1.00	1.58	6,816	6,816	1.00	1.67	6,603	6,603	1.00	1.77
32	18	7,526	7,526	1.00	1.61	7,313	7,313	1.00	1.70	7,065	7,065	1.00	1.82
32	20	8,094	7,366	0.91	1.66	7,917	7,204	0.91	1.74	7,704	7,010	0.91	1.86
32	22	8,627	6,815	0.79	1.70	8,449	6,675	0.79	1.80	8,236	6,506	0.79	1.92
34	16	7,029	7,029	1.00	1.58	6,816	6,816	1.00	1.67	6,603	6,603	1.00	1.77
34	18	7,526	7,526	1.00	1.61	7,313	7,313	1.00	1.70	7,065	7,065	1.00	1.82
34	20	8,094	8,013	0.99	1.66	7,917	7,837	0.99	1.74	7,704	7,626	0.99	1.86
34	22	8,627	7,505	0.87	1.70	8,449	7,351	0.87	1.80	8,236	7,165	0.87	1.92

CA : Capacity (W)
P.C. : Power consumption (kW)
SHC(W) : Sensible heat capacity
SHF : Sensible heat factor

COOLING CAPACITY
PKA-RP3FAL / PUHZ-RP3VHA

(230V)

Indoor Intake air D.B.(°C)	Indoor Intake air W.B.(°C)	Outdoor intake air D.B.(°C)											
		35				40				45			
		CA	SHC(W)	SHF	P.C.	CA	SHC(W)	SHF	P.C.	CA	SHC(W)	SHF	P.C.
20	16	6,319	4,234	0.67	1.90	6,035	4,043	0.67	2.04	5,751	3,853	0.67	2.21
20	18	6,816	3,749	0.55	1.95	6,603	3,632	0.55	2.10	6,177	3,397	0.55	2.26
20	20	7,384	3,175	0.43	2.00	7,100	3,053	0.43	2.14	6,674	2,870	0.43	2.30
22	16	6,319	4,739	0.75	1.90	6,035	4,526	0.75	2.04	5,751	4,313	0.75	2.21
22	18	6,816	4,294	0.63	1.95	6,603	4,160	0.63	2.10	6,177	3,892	0.63	2.26
22	20	7,384	3,766	0.51	2.00	7,100	3,621	0.51	2.14	6,674	3,404	0.51	2.30
24	16	6,319	5,245	0.83	1.90	6,035	5,009	0.83	2.04	5,751	4,773	0.83	2.21
24	18	6,816	4,839	0.71	1.95	6,603	4,688	0.71	2.10	6,177	4,386	0.71	2.26
24	20	7,384	4,357	0.59	2.00	7,100	4,189	0.59	2.14	6,674	3,938	0.59	2.30
24	22	7,952	3,737	0.47	2.04	7,668	3,604	0.47	2.20	7,242	3,404	0.47	2.34
26	16	6,319	5,750	0.91	1.90	6,035	5,492	0.91	2.04	5,751	5,233	0.91	2.21
26	18	6,816	5,385	0.79	1.95	6,603	5,216	0.79	2.10	6,177	4,880	0.79	2.26
26	20	7,384	4,947	0.67	2.00	7,100	4,757	0.67	2.14	6,674	4,472	0.67	2.30
26	22	7,952	4,374	0.55	2.04	7,668	4,217	0.55	2.20	7,242	3,983	0.55	2.34
27	16	6,319	6,003	0.95	1.90	6,035	5,733	0.95	2.04	5,751	5,463	0.95	2.21
27	18	6,816	5,657	0.83	1.95	6,603	5,480	0.83	2.10	6,177	5,127	0.83	2.26
27	20	7,384	5,243	0.71	2.00	7,100	5,041	0.71	2.14	6,674	4,739	0.71	2.30
27	22	7,952	4,692	0.59	2.04	7,668	4,524	0.59	2.20	7,242	4,273	0.59	2.34
28	16	6,319	6,256	0.99	1.90	6,035	5,975	0.99	2.04	5,751	5,693	0.99	2.21
28	18	6,816	5,930	0.87	1.95	6,603	5,745	0.87	2.10	6,177	5,374	0.87	2.26
28	20	7,384	5,538	0.75	2.00	7,100	5,325	0.75	2.14	6,674	5,006	0.75	2.30
28	22	7,952	5,010	0.63	2.04	7,668	4,831	0.63	2.20	7,242	4,562	0.63	2.34
30	16	6,319	6,319	1.00	1.90	6,035	6,035	1.00	2.04	5,751	5,751	1.00	2.21
30	18	6,816	6,475	0.95	1.95	6,603	6,273	0.95	2.10	6,177	5,868	0.95	2.26
30	20	7,384	6,129	0.83	2.00	7,100	5,893	0.83	2.14	6,674	5,539	0.83	2.30
30	22	7,952	5,646	0.71	2.04	7,668	5,444	0.71	2.20	7,242	5,142	0.71	2.34
32	16	6,319	6,319	1.00	1.90	6,035	6,035	1.00	2.04	5,751	5,751	1.00	2.21
32	18	6,816	6,816	1.00	1.95	6,603	6,603	1.00	2.10	6,177	6,177	1.00	2.26
32	20	7,384	6,719	0.91	2.00	7,100	6,461	0.91	2.14	6,674	6,073	0.91	2.30
32	22	7,952	6,282	0.79	2.04	7,668	6,058	0.79	2.20	7,242	5,721	0.79	2.34
34	16	6,319	6,319	1.00	1.90	6,035	6,035	1.00	2.04	5,751	5,751	1.00	2.21
34	18	6,816	6,816	1.00	1.95	6,603	6,603	1.00	2.10	6,177	6,177	1.00	2.26
34	20	7,384	7,310	0.99	2.00	7,100	7,029	0.99	2.14	6,674	6,607	0.99	2.30
34	22	7,952	6,918	0.87	2.04	7,668	6,671	0.87	2.20	7,242	6,301	0.87	2.34

CA : Capacity (W)
P.C. : Power consumption (kW)
SHC(W) : Sensible heat capacity
SHF : Sensible heat factor

COOLING CAPACITY
PKA-RP4FAL / PUHZ-RP4VHA

(230V)

Indoor Intake air D.B.(°C)	Indoor Intake air W.B.(°C)	Outdoor intake air D.B.(°C)											
		20				25				30			
		CA	SHC(W)	SHF	P.C.	CA	SHC(W)	SHF	P.C.	CA	SHC(W)	SHF	P.C.
20	16	9,900	6,039	0.61	2.34	9,600	5,856	0.61	2.48	9,300	5,673	0.61	2.62
20	18	10,600	5,194	0.49	2.39	10,300	5,047	0.49	2.52	9,950	4,876	0.49	2.70
20	20	11,400	4,218	0.37	2.46	11,150	4,126	0.37	2.58	10,850	4,015	0.37	2.75
22	16	9,900	6,831	0.69	2.34	9,600	6,624	0.69	2.48	9,300	6,417	0.69	2.62
22	18	10,600	6,042	0.57	2.39	10,300	5,871	0.57	2.52	9,950	5,672	0.57	2.70
22	20	11,400	5,130	0.45	2.46	11,150	5,018	0.45	2.58	10,850	4,883	0.45	2.75
24	16	9,900	7,623	0.77	2.34	9,600	7,392	0.77	2.48	9,300	7,161	0.77	2.62
24	18	10,600	6,890	0.65	2.39	10,300	6,695	0.65	2.52	9,950	6,468	0.65	2.70
24	20	11,400	6,042	0.53	2.46	11,150	5,910	0.53	2.58	10,850	5,751	0.53	2.75
24	22	12,150	4,982	0.41	2.52	11,900	4,879	0.41	2.67	11,600	4,756	0.41	2.84
26	16	9,900	8,415	0.85	2.34	9,600	8,160	0.85	2.48	9,300	7,905	0.85	2.62
26	18	10,600	7,738	0.73	2.39	10,300	7,519	0.73	2.52	9,950	7,264	0.73	2.70
26	20	11,400	6,954	0.61	2.46	11,150	6,802	0.61	2.58	10,850	6,619	0.61	2.75
26	22	12,150	5,954	0.49	2.52	11,900	5,831	0.49	2.67	11,600	5,684	0.49	2.84
27	16	9,900	8,811	0.89	2.34	9,600	8,544	0.89	2.48	9,300	8,277	0.89	2.62
27	18	10,600	8,162	0.77	2.39	10,300	7,931	0.77	2.52	9,950	7,662	0.77	2.70
27	20	11,400	7,410	0.65	2.46	11,150	7,248	0.65	2.58	10,850	7,053	0.65	2.75
27	22	12,150	6,440	0.53	2.52	11,900	6,307	0.53	2.67	11,600	6,148	0.53	2.84
28	16	9,900	9,207	0.93	2.34	9,600	8,928	0.93	2.48	9,300	8,649	0.93	2.62
28	18	10,600	8,586	0.81	2.39	10,300	8,343	0.81	2.52	9,950	8,060	0.81	2.70
28	20	11,400	7,866	0.69	2.46	11,150	7,694	0.69	2.58	10,850	7,487	0.69	2.75
28	22	12,150	6,926	0.57	2.52	11,900	6,783	0.57	2.67	11,600	6,612	0.57	2.84
30	16	9,900	9,900	1.00	2.34	9,600	9,600	1.00	2.48	9,300	9,300	1.00	2.62
30	18	10,600	9,434	0.89	2.39	10,300	9,167	0.89	2.52	9,950	8,856	0.89	2.70
30	20	11,400	8,778	0.77	2.46	11,150	8,586	0.77	2.58	10,850	8,355	0.77	2.75
30	22	12,150	7,898	0.65	2.52	11,900	7,735	0.65	2.67	11,600	7,540	0.65	2.84
32	16	9,900	9,900	1.00	2.34	9,600	9,600	1.00	2.48	9,300	9,300	1.00	2.62
32	18	10,600	10,282	0.97	2.39	10,300	9,991	0.97	2.52	9,950	9,652	0.97	2.70
32	20	11,400	9,690	0.85	2.46	11,150	9,478	0.85	2.58	10,850	9,223	0.85	2.75
32	22	12,150	8,870	0.73	2.52	11,900	8,687	0.73	2.67	11,600	8,468	0.73	2.84
34	16	9,900	9,900	1.00	2.34	9,600	9,600	1.00	2.48	9,300	9,300	1.00	2.62
34	18	10,600	10,600	1.00	2.39	10,300	10,300	1.00	2.52	9,950	9,950	1.00	2.70
34	20	11,400	10,602	0.93	2.46	11,150	10,370	0.93	2.58	10,850	10,091	0.93	2.75
34	22	12,150	9,842	0.81	2.52	11,900	9,639	0.81	2.67	11,600	9,396	0.81	2.84

CA : Capacity (W)
P.C. : Power consumption (kW)
SHC(W) : Sensible heat capacity
SHF : Sensible heat factor

COOLING CAPACITY
PKA-RP4FAL / PUHZ-RP4VHA

(230V)

Indoor Intake air D.B.(°C)	Indoor Intake air W.B.(°C)	Outdoor intake air D.B.(°C)											
		35				40				45			
		CA	SHC(W)	SHF	P.C.	CA	SHC(W)	SHF	P.C.	CA	SHC(W)	SHF	P.C.
20	16	8,900	5,429	0.61	2.81	8,500	5,185	0.61	3.02	8,100	4,941	0.61	3.27
20	18	9,600	4,704	0.49	2.89	9,300	4,557	0.49	3.11	8,700	4,263	0.49	3.34
20	20	10,400	3,848	0.37	2.96	10,000	3,700	0.37	3.16	9,400	3,478	0.37	3.40
22	16	8,900	6,141	0.69	2.81	8,500	5,865	0.69	3.02	8,100	5,589	0.69	3.27
22	18	9,600	5,472	0.57	2.89	9,300	5,301	0.57	3.11	8,700	4,959	0.57	3.34
22	20	10,400	4,680	0.45	2.96	10,000	4,500	0.45	3.16	9,400	4,230	0.45	3.40
24	16	8,900	6,853	0.77	2.81	8,500	6,545	0.77	3.02	8,100	6,237	0.77	3.27
24	18	9,600	6,240	0.65	2.89	9,300	6,045	0.65	3.11	8,700	5,655	0.65	3.34
24	20	10,400	5,512	0.53	2.96	10,000	5,300	0.53	3.16	9,400	4,982	0.53	3.40
24	22	11,200	4,592	0.41	3.02	10,800	4,428	0.41	3.25	10,200	4,182	0.41	3.46
26	16	8,900	7,565	0.85	2.81	8,500	7,225	0.85	3.02	8,100	6,885	0.85	3.27
26	18	9,600	7,008	0.73	2.89	9,300	6,789	0.73	3.11	8,700	6,351	0.73	3.34
26	20	10,400	6,344	0.61	2.96	10,000	6,100	0.61	3.16	9,400	5,734	0.61	3.40
26	22	11,200	5,488	0.49	3.02	10,800	5,292	0.49	3.25	10,200	4,998	0.49	3.46
27	16	8,900	7,921	0.89	2.81	8,500	7,565	0.89	3.02	8,100	7,209	0.89	3.27
27	18	9,600	7,392	0.77	2.89	9,300	7,161	0.77	3.11	8,700	6,699	0.77	3.34
27	20	10,400	6,760	0.65	2.96	10,000	6,500	0.65	3.16	9,400	6,110	0.65	3.40
27	22	11,200	5,936	0.53	3.02	10,800	5,724	0.53	3.25	10,200	5,406	0.53	3.46
28	16	8,900	8,277	0.93	2.81	8,500	7,905	0.93	3.02	8,100	7,533	0.93	3.27
28	18	9,600	7,776	0.81	2.89	9,300	7,533	0.81	3.11	8,700	7,047	0.81	3.34
28	20	10,400	7,176	0.69	2.96	10,000	6,900	0.69	3.16	9,400	6,486	0.69	3.40
28	22	11,200	6,384	0.57	3.02	10,800	6,156	0.57	3.25	10,200	5,814	0.57	3.46
30	16	8,900	8,900	1.00	2.81	8,500	8,500	1.00	3.02	8,100	8,100	1.00	3.27
30	18	9,600	8,544	0.89	2.89	9,300	8,277	0.89	3.11	8,700	7,743	0.89	3.34
30	20	10,400	8,008	0.77	2.96	10,000	7,700	0.77	3.16	9,400	7,238	0.77	3.40
30	22	11,200	7,280	0.65	3.02	10,800	7,020	0.65	3.25	10,200	6,630	0.65	3.46
32	16	8,900	8,900	1.00	2.81	8,500	8,500	1.00	3.02	8,100	8,100	1.00	3.27
32	18	9,600	9,312	0.97	2.89	9,300	9,021	0.97	3.11	8,700	8,439	0.97	3.34
32	20	10,400	8,840	0.85	2.96	10,000	8,500	0.85	3.16	9,400	7,990	0.85	3.40
32	22	11,200	8,176	0.73	3.02	10,800	7,884	0.73	3.25	10,200	7,446	0.73	3.46
34	16	8,900	8,900	1.00	2.81	8,500	8,500	1.00	3.02	8,100	8,100	1.00	3.27
34	18	9,600	9,600	1.00	2.89	9,300	9,300	1.00	3.11	8,700	8,700	1.00	3.34
34	20	10,400	9,672	0.93	2.96	10,000	9,300	0.93	3.16	9,400	8,742	0.93	3.40
34	22	11,200	9,072	0.81	3.02	10,800	8,748	0.81	3.25	10,200	8,262	0.81	3.46

CA : Capacity (W)
P.C. : Power consumption (kW)
SHC(W) : Sensible heat capacity
SHF : Sensible heat factor

HEATING CAPACITY

PKA-RP•GAL / PUHZ-RP•VHA
PKA-RP•FAL / PUHZ-RP•VHA

(230V)

Service Ref.	Indoor intake are D.B. (˚C)	Outdoor intake air W.B. (˚C)											
		-10		-5		0		5		10		15	
		CA	P.C.	CA	P.C.	CA	P.C.	CA	P.C.	CA	P.C.	CA	P.C.
PKA-RP1.6GAL	15	2,604	0.75	2,829	0.83	3,157	0.95	4,141	1.14	4,674	1.27	5,207	1.37
	20	2,501	0.81	2,706	0.89	2,993	1.03	3,998	1.23	4,510	1.37	5,023	1.47
	25	2,419	0.86	2,624	0.97	2,870	1.12	3,772	1.31	4,346	1.47	4,838	1.58
PKA-RP2GAL	15	2,858	0.83	3,105	0.91	3,465	1.05	4,545	1.26	5,130	1.40	5,715	1.51
	20	2,745	0.90	2,970	0.98	3,285	1.13	4,388	1.36	4,950	1.51	5,513	1.62
	25	2,655	0.95	2,880	1.06	3,150	1.23	4,140	1.44	4,770	1.62	5,310	1.74
PKA-RP2.5FAL	15	4,445	1.19	4,830	1.31	5,390	1.51	7,070	1.81	7,980	2.01	8,890	2.17
	20	4,270	1.29	4,620	1.41	5,110	1.63	6,825	1.95	7,700	2.17	8,575	2.33
	25	4,130	1.37	4,480	1.53	4,900	1.77	6,440	2.07	7,420	2.32	8,260	2.50
PKA-RP3FAL	15	5,080	1.42	5,520	1.56	6,160	1.80	8,080	2.16	9,120	2.40	10,160	2.59
	20	4,880	1.54	5,280	1.68	5,840	1.94	7,800	2.33	8,800	2.59	9,800	2.78
	25	4,720	1.63	5,120	1.82	5,600	2.11	7,360	2.47	8,480	2.77	9,440	2.99
PKA-RP4FAL	15	7,112	1.92	7,728	2.11	8,624	2.44	11,312	2.93	12,768	3.25	14,224	3.51
	20	6,832	2.08	7,392	2.28	8,176	2.63	10,920	3.15	12,320	3.51	13,720	3.77
	25	6,608	2.21	7,168	2.47	7,840	2.86	10,304	3.35	11,872	3.75	13,216	4.05

NOTE: CA: Capacity (W) P.C.: Power consumption (kW)

A.2.6.2 PERFORMANCE CURVES

Cooling performance curve(50Hz)

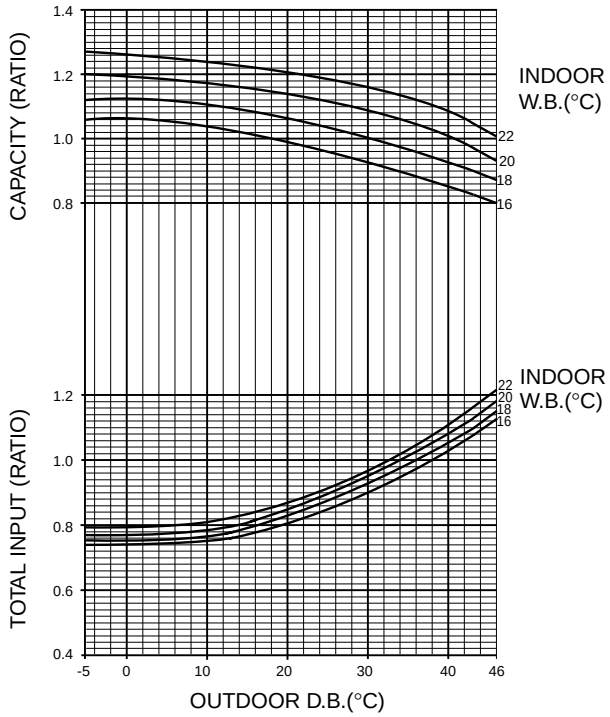

Heating performance curve(50Hz)

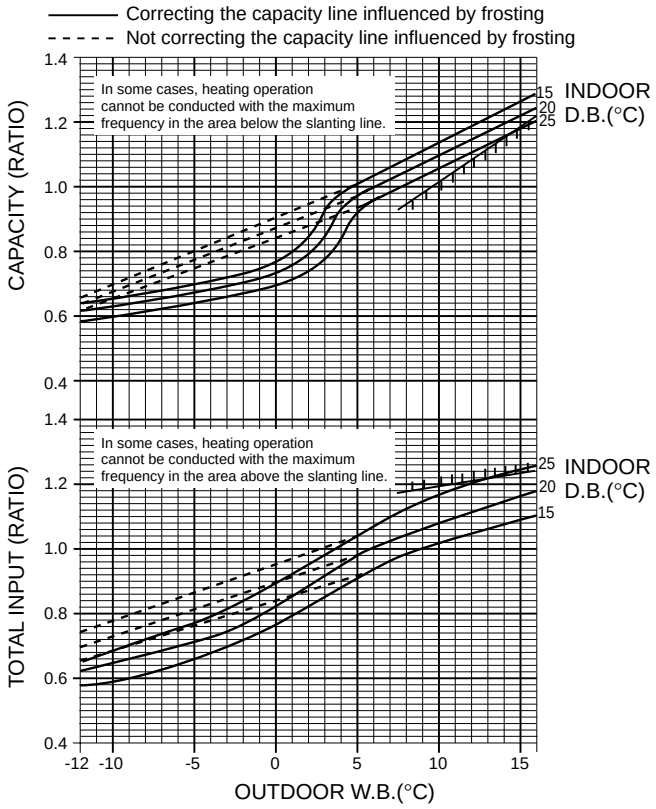

A.2.7 NOISE CRITERIA CURVES

PKA-RP1.6GAL
PKA-RP2GAL

NOTCH	SPL(dB)	LINE
Hi	43	○——○
Mi1	41	△——△
Mi2	38	●——●
Lo	36	▲——▲

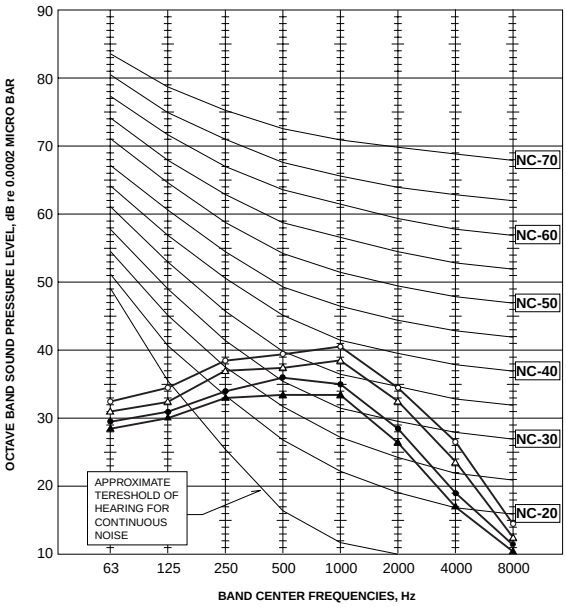

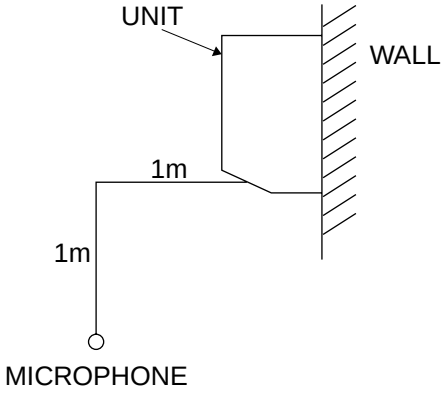

PKA-RP2.5FAL
PKA-RP3FAL

NOTCH	SPL(dB)	LINE
Hi	45	○——○
Lo	39	●——●

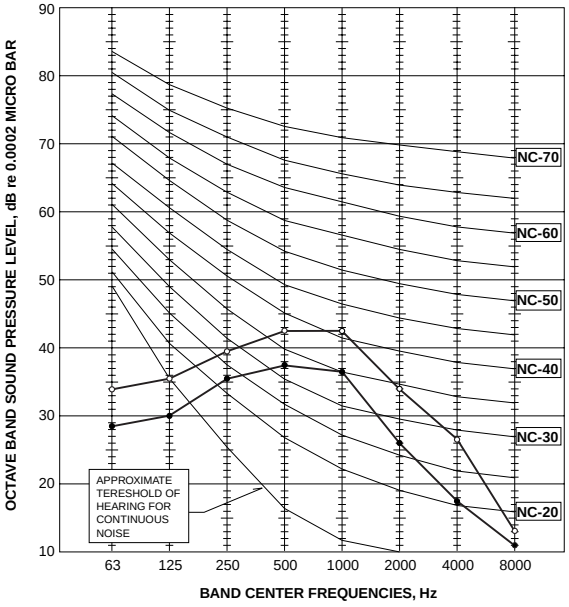

PKA-RP4FAL

NOTCH	SPL(dB)	LINE
Hi	46	○——○
Lo	41	●——●

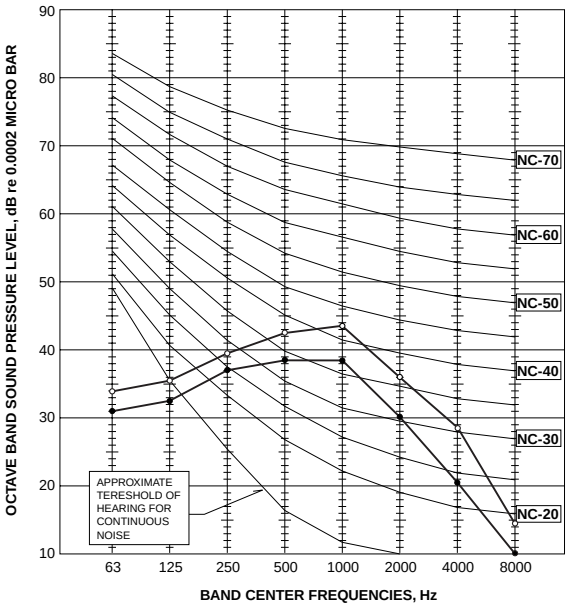

A.2.8 OUTLET AIR SPEED AND COVERAGE RANGE

	PKA-RP1.6GAL	PKA-RP2GAL	PKA-RP2.5FAL	PKA-RP3FAL	PKA-RP4FAL
Air flow m^3/min	12	12	20	20	28
Air speed m/sec	5.3	5.3	4.9	4.9	5.4
Coverage range m (ft)	10(32.8)	10(32.8)	12.4(40.7)	12.4(40.7)	15.3(50.2)

A.2.9 TEMPERATURE AND AIR FLOW DISTRIBUTIONS

PKA-RP・GAL
PKA-RP・FAL

Temperature distribution

<Cooling mode>
Flow angle : 10°
Notch : Hi

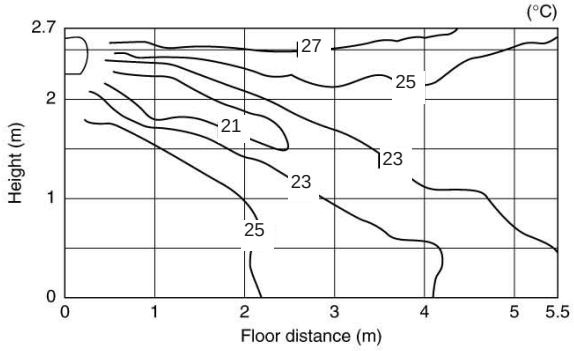

<Heating mode>
Flow angle : 70°
Notch : Hi

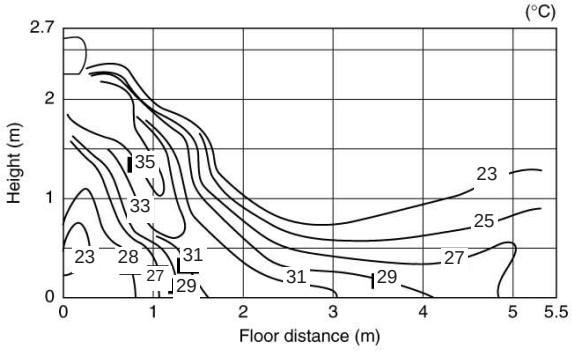

Air flow distribution

<Fan mode>
Flow angle : 10°
Notch : Hi

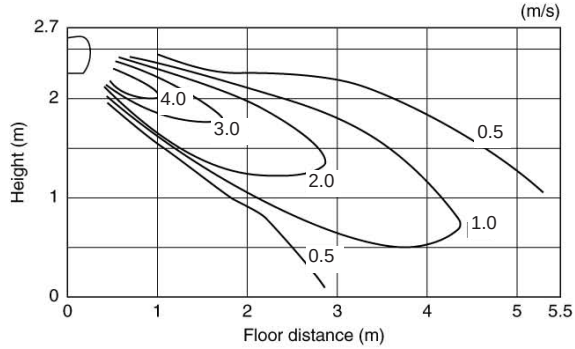

<Fan mode>
Flow angle : 70°
Notch : Hi

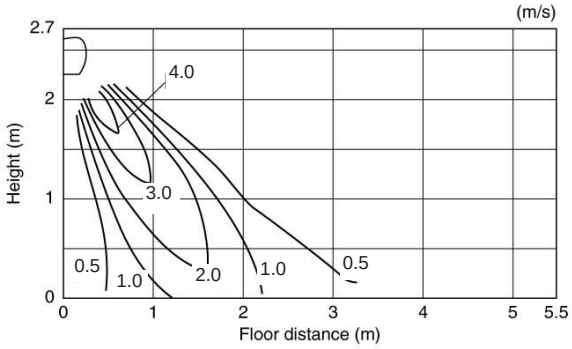

A.2.10 REMOTE CONTROLLER

●Wireless remote controller

● When cover is open.

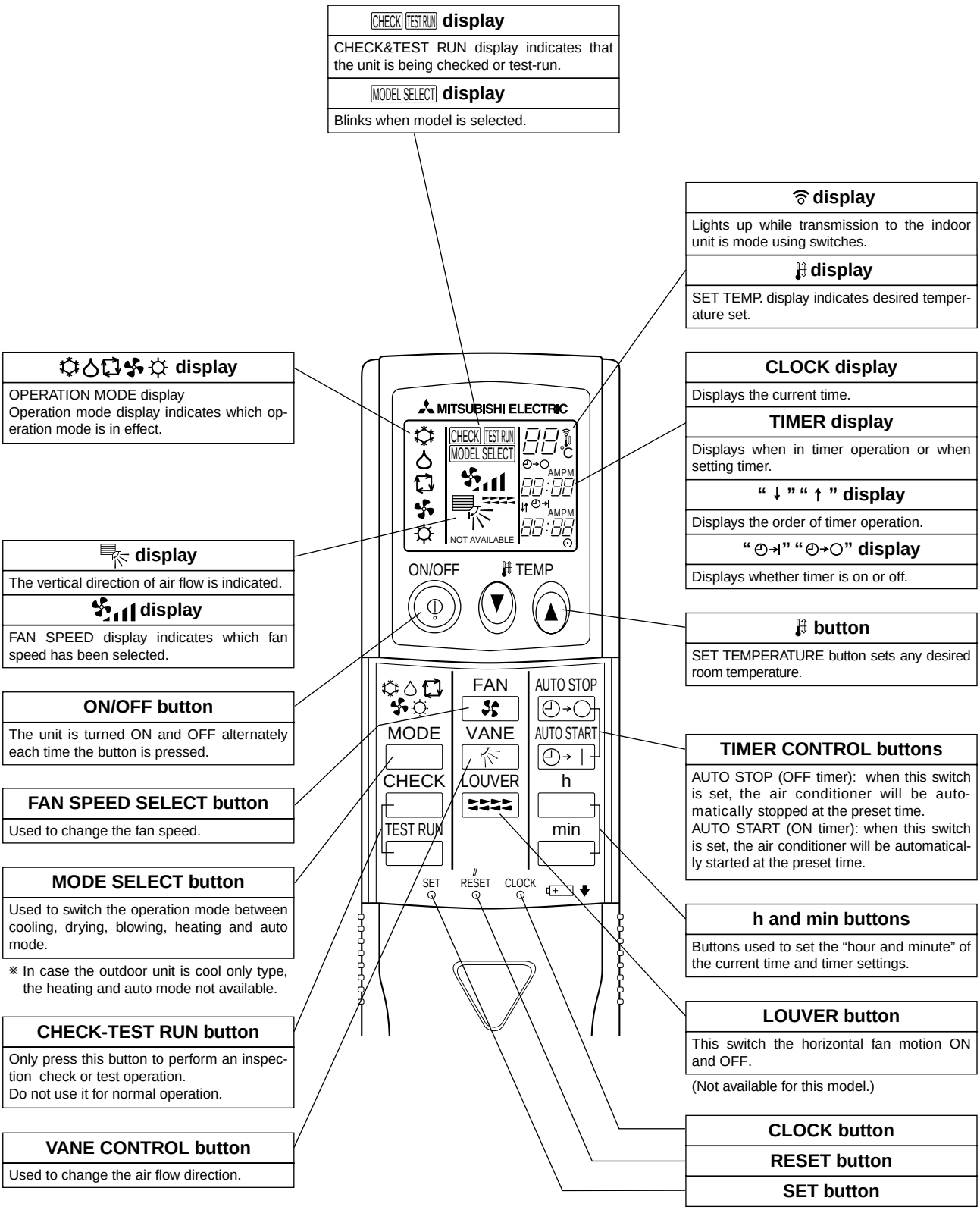

A.2.11 TROUBLESHOOTING

Before you call out a repair man, check the following table to see whether there is a simple solution to your problem.

[for wireless remote controller]

Problem	Solution	Problem	Solution
Unit does not operate at all.	Turn main power on. Then press the POWER ON/OFF button to turn the unit on.	Unit does not start immediately.	Wait until the unit restarts automatically. The compressor may hesitate resuming because a three-minute resume prevention circuit is incorporated in the outdoor unit for protection of the compressor.
	Wait until power is restored, then press the POWER ON/OFF button to turn the unit on.		

[for wired remote controller(option)]

Problem	Solution	Problem	Solution
Unit does not cool or heat very well.	Clean the filter.	CENTRALLY CONTROLLED is displayed in the remote controller.	The start and stop functions of the remote controller are not available when the CENTRALLY CONTROLLED message is lit.
The unit stops operating before arriving at the set temperature in the heating mode.	Frost forms when the outdoor temperature is low and humidity is high. Wait for about 10 minutes for the frost to melt.	The start and stop functions are not available just after restarting the unit.	Wait about three minutes (operation has stopped to prevent damage to the air conditioner).
The airflow direction suddenly changes.	After one hour of cooling-mode operation with the airflow in a downward direction, the unit will automatically change to the "Horizontal airflow" mode.	"H0" is displayed in the remote controller.	An automatic startup test is being performed (will last for about two minutes).
	When the unit is in the heating or defrosting mode, it will automatically change to the "Horizontal airflow mode".	An error code is displayed in the remote controller. The operating display of the wireless remote controller's receiver is flashing.	A self-diagnostic function is being performed to preserve the air conditioner. * Do not attempt to make repairs yourself. Turn the main switch off and contact the dealer from whom you bought the air conditioner. Provide him or her with the name of the unit and the information displayed in the remote controller.
A white mist is expelled from the indoor unit.	This may occur just after the unit is turned on when a high level of humidity is present in the room.		
The indicators of the remote controller do not light up when operated.	Turn on the power switch. " · " will be displayed.		

NOTE: After a power cut, the unit will not restart automatically. You will have to restart it by pressing the POWER - ON/OFF button on the remote controller.

If none of the above apply, turn the main switch off and contact the dealer from whom you bought the air-conditioner, telling him the model name and the nature of the problem. Do not try to fix the unit yourself.

In any of the following cases, turn off the main power switch and contact your local dealer for service:

- The operation lamp (on the main unit) flashes.
- The switches do not work properly.
- The circuit breaker trips frequently (or the fuse blows frequently).
- Water has accidentally been splashed into the unit.
- Water leaks from the unit.
- Something is accidentally dropped into the air-conditioner.
- An unusual noise is heard during operation.

Operating range

		Indoor air intake temperature	Outdoor air intake temperature
Cooling	Maximum	35 °C DB, 22.5 °C WB	46 °C DB
	Minimum	19 °C DB, 15 °C WB	–5 °C DB
Heating	Maximum	28 °C DB	21 °C DB, 15 °C WB
	Minimum	17 °C DB	–11 °C DB, –12 °C WB

The following do not indicate any malfunction:

Odours: smells such as tobacco or cosmetic odours may persist after they have been sucked into the unit.
Sound of liquid flowing inside indoor unit: this can occur during or after operation and is simply the sound of refrigerant being circulated inside the unit.
Ticking sound coming from indoor unit: this can occur when cooling or heating has just begun or has just stopped. It is caused by the indoor unit shrinking or expanding slightly due to the change in temperature.
The message "CENTRALLY CONTROLLED" appearing on the LCD panel: from time to time, this message may come up on the LCD panel. This does not indicate any malfunction.

Remote Controller Settings for Installing/Replacing Batteries and Restarting Operation (for wireless remote controller)

- Always press the reset button after installing or replacing batteries.
- The initial settings are used when installing or replacing batteries after which the settings for restarting are used.

	Initial Settings	Restarting		
Operating mode	Fan	Previous operating mode		
Temperature setting	—	Previous temperature setting		
Fan speed	High	Previous fan speed setting		
Airflow direction	Level	Operating mode	Cooling - Dry	Level
			Heating	Previous setting
			Fan	Level

NOTE: The refrigerant charged in the air conditioner is safe. Refrigerant normally does not leak, however, if refrigerant gas leaks indoors, and comes into contact with the fire of a fan heater, space heater, stove, etc., harmful substances will be generated.
Be sure to ask the service representative whether there is refrigerant leakage or not when repairs are carried out.

A.2.12 INSTALLATION PROCEDURE

1. Safety precautions

- ▶ **Before installing the unit, make sure you read all the "Safety precautions".**
- ▶ **Please report to your supply authority or obtain their consent before connecting this equipment to the power supply system.**

⚠ **Warning:**
Describes precautions that must be observed to prevent danger of injury or death to the user.

⚠ **Caution:**
Describes precautions that must be observed to prevent damage to the unit.

After installation work has been completed, explain the "Safety precautions," use, and maintenance of the unit to the customer according to the information in the Operation Manual and perform the test run to ensure normal operation. Both the Installation Manual and Operation Manual must be given to the user for keeping. These manuals must be passed on to subsequent users.

⃠ : Indicates an action that must be avoided.
❗ : Indicates that important instructions must be followed.
⏚ : Indicates a part which must be grounded.
⚠ : Indicates that caution should be taken with rotating parts.
: Indicates that the main switch must be turned off before servicing.
⚠ : Beware of electric shock.
⚠ : Beware of hot surface.
ELV: At servicing, please shut down the power supply for both the Indoor and Outdoor Unit.

⚠ **Warning:**
Carefully read the labels affixed to the main unit.

⚠ **Warning:**
- **Ask a dealer or an authorized technician to install the unit.**
- **For installation work, follow the instructions in the Installation Manual and use tools and pipe components specifically made for use with refrigerant specified in the outdoor unit installation manual.**
- **The unit must be installed according to the instructions in order to minimize the risk of damage from earthquakes, typhoons, or strong winds. An incorrectly installed unit may fall down and cause damage or injuries.**
- **The unit must be securely installed on a structure that can sustain its weight.**
- **If the air conditioner is installed in a small room, measures must be taken to prevent the refrigerant concentration in the room from exceeding the safety limit in the event of refrigerant leakage. Should the refrigerant leak and cause the concentration limit to be exceeded, hazards due to lack of oxygen in the room may result.**
- **Ventilate the room if refrigerant leaks during operation. If refrigerant comes into contact with a flame, poisonous gases will be released.**
- **All electric work must be performed by a qualified technician according to local regulations and the instructions given in this manual.**
- **Use only specified cables for wiring.**
- **The terminal block cover panel of the unit must be firmly attached.**
- **Use only accessories authorized by Mitsubishi Electric and ask a dealer or an authorized technician to install them.**
- **The user should never attempt to repair the unit or transfer it to another location.**
- **After installation has been completed, check for refrigerant leaks. If refrigerant leaks into the room and comes into contact with the flame of a heater or portable cooking range, poisonous gases will be released.**

1.1. Before installation (Environment)

⚠ **Caution:**
- **Do not use the unit in an unusual environment. If the air conditioner is installed in areas exposed to steam, volatile oil (including machine oil), or sulfuric gas, areas exposed to high salt content such as the seaside, the performance can be significantly reduced and the internal parts can be damaged.**
- **Do not install the unit where combustible gases may leak, be produced, flow, or accumulate. If combustible gas accumulates around the unit, fire or explosion may result.**
- **Do not keep food, plants, caged pets, artwork, or precision instruments in the direct airflow of the indoor unit or too close to the unit as these items can be damaged by temperature changes or dripping water.**
- **When the room humidity exceeds 80% or when the drainpipe is clogged, water may drip from the indoor unit. Do not install the indoor unit where such dripping can cause damage.**
- **When installing the unit in a hospital or communications office, be prepared for noise and electronic interference. Inverters, home appliances, high-frequency medical equipment, and radio communications equipment can cause the air conditioner to malfunction or breakdown. The air conditioner may also affect medical equipment, disturbing medical care, and communications equipment, harming the screen display quality.**

1.2. Before installation or relocation

⚠ **Caution:**
- **Be extremely careful when transporting the units. Two or more persons are needed to handle the unit as it weighs 20 kg or more. Do not grasp the packaging bands. Wear protective gloves as you can injure your hands on the fins or other parts.**
- **Be sure to safely dispose of the packaging materials. Packaging materials, such as nails and other metal or wooden parts may cause stabs or other injuries.**
- **Thermal insulation of the refrigerant pipe is necessary to prevent condensation. If the refrigerant pipe is not properly insulated, condensation will be formed.**
- **Place thermal insulation on the pipes to prevent condensation. If the drainpipe is installed incorrectly, water leakage and damage to the ceiling, floor, furniture, or other possessions may result.**
- **Do not clean the air conditioner unit with water. Electric shock may result.**
- **Tighten all flare nuts to specification using a torque wrench. If tightened too much, the flare nut can break after an extended period.**

1.3. Before electric work

⚠ **Caution:**
- **Be sure to install circuit breakers. If not installed, electric shock may result.**
- **For the power lines, use standard cables of sufficient capacity. Otherwise, a short circuit, overheating, or fire may result.**
- **When installing the power lines, do not apply tension to the cables.**
- **Be sure to ground the unit. If the unit is not properly grounded, electric shock may result.**
- **Use circuit breakers (ground fault interrupter, isolating switch (+B fuse), and molded case circuit breaker) with the specified capacity. If the circuit breaker capacity is larger than the specified capacity, breakdown or fire may result.**

1.4. Before starting the test run

⚠ **Caution:**
- **Turn on the main power switch more than 12 hours before starting operation. Starting operation just after turning on the power switch can severely damage the internal parts.**
- **Before starting operation, check that all panels, guards and other protective parts are correctly installed. Rotating, hot, or high voltage parts can cause injuries.**
- **Do not operate the air conditioner without the air filter set in place. If the air filter is not installed, dust may accumulate and breakdown may result.**
- **Do not touch any switch with wet hands. Electric shock may result.**
- **Do not touch the refrigerant pipes with bare hands during operation.**
- **After stopping operation, be sure to wait at least five minutes before turning off the main power switch. Otherwise, water leakage or breakdown may result.**

2. Installation location

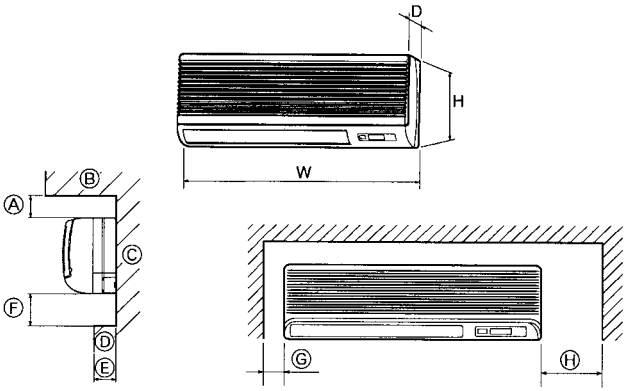

Fig. 2-1

2.1. Outline dimensions (Indoor unit) (Fig. 2-1)

Select a proper position allowing the following clearances for installation and maintenance.

(mm)

Models	W	D	H	Ⓐ	Ⓔ	Ⓕ	Ⓖ	Ⓗ
RP1.6, 2	990	235	340	Min. 30	Max. 130	Min. 180	Min. 50	Min. 150

Ⓑ Ceiling
Ⓒ Wall
Ⓓ Furnishing, etc

⚠ **Warning:**
Mount the indoor unit on a ceiling strong enough to withstand the weight of the unit.

2.2. Outline dimensions (Outdoor unit)

Refer to the outdoor unit installation manual.

3. Installing the indoor unit

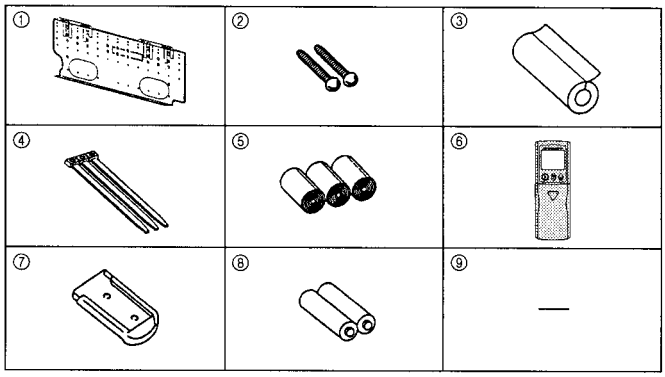

Fig. 3-1

3.1. Check the indoor unit accessories (Fig. 3-1)

The indoor unit should be supplied with the following accessories.

PART NUMBER	ACCESSORY	QUANTITY	LOCATION OF SETTING
①	Mount board	1	Fix at the back of the unit
②	Tapping screw 4 × 35	12	Set inside the unit
③	Pipe cover	1	
④	Band	3	
⑤	Felt tape	3	
⑥	Wireless remote controller	1	
⑦	Remocon holder	1	
⑧	Alkali batteries (size AAA)	2	
⑨	Mount piece	1	

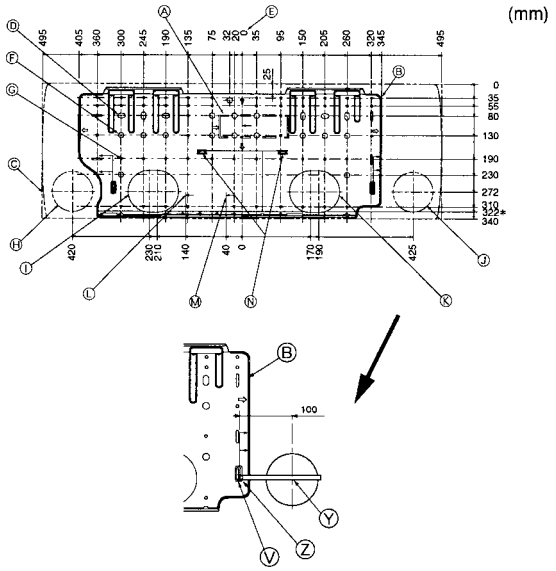

Fig. 3-2

3.2. Installing the wall mounting fixture (Fig. 3-2)

3.2.1. Setting the wall mounting fixture and piping positions

▶ **Using the wall mounting fixture, determine the unit's installation position and the locations of the piping holes to be drilled.**

⚠ **Warning:**
Before drilling a hole in the wall, you must consult the building contractor.

Ⓐ Supporting piece
Ⓑ Mount board
Ⓒ Main body
Ⓓ Slot (6-11 × 20)
Ⓔ Unit center
Ⓕ Bolt hole (14-ø14)
Ⓖ Tapping hole (49-ø5)
Ⓗ Bottom left pipe slot (ø90)
Ⓘ Bottom left pipe slot knockout hole
Ⓙ Bottom right pipe slot (ø90)
Ⓚ Bottom right pipe slot knockout hole
Ⓛ Liquid pipe flare connection position
Ⓜ Gas pipe flare connection position
Ⓝ Level setting standard
Ⓥ Insert scale.
Ⓨ Hole centre
Ⓩ Align the scale with the line.

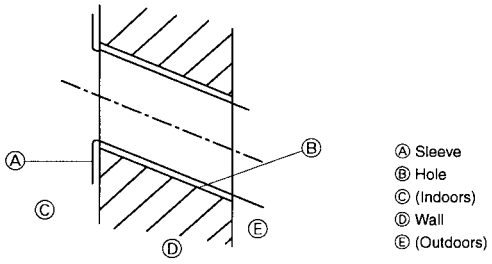

Ⓐ Sleeve
Ⓑ Hole
Ⓒ (Indoors)
Ⓓ Wall
Ⓔ (Outdoors)

Fig. 3-3

3.2.2. Drilling the piping hole (Fig. 3-3)

▶ **Use a core drill to make a hole of 90-100 mm diameter in the wall in the piping direction, at the position shown in the diagram to the left.**
▶ **The hole should incline so that the outside opening is lower than the inside opening.**
▶ **Insert a sleeve (with a 90 mm diameter and purchased locally) through the hole.**

Note:
The purpose of the hole's inclination is to promote drain flow.

3. Installing the indoor unit

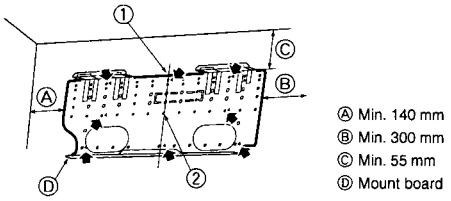

Fig. 3-4

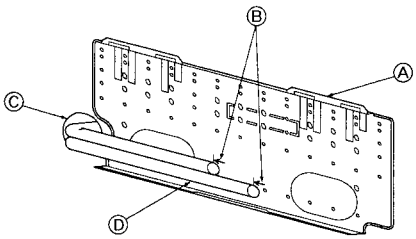

Fig. 3-5

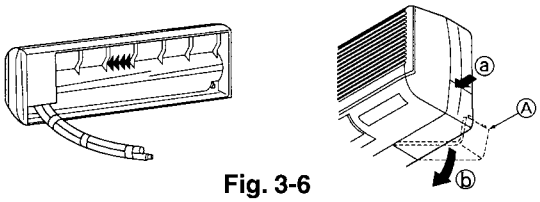

Fig. 3-6

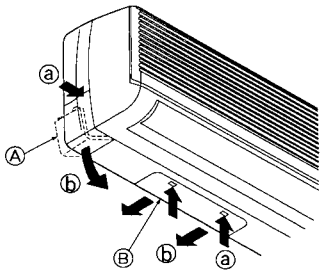

Fig. 3-7

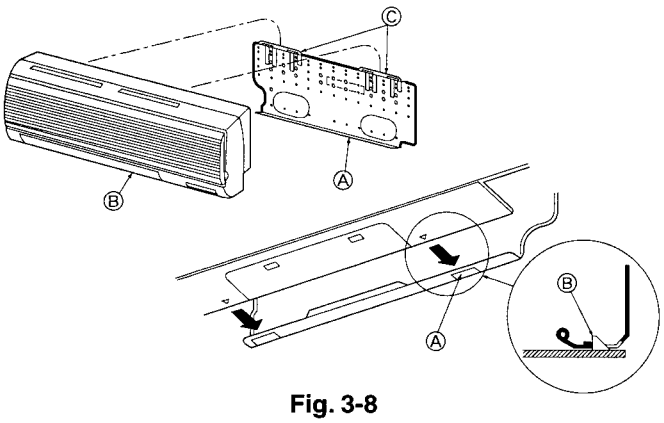

Fig. 3-8

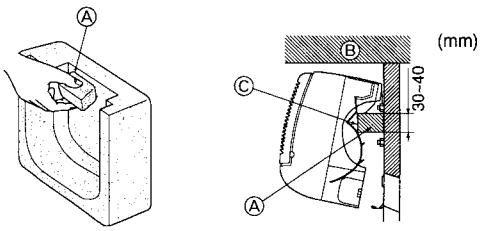

Fig. 3-9

3.2.3. Installing the wall mounting fixture

▶ **Since the indoor unit weighs near 30 kg, selection of the mounting location requires thorough consideration. If the wall does not seem to be strong enough, reinforce it with boards or beams before installation.**

▶ **The mounting fixture must be secured at both ends and at the centre, if possible. Never fix it at a single spot or in any nonsymetrical way.**
(If possible, secure the fixture at all the positions marked with a bold arrow.)
(Fig. 3-4)

⚠ **Warning:**
If possible, secure the fixture at all positions indicated with a bold arrow.

⚠ **Caution:**
- **The unit body must be mounted horizontally.**
- **Fasten at the holes marked with ▲ as shown by the arrows.**
  - ① Fasten a thread to the hole.
  - ② The level can be easily obtained by hanging a weight from the string and aligning the string with the mark.

3.3. When embedding pipes into the wall (Fig. 3-5)

- The pipes are on the bottom left.
- When the cooling pipe, drain pipes internal/external connection lines etc are to be embedded into the wall in advance, the extruding pipes etc, may have to be bent and have their length modified to suit the unit.
- Use marking on the mount board as a reference when adjusting the length of the embedded cooling pipe.
- During construction, give the length of the extruding pipes etc some leeway.
  - Ⓐ Mount board
  - Ⓑ Reference marking for flare connection
  - Ⓒ Through hole
  - Ⓓ On-site piping

3.4. Preparing the indoor unit

Rear, right and lower piping (Fig. 3-6)

1. Bind the cooling pipe and drain pipe together.
- Bind the pipes together with vinyl tape at three or more points. This will facilitate passing the pipes through the wall.
2. Remove the corner box and knock out the knockout holes as necessary.
- Remove the corner box by pushing in a downward direction ⓑ, while at the same time, pressing in the upper side part of the corner box ⓐ.
  - Ⓐ Corner box
  - Ⓑ Under cover

Left and left rear piping (Fig. 3-7)

1. Remove the under cover.
- Remove the under cover by sliding it towards the rear of the unit ⓑ, while at the same time, pressing the two points marked by arrow heads ⓐ.
2. Remove the corner box and knock out the knockout holes as necessary.

3.5. Mounting the indoor unit

1. Affix the mounting plate to the wall.
2. Hang the indoor unit on the two hooks positioned on the upper part of the mounting plate.

Rear, right and lower piping (Fig. 3-8)

3. Affix the indoor unit.
4. After connecting the pipes, put the corner box back to where it was (follow the removal steps backwards).
   - Ⓐ Square hole
   - Ⓑ Hooks

Left and left rear piping (Fig. 3-9)

3. Cut out a mounting piece from the packaging material.
4. Pull the indoor unit up towards yourself as shown in the figure below and slide the mounting piece in to the mounting plate using the mounting piece setting marks as reference.
5. After connecting the pipes and wiring, put the under cover back to where it was, and remove the mounting piece and affix the indoor unit as shown in the left figure.
6. Put the corner box back to where it was.
   - Ⓐ Mounting piece
   - Ⓑ Ceiling
   - Ⓒ Rib

4. Installing the refrigerant piping

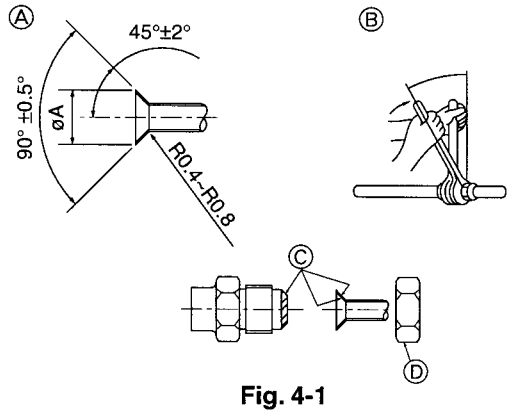

Fig. 4-1

Ⓐ Flare cutting dimensions

Copper pipe O.D. (mm)	Flare dimensions øA dimensions (mm)
ø6.35	8.7 - 9.1
ø9.52	12.8 - 13.2
ø12.7	16.2 - 16.6
ø15.88	19.3 - 19.7
ø19.05	23.6 - 24.0

4.1. Connecting pipes (Fig. 4-1)

- When commercially available copper pipes are used, wrap liquid and gas pipes with commercially available insulation materials (heat-resistant to 100 °C or more, thickness of 12 mm or more).
- The indoor parts of the drain pipe should be wrapped with polyethylene foam insulation materials (specific gravity of 0.03, thickness of 9 mm or more).
- Apply thin layer of refrigerant oil to pipe and joint seating surface before tightening flare nut.
- Use two wrenches to tighten piping connections.
- Use refrigerant piping insulation provided to insulate indoor unit connections. Insulate carefully.

Ⓑ Flare nut tightening torque

Copper pipe O.D. (mm)	Flare nut O.D. (mm)	Tightening torque (N·m)
ø6.35	17	14 - 18
ø6.35	22	34 - 42
ø9.52	22	34 - 42
ø12.7	26	49 - 61
ø12.7	29	68 - 82
ø15.88	29	68 - 82
ø15.88	36	100 - 120
ø19.05	36	100 - 120

Ⓒ Apply refrigerating machine oil over the entire flare seat surface.

Ⓓ Use the flare nuts as follows.

Indoor unit		RP1.6, 2	RP2.5, 3	RP4-6
Refrigerant		R407C		
Joint outdoor unit		PU(H)-P1.6/2	PU(H)-P2.5/3	PU(H)-P4/5/6
Gas side	Pipe size (mm)	ø15.88	ø15.88	ø19.05
	Indoor nut	*1	*1	*1
	Outdoor nut	*1	*1	*1
Liquid side	Pipe size (mm)	ø9.52	ø9.52	ø9.52
	Indoor nut	*1	*1	*1
	Outdoor nut	*1	*1	*1

Indoor unit		RP1.6, 2	RP2.5, 3	RP4-6
Refrigerant		R410A		
Joint outdoor unit		PUHZ-RP1.6/2	PUHZ-RP2.5/3	PUHZ-RP4/5/6
Gas side	Pipe size (mm)	ø12.7	ø15.88	ø15.88
	Indoor nut	*2	*1	*2
	Outdoor nut	*1	*1	*1
Liquid side	Pipe size (mm)	ø6.35	ø9.52	ø9.52
	Indoor nut	*2	*1	*1
	Outdoor nut	*1	*1	*1

*1: The flare nut is attached to its pipe.
*2: The flare nut is in the outdoor unit accessory.
Do not use the flare nut attached. If it is used, a gas leakage or even a pipe extraction may occur.

Refer to the outdoor unit installation manual for the specification of connecting pipes.

①

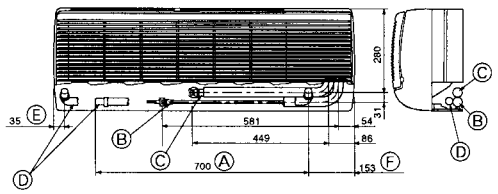

Fig. 4-2

4.2. Positioning refrigerant and drain piping

① Position of refrigerant and drain piping (Fig. 4-2)

- The drain pipe can be cut midway to meet the on-site conditions.

Ⓐ (Total length of flexible hose) Ⓓ Drain hose
Ⓑ Liquid pipe Ⓔ Left-side piping
Ⓒ Gas pipe Ⓕ Right-side piping

② Determine the position of the knockout holes on the unit body. (Fig. 4-3)

▶ **Cut the knockout holes using a saw blade or an adequate knife.**
Take care not to damage other parts of the unit.

②

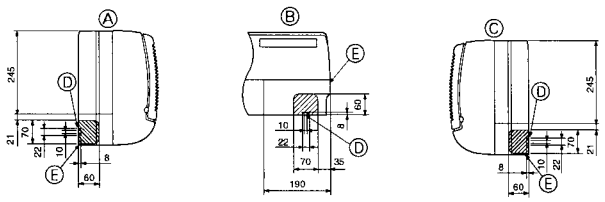

Fig. 4-3

- Remove the corner box and drill a knockout hole. If a hole is made without removing the box, the drain hose could be damaged.

Ⓐ Left-side piping Ⓓ Remote controller cable through hole
Ⓑ Lower piping Ⓔ Corner box
Ⓒ Right-side piping

4.3. Refrigerant piping (Fig. 4-4)

Indoor unit

1. Remove the flare nut and cap of the indoor unit.
2. Make a flare for the liquid pipe and gas pipe and apply refrigerating machine oil (available from your local supplier) to the flare sheet surface.
3. Quickly connect the on site cooling pipes to the unit.
4. Wrap the pipe cover ③ that is attached to the gas pipe and make sure that the connection join is not visible.
5. Wrap the pipe cover of the unit's liquid pipe and make sure that it covers the insulation material of the on site liquid pipe.
6. Use the bands that are provided ④ to tighten both ends (15–20mm) of each pipe cover ③.

Ⓐ Cooling pipe and insulation (available from local supplier)
Ⓑ Unit's gas pipe Ⓔ Bands ④
Ⓒ Unit's liquid pipe Ⓕ On site gas pipe
Ⓓ Pipe cover ③ Ⓖ On site liquid pipe

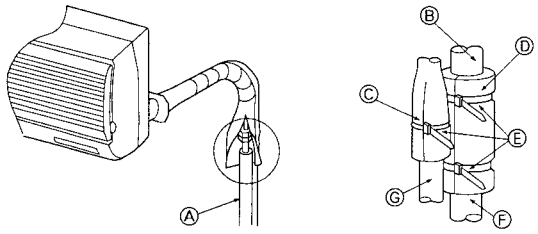

Fig. 4-4

5. Drainage piping work

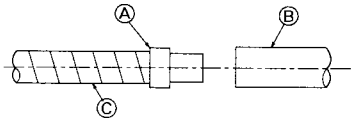

Fig. 5-1

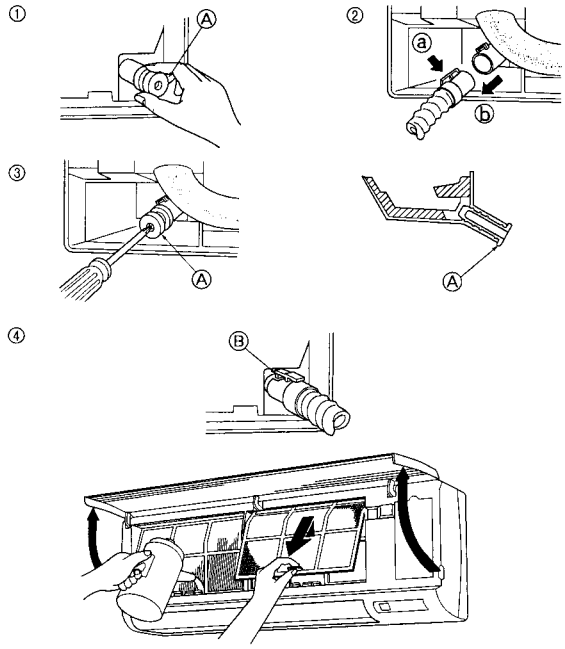

Fig. 5-2

5.1. Drainage piping work (Fig. 5-1)

- Drain pipes should have an inclination of 1/100 or more.
- For extension of the drain pipe, use a soft hose (inner dia. 15 mm) available on the market or hard vinyl chloride pipe (VP-20). Make sure that there is no water leakage from the connections.
- If the drain pipe passes indoors it must be covered with insulating material (foamed polyethylene: specific gravity: 0.03, thickness: 9 mm or more) available on the market.
- Do not put the drain piping directly in a drainage ditch where sulphuric gas may be generated.
- When piping has been completed, check that water flows from the end of the drain pipe.

  Ⓐ Drain connection socket Ⓒ Indoor unit's drain hose
  Ⓑ On site drain pipe (VP-20)

⚠ **Caution:**
The drain pipe should be installed according to this Installation Manual to ensure correct drainage. Thermal insulation of the drain pipes is necessary to prevent condensation. If the drain pipes are not properly installed and insulated, condensation may drip on the ceiling, floor or other possessions.

Preparing left and left rear piping (Fig. 5-2)

① Remove the drain cap.
- Remove the drain cap by holding the bit that sticks out at the end of the pipe and pulling.

  Ⓐ Drain cap

② Remove the drain hose.
- Remove the drain hose by holding on to the base of the hose ⓐ (shown by arrow) and pulling towards yourself ⓑ.

③ Insert the drain cap.
- Insert a screwdriver etc into the hole at the end of the pipe and be sure to push to the base of the drain cap.

④ Insert the drain hose.
- Push the drain hose until it is at the base of the drain box connection outlet.
- Please make sure the drain hose hook is fastened properly over the extruding drain box connection outlet.

  Ⓑ Hooks

Remove the side panel of the indoor unit on the drain side. Pour water in the drain pan and check that it comes out the drain pipe end. After confirmation, reinstall the side panel.

6. Electrical work

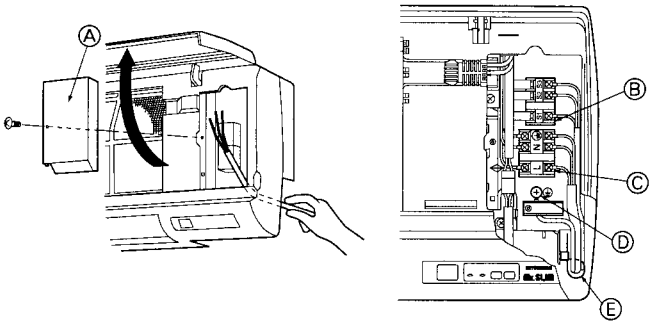

Fig. 6-1

6.1. Indoor unit (Fig. 6-1)

1. Remove the corner box.
2. Install each wire into the unit.
3. Open the front grill, remove 1 tapping screw and remove the terminal block cover.

   Ⓐ Terminal block cover

4. Connect each wire properly to the terminal block.
- In consideration of future servicing, please leave some leeway for the wiring length.

5. Put all the parts back the way they were.
6. Use a clamp from the bottom of the electric parts box to fasten each wire.

   Ⓑ Terminal block for Indoor/outdoor connecting
   Ⓒ Terminal block for heater (PKH models)
   Ⓓ Earth point
   Ⓔ Clamp

Indoor unit model			PKA	PKH
Indoor unit power supply (Heater)			–	~/N (single), 50Hz, 220-230-240V
Indoor unit input capacity (Heater) Main switch (Breaker)		*1	–	16A
Wiring Wire No. × size (mm²)	Indoor unit power supply (Heater)		–	2 × Min. 1.5
	Indoor unit power supply (Heater) earth		–	1 × Min. 1.5
	Indoor unit-Outdoor unit		3 × 2.5 (Polar)	3 × 2.5 (Polar)
	Indoor unit-Outdoor unit earth		1 × Min. 2.5	1 × Min. 2.5
	Remote controller-Indoor unit	*2	–	–
Circuit rating	Indoor unit (Heater) L-N	*3	–	AC 220-230-240V
	Indoor unit-Outdoor unit S1-S2	*3	AC 220-230-240V	AC 220-230-240V
	Indoor unit-Outdoor unit S2-S3	*3	DC24V	DC24V
	Remote controller-Indoor unit	*3	–	–

*1. A breaker with at least 3 mm contact separation in each pole shall be provided. Use non-fuse breaker (NF) or earth leakage breaker (NV).
*2. A 10 m wire is attached in the remote controller accessory.
*3. The figures are NOT always against the ground.
S3 terminal has DC 24 V against S2 terminal. However between S3 and S1, these terminals are not electrically insulataed by the transformer or other device.

Notes: 1. Wiring size must comply with the applicable local and national code.
2. Power supply cords and Indoor unit/Outdoor unit connecting cords shall not be lighter than polychloroprene sheathed flexible cord. (Design 245 IEC 57)
3. Install an earth longer and thicker than other cables.

6. Electrical work

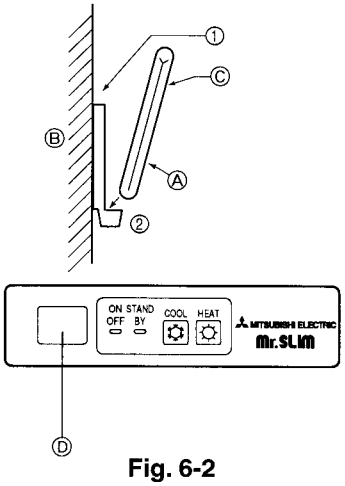

Fig. 6-2

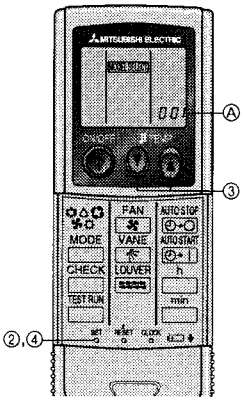

Fig. 6-3

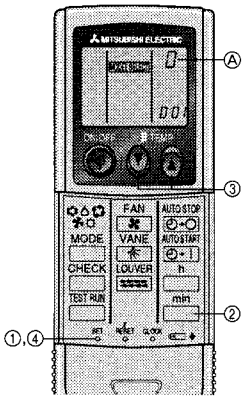

Fig. 6-4

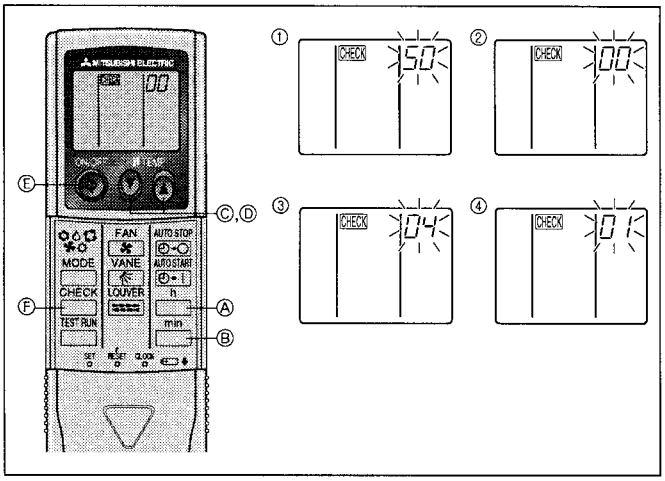

Fig. 6-5

6.2. Installing the wireless remote controller

6.2.1. Installation area

- Area in which the remote controller is not exposed to direct sunshine.
- Area in which there is no nearby heating source.
- Area in which the remote controller is not exposed to cold (or hot) winds.
- Area in which the remote controller can be operated easily.
- Area in which the remote controller is beyond the reach of children.

6.2.2. Installation method (Fig. 6-2)

① Attach the remote controller holder to the desired location using two tapping screws.
② Place the lower end of the controller into the holder.
Ⓐ Remote controller
Ⓑ Wall
Ⓒ Display panel
Ⓓ Receiver

- The signal can travel up to approximately 7 meters (in a straight line) within 45 degrees to both right and left of the center line of the receiver.

6.2.3. Setting (Fig. 6-3)

① Insert batteries.
② Press the SET button with something sharp at the end.
MODEL SELECT blinks and Model No. is lighted.
③ Press the temp ▼ ▲ button to set the Model No.
④ Press the SET button with something sharp at the end.
MODEL SELECT and Model No. are lighted for three seconds, then turned off.

Indoor	Outdoor	Ⓐ Model No.
PLH, PCH, PKH (1.6, 2)	PUH	001
PLA, PCA, PKA (1.6, 2)	PUH, PUHZ	001
	PU	033
PKH (2.5, 3, 4)	PUH	003
PKA (2.5, 3, 4)	PUH, PUHZ	003
	PU	035

6.2.4. Assigning a remote controller to each unit (Fig. 6-4)

Each unit can be operated only by the assigned remote controller.
Make sure each pair of an indoor unit PC board and a remote controller is assigned to the same pair No.

6.2.5. Wireless remote controller pair number setting operation

① Press the SET button with something sharp at the end.
Start this operation from the status of remote controller display turned off.
MODEL SELECT blinks and Model No. is lighted.
② Press the min button twice continuously.
Pair No. "0" blinks.
③ Press the temp ▼ ▲ button to set the pair number you want to set.
④ Press the SET button with something sharp at the end.
Set pair number is lighted for three seconds then turned off.

Ⓐ Pair No. of wireless remote controller	Indoor PC board
0	Factory setting
1	Cut J41
2	Cut J42
3–9	Cut J41, J42

6.3. Function Settings (Fig. 6-5)

Changing the power voltage setting

Be sure to change the power voltage setting depending on the voltage used.
① Go to the function select mode
Press the CHECK button Ⓕ twice continuously.
(Start this operation from the status of remote controller display turned off.)
CHECK is lighted and "00" blinks.
Press the temp ▼ button Ⓒ once to set "50". Direct the wireless remote controller toward the receiver of the indoor unit and press the h button Ⓐ.
② Setting the unit number
Press the temp ▼ ▲ button Ⓒ and Ⓓ to set the unit number "00". Direct the wireless remote controller toward the receiver of the indoor unit and press the min button Ⓑ.
③ Selecting a mode
Enter 04 to change the power voltage setting using the ▼ Ⓒ and ▲ Ⓓ buttons. Direct the wireless remote controller toward the receiver of the indoor unit and press the h button Ⓐ.

Current setting number: 1 = 1 beep (one second)
2 = 2 beeps (one second each)
3 = 3 beeps (one second each)

④ Selecting the setting number
Use the ▼ Ⓒ and ▲ Ⓓ buttons to change the power voltage setting to 01 (240 V). Direct the wireless remote controller toward the sensor of the indoor unit and press the h button Ⓐ.
⑤ To select multiple functions continuously
Repeat steps ③ and ④ to change multiple function settings continuously.
⑥ Complete function selection
Direct the wireless remote controller toward the sensor of the indoor unit and press the button Ⓔ.

Note:
Whenever changes are made to the function settings after installation or maintenance, be sure to record the changes with a mark in the "Setting" column of the Function table.

6. Electrical work

Function table

Select unit number 00

Mode	Settings	Mode no.	Setting no.	Initial setting	Setting
Power failure automatic recovery	Not available	01	1	○	
	Available		2		
Indoor temperature detecting	Indoor unit operating average	02	1	○	
	Set by indoor unit's remote controller		2		
	Remote controller's internal sensor		3	–	
LOSSNAY connectivity	Not Supported	03	1	○	
	Supported (indoor unit is not equipped with outdoor-air intake)		2		
	Supported (indoor unit is equipped with outdoor-air intake)		3	–	
Power voltage	240 V	04	1		
	220 V, 230 V		2	○	
Auto mode (only for PUHZ)	Energy saving cycle automatically enabled	05	1	○	
	Energy saving cycle automatically disabled		2		

Select unit numbers 01 to 03 or all units (AL [wired remote controller]/07 [wireless remote controller])

Mode	Settings	Mode no.	Setting no.	Initial setting	Setting
Filter sign	100 Hr	07	1	○	
	2500 Hr		2		
	No filter sign indicator		3		
Fan speed	Standard (PLH/PLA)/Silent (PCH/PCA)	08	1	–	
	High ceiling ① (PLH/PLA)/Standard (PCH/PCA)		2		
	High ceiling ② (PLH/PLA)/High ceiling PCH/PCA)		3		
No. of air outlets	4 directions	09	1	–	
	3 directions		2		
	2 directions		3		
Installed options (high-performance filter)	Not supported	10	1	–	
	Supported		2		
Up/down vane setting	No vanes	11	1	–	
	Equipped with vanes (vanes angle setup ①)		2		
	Equipped with vanes (vanes angle setup ②)		3		
Energy saving air flow (Heating mode)	Disabled	12	1	–	
	Enabled		2		

7. Test run

7.1. Before test run

- ▶ **After completing installation and the wiring and piping of the indoor and outdoor units, check for refrigerant leakage, looseness in the power supply or control wiring, wrong polarity, and no disconnection of one phase in the supply.**
- ▶ **Use a 500-volt megohmmeter to check that the resistance between the power supply terminals and ground is at least 1.0 MΩ.**
- ▶ **Do not carry out this test on the control wiring (low voltage circuit) terminals.**

⚠ **Warning:**

- **Do not use the air conditioner if the insulation resistance is less than 1.0 MΩ. Insulation resistance**
- **Turn on the power at least 12 hours before starting operation.**
- Starting operation immediately after turning on the main power switch can result in severe damage to internal parts. Keep the power switch turned on during the operational season.

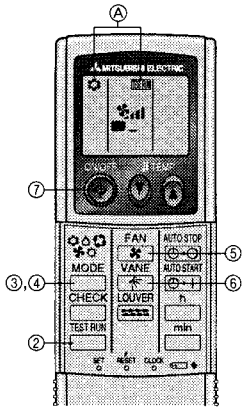

Fig. 7-1

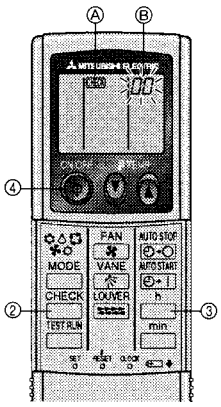

Fig. 7-2

7.2. Test run

7.2.1. Using wireless remote controller (Fig. 7-1)

① Turn on the power to the unit at least 12 hours before the test run.

② Press the TEST RUN button twice continuously.
(Start this operation from the status of remote controller display turned off.)
Ⓐ TEST RUN and current operation mode are displayed.

③ Press the MODE (❄ 💧 ✤ ☼ ⟳) button to activate COOL❄ mode, then check whether cool air is blown out from the unit.

④ Press the MODE (❄ 💧 ✤ ☼ ⟳) button to activate HEAT☼ mode, then check whether warm air is blown out from the unit.

⑤ Press the FAN button and check whether fan speed changes.

⑥ Press the VANE button and check whether the auto vane operates properly.

⑦ Press the ON/OFF button to stop the test run.

Note:

- **Point the remote controller towards the indoor unit receiver while following steps ② to ⑦.**
- **It is not possible to run the in FAN, DRY or AUTO mode.**

7.2.2. Using SW4 in outdoor unit

Refer to the outdoor unit installation manual.

7.3. Self-check (Fig. 7-2)

① Turn on the power.

② Press the CHECK button twice.
(Start this operation from the status of remote controller display turned off.)
Ⓐ CHECK begins to light.
Ⓑ «00» begins to blink.

③ While pointing the remote controller toward the unit's receiver, press the h button. The check code will be indicated by the number of times that the buzzer sounds from the receiver section and the number of blinks of the operation lamp.

④ Press the ON/OFF button to stop the self-check.

7. Test run

• For description of each check code, refer to the following table.

① Check code	Symptom	② Buzzer sound	③ OPE LED
P1	Intake sensor error	Single beep × 1	Lit for 1 sec. × 1
P2	Pipe sensor error	Single beep × 2	Lit for 1 sec. × 2
P4	Drain sensor error	Single beep × 4	Lit for 1 sec. × 4
P5	Drain pump error	Single beep × 5	Lit for 1 sec. × 5
P6	Freezing/Overheating safeguard operation	Single beep × 6	Lit for 1 sec. × 6
P8	Pipe temperature error	Single beep × 8	Lit for 1 sec. × 8
P9	TH5 sensor error	Single beep × 2	Lit for 1 sec. × 2
U0–UP	Outdoor unit error	Double beep × 1	Lit for 0.4 sec. + 0.4 sec. × 1
F1–FA	Outdoor unit error	Double beep × 1	Lit for 0.4 sec. + 0.4 sec. × 1
E0–E5	Signal error between remote controller and indoor units	Sounds other than above	Lights other than above
E6–EF	Communication error between indoor and outdoor units	Sounds other than above	Lights other than above
– –	No alarm history	No sound	Not lit
F F F F	No unit	Triple beep	Not lit

• On wireless remote controller
② The continuous buzzer sounds from receiving section of indoor unit.
③ Blink of operation lamp
• On wired remote controller
① Check code displayed in the LCD.

• If the unit cannot be operated properly after the above test run has been performed, refer to the following table to remove the cause.

Symptom			Cause
Wired remote controller		LED 1, 2 (PCB in outdoor unit)	
H0	For about 2 minutes following power-on	After LED 1, 2 are lighted, LED 2 is turned off, then only LED 1 is lighted. (Correct operation)	• For about 2 minutes following power-on, operation of the remote controller is not possible due to system start-up. (Correct operation)
H0 → Error code	After about 2 minutes has expired following power-on	Only LED 1 is lighted. → LED 1, 2 blink.	• Connector for the outdoor unit's protection device is not connected. • Reverse or open phase wiring for the outdoor unit's power terminal block (L1, L2, L3)
Display messages do not apper even when operation switch is turned ON (operation lamp does not light up).		Only LED 1 is lighted. → LED 1 blinks twice, LED 2 blinks once.	• Incorrect wiring between indoor and outdoor units (incorrect polarity of S1, S2, S3) • Remote controller wire short

On the wireless remote controller with condition above, following phenomena takes place.
• No signals from the remote controller are accepted.
• OPE lamp is blinking.
• The buzzer makes a short pipng sound.

Note:
Operation is not possible for about 30 seconds after cancellation of function selection. (Correct operation)

For description of each LED (LED 1, 2, 3) provided on the indoor controller, refer to the following table.

LED 1 (power for microcomputer)	Indicates whether control power is supplied. Make sure that this LED is always lit.
LED 2 (power for remote controller)	Indicates whether power is supplied to the remote controller. This LED lights only in the case of the indoor unit which is connected to the outdoor unit refrigerant address "0".
LED 3 (communication between indoor and outdoor units)	Indicates state of communication between the indoor and outdoor units. Make sure that this LED is always blinking.

2. Installation location

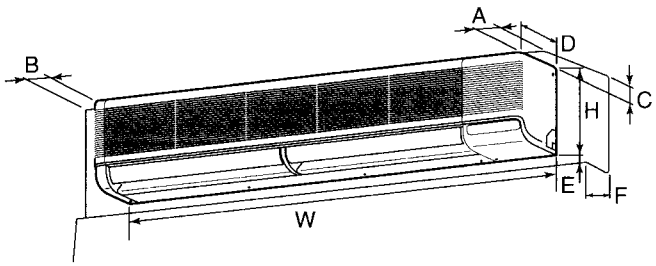

Fig. 2-1

2.1. Outline dimensions (Indoor unit) (Fig. 2-1)

Select a proper position allowing the following clearances for installation and maintenance.

(mm)

Models	W	D	H	A	B	C	E	F
RP2.5, 3	1400	235	340	Min. 150	Min. 50	Min. 30	Min. 250	Min. 150
RP4	1680	235	340	Min. 150	Min. 50	Min. 30	Min. 250	Min. 150

⚠ Warning:
Mount the indoor unit on a ceiling strong enough to withstand the weight of the unit.

2.2. Outline dimensions (Outdoor unit)

Refer to the outdoor unit installation manual.

3. Installing the indoor unit

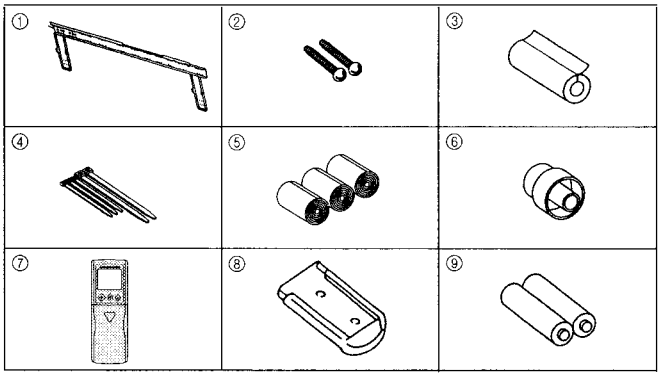

Fig. 3-1

3.1. Check the indoor unit accessories (Fig. 3-1)

The indoor unit should be supplied with the following accessories.

PARTNUMBER	ACCESSORY	QUANTITY	LOCATION OF SETTING
①	Wall-fixing bracket	1	Fix at the back of the unit
②	Tapping screw 4 × 35	12	Set inside the unit
③	Insulation material	2	
④	Band	4 (large) + 3 (small)	
⑤	Felt tape	3	
⑥	Drain socket	1	
⑦	Wireless remote controller	1	
⑧	Remote controller holder	1	
⑨	Alkali batteries	2	

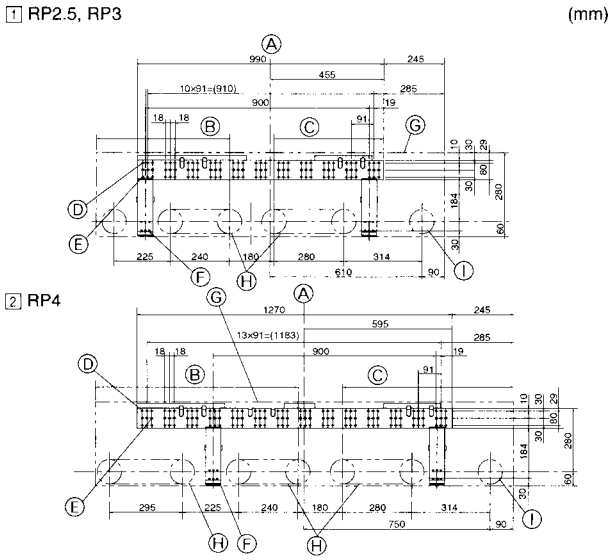

Fig. 3-2

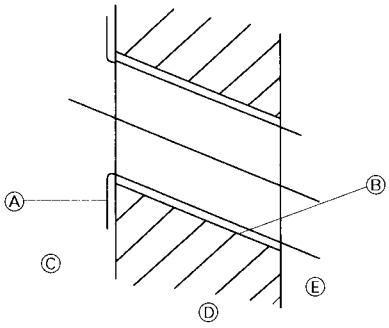

Fig. 3-3

3.2. Installing the wall mounting fixture (Fig. 3-2)

1) Setting the wall mounting fixture and piping positions

- **Using the wall mounting fixture, determine the unit's installation position and the locations of the piping holes to be drilled.**

⚠ Warning:
Before drilling a hole in the wall, you must consult the building contractor.

Ⓐ Indoor unit center line
Ⓑ Left drain range
Ⓒ Right drain range
Ⓓ Hole for tapping screw
Ⓔ Bolt hole
Ⓕ Hole for tapping screw
Ⓖ Contour of the unit
Ⓗ Knockout hole for left rear piping
Ⓘ Rear piping access hole (90-100 mm dia.)

2) Drilling the piping hole (Fig. 3-3)

- **Use a core drill to make a hole of 90-100 mm diameter in the wall in the piping direction, at the position shown in the diagram to the left.**
- **The hole should incline so that the outside opening is lower than the inside opening.**
- **Insert a sleeve (with a 90 mm diameter and purchased locally) through the hole.**

Note:
The purpose of the hole's inclination is to promote drain flow.

Ⓐ Sleeve
Ⓑ Hole
Ⓒ (Indoors)
Ⓓ Wall
Ⓔ (Outdoors)

3. Installing the indoor unit

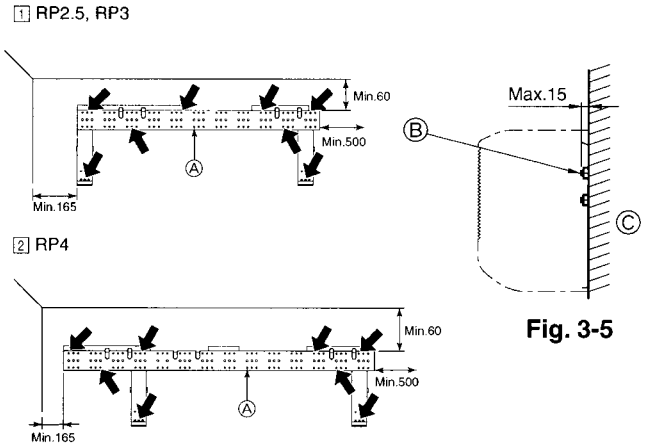

Fig. 3-5

Fig. 3-4

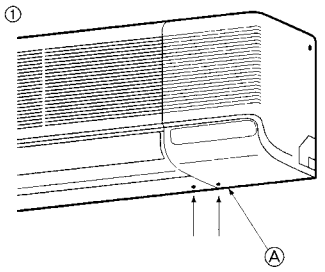

Fig. 3-6

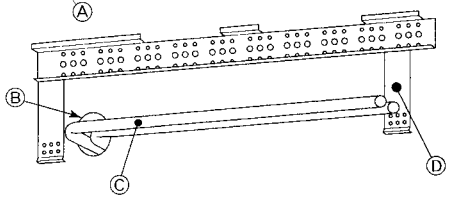

Fig. 3-7

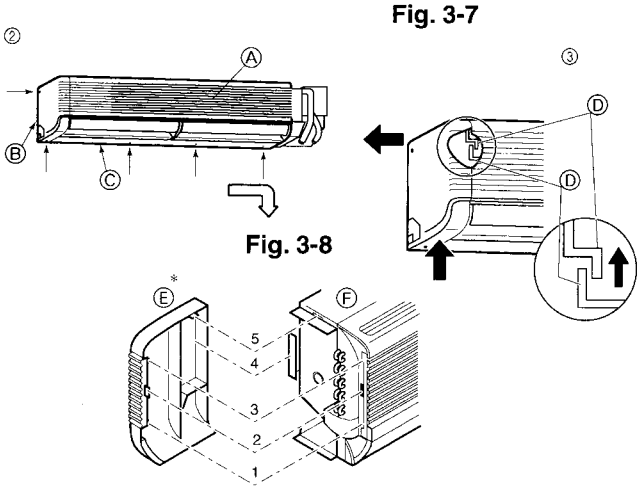

Fig. 3-8

Fig. 3-9

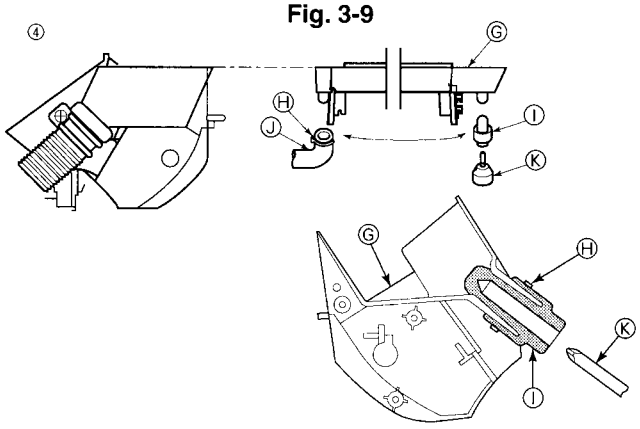

Fig. 3-10

3) Installing the wall mounting fixture

- **Since the indoor unit weighs near 30 kg, selection of the mounting location requires thorough consideration. If the wall does not seem to be strong enough, reinforce it with boards or beams before installation.**
- **The mounting fixture must be secured at both ends and at the centre, if possible. Never fix it at a single spot or in any nonsymetrical way. (If possible, secure the fixture at all the positions marked with a bold arrow.) (Fig. 3-4)**
- **Secure the wall mounting fixture through its middle row of 12-mm-dia. holes using locally purchased bolts (through bolts, bolt anchor and nut anchor) of M10 or W3/8 threading. The bolt tip must not protrude by more than 15 mm from the wall surface. (Fig. 3-5)**
  Use at least two bolts for a concrete wall, and at least four bolts for a foamed concrete wall.

Ⓐ Wall-fixing bracket Ⓑ Mounting bolt Ⓒ Wall

⚠ Warning:
If possible, secure the fixture at all the positions marked with a bold arrow.

⚠ Caution:
The unit body must be mounted horizontally.

3.3. Preparation for piping connection

Remove the vinyl band that holds the drain piping.

- This vinyl band can be used to temporarily attach the pipes to the wall mounting fixture while connecting the left pipe.

1) Rear, right and lower piping (Fig. 3-6)

① Remove the right side panel.

2) Left and left rear piping

① Remove the side panel.

When embedding pipes into the wall (Fig. 3-7)

When the refrigerant pipe, drain pipes, internal/external connection lines, etc., are to be embedded into the wall in advance, the extruding pipes, etc., may have to be bent and have their length modified to the unit.

- Make the pipes to be embedded slightly longer than necessary, and install.

Ⓐ Right side panel Ⓒ On-site piping
Ⓑ Through hole Ⓓ Wall-fixing bracket ①

② Remove the five screws indicated by the arrows in the diagram. (Fig. 3-8)
③ Remove the left side panel, then the lower panel.

1. While pushing up the front lower portion of the side panel (to disengage the side panel catch from the unit catch), slide the upper portion of the side panel to the left.

- When the indoor unit is already mounted, be sure the unit does not fall from the wall mounting fixture.
- For reassembly, put the catch at the front lower portion of the side panel over the unit body and push it to the right.

Ⓐ Grille Ⓓ Catch
Ⓑ Left side panel Ⓔ Side panel
Ⓒ Lower panel Ⓕ Unit body

* Structure of the side panel and the unit body (Fig. 3-9)

1. Panel catch engages the unit body catch.
2. Panel catch is put in the unit body hole.
3. Panel catch engages the unit body catch.
4. Sheet metal of the unit body enters the panel.
5. Panel catch enters the unit body hole.

④ The drain hose can be connected at two different positions. Use the most convenient position and, if necessary, exchange the position of the drain pan, rubber plug and the drain hose. (Fig. 3-10)

Ⓖ Drain pan
Ⓗ Band
Ⓘ Plug
Ⓙ Drain hose
Ⓚ Screwdriver

3. Installing the indoor unit

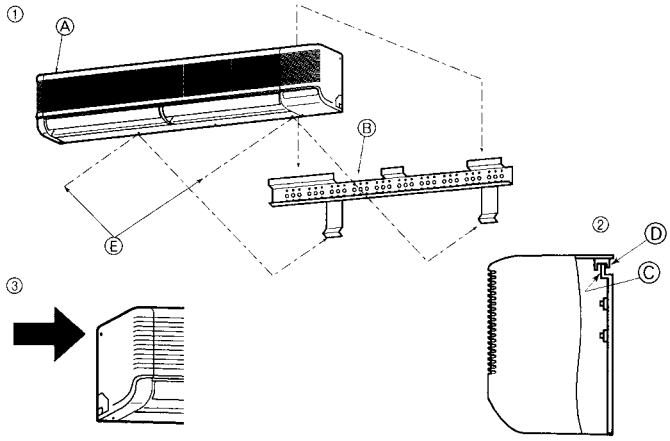

Fig. 3-11

3.4. Mounting the indoor unit (Fig. 3-11)

① Make sure to hang the metal catches of the indoor unit over the hooks of the wall mounting fixture.

② When the piping has been completed, use the securing screws to fix the indoor unit on the wall mounting fixture.

Note:
Check that the catches of the indoor unit securely fit over the hooks of the wall mounting fixture.

③ The screw indicated by the bold arrow is used only during transportation and should be removed. Remove the screw before installation if there is not enough space at the left side to remove it once the unit has been installed.

Ⓐ Indoor unit
Ⓑ Wall fixing bracket ①
Ⓒ Hook
Ⓓ Metal catch of the indoor unit
Ⓔ Securing screws

4. Installing the refrigerant piping

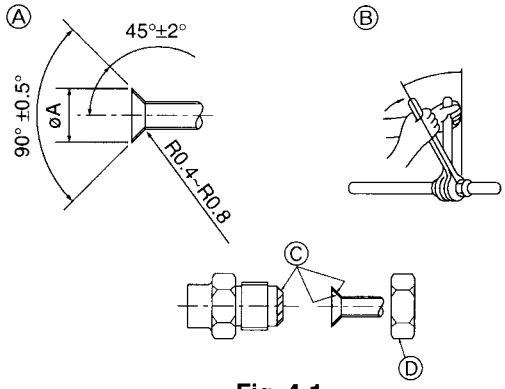

Fig. 4-1

Ⓐ Flare cutting dimensions

Copper pipe O.D. (mm)	Flare dimensions øA dimensions (mm)
ø6.35	8.7 - 9.1
ø9.52	12.8 - 13.2
ø12.7	16.2 - 16.6
ø15.88	19.3 - 19.7

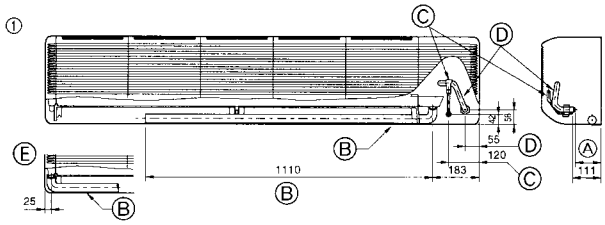

Fig. 4-2

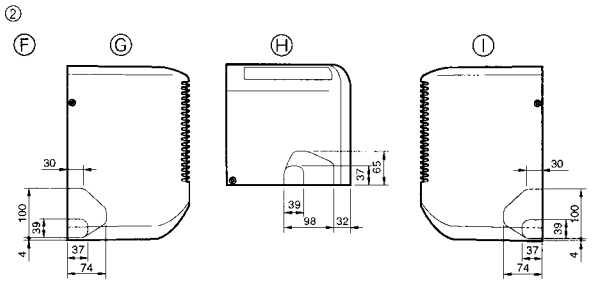

Fig. 4-3

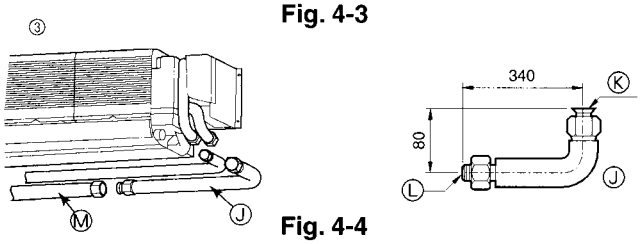

Fig. 4-4

4.1. Connecting pipes (Fig. 4-1)

- When commercially available copper pipes are used, wrap liquid and gas pipes with commercially available insulation materials (heat-resistant to 100 °C or more, thickness of 12 mm or more).
- The indoor parts of the drain pipe should be wrapped with polyethylene foam insulation materials (specific gravity of 0.03, thickness of 9 mm or more).
- Apply thin layer of refrigerant oil to pipe and joint seating surface before tightening flare nut.
- Use two wrenches to tighten piping connections.
- Use refrigerant piping insulation provided to insulate indoor unit connections. Insulate carefully.

Ⓑ Flare nut tightening torque

Copper pipe O.D. (mm)	Flare nut O.D. (mm)	Tightening torque (N·m)
ø6.35	17	14 - 18
ø9.52	22	34 - 42
ø12.7	26	49 - 61
ø15.88	29	68 - 82
ø15.88	36	100 - 120

Ⓒ Apply refrigerating machine oil over the entire flare seat surface.
Ⓓ Use the flare nuts as follows.

	RP2.5, 3	RP4
Indoor unit (Liquid)	Flare nut attached to indoor liquid valve	Flare nut attached to indoor liquid valve
Indoor unit (Gas)	Flare nut attached to indoor gas valve	* Flare nut in outdoor unit accessories
Outdoor unit (Liquid)	Flare nut attached to outdoor liquid valve	Flare nut attached to outdoor liquid valve
Outdoor unit (Gas)	Flare nut attached to outdoor gas valve	Flare nut attached to outdoor gas valve

* In case that the flare nut attached to indoor gas valve is used, gas leakage or even pipe extraction will occur.

4.2. Positioning refrigerant and drain piping

① Position of refrigerant and drain piping (Fig. 4-2)
② Determine the position of the knockout holes on the unit body (Fig. 4-3)
- Make the knockout holes using a saw blade or an adequate knife.

⚠ **Caution:**
The side panel must be removed before drilling a knockout hole in it.
If a hole is made with the side panel in place, the refrigerant pipe within the unit could be damaged.

③ L-shaped connection pipe (for gas piping) (Fig. 4-4)

Ⓐ 107 mm (RP2.5, 3), 102 mm (RP4)
Ⓑ Drain hose
Ⓒ Liquid pipe
Ⓓ Gas pipe
Ⓔ Drain hose in left-side piping
Ⓕ Knockout holes on the unit body
Ⓖ For left-side piping
Ⓗ For lower-side piping
Ⓘ For right-side piping
Ⓙ L-shaped connection pipe (option)
Ⓚ Unit side
Ⓛ On-site piping side
Ⓜ Piping

4. Installing the refrigerant piping

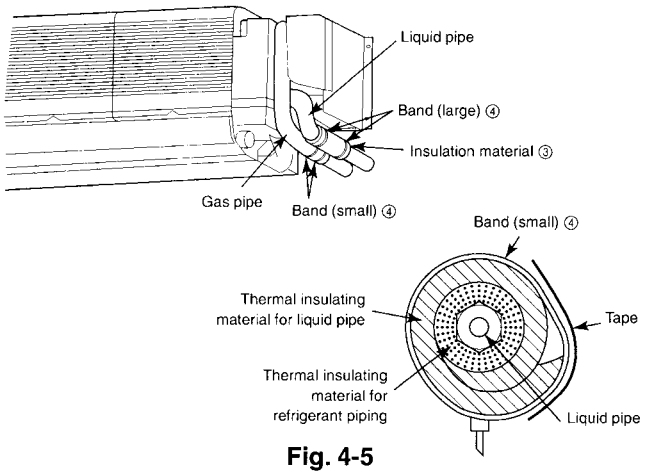

Fig. 4-5

4.3. Refrigerant piping (Fig. 4-5)

1) Indoor unit

⚠ Caution:

Before connecting right, lower, left or left rear piping, connect the supplied L-shaped connection pipe Ⓑ to the on-site piping.

When using commercially available copper pipes:

Refrigerant and Drainage Piping Sizes(R410A)		
Item \ Model		RP2.5, 3,4
Refrigerant piping	Liquid	ODø9.52 (3/8")
	Gas	ODø15.88 (5/8")
Unit drainage piping		PVC pipe IDø20 (13/16")

5. Drainage piping work (Fig. 5-1)

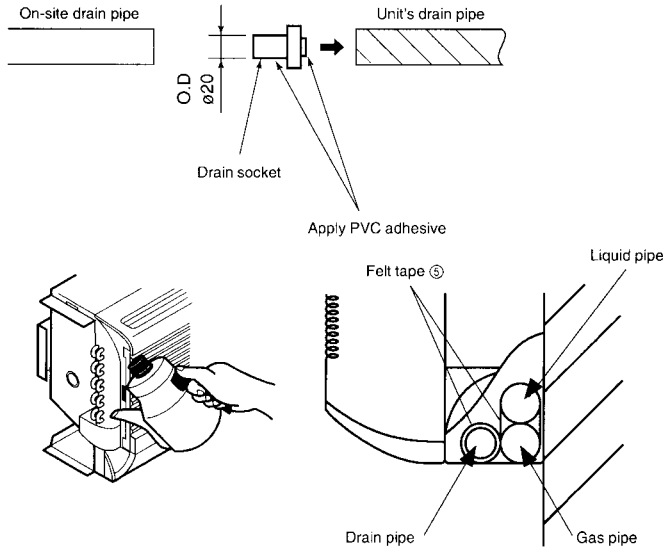

Fig. 5-1

- Drain pipes should have an inclination of 1/100 or more.
- Use PVC pipe VP-20 for drain piping.
- Drain pipes can be cut with a knife at the connection point according to the on-site conditions.
- When connecting the VP-20, use adhesive to attach the supplied drain socket.
- To prevent dripping condensation, put felt tape ⑤ over the insulation materials on the refrigerant and drain pipes within the unit as shown in the diagram.

⚠ Caution:

The drain pipe should be installed according to this Installation Manual to ensure correct drainage. Thermal insulation of the drain pipes is necessary to prevent condensation. If the drain pipes are not properly installed and insulated, condensation may drip on the ceiling, floor or other possessions.

6. Electrical work

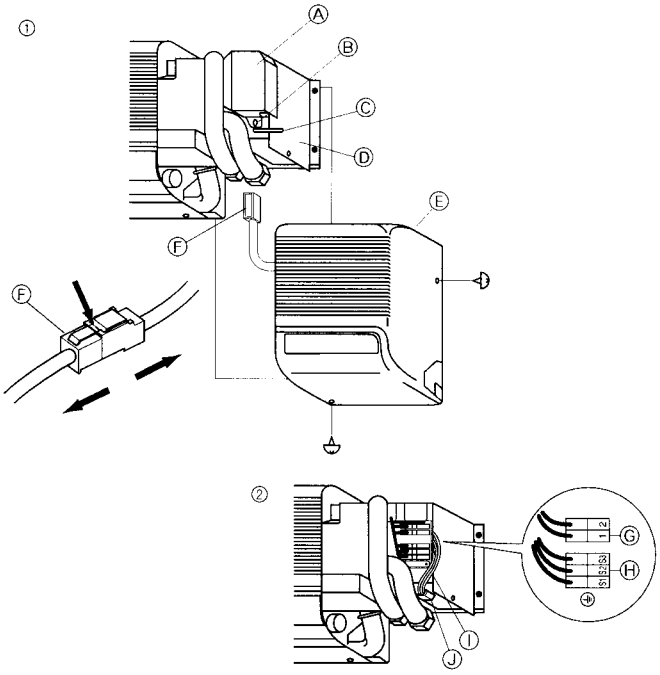

Fig. 6-1

6.1. Indoor unit (Fig. 6-1)

① Remove the right side panel.
To do this, remove the screws on the lower and right sides.
Remove the securing screw on the terminal board cover to take away the cover.
② Connect the power, control line. (3 × 2.5 mm² 2 poler).

▶ **This cables shall not lighter than polychloroprene sheathed flexible cord. (design 245 IEC 57)**

▶ **Fix power source wiring to control box using buffer bushing for tensile force. (PG connection or the like.)**

- Since the electric box may need to be pulled out for servicing or other occasions, wires must have enough slack.
- Class 3 grounding work must be conducted (grounding wire size: 2.5 mm² or more). After wiring is completed, reinstall the parts in the reverse order of removal.

⚠ Warning:

Wiring should be done so that the power lines are not subject to tension. Otherwise, heat may be generated or fire may occur.

Ⓐ Terminal board cover
Ⓑ Screw
Ⓒ Band
Ⓓ Printed circuit board cover
Ⓔ Right side panel
Ⓕ Coupler connector
Ⓖ Terminal board for remote controller (option)
Ⓗ Terminal board for control lines from the outdoor unit
Ⓘ Power supply wiring & connection wiring
Ⓙ Cord clamp

6. Electrical work

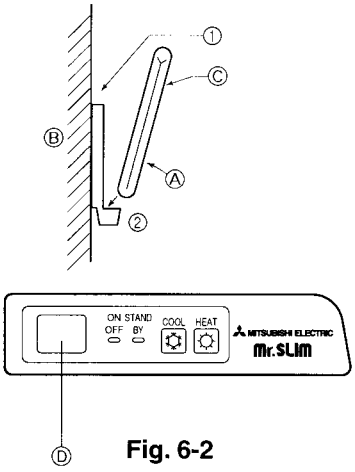

Fig. 6-2

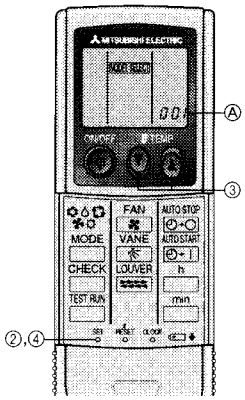

Fig. 6-3

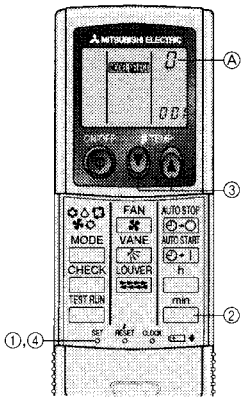

Fig. 6-4

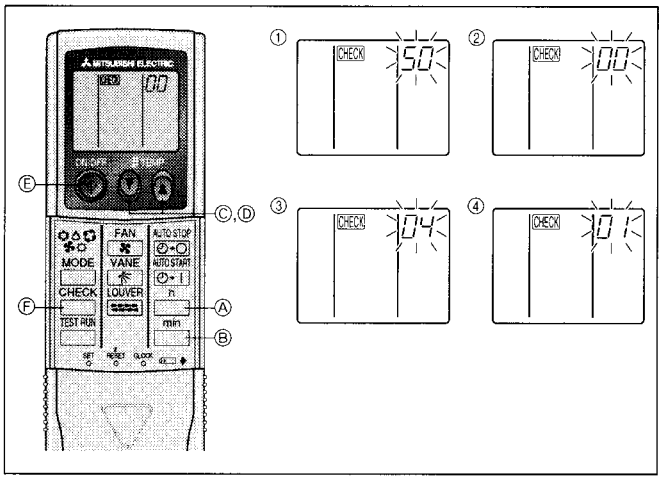

Fig. 6-5

6-2. Installing the wireless remote controller

1) Installation area

- Area in which the remote controller is not exposed to direct sunshine.
- Area in which there is no nearby heating source.
- Area in which the remote controller is not exposed to cold (or hot) winds.
- Area in which the remote controller can be operated easily.
- Area in which the remote controller is beyond the reach of children.

2) Installation method (Fig. 6-2)

① Attach the remote controller holder to the desired location using two tapping screws.
② Place the lower end of the controller into the holder.
Ⓐ Remote controller
Ⓑ Wall
Ⓒ Display panel
Ⓓ Receiver

- The signal can travel up to approximately 7 meters (in a straight line) within 45 degrees to both right and left of the center line of the receiver.

3) Setting (Fig. 6-3)

① Insert batteries.
② Press the SET button with something sharp at the end.
MODEL SELECT blinks and Model No. is lighted.
③ Press the temp ▼ ▲ button to set the Model No.
④ Press the SET button with something sharp at the end.
MODEL SELECT and Model No. are lighted for three seconds, then turned off.

Indoor	Outdoor	Ⓐ Model No.
PLH, PCH, PKH-P·GAH	PUH	001
PLA, PCA, PKA-P·GA	PUH, PUHZ	001
	PU	033
PKH-P·FAH	PUH	003
PKA-P·FA, PKA-RP·FA	PUH, PUHZ	003
	PU	035

4) Assigning a remote controller to each unit (Fig. 6-4)

Each unit can be operated only by the assigned remote controller.
Make sure each pair of an indoor unit PC board and a remote controller is assigned to the same pair No.

5) Wireless remote controller pair number setting operation

① Press the SET button with something sharp at the end.
Start this operation from the status of remote controller display turned off.
MODEL SELECT blinks and Model No. is lighted.
② Press the min button twice continuously.
Pair No. "0" blinks.
③ Press the temp ▼ ▲ button to set the pair number you want to set.
④ Press the SET button with something sharp at the end.
Set pair number is lighted for three seconds then turned off.

Ⓐ Pair No. of wireless remote controller	Indoor PC board
0	Factory setting
1	Cut J41
2	Cut J42
3~9	Cut J41, J42

6.3. Function Settings (Fig. 6-5)

Changing the power voltage setting

Be sure to change the power voltage setting depending on the voltage used.
① Go to the function select mode
Press the CHECK button Ⓔ twice continuously.
(Start this operation from the status of remote controller display turned off.)
CHECK is lighted and "00" blinks.
Press the temp ▼ button Ⓒ once to set "50". Direct the wireless remote controller toward the receiver of the indoor unit and press the h button Ⓐ.
② Setting the unit number
Press the temp ▼ ▲ button Ⓒ and Ⓓ to set the unit number "00". Direct the wireless remote controller toward the receiver of the indoor unit and press the min button Ⓑ.
③ Selecting a mode
Enter 04 to change the power voltage setting using the ▼ Ⓒ and ▲ Ⓓ buttons. Direct the wireless remote controller toward the receiver of the indoor unit and press the h button Ⓐ.

Current setting number: 1 = 1 beep (one second)
2 = 2 beeps (one second each)
3 = 3 beeps (one second each)

④ Selecting the setting number
Use the ▼ Ⓒ and ▲ Ⓓ buttons to change the power voltage setting to 01 (240 V). Direct the wireless remote controller toward the sensor of the indoor unit and press the h button Ⓐ.
⑤ To select multiple functions continuously
Repeat steps ③ and ④ to change multiple function settings continuously.
⑥ Complete function selection
Direct the wireless remote controller toward the sensor of the indoor unit and press the φ button Ⓔ.

Note:

Whenever changes are made to the function settings after construction or maintenance, be sure to record the added functions with an "○", in the "Check" column provided on the chart.

6. Electrical work

Function table

Select unit number 00

Mode	Settings	Mode no.	Setting no.	Initial setting	setting
Power failure automatic recovery	Not available	01	1	○	
	Available		2		
Indoor temperature detecting	Indoor unit operating average	02	1	○	
	Set by indoor unit's remote controller		2		
	Remote controller's internal sensor		3	–	
LOSSNAY connectivity	Not Supported	03	1	○	
	Supported (indoor unit is not equipped with outdoor-air intake)		2		
	Supported (indoor unit is equipped with outdoor-air intake)		3	–	
Power voltage	240 V	04	1		
	220 V, 230 V		2	○	
Auto mode (only for PUHZ)	Energy saving cycle automatically enabled	05	1	○	
	Energy saving cycle automatically disabled		2		

Select unit numbers 01 to 03 or all units (AL [wired remote controller]/07 [wireless remote controller])

Mode	Settings	Mode no.	Setting no.	Initial setting	setting
Filter sign	100Hr	07	1	○	
	2500Hr		2		
	No filter sign indicator		3		
Fan speed	Standard (PLH/PLA-P·AA(H)/PLA-RP·AA)/Silent (PLH/PLA-P·KA(H), PCH/PCA)	08	1	–	
	High ceiling ① (PLH/PLA-P·AA(H)/PLA-RP·AA)/Standard (PLH/PLA-P·KA(H), PCH/PCA)		2		
	High ceiling ② (PLH/PLA-P·AA(H)/PLA-RP·AA)/High ceiling (PLH/PLA-P·KA(H), PCH/PCA)		3		
No. of air outlets	4 directions	09	1	–	
	3 directions		2		
	2 directions		3		
Installed options (high-performance filter)	Not supported	10	1	–	
	Supported		2		
Up/down vane setting	No vanes	11	1	–	
	Equipped with vanes (vanes angle setup ①)		2		
	Equipped with vanes (vanes angle setup ②)		3		
Energy saving air flow (Heating mode)	Disabled	12	1	–	
	Enabled		2		

7. Test run

7.1. Before test run

- ▶ **After completing installation and the wiring and piping of the indoor and outdoor units, check for refrigerant leakage, looseness in the power supply or control wiring, wrong polarity, and no disconnection of one phase in the supply.**
- ▶ **Use a 500-volt megohmmeter to check that the resistance between the power supply terminals and ground is at least 1.0MΩ.**
- ▶ **Do not carry out this test on the control wiring (low voltage circuit) terminals.**

⚠ **Warning:**

- **Do not use the air conditioner if the insulation resistance is less than 1.0MΩ. Insulation resistance**
- **Turn on the power at least 12 hours before starting operation.**
- Starting operation immediately after turning on the main power switch can result in severe damage to internal parts. Keep the power switch turned on during the operational season.

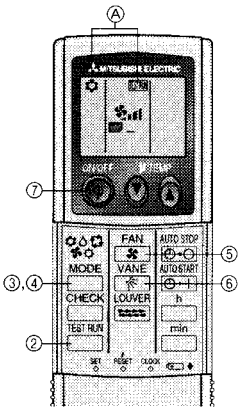

Fig. 7-1

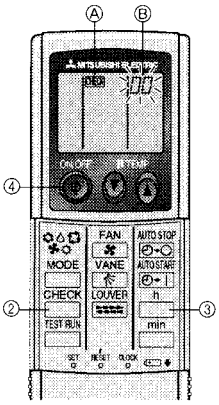

Fig. 7-2

7.2. Test run

7.2.1. Using wireless remote controller (Fig. 7-1)

① Turn on the power to the unit at least 12 hours before the test run.

② Press the TEST RUN button twice continuously.
(Start this operation from the status of remote controller display turned off.)
Ⓐ TEST RUN and current operation mode are displayed.

③ Press the MODE (❄ ♨ ✤ ☼ ⟳) button to activate COOL❄ mode, then check whether cool air is blown out from the unit.

④ Press the MODE (❄ ♨ ✤ ☼ ⟳) button to activate HEAT☼ mode, then check whether warm air is blown out from the unit.

⑤ Press the FAN button and check whether fan speed changes.

⑥ Press the VANE button and check whether the auto vane operates properly.

⑦ Press the ON/OFF button to stop the test run.

Note:

- **Point the remote controller towards the indoor unit receiver while following steps ② to ⑦.**
- **It is not possible to run the in FAN, DRY or AUTO mode.**

7.2.2. Using SW4 in outdoor unit

Refer to the outdoor unit installation manual.

7.3. Self-check (Fig. 7-2)

① Turn on the power.

② Press the CHECK button twice.
(Start this operation from the status of remote controller display turned off.)
Ⓐ CHECK begins to light.
Ⓑ «00» begins to blink.

③ While pointing the remote controller toward the unit's receiver, press the h button. The check code will be indicated by the number of times that the buzzer sounds from the receiver section and the number of blinks of the operation lamp.

④ Press the ON/OFF button to stop the self-check.

7. Test run

- For description of each check code, refer to the following table.

① Check code	Symptom	② Buzzer sound	③ OPE LED
P1	Intake sensor error	Single beep × 1	Lit for 1 sec. × 1
P2	Pipe sensor error	Single beep × 2	Lit for 1 sec. × 2
P4	Drain sensor error	Single beep × 4	Lit for 1 sec. × 4
P5	Drain pump error	Single beep × 5	Lit for 1 sec. × 5
P6	Freezing / Overheating safeguard operation	Single beep × 6	Lit for 1 sec. × 6
P8	Pipe temperature error	Single beep × 8	Lit for 1 sec. × 8
P9	TH5 sensor error	Single beep × 2	Lit for 1 sec. × 2
U0–UP	Outdoor unit error	Double beep × 1	Lit for 0.4 sec. + 0.4 sec. × 1
F1–FA	Outdoor unit error	Double beep × 1	Lit for 0.4 sec. + 0.4 sec. × 1
E0–E5	Signal error between remote controller and indoor units	Sounds other than above	Lights other than above
E6–EF	Communication error between indoor and outdoor units	Sounds other than above	Lights other than above
– –	No alarm history	No sound	Not lit
F F F F	No unit	Triple beep	Not lit

- On wireless remote controller
② The continuous buzzer sounds from receiving section of indoor unit.
③ Blink of operation lamp
- On wired remote controller
① Check code displayed in the LCD.

- If the unit cannot be operated properly after the above test run has been performed, refer to the following table to remove the cause.

Symptom			Cause
Wired remote controller		LED 1, 2 (PCB in outdoor unit)	
H0	For about 2 minutes following power-on	After LED 1, 2 are lighted, LED 2 is turned off, then only LED 1 is lighted. (Correct operation)	• For about 2 minutes following power-on, operation of the remote controller is not possible due to system start-up. (Correct operation)
H0 → Error code	After about 2 minutes has expired following power-on	Only LED 1 is lighted. → LED 1, 2 blink.	• Connector for the outdoor unit's protection device is not connected. • Reverse or open phase wiring for the outdoor unit's power terminal block (L1, L2, L3)
Display messages do not apper even when operation switch is turned ON (operation lamp does not light up).		Only LED 1 is lighted. → LED 1 blinks twice, LED 2 blinks once.	• Incorrect wiring between indoor and outdoor units (incorrect polarity of S1, S2, S3) • Remote controller wire short

On the wireless remote controller with condition above, following phenomena takes place.
- No signals from the remote controller are accepted.
- OPE lamp is blinking.
- The buzzer makes a short pipng sound.

Note:
Operation is not possible for about 30 seconds after cancellation of function selection. (Correct operation)

For description of each LED (LED 1, 2, 3) provided on the indoor controller, refer to the following table.

LED 1 (power for microcomputer)	Indicates whether control power is supplied. Make sure that this LED is always lit.
LED 2 (power for remote controller)	Indicates whether power is supplied to the remote controller. This LED lights only in the case of the indoor unit which is connected to the outdoor unit refrigerant address "0".
LED 3 (communication between indoor and outdoor units)	Indicates state of communication between the indoor and outdoor units. Make sure that this LED is always blinking.

A.2.13 SAFETY DEVICE SETTING

PKA-RP1.6GAL / PKA-RP2GAL

Safety device \ Model	PKA-RP1.6GAL	PKA-RP2GAL
Fan motor themal protector	OFF 125±5℃ ON 79±15℃	

PKA-RP2.5FAL / PKA-RP3FAL / PKA-RP4FAL

Safety device \ Model	PKA-RP2.5FAL	PKA-RP2.5FAL	PKA-RP4FAL
Fan motor themal protector	OFF 130±5℃ ON 80±20℃		