Back to Index page

A.5 OUTDOOR UNIT (PUHZ)

A.5.1 FEUTURES A-190
A.5.2 SPECIFICATIONS A-192
A.5.3 OUTLINES AND DIMENSIONS A-195
A.5.4 WIRING DIAGRAM A-197
A.5.5 REFRIGERANT SYSTEM DIAGRAM A-200
A.5.6 NOISE CRITERION CURVES A-202
A.5.7 CAPACITY CURVES A-203
A.5.8 INSTALLATION PROCEDURE A-205
A.5.9 CENTER OF GRAVITY POSITION A-215
A.5.10 SAFETY DEVICE SETTINGS A-216
A.5.11 SYSTEM CONTROLL A-217

A.5.1 FEATURES

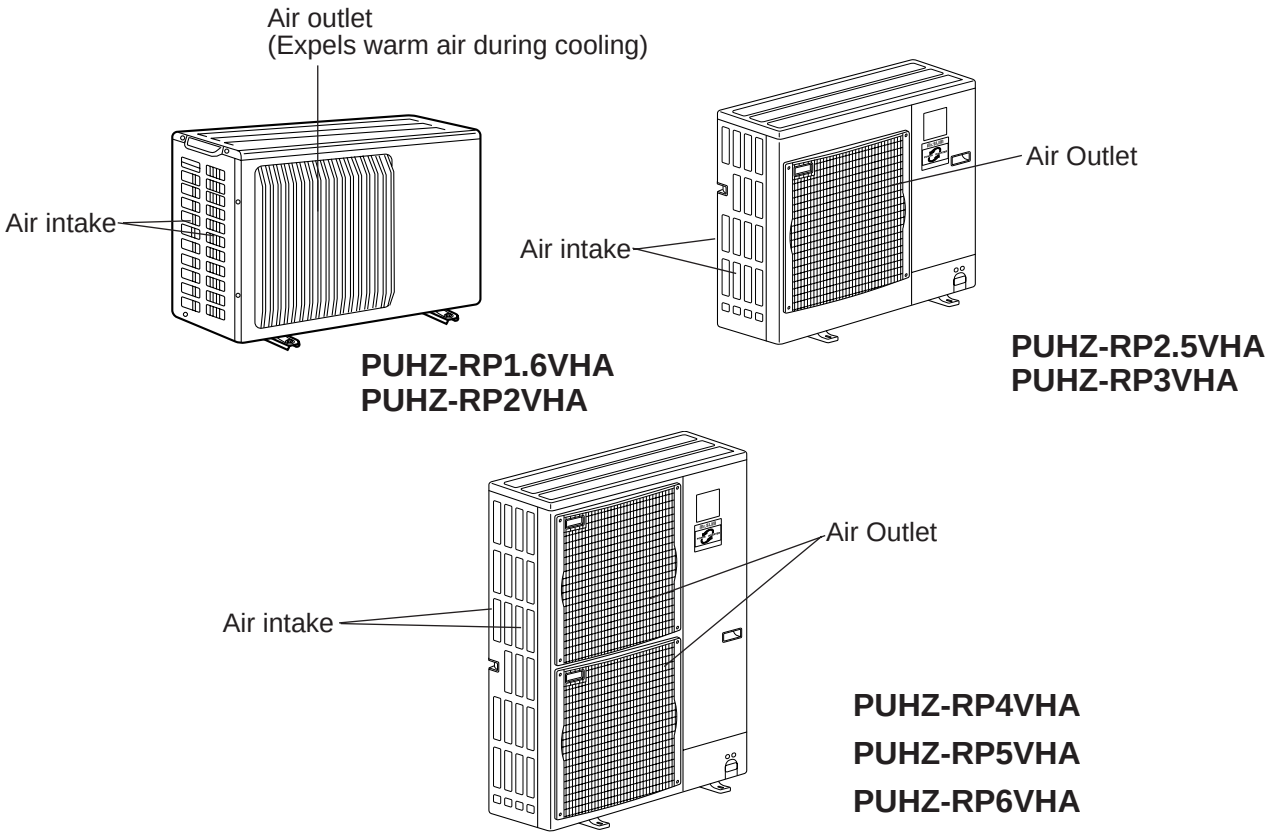

1. More Power for Faster Cooling/Heating

●Higher Cooling / Heating Power

The cooling / heating capacity when outdoor temperatures are low or high and the maximum operating speed of the Power Inverter Mr.Slim have been improved by up to 33% compared to the current model.

●Wider Performance Range

Operation is now possible at lower speeds, thus cutting energy losses produced by the repeated on/off operation of non-inverter models. Comfort is improved while power consumption is reduced.

2. Technological Improvements for Super Quiet Operation

●Silent Operation-Top Level in the Industry

Operation has been made very silent by improvements to the design of the fan blades and the new grille shape. The power inverter is even more silent when outside temperature drop as it automatically switches to low-noise mode to reduce operating noise by 3dB.
(Effective when the mode is set in PCB of outdoor unit)

●Low-Noise Priority Function.

A low-noise priority function is also available by connecting a commercially available timer or selector switch. When a signal is received from timer or switch, the unit runs in low-noise priority mode.

	R22	R407C	R410A	
	Non-Inverter		Inverter	
1.6HP	49	47	46	43
2HP	49	48	46	43
2.5HP	52	48	47	44
3HP	52	49	47	44
4HP	54	51	49	46
5HP	55	55	50	47
6HP	56	57	50	48

3. Longer Maximum Refrigerant Piping Length: 75Metres

By additional filling with refrigerant, it is now possible to have pipes up to 75 metres long, making it easier to select a layout install the unit.

Max piping Lenght can be streched to 75m		
	Max Height difference	Max.piping length
PUHZ-RP1.6/2	30m	50m
PUHZ-RP2.5/3	30m	50m
PUHZ-RP4/5/6	30m	75m

4. Mitsubishi Electric's Cleaning-Free Technology

●New HAB Refrigerant Oil (PUHZ-RP1.6/2/2.5/3HP Features)

The Power inverter Mr.SLIM is the first in the industry to use hard alkyl benzene (HAB) oil -a unique refrigerant oil that degrades very slowly -for refrigeration. Emoploying our exclusive cleaning- free technologies such as a specially developed high-efficiency oil separator and optimum distribution of heat exchangers to prevent oil stagnation, we have made it possible to reuse previously installed pipeworks.

●Exclusive Replacement Filter (PUHZ-RP4/5/6 Features)

The refrigerant oil (ester oil) used for the 4~6HP models will degrade when mixed with chemicals such as chloride found in existing pipes. To prevent oil degradation and make it possible to reuse existing pipes, Mitsubishi Electric has developed an exclusive replacement filter that uses activated charcoal to soak up chlorides.

A.5.2 SPECIFICATIONS

Service Ref.				PUHZ-RP1.6VHA		PUHZ-RP2VHA	
Function				Cooling	Heating	Cooling	Heating
OUTDOOR UNIT	Power supply (phase, cycle, voltage)			Single, 50Hz, 220-230-240V			
	Running current		A	4.01	4.23	6.16	6.47
	External finish			Munsell 3Y 7.8/1.1			
	Refrigerant control			Linear Expansion Valve			
	Compressor			Hermetic			
	Model			SNB130FLBH			
	Motor output		kW	0.8		1.1	
	Starter type			Line start			
	Protection devices			HP switch Discharge thermo		HP switch Discharge thermo	
	Crankcase heater		W	—			
	Heat exchanger			Plate fin coil			
	Fan	Fan(drive) × No.		Propeller fan × 1			
		Fan motor output	kW	0.043			
		Airflow	m³/min(CFM)	35(1,240)			
	Defrost method			Reverse cycle			
	Noise level	Cooling	dB	44			
		Heating	dB	46			
	Dimensions	W	mm(in.)	800(31-1/2)			
		D	mm(in.)	330+23(11-13/16+7/8)			
		H	mm(in.)	600(23-5/8)			
	Weight		kg(lbs)	45(99)			
	Refrigerant			R410A			
	Charge		kg(lbs)	2.5(5.5)			
	Oil (Model)		L	0.45(NEO22)			
REFRIGERANT PIPING	Pipe size O.D.	Liquid	mm(in.)	6.35(1/4)			
		Gas	mm(in.)	12.7(1/2)			
	Connection method	Indoor side		Flared			
		Outdoor side		Flared			
	Between the indoor & outdoor unit	Height difference		Max. 30m			
		Piping length		Max. 50m			

Notes1. Rating Conditions (ISO T1)
Cooling : Indoor : D.B. 27˚C(80˚F), W.B. 19˚C(66˚F) Outdoor : D.B. 35˚C(95˚F), W.B. 24˚C(75˚F)
Heating : Indoor : D.B. 20˚C(68˚F) Outdoor : D.B. 7˚C(45˚F), W.B. 6˚C(43˚F)
Refrigerant piping length (one way) : 5m (16ft)

2. Guaranteed operating range

		Indoor	Outdoor
Cooling	Upper limit	D.B. 35˚C, W.B. 22.5˚C	D.B. 46˚C
	Lower limit	D.B. 19˚C, W.B. 15˚C	D.B. -5˚C
Heating	Upper limit	D.B. 28˚C	D.B. 21˚C, W.B. 15˚C
	Lower limit	D.B. 17˚C	D.B. -11˚C, W.B. -12˚C

3. Guaranteed voltage
198~264V, 50Hz

4. Above data based on indicated voltage
Indoor Unit 1 phase 230V 50Hz
Outdoor Unit 1 phase 230V 50Hz

5. Refer to the data book of indoor unit for tha indoor unit's specifications.

Service Ref.				PUHZ-RP2.5VHA		PUHZ-RP3VHA		PUHZ-RP4VHA	
Function				Cooling	Heating	Cooling	Heating	Cooling	Heating
OUTDOOR UNIT	Power supply (phase, cycle, voltage)			Single, 50Hz, 220-230-240V					
	Running current		A	8.04	9.74	8.04	9.70	12.33	13.94
	External finish			Munsell 3Y 7.8/1.1					
	Refrigerant control			Linear Expansion Valve					
	Compressor			Hermetic					
	Model			TNB220FMBH				ANV33FDAMT	
	Motor output		kW	1.4		1.6		1.9	
	Starter type			Line start					
	Protection devices			HP switch Discharge thermo				HP switch LP switch Discharge thermo	
	Crankcase heater		W	—					
	Heat exchanger			Plate fin coil					
	Fan	Fan(drive) × No.		Propeller fan × 1				Propeller fan × 2	
		Fan motor output	kW	0.060				0.060+0.060	
		Airflow	m³/min(CFM)	55(1,940)				100(3,530)	
	Defrost method			Reverse cycle					
	Noise level	Cooling	dB	47				49	
		Heating	dB	48				51	
	Dimensions	W	mm(in.)	950(37-3/8)					
		D	mm(in.)	330+30(13+1-3/16)					
		H	mm(in.)	943(37-1/8)				1,350(53-1/8)	
	Weight		kg(lbs)	75(165)				121(267)	
	Refrigerant			R410A					
	Charge		kg(lbs)	3.5(7.7)				5.5(12.1)·····RP4VHA 5.0(11.0)·····RP4VHA	
	Oil (Model)		L	0.87(NEO22)				1.40(MEL56)	
REFRIGERANT PIPING	Pipe size O.D.	Liquid	mm(in.)	9.52(3/8)					
		Gas	mm(in.)	15.88(5/8)					
	Connection method	Indoor side		Flared					
		Outdoor side		Flared					
	Between the indoor & outdoor unit	Height difference		Max. 30m					
		Piping length		Max. 50m				Max. 75m	

Notes1. Rating Conditions (ISO T1)
Cooling : Indoor : D.B. 27˚C(80˚F), W.B. 19˚C(66˚F) Outdoor : D.B. 35˚C(95˚F), W.B. 24˚C(75˚F)
Heating : Indoor : D.B. 20˚C(68˚F) Outdoor : D.B. 7˚C(45˚F), W.B. 6˚C(43˚F)
Refrigerant piping length (one way) : 5m (16ft)

2. Guaranteed operating range

		Indoor	Outdoor
Cooling	Upper limit	D.B. 35˚C, W.B. 22.5˚C	D.B. 46˚C
	Lower limit	D.B. 19˚C, W.B. 15˚C	D.B. -5˚C
Heating	Upper limit	D.B. 28˚C	D.B. 21˚C, W.B. 15˚C
	Lower limit	D.B. 17˚C	D.B. -11˚C, W.B. -12˚C

3. Guaranteed voltage
198~264V, 50Hz

4. Above data based on indicated voltage
Indoor Unit 1 phase 230V 50Hz
Outdoor Unit 1 phase 230V 50Hz

5. Refer to the data book of indoor unit for tha indoor unit's specifications.

Service Ref.				PUHZ-RP5VHA		PUHZ-RP6VHA	
Function				Cooling	Heating	Cooling	Heating
OUTDOOR UNIT	Power supply (phase, cycle, voltage)			Single, 50Hz, 220-230-240V			
	Running current		A	15.80	17.50	20.73	20.37
	External finish			Munsell 3Y 7.8/1.1			
	Refrigerant control			Linear Expansion Valve			
	Compressor			Hermetic			
	Model			ANV33FDAMT			
	Motor output		kW	2.4		2.9	
	Starter type			Line start			
	Protection devices			HP switch, LP switch, Discharge thermo			
	Crankcase heater		W	—			
	Heat exchanger			Plate fin coil			
	Fan	Fan(drive) × No.		Propeller fan × 2			
		Fan motor output	kW	0.060 +0.060			
		Airflow	m³/min(CFM)	100(3,530)			
	Defrost method			Reverse cycle			
	Noise level	Cooling	dB	50			
		Heating	dB	52			
	Dimensions	W	mm(in.)	950(37-3/8)			
		D	mm(in.)	330+30(13+1-3/16)			
		H	mm(in.)	1,350(53-1/8)			
	Weight		kg(lbs)	121(267)			
	Refrigerant			R410A			
	Charge		kg(lbs)	5.5(12.1)·····RP5, 6VHA 5.0(11.0)·····RP5, 6VHA			
	Oil (Model)		L	1.40(MEL56)			
REFRIGERANT PIPING	Pipe size O.D.	Liquid	mm(in.)	9.52(3/8)			
		Gas	mm(in.)	15.88(5/8)			
	Connection method	Indoor side		Flared			
		Outdoor side		Flared			
	Between the indoor & outdoor unit	Height difference		Max. 30m			
		Piping length		Max. 75m			

Notes1. Rating Conditions (ISO T1)
Cooling : Indoor : D.B. 27˚C(80˚F), W.B. 19˚C(66˚F) Outdoor : D.B. 35˚C(95˚F), W.B. 24˚C(75˚F)
Heating : Indoor : D.B. 20˚C(68˚F) Outdoor : D.B. 7˚C(45˚F), W.B. 6˚C(43˚F)
Refrigerant piping length (one way) : 5m (16ft)

2. Guaranteed operating range

		Indoor	Outdoor
Cooling	Upper limit	D.B. 35˚C, W.B. 22.5˚C	D.B. 46˚C
	Lower limit	D.B. 19˚C, W.B. 15˚C	D.B. -5˚C
Heating	Upper limit	D.B. 28˚C	D.B. 21˚C, W.B. 15˚C
	Lower limit	D.B. 17˚C	D.B. -11˚C, W.B. -12˚C

3. Guaranteed voltage
198~264V, 50Hz

4. Above data based on indicated voltage
Indoor Unit 1 phase 230V 50Hz
Outdoor Unit 1 phase 230V 50Hz

5. Refer to the service manual of indoor unit for tha indoor unit's specifications.

A.5.3 OUTLINES AND DIMENSIONS

PUHZ-RP1.6VHA
PUHZ-RP2VHA

Unit : mm

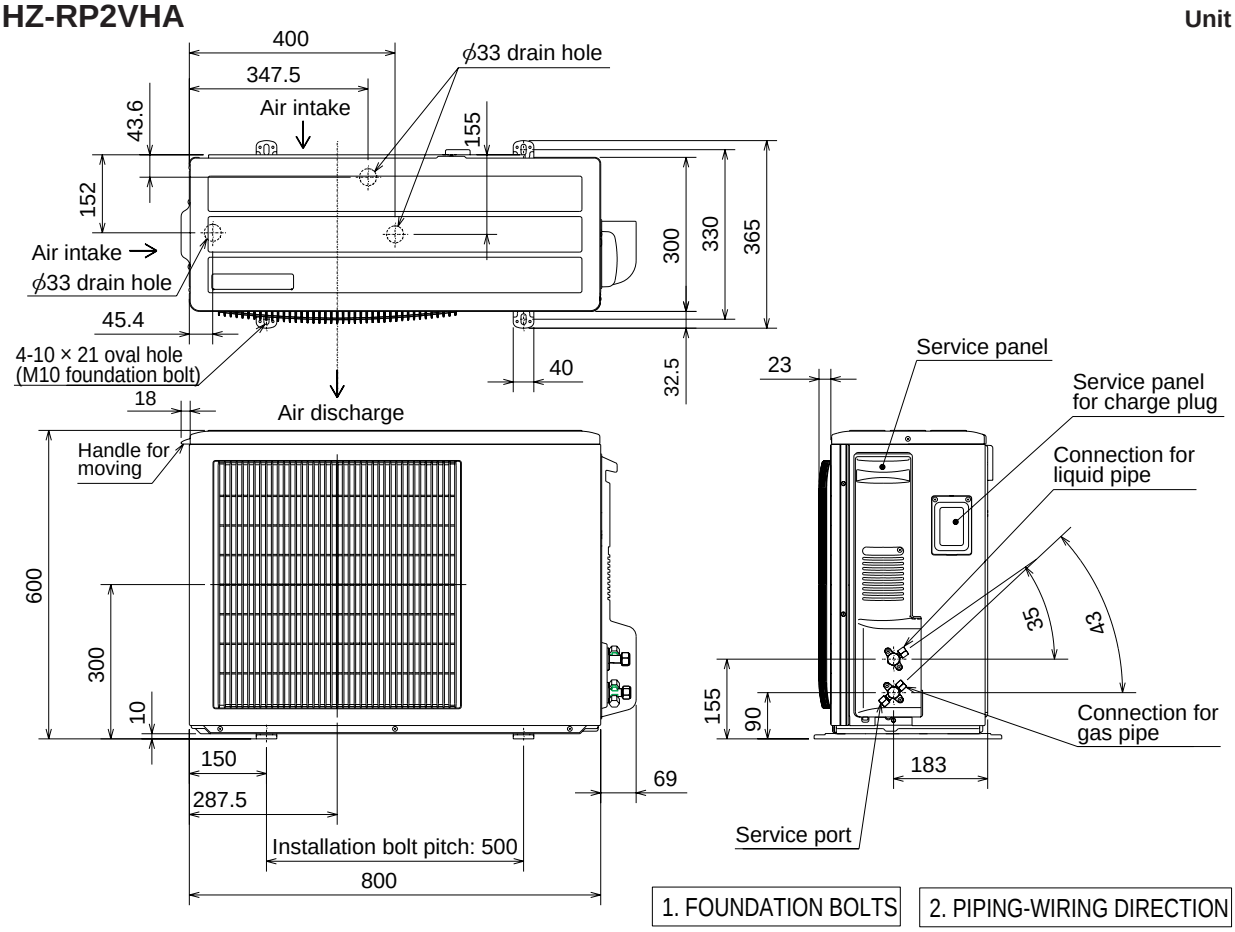

1. FOUNDATION BOLTS

Please secure the unit firmly with 4 foundation (M10) bolts. (Bolts, washer and nut must be purchased locally.)

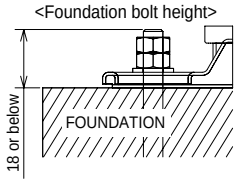

2. PIPING-WIRING DIRECTION

Piping and wiring connection can be made from the rear direction only.

3. ATTACHING THE CONDUIT

In order to attach the conduit, it is necessary to fix the metal plate with 2 screws to the back panel. Procure the metal plate and make screw holes locally. It is recommended to use the metal plate shown below. Align the metal plate to the marks on the unit and attach it.

※ The position and the size of conduit hole depend on the conduit to be used.

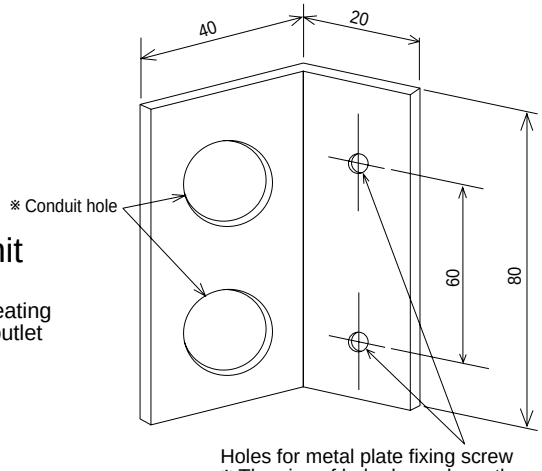

Free space around the outdoor unit (basic example)

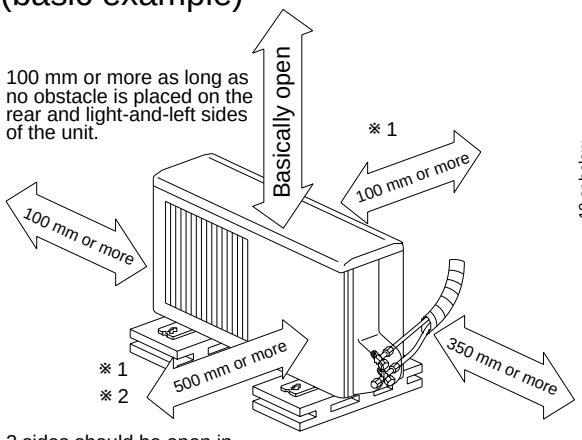

2 sides should be open in the right, left and rear side.

Minimum installation space for outdoor unit

※ 1 In the place where short cycle tends to occur, cooling and heating capacity and power consumption might get lowered 10%. Air outlet guide (optional PAC-SG58SG) will help them improve.

※ 2 If air discharges to the wall, the surface might get stained.

Unit : mm

PUHZ-RP2.5VHA
PUHZ-RP3VHA

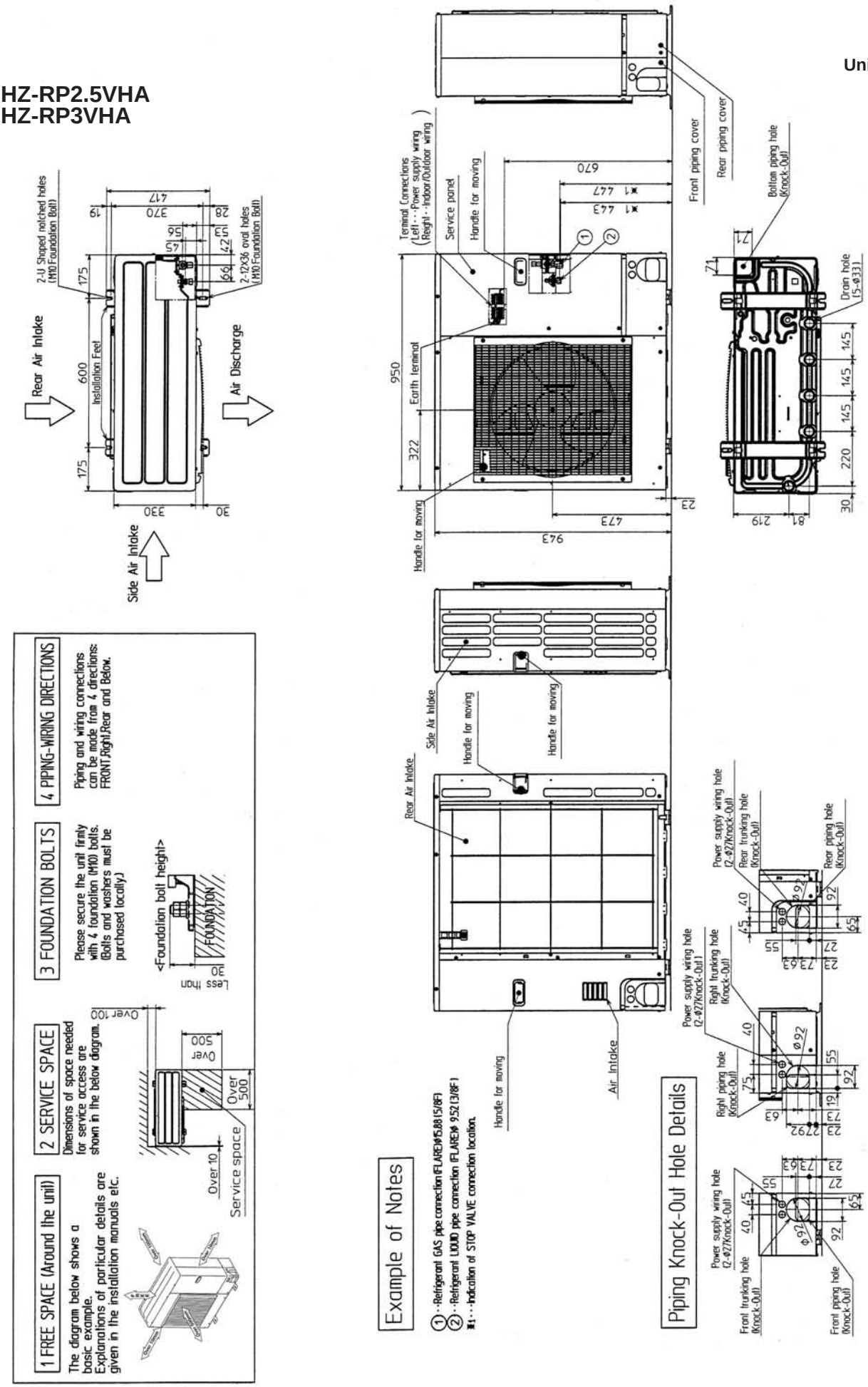

Unit : mm

PUHZ-RP4VHA
PUHZ-RP5VHA
PUHZ-RP6VHA

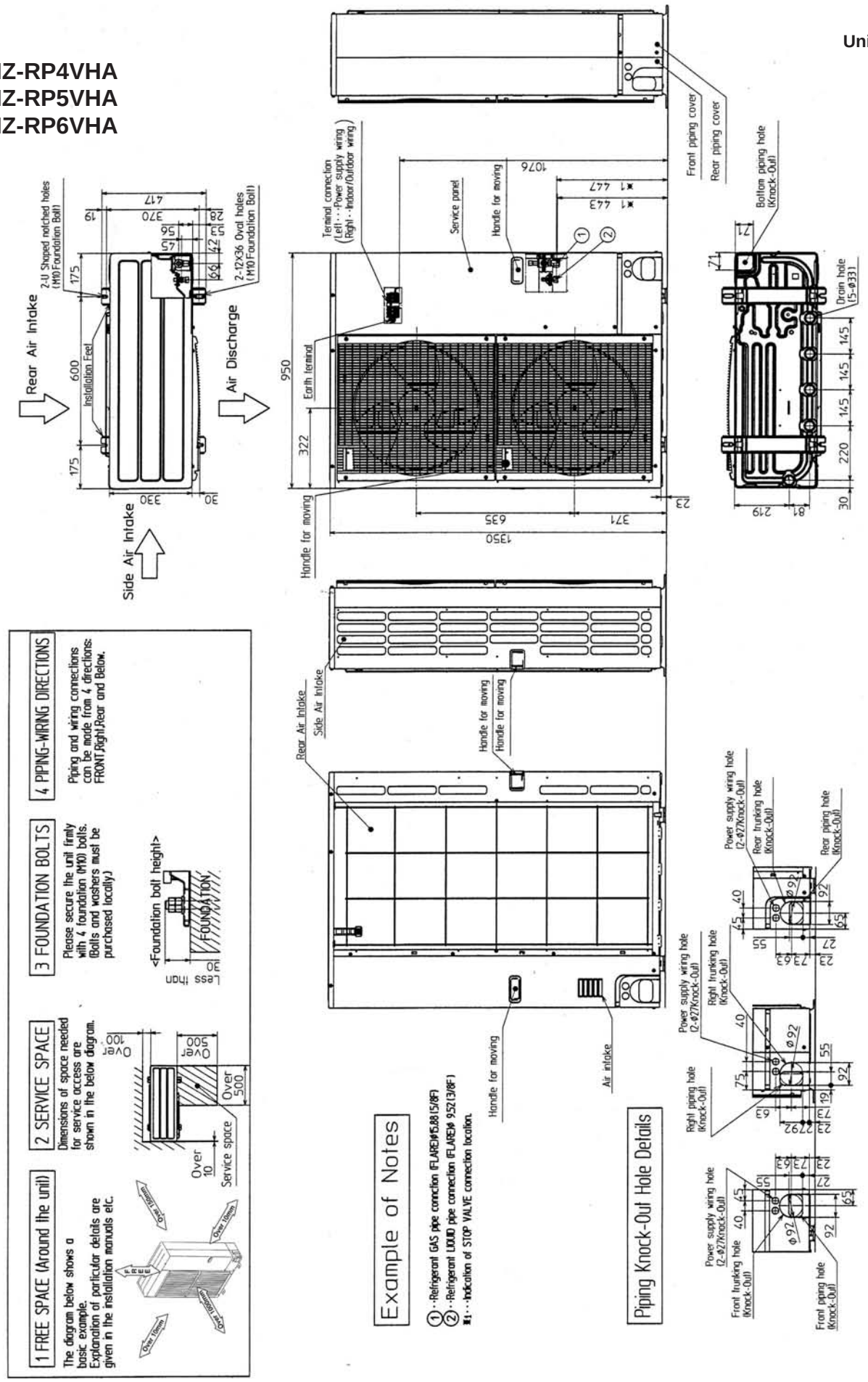

A.5.4 WIRING DIAGRAM

PUHZ-RP1.6VHA
PUHZ-RP2VHA
PUHZ-RP2.5VHA
PUHZ-RP3VHA

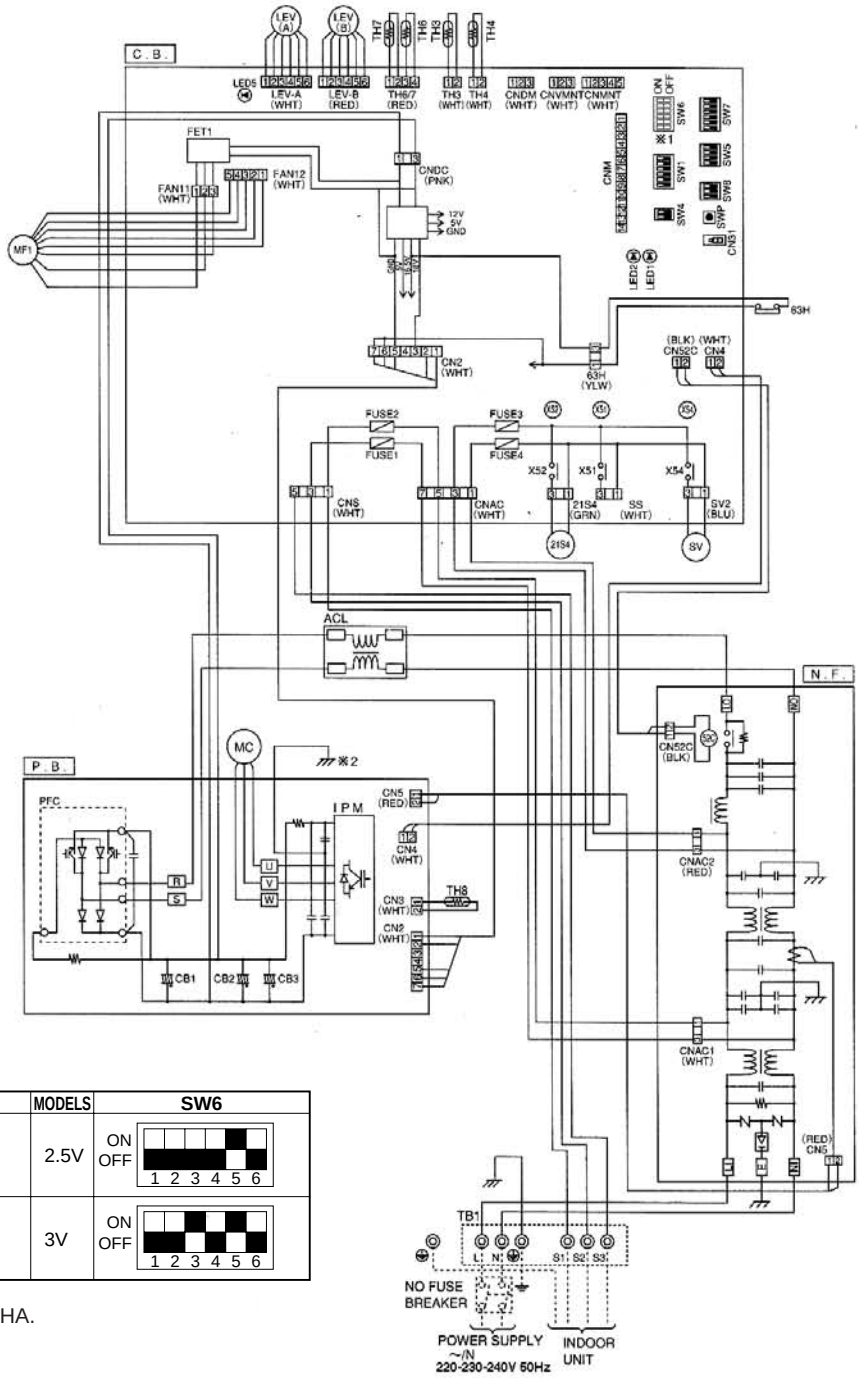

※1 MODEL SELECT

MODELS	SW6	MODELS	SW6
1.6V	ON / OFF 1 2 3 4 5 6	2.5V	ON / OFF 1 2 3 4 5 6
2V	ON / OFF 1 2 3 4 5 6	3V	ON / OFF 1 2 3 4 5 6

※2 Only PUHZ-RP2.5, 3VHA.

SYMBOL	NAME
TB1	Terminal Block (Power Supply, Indoor/Outdoor)
MC	Motor for Compressor
MF1	Fan Motors
21S4	Solenoid Valve (Four-Way Valve)
63H	High Pressure Switch
SV	Solenoid Valve (Bypass Valve)
TH3	Thermistor (Outdoor Pipe)
TH4	Thermistor (Discharge)
TH6	Thermistor (Outdoor 2-Phase Pipe)
TH7	Thermistor (Outdoor)
TH8	Thermistor (Heat sink)
LEV(A),LEV(B)	Linear Expansion Valve
ACL	Reactors
P.B.	Power Circuit Board
R/S	Connection Terminal (L/N-Phase)
U/V/W	Connection Terminal (U/V/W-Phase)
CN2~5	Connector
PFC	Converter
IPM	Inverter
CB1~CB3	Main Smoothing Capacitor

SYMBOL	NAME
N.F.	Noise Filter Circuit Board
LI/LO	Connection Terminal (L-Phase)
NI/NO	Connection Terminal (N-Phase)
E	Connection Terminal (Ground)
CNAC1/2	Connector
CN5	Connector
CN52C	Connector
52C	52C Relay
C.B.	Controller Circuit Board
SW1	Switch (Forced Defrost, Defect History Record Reset, Refrigerant Address)
SW4	Switch (Test Operation)
SW5	Switch (Function Switch)
SW6	Switch (Model Select)
SW7	Switch (Function Setup)
SW8	Switch
LED1,LED2	Light Emitting Diodes (Operation Inspection Indicators)
LED5	Light Emitting Diodes (MF1 Operation Status Indicators)

SYMBOL	NAME
FUSE1~4	Fuse (6.3 A)
SWP	Switch (Pump Down)
CN31	Connector (Emergency Operation)
CNAC	Connector
CNDC	Connector
CNS	Connector
FAN11	Connector
FAN12	Connector
SS	Connector (Connection for Option)
SV2	Connector
CNM	Connector (A-Control Service Inspection Kit)
CNMNT	Connector (Connected to Optional M-NET Adapter Board)
CNVMNT	Connector (Connected to Optional M-NET Adapter Board)
CNDM	Connector (Connected for Option (Contact Input))
X51,X52,X54	Reray
FET1	MF1 Drive Element

PUHZ-RP4VHA
PUHZ-RP5VHA
PUHZ-RP6VHA

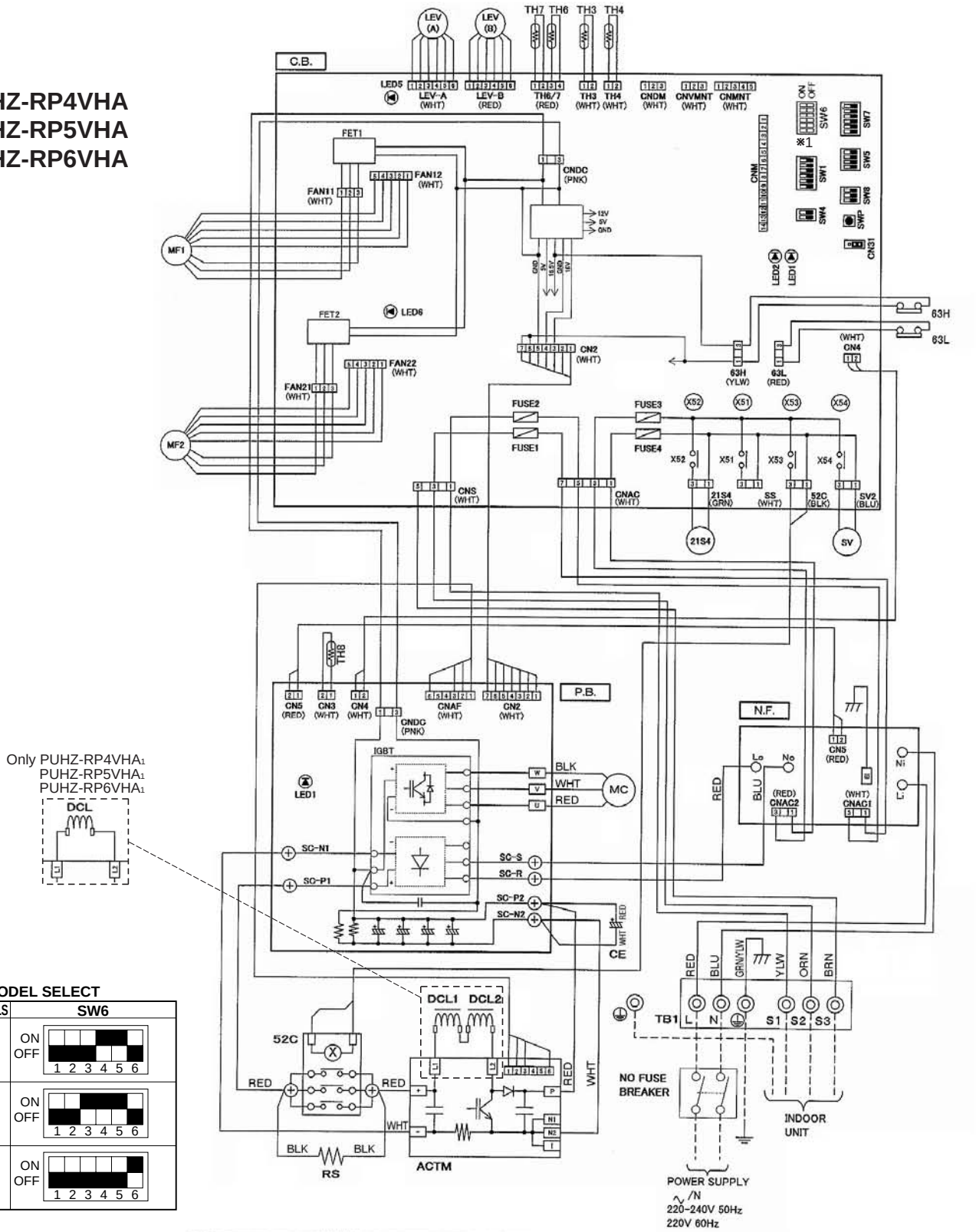

※1 MODEL SELECT

MODELS	SW6
4V	ON / OFF — 1 2 3 4 5 6
5V	ON / OFF — 1 2 3 4 5 6
6V	ON / OFF — 1 2 3 4 5 6

SYMBOL	NAME
TB1	Terminal Block (Power Supply, Indoor/Outdoor)
MC	Motor for Compressor
MF1,MF2	Fan Motors
21S4	Solenoid Valve (Four-Way Valve)
SV	Solenoid Valve (Bypass Valve)
63H	High Pressure Switch
63L	Low Pressure Switch
TH3	Thermistor (Outdoor Pipe)
TH4	Thermistor (Discharge)
TH6	Thermistor (Outdoor 2-Phase Pipe)
TH7	Thermistor (Outdoor)
TH8	Thermistor (Heat sink)
LEV(A),LEV(B)	Linear Expansion Valve
DCL1, DCL2	Reactors (RP4-6VHA)
DCL	Reactor (RP4-6VHA1)
52C	52C Relay
RS	Rush Current Protect Resistor
ACTM	Active Filter Module
CE	Main Smoothing Capacitor
P.B.	Power Circuit Board
U/V/W	Connection Terminal (U/V/W-Phase)

SYMBOL	NAME
SC-R/S	Screw Type Terminal (L/N-Phase)
SC-P1, P2	Screw Type Terminal (DC Voltage)
SC-N1, N2	Screw Type Terminal (DC Voltage)
CN2~5	Connector
CNDC	Connector
CNAF	Connector
IGBT	Converter, Inverter
LED1	Light Emitting Diodes (Inverter Control Status)
N.F.	Noise Filter Circuit Board
LI/LO	Connection Lead (L-Phase)
NI/NO	Connection Lead (N-Phase)
EI	Connection Terminal (Ground)
CNAC1/2	Connector
CN5	Connector
C.B.	Controller Circuit Board
FUSE1~4	Fuse (6.3 A)
SW1	Switch (Forced Defrost, Defect History Record Reset, Refrigerant Address)
SW4	Switch (Test Operation)
SW5	Switch (Function Switch)
SW6	Switch (Model Select)

SYMBOL	NAME
SW7	Switch (Function Setup)
SW8	Switch
SWP	Switch (Pump Down)
CN31	Connector (Emergency Operation)
LED1,LED2	Light Emitting Diodes (Operation Inspection Indicators)
LED5/6	Light Emitting Diodes (MF1/MF2 Operation Status Indicators)
CNAC	Connector
CNDC	Connector
CNS	Connector
FAN11	Connector
FAN12	Connector
FAN21	Connector
FAN22	Connector
SS	Connector (Connection for Option)
SV2	Connector
CNM	Connector (A-Control Service Inspection Kit)
CNMNT	Connector (Connected to Optional M-NET Adapter Board)
CNVMNT	Connector (Connected to Optional M-NET Adapter Board)
CNDM	Connector (Connected for Option (Contact Input))

A.5.5 PEFRIGERANT SYSTEM DIAGRAM

PUHZ-RP1.6VHA
PUHZ-RP2VHA

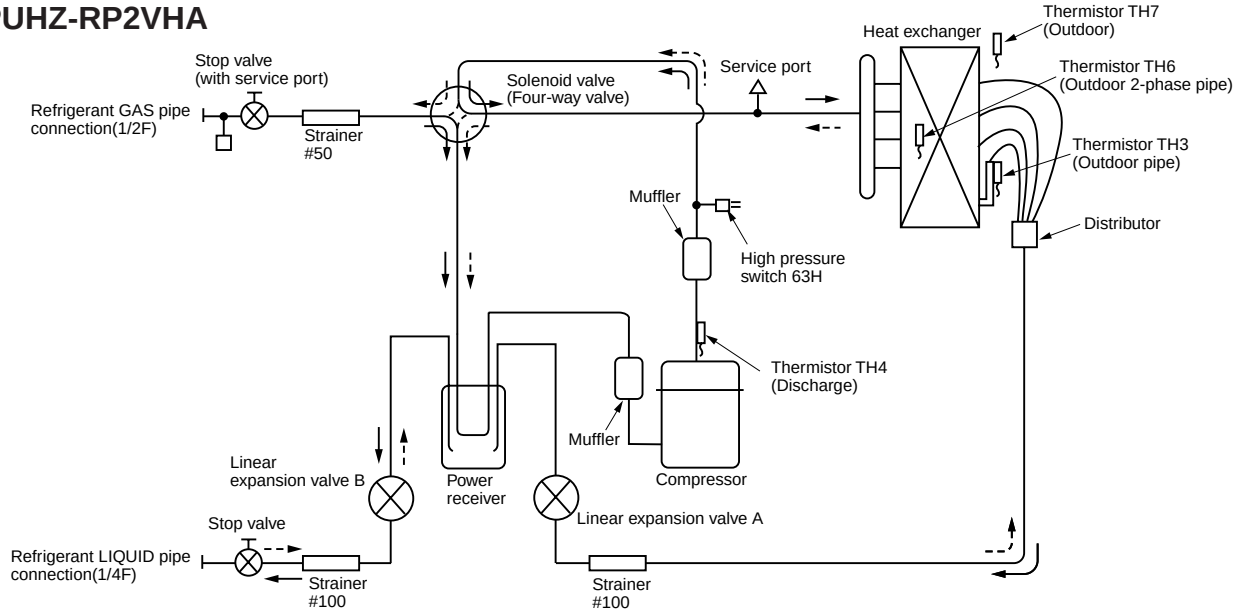

PUHZ-RP2.5VHA
PUHZ-RP3VHA

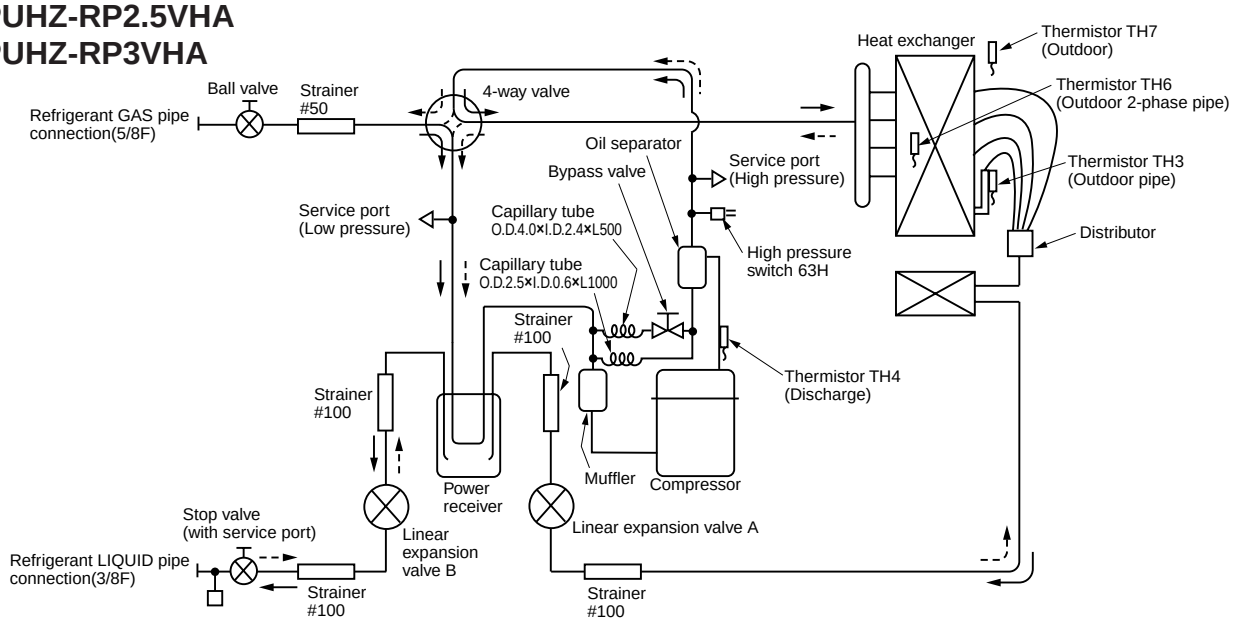

PUHZ-RP4VHA
PUHZ-RP5VHA
PUHZ-RP6VHA

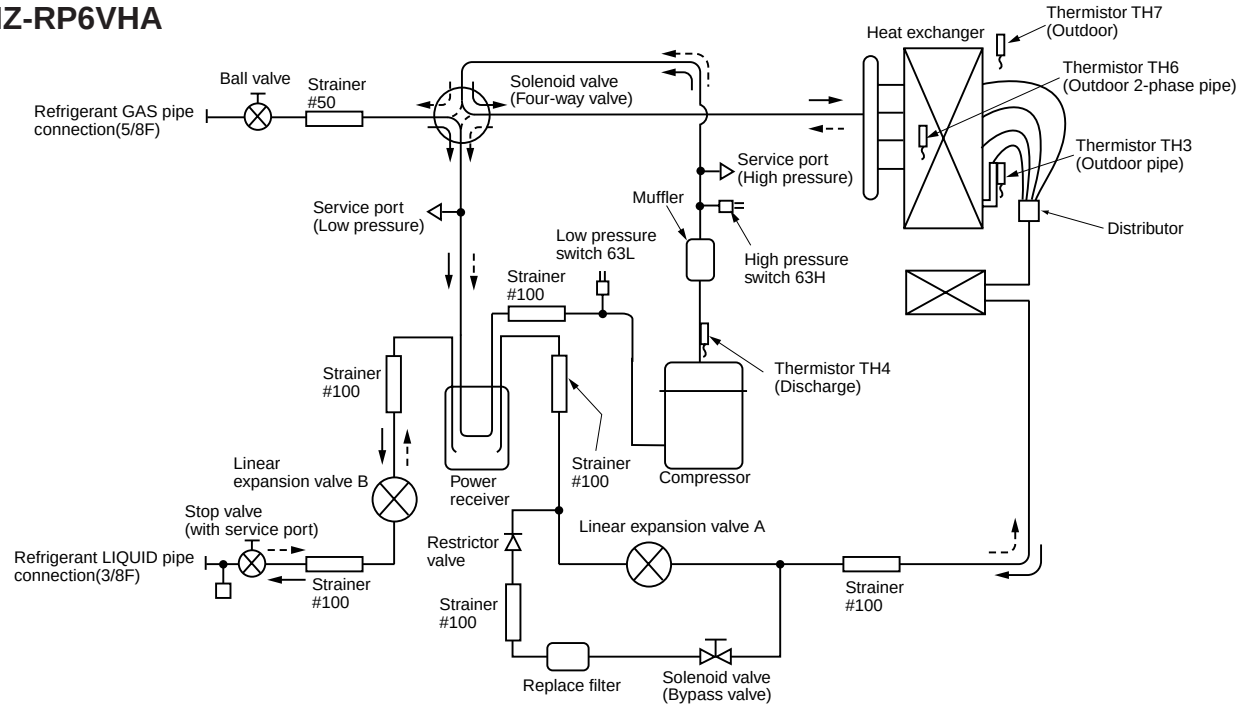

A.5.6 NOISE CRITERIA CURVES

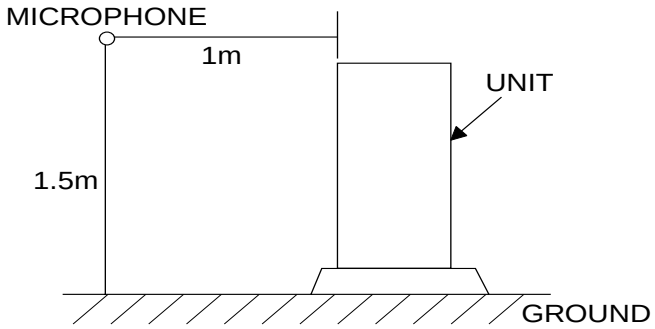

PUHZ-RP1.6VHA
PUHZ-RP2VHA

MODE	SPL(dB)	LINE
COOLING	46	○——○
HEATING	48	●——●

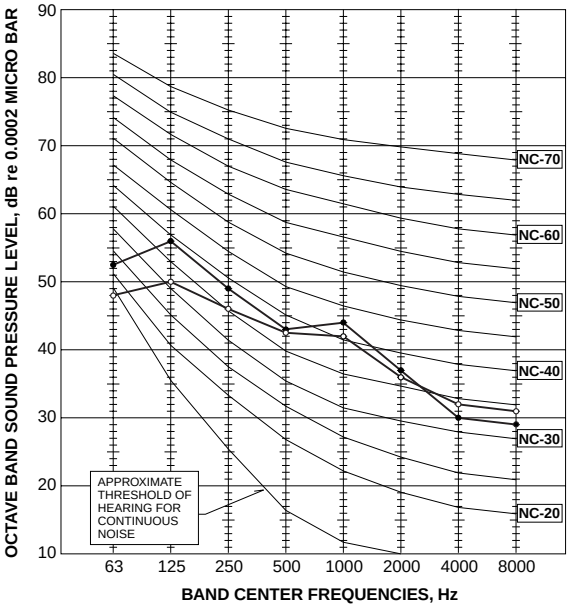

PUHZ-RP2.5VHA
PUHZ-RP3VHA

MODE	SPL(dB)	LINE
COOLING	47	○——○
HEATING	48	●——●

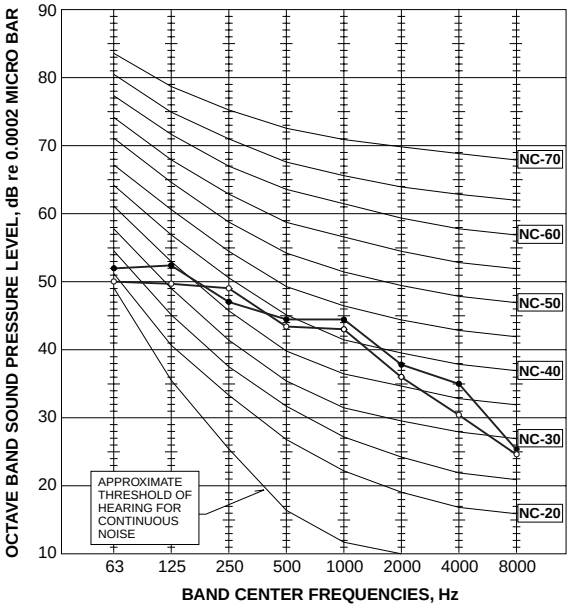

PUHZ-RP4VHA

MODE	SPL(dB)	LINE
COOLING	49	○——○
HEATING	51	●——●

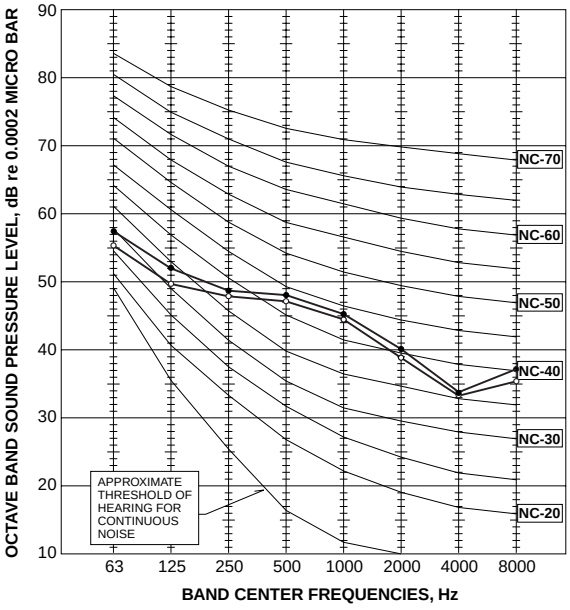

PUHZ-RP5VHA
PUHZ-RP6VHA

MODE	SPL(dB)	LINE
COOLING	50	○——○
HEATING	52	●——●

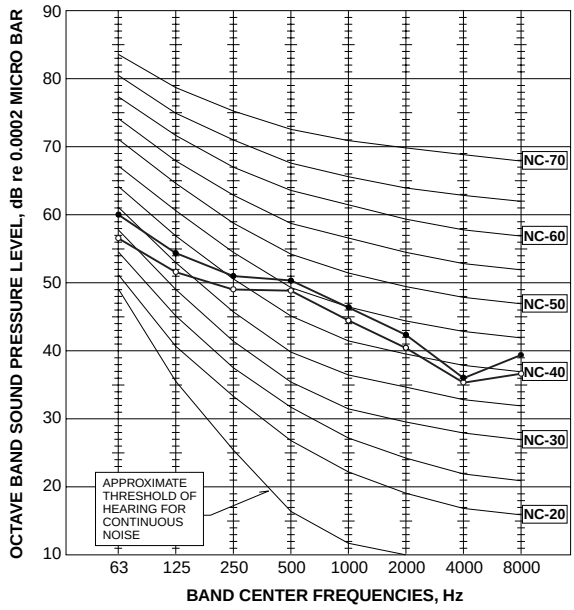

A.5.7 CAPACITY CURVES
(Variation of capacity depending on pipe length)

① Capacity curves for PUHZ-RP • HA model <Standard size>

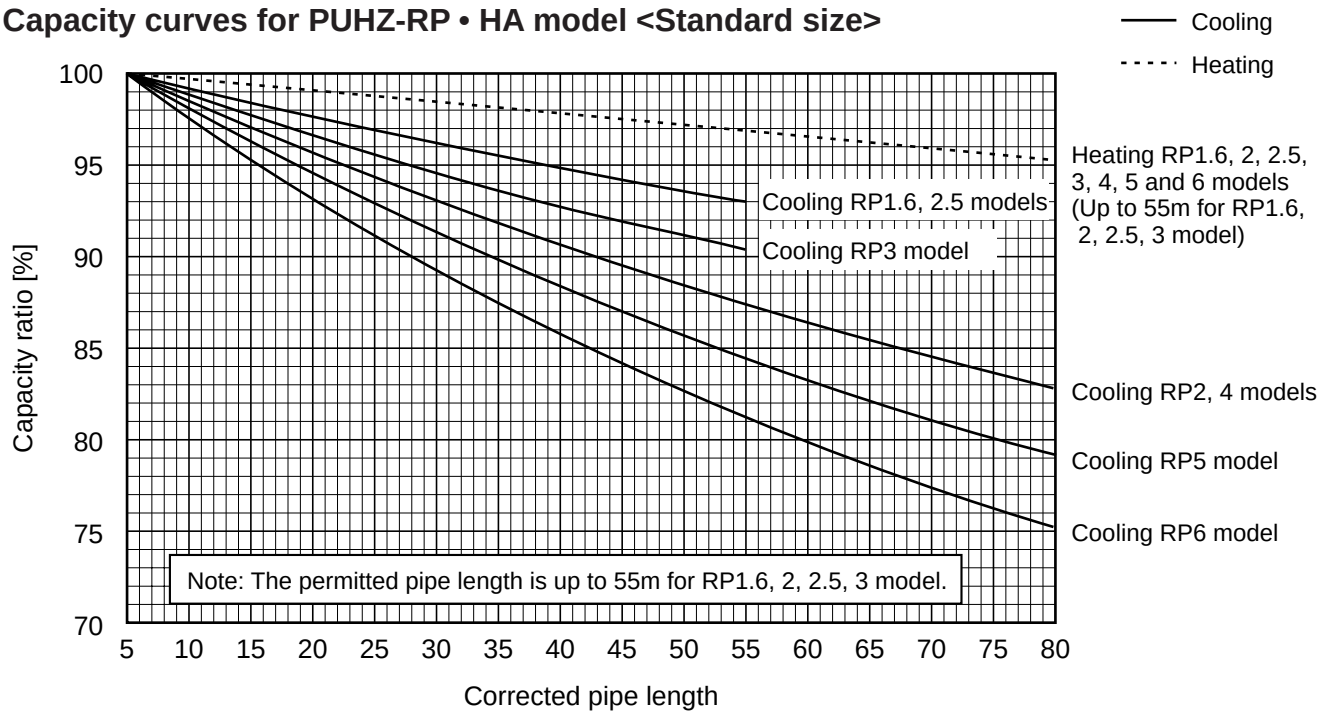

② Capacity curve for PUHZ-RP1.6, 2 models
<When gas pipe is one size smaller than standard size>

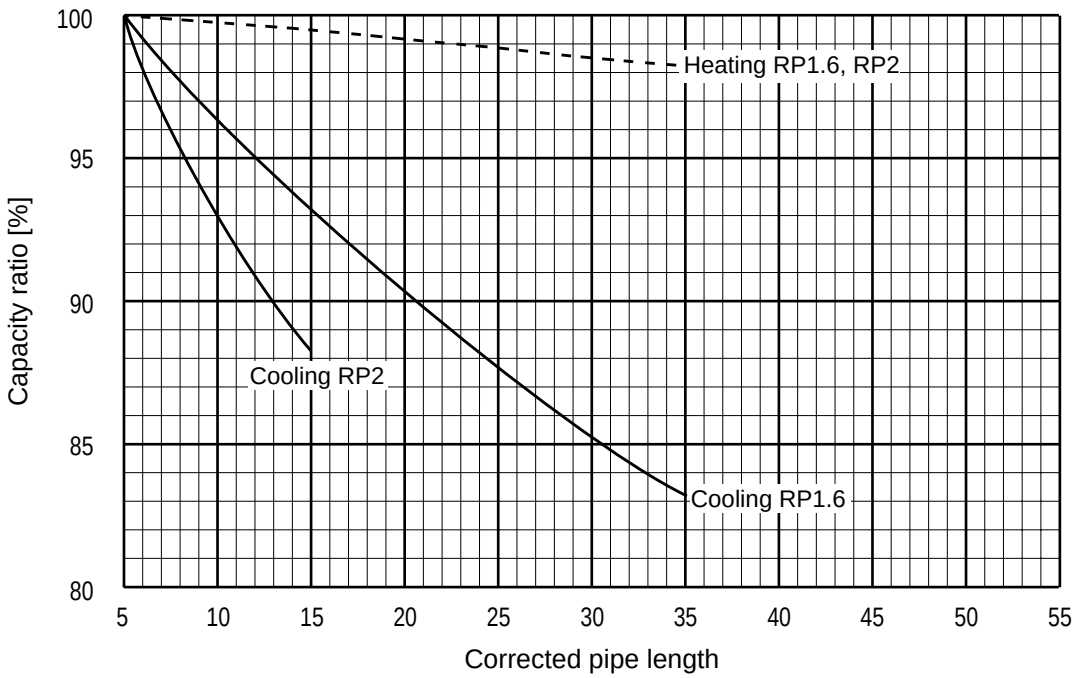

③ Capacity curve for PUHZ-RP2.5, 3 models

<When gas pipe is one size smaller then standard size>

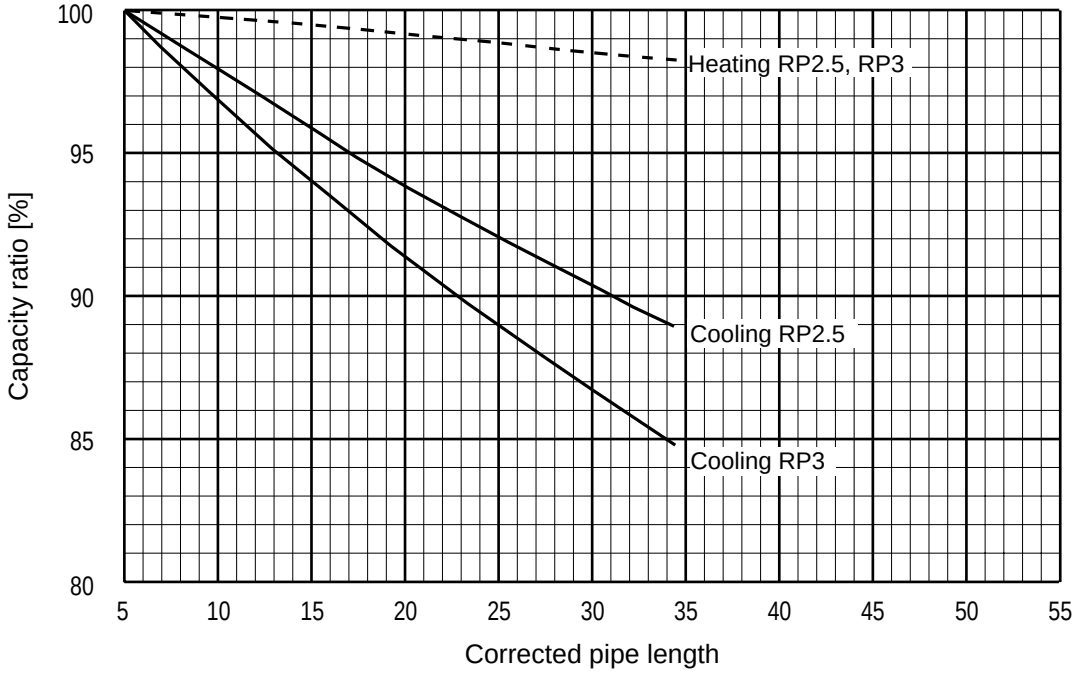

④ When gas pipe is one size larger than standard size for PUHZ-RP4, 5 and 6.

<1. Capacity can be obtained by referring to capacity curves of standard size>

A.5.8 INSTALLATION PROCEDURE

1. Safety precautions

- ▶ **Before installing the unit, make sure you read all the "Safety precautions".**
- ▶ **Please report to or take consent by the supply authority before connection to the system.**

⚠ **Warning:**
Describes precautions that must be observed to prevent danger of injury or death to the user.

⚠ **Caution:**
Describes precautions that must be observed to prevent damage to the unit.

After installation work has been completed, explain the "Safety Precautions," use, and maintenance of the unit to the customer according to the information in the Operation Manual and perform the test run to ensure normal operation. Both the Installation Manual and Operation Manual must be given to the user for keeping. These manuals must be passed on to subsequent users.

⃠ : Indicates an action that must be avoided.
❗ : Indicates that important instructions must be followed.
⏚ : Indicates a part which must be grounded.
: Indicates that caution should be taken with rotating parts.
: Indicates that the main switch must be turned off before servicing.
: Beware of electric shock.
: Beware of hot surface.
ELV : At servicing, please shut down the power supply for both the Indoor and Outdoor Unit.

⚠ **Warning:**
Carefully read the labels affixed to the main unit.

⚠ **Warning:**
- **The unit must not be installed by the user. Ask a dealer or an authorized technician to install the unit. If the unit is installed incorrectly, water leakage, electric shock, or fire may result.**
- **For installation work, follow the instructions in the Installation Manual and use tools and pipe components specifically made for use with R410A refrigerant. The R410A refrigerant in the HFC system is pressurized 1.6 times the pressure of usual refrigerants. If pipe components not designed for R410A refrigerant are used and the unit is not installed correctly, the pipes may burst and cause damage or injuries. In addition, water leakage, electric shock, or fire may result.**
- **The unit must be installed according to the instructions in order to minimize the risk of damage from earthquakes, typhoons, or strong winds. An incorrectly installed unit may fall down and cause damage or injuries.**
- **The unit must be securely installed on a structure that can sustain its weight. If the unit is mounted on an unstable structure, it may fall down and cause damage or injuries.**
- **If the air conditioner is installed in a small room, measures must be taken to prevent the refrigerant concentration in the room from exceeding the safety limit in the event of refrigerant leakage. Consult a dealer regarding the appropriate measures to prevent the allowable concentration from being exceeded. Should the refrigerant leak and cause the concentration limit to be exceeded, hazards due to lack of oxygen in the room may result.**
- **Ventilate the room if refrigerant leaks during operation. If refrigerant comes into contact with a flame, poisonous gases will be released.**
- **All electric work must be performed by a qualified technician according to local regulations and the instructions given in this manual. The units must be powered by dedicated power lines and the correct voltage and circuit breakers must be used. Power lines with insufficient capacity or incorrect electrical work may result in electric shock or fire.**
- **Use C1220 copper phosphorus, for copper and copper alloy seamless pipes, to connect the refrigerant pipes. If the pipes are not connected correctly, the unit will not be properly grounded and electric shock may result.**
- **Use only specified cables for wiring. The connections must be made securely without tension on the terminals. If the cables are connected or installed incorrectly, overheating or fire may result.**
- **The terminal block cover panel of the outdoor unit must be firmly attached. If the cover panel is mounted incorrectly and dust and moisture enter the unit, electric shock or fire may result.**
- **When installing or moving the air conditioner, use only the specified refrigerant (R410A) to charge the refrigerant lines. Do not mix it with any other refrigerant and do not allow air to remain in the lines. Air enclosed in the lines can cause pressure peaks resulting in a rupture and other hazards.**
- **Use only accessories authorized by Mitsubishi Electric and ask a dealer or an authorized technician to install them. If accessories are incorrectly installed, water leakage, electric shock, or fire may result.**
- **Do not alter the unit. Consult a dealer for repairs. If alterations or repairs are not performed correctly, water leakage, electric shock, or fire may result.**
- **The user should never attempt to repair the unit or transfer it to another location. If the unit is installed incorrectly, water leakage, electric shock, or fire may result. If the air conditioner must be repaired or moved, ask a dealer or an authorized technician.**
- **After installation has been completed, check for refrigerant leaks. If refrigerant leaks into the room and comes into contact with the flame of a heater or portable cooking range, poisonous gases will be released.**

1.1. Before installation

⚠ **Caution:**
- **Do not use the unit in an unusual environment. If the air conditioner is installed in areas exposed to steam, volatile oil (including machine oil), or sulfuric gas, areas exposed to high salt content such as the seaside, or areas where the unit will be covered by snow, the performance can be significantly reduced and the internal parts can be damaged.**
- **Do not install the unit where combustible gases may leak, be produced, flow, or accumulate. If combustible gas accumulates around the unit, fire or explosion may result.**
- **The outdoor unit produces condensation during the heating operation. Make sure to provide drainage around the outdoor unit if such condensation is likely to cause damage.**
- **When installing the unit in a hospital or communications office, be prepared for noise and electronic interference. Inverters, home appliances, high-frequency medical equipment, and radio communications equipment can cause the air conditioner to malfunction or breakdown. The air conditioner may also affect medical equipment, disturbing medical care, and communications equipment, harming the screen display quality.**

1.2. Before installation (relocation)

⚠ **Caution:**
- **Be extremely careful when transporting the units. Two or more persons are needed to handle the unit, as it weighs 20 kg or more. Do not grasp the packaging bands. Wear protective gloves to remove the unit from the packaging and to move it, as you can injure your hands on the fins or other parts.**
- **Be sure to safely dispose of the packaging materials. Packaging materials, such as nails and other metal or wooden parts may cause stabs or other injuries.**
- **The base and attachments of the outdoor unit must be periodically checked for looseness, cracks or other damage. If such defects are left uncorrected, the unit may fall down and cause damage or injuries.**
- **Do not clean the air conditioner unit with water. Electric shock may result.**
- **Tighten all flare nuts to specification using a torque wrench. If tightened too much, the flare nut can break after an extended period and refrigerant can leak out.**

1. Safety precautions

1.3. Before electric work

⚠ Caution:

- **Be sure to install circuit breakers. If not installed, electric shock may result.**
- **For the power lines, use standard cables of sufficient capacity. Otherwise, a short circuit, overheating, or fire may result.**
- **When installing the power lines, do not apply tension to the cables. If the connections are loosened, the cables can snap or break and overheating or fire may result.**
- **Be sure to ground the unit. Do not connect the ground wire to gas or water pipes, lighting rods, or telephone grounding lines. If the unit is not properly grounded, electric shock may result.**
- **Use circuit breakers (ground fault interrupter, isolating switch (+B fuse), and molded case circuit breaker) with the specified capacity. If the circuit breaker capacity is larger than the specified capacity, breakdown or fire may result.**

1.4. Before starting the test run

⚠ Caution:

- **Turn on the main power switch more than 12 hours before starting operation. Starting operation just after turning on the power switch can severely damage the internal parts. Keep the main power switch turned on during the operation season.**
- **Before starting operation, check that all panels, guards and other protective parts are correctly installed. Rotating, hot, or high voltage parts can cause injuries.**
- **Do not touch any switch with wet hands. Electric shock may result.**
- **Do not touch the refrigerant pipes with bare hands during operation. The refrigerant pipes are hot or cold depending on the condition of the flowing refrigerant. If you touch the pipes, burns or frostbite may result.**
- **After stopping operation, be sure to wait at least five minutes before turning off the main power switch. Otherwise, water leakage or breakdown may result.**

1.5. Using R410A refrigerant air conditioners

⚠ Caution:

- **Use C1220 copper phosphorus, for copper and copper alloy seamless pipes, to connect the refrigerant pipes. Make sure the insides of the pipes are clean and do not contain any harmful contaminants such as sulfuric compounds, oxidants, debris, or dust. Use pipes with the specified thickness. (Refer to page 5) Note the following if reusing existing pipes that carried R22 refrigerant.**
  - Replace the existing flare nuts and flare the flared sections again.
  - Do not use thin pipes. (Refer to page 5)
- **Store the pipes to be used during installation indoors and keep both ends of the pipes sealed until just before brazing. (Leave elbow joints, etc. in their packaging.) If dust, debris, or moisture enters the refrigerant lines, oil deterioration or compressor breakdown may result.**
- **Use ester oil, ether oil, alkylbenzene oil (small amount) as the refrigeration oil applied to the flared sections. If mineral oil is mixed in the refrigeration oil, oil deterioration may result.**
- **Do not use refrigerant other than R410A refrigerant. If another refrigerant is used, the chlorine will cause the oil to deteriorate.**
- **Use the following tools specifically designed for use with R410A refrigerant. The following tools are necessary to use R410A refrigerant. Contact your nearest dealer for any questions.**

Tools (for R410A)	
Gauge manifold	Flare tool
Charge hose	Size adjustment gauge
Gas leak detector	Vacuum pump adapter
Torque wrench	Electronic refrigerant charging scale

- **Be sure to use the correct tools. If dust, debris, or moisture enters the refrigerant lines, refrigeration oil deterioration may result.**
- **Do not use a charging cylinder. If a charging cylinder is used, the composition of the refrigerant will change and the efficiency will be lowered.**

2. Installation location

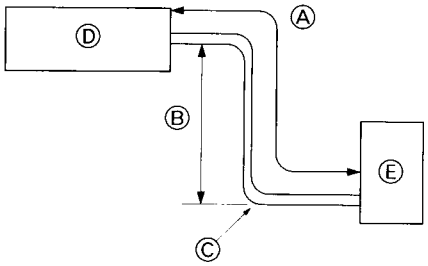

Fig. 2-1

■ RP1.6, 2

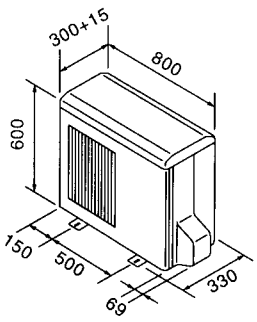

■ RP2.5-6

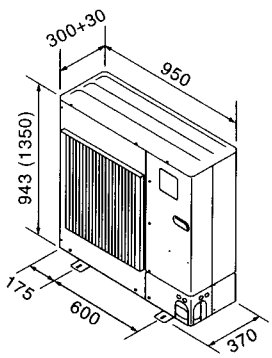

Fig. 2-2

2.1. Refrigerant pipe (Fig. 2-1)

▶ **Check that the difference between the heights of the indoor and outdoor units, the length of refrigerant pipe, and the number of bends in the pipe are within the limits shown below.**

Models	Ⓐ Pipe length (one way)	Ⓑ Height difference	Ⓒ Number of bends (one way)
RP1.6, 2, 2.5, 3	Max. 50 m	Max. 30 m	Max. of 15
RP4-6	Max. 75 m	Max. 30 m	Max. of 15

- Height difference limitations are binding regardless of which unit, indoor or outdoor, is positioned higher.
  - Ⓓ Indoor unit
  - Ⓔ Outdoor unit

2.2. Choosing the outdoor unit installation location

- Avoid locations exposed to direct sunlight or other sources of heat.
- Select a location from which noise emitted by the unit will not inconvenience neighbors.
- Select a location permitting easy wiring and pipe access to the power source and indoor unit.
- Avoid locations where combustible gases may leak, be produced, flow, or accumulate.
- Note that water may drain from the unit during operation.
- Select a level location that can bear the weight and vibration of the unit.
- Avoid locations where the unit can be covered by snow. In areas where heavy snow fall is anticipated, special precautions such as raising the installation location or installing a hood on the air intake must be taken to prevent the snow from blocking the air intake or blowing directly against it. This can reduce the airflow and a malfunction may result.
- Avoid locations exposed to oil, steam, or sulfuric gas.
- Use the transportation handles of the outdoor unit to transport the unit. If the unit is carried from the bottom, hands or fingers may be pinched.

2.3. Outline dimensions (Outdoor unit) (Fig. 2-2)

The figure in parenthesis is for RP4-6 models.

2. Installation location

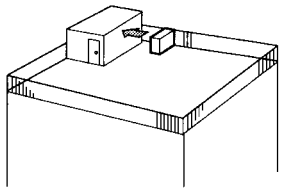

Fig. 2-3

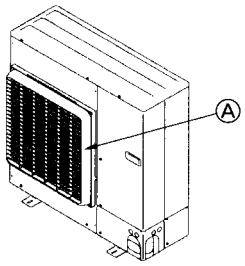

Fig. 2-4

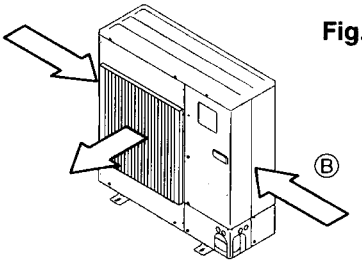

Fig. 2-5

2.4. Ventilation and service space

2.4.1. Windy location installation

When installing the outdoor unit on a rooftop or other location unprotected from the wind, situate the air outlet of the unit so that it is not directly exposed to strong winds. Strong wind entering the air outlet may impede the normal airflow and a malfunction may result.

The following shows three examples of precautions against strong winds.

① Face the air outlet towards the nearest available wall about 50 cm away from the wall. (Fig. 2-3)

② Install an optional air outlet guide and air guide if the unit is installed in a location where strong winds from a typhoon, etc. may directly enter the air outlet. (Fig. 2-4)

Ⓐ Air outlet guide

③ Position the unit so that the air outlet blows perpendicularly to the seasonal wind direction, if possible. (Fig. 2-5)

Ⓑ Wind direction

2.4.2. When installing a single outdoor unit (Refer to the A-213)

Minimum dimensions are as follows, except for Max., meaning Maximum dimensions, indicated.

The figures in parentheses are for RP4-6 models.

Refer to the figures for each case.

① Obstacles at rear only (Fig. 2-6)

② Obstacles at rear and above only (Fig. 2-7)

③ Obstacles at rear and sides only (Fig. 2-8)

* 350 for RP1.6, 2

④ Obstacles at front only (Fig. 2-9)

* When using an optional air outlet guide, the clearance for RP4-6 models is 500 mm or more.

⑤ Obstacles at front and rear only (Fig. 2-10)

* When using an optional air outlet guide, the clearance for RP4-6 models is 500 mm or more.

⑥ Obstacles at rear, sides, and above only (Fig. 2-11)

* 350 for RP1.6, 2
- Do not install the optional air outlet guides for upward airflow.

2.4.3. When installing multiple outdoor units (Refer to the last page)

Leave 350 mm for RP1.6, 2 and 10 mm for RP2.5-6 space or more between the units.

① Obstacles at rear only (Fig. 2-12)

② Obstacles at rear and above only (Fig. 2-13)

- No more than three units must be installed side by side. In addition, leave space as shown.
- Do not install the optional air outlet guides for upward airflow.

③ Obstacles at front only (Fig. 2-14)

* When using an optional air outlet guide, the clearance for RP4-6 models is 1000 mm or more.

④ Obstacles at front and rear only (Fig. 2-15)

* When using an optional air outlet guide, the clearance for RP4-6 models is 1000 mm or more.

⑤ Single parallel unit arrangement (Fig. 2-16)

* When using an optional air outlet guide installed for upward airflow, the clearance is 500 (1000) mm or more.

⑥ Multiple parallel unit arrangement (Fig. 2-17)

* When using an optional air outlet guide installed for upward airflow, the clearance is 1000 (1500) mm or more.

⑦ Stacked unit arrangement (Fig. 2-18)

- The units can be stacked up to two units high.
- No more than two stacked units must be installed side by side. In addition, leave space as shown.

3. Installing the outdoor unit

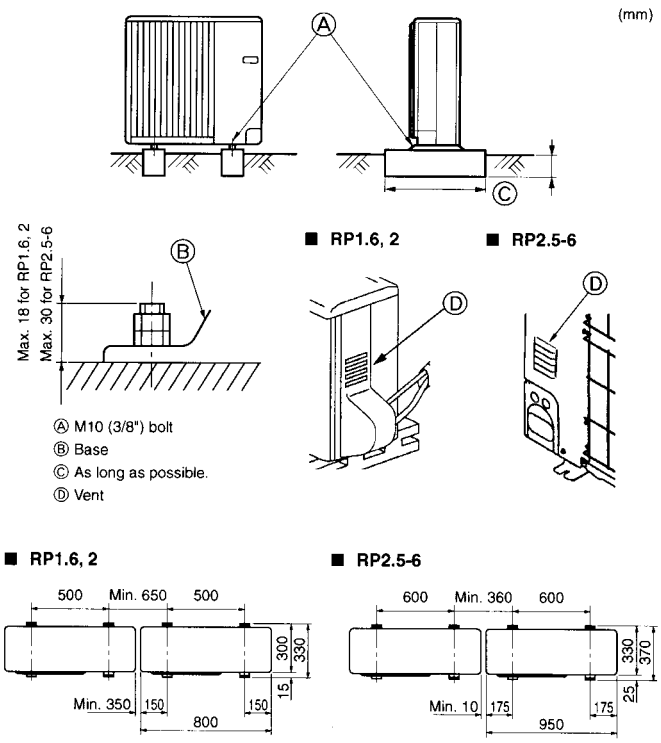

Fig. 3-1

- Be sure to install the unit in a sturdy, level surface to prevent rattling noises during operation. (Fig. 3-1)

<Foundation specifications>

Foundation bolt	M10 (3/8")
Thickness of concrete	120 mm
Length of bolt	70 mm
Weight-bearing capacity	320 kg

- Make sure that the length of the foundation bolt is within 30 mm of the bottom surface of the base.
- Secure the base of the unit firmly with four-M10 foundation bolts in sturdy locations.

Installing the outdoor unit

- Do not block the vent. If the vent is blocked, operation will be hindered and breakdown may result.
- In addition to the unit base, use the installation holes on the back of the unit to attach wires, etc., if necessary to install the unit. Use self-tapping screws (ø5 × 15 mm or more) and install on site.

⚠ Warning:

- **The unit must be securely installed on a structure that can sustain its weight. If the unit is mounted on an unstable structure, it may fall down and cause damage or injuries.**
- **The unit must be installed according to the instructions in order to minimize the risk of damage from earthquakes, typhoons, or strong winds. An incorrectly installed unit may fall down and cause damage or injuries.**

4. Installing the refrigerant piping

4.1. Precautions for devices that use R410A refrigerant

- **Refer to page 3 for precautions not included below on using air conditioners with R410A refrigerant.**
- **Use ester oil, ether oil, alkylbenzene oil (small amount) as the refrigeration oil applied to the flared sections.**
- **Use C1220 copper phosphorus, for copper and copper alloy seamless pipes, to connect the refrigerant pipes. Use refrigerant pipes with the thicknesses specified in the table to the below. Make sure the insides of the pipes are clean and do not contain any harmful contaminants such as sulfuric compounds, oxidants, debris, or dust.**

⚠ Warning:
When installing or moving the air conditioner, use only the specified refrigerant (R410A) to charge the refrigerant lines. Do not mix it with any other refrigerant and do not allow air to remain in the lines. Air enclosed in the lines can cause pressure peaks resulting in a rupture and other hazards.

	RP1.6, 2	RP2.5-6
Liquid pipe	ø6.35 thickness 0.8 mm	ø9.52 thickness 0.8 mm
Gas pipe	ø12.7 thickness 0.8 mm	ø15.88 thickness 1.0 mm

- **Do not use pipes thinner than those specified above.**

4.2. Connecting pipes (Fig. 4-1)

- When commercially available copper pipes are used, wrap liquid and gas pipes with commercially available insulation materials (heat-resistant to 100 °C or more, thickness of 12 mm or more).
- The indoor parts of the drain pipe should be wrapped with polyethylene foam insulation materials (specific gravity of 0.03, thickness of 9 mm or more).
- Apply thin layer of refrigerant oil to pipe and joint seating surface before tightening flare nut. Ⓐ
- Use two wrenches to tighten piping connections. Ⓑ
- Use leak detector or soapy water to check for gas leaks after connections are completed.
- Apply refrigerating machine oil over the entire flare seat surface. Ⓒ
- Use the flare nuts as follows. Ⓓ

		RP1.6, 2	RP2.5, 3	RP4-6
Gas side	Pipe size (mm)	ø12.7	ø15.88	ø15.88
	Indoor nut	*2	*1	*2
	Outdoor nut	*1	*1	*1
Liquid side	Pipe size (mm)	ø6.35	ø9.52	ø9.52
	Indoor nut	*2	*1	*1
	Outdoor nut	*1	*1	*1

*1: The flare nut is attached to its pipe.
*2: The flare nut is in the outdoor unit accessory.
Do not use the flare nut attached. If it is used, a gas leakage or even a pipe extraction may occur.

- When bending the pipes, be careful not to break them. Bend radii of 100 mm to 150 mm are sufficient.
- Make sure the pipes do not contact the compressor. Abnormal noise or vibration may result.

① Pipes must be connected starting from the indoor unit.
Flare nuts must be tightened with a torque wrench.
② Flare the liquid pipes and gas pipes and apply a thin layer of refrigeration oil (Applied on site).

- When usual pipe sealing is used, refer to Table 1 for flaring of R410A refrigerant pipes.
The size adjustment gauge can be used to confirm A measurements.

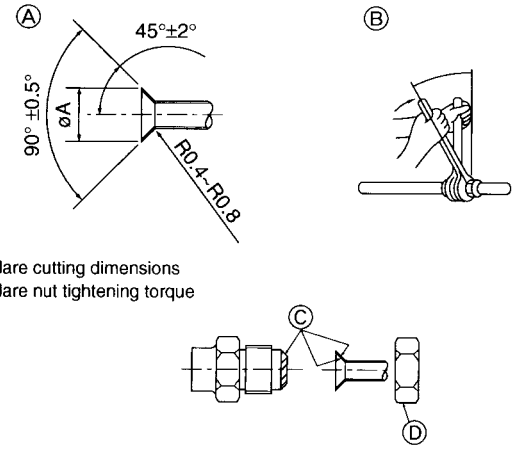

Ⓐ Flare cutting dimensions
Ⓑ Flare nut tightening torque

Fig. 4-1

Ⓐ (Fig. 4-1)

Copper pipe O.D. (mm)	Flare dimensions øA dimensions (mm)
ø6.35	8.7 - 9.1
ø9.52	12.8 - 13.2
ø12.7	16.2 - 16.6
ø15.88	19.3 - 19.7
ø19.05	23.6 - 24.0

Ⓑ (Fig. 4-1)

Copper pipe O.D. (mm)	Flare nut O.D. (mm)	Tightening torque (N·m)
ø6.35	17	14 - 18
ø6.35	22	34 - 42
ø9.52	22	34 - 42
ø12.7	26	49 - 61
ø12.7	29	68 - 82
ø15.88	29	68 - 82
ø15.88	36	100 - 120
ø19.05	36	100 - 120

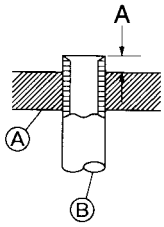

Ⓐ Die
Ⓑ Copper pipe

Fig. 4-2

Table 1 (Fig. 4-2)

Copper pipe O.D. (mm)	A (mm)	
	Flare tool for R410A	Flare tool for R22·R407C
	Clutch type	
ø6.35 (1/4")	0 - 0.5	1.0 - 1.5
ø9.52 (3/8")	0 - 0.5	1.0 - 1.5
ø12.7 (1/2")	0 - 0.5	1.0 - 1.5
ø15.88 (5/8")	0 - 0.5	1.0 - 1.5

4. Installing the refrigerant piping

■ RP1.6, 2 ■ RP2.5-6

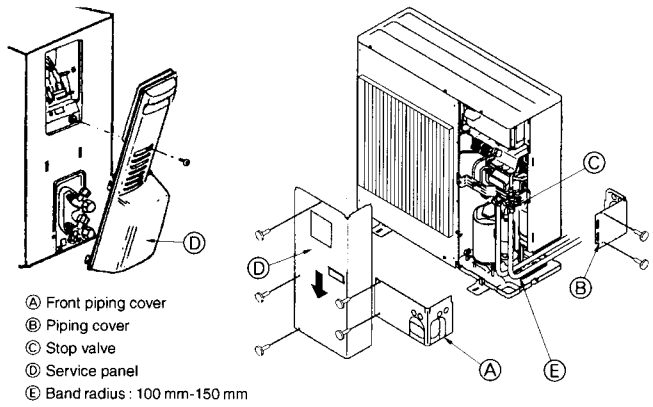

Fig. 4-3

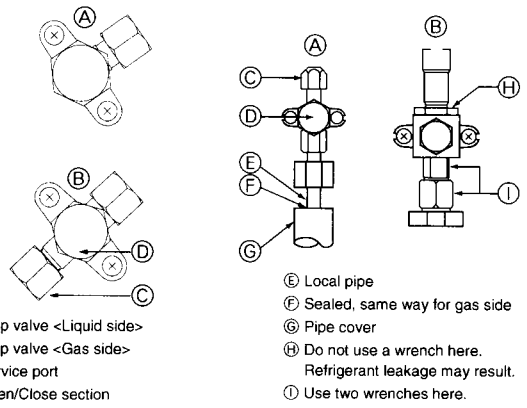

Fig. 4-4

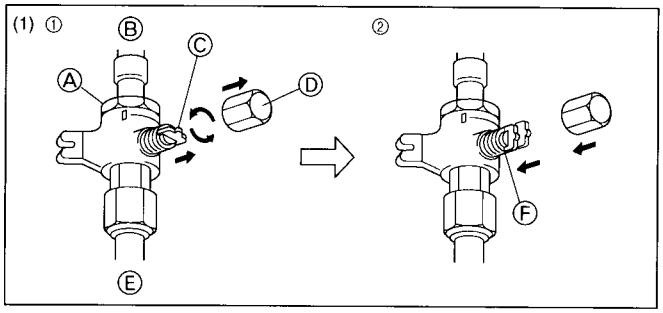

Fig. 4-5

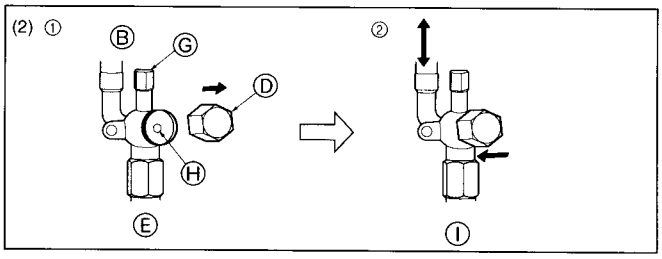

Fig. 4-6

4.3. Refrigerant piping (Fig. 4-3)

■ **For RP1.6, 2**

Remove the service panel Ⓓ (one screw).

■ **For RP2.5-6**

Remove the service panel Ⓓ (three screws) and the front piping cover Ⓐ (two screws) and rear piping cover Ⓑ (two screws).

① Perform refrigerant piping connections for the indoor/outdoor unit when the outdoor unit's stop valve is completely closed.

② Vacuum-purge air from the indoor unit and the connection piping.

③ After connecting the refrigerant pipes, check the connected pipes and the indoor unit for gas leaks. (Refer to 4.4 Refrigerant pipe airtight testing method)

④ Vacuumize the refrigerant lines through the service port of the liquid stop valve and then open the stop valves completely (for both the liquid and gas stop valves). This will completely connect the refrigerant lines of the indoor and outdoor units.
- If the stop valves are left closed and the unit is operated, the compressor and control valves will be damaged.
- Use a leak detector or soapy water to check for gas leaks at the pipe connection sections of the outdoor unit.
- Do not use the refrigerant from the unit to purge air from the refrigerant lines.
- After the valve work is completed, tighten the valve caps to the correct torque: 20 to 25 N·m (200 to 250 kgf·cm).
  Failure to replace and tighten the caps may result in refrigerant leakage. In addition, do not damage the insides of the valve caps as they act as a seal to prevent refrigerant leakage.

⑤ Use sealant to seal the ends of the thermal insulation around the pipe connection sections to prevent water from entering the thermal insulation.

4.4. Refrigerant pipe airtight testing method

(1) Connect the testing tools.
- Make sure the stop valves Ⓐ Ⓑ are closed and do not open them.
- Add pressure to the refrigerant lines through the service port Ⓒ of the liquid stop valve Ⓓ.

(2) Do not add pressure to the specified pressure all at once; add pressure little by little.
① Pressurize to 0.5 MPa (5 kgf/cm²G), wait five minutes, and make sure the pressure does not decrease.
② Pressurize to 1.5 MPa (15 kgf/cm²G), wait five minutes, and make sure the pressure does not decrease.
③ Pressurize to 4.15 MPa (41.5 kgf/cm²G) and measure the surrounding temperature and refrigerant pressure.

(3) If the specified pressure holds for about one day and does not decrease, the pipes have passed the test and there are no leaks.
- If the surrounding temperature changes by 1 °C, the pressure will change by about 0.03 MPa (0.3 kgf/cm²G). Make the necessary corrections.

(4) If the pressure decreases in steps (2) or (3), there is a gas leak. Look for the source of the gas leak.

4.5. Stop valve opening method

(1) Gas side of RP2.5-6 (Fig. 4-5)

① Remove the cap, pull the handle toward you and rotate 1/4 turn in a counterclockwise direction to open.

② Make sure that the stop valve is open completely, push in the handle and rotate the cap back to its original position.

(2) Liquid side of RP2.5-6 and Gas/Liquid side of RP1.6, 2 (Fig. 4-6)

① Remove the cap and turn the valve rod counterclockwise as far as it will go with the use of a 4 mm hexagonal wrench. Stop turning when it hits the stopper. (ø6.35: Approximately 4.5 revolutions) (ø9.52: Approximately 10 revolutions)

② Make sure that the stop valve is open completely, push in the handle and rotate the cap back to its original position.

Ⓐ Valve
Ⓑ Unit side
Ⓒ Handle
Ⓓ Cap
Ⓔ Local pipe side
Ⓕ Open position side
Ⓖ Service port
Ⓗ Wrench hole
Ⓘ Refrigerant flow direction

Refrigerant pipes are protectively wrapped for RP2.5-6
- The pipes can be protectively wrapped up to a diameter of ø90 before or after connecting the pipes. Cut out the knockout in the pipe cover following the groove and wrap the pipes.

Pipe inlet gap for RP2.5-6
- Use putty or sealant to seal the pipe inlet around the pipes so that no gaps remain. (If the gaps are not closed, noise may be emitted or water and dust will enter the unit and breakdown may result.)

4.6. Addition of refrigerant

- Additional charging is not necessary for this unit if the pipe length does not exceed 30 m.
- If the pipe length exceeds 30 m, charge the unit with additional R410A refrigerant according to the permitted pipe lengths in the chart below.
  * When the unit is stopped, charge the unit with the additional refrigerant through the liquid stop valve after the pipe extensions and indoor unit have been vacuumized.
    When the unit is operating, add refrigerant to the gas check valve using a safety charger. Do not add liquid refrigerant directly to the check valve.
  * After charging the unit with refrigerant, note the added refrigerant amount on the service label (attached to the unit).
    Refer to the "1.5. Using R410A refrigerant air conditioners" for more information.
- Be careful when installing multiple units. Connecting to an incorrect indoor unit can lead to abnormally high pressure and have a serious effect on operation performance.

Model	Permitted pipe length	Permitted vertical difference	Additional refrigerant charging amount			
			31 - 40 m	41 - 50 m	51 - 60 m	61 - 75 m
RP1.6, 2	-50 m	-30 m	0.2 kg	0.4 kg	–	–
RP2.5, 3	-50 m		0.6 kg	1.2 kg	–	–
RP4-6	-75 m		0.6 kg	1.2 kg	1.8 kg	2.4 kg

4. Installing the refrigerant piping

4.7. Precautions when reusing existing R22 refrigerant pipes

- Refer to the flowchart below to determine if the existing pipes can be used and if it is necessary to use a filter dryer.
- See below for oil condition.
  Clear to slight yellow color → Normal
  Black or brown → Pipe cleaning is necessary.
- If the diameter of the existing pipes is different from the specified diameter, refer to technological data materials to confirm if the pipes can be used.

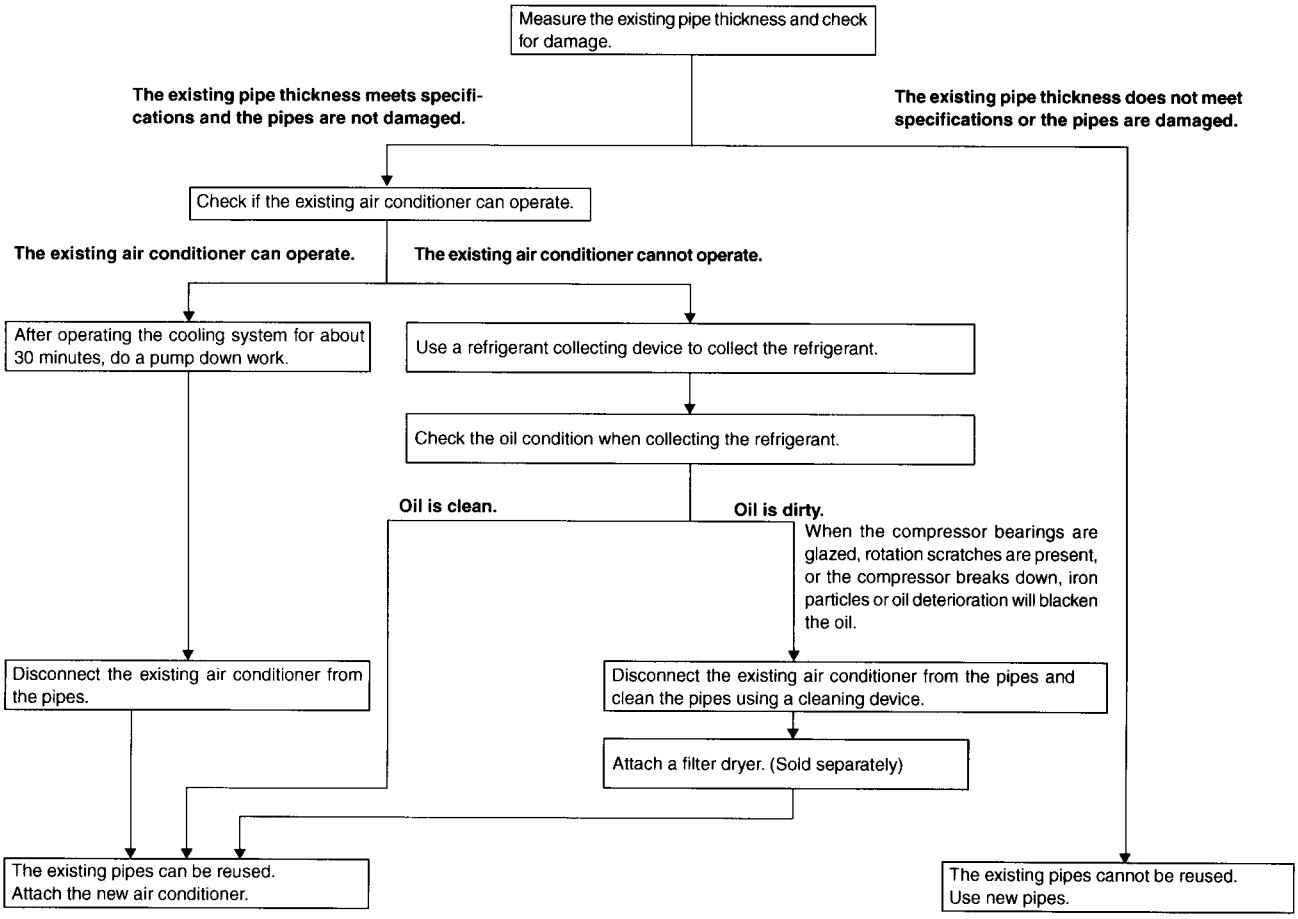

4.8. For twin/triple combination

Refrigerant piping limitation of length, height difference are shown in the figure. (Fig. 4-7)

Ⓐ Indoor unit
Ⓑ Outdoor unit
Ⓒ Multi distribution pipe (option)
Ⓓ Height difference (Indoor unit-Outdoor unit) Max. 30 m
Ⓔ Height difference (Indoor unit-Indoor unit) Max. 1 m

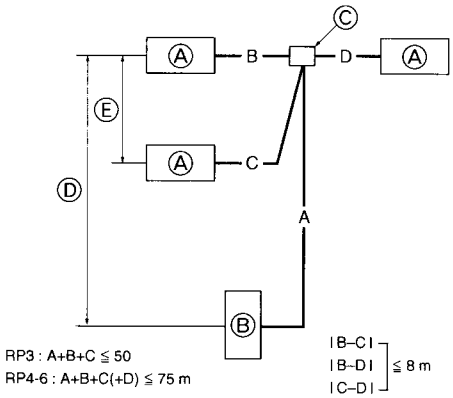

Fig. 4-7

5. Drainage piping work

Outdoor unit drainage pipe connection

When drain piping is necessary, use the drain socket or the drain pan (option).

	RP1.6, 2	RP2.5-6
Drain socket	PAC-SG61DS-E	
Drain pan	PAC-SG63DP-E	PAC-SG64DP-E

6. Electrical work

6.1. Outdoor unit (Fig. 6-1, Fig. 6-2)

① Remove the service panel.
② Wire the cables referring to the Fig. 6-1 and the Fig. 6-2.

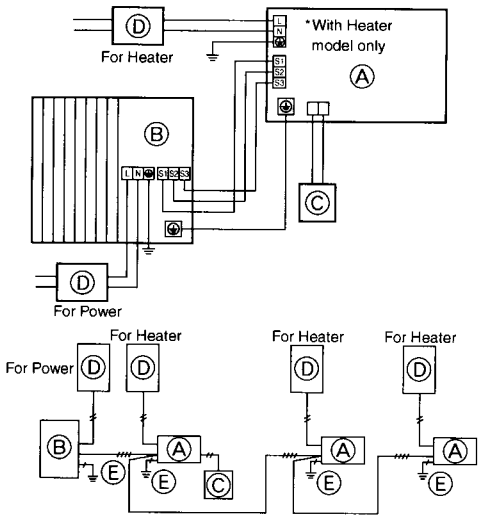

Ⓐ Indoor unit
Ⓑ Outdoor unit
Ⓒ Remote controller
Ⓓ Main switch (Breaker)
Ⓔ Earth

Fig. 6-1

■ RP1.6, 2

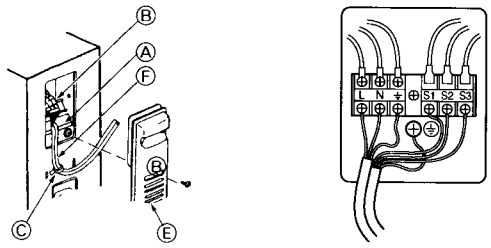

■ RP2.5-6

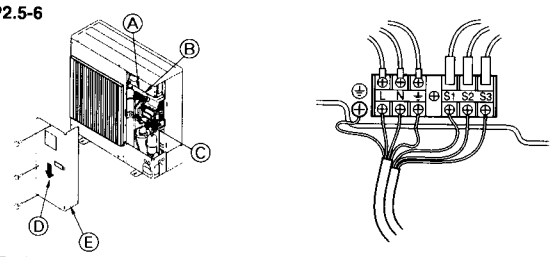

Ⓐ Earth terminal
Ⓑ Terminal block
Ⓒ Clamp
Ⓓ Service panel
Ⓔ Wire the cables so that they do not contact the center of the service panel or the gas valve.

Fig. 6-2

6.2. Field electrical wiring

Indoor unit model			RP1.6, 2V	RP2.5, 3V	RP4, 5V	RP6V
Outdoor unit power supply			~/N (single), 50Hz, 220-230-240V	~/N (single), 50Hz, 220-230-240V	~/N (single), 50Hz, 220-230-240V	~/N (single), 50Hz, 220-230-240V
Outdoor unit input capacity Main switch (Breaker)		*1	16A	25A	32A	40A
Wiring Wire No. × size (mm²)	Outdoor unit power supply		2 × Min. 1.5	2 × Min. 1.5	2 × Min. 4	2 × Min. 6
	Outdoor unit power supply earth		1 × Min. 1.5	1 × Min. 2.5	1 × Min. 4	1 × Min. 6
	Indoor unit-Outdoor unit	*2	3 × 2.5 (Polar)	3 × 2.5 (Polar)	3 × 2.5 (Polar)	3 × 2.5 (Polar)
	Indoor unit-Outdoor unit earth		1 × Min. 2.5	1 × Min. 2.5	1 × Min. 2.5	1 × Min. 2.5
	Remote controller-Indoor unit	*3	2 × 0.69 (Non-polar)	2 × 0.69 (Non-polar)	2 × 0.69 (Non-polar)	2 × 0.69 (Non-polar)
Circuit rating	Outdoor unit L-N	*4	AC 220-230-240V	AC 220-230-240V	AC 220-230-240V	AC 220-230-240V
	Indoor unit-Outdoor unit S1-S2	*4	AC 220-230-240V	AC 220-230-240V	AC 220-230-240V	AC 220-230-240V
	Indoor unit-Outdoor unit S2-S3	*4	DC24V	DC24V	DC24V	DC24V
	Remote controller-Indoor unit	*4	DC14V	DC14V	DC14V	DC14V

*1. A breaker with at least 3 mm contact separation in each pole shall be provided. Use non-fuse breaker (NF) or earth leakage breaker (NV).
*2. Max. 50m Total Max. including all indoor/ indoor connection is 80 m.
*3. A 10 m wire is attached in the remote controller accessory.
*4. The figures are NOT always against the ground.
S3 terminal has DC 24 V against S2 terminal. However between S3 and S1, these terminals are not electrically insulataed by the transformer or other device.

Notes: 1. Wiring size must comply with the applicable local and national code.
2. Power supply cords and Indoor unit/Outdoor unit connecting cords shall not be lighter than polychloroprene sheathed flexible cord. (Design 245 IEC 57)
3. Install an earth longer and thicker than other cables.

7. Test run

7.1. Before test run

▶ **After completing installation and the wiring and piping of the indoor and outdoor units, check for refrigerant leakage, looseness in the power supply or control wiring, wrong polarity, and no disconnection of one phase in the supply.**
▶ **Use a 500-volt megohmmeter to check that the resistance between the power supply terminals and ground is at least 1.0MΩ.**
▶ **Do not carry out this test on the control wiring (low voltage circuit) terminals.**
⚠ **Warning:**
Do not use the air conditioner if the insulation resistance is less than 1.0MΩ.

Insulation resistance
After installation or after the power source to the unit has been cut for an extended period, the insulation resistance will drop below 1 MΩ due to refrigerant accumulating in the compressor. This is not a malfunction. Perform the following procedures.

1. Remove the wires from the compressor and measure the insulation resistance of the compressor.
2. If the insulation resistance is below 1 MΩ, the compressor is faulty or the resistance dropped due the accumulation of refrigerant in the compressor.
3. After connecting the wires to the compressor, the compressor will start to warm up after power is supplied. After supplying power for the times indicated below, measure the insulation resistance again.
   - The insulation resistance drops due to accumulation of refrigerant in the compressor. The resistance will rise above 1 MΩ after the compressor is warmed up for two to three hours.
     (The time necessary to warm up the compressor varies according to atmospheric conditions and refrigerant accumulation.)
   - To operate the compressor with refrigerant accumulated in the compressor, the compressor must be warmed up at least 12 hours to prevent breakdown.
4. If the insulation resistance rises above 1 MΩ, the compressor is not faulty.

⚠ **Caution:**
- **The compressor will not operate unless the power supply phase connection is correct.**
- **Turn on the power at least 12 hours before starting operation.**
- Starting operation immediately after turning on the main power switch can result in severe damage to internal parts. Keep the power switch turned on during the operational season.

▶ **The followings must be checked as well.**
- The outdoor unit is not faulty. LED1 and LED2 on the control board of the outdoor unit flash when the outdoor unit is faulty.
- Both the gas and liquid stop valves are completely open.
- A protective sheet covers the surface of the DIP switch panel on the control board of the outdoor unit. Remove the protective sheet to operate the DIP switches easily.
- Make sure that the all of the SW5 DIP switches for function changes on the control board of the outdoor unit are set to OFF. If all of the SW5 switches are not set to OFF, record the settings and then set all of the switches to OFF. Begin recovering the refrigerant. After moving the unit to a new location and completing the test run, set the SW5 switches to the previously recorded settings.

7. Test run

7.2. Unit replacement operation

▶ **When reusing existing pipes that carried R22 refrigerant, replacement operation must be performed before performing a test run.**

- If new pipes are used, these procedures are not necessary.
- If existing pipes that carried R22 refrigerant are used for RP1.6-3 models, these procedures are not necessary. (The replacement operation cannot be performed.)

Replacement operation procedures

① Supply power.

② Set DIP switch SW8-2 on the control board of the outdoor unit to ON to start replacement operation.

* The replacement operation is performed using the cooling system. Cool air will flow from the indoor unit during the replacement operation.

* During the replacement operation, TEST RUN is displayed on the remote controller and LED1 and LED2 on the control board of the outdoor unit flash together.

③ Replacement operation requires at least two hours to complete.

* After setting switch SW8-2 to ON, the unit automatically stops after two hours.

* Replacement operation can be performed repeatedly by setting switch SW8-2 from OFF to ON. Wait at least two hours before starting replacement operation. (If operation is started in less than two hours, the existing pipes will not be cleaned and the unit may be damaged.)

④ Set switch SW8-2 to OFF. (Replacement operation is complete.)

* If the indoor temperature is less than 15°C, the compressor will operate intermittently but the unit is not faulty.

7.3. Test run

7.3.1. Using SW4 in outdoor unit

1) PUH Type, PUHZ Type

SW4-1	ON	Cooling operation
SW4-2	OFF	
SW4-1	ON	Heating operation
SW4-2	ON	

2) PU Type

SW4-1	ON	Cooling operation
SW4-2	ON or OFF	

* After performing the test run, set SW4-1 to OFF.

- After power is supplied, a small clicking noise may be heard from the inside of the outdoor unit. The electronic expansion valve is opening and closing. The unit is not faulty.
- A few seconds after the compressor starts, a clanging noise may be heard from the inside of the outdoor unit. The noise is coming from the check valve due to the small difference in pressure in the pipes. The unit is not faulty.

The test run operation mode cannot be changed by DIP switch SW4-2 during the test run. (To change the test run operation mode during the test run, stop the test run by DIP switch SW4-1. After changing the test run operation mode, resume the test run by switch SW4-1.)

7.3.2. Using remote controller

Refer to the indoor unit installation manual.

8. Special Functions

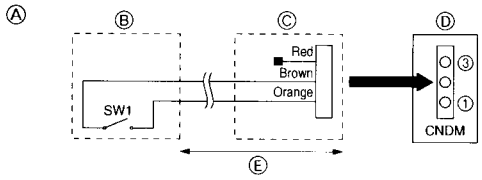

Fig. 8-1

Ⓐ Circuit diagram example (low noise mode)
Ⓑ On-site arrangement
Ⓒ External input adapter (PAC-SC36NA)
Ⓓ Outdoor unit control board
Ⓔ Max. 10 m

8.1. Low noise mode (on-site modification) (Fig. 8-1)

By performing the following modification, operation noise of the outdoor unit can be reduced by about 3-4 dB.

The low noise mode will be activated when a commercially available timer or the contact input of an ON/OFF switch is added to the CNDM connector (option) on the control board of the outdoor unit.

- The ability varies according to the outdoor temperature and conditions, etc.

① Complete the circuit as shown when using the external input adapter (PAC-SC36NA). (Option)

② DIP switch SW7-1 ON: Low noise mode
DIP switch SW7-1 OFF: Normal operation

8.2. Refrigerant collecting (pump down)

Perform the following procedures to collect the refrigerant when moving the indoor unit or the outdoor unit.

① Before collecting the refrigerant, first make sure that the all of the SW5 DIP switches for function changes on the control board of the outdoor unit are set to OFF. If all of the SW5 switches are not set to OFF, record the settings and then set all of the switches to OFF. Start collecting the refrigerant. After moving the unit to a new location and completing the test run, set the SW5 switches to the previously recorded settings.

② Supply power (circuit breaker).

* When power is supplied, make sure that "CENTRALLY CONTROLLED" is not displayed on the remote controller. If "CENTRALLY CONTROLLED" is displayed, the refrigerant collecting (pump down) cannot be completed normally.

③ After the gas stop valve is closed, set the SWP switch on the control board of the outdoor unit to ON. The compressor (outdoor unit) and ventilators (indoor and outdoor units) start operating and refrigerant collecting operation begins. LED1 and LED2 on the control board of the outdoor unit are lit.

* Only set the SWP switch (push-button type) to ON if the unit is stopped. However, even if the unit is stopped and the SWP switch is set to ON less than three minutes after the compressor stops, the refrigerant collecting operation cannot be performed. Wait until compressor has been stopped for three minutes and then set the SWP switch to ON again.

④ Because the unit automatically stops in about two to three minutes after the refrigerant collecting operation (LED1 and LED2 are lit), be sure to quickly close the gas stop valve. When LED1 and LED2 are lit and the outdoor unit is stopped, open the liquid stop valve completely, and then repeat step ③ after three minutes have passed.

* If the refrigerant collecting operation has been completed normally (LED1 and LED2 are lit), the unit will remain stopped until the power supply is turned off.

⑤ Turn off the power supply (circuit breaker).

9. System controll (Fig. 9-1)

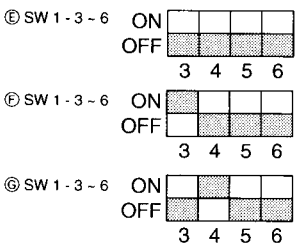

Ⓐ Outdoor unit
Ⓑ Indoor unit
Ⓒ Master remote controller
Ⓓ Subordinate remote controller
Ⓔ Standard 1:1 (Refrigerant address = 00)
Ⓕ Simultaneous twin (Refrigerant address = 01)
Ⓖ Simultaneous triple (Refrigerant address = 02)

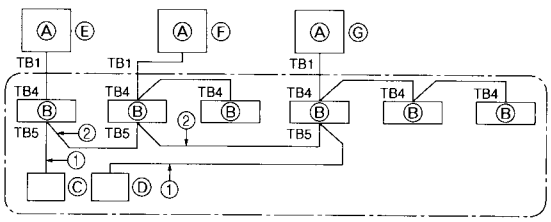

Fig. 9-1

* Set the refrigerant address using the DIP switch of the outdoor unit.

① Wiring from the Remote Control
This wire is connected to TB5 (terminal board for remote controller) of the indoor unit (non-polar).

② When a Different Refrigerant System Grouping is Used.
Up to 16 refrigerant systems can be controlled as one group using the slim MA remote controller.

Note:
In single refrigerant system (twin/triple), there is no need of wiring ②.

SW1 Function table

<SW1>

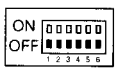

	Function	Operation according to switch setting	
		ON	OFF
SW1 function settings	1 Compulsory defrosting	Start	Normal
	2 Error history clear	Clear	Normal
	3 4 5 6 Refrigerant system address setting	Settings for outdoor unit addresses 0 to 15	

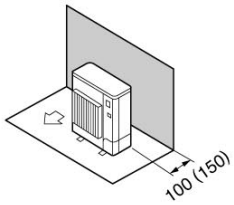

Fig. 2-6

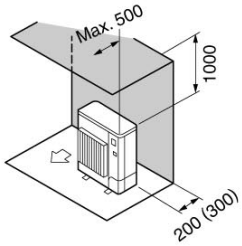

Fig. 2-7

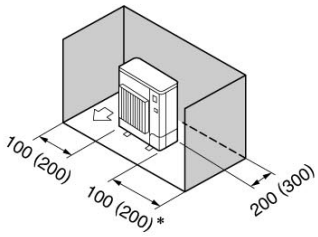

Fig. 2-8

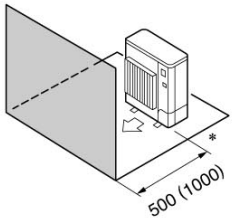

Fig. 2-9

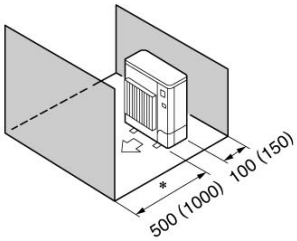

Fig. 2-10

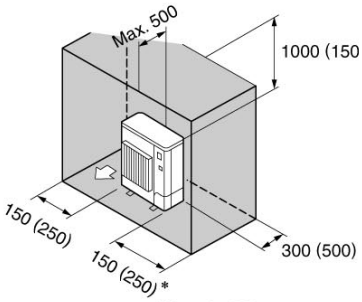

Fig. 2-11

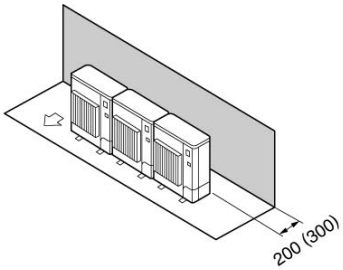

Fig. 2-12

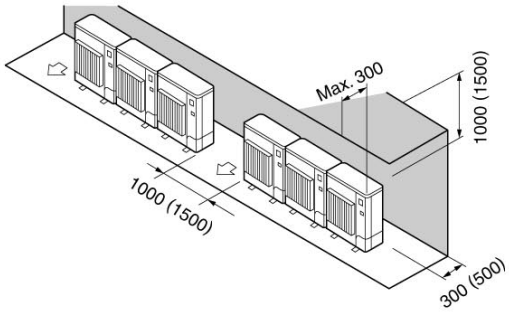

Fig. 2-13

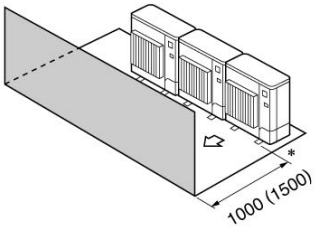

Fig. 2-14

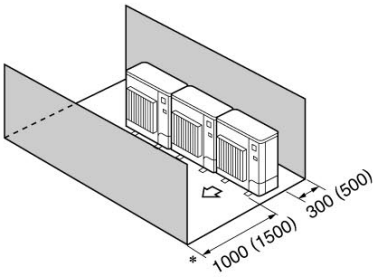

Fig. 2-15

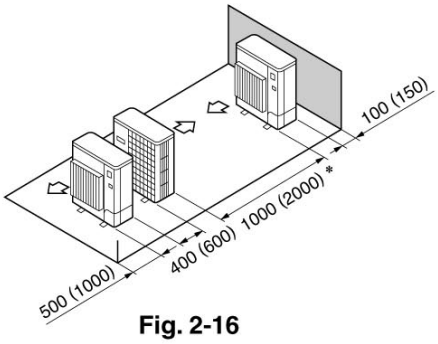

Fig. 2-16

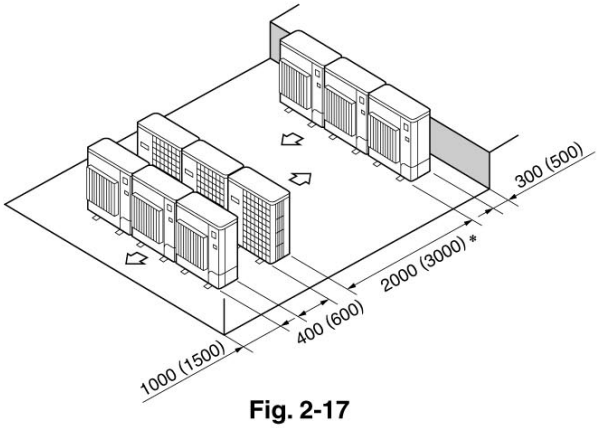

Fig. 2-17

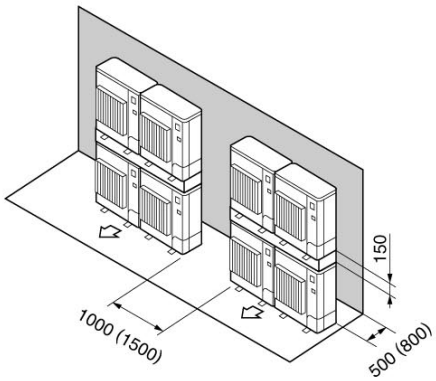

Fig. 2-18

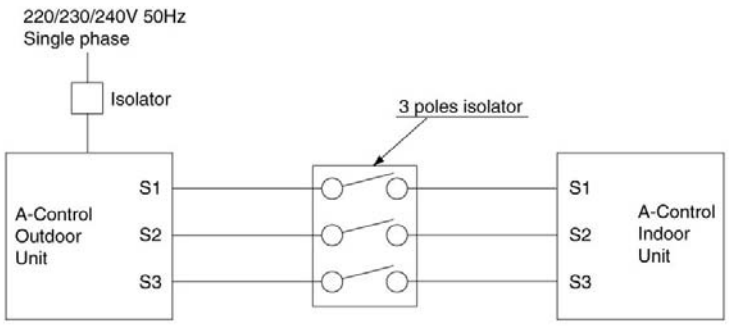

⚠ **Warning:**
In case of A-control wiring, there is high voltage potential on the S3 terminal caused by electrical circuit design that has no electrical insulation between power line and communication signal line. Therefore, please turn off the main power supply when servicing. And do not touch the S1, S2, S3 terminals when the power is energized. If isolator should be used between indoor unit and outdoor unit, please use 3-poles type.

A.5.9 CENTER OF GRAVITY POSITION

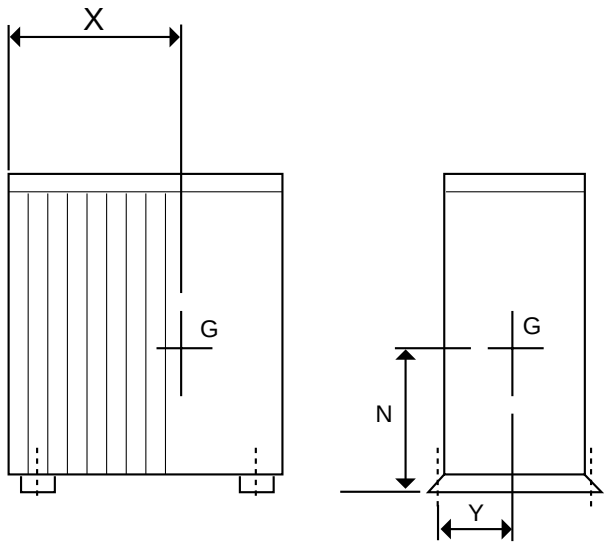

(mm)

	Center of gravity(G)		
	X	Y	Z
PUHZ-RPI.6HA PUHZ-RP 2HA	510	150	290
PUHZ-RP2.5HA PUHZ-RP3HA	580	160	400
PUHZ-RP4HA PUHZ-RP5HA PUHZ-RP6HA	590	185	500

A.5.10 SAFETY DEVICE SETTINGS

Safety device \ Model		PUHZ-RPI.6HA	PUHZ-RP2HA
Comp direct cut	U.T.C	8.0-11.5A 130℃	18.6-24.4A 130℃
	ST(at25℃)	26A,5-15sec	65A,3-10sec
	OPEN	160±5℃	170±5℃
Comp thermal relay		—	—
CT direction		—	—
High pressure switch		OFF 3.3+0.1/0.05Mpa ON 2.6±0.2Mpa	
Low pressure switch		—	
Fan motor thermal protector		OFF 135±5℃	

Safety device \ Model		PUHZ-RP2.5HA	PUHZ-RP3HA
Comp direct cut	U.T.C	21.0-31.4A 130℃	25-36A 130℃
	ST(at25℃)	74A,5-15sec	96A,3-10sec
	OPEN	160±5℃	155±5℃
Comp thermal relay		—	—
CT direction		—	—
High pressure switch		OFF 3.3+0.1/0.05Mpa ON 2.6±0.2Mpa	
Low pressure switch		—	
Fan motor thermal protector		OFF 135±5℃	

Safety device \ Model		PUHZ-RP4HA	PUHZ-RP5HA	PUHZ-RP6HA
Comp direct cut	U.T.C	28.0-41A 130℃	—	—
	ST(at25℃)	97A,3-10sec	59A,3-10sec	58A,3-10sec
	OPEN	160±5℃	120℃	130℃
Comp thermal relay		—	17A	17A
CT direction		—	15A	17A
High pressure switch		OFF 3.3+0.1/0.05Mpa ON 2.6±0.2Mpa		
Low pressure switch		—		
Fan motor thermal protector		OFF 135±5℃		

A.5.11 SYSTEM CONTOROLL

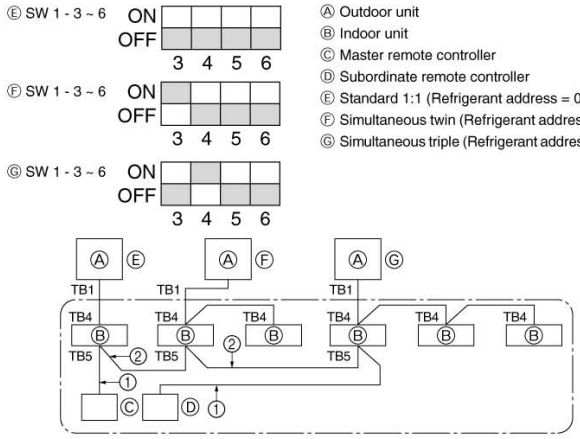

Ⓐ Outdoor unit
Ⓑ Indoor unit
Ⓒ Master remote controller
Ⓓ Subordinate remote controller
Ⓔ Standard 1:1 (Refrigerant address = 00)
Ⓕ Simultaneous twin (Refrigerant address = 01)
Ⓖ Simultaneous triple (Refrigerant address = 02)

Fig. 9-1

* Set the refrigerant address using the DIP switch of the outdoor unit.
① Wiring from the Remote Control
This wire is connected to TB5 (terminal board for remote controller) of the indoor unit (non-polar).
② When a Different Refrigerant System Grouping is Used.
Up to 16 refrigerant systems can be controlled as one group using the slim MA remote controller.

Note:
In single refrigerant system (twin/triple), there is no need of wiring ②.

SW1
Function table

<SW1>

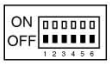

	Function	Operation according to switch setting	
		ON	OFF
SW1 function settings	1 Compulsory defrosting	Start	Normal
	2 Error history clear	Clear	Normal
	3 4 5 6 Refrigerant system address setting	Settings for outdoor unit addresses 0 to 15	