Back to Index page

C.3 MULTI SYSTEM

C.3.1 INDOOR/OUTDOOR CORRESPONDENCE TABLE C-361
C.3.2 SPECIFICATIONS C-364
C.3.2.1 Cool Only C-364
C.3.2.2 Inverter Heat Pump C-369
Indoor Units Combination C-371
C.3.3 OUTLINES AND DIMENSIONS C-382
C.3.3.1 Cool Only C-382
C.3.3.2 Inverter Heat Pump C-386
C.3.4 WIRING DIAGRAM C-389
C.3.4.1 Cool Only C-389
C.3.4.2 Inverter Heat Pump C-395
C.3.5 PEFRIGERANT SYSTEM DIAGRAM C-398
C.3.5.1 Cool Only C-398
C.3.5.2 Inverter Heat Pump C-403
C.3.5.3 Refrigerabt Pipe Length and Pipe Size C-405
C.3.6 PERFORMANCE CURVES C-412
C.3.6.1 Cool Only C-412
C.3.6.2 Inverter Heat Pump C-414
C.3.7 PERFORMANCE DATA C-425
C.3.8 NOISE CRITERIA CURVES C-445
C.3.8.1 Cool Only C-445
C.3.8.2 Inverter Heat Pump C-447
C.3.9 TROUBLESHOOTING C-448
C.3.9.1 MSC-A·WV Series C-448
C.3.9.2 MXZ Series C-449
C.3.10 INSTALLATION PROCEDURE C-453
C.3.10.1 MUX-A10WV C-453
C.3.10.2 MUX-A19/A20/A22/A25/A26WV C-455
C.3.10.3 MXZ-A18WV C-458
C.3.10.4 MXZ-A26/32WV C-461
C.3.11 MICROPROCESSOR CONTROL C-464
C.3.11.1 MU/MUH/MUX Series C-464
C.3.11.2 MXZ Series C-476

C.3.1 INDOOR/OUTDOOR CORRESPONDENCE TABLE

MUX-A10WV MUX-A22WV
MUX-A19WV MUX-A25WV
MUX-A20WV MUX-A26WV

Outdoor unit		Combination of the connectable indoor unit		
		MSC-A07WV/A07YV	MSC-A09WV/A09YV	MSC-A12WV/A12YV
MUX-A10WV	A	○	×	×
	B	○	×	×
MUX-A19WV	A	×	×	○
	B	○	×	×
MUX-A20WV	A	×	○	×
	B	×	○	×
	C	×	○	×
MUX-A22WV	A	×	×	○
	B	○	×	×
	C	○	×	×
MUX-A25WV	A	×	×	○
	B	×	×	○
MUX-A26WV	A	×	×	○
	B	×	×	○
	C	×	○	×
	D	×	○	×

MXZ-A18WV

	OUTDOOR UNIT
	MXZ-A18WV
Combination of the connectable indoor units	07+07
	07+09
	07+12
	09+09
	09+12
	12+12

❋There is no combination other than this table.

MXZ-A26WV

	OUTDOOR UNIT
	MXZ-A26WV
Combination of the connectable indoor units	07+07
	07+09
	07+12
	07+18
	07+24
	07+26
	09+09
	09+12
	09+18
	09+24
	09+26
	12+12
	12+18
	12+24
	12+26
	18+18
	18+24
	18+26
	07+07+07
	07+07+09
	07+07+12
	07+07+18
	07+07+24
	07+07+26
	07+09+09
	07+09+12
	07+09+18
	07+09+24
	07+09+26
	07+12+12
	07+12+18
	07+12+24
	07+12+26
	07+18+18
	07+18+24
	07+18+26
	09+09+09
	09+09+12
	09+09+18
	09+09+24
	09+09+26
	09+12+12
	09+12+18
	09+12+24
	09+12+26
	09+18+18
	09+18+24
	12+12+12
	12+12+18
	12+12+24
	12+12+26
	12+18+18
	12+18+24

※There is no combination other than this table.

MXZ-A32WV

	OUTDOOR UNIT
	MXZ-A32WV
Combination of the connectable indoor units	07+07
	07+09
	07+12
	07+18
	07+24
	07+26
	09+09
	09+12
	09+18
	09+24
	09+26
	12+12
	12+18
	12+24
	12+26
	18+18
	18+24
	18+26
	24+24
	24+26
	07+07+07
	07+07+09
	07+07+12
	07+07+18
	07+07+24
	07+07+26
	07+09+09
	07+09+12
	07+09+18
	07+09+24
	07+09+26
	07+12+12
	07+12+18
	07+12+24
	07+12+26
	07+18+18
	07+18+24
	07+18+26
	09+09+09
	09+09+12
	09+09+18
	09+09+24
	09+09+26
	09+12+12
	09+12+18
	09+12+24
	09+12+26
	09+18+18

	OUTDOOR UNIT
	MXZ-A32WV
Combination of the connectable indoor units	09+18+24
	12+12+12
	12+12+18
	12+12+24
	12+12+26
	12+18+18
	12+18+24
	07+07+07+07
	07+07+07+09
	07+07+07+12
	07+07+07+18
	07+07+07+24
	07+07+07+26
	07+07+09+09
	07+07+09+12
	07+07+09+18
	07+07+09+24
	07+07+09+26
	07+07+12+12
	07+07+12+18
	07+07+12+24
	07+07+18+18
	07+09+09+09
	07+09+09+12
	07+09+09+18
	07+09+09+24
	07+09+12+12
	07+09+12+18
	07+09+12+24
	07+12+12+12
	07+12+12+18
	09+09+09+09
	09+09+09+12
	09+09+09+18
	09+09+09+24
	09+09+12+12
	09+09+12+18
	09+12+12+12
	12+12+12+12

※There is no combination other than this table.

C.3.2 SPECIFICATIONS

C.3.2.1 Cool Only

Indoor model			**MSC-A07WV/YV** (Unit A,B)	**MSC-A07WV/YV** (Unit B)	**MSC-A12WV/YV** (Unit A)
Function			Cooling	Cooling	Cooling
Indoor unit power supply			Single phase 230V,50Hz	Single phase 230V,50Hz	Single phase 230V,50Hz
Capacity	Air flow (High/Med.※/Low※)	m³ /h	474/372※/276※	474/372※/276※	582/444※/324※
Electrical data	Power outlet	A	10	10	10
	Running current	A	0.17	0.17	0.19
	Power input	W	35	35	40
	Power factor	%	90	90	92
	Starting current	A	—	—	—
	Fan motor current	A	0.17	0.17	0.19
Fan motor	Model		RC4V19-LA	RC4V19-LA	RC4V19-KA
	Winding resistance(at 20℃)	Ω	WHT-BLK 413 BLK-RED 334	WHT-BLK 413 BLK-RED 334	WHT-BLK 316 BLK-RED 299
	Dimensions W×H×D	mm	815×278×217<244>	815×278×217<244>	815×278×217<244>
	Weight	kg	9	9	10
	Air direction		5	5	5
Special remarks	Sound level (High/Med.※/Low※)	dB	36/31※/25※	36/31※/25※	40/33※/26※
	Fan speed (High/Med.※/Low※)	rpm	900/750※/600※	900/750※/600※	930/760※/600※
	Fan speed regulator		3	3	3
	Thermistor RT11 (at 25℃)	kΩ	10	10	10
	Thermistor RT12 (at 25℃)	kΩ	10	10	10

Outdoor model			**MUX-A10WV**		**MUX-A19WV**		
Outdoor unit power supply			Single phase 230V,50Hz		Single phase 230V,50Hz		
Indoor unit No.			Single A or B	Double A+B	Single A	Single B	Double A+B
Capacity	Capacity	kW	2.4	1.4×2	3.5	2.4	3.5+2.4
	Dehumidification	ℓ /h	0.9	0.2×2	1.4	0.9	1.4+0.9
	Outdoor air flow	m³ /h	1,914		2,460		
Electrical data	Power outlet	A	10		20		
	Running current	A	3.20	3.25	5.73	3.51	8.96
	Power input	W	725	730	1,280	785	2,005
	Auxiliary heater	A(kW)	—		—		
	Power factor	%	98.5	97.7	97.1	97.2	97.3
	Starting current	A	21		48		
	Compressor motor current	A	2.91	2.96	5.16	2.94	8.39
	Fan motor current	A	0.29		0.57		
Coefficient of performance (C.O.P)			3.16	3.50	2.65	2.93	2.84
Compressor	Model		RN092VHSHT		MC1 : RN145VHSHT, MC2 : RN092VHSHT		
	Output	W	600		MC1 : 1,000, MC2 : 600		
	Winding resistance (at 20℃)	Ω	C-R 3.87 C-S 6.14		MC1 : C-R 2.43, C-S 3.80 , MC2 : C-R 3.87, C-S 6.14		
Fan motor	Model		RA6V33-FC		RA6V60-GA		
	Winding resistance (at 20℃)	Ω	WHT-BLK 223 BLK-RED 221		WHT-BLK 90 BLK-RED 146		
	Dimensions W×H×D	mm	780×540×255		840×640×330		
	Weight	kg	35		66		
Special remarks	Sound level	dB	49		52		
	Fan speed	rpm	825		730		
	Fan speed regulator		1		1		
	Refrigerant filling capacity (R410A)	kg	0.90 (Room A+B)		1.00 (Room A) 0.80 (Room B)		
	Refrigerating oil (Model)	cc	350 (NEO22)		MC1 : 620 (NEO22), MC2 : 350 (NEO22)		

NOTE: Test conditions are based on ISO 5151.
Cooling : Indoor DB27°C WB19°C
Outdoor DB35°C WB24°C
Indoor-Outdoor piping length 5m
※ Reference value
The value in < > is for MSC-A·YV.

Indoor model			**MSC-A09WV/YV** (Unit A,B,C)				
Function			Cooling				
Indoor unit power supply			Single phase 230V,50Hz				
Capacity	Air flow (High/Med.※/Low※)	m³ /h	474/384※/306※				
Electrical data	Power outlet	A	10				
	Running current	A	0.17				
	Power input	W	35				
	Power factor	%	90				
	Starting current	A	—				
	Fan motor current	A	0.17				
Fan motor	Model		RC4V19-LA				
	Winding resistance (at 20℃)	Ω	WHT-BLK 413 BLK-RED 334				
	Dimensions W×H×D	mm	815×278×217<244>				
	Weight	kg	9				
	Air direction		5				
Special remarks	Sound level (High/Med.※/Low※)	dB	36/31※/25※				
	Fan speed (High/Med.※/Low※)	rpm	900/770※/650※				
	Fan speed regulator		3				
	Thermistor RT11 (at 25℃)	kΩ	10				
	Thermistor RT12 (at 25℃)	kΩ	10				
Outdoor model			**MUX-A20WV**				
Outdoor unit power supply			Single phase 230V,50Hz				
Indoor unit No.			Single A	Single B or C	Double A+B or A+C	Double B+C	Triple A+B+C
Capacity	Capacity	kW	2.6	2.9	2.6+2.8	1.75×2	2.5+1.75×2
	Dehumidification	ℓ /h	0.9	1.2	0.9+1.1	0.3×2	0.8+0.3×2
	Outdoor air flow	m³ /h	2,460				
Electrical data	Power outlet	A	20				
	Running current	A	3.64	4.86	8.18	4.86	8.41
	Power input	W	815	1,075	1,850	1,090	1,885
	Auxiliary heater	A(kW)	—				
	Power factor	%	97.3	96.2	98.3	97.5	97.5
	Starting current	A	47				
	Compressor motor current	A	3.07	4.29	7.61	4.29	7.84
	Fan motor current	A	0.57				
Coefficient of performance (C.O.P)			3.06	2.61	2.81	3.02	3.02
Compressor	Model		MC1 : RN099VHSHT, MC2 : RN125VHSHT				
	Output	W	MC1 : 650, MC2 : 800				
	Winding resistance (at 20℃)	Ω	MC1 : C-R 3.40 C-S 4.56 , MC2 : C-R 2.86 C-S 5.72				
Fan motor	Model		RA6V60-GA				
	Winding resistance (at 20℃)	Ω	WHT-BLK 90 BLK-RED 146				
	Dimensions W×H×D	mm	840×640×330				
	Weight	kg	65				
Special remarks	Sound level	dB	52				
	Fan speed	rpm	730				
	Fan speed regulator		1				
	Refrigerant filling capacity (R410A)	kg	0.80 (Room A) 1.00 (Room B+C)				
	Refrigerating oil (Model)	cc	MC1 : 350 (NEO22), MC2 : 350 (NEO22)				

NOTE: Test conditions are based on ISO 5151.
Cooling : Indoor DB27°C WB19°C
Outdoor DB35°C WB24°C
Indoor-Outdoor piping length 5m
※ Reference value
The value in < > is for MSC-A·YV.

Indoor model			**MSC-A07WV/YV** (Unit B)	**MSC-A07WV/YV** (Unit C)	**MSC-A12WV/YV** (Unit A)
Function			Cooling	Cooling	Cooling
Indoor unit power supply			Single phase 230V,50Hz	Single phase 230V,50Hz	Single phase 230V,50Hz
Capacity	Air flow (High/Med.※/Low※)	m³ /h	474/372※/276※	474/372※/276※	582/444※/324※
Electrical data	Power outlet	A	10	10	10
	Running current	A	0.17	0.17	0.19
	Power input	W	35	35	40
	Power factor	%	90	90	92
	Starting current	A	—	—	—
	Fan motor current	A	0.17	0.17	0.19
Fan motor	Model		RC4V19-LA	RC4V19-LA	RC4V19-KA
	Winding resistance(at 20℃)	Ω	WHT-BLK 413 BLK-RED 334	WHT-BLK 413 BLK-RED 334	WHT-BLK 316 BLK-RED 299
Dimensions W×H×D		mm	815×278×217<244>	815×278×217<244>	815×278×217<244>
Weight		kg	9	9	10
Air direction			5	5	5
Special remarks	Sound level (High/Med.※/Low※)	dB	36/31※/25※	36/31※/25※	40/33※/26※
	Fan speed (High/Med.※/Low※)	rpm	900/750※/600※	900/750※/600※	930/760※/600※
	Fan speed regulator		3	3	3
	Thermistor RT11 (at 25℃)	kΩ	10	10	10
	Thermistor RT12 (at 25℃)	kΩ	10	10	10

Outdoor model			**MUX-A22WV**				
Function			Cooling				
Outdoor unit power supply			Single phase 230V,50Hz				
Indoor unit No.			Single A	Single B or C	Double A+B or A+C	Double B+C	Triple A+B+C
Capacity	Capacity	kW	3.5	2.4	3.5+2.4	1.45×2	3.4+1.45×2
	Dehumidification	ℓ /h	1.4	0.9	1.4+0.9	0.4	1.4+0.4
	Outdoor air flow	m³ /h	2,460				
Electrical data	Power outlet	A	20				
	Running current	A	5.73	3.64	8.92	3.69	8.84
	Power input	W	1,280	815	1,975	830	1,980
	Auxiliary heater	A(kW)	—				
	Power factor	%	97.1	97.3	96.3	97.8	97.4
	Starting current	A	48				
	Compressor motor current	A	5.02	2.99	8.01	2.99	8.01
	Fan motor current	A	0.57				
Coefficient of performance (C.O.P)			2.65	2.82	2.88	3.22	3.01
Compressor	Model		MC1 : RN145VHSHT, MC2 : RN092VHSHT				
	Output	W	MC1 : 1,000, MC2 : 600				
	Winding resistance (at 20℃)	Ω	MC1 : C-R 2.43 C-S 3.80, MC2 : C-R 3.87 C-S 0.14				
Fan motor	Model		RA6V60-GA				
	Winding resistance (at 20℃)	Ω	WHT-BLK 90 BLK-RED 146				
Dimensions W×H×D		mm	840×640×330				
Weight		kg	67				
Special remarks	Sound level	dB	52				
	Fan speed	rpm	730				
	Fan speed regulator		1				
	Refrigerant filling capacity (R410A)	kg	0.85 (Room A) 0.85 (Room B+C)				
	Refrigerating oil (Model)	cc	MC1 : 620 (NEO22), MC2 : 350 (NEO22)				

NOTE: Test conditions are based on ISO 5151.
Cooling : Indoor DB27°C WB19°C
Outdoor DB35°C WB24°C
Indoor-Outdoor piping length 5m
※ Reference value
The value in < > is for MSC-A·YV.

Indoor model			**MSC-A12WV/YV** (Unit A ,B)	
Function			Cooling	
Indoor unit power supply			Single phase 230V,50Hz	
Capacity	Air flow (High/Med.※/Low)	m³ /h	582/444※/324※	
Electrical data	Power outlet	A	10	
	Running current	A	0.19	
	Power input	W	40	
	Power factor	%	92	
	Starting current	A	—	
	Fan motor current	A	0.19	
Fan motor	Model		RC4V19-KA	
	Winding resistance(at20℃)	Ω	WHT-BLK 316 BLK-RED 299	
	Dimensions W×H×D	mm	815×278×217<244>	
	Weight	kg	10	
	Air direction		5	
Special remarks	Sound level (High/Med.※/Low※)	dB	40/33※/26※	
	Fan speed (High/Med.※/Low※)	rpm	930/760※/600※	
	Fan speed regulator		3	
	Thermistor RT11 (at 25℃)	kΩ	10	
	Thermistor RT12 (at 25℃)	kΩ	10	
Outdoor model			**MUX-A25WV**	
Outdoor unit power supply			Single phase 230V,50Hz	
Indoor unit No.			Single A or B	Double A+B
Capacity	Capacity	kW	3.5	3.5×2
	Dehumidification	ℓ /h	1.4	1.4×2
	Outdoor air flow	m³ /h	2,460	
Electrical data	Power outlet	A	20	
	Running current	A	5.88	11.49
	Power input	W	1,300	2,540
	Auxiliary heater	A(kW)	—	
	Power factor	%	96.1	96.1
	Starting current	A	54	
	Compressor motor current	A	5.31	10.92
	Fan motor current	A	0.57	
Coefficient of performance (C.O.P)			2.61	2.67
Compressor	Model		MC1 : RN145VHSHT, MC2 : RN145VHSHT	
	Output	W	MC1 : 1,000, MC2 : 1,000	
	Winding resistance (at 20℃)	Ω	MC1 : C-R 2.43 C-S 3.80 , MC2 : C-R 2.43 C-S 3.80	
Fan motor	Model		RA6V60-GA	
	Winding resistance (at 20℃)	Ω	WHT-BLK 90 BLK-RED 146	
	Dimensions W×H×D	mm	840×640×330	
	Weight	kg	68	
Special remarks	Sound level	dB	52	
	Fan speed	rpm	730	
	Fan speed regulator		1	
	Refrigerant filling capacity (R410A)	kg	0.95 (Room A) 0.95 (Room B)	
	Refrigerating oil (Model)	cc	MC1 : 620 (NEO22), MC2 : 620 (NEO22)	

NOTE: Test conditions are based on ISO 5151.
Cooling : Indoor DB27°C WB19°C
Outdoor DB35°C WB24°C
Indoor-Outdoor piping length 5m
※ Reference value
The value in < > is for MSC-A·YV.

Indoor model			**MSC-A09WV/YV** (Unit C ,D)	**MSC-A12WV/YV** (Unit A ,B)
Function			Cooling	Cooling
Indoor unit power supply			Single phase 230V,50Hz	Single phase 230V,50Hz
Capacity	Air flow (High/Med.※/Low※)	m³ /h	474/384※/306※	582/444※/324※
Electrical data	Power outlet	A	10	10
	Running current	A	0.17	0.19
	Power input	W	35	40
	Power factor	%	90	92
	Starting current	A	—	—
	Fan motor current	A	0.17	0.19
Fan motor	Model		RC4V19-LA	RC4V19-KA
	Winding resistance (at 20℃)	Ω	WHT-BLK 413 BLK-RED 334	WHT-BLK 316 BLK-RED 299
	Dimensions W×H×D	mm	815×278×217<244>	815×278×217<244>
	Weight	kg	9	10
	Air direction		5	5
Special remarks	Sound level (High/Med.※/Low※)	dB	36/31※/25※	40/33※/26※
	Fan speed (High/Med.※/Low※)	rpm	900/770※/650※	930/760※/600※
	Fan speed regulator		3	3
	Thermistor RT11 (at 25℃)	kΩ	10	10
	Thermistor RT12 (at 25℃)	kΩ	10	10

Outdoor model			**MUX-A26WV**							
Outdoor unit power supply			Single phase 230V,50Hz							
Indoor unit No.			Single A or B	Single C or D	Double A+B	Double A+C or A+D or B+C or B+D	Double C+D	Triple A+B+C or A+B+D	Triple A+C+D or B+C+D	Four A+B+C+D
Capacity	Capacity	kW	3.4	2.75	1.95×2	3.4+2.7	1.7×2	1.95×2+2.8	3.4+1.7×2	1.95×2+1.7×2
	Dehumidification	ℓ /h	1.2	1.1	0.2×2	1.2+1.1	0.3×2	0.2×2+1.1	1.2+0.3×2	0.2×2+0.3×2
	Outdoor air flow	m³ /h	2,760							
Electrical data	Power outlet	A	20							
	Running current	A	5.28	4.54	5.46	9.57	4.78	9.61	9.66	9.75
	Power input	W	1,180	1,015	1,210	2,095	1,060	2,105	2,140	2,210
	Auxiliary heater	A(kW)	—							
	Power factor	%	97.2	97.2	96.4	95.2	96.4	95.2	96.3	98.6
	Starting current	A	52							
	Compressor motor current	A	4.75	4.01	4.93	9.04	4.25	9.08	9.13	9.22
	Fan motor current	A	0.53							
Coefficient of performance (C.O.P)			2.79	2.62	3.02	2.81	3.01	3.02	3.02	3.09
Compressor	Model		MC1 : RN145VHSHT, MC2 : RN125VHSHT							
	Output	W	MC1 : 1,000, MC2 : 800							
	Winding resistance (at 20℃)	Ω	MC1 : C-R 2.43 C-S 3.80 , MC2 : C-R 2.86 C-S 5.72							
Fan motor	Model		RA6V60-FA							
	Winding resistance (at 20℃)	Ω	WHT-BLK 79 BLK-RED 80							
	Dimensions W×H×D	mm	840×850×330							
	Weight	kg	76							
Special remarks	Sound level	dB	52							
	Fan speed	rpm	730							
	Fan speed regulator		1							
	Refrigerant filling capacity (R410A)	kg	1.05 (Room A+B) 1.05 (Room C+D)							
	Refrigerating oil (Model)	cc	MC1 : 620 (NEO22), MC2 : 350 (NEO22)							

NOTE: Test conditions are based on ISO 5151.
Cooling : Indoor DB27°C WB19°C
Outdoor DB35°C WB24°C
Indoor-Outdoor piping length 5m
※ Reference value
The value in < > is for MSC-A·YV.

C.3.2.2 Inverter Heat Pump

	Outdoor model		**MXZ-A18WV**	
	Outdoor unit power supply		Single phase 230V,50Hz	
System	Indoor units number		2	
	Indoor units total capacity (Connectable) ✻2		Total capacity 24	
	indoor units total capacity (Simultaneous operation) ✻2		Total capacity 24	
	Piping total length	m	Max. 30 (chargeless 20)	
	Connecting pipe length	m	Max. 20	
	Height difference (Indoor ~ Outdoor)	m	10	
	Height difference (Indoor ~ Indoor)	m	10	
	Function		Cooling	Heating
Capacity	Capacity [Rated (Min~Max.) Hz]✻4	kW	5.4 (1.55~6.0)	6.6 (1.58~7.2)
	Dehumidification	ℓ /h	—	—
	Outdoor air flow	m³ /h	2,460	
Electrical data	Power outlet	A	20	
	Running current ✻4	A	8.98	8.55
	Power input	W	1,860 (370~2,130)	1,770 (290~1,850)
	Auxiliary heater	A(kW)	—	
	Crankcase heater	W	—	
	Power factor ✻4	%	90.0	
	Starting current ✻4	A	8.98	
	Compressor motor current	A	8.41	7.98
	Fan motor current	A	0.57	
	Coefficient of performance (C.O.P)		2.90	3.73
Compressor	Model		SNV-092FJYH (ROTARY)	
	Output	W	1,450	
	Winding resistance (at 20℃)	Ω	U-V 2.56 V-W 2.56 W-U 2.56	
Fan motor	Model		RA6V49-AA	
	Winding resistance (at 20℃)	Ω	WHT-BLK 139.9 BLK-YLW 34.2 BLK-RED 205.3	
	Dimensions W×H×D	mm	840(+69)×640×330	
	Weight	kg	52	
Special remarks	Sound level (High/Low※) ✻3	dB	49/44※	50/45※
	Fan speed (High/Low※) ✻3	rpm	725/620※	
	Fan speed regulator ✻3		2	
	Refrigerant filling capacity (R410A)	kg	1.75	
	Refrigerating oil (Model)	cc	450 (NEO22)	
	Thermistor RT61	kΩ	13.4 (at 100℃)	
	Thermistor RT62	kΩ	10.0 (at 25℃)	
	Thermistor RT63	kΩ	10.0 (at 25℃)	
	Thermistor RT6A,6B	kΩ	10.0 (at 25℃)	
	Thermistor RT65	kΩ	17.0 (at 50℃)	
	Thermistor RT68	kΩ	10.0 (at 25℃)	

NOTE: Test conditions are based on ISO 5151 (Refrigerant piping length (one way) :5m
※ Reference value
✻1 Electrical data is for only outdoor unit.
✻2 However, please refer to “INDOOR/OUTDOOR CORRESPONDENCE TABLE” of page C-361 for the combination.
✻3 These specifications are when all indoor units are operating.
✻4 Measured under rated operating frequency.

TEST CONDITIONS COOLING INDOOR DB27.0°C WB19.0°C
OUTDOOR DB35.0°C WB24.0°C
HEATING INDOOR DB20.0°C
OUTDOOR DB 7.0°C WB 6.0°C

	Outdoor model		MXZ-A26WV		MXZ-A32WV	
	Outdoor unit power supply		Single phase 230V,50Hz		Single phase 230V,50Hz	
System	Indoor units number		2 to 3		2 to 4	
System	Indoor units total capacity (Connectable)✻2		Total capacity 54		Total capacity 54	
System	Indoor units total capacity (Simultaneous operation) ✻2		Total capacity 54		Total capacity 54	
System	Piping total length	m	Max. 50		Max. 70	
System	Connecting pipe length	m	Max. 25		Max. 25	
System	Height difference (Indoor ~ Outdoor)	m	10		10	
System	Height difference (Indoor ~ Indoor)	m	10		10	
	Function		Cooling	Heating	Cooling	Heating
Capacity	Capacity [Rated (Min~Max.) Hz]✻4	kW	7.2 (2.9~8.5)	9.0 (2.6~11.0)	8.0 (3.7~9.2)	9.4 (3.4~11.6)
Capacity	Dehumidification	ℓ /h	—	—	—	—
Capacity	Outdoor air flow	m³ /h	2,530	2,630	2,530	2,630
Electrical data	Power outlet	A	25		25	
Electrical data	Running current ✻4	A	9.18	9.44	9.62	8.48
Electrical data	Power input	W	2,090 (720~2,560)	2,150 (530~3,050)	2,190 (810~2,580)	1,930 (590~3,230)
Electrical data	Auxiliary heater	A(kW)	—		—	
Electrical data	Crankcase heater	W	—		—	
Electrical data	Power factor ✻4	%	99.0		99.0	
Electrical data	Starting current ✻4	A	9.44		9.62	
Electrical data	Compressor motor current	A	8.98	9.24	9.42	8.28
Electrical data	Fan motor current	A	0.2		0.2	
	Coefficient of performance(C.O.P)		3.44	4.19	3.65	4.87
Compressor	Model		TNB220FMCH (ROTARY)		TNB220FMCH (ROTARY)	
Compressor	Output	W	2,000		2,100	
Compressor	Winding resistance(at20℃)	Ω	U-V 1.41 V-W 1.41 W-U 1.41		U-V 1.41 V-W 1.41 W-U 1.41	
Fan motor	Model		PM8H60-UA		PM8H60-UA	
Fan motor	Winding resistance(at20℃)	Ω	BLK-WHT 15.2 WHT-RED 15.2 RED-BLK 15.2		BLK-WHT 15.2 WHT-RED 15.2 RED-BLK 15.2	
	Dimensions W×H×D	mm	900×900×320 (+35)		900×900×320 (+35)	
	Weight	kg	69		70	
Special remarks	Sound level (High/Low※) ✻3	dB	46/44※	48/46※	46/44※	48/46※
Special remarks	Fan speed (High/Low※) ✻3	rpm	550/490※	560/490※	550/490※	560/490※
Special remarks	Fan speed regulator ✻3		2		2	
Special remarks	Refrigerant filling capacity(R410A)	kg	3.5		3.5	
Special remarks	Refrigerating oil (Model)	cc	870 (NEO22)		870 (NEO22)	
Special remarks	Thermistor RT61	kΩ	13.4 (at 100℃)		13.4 (at 100℃)	
Special remarks	Thermistor RT62	kΩ	10.0 (at 25℃)		10.0 (at 25℃)	
Special remarks	Thermistor RT63	kΩ	10.0 (at 25℃)		10.0 (at 25℃)	
Special remarks	Thermistor RT68	kΩ	10.0 (at 25℃)		10.0 (at 25℃)	
Special remarks	Thermistor RT6A	kΩ	10.0 (at 25℃)		10.0 (at 25℃)	
Special remarks	Thermistor RT6B	kΩ	10.0 (at 25℃)		10.0 (at 25℃)	
Special remarks	Thermistor RT6C	kΩ	10.0 (at 25℃)		10.0 (at 25℃)	
Special remarks	Thermistor RT6D	kΩ	10.0 (at 25℃)		10.0 (at 25℃)	
Special remarks	Thermistor RT65	kΩ	17.0 (at 50℃)		17.0 (at 50℃)	

NOTE: Test conditions are based on ISO5151 (Refrigerant piping length (one way): 5m)

※ Reference value

✻1 Electrical data is for only outdoor unit.

✻2 However, please refer to “INDOOR/OUTDOOR CORRESPONDENCE TABLE” of page C-362 or C-363 for the combination.

✻3 These specifications are when all indoor units are operating.

✻4 Measured under rated operating frequency.

TEST CONDITIONS COOLING INDOOR DB27.0°C WB19.0°C
OUTDOOR DB35.0°C WB24.0°C
HEATING INDOOR DB20.0°C
OUTDOOR DB 7.0°C WB 6.0°C

[INDOOR UNITS COMBINATION]

MXZ-A18WV

NOTE: Electrical data is for outdoor unit only.

Indoor units combination	Cooling capacity (kW)			Outdoor unit power consumption (kW)	Current (A)	Power factor (%)
	Unit A	Unit B	Total		230V	
07	2.3	–	2.3 (0.9-2.95)	0.750 (0.225-1.000)	3.62	90
09	2.5	–	2.5 (0.9-3.30)	0.810 (0.225-1.070)	3.91	90
12	3.4	–	3.4 (0.9-4.00)	1.180 (0.220-1.450)	5.70	90
07+07	2.3	2.3	4.6 (1.49-5.30)	1.480 (0.370-2.060)	7.15	90
07+09	2.3	2.5	4.8 (1.49-5.40)	1.600 (0.370-2.070)	7.73	90
07+12	2.02	2.98	5.0 (1.51-5.60)	1.610 (0.365-2.100)	7.78	90
09+09	2.5	2.5	5.0 (1.51-5.55)	1.780 (0.370-2.105)	8.60	90
09+12	2.2	3.1	5.3 (1.53-5.80)	1.830 (0.365-2.110)	8.84	90
12+12	2.65	2.65	5.4 (1.55-6.00)	1.860 (0.370-2.130)	8.99	90

NOTE: Electrical data is for outdoor unit only.

Indoor units combination	Heating capacity (kW)			Outdoor unit power consumption (kW)	Current (A)	Power factor (%)
	Unit A	Unit B	Total		230V	
07	3.3	–	3.3 (0.9-4.0)	0.980 (0.225-1.115)	4.73	90
09	3.6	–	3.6 (0.9-4.5)	1.065 (0.225-1.195)	5.14	90
12	4.0	–	4.0 (0.9-4.8)	1.400 (0.220-1.680)	6.76	90
07+07	3.05	3.05	6.1 (1.53-6.70)	1.930 (0.300-2.070)	9.32	90
07+09	2.97	3.23	6.2 (1.53-6.80)	1.940 (0.300-2.040)	9.37	90
07+12	2.62	3.88	6.5 (1.55-7.00)	1.870 (0.295-1.980)	9.03	90
09+09	3.25	3.25	6.5 (1.55-7.0)	1.920 (0.295-2.010)	9.28	90
09+12	2.78	3.77	6.55 (1.56-7.1)	1.845 (0.295-1.950)	8.91	90
12+12	3.30	3.30	6.6 (1.58-7.2)	1.770 (0.290-1.850)	8.55	90

MXZ-A26WV

NOTE: Electrical data is for outdoor unit only.

Indoor units combination	Cooling capacity (kW)				Outdoor unit power consumption (kW)	Current (A)	Power factor (%)
	Unit A	Unit B	Unit C	Total			
07	2.3	–	–	2.3 (1.4-3.0)	0.710 (0.400-0.920)	3.12	99
09	2.5	–	–	2.5 (1.4-3.3)	0.760 (0.400-1.010)	3.34	99
12	3.4	–	–	3.4 (1.5-4.3)	1.000 (0.400-1.290)	4.39	99
18	5.0	–	–	5.0 (1.6-5.6)	1.440 (0.420-1.630)	6.32	99
24	6.0	–	–	6.0 (1.6-6.6)	1.930 (0.400-2.130)	8.48	99
26	7.1	–	–	7.1 (1.7-7.4)	2.580 (0.410-2.710)	11.33	99
07+07	2.3	2.3	–	4.6 (2.0-5.4)	1.180 (0.600-1.600)	5.18	99
07+09	2.1	2.7	–	4.8 (2.0-5.8)	1.300 (0.600-1.770)	5.71	99
07+12	2.1	3.6	–	5.7 (2.0-6.6)	1.710 (0.600-2.200)	7.51	99
07+18	2.01	5.18	–	7.2 (2.0-7.7)	2.400 (0.560-2.710)	10.54	99
07+24	1.62	5.57	–	7.2 (2.0-8.0)	2.360 (0.560-3.050)	10.36	99
07+26	1.52	5.67	–	7.2 (2.0-8.2)	2.360 (0.560-3.200)	10.36	99
09+09	2.5	2.5	–	5.0 (2.0-6.2)	1.360 (0.580-1.950)	5.97	99
09+12	2.52	3.37	–	5.9 (2.0-7.3)	1.860 (0.580-2.670)	8.17	99
09+18	2.4	4.8	–	7.2 (2.0-8.5)	2.400 (0.560-3.200)	10.54	99
09+24	1.96	5.23	–	7.2 (2.0-8.5)	2.360 (0.560-3.170)	10.36	99
09+26	1.85	5.34	–	7.2 (2.0-8.5)	2.360 (0.560-3.170)	10.36	99
12+12	3.4	3.4	–	6.8 (2.0-8.5)	2.330 (0.580-3.260)	10.23	99
12+18	2.88	4.32	–	7.2 (2.0-8.5)	2.390 (0.560-3.210)	10.50	99
12+24	2.4	4.8	–	7.2 (2.0-8.5)	2.350 (0.560-3.180)	10.32	99
12+26	2.27	4.92	–	7.2 (2.0-8.5)	2.350 (0.560-3.180)	10.32	99
18+18	3.6	3.6	–	7.2 (2.1-8.5)	2.340 (0.590-3.160)	10.28	99
18+24	3.08	4.11	–	7.2 (2.1-8.5)	2.300 (0.570-3.110)	10.10	99
18+26	2.94	4.25	–	7.2 (2.1-8.5)	2.300 (0.570-3.110)	10.10	99
07+07+07	2.3	2.3	2.3	6.9 (2.9-8.1)	1.940 (0.690-2.410)	8.52	99
07+07+09	2.16	2.16	2.77	7.1 (2.9-8.5)	2.030 (0.690-2.510)	8.92	99
07+07+12	1.93	1.93	3.32	7.2 (2.9-8.5)	2.310 (0.690-2.620)	10.14	99
07+07+18	1.58	1.58	4.05	7.2 (2.9-8.5)	2.320 (0.700-2.570)	10.19	99
07+07+24	1.32	1.32	4.55	7.2 (2.9-8.5)	2.370 (0.680-2.530)	10.41	99
07+07+26	1.26	1.26	4.68	7.2 (2.9-8.5)	2.390 (0.680-2.530)	10.50	99
07+09+09	2.01	2.59	2.59	7.2 (2.9-8.5)	2.130 (0.690-2.620)	9.35	99
07+09+12	1.8	2.31	3.09	7.2 (2.9-8.5)	2.350 (0.690-2.620)	10.32	99
07+09+18	1.48	1.9	3.81	7.2 (2.9-8.5)	2.370 (0.700-2.570)	10.41	99
07+09+24	1.26	1.62	4.32	7.2 (2.9-8.5)	2.390 (0.680-2.530)	10.50	99

MXZ-A26WV

NOTE: Electrical data is for outdoor unit only.

Indoor units combination	Cooling capacity (kW)				Outdoor unit power consumption (kW)	Current (A)	Power factor (%)
	Unit A	Unit B	Unit C	Total			
07+09+26	1.2	1.54	4.45	7.2 (2.9-8.5)	2.390 (0.680-2.530)	10.50	99
07+12+12	1.62	2.79	2.79	7.2 (2.9-8.5)	2.350 (0.690-2.570)	10.32	99
07+12+18	1.36	2.33	3.5	7.2 (2.9-8.5)	2.320 (0.700-2.540)	10.19	99
07+12+24	1.17	2.0	4.01	7.2 (2.9-8.5)	2.350 (0.680-2.520)	10.32	99
07+12+26	1.12	1.92	4.16	7.2 (2.9-8.5)	2.350 (0.680-2.520)	10.32	99
07+18+18	1.17	3.01	3.01	7.2 (2.9-8.5)	2.330 (0.680-2.520)	10.23	99
07+18+24	1.02	2.64	3.52	7.2 (2.9-8.5)	2.300 (0.660-2.490)	10.10	99
07+18+26	0.98	2.54	3.67	7.2 (2.9-8.5)	2.300 (0.660-2.490)	10.10	99
09+09+09	2.36	2.36	2.36	7.1 (2.9-8.5)	2.030 (0.690-2.650)	8.92	99
09+09+12	2.16	2.16	2.89	7.2 (2.9-8.5)	2.350 (0.690-2.620)	10.32	99
09+09+18	1.8	1.8	3.6	7.2 (2.9-8.5)	2.370 (0.700-2.570)	10.41	99
09+09+24	1.54	1.54	4.11	7.2 (2.9-8.5)	2.390 (0.680-2.530)	10.50	99
09+09+26	1.47	1.47	4.25	7.2 (2.9-8.5)	2.390 (0.680-2.530)	10.50	99
09+12+12	1.97	2.61	2.61	7.2 (2.9-8.5)	2.350 (0.690-2.570)	10.32	99
09+12+18	1.66	2.21	3.32	7.2 (2.9-8.5)	2.380 (0.700-2.540)	10.45	99
09+12+24	1.44	1.92	3.84	7.2 (2.9-8.5)	2.350 (0.680-2.520)	10.32	99
09+12+26	1.37	1.83	3.98	7.2 (2.9-8.5)	2.350 (0.680-2.520)	10.32	99
09+18+18	1.44	2.88	2.88	7.2 (2.9-8.5)	2.330 (0.660-2.500)	10.23	99
09+18+24	1.27	2.54	3.38	7.2 (2.9-8.5)	2.300 (0.660-2.500)	10.10	99
12+12+12	2.4	2.4	2.4	7.2 (2.9-8.5)	2.090 (0.720-2.560)	9.18	99
12+12+18	2.05	2.05	3.08	7.2 (2.9-8.5)	2.280 (0.700-2.530)	10.01	99
12+12+24	1.8	1.8	3.6	7.2 (2.9-8.5)	2.260 (0.680-2.500)	9.93	99
12+12+26	1.72	1.72	3.74	7.2 (2.9-8.5)	2.260 (0.680-2.500)	9.93	99
12+18+18	1.8	2.7	2.7	7.2 (2.9-8.5)	2.240 (0.680-2.500)	9.84	99
12+18+24	1.6	2.4	3.2	7.2 (2.9-8.5)	2.220 (0.660-2.470)	9.75	99

MXZ-A26WV

NOTE: Electrical data is for outdoor unit only.

Indoor units combination	Heating capacity (kW)				Outdoor unit power consumption (kW)	Current (A)	Power factor (%)
	Unit A	Unit B	Unit C	Total			
07	3.3	–	–	3.3 (1.2-4.2)	1.050 (0.340-1.380)	4.61	99
09	3.6	–	–	3.6 (1.2-4.5)	1.110 (0.340-1.510)	4.87	99
12	4.0	–	–	4.0 (1.2-4.8)	1.210 (0.330-1.570)	5.31	99
18	7.2	–	–	7.2 (1.4-8.2)	2.270 (0.330-2.710)	9.97	99
24	7.9	–	–	7.9 (1.4-8.6)	2.700 (0.330-3.060)	11.86	99
26	8.6	–	–	8.6 (1.6-9.2)	3.220 (0.360-3.520)	14.14	99
07+07	3.3	3.3	–	6.6 (1.8-7.2)	2.020 (0.480-2.760)	8.87	99
07+09	3.02	3.88	–	6.9 (1.8-8.7)	2.120 (0.480-3.000)	9.31	99
07+12	2.69	4.61	–	7.3 (1.8-9.2)	2.130 (0.480-3.110)	9.35	99
07+18	2.49	6.41	–	8.9 (1.8-9.9)	2.470 (0.460-3.140)	10.85	99
07+24	2.03	6.97	–	9.0 (1.8-9.9)	2.520 (0.460-3.140)	11.07	99
07+26	1.91	7.09	–	9.0 (1.8-9.9)	2.520 (0.460-3.140)	11.07	99
09+09	3.6	3.6	–	7.2 (1.8-9.1)	2.170 (0.480-3.140)	9.53	99
09+12	3.26	4.34	–	7.6 (1.8-9.5)	2.210 (0.480-3.230)	9.71	99
09+18	3.0	6.0	–	9.0 (1.8-10.1)	2.520 (0.460-3.260)	11.07	99
09+24	2.45	6.55	–	9.0 (1.8-10.1)	2.500 (0.460-3.260)	10.98	99
09+26	2.31	6.69	–	9.0 (1.8-10.1)	2.500 (0.460-3.260)	10.98	99
12+12	4.0	4.0	–	8.0 (1.8-9.8)	2.370 (0.480-3.230)	10.41	99
12+18	3.6	5.4	–	9.0 (1.8-10.5)	2.500 (0.460-3.420)	10.98	99
12+24	3.0	6.0	–	9.0 (1.8-10.5)	2.480 (0.460-3.420)	10.89	99
12+26	2.84	6.16	–	9.0 (1.8-10.5)	2.480 (0.460-3.420)	10.89	99
18+18	4.5	4.5	–	9.0 (1.9-11.0)	2.210 (0.440-3.260)	9.71	99
18+24	3.86	5.14	–	9.0 (1.9-11.0)	2.210 (0.440-3.260)	9.71	99
18+26	3.68	5.32	–	9.0 (1.9-11.0)	2.210 (0.440-3.260)	9.71	99
07+07+07	2.9	2.9	2.9	8.7 (2.6-10.6)	2.150 (0.530-3.150)	9.44	99
07+07+09	2.67	2.67	3.44	8.8 (2.6-11.0)	2.170 (0.530-3.170)	9.53	99
07+07+12	2.42	2.42	4.15	9.0 (2.6-11.0)	2.200 (0.530-3.190)	9.66	99
07+07+18	1.96	1.96	5.06	9.0 (2.6-11.0)	2.040 (0.510-3.040)	8.96	99
07+07+24	1.65	1.65	5.68	9.0 (2.6-11.0)	2.040 (0.510-3.040)	8.96	99
07+07+26	1.57	1.57	5.85	9.0 (2.6-11.0)	2.040 (0.510-3.040)	8.96	99
07+09+09	2.52	3.24	3.24	9.0 (2.6-11.0)	2.200 (0.530-3.260)	9.66	99
07+09+12	2.25	2.89	3.85	9.0 (2.6-11.0)	2.180 (0.530-3.180)	9.57	99
07+09+18	1.85	2.38	4.76	9.0 (2.6-11.0)	2.020 (0.510-3.040)	8.87	99
07+09+24	1.57	2.02	5.4	9.0 (2.6-11.0)	2.020 (0.510-3.040)	8.87	99

MXZ-A26WV

NOTE: Electrical data is for outdoor unit only.

Indoor units combination	Heating capacity (kW)				Outdoor unit power consumption (kW)	Current (A)	Power factor (%)
	Unit A	Unit B	Unit C	Total			
07+09+26	1.5	1.92	5.57	9.0 (2.6-11.0)	2.020 (0.510-3.040)	8.87	99
07+12+12	2.03	3.48	3.48	9.0 (2.6-11.0)	2.180 (0.530-3.150)	9.57	99
07+12+18	1.7	2.91	4.37	9.0 (2.7-11.0)	1.940 (0.510-2.950)	8.52	99
07+12+24	1.46	2.51	5.02	9.0 (2.7-11.0)	1.940 (0.510-2.950)	8.52	99
07+12+26	1.4	2.4	5.2	9.0 (2.7-11.0)	1.940 (0.510-2.950)	8.52	99
07+18+18	1.46	3.76	3.76	9.0 (2.7-11.0)	1.850 (0.490-2.830)	8.12	99
07+18+24	1.28	3.3	4.4	9.0 (2.7-11.0)	1.850 (0.490-2.830)	8.12	99
07+18+26	1.23	3.17	4.58	9.0 (2.7-11.0)	1.850 (0.490-2.830)	8.12	99
09+09+09	3.0	3.0	3.0	9.0 (2.6-11.0)	2.170 (0.530-3.230)	9.53	99
09+09+12	2.7	2.7	3.6	9.0 (2.6-11.0)	2.160 (0.530-3.180)	9.49	99
09+09+18	2.25	2.25	4.5	9.0 (2.6-11.0)	2.000 (0.510-3.030)	8.78	99
09+09+24	1.92	1.92	5.14	9.0 (2.6-11.0)	2.000 (0.510-3.030)	8.78	99
09+09+26	1.84	1.84	5.31	9.0 (2.6-11.0)	2.000 (0.510-3.030)	8.78	99
09+12+12	2.45	3.27	3.27	9.0 (2.6-11.0)	2.160 (0.530-3.150)	9.49	99
09+12+18	2.07	2.76	4.15	9.0 (2.7-11.0)	1.920 (0.510-2.950)	8.43	99
09+12+24	1.8	2.4	4.8	9.0 (2.7-11.0)	1.920 (0.510-2.950)	8.43	99
09+12+26	1.72	2.29	4.97	9.0 (2.7-11.0)	1.920 (0.510-2.950)	8.43	99
09+18+18	1.8	3.6	3.6	9.0 (2.7-11.0)	1.830 (0.490-2.830)	8.04	99
09+18+24	1.58	3.17	4.23	9.0 (2.7-11.0)	1.830 (0.490-2.830)	8.04	99
12+12+12	3.0	3.0	3.0	9.0 (2.6-11.0)	2.150 (0.530-3.050)	9.44	99
12+12+18	2.57	2.57	3.85	9.0 (2.7-11.0)	1.890 (0.510-2.890)	8.30	99
12+12+24	2.25	2.25	4.5	9.0 (2.7-11.0)	1.890 (0.510-2.890)	8.30	99
12+12+26	2.16	2.16	4.68	9.0 (2.7-11.0)	1.890 (0.510-2.890)	8.30	99
12+18+18	2.25	3.37	3.37	9.0 (2.7-11.0)	1.800 (0.490-2.770)	7.91	99
12+18+24	2.0	3.0	4.0	9.0 (2.7-11.0)	1.800 (0.490-2.770)	7.91	99

MXZ-A32WV

NOTE: Electrical data is for outdoor unit only.

Indoor units combination	Cooling capacity (kW)					Outdoor unit power consumption (kW)	Current (A)	Power factor (%)
	Unit A	Unit B	Unit C	Unit D	Total			
07	2.3	–	–	–	2.3 (1.4-3.0)	0.710 (0.400-0.920)	3.12	99
09	2.5	–	–	–	2.5 (1.4-3.3)	0.760 (0.400-1.010)	3.34	99
12	3.4	–	–	–	3.4 (1.5-4.3)	1.000 (0.400-1.290)	4.39	99
18	5.0	–	–	–	5.0 (1.6-5.6)	1.440 (0.420-1.630)	6.32	99
24	6.0	–	–	–	6.0 (1.6-6.6)	1.930 (0.400-2.130)	8.48	99
26	7.1	–	–	–	7.1 (1.7-7.4)	2.580 (0.410-2.710)	11.33	99
07+07	2.3	2.3	–	–	4.6 (2.0-5.4)	1.180 (0.600-1.600)	5.18	99
07+09	2.1	2.7	–	–	4.8 (2.0-5.8)	1.300 (0.600-1.770)	5.71	99
07+12	2.1	3.6	–	–	5.7 (2.0-6.6)	1.710 (0.600-2.200)	7.51	99
07+18	2.04	5.25	–	–	7.3 (2.0-7.7)	2.480 (0.560-2.710)	10.89	99
07+24	1.75	6.0	–	–	7.75 (2.0-8.0)	2.750 (0.560-3.050)	12.08	99
07+26	1.66	6.19	–	–	7.85 (2.0-8.2)	2.810 (0.560-3.200)	12.34	99
09+09	2.5	2.5	–	–	5.0 (2.0-6.2)	1.360 (0.580-1.950)	5.97	99
09+12	2.52	3.37	–	–	5.9 (2.0-7.3)	1.860 (0.580-2.670)	8.17	99
09+18	2.5	5.0	–	–	7.5 (2.0-8.5)	2.580 (0.560-3.200)	11.33	99
09+24	2.11	5.64	–	–	7.75 (2.0-8.6)	2.750 (0.560-3.280)	12.08	99
09+26	2.01	5.84	–	–	7.85 (2.0-8.7)	2.810 (0.560-3.320)	12.34	99
12+12	3.4	3.4	–	–	6.8 (2.0-8.8)	2.330 (0.580-3.270)	10.23	99
12+18	3.1	4.65	–	–	7.75 (2.0-8.8)	2.760 (0.560-3.220)	12.12	99
12+24	2.61	5.24	–	–	7.85 (2.0-8.8)	2.730 (0.560-3.180)	11.99	99
12+26	2.51	5.44	–	–	7.95 (2.0-8.8)	2.780 (0.560-3.180)	12.21	99
18+18	3.95	3.95	–	–	7.9 (2.1-8.8)	2.780 (0.590-3.160)	12.21	99
18+24	3.42	4.57	–	–	8.0 (2.1-8.8)	2.800 (0.570-3.120)	12.30	99
18+26	3.27	4.72	–	–	8.0 (2.1-8.8)	2.800 (0.570-3.120)	12.30	99
24+24	4.0	4.0	–	–	8.0 (2.1-8.8)	2.690 (0.550-3.080)	11.81	99
24+26	3.84	4.16	–	–	8.0 (2.1-8.8)	2.690 (0.550-3.080)	11.81	99
07+07+07	2.3	2.3	2.3	–	6.9 (2.9-8.1)	1.940 (0.690-2.410)	8.52	99
07+07+09	2.16	2.16	2.77	–	7.1 (2.9-8.6)	2.030 (0.690-2.720)	8.92	99
07+07+12	2.07	2.07	3.55	–	7.7 (2.9-9.0)	2.310 (0.690-2.970)	10.14	99
07+07+18	1.72	1.72	4.41	–	7.85 (2.9-9.0)	2.320 (0.700-2.920)	10.19	99
07+07+24	1.46	1.46	5.03	–	7.95 (2.9-9.0)	2.370 (0.680-2.880)	10.41	99
07+07+26	1.4	1.4	5.2	–	8.0 (2.9-9.0)	2.390 (0.680-2.880)	10.50	99
07+09+09	2.04	2.62	2.62	–	7.3 (2.9-8.9)	2.130 (0.690-2.940)	9.35	99
07+09+12	1.93	2.49	3.33	–	7.75 (2.9-9.0)	2.350 (0.690-2.970)	10.32	99

MXZ-A32WV

NOTE: Electrical data is for outdoor unit only.

Indoor units combination	Cooling capacity (kW)					Outdoor unit power consumption (kW)	Current (A)	Power factor (%)
	Unit A	Unit B	Unit C	Unit D	Total			
07+09+18	1.62	2.09	4.18	–	7.9 (2.9-9.0)	2.370 (0.700-2.920)	10.41	99
07+09+24	1.4	1.8	4.8	–	8.0 (2.9-9.0)	2.390 (0.680-2.880)	10.50	99
07+09+26	1.33	1.71	4.95	–	8.0 (2.9-9.0)	2.390 (0.680-2.880)	10.50	99
07+12+12	1.77	3.04	3.04	–	7.85 (2.9-9.0)	2.350 (0.690-2.920)	10.32	99
07+12+18	1.49	2.56	3.84	–	7.9 (2.9-9.0)	2.320 (0.700-2.890)	10.19	99
07+12+24	1.3	2.23	4.46	–	8.0 (2.9-9.0)	2.350 (0.680-2.860)	10.32	99
07+12+26	1.24	2.13	4.62	–	8.0 (2.9-9.0)	2.350 (0.680-2.860)	10.32	99
07+18+18	1.3	3.34	3.34	–	8.0 (2.9-9.0)	2.330 (0.680-2.860)	10.23	99
07+18+24	1.14	2.93	3.91	–	8.0 (2.9-9.0)	2.300 (0.660-2.830)	10.10	99
07+18+26	1.09	2.82	4.07	–	8.0 (2.9-9.0)	2.300 (0.660-2.830)	10.10	99
09+09+09	2.36	2.36	2.36	–	7.1 (2.9-9.0)	2.030 (0.690-3.010)	8.92	99
09+09+12	2.32	2.32	3.11	–	7.75 (2.9-9.0)	2.350 (0.690-2.970)	10.32	99
09+09+18	1.97	1.97	3.95	–	7.9 (2.9-9.0)	2.370 (0.700-2.920)	10.41	99
09+09+24	1.71	1.71	4.57	–	8.0 (2.9-9.0)	2.390 (0.680-2.880)	10.50	99
09+09+26	1.63	1.63	4.72	–	8.0 (2.9-9.0)	2.390 (0.680-2.880)	10.50	99
09+12+12	2.15	2.85	2.85	–	7.85 (2.9-9.0)	2.350 (0.690-2.920)	10.32	99
09+12+18	1.84	2.46	3.69	–	8.0 (2.9-9.0)	2.380 (0.700-2.890)	10.45	99
09+12+24	1.6	2.13	4.26	–	8.0 (2.9-9.0)	2.350 (0.680-2.860)	10.32	99
09+12+26	1.53	2.04	4.42	–	8.0 (2.9-9.0)	2.350 (0.680-2.860)	10.32	99
09+18+18	1.6	3.2	3.2	–	8.0 (2.9-9.0)	2.330 (0.660-2.840)	10.23	99
09+18+24	1.41	2.82	3.76	–	8.0 (2.9-9.0)	2.300 (0.660-2.830)	10.10	99
12+12+12	2.65	2.65	2.65	–	7.95 (2.9-9.0)	2.280 (0.720-2.910)	10.01	99
12+12+18	2.28	2.28	3.42	–	8.0 (2.9-9.0)	2.280 (0.700-2.870)	10.01	99
12+12+24	2.0	2.0	4.0	–	8.0 (2.9-9.0)	2.260 (0.680-2.840)	9.93	99
12+12+26	1.92	1.92	4.16	–	8.0 (2.9-9.0)	2.260 (0.680-2.840)	9.93	99
12+18+18	2.0	3.0	3.0	–	8.0 (2.9-9.0)	2.240 (0.680-2.840)	9.84	99
12+18+24	1.77	2.66	3.55	–	8.0 (2.9-9.0)	2.220 (0.660-2.810)	9.75	99
07+07+07+07	1.95	1.95	1.95	1.95	7.8 (3.7-9.2)	2.180 (0.810-2.670)	9.57	99
07+07+07+09	1.83	1.83	1.83	2.36	7.85 (3.7-9.2)	2.190 (0.810-2.670)	9.62	99
07+07+07+12	1.68	1.68	1.68	2.91	7.95 (3.7-9.2)	2.210 (0.810-2.650)	9.71	99
07+07+07+18	1.43	1.43	1.43	3.69	8.0 (3.7-9.2)	2.150 (0.790-2.620)	9.44	99
07+07+07+24	1.24	1.24	1.24	4.26	8.0 (3.7-9.2)	2.130 (0.770-2.590)	9.35	99
07+07+07+26	1.19	1.19	1.19	4.42	8.0 (3.7-9.2)	2.130 (0.770-2.590)	9.35	99
07+07+09+09	1.72	1.72	2.2	2.2	7.85 (3.7-9.2)	2.190 (0.810-2.670)	9.62	99

MXZ-A32WV

NOTE: Electrical data is for outdoor unit only.

Indoor units combination	Cooling capacity (kW)					Outdoor unit power consumption (kW)	Current (A)	Power factor (%)
	Unit A	Unit B	Unit C	Unit D	Total			
07+07+09+12	1.59	1.59	2.04	2.72	7.95 (3.7-9.2)	2.210 (0.810-2.650)	9.71	99
07+07+09+18	1.36	1.36	1.75	3.51	8.0 (3.7-9.2)	2.150 (0.790-2.620)	9.44	99
07+07+09+24	1.19	1.19	1.53	4.08	8.0 (3.7-9.2)	2.130 (0.770-2.590)	9.35	99
07+07+09+26	1.14	1.14	1.46	4.24	8.0 (3.7-9.2)	2.130 (0.770-2.590)	9.35	99
07+07+12+12	1.47	1.47	2.52	2.52	8.0 (3.7-9.2)	2.210 (0.810-2.620)	9.71	99
07+07+12+18	1.27	1.27	2.18	3.27	8.0 (3.7-9.2)	2.120 (0.790-2.590)	9.31	99
07+07+12+24	1.12	1.12	1.92	3.84	8.0 (3.7-9.2)	2.100 (0.770-2.560)	9.22	99
07+07+18+18	1.12	1.12	2.88	2.88	8.0 (3.7-9.2)	2.070 (0.770-2.560)	9.09	99
07+09+09+09	1.62	2.09	2.09	2.09	7.9 (3.7-9.2)	2.140 (0.810-2.670)	9.40	99
07+09+09+12	1.5	1.93	1.93	2.59	7.95 (3.7-9.2)	2.210 (0.810-2.650)	9.71	99
07+09+09+18	1.3	1.67	1.67	3.34	8.0 (3.7-9.2)	2.150 (0.790-2.620)	9.44	99
07+09+09+24	1.14	1.46	1.46	3.91	8.0 (3.7-9.2)	2.130 (0.770-2.590)	9.35	99
07+09+12+12	1.4	1.8	2.4	2.4	8.0 (3.7-9.2)	2.210 (0.810-2.620)	9.71	99
07+09+12+18	1.21	1.56	2.08	3.13	8.0 (3.7-9.2)	2.120 (0.790-2.590)	9.31	99
07+09+12+24	1.07	1.38	1.84	3.69	8.0 (3.7-9.2)	2.100 (0.770-2.560)	9.22	99
07+12+12+12	1.3	2.23	2.23	2.23	8.0 (3.7-9.2)	2.200 (0.810-2.610)	9.66	99
07+12+12+18	1.14	1.95	1.95	2.93	8.0 (3.7-9.2)	2.080 (0.790-2.580)	9.13	99
09+09+09+09	1.97	1.97	1.97	1.97	7.9 (3.7-9.2)	2.140 (0.810-2.670)	9.40	99
09+09+09+12	1.84	1.84	1.84	2.46	8.0 (3.7-9.2)	2.220 (0.810-2.650)	9.75	99
09+09+09+18	1.6	1.6	1.6	3.2	8.0 (3.7-9.2)	2.150 (0.790-2.620)	9.44	99
09+09+09+24	1.41	1.41	1.41	3.76	8.0 (3.7-9.2)	2.130 (0.770-2.590)	9.35	99
09+09+12+12	1.56	1.75	2.34	2.34	8.0 (3.7-9.2)	2.210 (0.810-2.620)	9.71	99
09+09+12+18	1.5	1.5	2.0	3.0	8.0 (3.7-9.2)	2.120 (0.790-2.590)	9.31	99
09+12+12+12	1.6	2.13	2.13	2.13	8.0 (3.7-9.2)	2.200 (0.810-2.610)	9.66	99
12+12+12+12	2.0	2.0	2.0	2.0	8.0 (3.7-9.2)	2.190 (0.810-2.580)	9.62	99

MXZ-A32WV

NOTE: Electrical data is for outdoor unit only.

Indoor units combination	Heating capacity (kW)					Outdoor unit power consumption (kW)	Current (A)	Power factor (%)
	Unit A	Unit B	Unit C	Unit D	Total			
07	3.3	–	–	–	3.3 (1.2-4.2)	1.050 (0.340-1.380)	4.61	99
09	3.6	–	–	–	3.6 (1.2-4.5)	1.110 (0.340-1.510)	4.87	99
12	4.0	–	–	–	4.0 (1.2-4.8)	1.210 (0.330-1.570)	5.31	99
18	7.2	–	–	–	7.2 (1.4-8.2)	2.270 (0.330-2.710)	9.97	99
24	7.9	–	–	–	7.9 (1.4-8.6)	2.700 (0.330-3.060)	11.86	99
26	8.6	–	–	–	8.6 (1.6-9.2)	3.220 (0.360-3.520)	14.14	99
07+07	3.3	3.3	–	–	6.6 (1.8-7.2)	2.020 (0.480-2.760)	8.87	99
07+09	3.02	3.88	–	–	6.9 (1.8-8.7)	2.120 (0.480-3.000)	9.31	99
07+12	2.69	4.61	–	–	7.3 (1.8-9.2)	2.130 (0.480-3.110)	9.35	99
07+18	2.49	6.41	–	–	8.9 (1.8-9.9)	2.470 (0.460-3.140)	10.85	99
07+24	2.12	7.28	–	–	9.4 (1.8-9.9)	2.710 (0.460-3.140)	11.90	99
07+26	1.99	7.41	–	–	9.4 (1.8-9.9)	2.710 (0.460-3.140)	11.90	99
09+09	3.6	3.6	–	–	7.2 (1.8-9.1)	2.170 (0.480-3.140)	9.53	99
09+12	3.26	4.34	–	–	7.6 (1.8-9.5)	2.210 (0.480-3.230)	9.71	99
09+18	3.0	6.0	–	–	9.0 (1.8-10.1)	2.520 (0.460-3.260)	11.07	99
09+24	2.56	6.84	–	–	9.4 (1.8-10.1)	2.710 (0.460-3.260)	11.90	99
09+26	2.42	6.98	–	–	9.4 (1.8-10.1)	2.710 (0.460-3.260)	11.90	99
12+12	4.0	4.0	–	–	8.0 (1.8-9.8)	2.370 (0.480-3.230)	10.41	99
12+18	3.76	5.64	–	–	9.4 (1.8-10.5)	2.560 (0.460-3.420)	11.24	99
12+24	3.13	6.27	–	–	9.4 (1.8-10.5)	2.560 (0.460-3.420)	11.24	99
12+26	2.97	6.43	–	–	9.4 (1.8-10.5)	2.560 (0.460-3.420)	11.24	99
18+18	4.7	4.7	–	–	9.4 (1.9-11.2)	2.370 (0.440-3.320)	10.41	99
18+24	4.03	5.37	–	–	9.4 (1.9-11.2)	2.370 (0.440-3.320)	10.41	99
18+26	3.85	5.55	–	–	9.4 (1.9-11.2)	2.370 (0.440-3.320)	10.41	99
24+24	4.7	4.7	–	–	9.4 (1.9-11.2)	2.370 (0.440-3.320)	10.41	99
24+26	4.51	4.89	–	–	9.4 (1.9-11.2)	2.370 (0.440-3.320)	10.41	99
07+07+07	2.9	2.9	2.9	–	8.7 (2.6-10.6)	2.150 (0.530-3.060)	9.44	99
07+07+09	2.67	2.67	3.44	–	8.8 (2.6-11.1)	2.170 (0.530-3.330)	9.53	99
07+07+12	2.53	2.53	4.33	–	9.4 (2.6-11.6)	2.310 (0.530-3.400)	10.14	99
07+07+18	2.05	2.05	5.28	–	9.4 (2.6-11.6)	2.120 (0.510-3.330)	9.31	99
07+07+24	1.73	1.73	5.93	–	9.4 (2.6-11.6)	2.120 (0.510-3.330)	9.31	99
07+07+26	1.64	1.64	6.11	–	9.4 (2.6-11.6)	2.120 (0.510-3.330)	9.31	99
07+09+09	2.49	3.2	3.2	–	8.9 (2.6-11.6)	2.170 (0.530-3.420)	9.53	99
07+09+12	2.35	3.02	4.02	–	9.4 (2.6-11.6)	2.270 (0.530-3.410)	9.97	99

MXZ-A32WV

NOTE: Electrical data is for outdoor unit only.

Indoor units combination	Heating capacity (kW)					Outdoor unit power consumption (kW)	Current (A)	Power factor (%)
	Unit A	Unit B	Unit C	Unit D	Total			
07+09+18	1.93	2.48	4.97	–	9.4 (2.6-11.6)	2.100 (0.510-3.330)	9.22	99
07+09+24	1.64	2.11	5.64	–	9.4 (2.6-11.6)	2.100 (0.510-3.330)	9.22	99
07+09+26	1.56	2.01	5.81	–	9.4 (2.6-11.6)	2.100 (0.510-3.330)	9.22	99
07+12+12	2.12	3.63	3.63	–	9.4 (2.6-11.6)	2.210 (0.530-3.400)	9.71	99
07+12+18	1.77	3.04	4.57	–	9.4 (2.7-11.6)	2.050 (0.510-3.230)	9.00	99
07+12+24	1.53	2.62	5.24	–	9.4 (2.7-11.6)	2.050 (0.510-3.230)	9.00	99
07+12+26	1.46	2.5	5.43	–	9.4 (2.7-11.6)	2.050 (0.510-3.230)	9.00	99
07+18+18	1.53	3.93	3.93	–	9.4 (2.7-11.6)	1.960 (0.490-3.100)	8.61	99
07+18+24	1.34	3.45	4.6	–	9.4 (2.7-11.6)	1.960 (0.490-3.100)	8.61	99
07+18+26	1.29	3.31	4.79	–	9.4 (2.7-11.6)	1.960 (0.490-3.100)	8.61	99
09+09+09	3.0	3.0	3.0	–	9.0 (2.6-11.6)	2.170 (0.530-3.420)	9.53	99
09+09+12	2.82	2.82	3.76	–	9.4 (2.6-11.6)	2.250 (0.530-3.410)	9.88	99
09+09+18	2.35	2.35	4.7	–	9.4 (2.6-11.6)	2.090 (0.510-3.320)	9.18	99
09+09+24	2.01	2.01	5.37	–	9.4 (2.6-11.6)	2.090 (0.510-3.320)	9.18	99
09+09+26	1.92	1.92	5.55	–	9.4 (2.6-11.6)	2.090 (0.510-3.320)	9.18	99
09+12+12	2.56	3.41	3.41	–	9.4 (2.6-11.6)	2.190 (0.530-3.400)	9.62	99
09+12+18	2.16	2.89	4.33	–	9.4 (2.7-11.6)	2.030 (0.510-3.230)	8.92	99
09+12+24	1.88	2.5	5.01	–	9.4 (2.7-11.6)	2.030 (0.510-3.230)	8.92	99
09+12+26	1.8	2.4	5.2	–	9.4 (2.7-11.6)	2.030 (0.510-3.230)	8.92	99
09+18+18	1.88	3.76	3.76	–	9.4 (2.7-11.6)	1.940 (0.490-3.100)	8.52	99
09+18+24	1.65	3.31	4.42	–	9.4 (2.7-11.6)	1.940 (0.490-3.100)	8.52	99
12+12+12	3.13	3.13	3.13	–	9.4 (2.6-11.6)	2.170 (0.530-3.380)	9.53	99
12+12+18	2.68	2.68	4.02	–	9.4 (2.7-11.6)	2.010 (0.510-3.160)	8.83	99
12+12+24	2.35	2.35	4.7	–	9.4 (2.7-11.6)	2.010 (0.510-3.160)	8.83	99
12+12+26	2.25	2.25	4.88	–	9.4 (2.7-11.6)	2.010 (0.510-3.160)	8.83	99
12+18+18	2.35	3.52	3.52	–	9.4 (2.7-11.6)	1.920 (0.490-3.030)	8.43	99
12+18+24	2.08	3.13	4.17	–	9.4 (2.7-11.6)	1.920 (0.490-3.030)	8.43	99
07+07+07+07	2.35	2.35	2.35	2.35	9.4 (3.4-11.6)	2.020 (0.590-3.420)	8.87	99
07+07+07+09	2.19	2.19	2.19	2.82	9.4 (3.4-11.6)	1.990 (0.590-3.410)	8.74	99
07+07+07+12	1.99	1.99	1.99	3.41	9.4 (3.4-11.6)	1.960 (0.590-3.390)	8.61	99
07+07+07+18	1.68	1.68	1.68	4.33	9.4 (3.5-11.6)	1.910 (0.580-3.260)	8.39	99
07+07+07+24	1.46	1.46	1.46	5.01	9.4 (3.5-11.6)	1.910 (0.580-3.260)	8.39	99
07+07+07+26	1.4	1.4	1.4	5.2	9.4 (3.5-11.6)	1.910 (0.580-3.260)	8.39	99
07+07+09+09	2.05	2.05	2.64	2.64	9.4 (3.4-11.6)	1.980 (0.590-3.400)	8.70	99

MXZ-A32WV

NOTE: Electrical data is for outdoor unit only.

Indoor units combination	Heating capacity (kW)					Outdoor unit power consumption (kW)	Current (A)	Power factor (%)
	Unit A	Unit B	Unit C	Unit D	Total			
07+07+09+12	1.88	1.88	2.41	3.22	9.4 (3.4-11.6)	1.940 (0.590-3.390)	8.52	99
07+07+09+18	1.6	1.6	2.06	4.12	9.4 (3.5-11.6)	1.890 (0.580-3.270)	8.30	99
07+07+09+24	1.4	1.4	1.8	4.8	9.4 (3.5-11.6)	1.890 (0.580-3.270)	8.30	99
07+07+09+26	1.34	1.34	1.72	4.98	9.4 (3.5-11.6)	1.890 (0.580-3.270)	8.30	99
07+07+12+12	1.73	1.73	2.96	2.96	9.4 (3.4-11.6)	1.910 (0.590-3.340)	8.39	99
07+07+12+18	1.49	1.49	2.56	3.84	9.4 (3.5-11.6)	1.820 (0.580-3.220)	7.99	99
07+07+12+24	1.31	1.31	2.25	4.51	9.4 (3.5-11.6)	1.820 (0.580-3.220)	7.99	99
07+07+18+18	1.31	1.31	3.38	3.38	9.4 (3.4-11.6)	1.750 (0.550-3.130)	7.69	99
07+09+09+09	1.93	2.48	2.48	2.48	9.4 (3.4-11.6)	1.960 (0.590-3.390)	8.61	99
07+09+09+12	1.77	2.28	2.28	3.04	9.4 (3.4-11.6)	1.920 (0.590-3.370)	8.43	99
07+09+09+18	1.53	1.96	1.96	3.93	9.4 (3.5-11.6)	1.870 (0.580-3.230)	8.21	99
07+09+09+24	1.34	1.72	1.72	4.6	9.4 (3.5-11.6)	1.870 (0.580-3.230)	8.21	99
07+09+12+12	1.64	2.11	2.82	2.82	9.4 (3.4-11.6)	1.890 (0.590-3.320)	8.30	99
07+09+12+18	1.43	1.83	2.45	3.67	9.4 (3.5-11.6)	1.800 (0.580-3.200)	7.91	99
07+09+12+24	1.26	1.62	2.16	4.33	9.4 (3.5-11.6)	1.800 (0.580-3.200)	7.91	99
07+12+12+12	1.53	2.62	2.62	2.62	9.4 (3.4-11.6)	1.860 (0.590-3.280)	8.17	99
07+12+12+18	1.34	2.3	2.3	3.45	9.4 (3.5-11.6)	1.780 (0.580-3.210)	7.82	99
09+09+09+09	2.35	2.35	2.35	2.35	9.4 (3.4-11.6)	1.950 (0.590-3.390)	8.56	99
09+09+09+12	2.16	2.16	2.16	2.89	9.4 (3.4-11.6)	1.910 (0.590-3.350)	8.39	99
09+09+09+18	1.88	1.88	1.88	3.76	9.4 (3.5-11.6)	1.860 (0.580-3.210)	8.17	99
09+09+09+24	1.65	1.65	1.65	4.42	9.4 (3.5-11.6)	1.860 (0.580-3.210)	8.17	99
09+09+12+12	1.83	2.06	2.75	2.75	9.4 (3.4-11.6)	1.870 (0.590-3.300)	8.21	99
09+09+12+18	1.76	1.76	2.35	3.52	9.4 (3.5-11.6)	1.780 (0.580-3.190)	7.82	99
09+12+12+12	1.88	2.5	2.5	2.5	9.4 (3.4-11.6)	1.840 (0.590-3.260)	8.08	99
12+12+12+12	2.35	2.35	2.35	2.35	9.4 (3.4-11.6)	1.930 (0.590-3.230)	8.48	99

C.3.3 OUTLINES AND DIMENSIONS

C.3.3.1 Cool Only

Unit : mm

OUTDOOR UNIT

MUX-A10WV

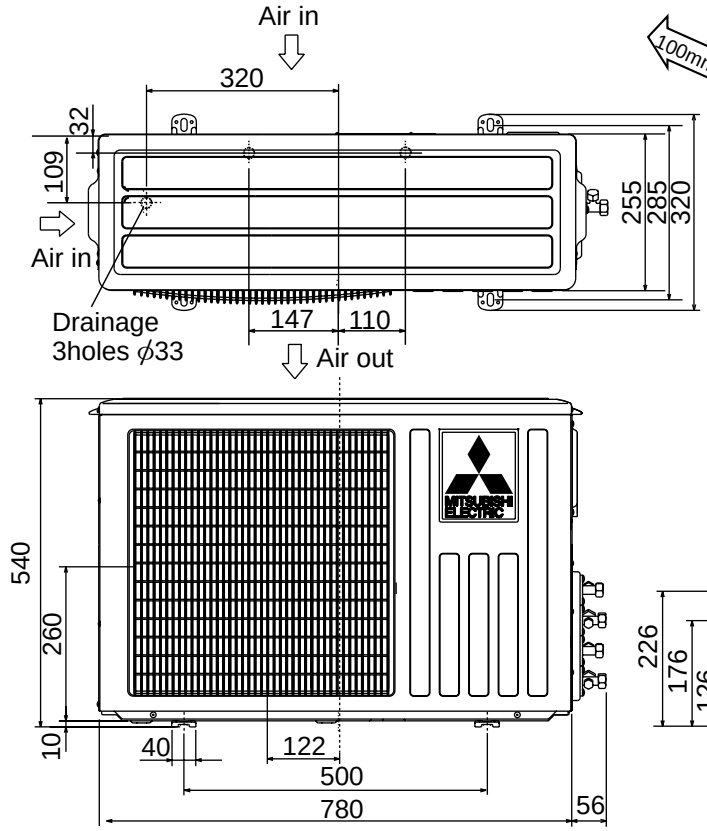

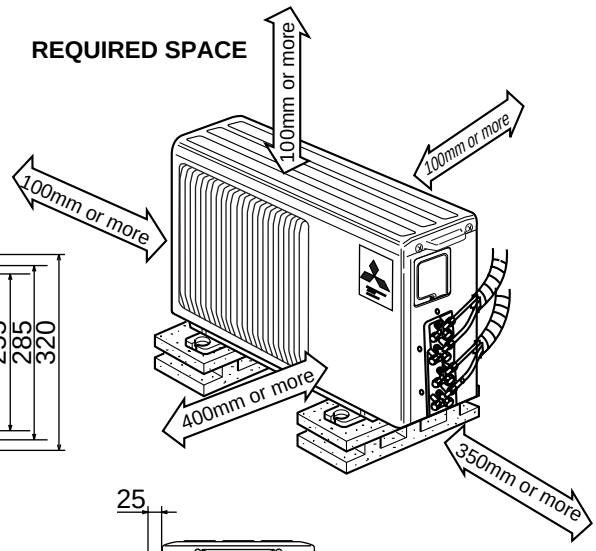

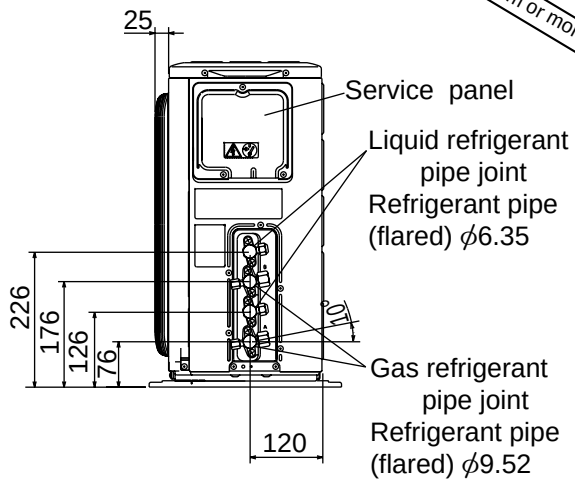

MUX-A19WV

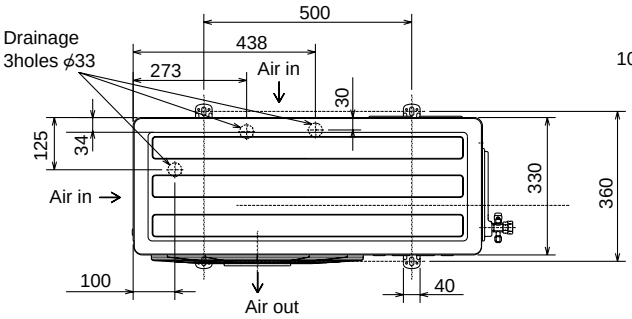

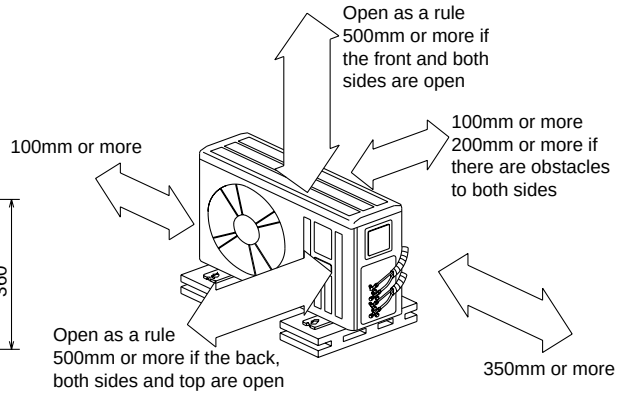

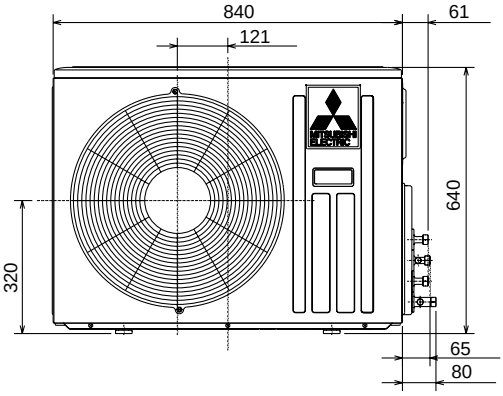

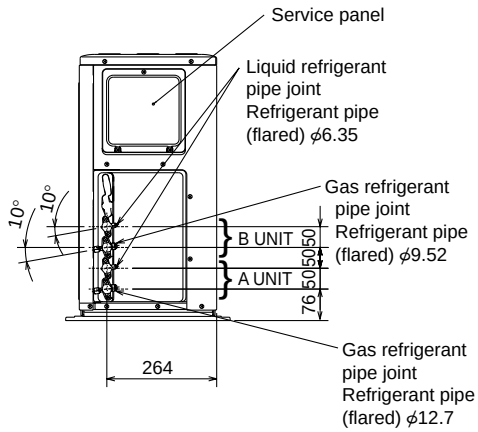

OUTDOOR UNIT

Unit : mm

MUX-A20WV

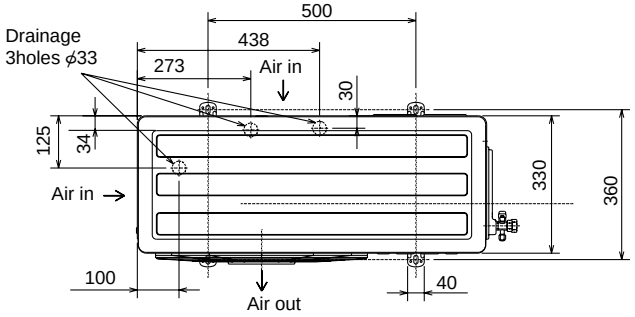

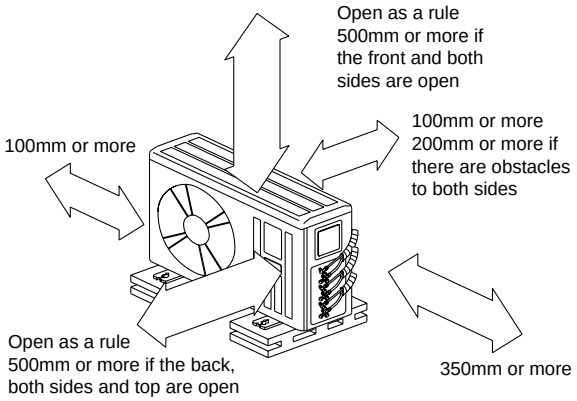

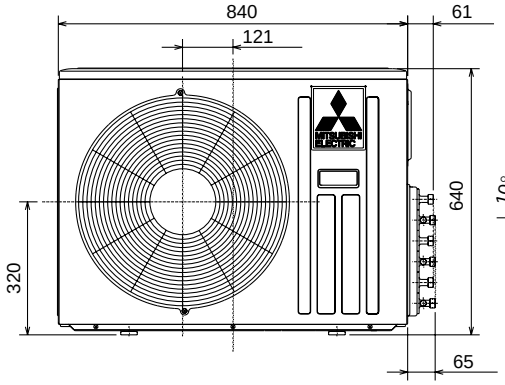

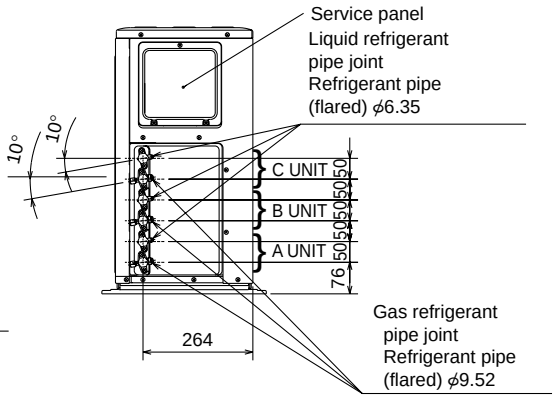

MUX-A22WV

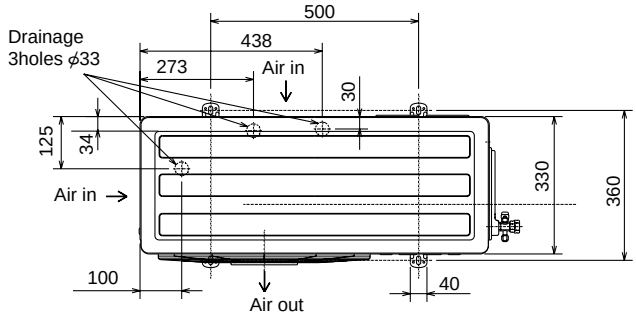

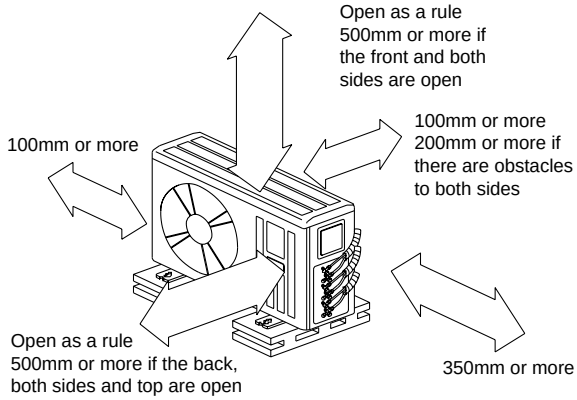

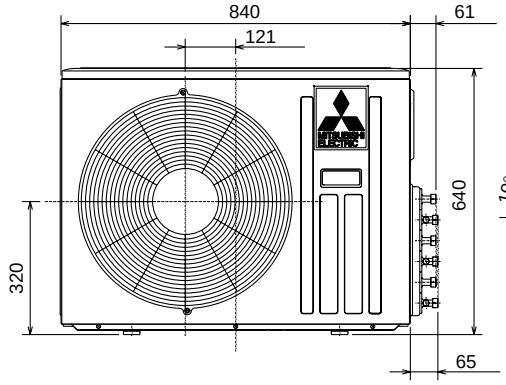

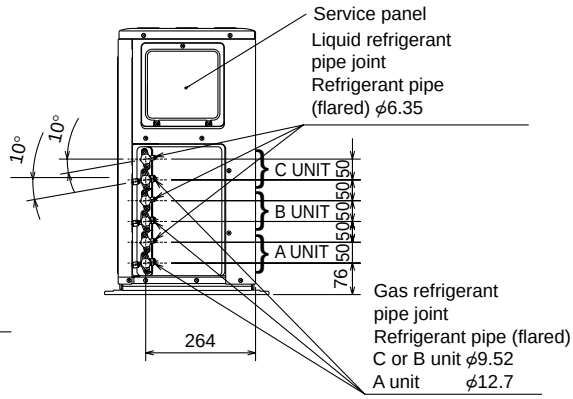

OUTDOOR UNIT

Unit : mm

MUX-A25WV

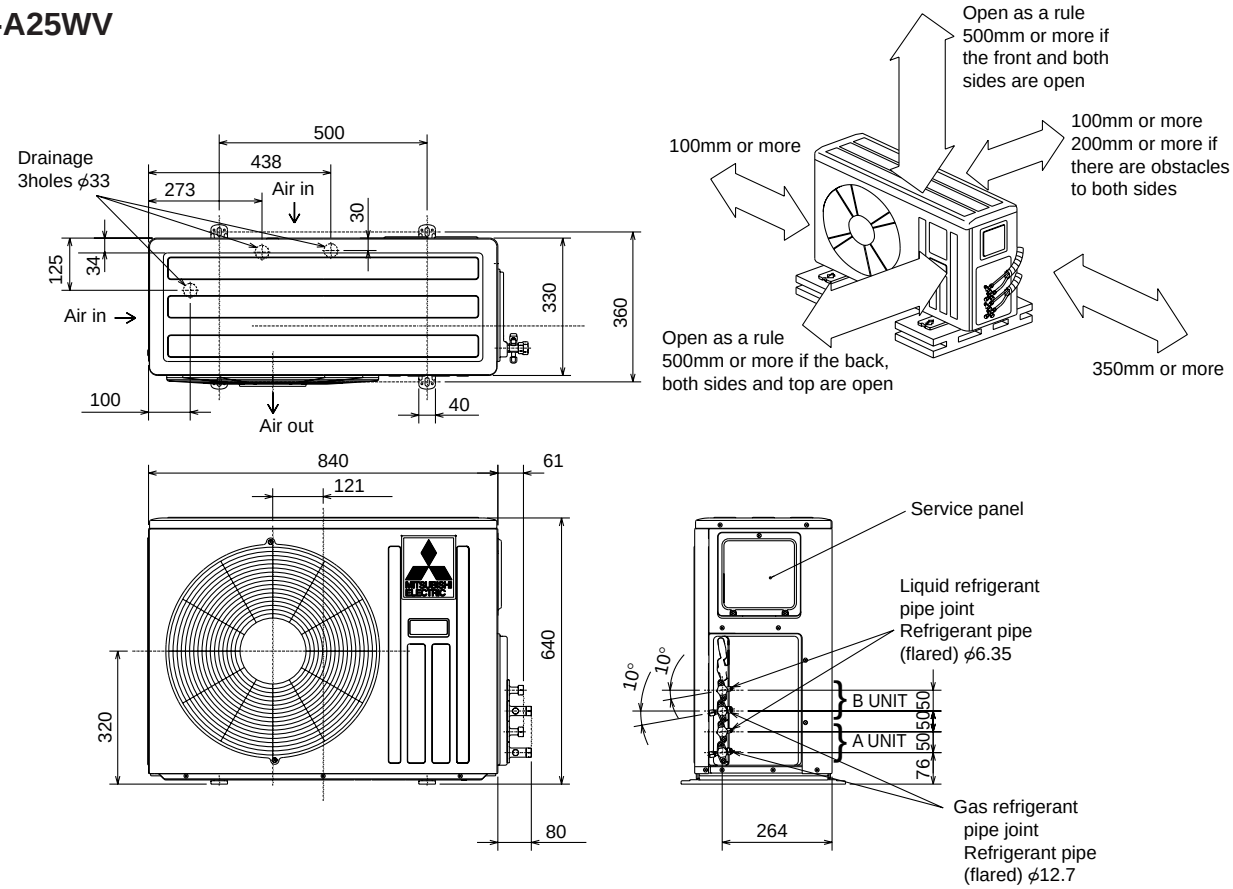

MUX-A26WV

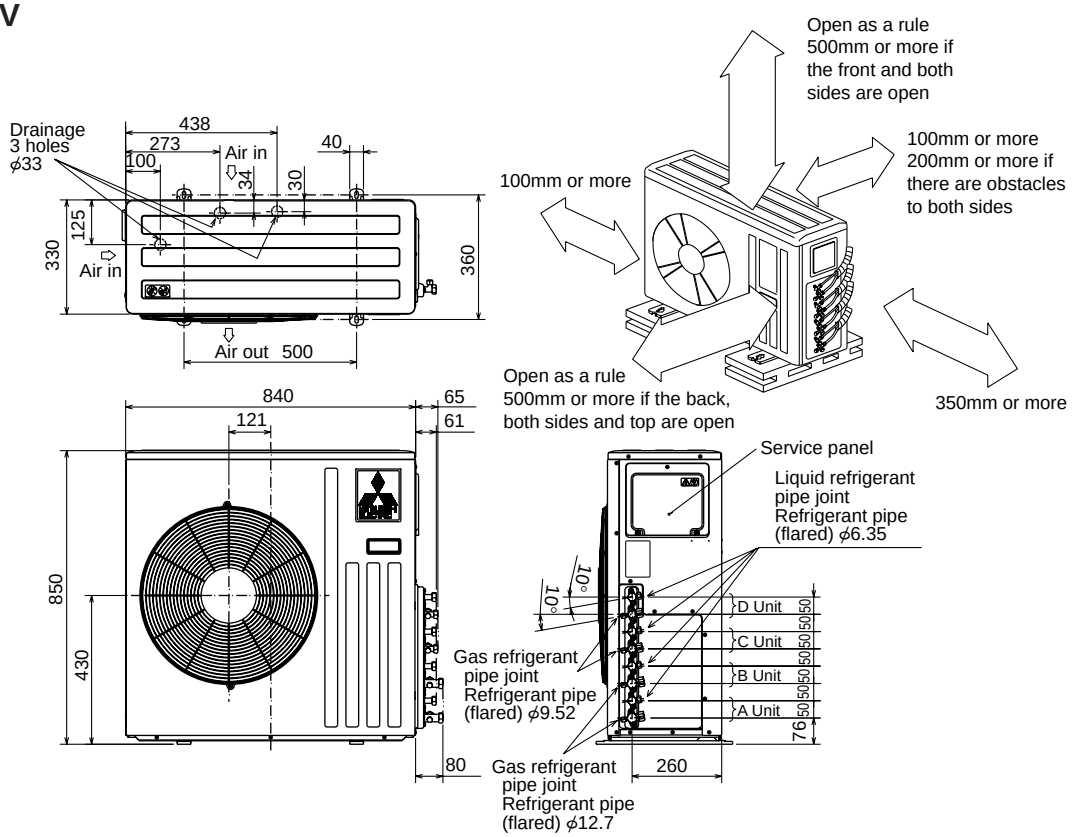

INDOOR UNIT

Unit : mm

MSC-A07WV
MSC-A09WV

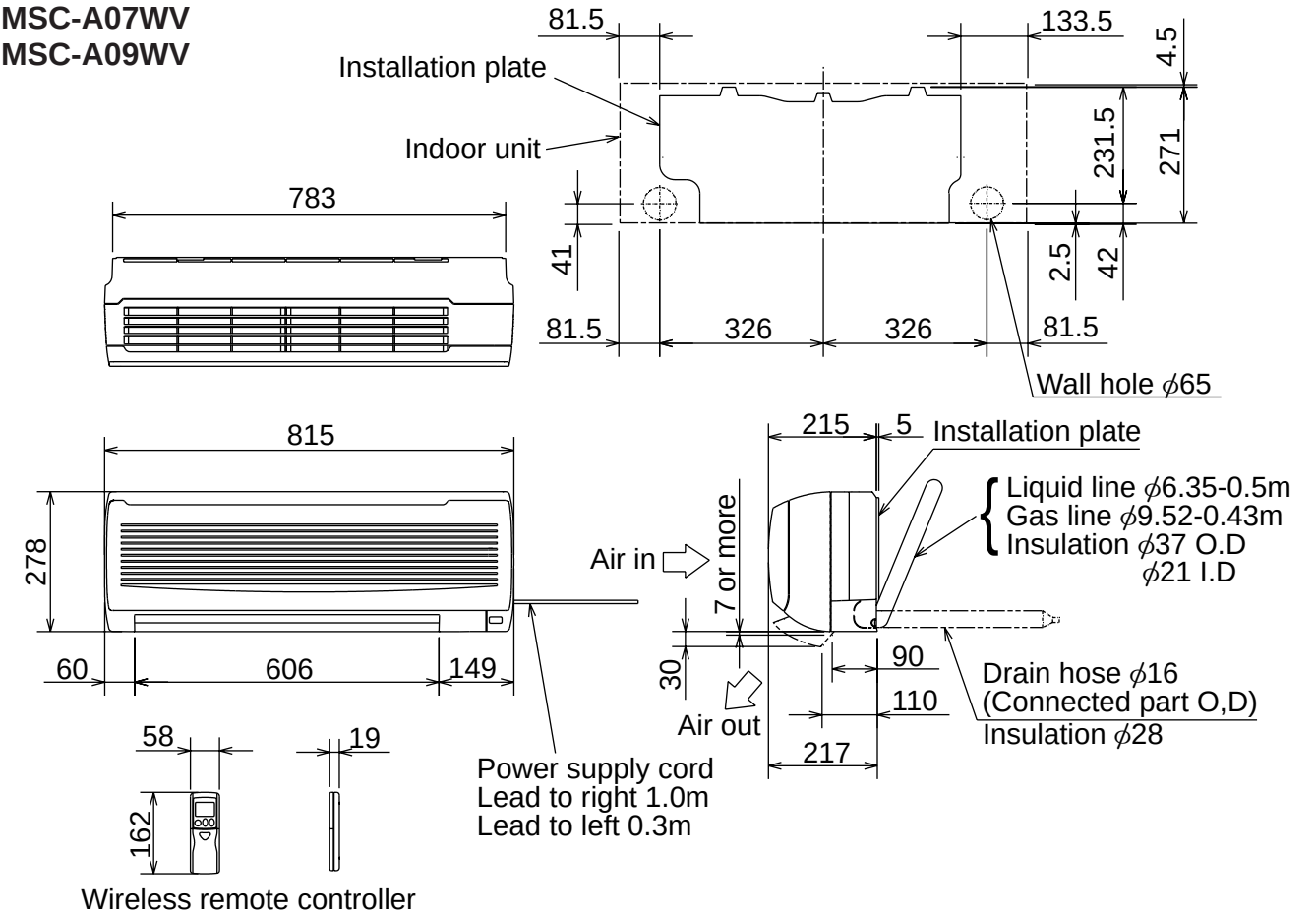

MSC-A12WV

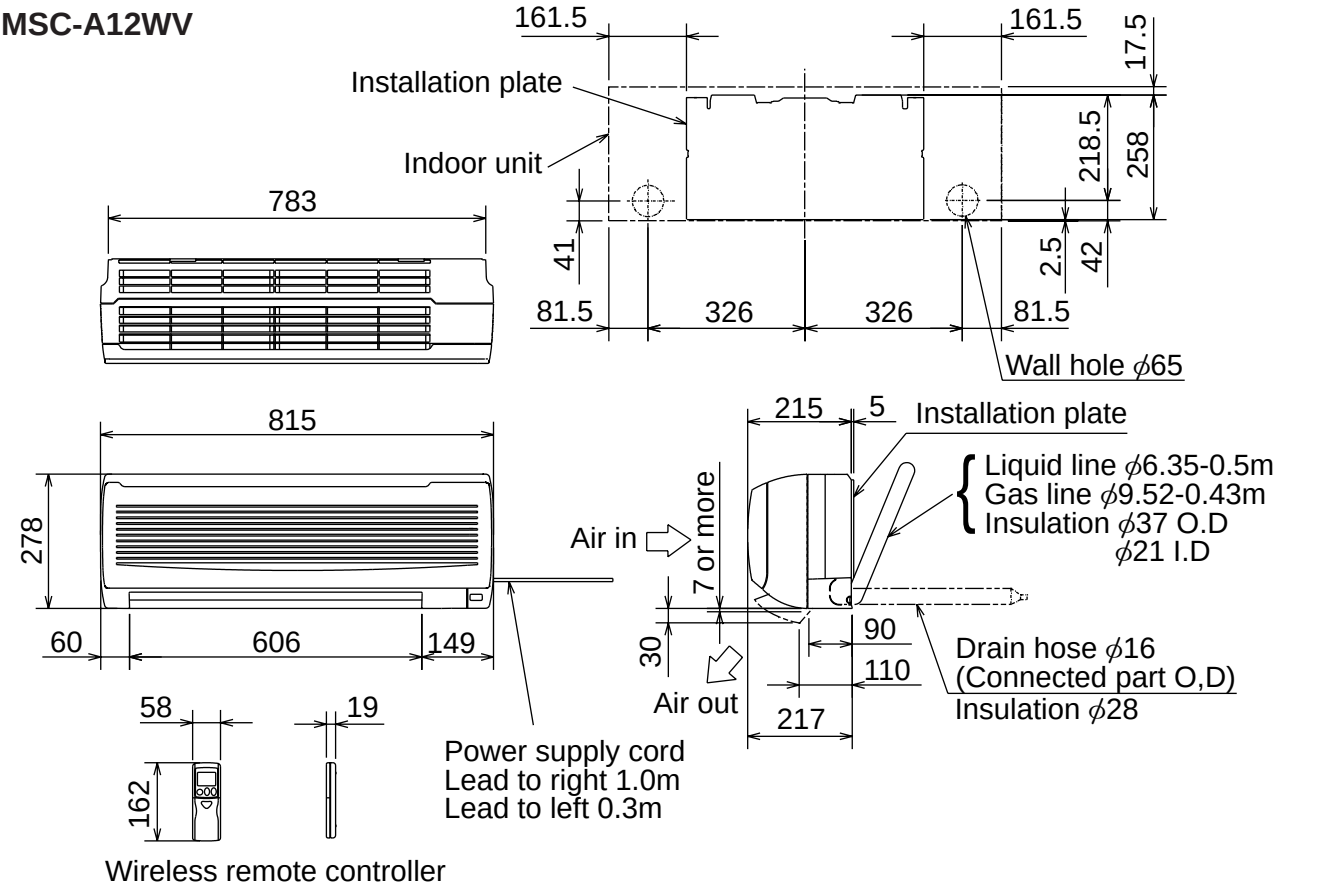

C.3.3.2 Inverter Heat Pump

Unit : mm

OUTDOOR UNIT

MXZ-A18WV

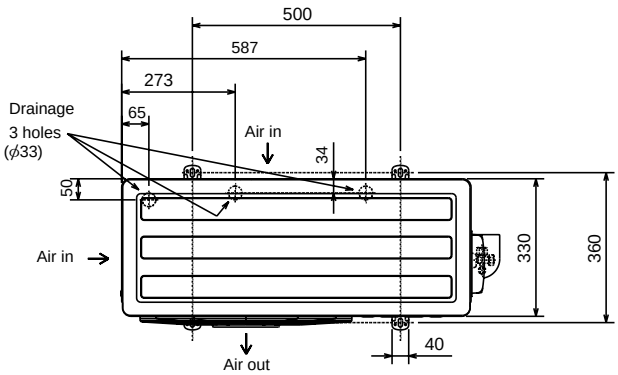

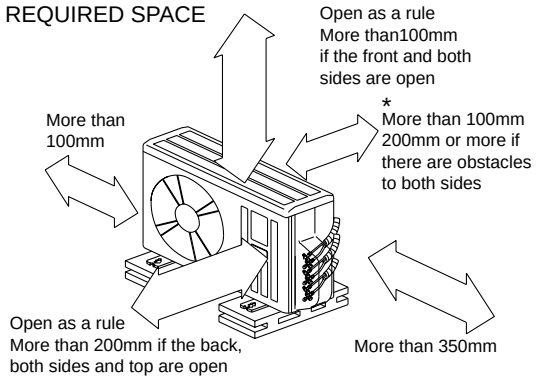

* Note:
The dimensions given along the arrrows above are required to guarantee the air conditioner's performance. Install the unit in as wide a place as possible for later service or repairs.

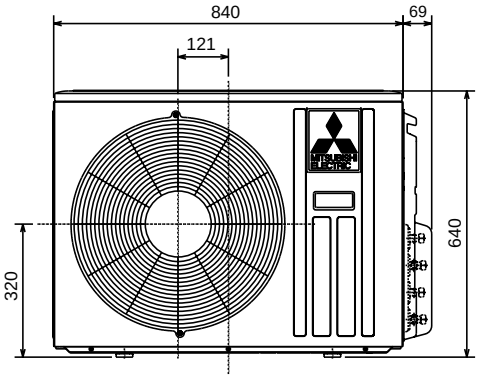

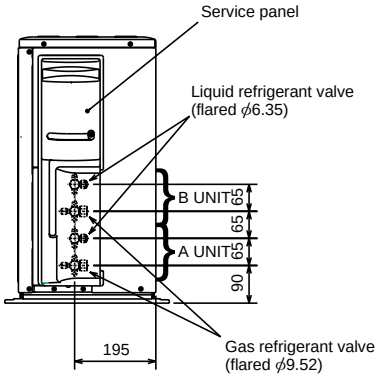

OUTDOOR UNIT

Unit : mm

MXZ-A26WV

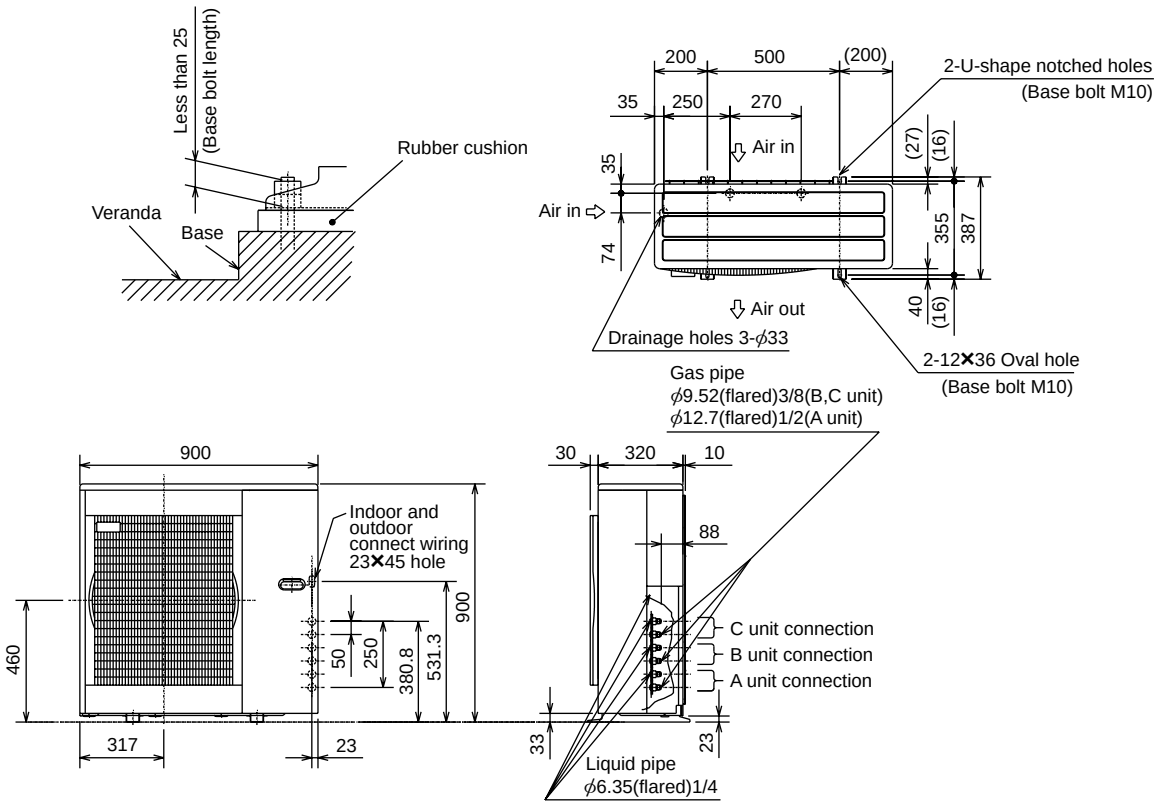

1.Installation space

Note : Leave front and both sides clearance fully.

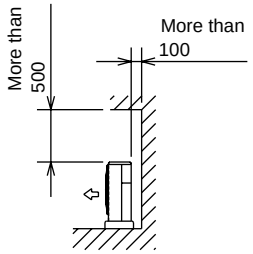

Note : Leave front and overhead clearance fully.

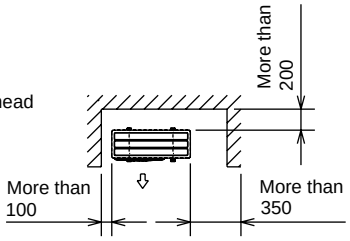

Note : Leave front, overhead and both sides clearance fully.

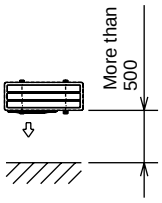

2.Service space

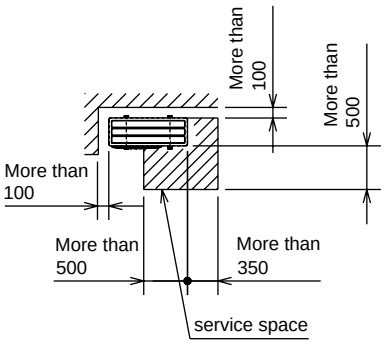

OUTDOOR UNIT

Unit : mm

MXZ-A32WV

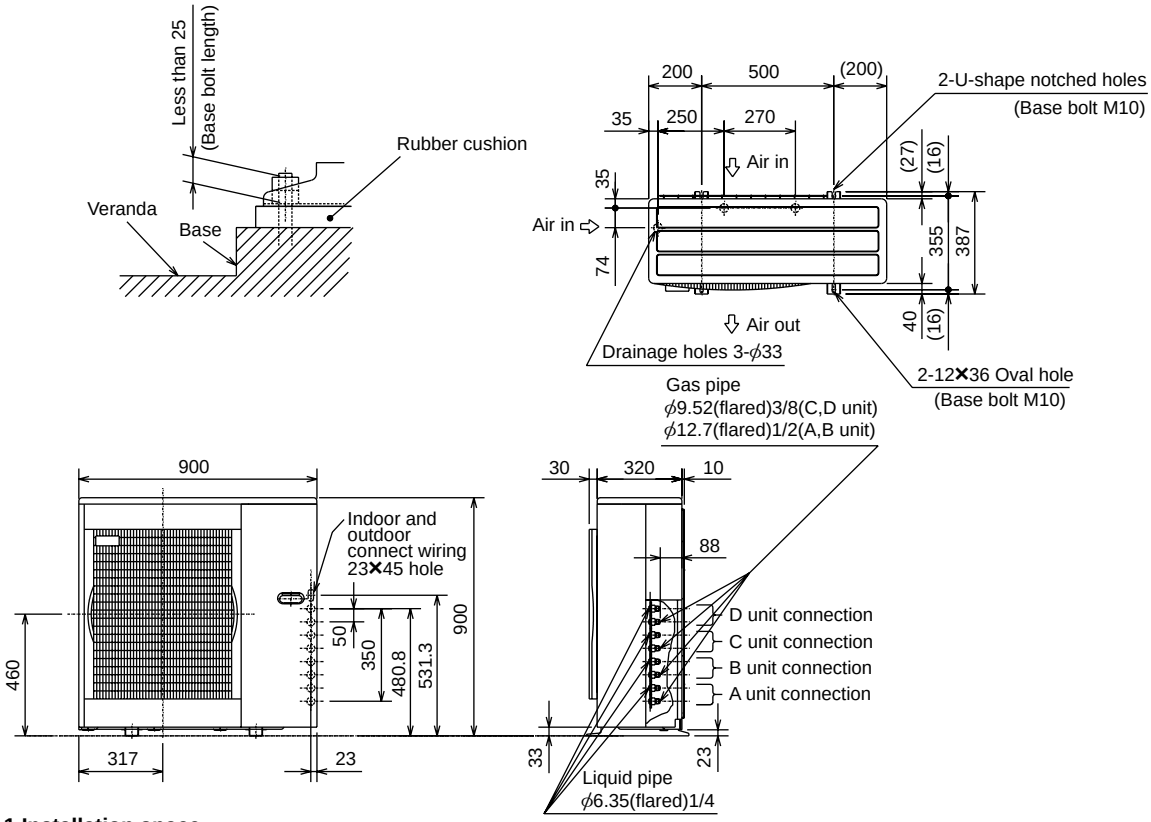

1.Installation space

Note : Leave front and both sides clearance fully.

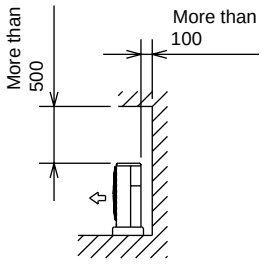

Note : Leave front and overhead clearance fully.

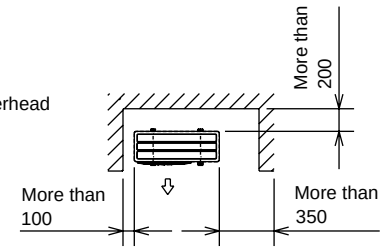

Note : Leave front, overhead and both sides clearance fully.

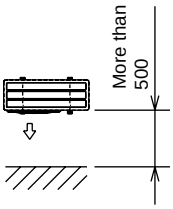

2.Service space

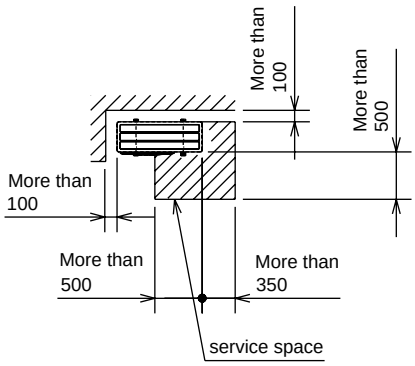

C.3.4 WIRING DIAGRAM

C.3.4.1 Cool Only

MUX-A10WV

OUTDOOR UNIT

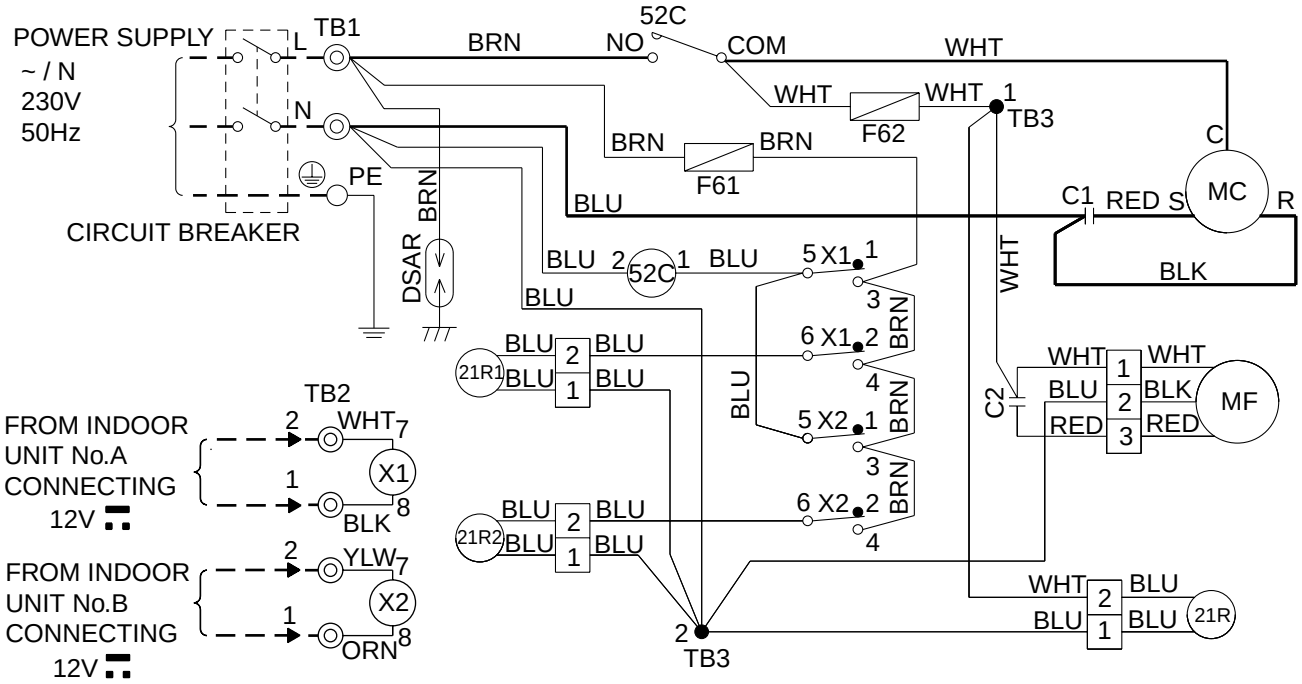

SYMBOL	NAME	SYMBOL	NAME	SYMBOL	NAME
C1	COMPRESSOR CAPACITOR	MF	OUTDOOR FAN MOTOR(INNER FUSE)	21R1	SOLENOID COIL(A)
C2	OUTDOOR FAN CAPACITOR	TB1,TB2,TB3	TERMINAL BLOCK	21R2	SOLENOID COIL(B)
DSAR	SURGE ABSORBER	X1	RELAY(A)	52C	COMPRESSOR CONTACTOR
F61,F62	FUSE(2A)	X2	RELAY(B)		
MC	COMPRESSOR(INNER PROTECTOR)	21R	SOLENOID COIL		

NOTE:1. About the indoor side electric wiring refer to the indoor unit electric wiring diagram for servicing.
2. Use copper conductors only. (For field wiring)
3. Symbols below indicate.
◎: Terminal block, □□□□: Connector

VG79B203H01

MUX-A19WV
MUX-A25WV

OUTDOOR UNIT

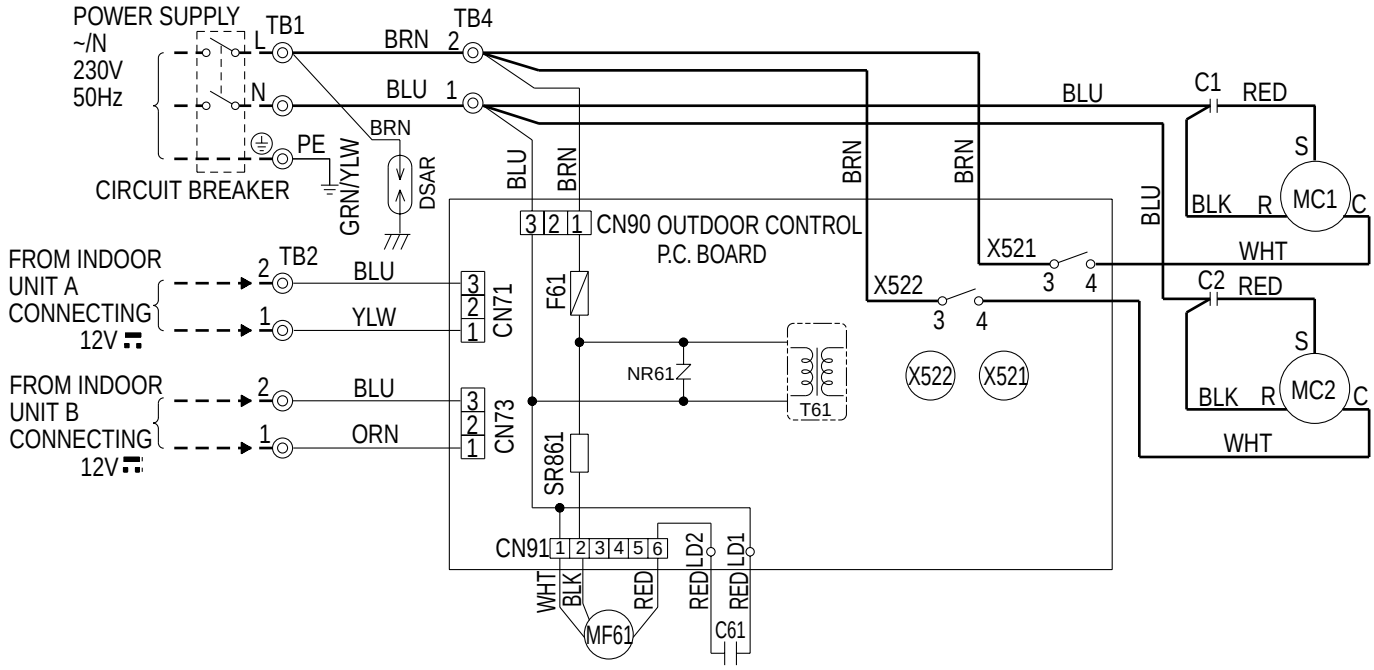

SYMBOL	NAME	SYMBOL	NAME	SYMBOL	NAME
C1	COMPRESSOR CAPACITOR(MC1)	MC1	COMPRESSOR(INNER PROTECTOR)	TB1	TERMINAL BLOCK
C2	COMPRESSOR CAPACITOR(MC2)	MC2	COMPRESSOR(INNER PROTECTOR)	TB2~TB4	TERMINAL BLOCK
C61	OUTDOOR FAN CAPACITOR	MF61	OUTDOOR FAN MOTOR (INNER PROTECTOR)	T61	TRANSFORMER
DSAR	SURGE ABSORBER	NR61	SURGE ABSORBER	X521	COMPRESSOR CONTACTOR(MC1)
F61	FUSE(3.15A)	SR861	OUTDOOR FAN RELAY	X522	COMPRESSOR CONTACTOR(MC2)

VG79B200H02

NOTE:1. About the indoor side electric wiring refer to the indoor unit electric wiring diagram for servicing.
2. Use copper conductors only. (For field wiring)
3. Symbols below indicate.
◎: Terminal block, □□□□: Connector

MUX-A20WV

OUTDOOR UNIT

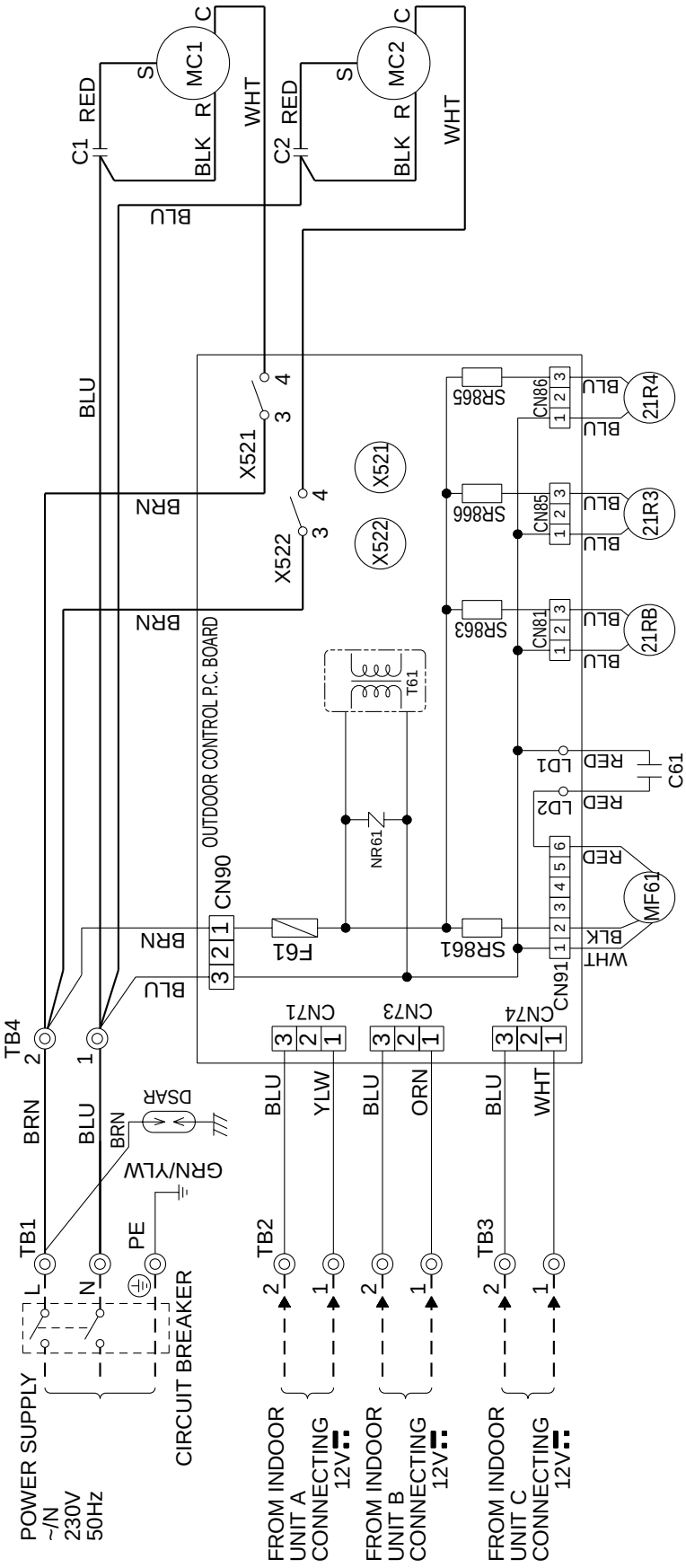

SYMBOL	NAME	SYMBOL	NAME	SYMBOL	NAME
C1	COMPRESSOR CAPACITOR(MC1)	MF61	OUTDOOR FAN MOTOR(INNER PROTECTOR)	TB2~TB4	TERMINAL BLOCK
C2	COMPRESSOR CAPACITOR(MC2)	NR61	SURGE ABSORBER	T61	TRANSFORMER
C61	OUTDOOR FAN CAPACITOR	SR861	OUTDOOR FAN RELAY	X521	COMPRESSOR CONTACTOR(MC1)
DSAR	SURGE ABSORBER	SR863	RELAY (21RB)	X522	COMPRESSOR CONTACTOR(MC2)
F61	FUSE(3.15A)	SR865	RELAY (C) (21R4)	21RB	SOLENOID COIL
MC1	COMPRESSOR(INNER PROTECTOR)	SR866	RELAY (B) (21R3)	21R3	SOLENOID COIL (B)
MC2	COMPRESSOR(INNER PROTECTOR)	TB1	TERMINAL BLOCK	21R4	SOLENOID COIL (C)

NOTE:1. About the indoor side electric wiring refer to the indoor unit electric wiring diagram for servicing.
2. Use copper conductors only. (For field wiring)
3. Symbols below indicate.
◎: Terminal block, □□□□ : Connector

VG79B201H02

MUX-A22WV

OUTDOOR UNIT

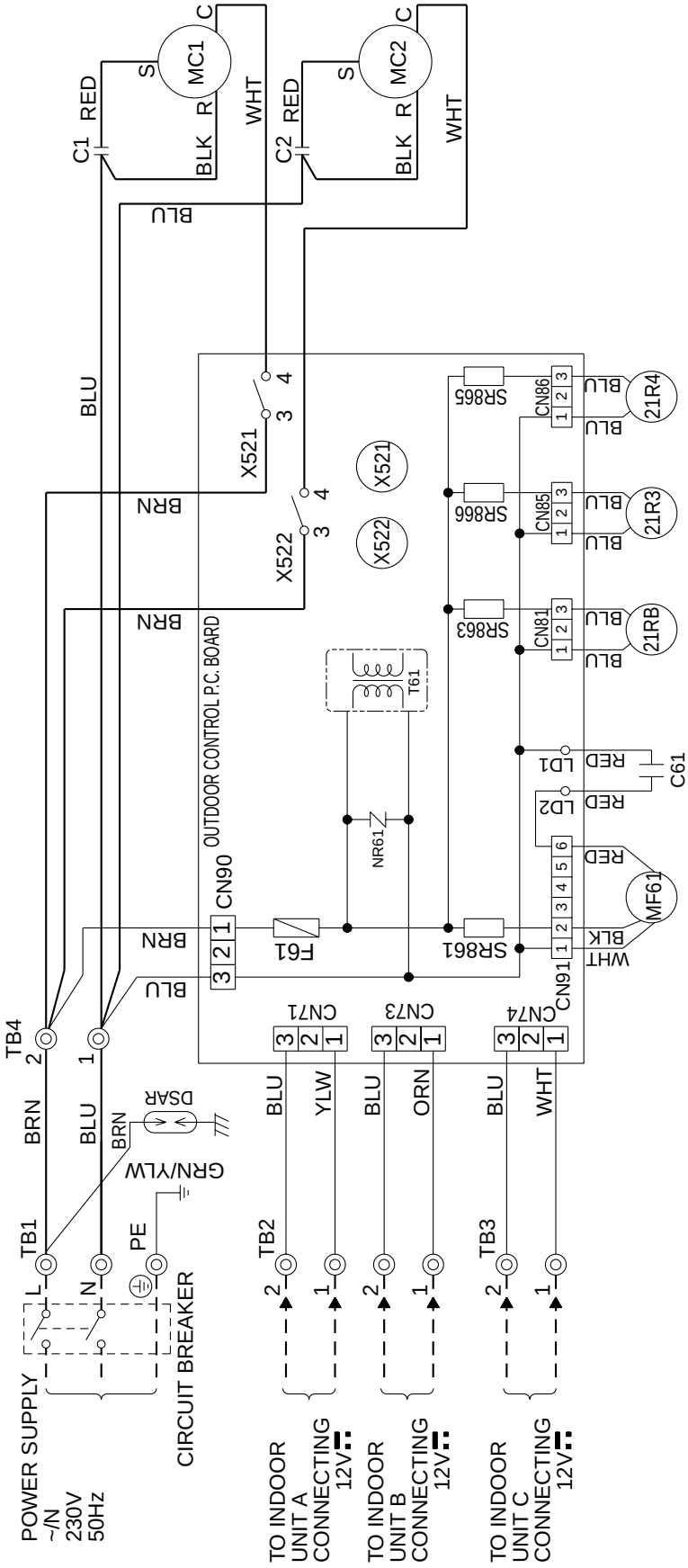

SYMBOL	NAME	SYMBOL	NAME	SYMBOL	NAME
C1	COMPRESSOR CAPACITOR(MC1)	MF61	OUTDOOR FAN MOTOR(INNER PROTECTOR)	TB2~TB4	TERMINAL BLOCK
C2	COMPRESSOR CAPACITOR(MC2)	NR61	SURGE ABSORBER	T61	TRANSFORMER
C61	OUTDOOR FAN CAPACITOR	SR861	OUTDOOR FAN RELAY	X521	COMPRESSOR CONTACTOR(MC1)
DSAR	SURGE ABSORBER	SR863	RELAY (21RB)	X522	COMPRESSOR CONTACTOR(MC2)
F61	FUSE(3.15A)	SR865	RELAY (C) (21R4)	21RB	SOLENOID COIL
MC1	COMPRESSOR(INNER PROTECTOR)	SR866	RELAY (B) (21R3)	21R3	SOLENOID COIL (B)
MC2	COMPRESSOR(INNER PROTECTOR)	TB1	TERMINAL BLOCK	21R4	SOLENOID COIL (C)

NOTE:1. About the indoor side electric wiring refer to the indoor unit electric wiring diagram for servicing.
2. Use copper conductors only. (For field wiring)
3. Symbols below indicate.
◎: Terminal block, □□□□ : Connector

VG79B520H01

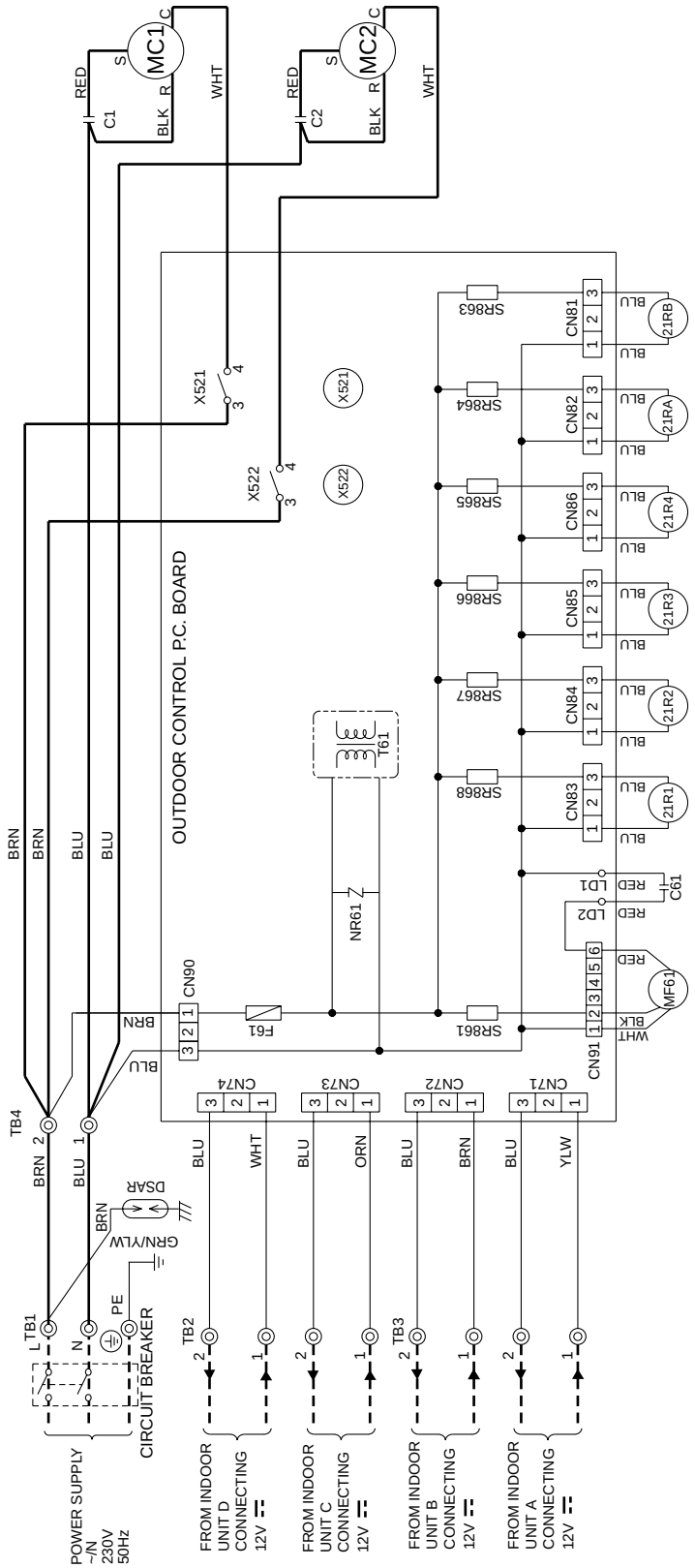

SYMBOL	NAME	SYMBOL	NAME	SYMBOL	NAME
C1	COMPRESSOR CAPACITOR(MC1)	SR861	OUTDOOR FAN RELAY	X521	COMPRESSOR CONTACTOR(MC1)
C2	COMPRESSOR CAPACITOR(MC2)	SR863	RELAY (21RB)	X522	COMPRESSOR CONTACTOR(MC2)
C61	OUTDOOR FAN CAPACITOR	SR864	RELAY (21RA)	21RA	SOLENOID COIL (BALANCE)
DSAR	SURGE ABSORBER	SR865	RELAY (D) (21R4)	21RB	SOLENOID COIL (BALANCE)
F61	FUSE(3.15A)	SR866	RELAY (C) (21R3)	21R1	SOLENOID COIL (A)
MC1	COMPRESSOR(INNER PROTECTOR)	SR867	RELAY (B) (21R2)	21R2	SOLENOID COIL (B)
MC2	COMPRESSOR(INNER PROTECTOR)	SR868	RELAY (A) (21R1)	21R3	SOLENOID COIL (C)
MF61	OUTDOOR FAN MOTOR(INNER PROTECTOR)	TB1~TB4	TERMINAL BLOCK	21R4	SOLENOID COIL (D)
NR61	SURGE ABSORBER	T61	TRANSFORMER		

NOTE:1. About the indoor side electric wiring refer to the indoor unit electric wiring diagram for servicing.
2. Use copper conductors only. (For field wiring)
3. Symbols below indicate.
◎: Terminal block, □□□ : Connector

VG79B198H03

MUX-A26WV

OUTDOOR UNIT

MSC-A07WV MSC-A09WV MSC-A12WV

INDOOR UNIT

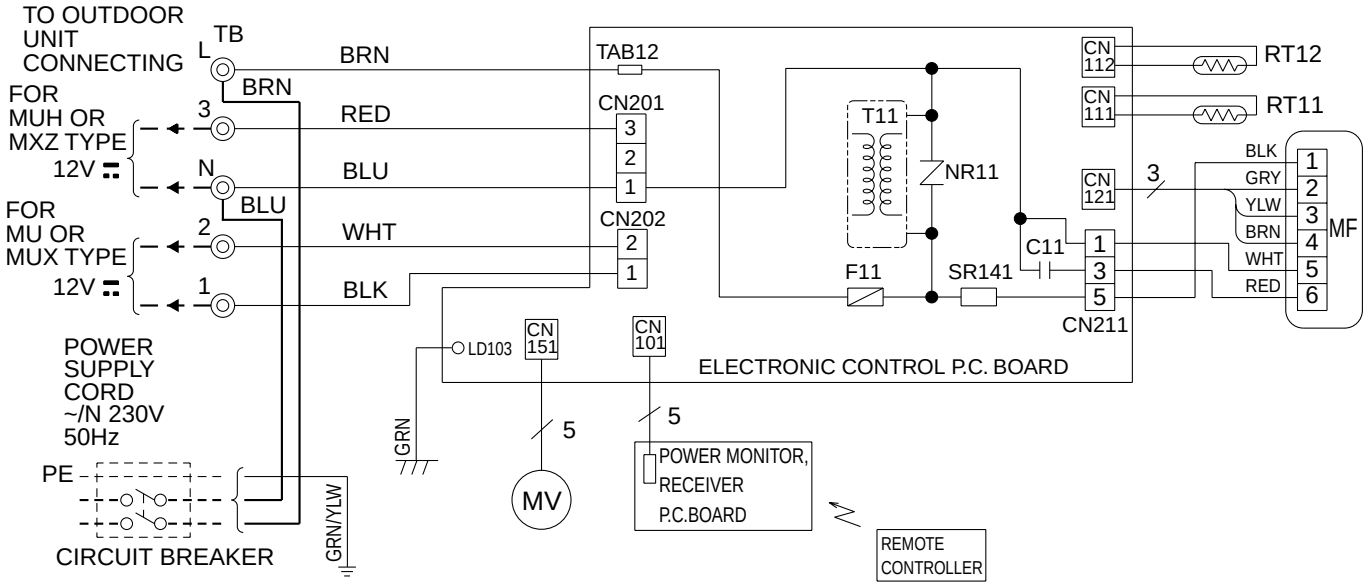

SYMBOL	NAME	SYMBOL	NAME	SYMBOL	NAME
C11	INDOOR FAN CAPACITOR	NR11	VARISTOR	TB	TERMINAL BLOCK
F11	FUSE(3.15A)	RT11	ROOM TEMPERATURE THERMISTOR	T11	TRANSFORMER
MF	INDOOR FAN MOTOR (INNER FUSE)	RT12	INDOOR COIL THERMISTOR		
MV	VANE MOTOR	SR141	SOLID STATE RELAY		

NOTE:1. About the indoor side electric wiring refer to the indoor unit electric wiring diagram for servicing.
2. Use copper conductors only. (For field wiring)
3. Symbols below indicate.
◎: Terminal block, □□□□: Connector

SG79J617H01

C.3.4.2 Inverter Heat Pump

MXZ-A18WV

OUTDOOR UNIT

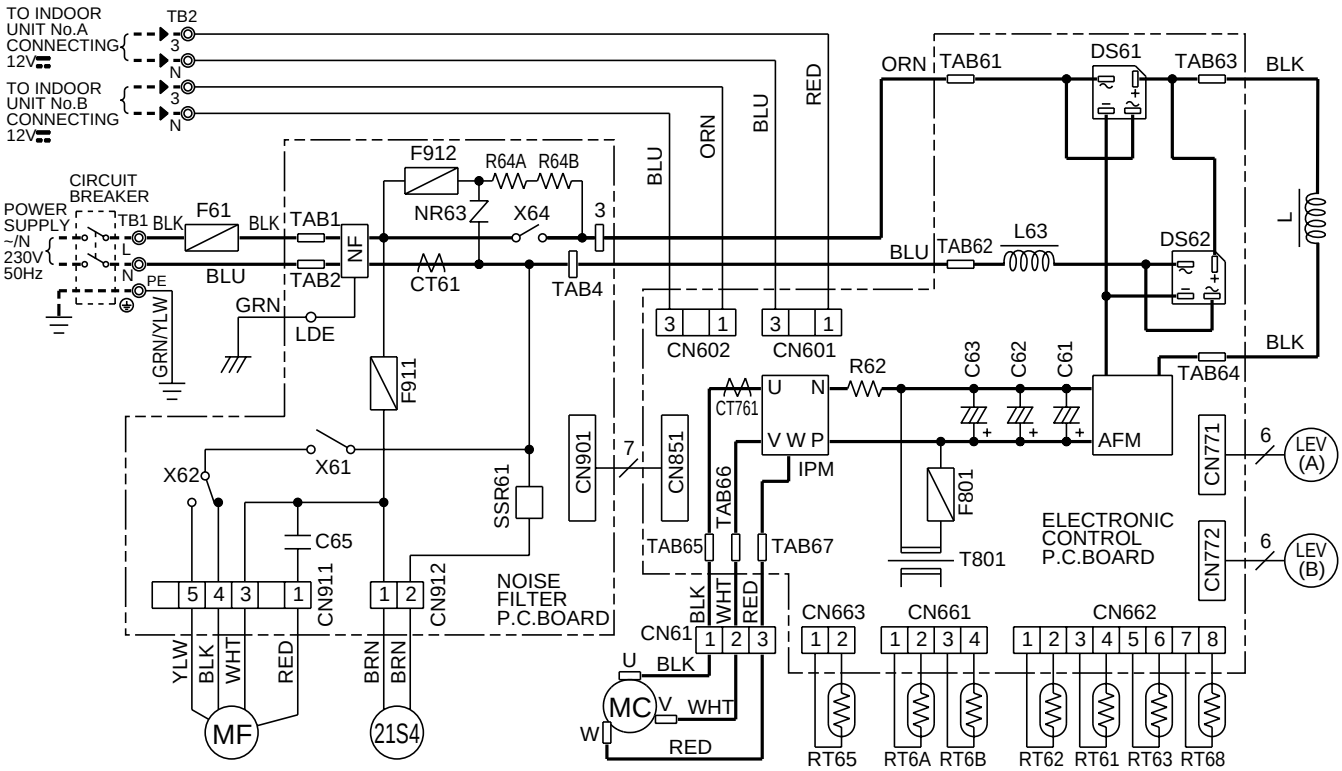

SYMBOL	NAME	SYMBOL	NAME	SYMBOL	NAME
AFM	ACTIVE FILTER MODULE	LEV(A)	EXPANSION VALVE A,COIL	R64A	RESISTOR
CT61	CURRENT TRANSFORMER	LEV(B)	EXPANSION VALVE B,COIL	R64B	RESISTOR
CT761	CURRENT TRANSFORMER	L63	NORMAL MODE CHOKE COIL	SSR61	SOLENOID COIL RELAY
C61	SMOOTHING CAPACITOR	MC	COMPRESSOR	TB1	TERMINAL BLOCK
C62	SMOOTHING CAPACITOR	MF	OUTDOOR FAN MOTOR	TB2	TERMINAL BLOCK
C63	SMOOTHING CAPACITOR	NF	NOISE FILTER	T801	TRANSFORMER
C65	OUTDOOR FAN CAPACITOR	NR63	VARISTOR	X61	FAN MOTOR RELAY
DS61	DIODE MODULE	RT6A	GAS PIPE TEMPERATURE A THERMISTOR	X62	FAN MOTOR RELAY
DS62	DIODE MODULE	RT6B	GAS PIPE TEMPERATURE B THERMISTOR	X64	RELAY
F61	FUSE(20A)	RT61	DISCHARGE TEMPERATURE THERMISTOR	21S4	R.V. COIL
F801	FUSE(1A)	RT62	DEFROST THERMISTOR		
F911	FUSE(1A)	RT63	EVAPORATOR TEMPERATURE THERMISTOR		
F912	FUSE(3.15A)	RT65	FIN TEMPERATURE THERMISTOR		
IPM	POWER TRANSISTOR MODULE	RT68	HIGH-PRESSURE PROTECT THERMISTOR		
L	REACTOR	R62	RESISTOR		

NOTES 1.About the indoor side electric wiring refer to the indoor unit electric wiring diagram for servicing.
2.Use copper conductors only(for field wiring).
3.Symbols below indicate.
◎:Terminal block ☐☐☐:Connector

SG79J614H02

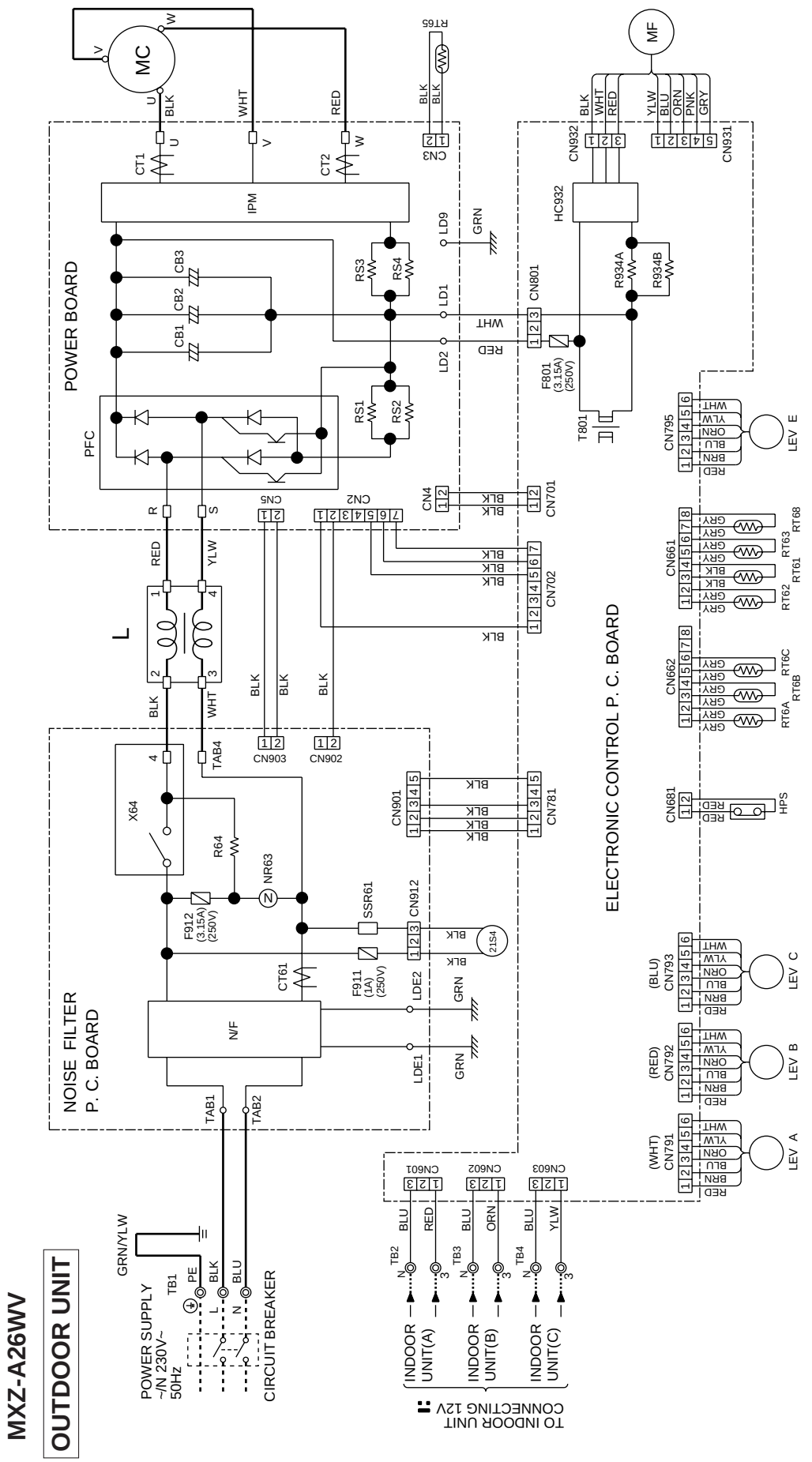

SYMBOL	NAME	SYMBOL	NAME	SYMBOL	NAME
CB1~3	SMOOTHING CAPACITOR	LEV E	EXPANSION VALVE	RT62	DEFROST THERMISTOR
CT1, 2	CURRENT TRANSFORMER	MC	COMPRESSOR	RT63	EVAPORATION TEMPERATURE THERMISTOR
CT61	CURRENT TRANSFORMER	MF	OUTDOOR FAN MOTOR (INNER FUSE)	RT65	FIN TEMPERATURE THERMISTOR
F801	FUSE (3.15A) (250V)	NR63	VARISTOR	RT68	OUTDOOR HEAT EXCHANGER TEMPERATURE THERMISTOR
F911	FUSE (1A) (250V)	N/F	NOISE FILTER		
F912	FUSE (3.15A) (250V)	PFC	POWER FACTOR CONTROLLER	SSR61	SOLENOID COIL RELAY
HC932	FET ARRAY	R64	RESISTOR	T801	TRANSFORMER
HPS	HIGH PRESSURE SWITCH	R934A, B	RESISTOR	TB1~4	TERMINAL BLOCK
IPM	POWER TRANSISTOR MODULE	RS1~4	RESISTOR	X64	RELAY
L	REACTOR	RT6A~C	GAS PIPE TEMPERATURE THERMISTOR	21S4	R.V. COIL
LEV A~C	EXPANSION VALVE	RT61	DISCHARGE TEMPERATURE THERMISTOR		

MXZ-A32WV

OUTDOOR UNIT

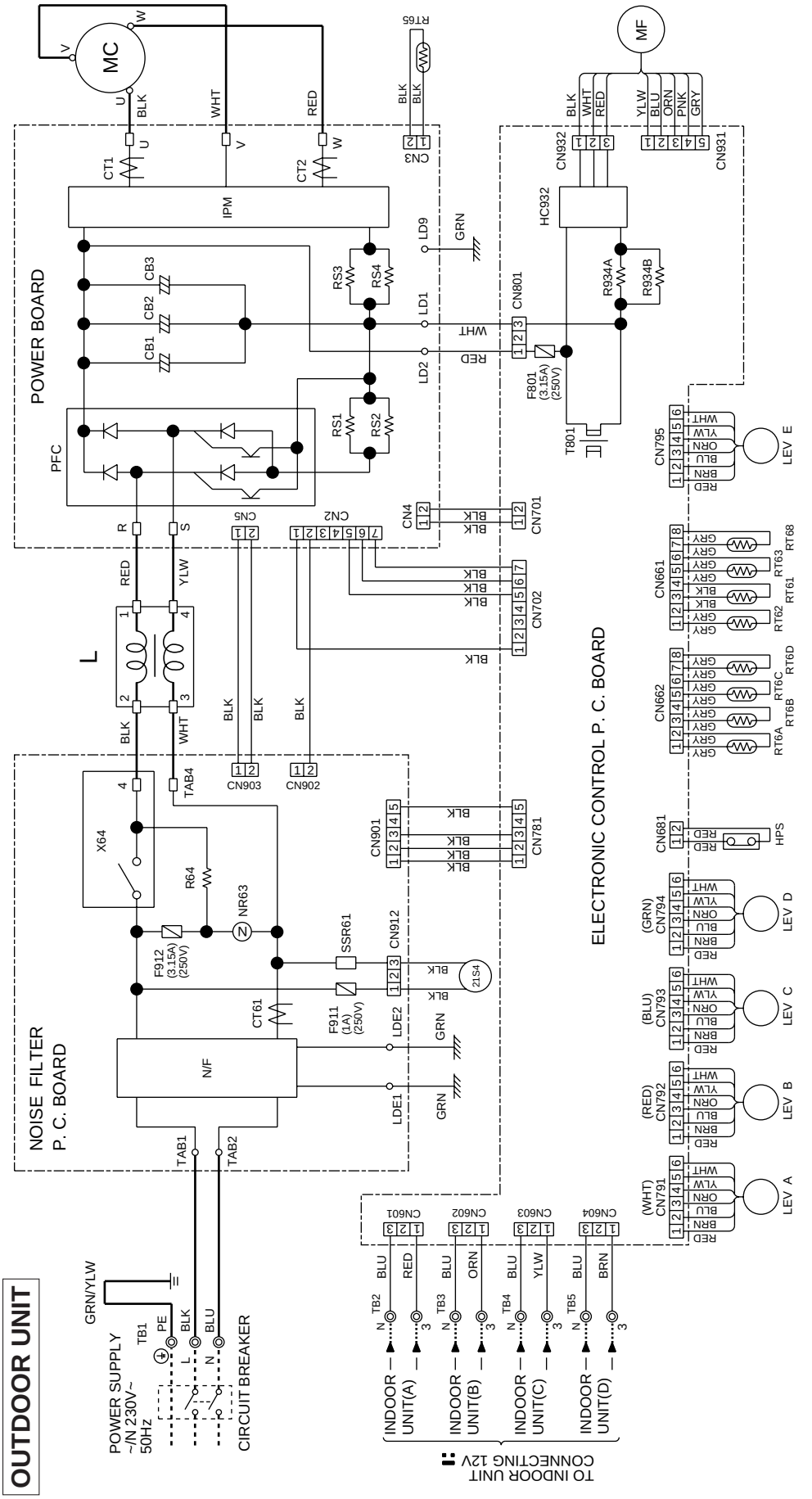

NOTES:
1. About the indoor side electric wiring refer to the indoor unit electric wiring diagram for servicing.
2. Use copper conductors only (for field wiring).
3. Symbols below indicate.
◎:Terminal block ▭:Connector

SG79Y270H01

SYMBOL	NAME	SYMBOL	NAME	SYMBOL	NAME
CB1~3	SMOOTHING CAPACITOR	LEV E	EXPANSION VALVE	RT62	DEFROST THERMISTOR
CT1, 2	CURRENT TRANSFORMER	MC	COMPRESSOR	RT63	EVAPORATION TEMPERATURE THERMISTOR
CT61	CURRENT TRANSFORMER	MF	OUTDOOR FAN MOTOR (INNER FUSE)	RT65	FIN TEMPERATURE THERMISTOR
F801	FUSE (3.15A) (250V)	NR63	VARISTOR	RT68	OUTDOOR HEAT EXCHANGER TEMPERATURE THERMISTOR
F911	FUSE (1A) (250V)	N/F	NOISE FILTER		
F912	FUSE (3.15A) (250V)	PFC	POWER FACTOR CONTROLLER	SSR61	SOLENOID COIL RELAY
HC932	FET ARRAY	R64	RESISTOR	T801	TRANSFORMER
HPS	HIGH PRESSURE SWITCH	R934A, B	RESISTOR	TB1~5	TERMINAL BLOCK
IPM	POWER TRANSISTOR MODULE	RS1~4	RESISTOR	X64	RELAY
L	REACTOR	RT6A~D	GAS PIPE TEMPERATURE THERMISTOR	21S4	R.V. COIL
LEV A~D	EXPANSION VALVE	RT61	DISCHARGE TEMPERATURE THERMISTOR		

C.3.5 REFRIGERANT SYSTEM DIAGRAM

C.3.5.1 Cool Only

Unit : mm

MSC-A07WV **MUX-A10WV**

INDOOR UNIT OUTDOOR UNIT

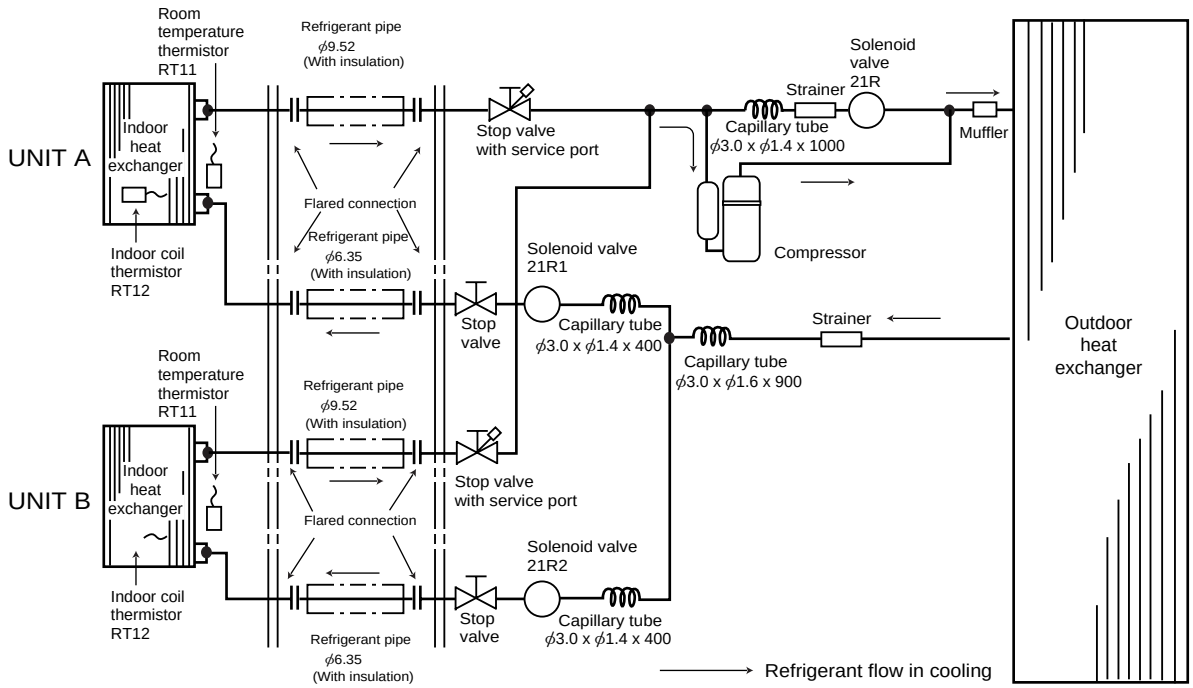

Refer to C-51for MSC-A07YV.

Unit : mm

MSC-A07WV
MSC-A12WV **MUX-A19WV**

INDOOR UNIT **OUTDOOR UNIT**

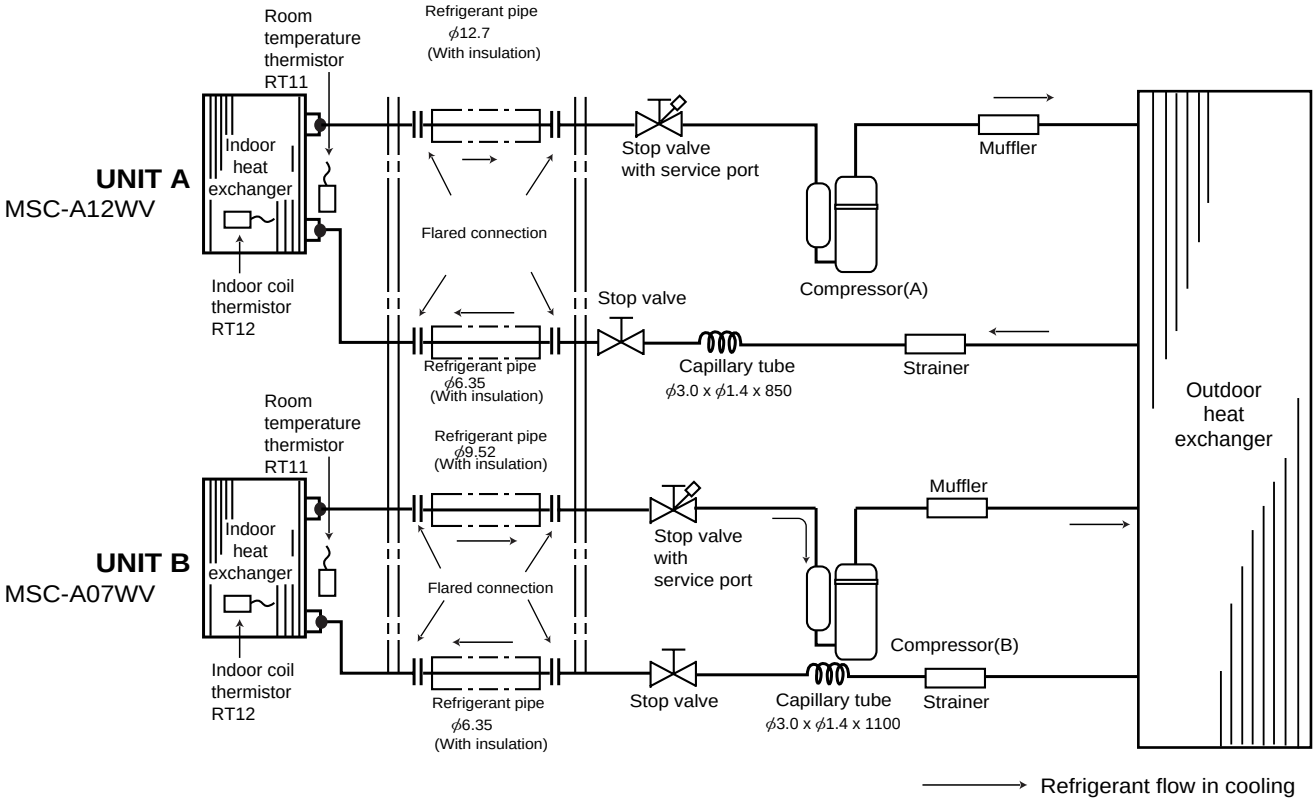

Refer to C-51 for MSC-A07YV.
Refer to C-51 for MSC-A12YV.

Unit : mm

MSC-A09WV **MUX-A20WV**

INDOOR UNIT **OUTDOOR UNIT**

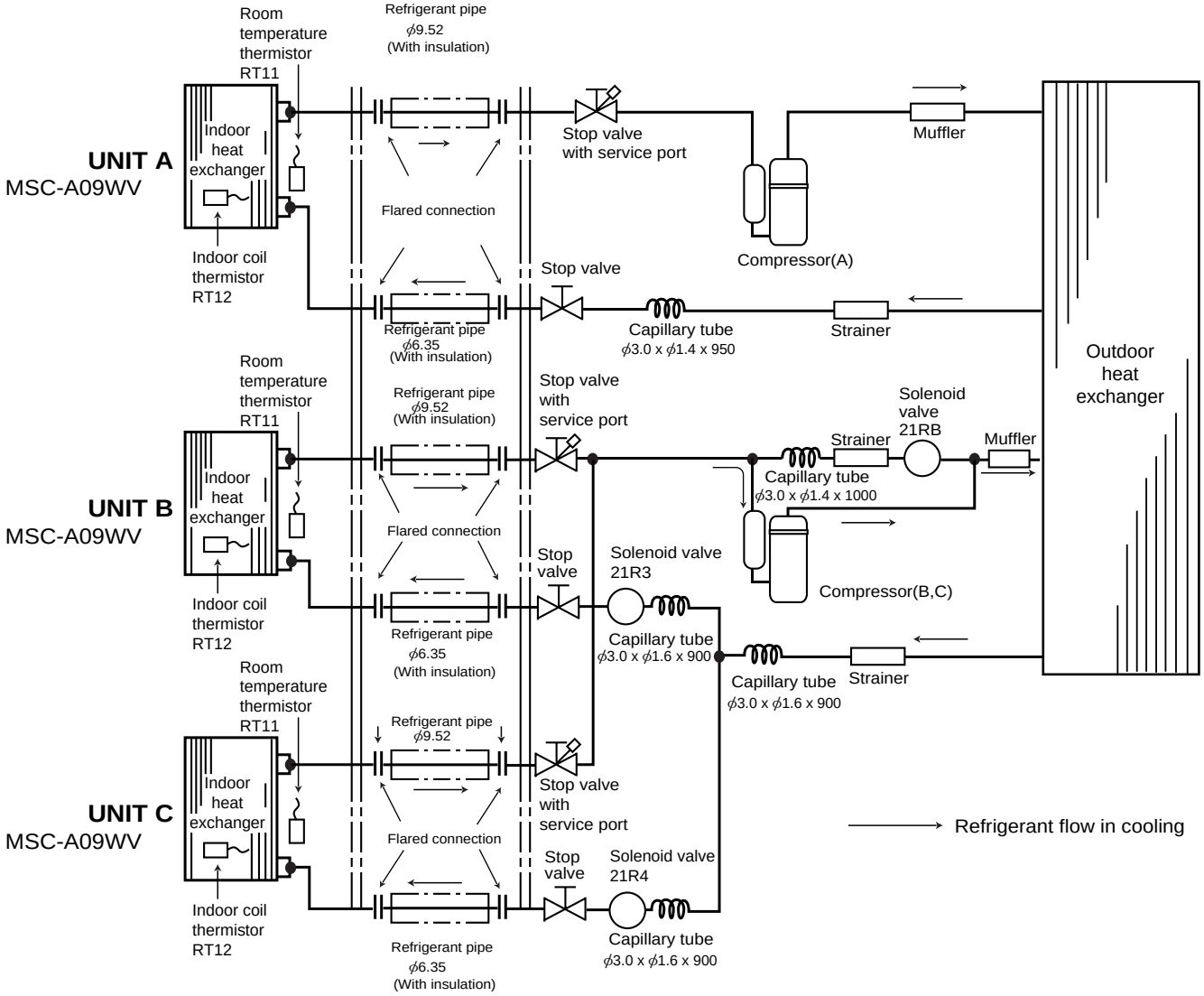

Refer to C-51 for MSC-A09YV.

Unit : mm

MSC-07WV
MSC-12WV

MUX-A22WV

INDOOR UNIT

OUTDOOR UNIT

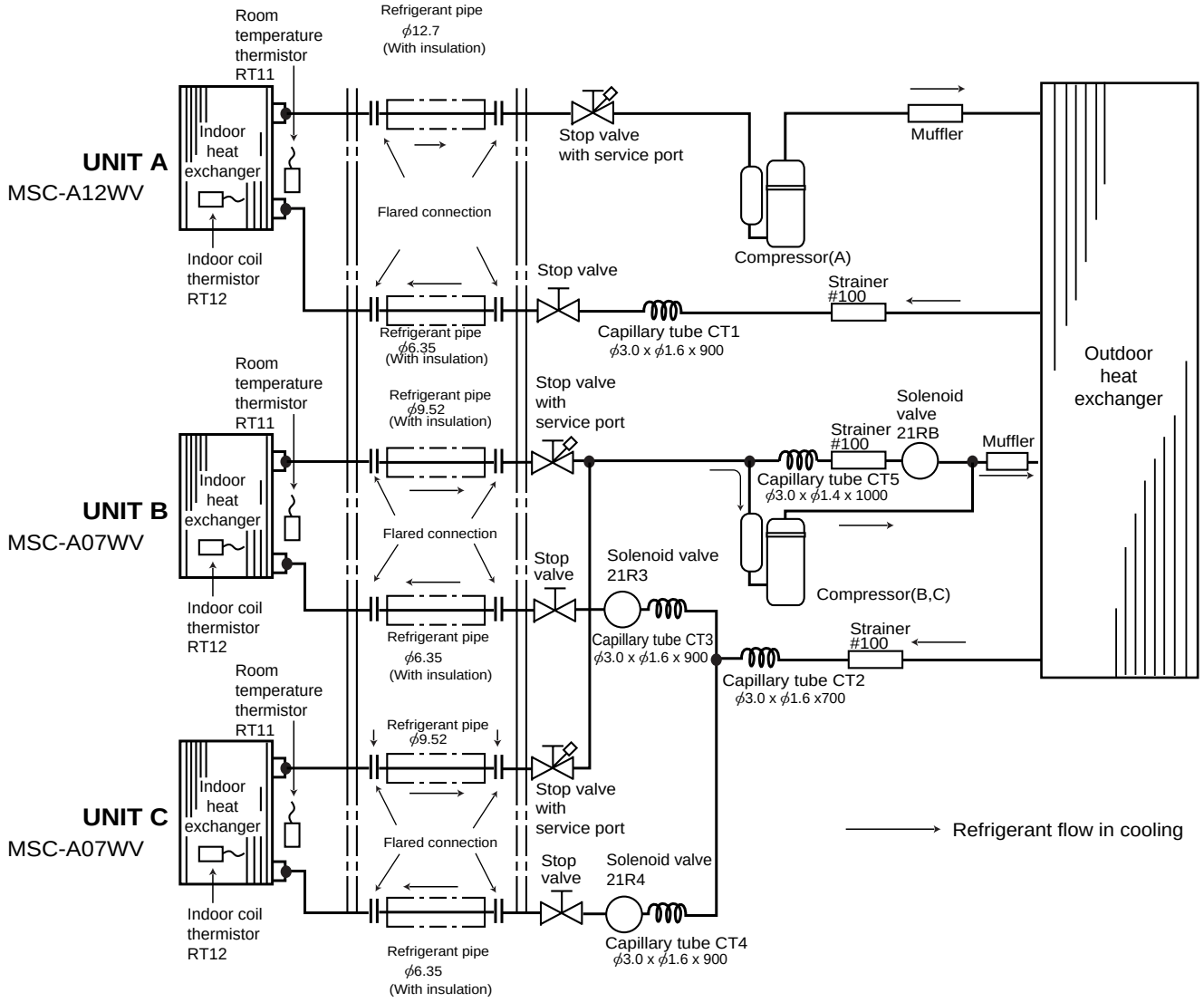

Refer to C-51 for MSC-07YV.
Refer to C-51 for MSC-12YV.

Unit : mm

MSC-A12WV

INDOOR UNIT

MUX-A25WV

OUTDOOR UNIT

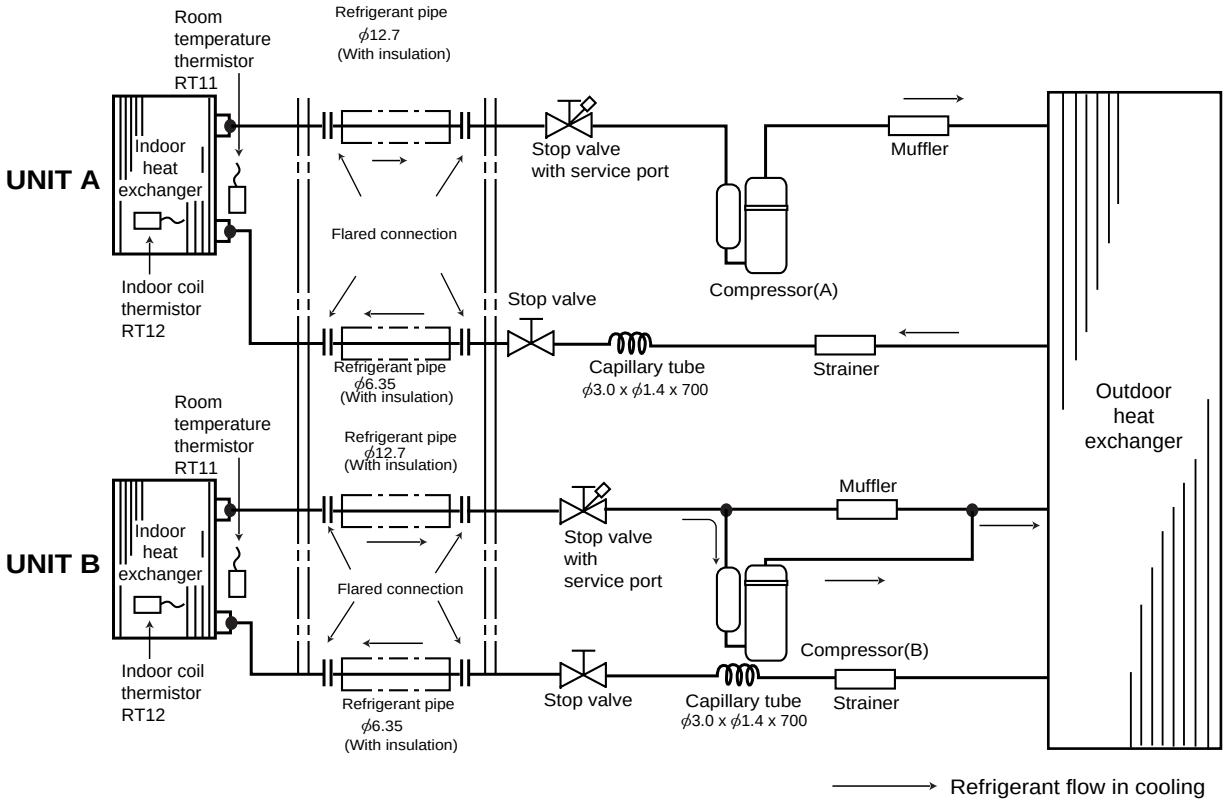

Refer to C-51 for MSC-12YV.

Unit : mm

MSC-A09WV
MSC-A12WV

MUX-A26WV

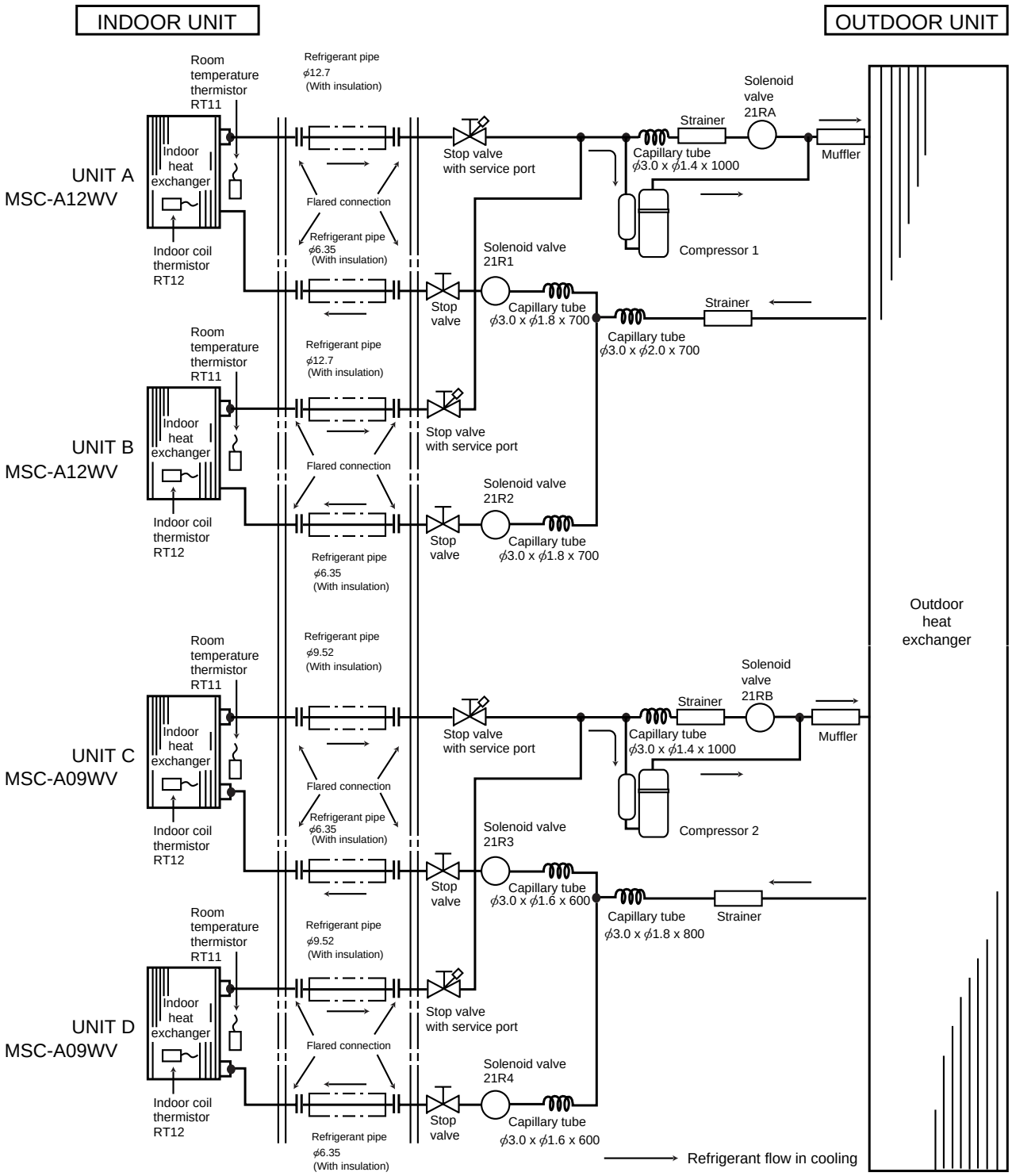

Refer to C-51 for MSC-A09YV.
Refer to C-51 for MSC-A12YV.

C.3.5.2 Inverter Heat Pump

Unit:mm

MXZ-A18WV

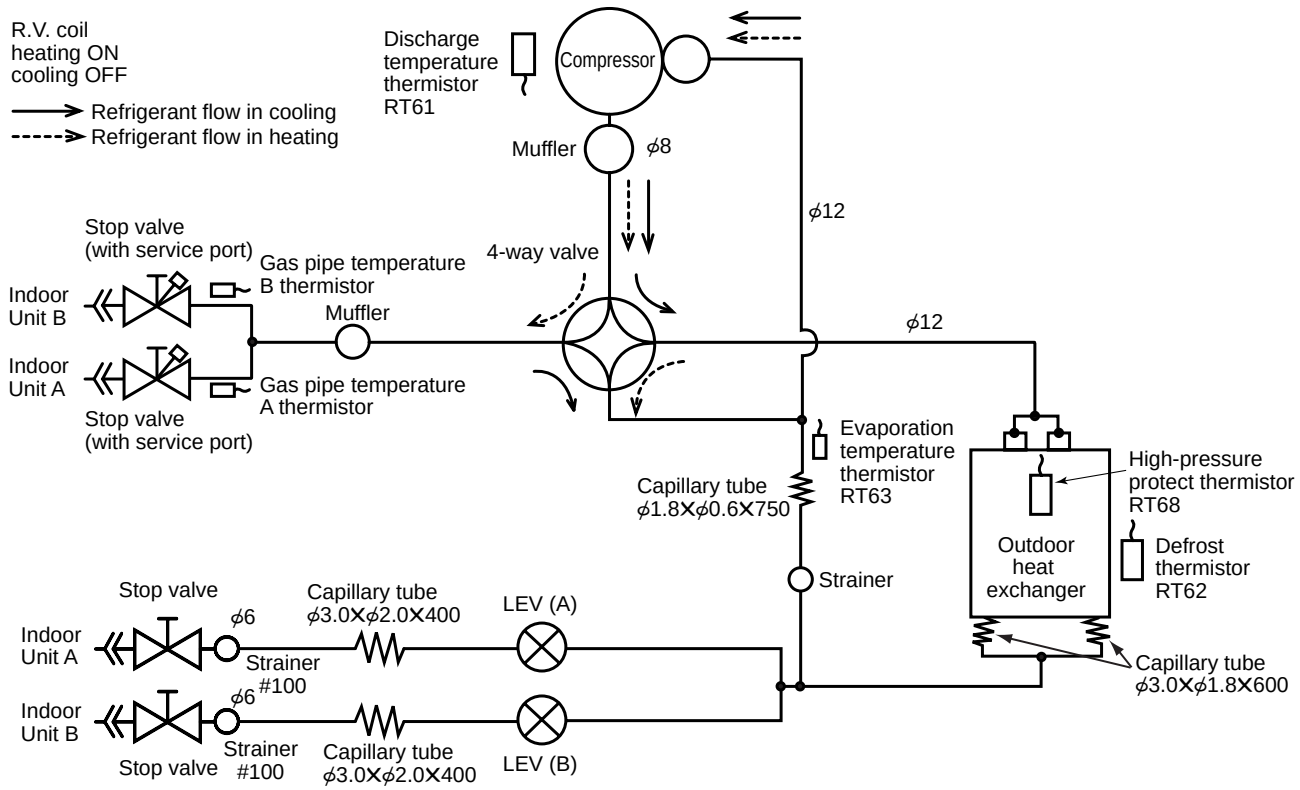

Unit:mm

MXZ-A26WV

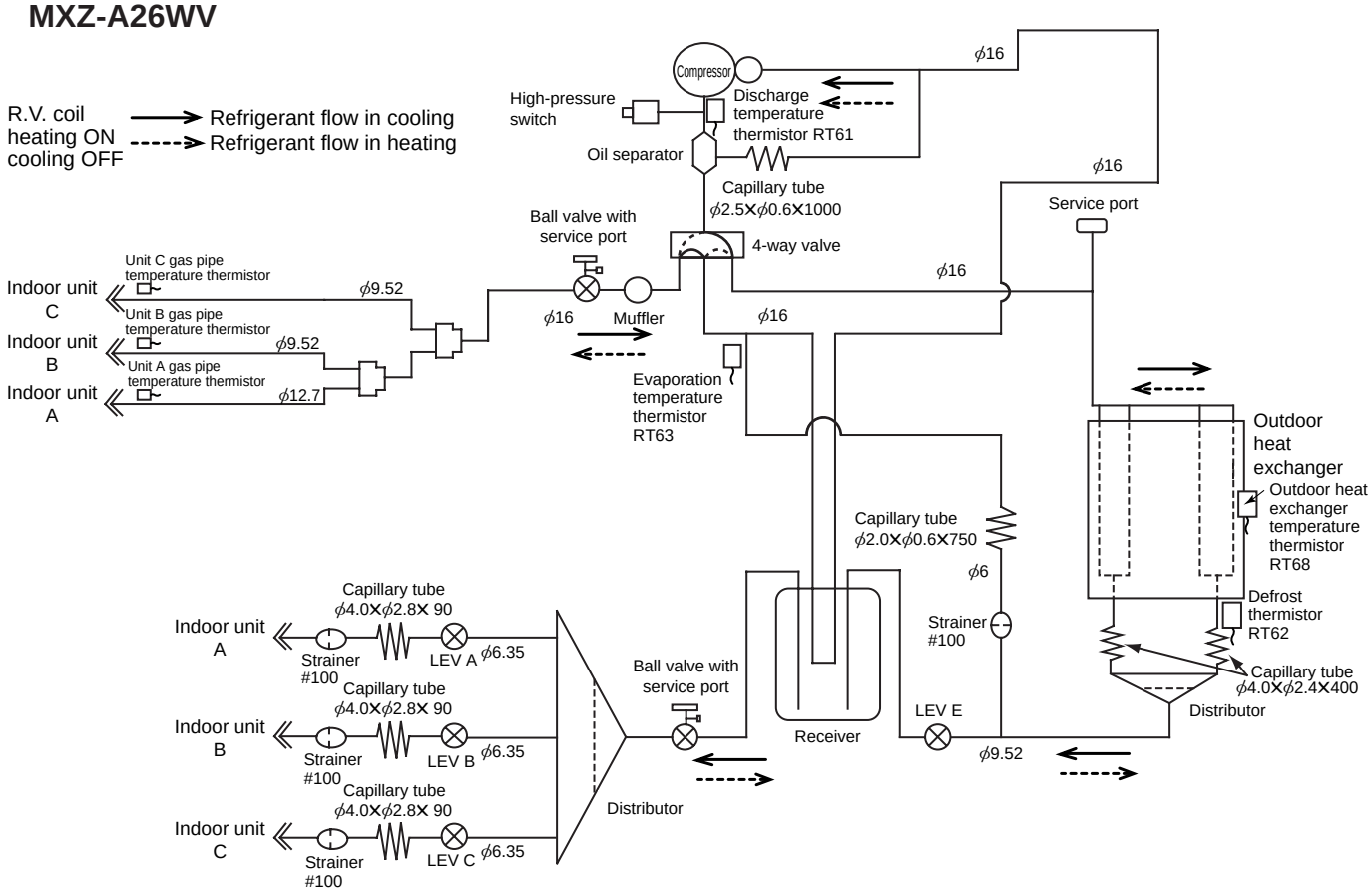

Unit:mm

MXZ-A32WV

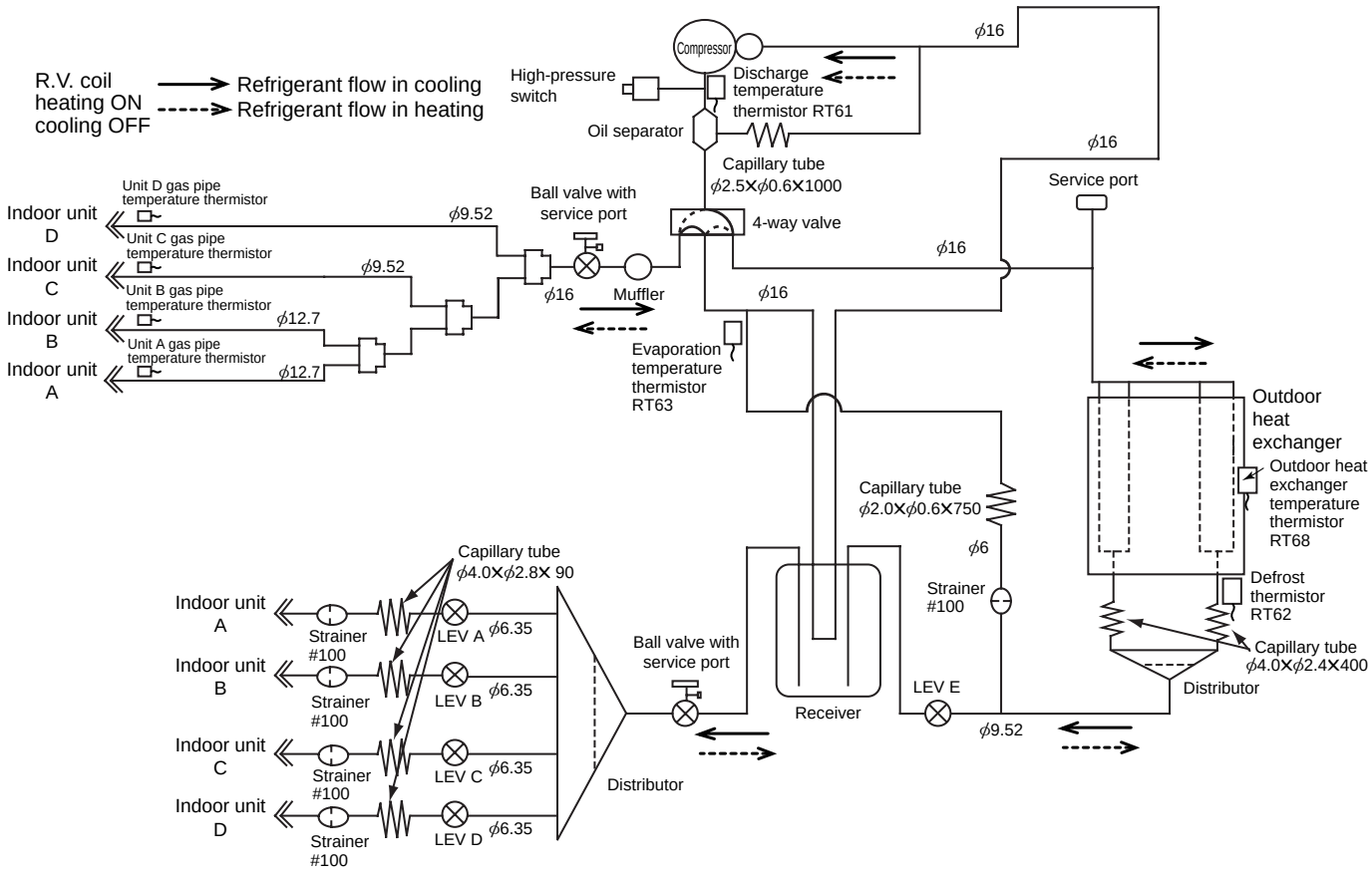

C.3.5.3 Refrigerabt Pipe Length and Pipe Size

MUX-A10WV

MAX. REFRIGERANT PIPING LENGTH & MAX. HEIGHT DIFFERENCE

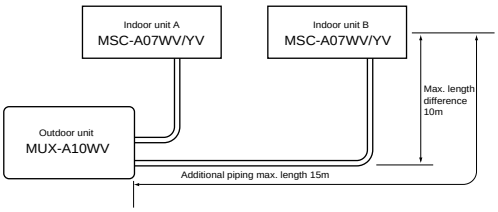

ADDITIONAL REFRIGERANT CHARGE (R410A:g)

UNIT No.	Outdoor unit precharged	Refrigerant piping length (one way)																					
		10 m	11 m	12 m	13 m	14 m	15 m	16 m	17 m	18 m	19 m	20 m	21 m	22 m	23 m	24 m	25 m	26 m	27 m	28 m	29 m	30 m
A unit + B unit	1000g	0	10	20	30	40	50	60	70	80	90	100	110	120	130	140	150	160	170	180	190	200

PIPING PREPARATION

① Table below shows the specifications of pipes commercially available.

UNIT No.	Pipe	Outside diameter mm	Insulation thickness	Insulation material
A and B UNIT	For liquid	6.35	8 mm	Heat resisting foam plastic 0.045 specific gravity
	For gas	9.52	8 mm	

② Ensure that the 2 refrigerant pipes are well insulated to prevent condensation.
③ Refrigerant bending radius must be 10cm or more.

MUX-A19WV

MAX.REFRIGERANT PIPING LENGTH & MAX. HEIGHT DIFFERENCE

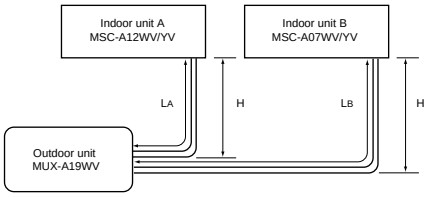

	UNIT No.	Pipe length		Height difference (H)	No. of bends
Max. limits	A	LA	15m	10m	10
	B	LB	15m	10m	10

ADDITIONAL REFRIGERANT CHARGE (R410A:g)

	Outdoor unit precharged	Refrigerant piping length (one way)								
A unit		7m	8m	9m	10m	11m	12m	13m	14m	15m
	1000g	0	20	40	60	80	100	120	140	160
	Outdoor unit precharged	Refrigerant piping length (one way,2 unit total)								
B unit		7m	8m	9m	10m	11m	12m	13m	14m	15m
	800g	0	20	40	60	80	100	120	140	160

PIPING PREPARATION

①Table below shows the specifications of pipes commercially available.

UNIT No.	Pipe	Outside diameter mm	Insulation thickness	Insulation material
A unit	For liquid	6.35	8mm	Heat resisting foam plastic 0.045 specific gravity
	For gas	12.7	8mm	
B unit	For liquid	6.35	8mm	
	For gas	9.52	8mm	

②Ensure that the 2 refrigerant pipes are well insulated to prevent condensation.
③Refrigerant bending radius must be 10cm or more.

MUX-A20WV

MAX.REFRIGERANT PIPING LENGTH & MAX. HEIGHT DIFFERENCE

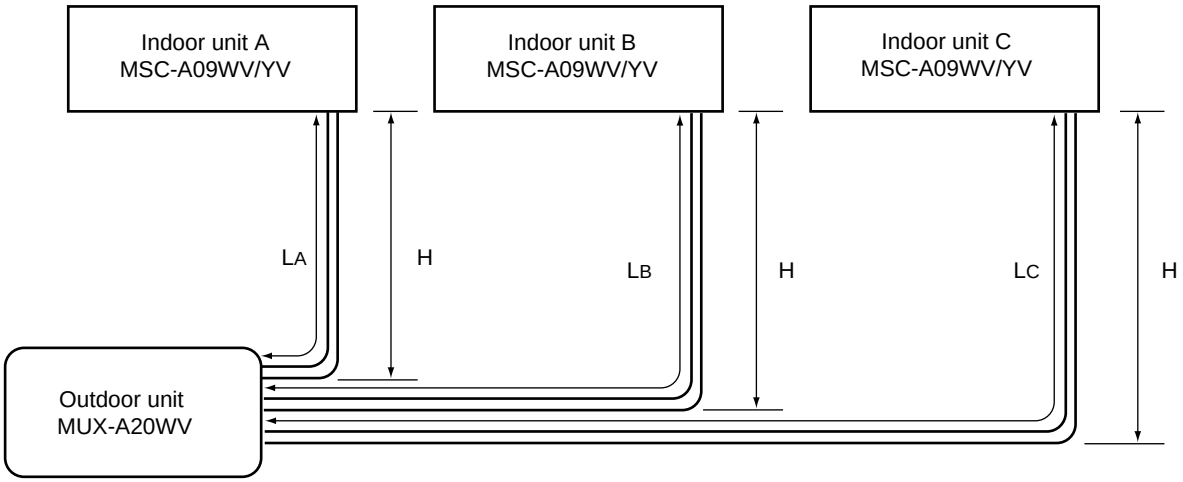

	UNIT No.	Pipe length				Height difference (H)	No. of bends	
Max. limits	A	LA	15m			10m	10	
	B	LB	15m	LB + LC	Total 30m	10m	10	Total 15
	C	LC	15m			10m	10	

ADDITIONAL REFRIGERANT CHARGE (R410A:g)

	Outdoor unit precharged	Refrigerant piping length (one way)								
A unit		7m	8m	9m	10m	11m	12m	13m	14m	15m
	800g	0	20	40	50	80	100	120	140	160

	Outdoor unit precharged	Refrigerant piping length (one way, 2 unit total)																				
B unit + C unit		10m	11m	12m	13m	14m	15m	16m	17m	18m	19m	20m	21m	22m	23m	24m	25m	26m	27m	28m	29m	30m
	1000g	0	10	20	30	40	50	60	70	80	90	100	110	120	130	140	150	160	170	180	190	200

PIPING PREPARATION

①Table below shows the specifications of pipes commercially available.

UNIT No.	Pipe	Outside diameter mm	Insulation thickness	Insulation material
A , B and C unit	For liquid	6.35	8mm	Heat resisting foam plastic 0.045 specific gravity
	For gas	9.52	8mm	

②Ensure that the 2 refrigerant pipes are well insulated to prevent condensation.

③Refrigerant bending radius must be 100mm or more.

MUX-A22WV

MAX.REFRIGERANT PIPING LENGTH & MAX. HEIGHT DIFFERENCE

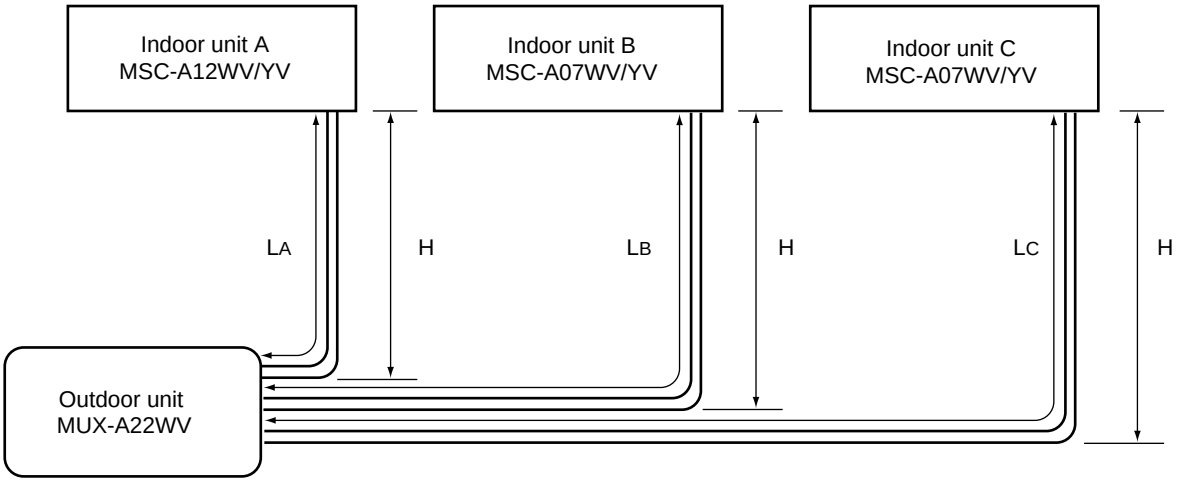

	UNIT No.	Pipe length				Height difference (H)	No. of bends	
Max. limits	Unit A	LA	15m			10m	10	
	Unit B	LB	15m	LB + LC	Total 30m	10m	10	Total 15
	Unit C	LC	15m			10m	10	

ADDITIONAL REFRIGERANT CHARGE (R410A:g)

	Outdoor unit precharged	Refrigerant piping length (one way)								
Unit A		7m	8m	9m	10m	11m	12m	13m	14m	15m
	850g	0	20	40	60	80	100	120	140	160

	Outdoor unit precharged	Refrigerant piping length (one way, 2 unit total)																				
Unit B + Unit C		10 m	11 m	12 m	13 m	14 m	15 m	16 m	17 m	18 m	19 m	20 m	21 m	22 m	23 m	24 m	25 m	26 m	27 m	28 m	29 m	30 m
	850g	0	10	20	30	40	50	60	70	80	90	100	110	120	130	140	150	160	170	180	190	200

PIPING PREPARATION

①Table below shows the specifications of pipes commercially available.

UNIT No.	Pipe	Outside diameter mm	Insulation thickness	Insulation material
Unit A	For liquid	6.35	8mm	Heat resisting foam plastic 0.045 specific gravity
	For gas	12.7	8mm	
Unit B and Unit C	For liquid	6.35	8mm	
	For gas	9.52	8mm	

②Ensure that the 2 refrigerant pipes are well insulated to prevent condensation.

③Refrigerant bending radius must be 100mm or more.

MUX-A25WV

MAX.REFRIGERANT PIPING LENGTH & MAX. HEIGHT DIFFERENCE

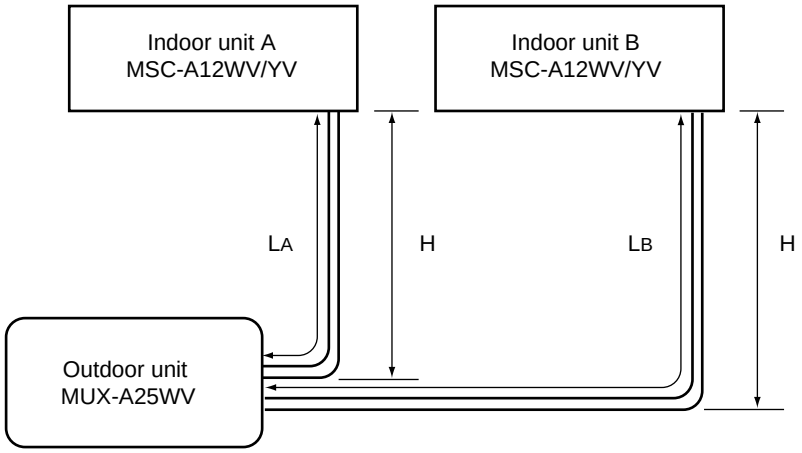

	UNIT No.	Pipe length		Height difference (H)	No. of bends
Max. limits	A	LA	15m	10m	10
	B	LB	15m	10m	10

ADDITIONAL REFRIGERANT CHARGE (R410A:g)

	Outdoor unit precharged	Refrigerant piping length (one way)								
A unit		7m	8m	9m	10m	11m	12m	13m	14m	15m
	950g	0	20	40	60	80	100	120	140	160
B unit	Outdoor unit precharged	Refrigerant piping length (one way)								
		7m	8m	9m	10m	11m	12m	13m	14m	15m
	950g	0	20	40	60	80	100	120	140	160

PIPING PREPARATION

①Table below shows the specifications of pipes commercially available.

UNIT No.	Pipe	Outside diameter mm	Insulation thickness	Insulation material
A and B unit	For liquid	6.35	8mm	Heat resisting foam plastic 0.045 specific gravity
	For gas	12.7	8mm	

②Ensure that the 2 refrigerant pipes are well insulated to prevent condensation.

③Refrigerant bending radius must be 10cm or more.

MUX-A26WV

MAX.REFRIGERANT PIPING LENGTH & MAX. HEIGHT DIFFERENCE

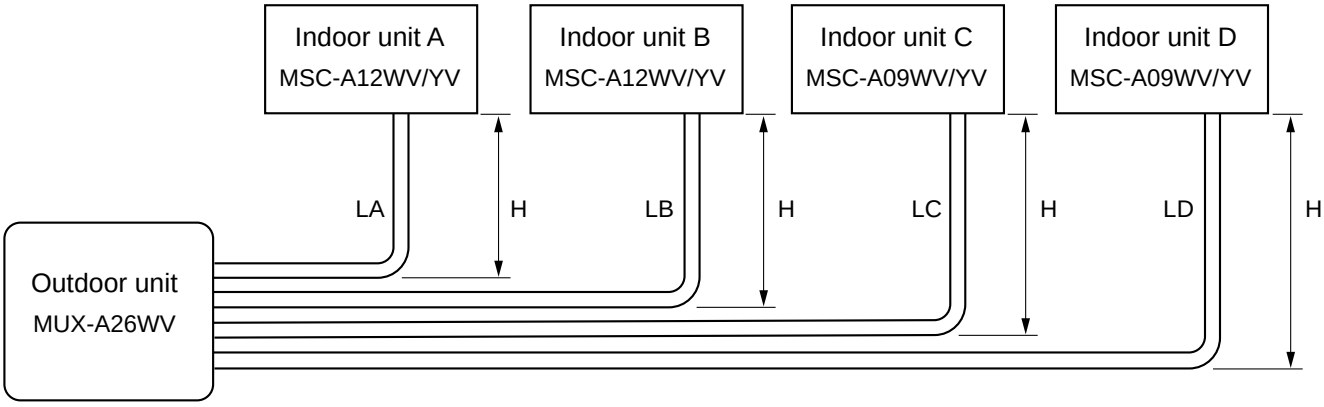

	UNIT No.	Pipe length				Height difference (H)	No. of bends	
Max. limits	A	LA	15m	LA + LB	Total 30m	10m	10	Total 15
	B	LB	15m			10m	10	
	C	LC	15m	LC + LD	Total 30m	10m	10	Total 15
	D	LD	15m			10m	10	

ADDITIONAL REFRIGERANT CHARGE (R410A:g)

UNIT No.	Outdoor unit precharged	Refrigerant piping length (one way, 2 unit total)																				
		10 m	11 m	12 m	13 m	14 m	15 m	16 m	17 m	18 m	19 m	20 m	21 m	22 m	23 m	24 m	25 m	26 m	27 m	28 m	29 m	30 m
A unit + B unit	1050g	0	10	20	30	40	50	60	70	80	90	100	110	120	130	140	150	160	170	180	190	200
C unit + D unit	1050g	0	10	20	30	40	50	60	70	80	90	100	110	120	130	140	150	160	170	180	190	200

PIPING PREPARATION

UNIT No.	Pipe	Outside diameter mm	Insulation thickness	Insulation material
A and B unit	For liquid	6.35	8mm	Heat resisting foam plastic 0.045 specific gravity
	For gas	12.7	8mm	
C and D unit	For liquid	6.35	8mm	
	For gas	9.52	8mm	

MXZ-A18WV
MAX REFRIGERANT PIPING LENGTH

Piping length each indoor unit (a, b)	20m
Total piping length (a+b)	30m
Height difference between units (H)	10m
Bending point for each unit	15
Total bending point	30

✻It does not matter which unit is higher.

Outdoor unit precharged	Refrigerant piping length (one way, 2 unit total)		
	20m	25m	30m
1,750	0	100	200

Calculation : Xg=20g/mx(Refrigerant piping length(m)-20)

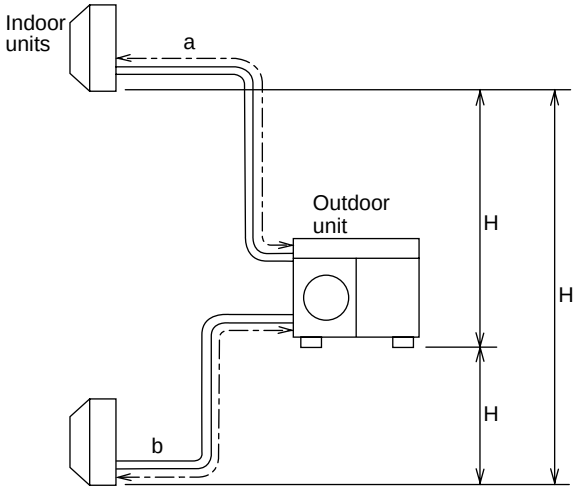

- Refrigerant pipe diameter is different according to indoor unit to be connected. When using extension pipes, refer to the tables below.
- When diameter of refrigerant pipe is different from that of outdoor unit union, use optional Different-diameter pipe. For further information on Different-diameter pipe, see page BACK COVER.

Unit : mm (inch)

Indoor unit			Extension pipe diameter	
class	Pipe diameter			
07/09	Liquid	6.35(1/4)	Liquid	6.35(1/4)
	Gas	9.52(3/8)	Gas	9.52(3/8)
12	Liquid	6.35(1/4)	Liquid	6.35(1/4)
	Gas	12.7(1/2)	Gas	12.7(1/2)

Outdoor unit union diameter		
For		
Indoor unit A	Liquid	6.35(1/4)
	Gas	9.52(3/8)
Indoor unit B	Liquid	6.35(1/4)
	Gas	9.52(3/8)

MXZ-A26WV
MAX REFRIGERANT PIPING LENGTH

Piping length each indoor unit (a, b, c)	25m
Total piping length (a+b+c)	50m
Height difference between units (H)	10m
Bending point for each unit	25
Total bending point	50

✻It does not matter which unit is higher.

Outdoor unit precharged	Refrigerant piping length (one way, 3 unit total)		
	40m	45m	50m
3,500	0	100	200

Calculation : Xg=20g/mx(Refrigerant piping length(m)-40)

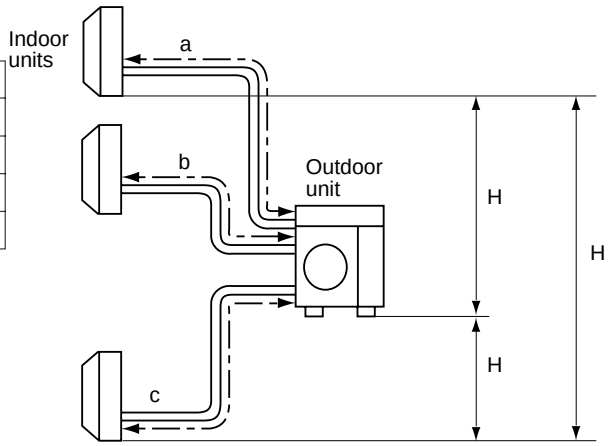

- Refrigerant pipe diameter is different according to indoor unit to be connected. When using extension pipes,refer to the tables below.
- When diameter of refrigerant pipe is different from that of outdoor unit union, use optional Different-diameter pipe. For further information on Different-diameter pipe,see page BACK COVER.

Unit : mm (inch)

Indoor unit			Extension pipe diameter	
class	Pipe diameter			
07/09	Liquid	6.35(1/4)	Liquid	6.35(1/4)
	Gas	9.52(3/8)	Gas	9.52(3/8)
12	Liquid	6.35(1/4)	Liquid	6.35(1/4)
	Gas	9.52(3/8) or 12.7(1/2)	Gas	12.7(1/2)
18	Liquid	6.35(1/4)	Liquid	6.35(1/4)
	Gas	12.7(1/2)	Gas	12.7(1/2)
24	Liquid	6.35(1/4)	Liquid	6.35(1/4)
	Gas	15.88(5/8)	Gas	15.88(5/8)
26	Liquid	9.52(3/8)	Liquid	9.52(3/8)
	Gas	15.88(5/8)	Gas	15.88(5/8)

Outdoor unit union diameter		
For		
Indoor unit A	Liquid	6.35(1/4)
	Gas	12.7(1/2)
Indoor unit B	Liquid	6.35(1/4)
	Gas	9.52(3/8)
Indoor unit C	Liquid	6.35(1/4)
	Gas	9.52(3/8)

MXZ-A32WV
MAX REFRIGERANT PIPING LENGTH

Piping length each indoor unit (a, b, c, d)	25m
Total piping length (a+b+c+d)	70m
Height difference between units (H)	10m
Bending point for each unit	25
Total bending point	70

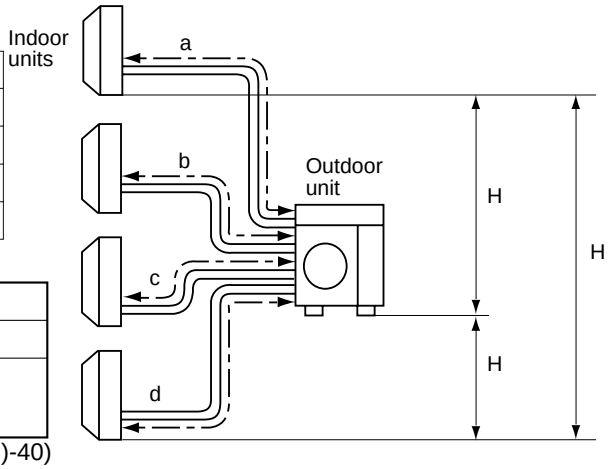

✻It does not matter which unit is higher.

Outdoor unit precharged	Refrigerant piping length (one way, 4 unit total)			
	40m	50m	60m	70m
3,500	0	200	400	600

Calculation : Xg=20g/mx(Refrigerant piping length(m)-40)

- Refrigerant pipe diameter is different according to indoor unit to be connected. When using extension pipes,refer to the tables below.
- When diameter of refrigerant pipe is different from that of outdoor unit union, use optional Different-diameter pipe. For further information on Different-diameter pipe,see page BACK COVER.

Unit : mm (inch)

Indoor unit			Extension pipe diameter	
class	Pipe diameter			
07/09	Liquid	6.35(1/4)	Liquid	6.35(1/4)
	Gas	9.52(3/8)	Gas	9.52(3/8)
12	Liquid	6.35(1/4)	Liquid	6.35(1/4)
	Gas	9.52(3/8) or 12.7(1/2)	Gas	12.7(1/2)
18	Liquid	6.35(1/4)	Liquid	6.35(1/4)
	Gas	12.7(1/2)	Gas	12.7(1/2)
24	Liquid	6.35(1/4)	Liquid	6.35(1/4)
	Gas	15.88(5/8)	Gas	15.88(5/8)
26	Liquid	9.52(3/8)	Liquid	9.52(3/8)
	Gas	15.88(5/8)	Gas	15.88(5/8)

Outdoor unit union diameter		
For		
Indoor unit A	Liquid	6.35(1/4)
	Gas	12.7(1/2)
Indoor unit B	Liquid	6.35(1/4)
	Gas	12.7(1/2)
Indoor unit C	Liquid	6.35(1/4)
	Gas	9.52(3/8)
Indoor unit D	Liquid	6.35(1/4)
	Gas	9.52(3/8)

C.3.6 PERFORMANCE CURVES

C.3.6.1 Cool Only

CAPACITY AND THE INPUT CURVES (ONE INDOOR UNIT WITH ONE OUTDOOR UNIT)

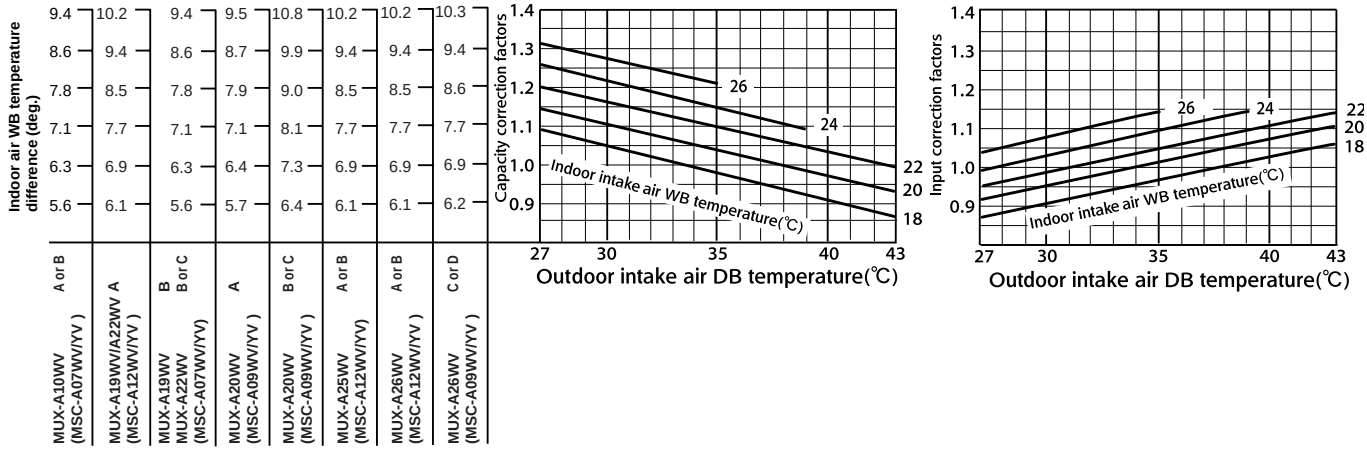

OUTDOOR LOW PRESSURE AND OUTDOOR UNIT CURRENT

COOL operation

① Both indoor and outdoor unit are under same temperature/humidity condition.

Dry-bulb temperature	Relative humidity (%)
20	50
25	60
30	70

② Air flow should be set at MAX.

③ The unit of pressure has been changed to MPa on the international system of units(SI unit system).
The conversion factor is : **1(MPa[Gauge]) =10.2(kgf/㎠[Gauge])**

MUX-A10WV

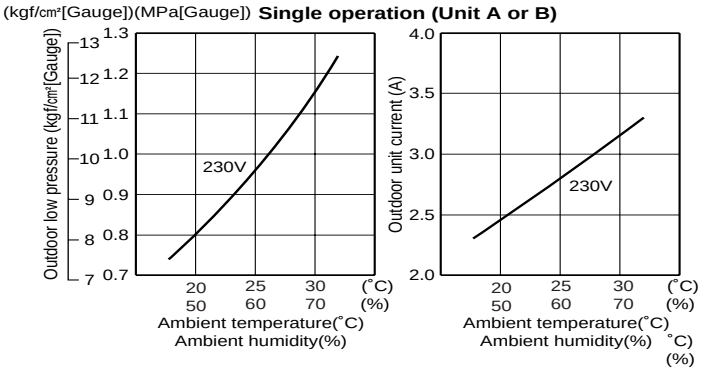

MUX-A19WV

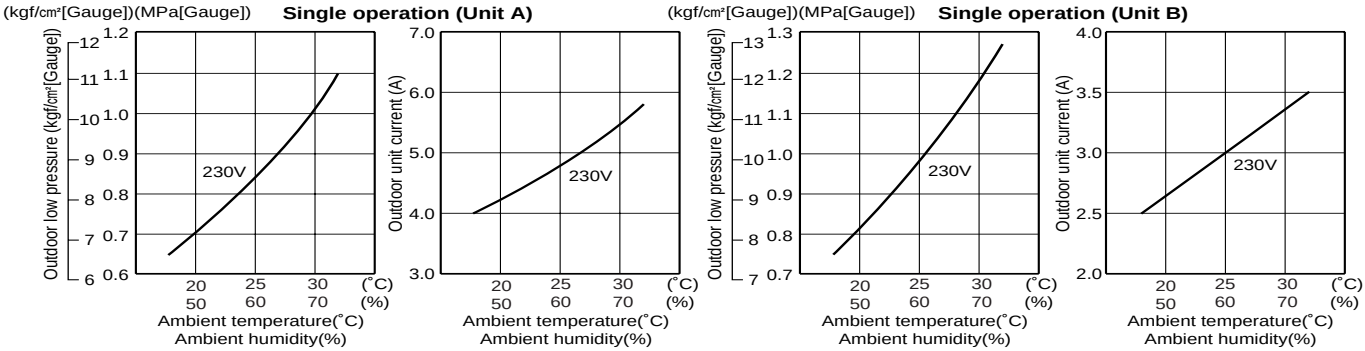

MUX-A20WV

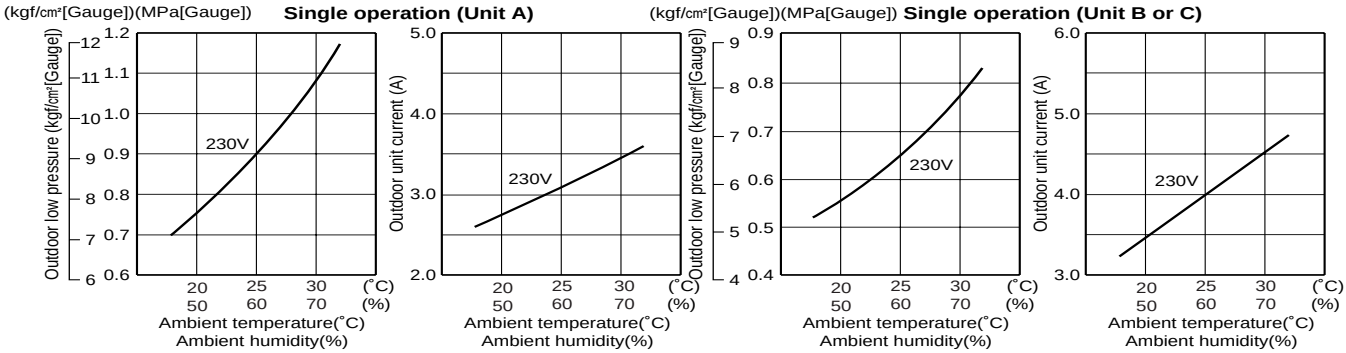

MUX-A22WV

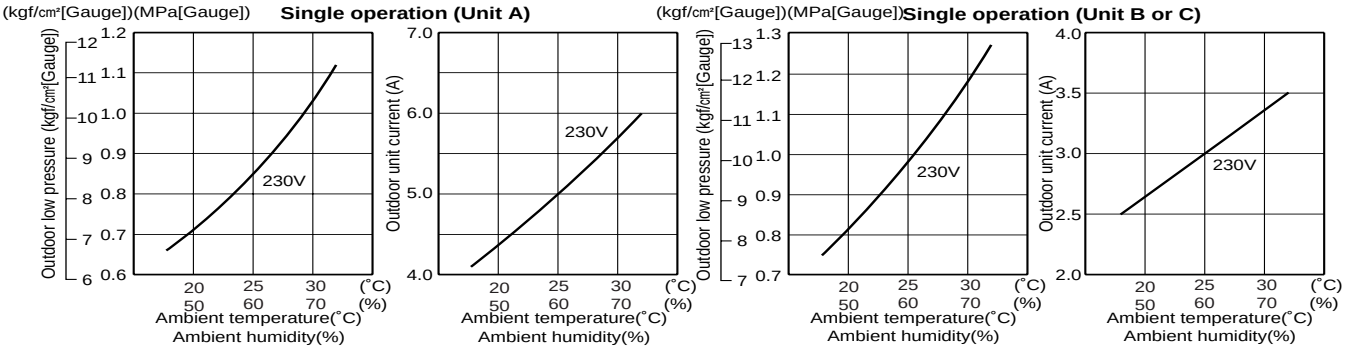

MUX-A25WV

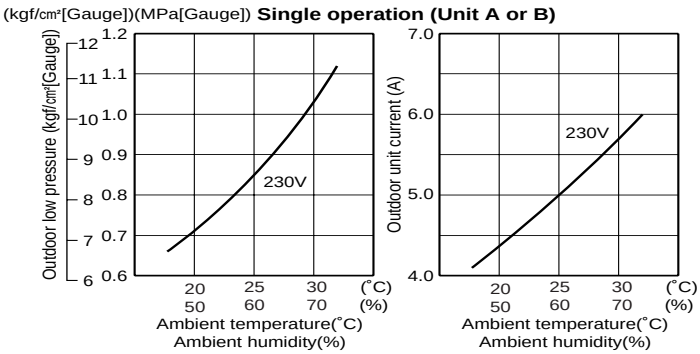

MUX-A26WV

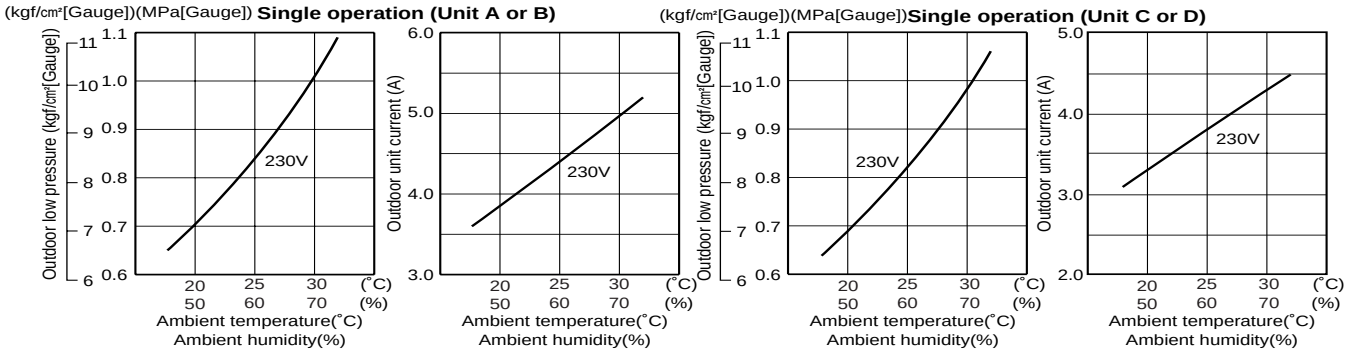

C.3.6.2 Inverter Heat Pump

Capacity and the input curves

MXZ-A18WV

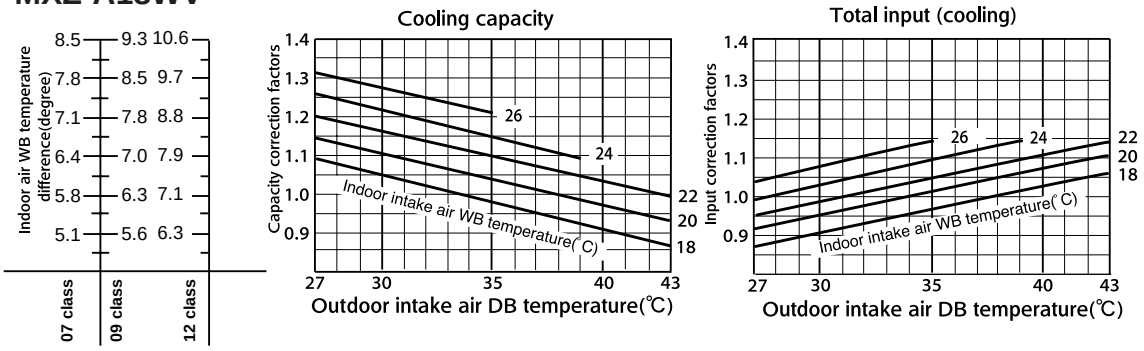

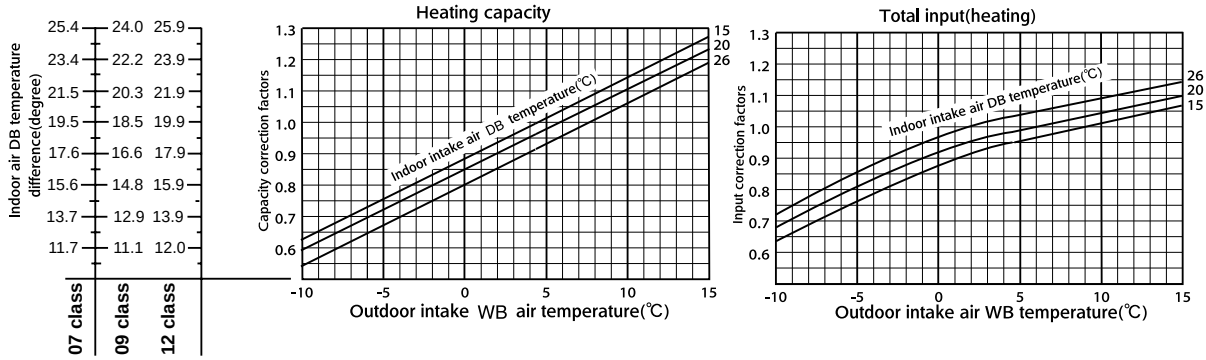

MXZ-A26WV
MXZ-A32WV

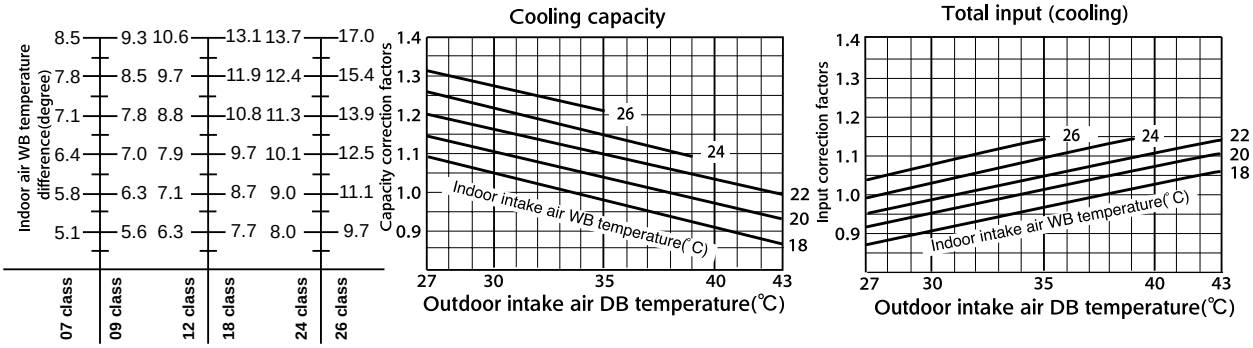

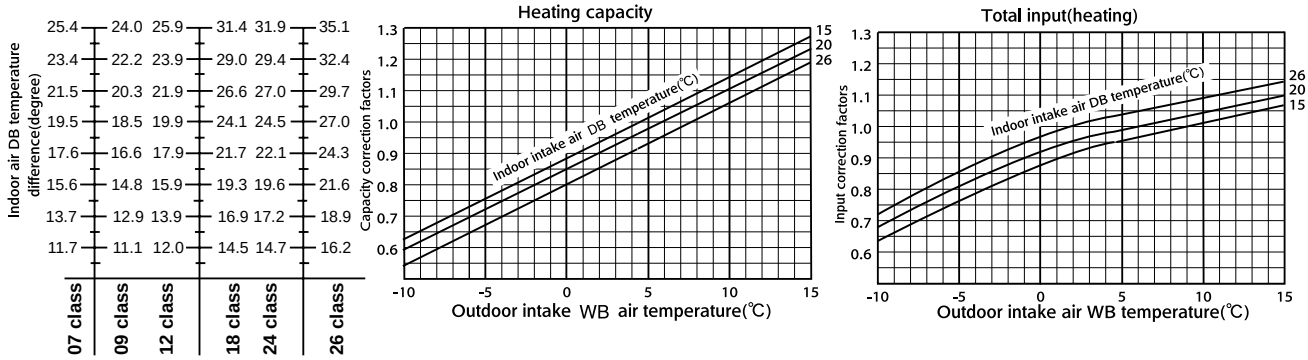

Capacity and input correction by inverter output frequency (OUTDOOR UNIT : MXZ-A18WV)

1. 07-class unit in single operation

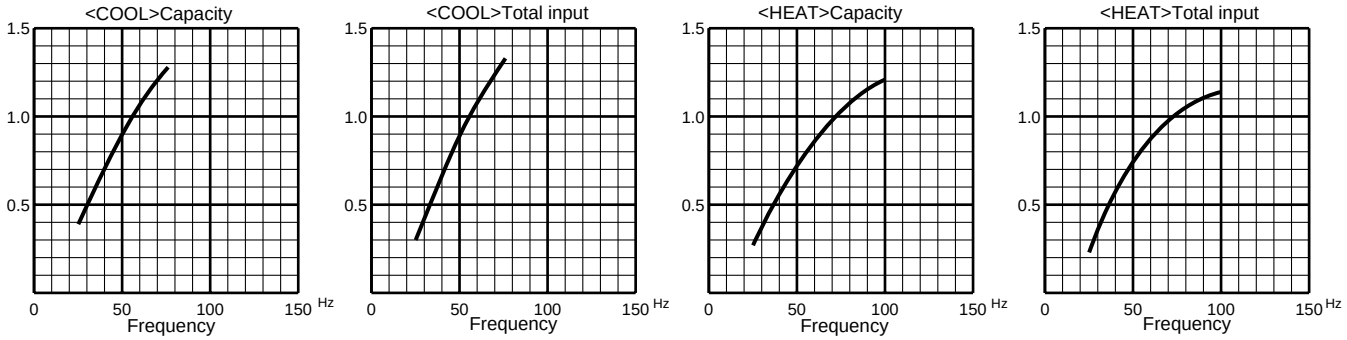

2. 09-class unit in single operation

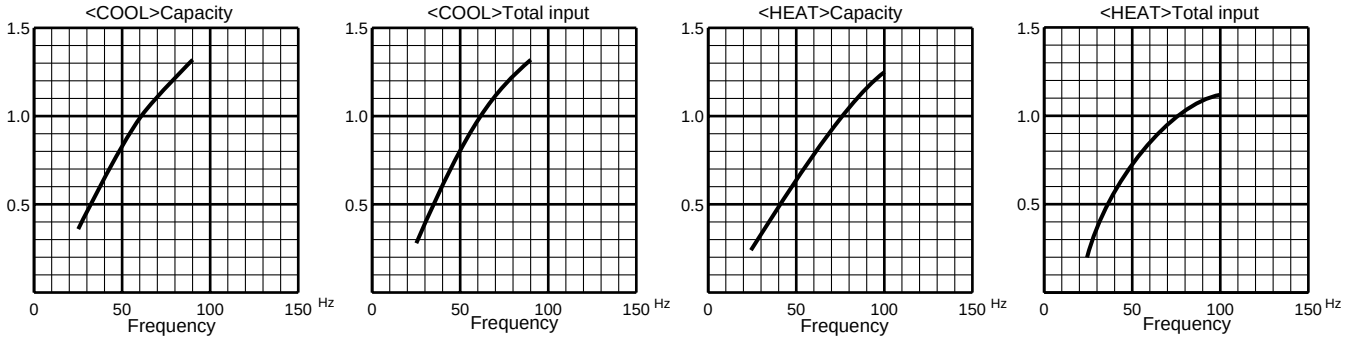

3. 12-class unit in single operation

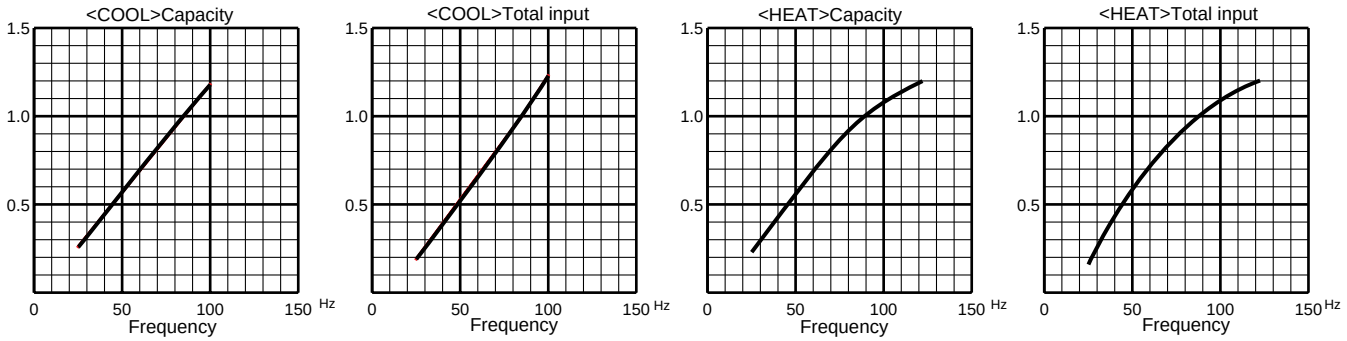

(OUTDOOR UNIT:MXZ-A26WV, MXZ-A32WV)

1. 07-class unit in single operation

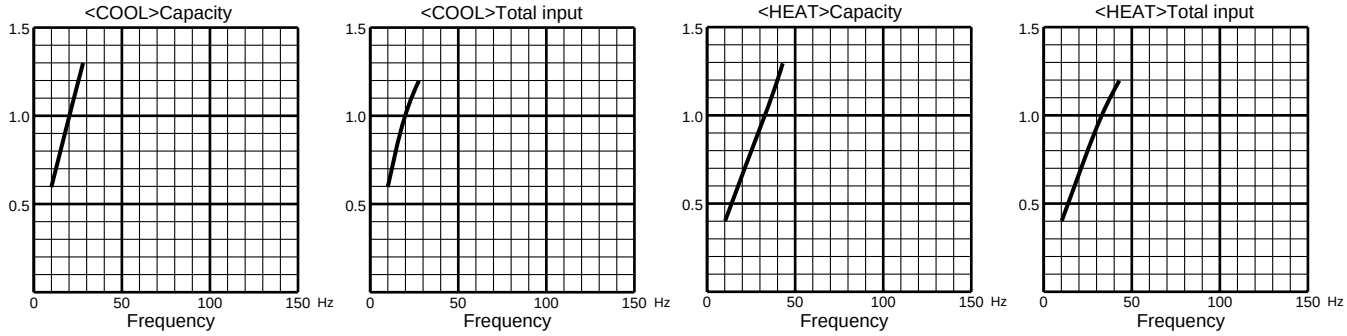

2. 09-class unit in single operation

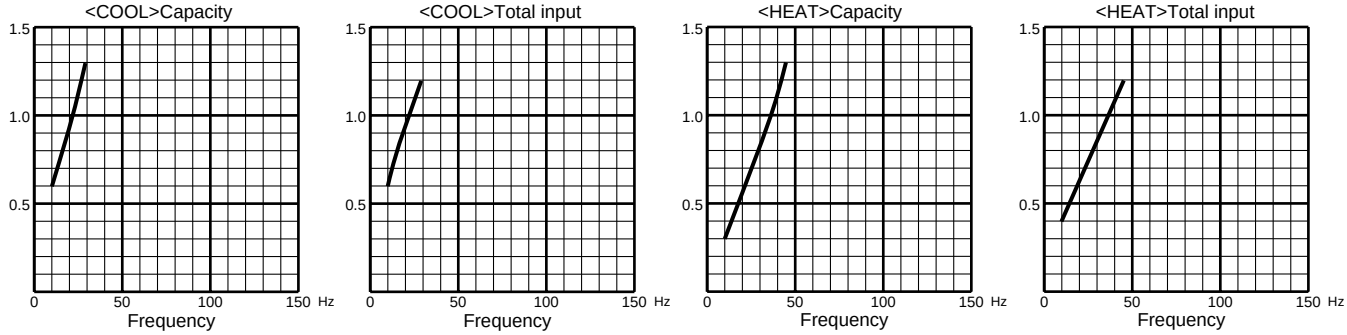

3. 12-class unit in single operation

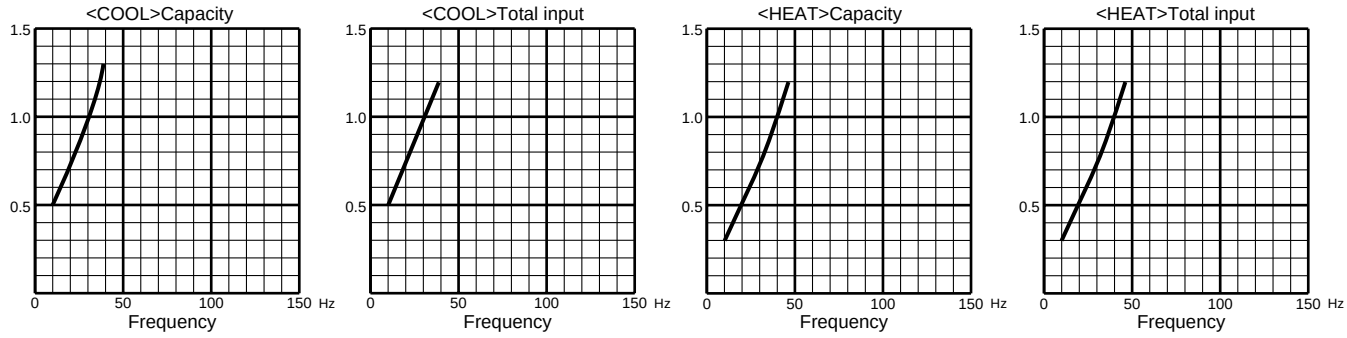

4. 18-class unit in single operation

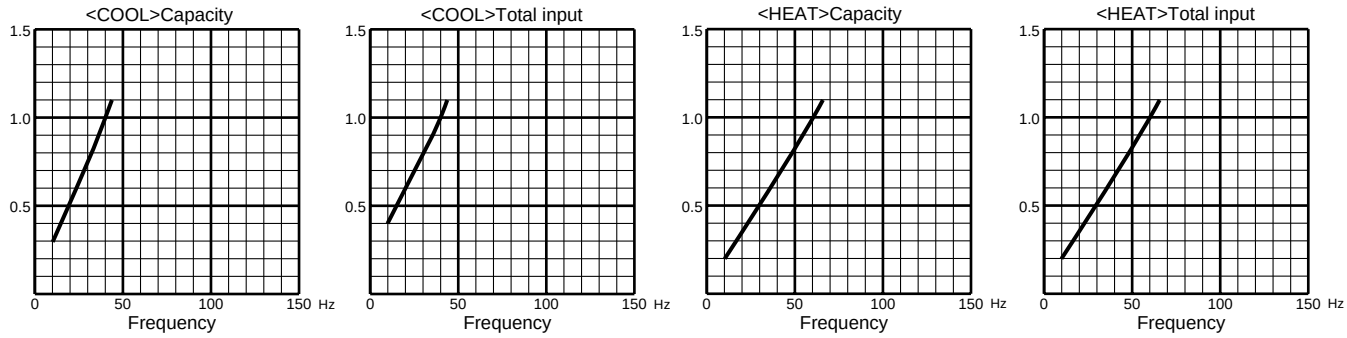

5. 24-class unit in single operation

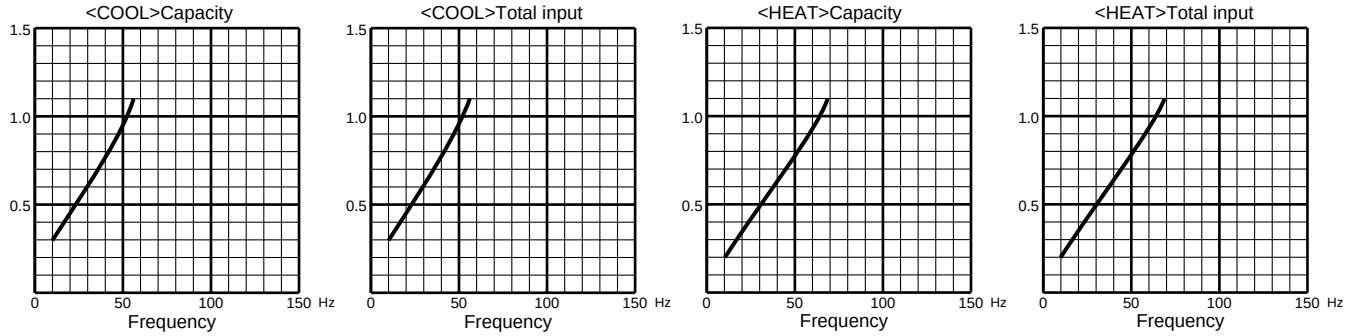

(OUTDOOR UNIT:MXZ-A26WV, MXZ-A32WV)

6. 26-class unit in single operation

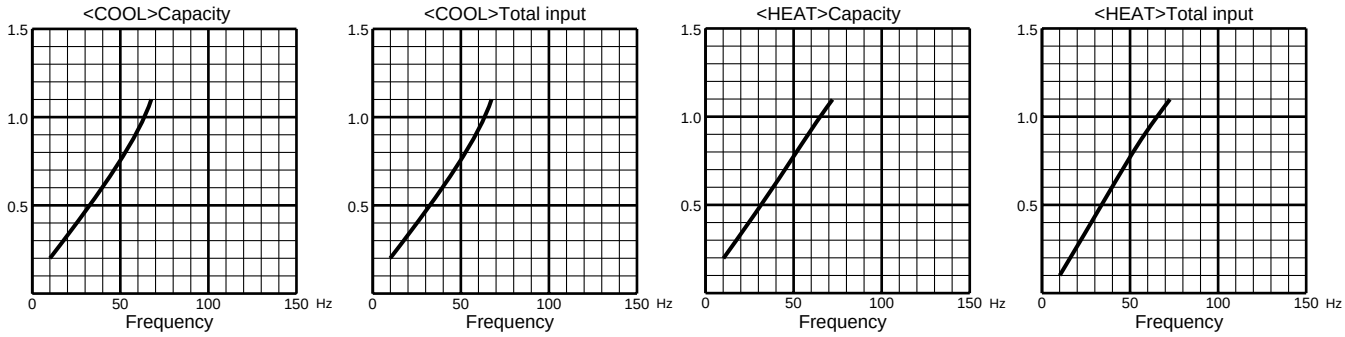

Outdoor low pressure and outdoor unit current

(1) COOL operation

①Both indoor and outdoor units are under the same temperature/humidity condition.

Dry-bulb temperature(°C)	Relative humidity(%)
20	50
25	60
30	70

②Air flow speed : High
③Inverter output frequency : 33Hz(MXZ-A18WV)
: 24Hz(MXZ-A26/A32WV)

<How to work fixed-frequency operation>
1.Set emergency switch to COOL or HEAT. The switch is located on indoor unit.
2.Press emergency operation button.
3.Compressor starts running at rated frequency.
4.Indoor fan runs at High speed and continues for 30 minutes.
5.To cancel this operation, press emergency operation button or any button on remote controller.

NOTE: The unit of pressure has been changed to MPa on the international system of units(SI unit system).
The conversion factor is : **1(MPa[Gauge]) =10.2(kgf/㎠[Gauge])**

MXZ-A18WV

1. 07-class unit in single operation

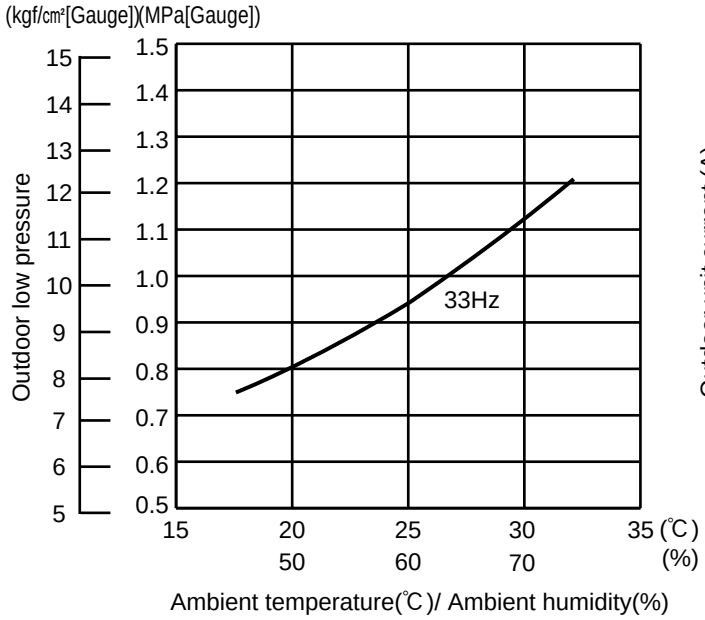

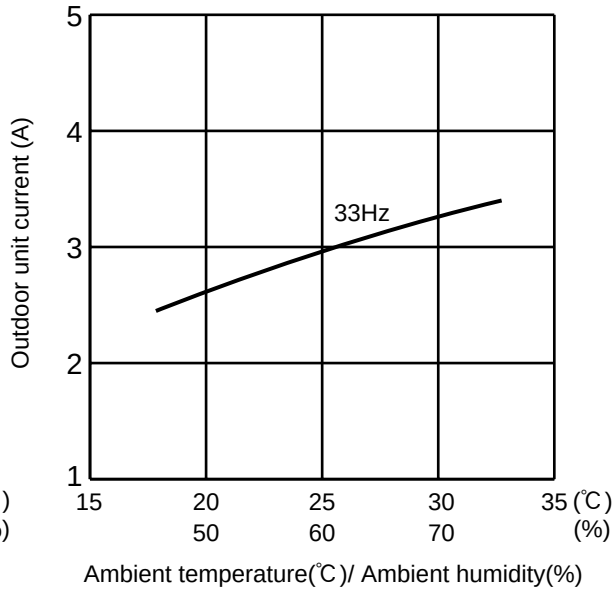

MXZ-A18WV

2. 09-class unit in single operation

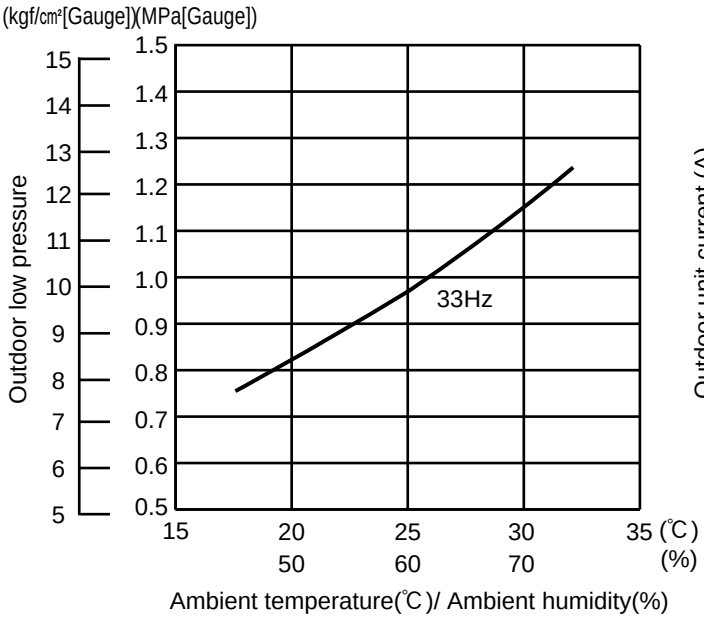

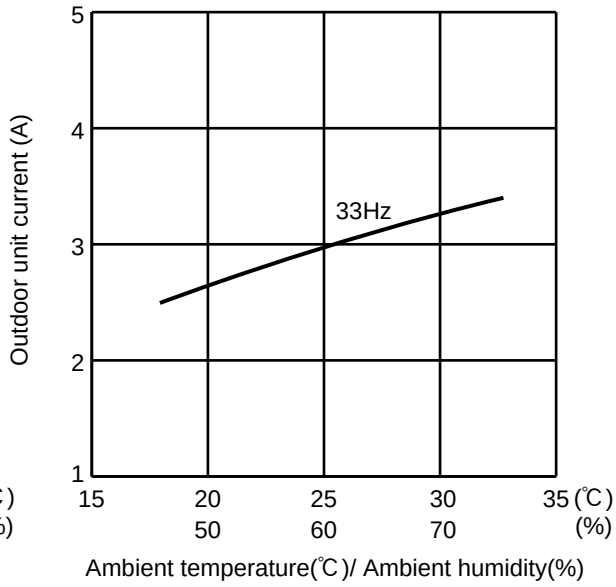

3. 12-class unit in single operation

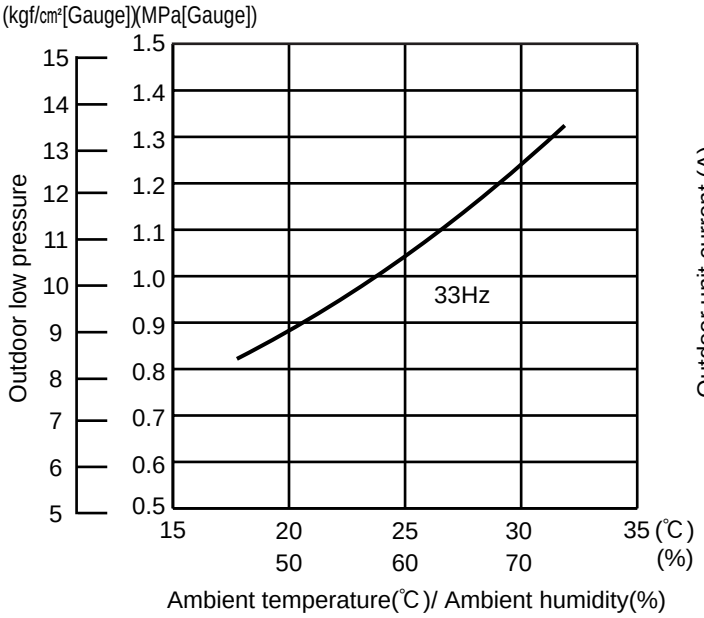

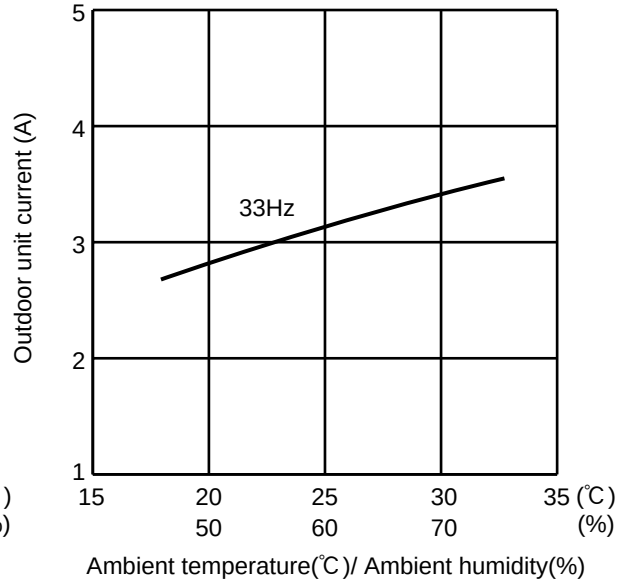

MXZ-A26WV/A32WV

1. 07-class unit in single operation

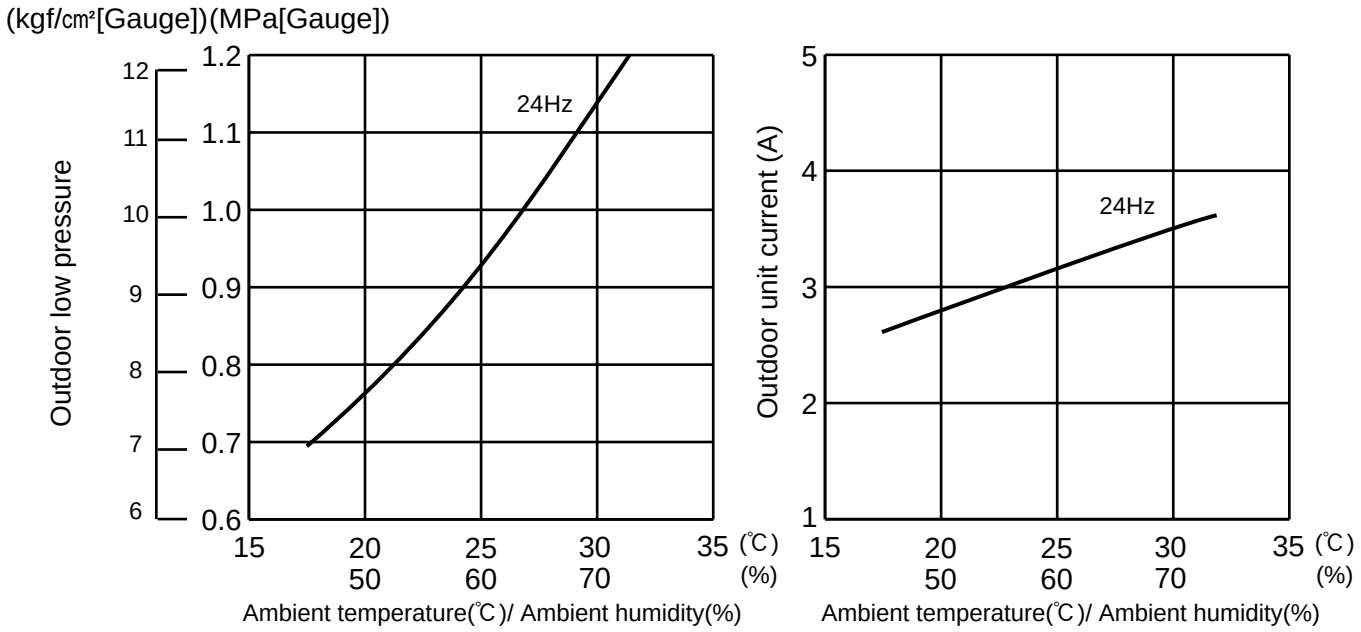

2. 09-class unit in single operation

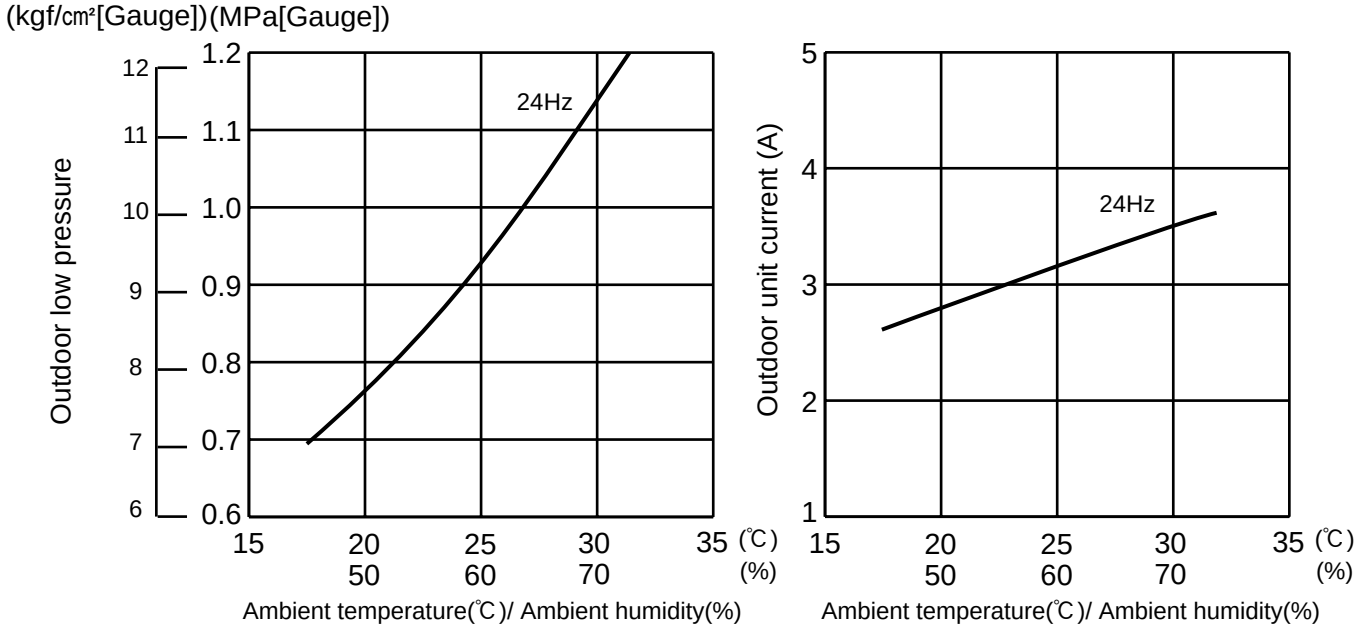

MXZ-A26WV/A32WV

3. 12-class unit in single operation

(kgf/cm²[Gauge])(MPa[Gauge])

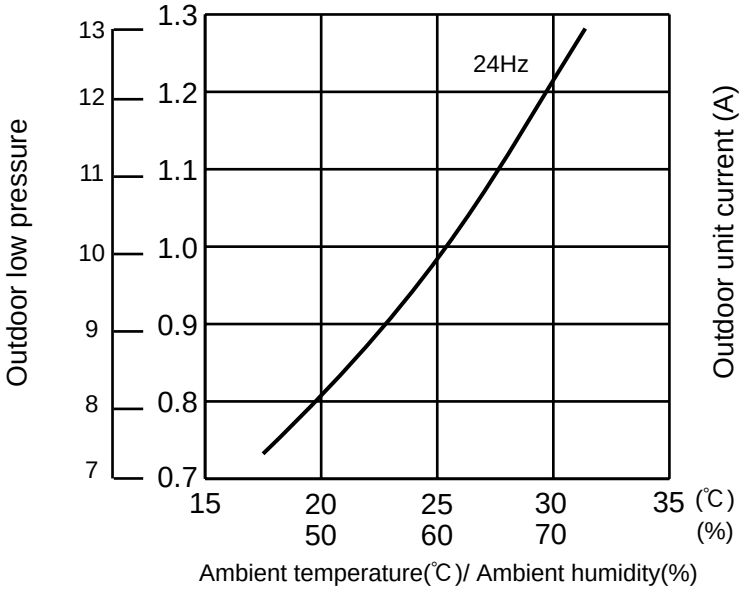

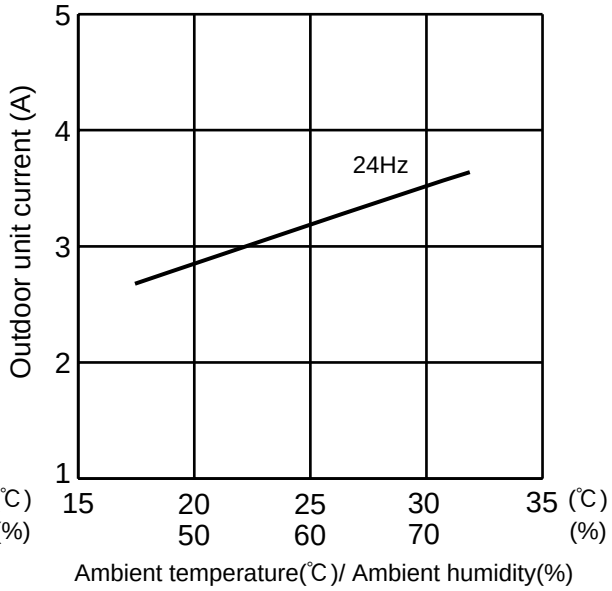

4. 18-class unit in single operation

(kgf/cm²[Gauge])(MPa[Gauge])

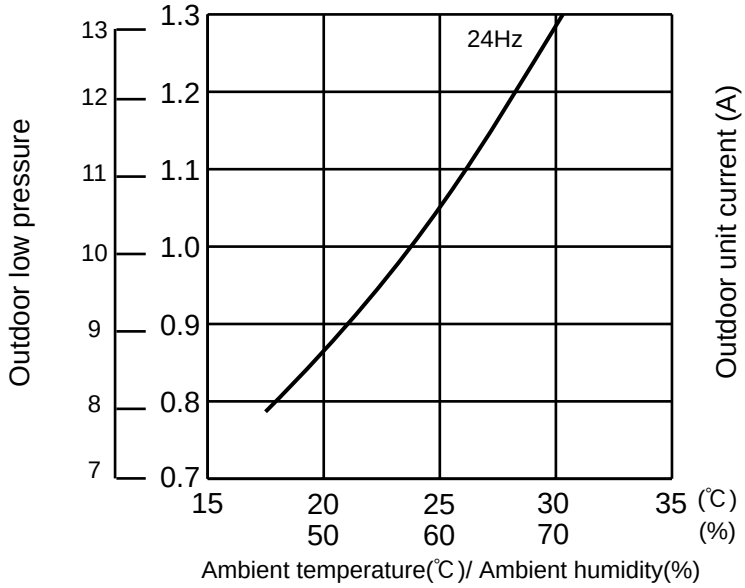

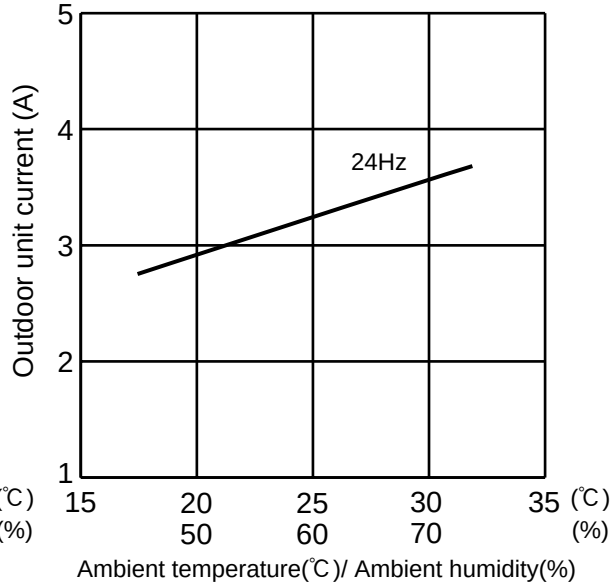

MXZ-A26WV/A32WV

5. 24-class unit in single operation

(kgf/cm²[Gauge])(MPa[Gauge])

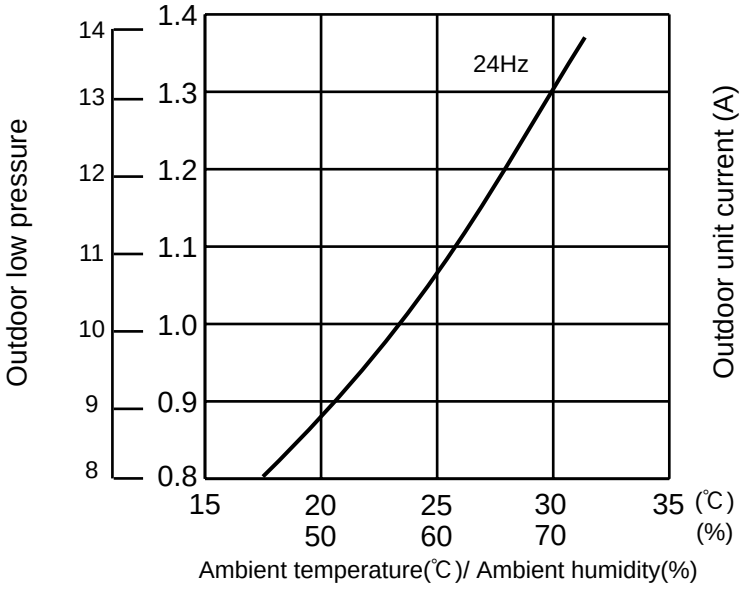

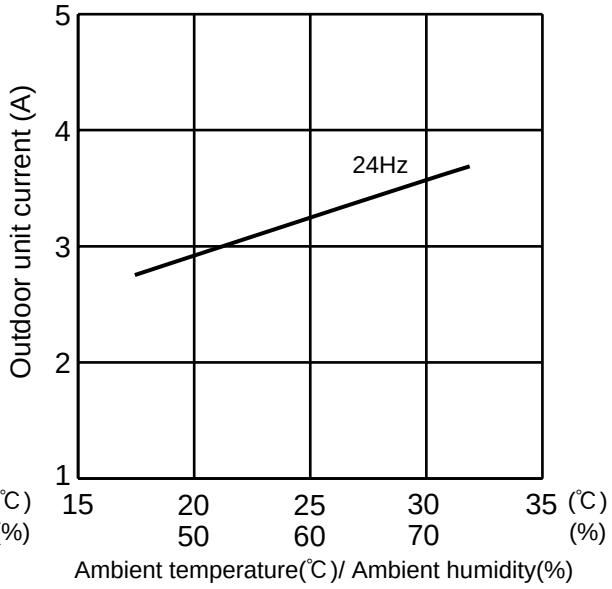

6. 26-class unit in single operation

(kgf/cm²[Gauge])(MPa[Gauge])

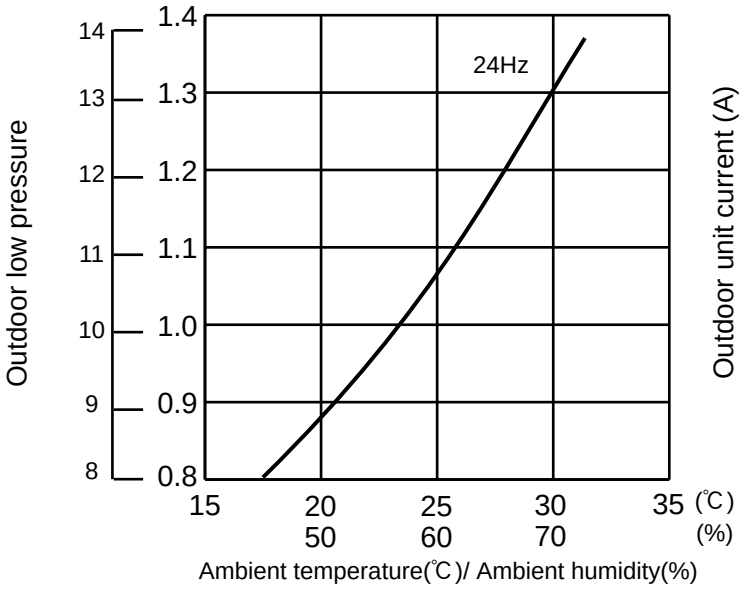

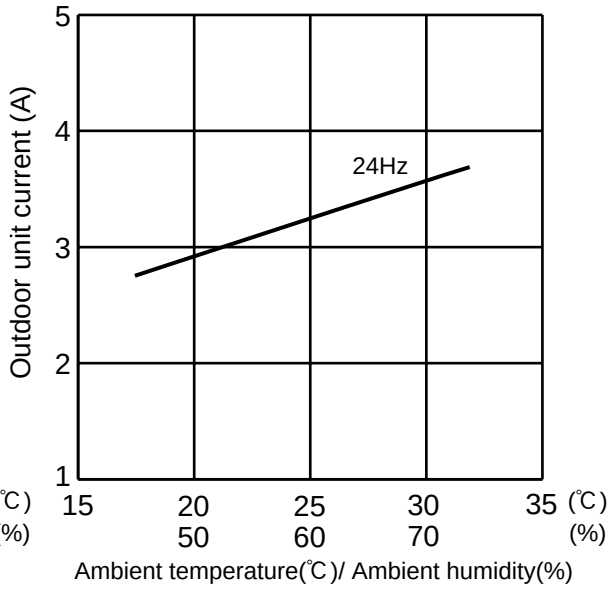

(2) HEAT operation

① Indoor

DB(°C)	20.0
WB(°C)	14.5

Outdoor

DB(°C)	2	7	15	20.0
WB(°C)	1	6	12	14.5

② Set air flow to High speed.
③ Inverter output frequency :45Hz.(MXZ-A18WV)
:32Hz.(MXZ-A26/A32WV)

MXZ-A18WV

1. 07-class unit in single operation

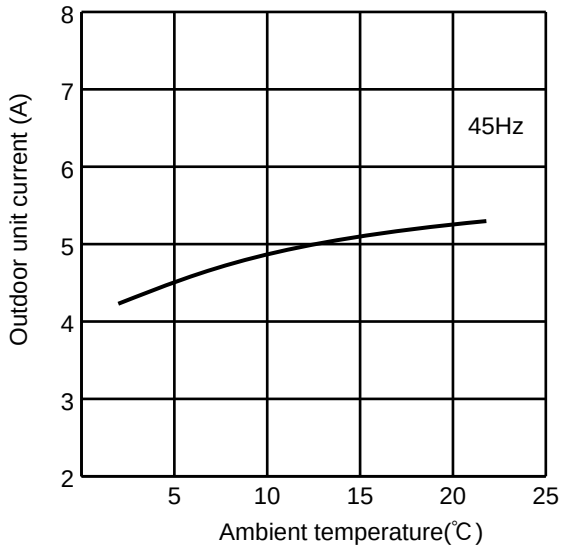

2. 09-class unit in single operation

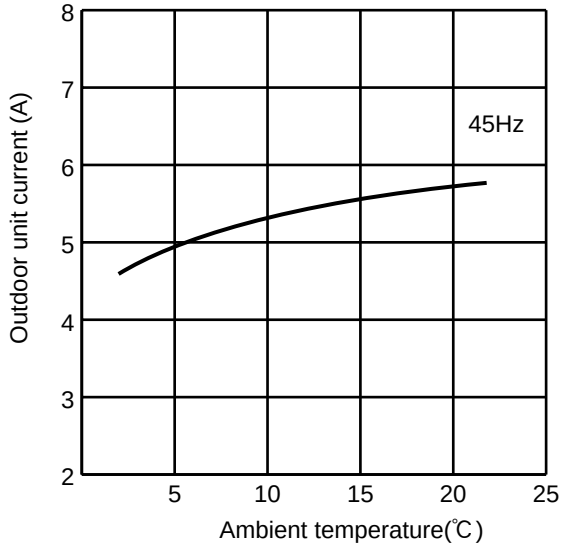

3. 12-class unit in single operation

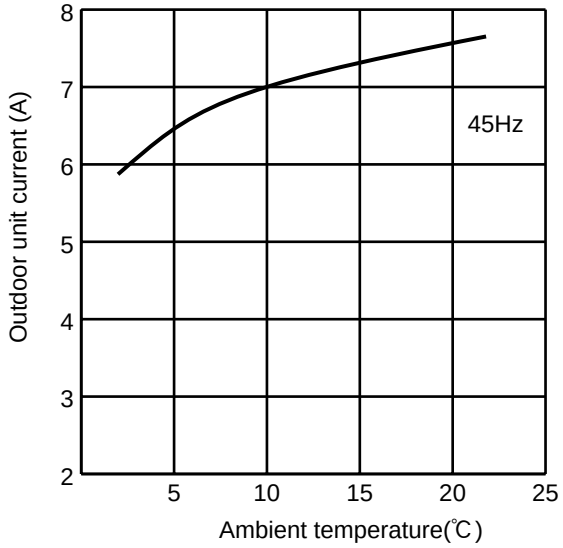

MXZ-A26WV/A32WV

1. 07-class unit in single operation

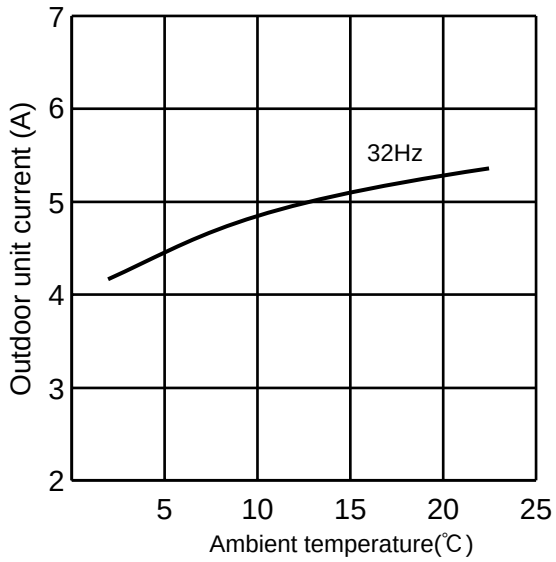

2. 09-class unit in single operation

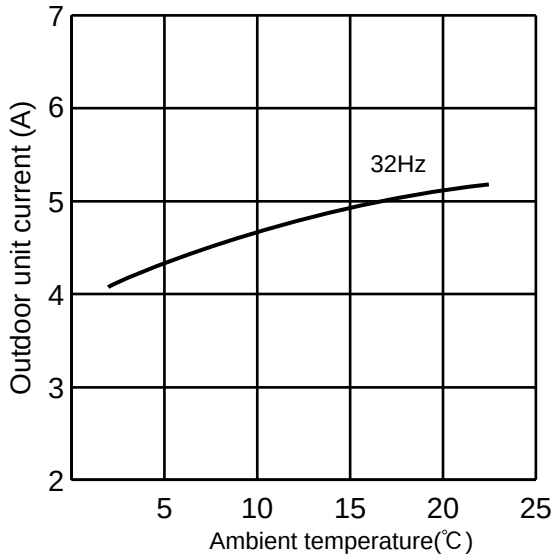

3. 12-class unit in single operation

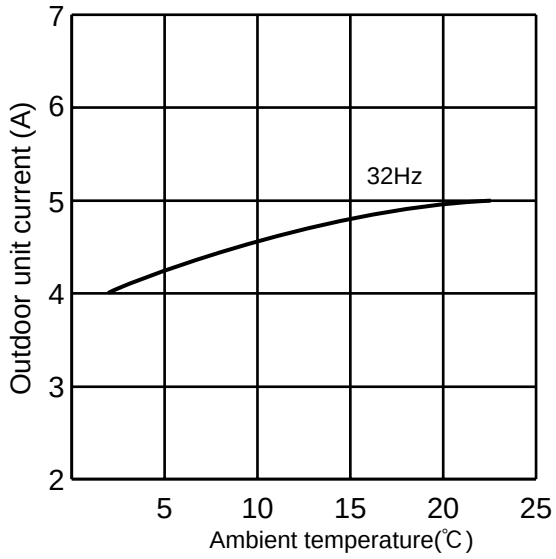

4. 18-class unit in single operation

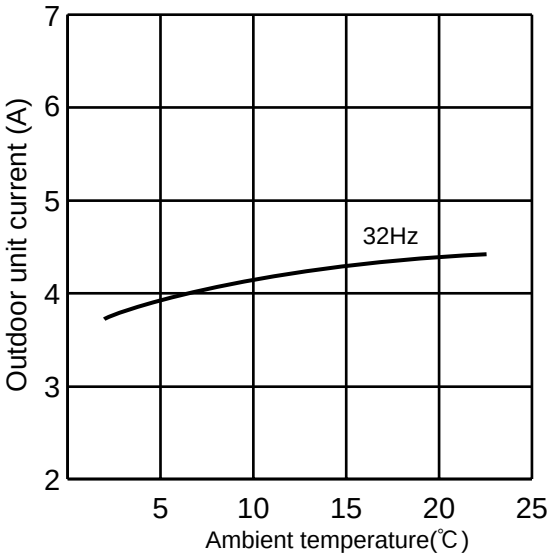

MXZ-A26WV/A32WV

5. 24-class unit in single operation

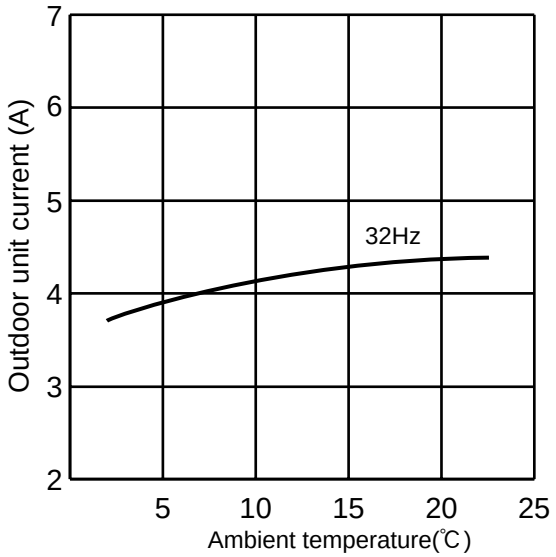

6. 26-class unit in single operation

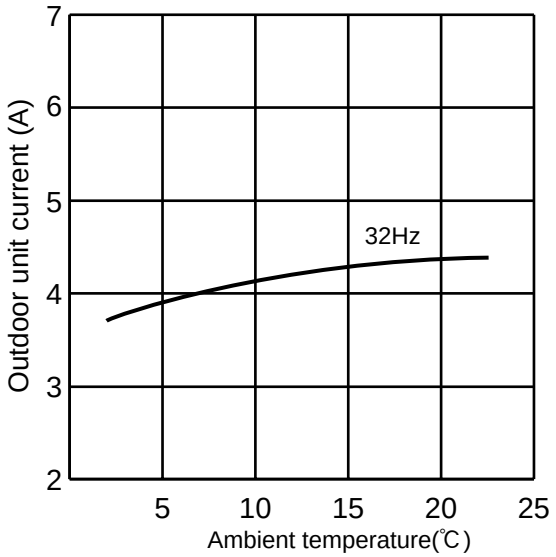

C.3.7 PERFORMANCE DATA

COOL operation (230V)

MSC-A07WV/YV(Single) : MUX-A10WV

CAPACITY : 2.4(kW) SHF : 0.74 INPUT : 760(W)

		OUTDOOR DB(℃)															
INDOOR DB(℃)	INDOOR WB(℃)	21				25				27				30			
		Q	SHC	SHF	INPUT	Q	SHC	SHF	INPUT	Q	SHC	SHF	INPUT	Q	SHC	SHF	INPUT
21	18	2.82	1.58	0.56	608	2.70	1.51	0.56	638	2.59	1.45	0.56	669	2.50	1.40	0.56	699
21	20	2.94	1.29	0.44	638	2.82	1.24	0.44	676	2.74	1.20	0.44	692	2.64	1.16	0.44	722
22	18	2.82	1.69	0.60	608	2.70	1.62	0.60	638	2.59	1.56	0.60	669	2.50	1.50	0.60	699
22	20	2.94	1.41	0.48	638	2.82	1.35	0.48	676	2.74	1.31	0.48	692	2.64	1.27	0.48	722
22	22	3.06	1.10	0.36	661	2.95	1.06	0.36	703	2.88	1.04	0.36	722	2.76	0.99	0.36	752
23	18	2.82	1.80	0.64	608	2.70	1.73	0.64	638	2.59	1.66	0.64	669	2.50	1.60	0.64	699
23	20	2.94	1.53	0.52	638	2.82	1.47	0.52	676	2.74	1.42	0.52	692	2.64	1.37	0.52	722
23	22	3.06	1.22	0.40	661	2.95	1.18	0.40	703	2.88	1.15	0.40	722	2.76	1.10	0.40	752
24	18	2.82	1.92	0.68	608	2.70	1.84	0.68	638	2.59	1.76	0.68	669	2.50	1.70	0.68	699
24	20	2.94	1.65	0.56	638	2.82	1.58	0.56	676	2.74	1.53	0.56	692	2.64	1.48	0.56	722
24	22	3.06	1.35	0.44	661	2.95	1.30	0.44	703	2.88	1.27	0.44	722	2.76	1.21	0.44	752
24	24	3.22	1.03	0.32	692	3.10	0.99	0.32	730	3.02	0.97	0.32	752	2.93	0.94	0.32	790
25	18	2.82	2.03	0.72	608	2.70	1.94	0.72	638	2.59	1.87	0.72	669	2.50	1.80	0.72	699
25	20	2.94	1.76	0.60	638	2.82	1.69	0.60	676	2.74	1.64	0.60	692	2.64	1.58	0.60	722
25	22	3.06	1.47	0.48	661	2.95	1.42	0.48	703	2.88	1.38	0.48	722	2.76	1.32	0.48	752
25	24	3.22	1.16	0.36	692	3.10	1.11	0.36	730	3.02	1.09	0.36	752	2.93	1.05	0.36	790
26	18	2.82	2.14	0.76	608	2.70	2.05	0.76	638	2.59	1.97	0.76	669	2.50	1.90	0.76	699
26	20	2.94	1.88	0.64	638	2.82	1.80	0.64	676	2.74	1.75	0.64	692	2.64	1.69	0.64	722
26	22	3.06	1.59	0.52	661	2.95	1.54	0.52	703	2.88	1.50	0.52	722	2.76	1.44	0.52	752
26	24	3.22	1.29	0.40	692	3.10	1.24	0.40	730	3.02	1.21	0.40	752	2.93	1.17	0.40	790
26	26	3.31	0.93	0.28	730	3.22	0.90	0.28	768	3.17	0.89	0.28	790	3.07	0.86	0.28	813
27	18	2.82	2.26	0.80	608	2.70	2.16	0.80	638	2.59	2.07	0.80	669	2.50	2.00	0.80	699
27	20	2.94	2.00	0.68	638	2.82	1.92	0.68	676	2.74	1.86	0.68	692	2.64	1.80	0.68	722
27	22	3.06	1.71	0.56	661	2.95	1.65	0.56	703	2.88	1.61	0.56	722	2.76	1.55	0.56	752
27	24	3.22	1.42	0.44	692	3.10	1.36	0.44	730	3.02	1.33	0.44	752	2.93	1.29	0.44	790
27	26	3.31	1.06	0.32	730	3.22	1.03	0.32	768	3.17	1.01	0.32	790	3.07	0.98	0.32	813
28	18	2.82	2.37	0.84	608	2.70	2.27	0.84	638	2.59	2.18	0.84	669	2.50	2.10	0.84	699
28	20	2.94	2.12	0.72	638	2.82	2.03	0.72	676	2.74	1.97	0.72	692	2.64	1.90	0.72	722
28	22	3.06	1.84	0.60	661	2.95	1.77	0.60	703	2.88	1.73	0.60	722	2.76	1.66	0.60	752
28	24	3.22	1.54	0.48	692	3.10	1.49	0.48	730	3.02	1.45	0.48	752	2.93	1.41	0.48	790
28	26	3.31	1.19	0.36	730	3.22	1.16	0.36	768	3.17	1.14	0.36	790	3.07	1.11	0.36	813
29	18	2.82	2.48	0.88	608	2.70	2.38	0.88	638	2.59	2.28	0.88	669	2.50	2.20	0.88	699
29	20	2.94	2.23	0.76	638	2.82	2.14	0.76	676	2.74	2.08	0.76	692	2.64	2.01	0.76	722
29	22	3.06	1.96	0.64	661	2.95	1.89	0.64	703	2.88	1.84	0.64	722	2.76	1.77	0.64	752
29	24	3.22	1.67	0.52	692	3.10	1.61	0.52	730	3.02	1.57	0.52	752	2.93	1.52	0.52	790
29	26	3.31	1.32	0.40	730	3.22	1.29	0.40	768	3.17	1.27	0.40	790	3.07	1.23	0.40	813
30	18	2.82	2.59	0.92	608	2.70	2.48	0.92	638	2.59	2.38	0.92	669	2.50	2.30	0.92	699
30	20	2.94	2.35	0.80	638	2.82	2.26	0.80	676	2.74	2.19	0.80	692	2.64	2.11	0.80	722
30	22	3.06	2.08	0.68	661	2.95	2.01	0.68	703	2.88	1.96	0.68	722	2.76	1.88	0.68	752
30	24	3.22	1.80	0.56	692	3.10	1.73	0.56	730	3.02	1.69	0.56	752	2.93	1.64	0.56	790
30	26	3.31	1.46	0.44	730	3.22	1.42	0.44	768	3.17	1.39	0.44	790	3.07	1.35	0.44	813
31	18	2.82	2.71	0.96	608	2.70	2.59	0.96	638	2.59	2.49	0.96	669	2.50	2.40	0.96	699
31	20	2.94	2.47	0.84	638	2.82	2.37	0.84	676	2.74	2.30	0.84	692	2.64	2.22	0.84	722
31	22	3.06	2.20	0.72	661	2.95	2.13	0.72	703	2.88	2.07	0.72	722	2.76	1.99	0.72	752
31	24	3.22	1.93	0.60	692	3.10	1.86	0.60	730	3.02	1.81	0.60	752	2.93	1.76	0.60	790
31	26	3.31	1.59	0.48	730	3.22	1.54	0.48	768	3.17	1.52	0.48	790	3.07	1.47	0.48	813
32	18	2.82	2.82	1.00	608	2.70	2.70	1.00	638	2.59	2.59	1.00	669	2.50	2.50	1.00	699
32	20	2.94	2.59	0.88	638	2.82	2.48	0.88	676	2.74	2.41	0.88	692	2.64	2.32	0.88	722
32	22	3.06	2.33	0.76	661	2.95	2.24	0.76	703	2.88	2.19	0.76	722	2.76	2.10	0.76	752
32	24	3.22	2.06	0.64	692	3.10	1.98	0.64	730	3.02	1.94	0.64	752	2.93	1.87	0.64	790
32	26	3.31	1.72	0.52	730	3.22	1.67	0.52	768	3.17	1.65	0.52	790	3.07	1.60	0.52	813

NOTE Q :Total capacity (kW) SHF :Sensible heat factor DB :Dry-bulb temperature
SHC :Sensible heat capacity (kW) INPUT :Total power input (W) WB :Wet-bulb temperature

COOL operation (230V)

MSC-A07WV/YV(Single) : MUX-A10WV

CAPACITY : 2.4(kW) SHF : 0.74 INPUT : 760(W)

		OUTDOOR DB(℃)											
INDOOR DB(℃)	INDOOR WB(℃)	35				40				43			
		Q	SHC	SHF	INPUT	Q	SHC	SHF	INPUT	Q	SHC	SHF	INPUT
21	18	2.35	1.32	0.56	745	2.16	1.21	0.56	790	2.08	1.16	0.56	806
21	20	2.47	1.09	0.44	775	2.30	1.01	0.44	813	2.22	0.98	0.44	836
22	18	2.35	1.41	0.60	745	2.16	1.30	0.60	790	2.08	1.25	0.60	806
22	20	2.47	1.19	0.48	775	2.30	1.11	0.48	813	2.22	1.07	0.48	836
22	22	2.62	0.94	0.36	806	2.45	0.88	0.36	851	2.36	0.85	0.36	866
23	18	2.35	1.51	0.64	745	2.16	1.38	0.64	790	2.08	1.33	0.64	806
23	20	2.47	1.29	0.52	775	2.30	1.20	0.52	813	2.22	1.15	0.52	836
23	22	2.62	1.05	0.40	806	2.45	0.98	0.40	851	2.36	0.95	0.40	866
24	18	2.35	1.60	0.68	745	2.16	1.47	0.68	790	2.08	1.41	0.68	806
24	20	2.47	1.38	0.56	775	2.30	1.29	0.56	813	2.22	1.24	0.56	836
24	22	2.62	1.15	0.44	806	2.45	1.08	0.44	851	2.36	1.04	0.44	866
24	24	2.76	0.88	0.32	836	2.59	0.83	0.32	874	2.52	0.81	0.32	893
25	18	2.35	1.69	0.72	745	2.16	1.56	0.72	790	2.08	1.49	0.72	806
25	20	2.47	1.48	0.60	775	2.30	1.38	0.60	813	2.22	1.33	0.60	836
25	22	2.62	1.26	0.48	806	2.45	1.18	0.48	851	2.36	1.13	0.48	866
25	24	2.76	0.99	0.36	836	2.59	0.93	0.36	874	2.52	0.91	0.36	893
26	18	2.35	1.79	0.76	745	2.16	1.64	0.76	790	2.08	1.58	0.76	806
26	20	2.47	1.58	0.64	775	2.30	1.47	0.64	813	2.22	1.42	0.64	836
26	22	2.62	1.36	0.52	806	2.45	1.27	0.52	851	2.36	1.23	0.52	866
26	24	2.76	1.10	0.40	836	2.59	1.04	0.40	874	2.52	1.01	0.40	893
26	26	2.90	0.81	0.28	866	2.74	0.77	0.28	904	2.65	0.74	0.28	923
27	18	2.35	1.88	0.80	745	2.16	1.73	0.80	790	2.08	1.66	0.80	806
27	20	2.47	1.68	0.68	775	2.30	1.57	0.68	813	2.22	1.51	0.68	836
27	22	2.62	1.46	0.56	806	2.45	1.37	0.56	851	2.36	1.32	0.56	866
27	24	2.76	1.21	0.44	836	2.59	1.14	0.44	874	2.52	1.11	0.44	893
27	26	2.90	0.93	0.32	866	2.74	0.88	0.32	904	2.65	0.85	0.32	923
28	18	2.35	1.98	0.84	745	2.16	1.81	0.84	790	2.08	1.74	0.84	806
28	20	2.47	1.78	0.72	775	2.30	1.66	0.72	813	2.22	1.60	0.72	836
28	22	2.62	1.57	0.60	806	2.45	1.47	0.60	851	2.36	1.42	0.60	866
28	24	2.76	1.32	0.48	836	2.59	1.24	0.48	874	2.52	1.21	0.48	893
28	26	2.90	1.05	0.36	866	2.74	0.98	0.36	904	2.65	0.95	0.36	923
29	18	2.35	2.07	0.88	745	2.16	1.90	0.88	790	2.08	1.83	0.88	806
29	20	2.47	1.88	0.76	775	2.30	1.75	0.76	813	2.22	1.69	0.76	836
29	22	2.62	1.67	0.64	806	2.45	1.57	0.64	851	2.36	1.51	0.64	866
29	24	2.76	1.44	0.52	836	2.59	1.35	0.52	874	2.52	1.31	0.52	893
29	26	2.90	1.16	0.40	866	2.74	1.09	0.40	904	2.65	1.06	0.40	923
30	18	2.35	2.16	0.92	745	2.16	1.99	0.92	790	2.08	1.91	0.92	806
30	20	2.47	1.98	0.80	775	2.30	1.84	0.80	813	2.22	1.78	0.80	836
30	22	2.62	1.78	0.68	806	2.45	1.66	0.68	851	2.36	1.61	0.68	866
30	24	2.76	1.55	0.56	836	2.59	1.45	0.56	874	2.52	1.41	0.56	893
30	26	2.90	1.28	0.44	866	2.74	1.20	0.44	904	2.65	1.17	0.44	923
31	18	2.35	2.26	0.96	745	2.16	2.07	0.96	790	2.08	1.99	0.96	806
31	20	2.47	2.08	0.84	775	2.30	1.94	0.84	813	2.22	1.86	0.84	836
31	22	2.62	1.88	0.72	806	2.45	1.76	0.72	851	2.36	1.70	0.72	866
31	24	2.76	1.66	0.60	836	2.59	1.56	0.60	874	2.52	1.51	0.60	893
31	26	2.90	1.39	0.48	866	2.74	1.31	0.48	904	2.65	1.27	0.48	923
32	18	2.35	2.35	1.00	745	2.16	2.16	1.00	790	2.08	2.08	1.00	806
32	20	2.47	2.18	0.88	775	2.30	2.03	0.88	813	2.22	1.95	0.88	836
32	22	2.62	1.99	0.76	806	2.45	1.86	0.76	851	2.36	1.80	0.76	866
32	24	2.76	1.77	0.64	836	2.59	1.66	0.64	874	2.52	1.61	0.64	893
32	26	2.90	1.51	0.52	866	2.74	1.42	0.52	904	2.65	1.38	0.52	923

NOTE Q :Total capacity (kW) SHF :Sensible heat factor DB :Dry-bulb temperature
SHC :Sensible heat capacity (kW) INPUT :Total power input (W) WB :Wet-bulb temperature

COOL operation (230V)

MSC-A07WV/YV(Single:Room B) : MUX-A19WV

CAPACITY : 2.4(kW) SHF : 0.74 INPUT : 820(W)

		OUTDOOR DB(℃)															
INDOOR DB(℃)	INDOOR WB(℃)	21				25				27				30			
		Q	SHC	SHF	INPUT	Q	SHC	SHF	INPUT	Q	SHC	SHF	INPUT	Q	SHC	SHF	INPUT
21	18	2.82	1.58	0.56	656	2.70	1.51	0.56	689	2.59	1.45	0.56	722	2.50	1.40	0.56	754
21	20	2.94	1.29	0.44	689	2.82	1.24	0.44	730	2.74	1.20	0.44	746	2.64	1.16	0.44	779
22	18	2.82	1.69	0.60	656	2.70	1.62	0.60	689	2.59	1.56	0.60	722	2.50	1.50	0.60	754
22	20	2.94	1.41	0.48	689	2.82	1.35	0.48	730	2.74	1.31	0.48	746	2.64	1.27	0.48	779
22	22	3.06	1.10	0.36	713	2.95	1.06	0.36	759	2.88	1.04	0.36	779	2.76	0.99	0.36	812
23	18	2.82	1.80	0.64	656	2.70	1.73	0.64	689	2.59	1.66	0.64	722	2.50	1.60	0.64	754
23	20	2.94	1.53	0.52	689	2.82	1.47	0.52	730	2.74	1.42	0.52	746	2.64	1.37	0.52	779
23	22	3.06	1.22	0.40	713	2.95	1.18	0.40	759	2.88	1.15	0.40	779	2.76	1.10	0.40	812
24	18	2.82	1.92	0.68	656	2.70	1.84	0.68	689	2.59	1.76	0.68	722	2.50	1.70	0.68	754
24	20	2.94	1.65	0.56	689	2.82	1.58	0.56	730	2.74	1.53	0.56	746	2.64	1.48	0.56	779
24	22	3.06	1.35	0.44	713	2.95	1.30	0.44	759	2.88	1.27	0.44	779	2.76	1.21	0.44	812
24	24	3.22	1.03	0.32	746	3.10	0.99	0.32	787	3.02	0.97	0.32	812	2.93	0.94	0.32	853
25	18	2.82	2.03	0.72	656	2.70	1.94	0.72	689	2.59	1.87	0.72	722	2.50	1.80	0.72	754
25	20	2.94	1.76	0.60	689	2.82	1.69	0.60	730	2.74	1.64	0.60	746	2.64	1.58	0.60	779
25	22	3.06	1.47	0.48	713	2.95	1.42	0.48	759	2.88	1.38	0.48	779	2.76	1.32	0.48	812
25	24	3.22	1.16	0.36	746	3.10	1.11	0.36	787	3.02	1.09	0.36	812	2.93	1.05	0.36	853
26	18	2.82	2.14	0.76	656	2.70	2.05	0.76	689	2.59	1.97	0.76	722	2.50	1.90	0.76	754
26	20	2.94	1.88	0.64	689	2.82	1.80	0.64	730	2.74	1.75	0.64	746	2.64	1.69	0.64	779
26	22	3.06	1.59	0.52	713	2.95	1.54	0.52	759	2.88	1.50	0.52	779	2.76	1.44	0.52	812
26	24	3.22	1.29	0.40	746	3.10	1.24	0.40	787	3.02	1.21	0.40	812	2.93	1.17	0.40	853
26	26	3.31	0.93	0.28	787	3.22	0.90	0.28	828	3.17	0.89	0.28	853	3.07	0.86	0.28	877
27	18	2.82	2.26	0.80	656	2.70	2.16	0.80	689	2.59	2.07	0.80	722	2.50	2.00	0.80	754
27	20	2.94	2.00	0.68	689	2.82	1.92	0.68	730	2.74	1.86	0.68	746	2.64	1.80	0.68	779
27	22	3.06	1.71	0.56	713	2.95	1.65	0.56	759	2.88	1.61	0.56	779	2.76	1.55	0.56	812
27	24	3.22	1.42	0.44	746	3.10	1.36	0.44	787	3.02	1.33	0.44	812	2.93	1.29	0.44	853
27	26	3.31	1.06	0.32	787	3.22	1.03	0.32	828	3.17	1.01	0.32	853	3.07	0.98	0.32	877
28	18	2.82	2.37	0.84	656	2.70	2.27	0.84	689	2.59	2.18	0.84	722	2.50	2.10	0.84	754
28	20	2.94	2.12	0.72	689	2.82	2.03	0.72	730	2.74	1.97	0.72	746	2.64	1.90	0.72	779
28	22	3.06	1.84	0.60	713	2.95	1.77	0.60	759	2.88	1.73	0.60	779	2.76	1.66	0.60	812
28	24	3.22	1.54	0.48	746	3.10	1.49	0.48	787	3.02	1.45	0.48	812	2.93	1.41	0.48	853
28	26	3.31	1.19	0.36	787	3.22	1.16	0.36	828	3.17	1.14	0.36	853	3.07	1.11	0.36	877
29	18	2.82	2.48	0.88	656	2.70	2.38	0.88	689	2.59	2.28	0.88	722	2.50	2.20	0.88	754
29	20	2.94	2.23	0.76	689	2.82	2.14	0.76	730	2.74	2.08	0.76	746	2.64	2.01	0.76	779
29	22	3.06	1.96	0.64	713	2.95	1.89	0.64	759	2.88	1.84	0.64	779	2.76	1.77	0.64	812
29	24	3.22	1.67	0.52	746	3.10	1.61	0.52	787	3.02	1.57	0.52	812	2.93	1.52	0.52	853
29	26	3.31	1.32	0.40	787	3.22	1.29	0.40	828	3.17	1.27	0.40	853	3.07	1.23	0.40	877
30	18	2.82	2.59	0.92	656	2.70	2.48	0.92	689	2.59	2.38	0.92	722	2.50	2.30	0.92	754
30	20	2.94	2.35	0.80	689	2.82	2.26	0.80	730	2.74	2.19	0.80	746	2.64	2.11	0.80	779
30	22	3.06	2.08	0.68	713	2.95	2.01	0.68	759	2.88	1.96	0.68	779	2.76	1.88	0.68	812
30	24	3.22	1.80	0.56	746	3.10	1.73	0.56	787	3.02	1.69	0.56	812	2.93	1.64	0.56	853
30	26	3.31	1.46	0.44	787	3.22	1.42	0.44	828	3.17	1.39	0.44	853	3.07	1.35	0.44	877
31	18	2.82	2.71	0.96	656	2.70	2.59	0.96	689	2.59	2.49	0.96	722	2.50	2.40	0.96	754
31	20	2.94	2.47	0.84	689	2.82	2.37	0.84	730	2.74	2.30	0.84	746	2.64	2.22	0.84	779
31	22	3.06	2.20	0.72	713	2.95	2.13	0.72	759	2.88	2.07	0.72	779	2.76	1.99	0.72	812
31	24	3.22	1.93	0.60	746	3.10	1.86	0.60	787	3.02	1.81	0.60	812	2.93	1.76	0.60	853
31	26	3.31	1.59	0.48	787	3.22	1.54	0.48	828	3.17	1.52	0.48	853	3.07	1.47	0.48	877
32	18	2.82	2.82	1.00	656	2.70	2.70	1.00	689	2.59	2.59	1.00	722	2.50	2.50	1.00	754
32	20	2.94	2.59	0.88	689	2.82	2.48	0.88	730	2.74	2.41	0.88	746	2.64	2.32	0.88	779
32	22	3.06	2.33	0.76	713	2.95	2.24	0.76	759	2.88	2.19	0.76	779	2.76	2.10	0.76	812
32	24	3.22	2.06	0.64	746	3.10	1.98	0.64	787	3.02	1.94	0.64	812	2.93	1.87	0.64	853
32	26	3.31	1.72	0.52	787	3.22	1.67	0.52	828	3.17	1.65	0.52	853	3.07	1.60	0.52	877

NOTE Q :Total capacity (kW) SHF :Sensible heat factor DB :Dry-bulb temperature
SHC :Sensible heat capacity (kW) INPUT :Total power input (W) WB :Wet-bulb temperature

COOL operation (230V)

MSC-A07WV/YV (Single : Room B) : MUX-A19WV

CAPACITY : 2.4(kW) SHF : 0.74 INPUT : 820(W)

		OUTDOOR DB(℃)											
INDOOR DB(℃)	INDOOR WB(℃)	35				40				43			
		Q	SHC	SHF	INPUT	Q	SHC	SHF	INPUT	Q	SHC	SHF	INPUT
21	18	2.35	1.32	0.56	804	2.16	1.21	0.56	853	2.08	1.16	0.56	869
21	20	2.47	1.09	0.44	836	2.30	1.01	0.44	877	2.22	0.98	0.44	902
22	18	2.35	1.41	0.60	804	2.16	1.30	0.60	853	2.08	1.25	0.60	869
22	20	2.47	1.19	0.48	836	2.30	1.11	0.48	877	2.22	1.07	0.48	902
22	22	2.62	0.94	0.36	869	2.45	0.88	0.36	918	2.36	0.85	0.36	935
23	18	2.35	1.51	0.64	804	2.16	1.38	0.64	853	2.08	1.33	0.64	869
23	20	2.47	1.29	0.52	836	2.30	1.20	0.52	877	2.22	1.15	0.52	902
23	22	2.62	1.05	0.40	869	2.45	0.98	0.40	918	2.36	0.95	0.40	935
24	18	2.35	1.60	0.68	804	2.16	1.47	0.68	853	2.08	1.41	0.68	869
24	20	2.47	1.38	0.56	836	2.30	1.29	0.56	877	2.22	1.24	0.56	902
24	22	2.62	1.15	0.44	869	2.45	1.08	0.44	918	2.36	1.04	0.44	935
24	24	2.76	0.88	0.32	902	2.59	0.83	0.32	943	2.52	0.81	0.32	964
25	18	2.35	1.69	0.72	804	2.16	1.56	0.72	853	2.08	1.49	0.72	869
25	20	2.47	1.48	0.60	836	2.30	1.38	0.60	877	2.22	1.33	0.60	902
25	22	2.62	1.26	0.48	869	2.45	1.18	0.48	918	2.36	1.13	0.48	935
25	24	2.76	0.99	0.36	902	2.59	0.93	0.36	943	2.52	0.91	0.36	964
26	18	2.35	1.79	0.76	804	2.16	1.64	0.76	853	2.08	1.58	0.76	869
26	20	2.47	1.58	0.64	836	2.30	1.47	0.64	877	2.22	1.42	0.64	902
26	22	2.62	1.36	0.52	869	2.45	1.27	0.52	918	2.36	1.23	0.52	935
26	24	2.76	1.10	0.40	902	2.59	1.04	0.40	943	2.52	1.01	0.40	964
26	26	2.90	0.81	0.28	935	2.74	0.77	0.28	976	2.65	0.74	0.28	996
27	18	2.35	1.88	0.80	804	2.16	1.73	0.80	853	2.08	1.66	0.80	869
27	20	2.47	1.68	0.68	836	2.30	1.57	0.68	877	2.22	1.51	0.68	902
27	22	2.62	1.46	0.56	869	2.45	1.37	0.56	918	2.36	1.32	0.56	935
27	24	2.76	1.21	0.44	902	2.59	1.14	0.44	943	2.52	1.11	0.44	964
27	26	2.90	0.93	0.32	935	2.74	0.88	0.32	976	2.65	0.85	0.32	996
28	18	2.35	1.98	0.84	804	2.16	1.81	0.84	853	2.08	1.74	0.84	869
28	20	2.47	1.78	0.72	836	2.30	1.66	0.72	877	2.22	1.60	0.72	902
28	22	2.62	1.57	0.60	869	2.45	1.47	0.60	918	2.36	1.42	0.60	935
28	24	2.76	1.32	0.48	902	2.59	1.24	0.48	943	2.52	1.21	0.48	964
28	26	2.90	1.05	0.36	935	2.74	0.98	0.36	976	2.65	0.95	0.36	996
29	18	2.35	2.07	0.88	804	2.16	1.90	0.88	853	2.08	1.83	0.88	869
29	20	2.47	1.88	0.76	836	2.30	1.75	0.76	877	2.22	1.69	0.76	902
29	22	2.62	1.67	0.64	869	2.45	1.57	0.64	918	2.36	1.51	0.64	935
29	24	2.76	1.44	0.52	902	2.59	1.35	0.52	943	2.52	1.31	0.52	964
29	26	2.90	1.16	0.40	935	2.74	1.09	0.40	976	2.65	1.06	0.40	996
30	18	2.35	2.16	0.92	804	2.16	1.99	0.92	853	2.08	1.91	0.92	869
30	20	2.47	1.98	0.80	836	2.30	1.84	0.80	877	2.22	1.78	0.80	902
30	22	2.62	1.78	0.68	869	2.45	1.66	0.68	918	2.36	1.61	0.68	935
30	24	2.76	1.55	0.56	902	2.59	1.45	0.56	943	2.52	1.41	0.56	964
30	26	2.90	1.28	0.44	935	2.74	1.20	0.44	976	2.65	1.17	0.44	996
31	18	2.35	2.26	0.96	804	2.16	2.07	0.96	853	2.08	1.99	0.96	869
31	20	2.47	2.08	0.84	836	2.30	1.94	0.84	877	2.22	1.86	0.84	902
31	22	2.62	1.88	0.72	869	2.45	1.76	0.72	918	2.36	1.70	0.72	935
31	24	2.76	1.66	0.60	902	2.59	1.56	0.60	943	2.52	1.51	0.60	964
31	26	2.90	1.39	0.48	935	2.74	1.31	0.48	976	2.65	1.27	0.48	996
32	18	2.35	2.35	1.00	804	2.16	2.16	1.00	853	2.08	2.08	1.00	869
32	20	2.47	2.18	0.88	836	2.30	2.03	0.88	877	2.22	1.95	0.88	902
32	22	2.62	1.99	0.76	869	2.45	1.86	0.76	918	2.36	1.80	0.76	935
32	24	2.76	1.77	0.64	902	2.59	1.66	0.64	943	2.52	1.61	0.64	964
32	26	2.90	1.51	0.52	935	2.74	1.42	0.52	976	2.65	1.38	0.52	996

NOTE Q :Total capacity (kW) SHF :Sensible heat factor DB :Dry-bulb temperature
SHC :Sensible heat capacity (kW) INPUT :Total power input (W) WB :Wet-bulb temperature

COOL operation (230V)

MSC-A12WV/YV(Single : Room A) : MUX-A19WV

CAPACITY : 3.5(kW) SHF : 0.73 INPUT : 1320(W)

		OUTDOOR DB(℃)															
INDOOR DB(℃)	INDOOR WB(℃)	21				25				27				30			
		Q	SHC	SHF	INPUT	Q	SHC	SHF	INPUT	Q	SHC	SHF	INPUT	Q	SHC	SHF	INPUT
21	18	4.11	2.25	0.55	1056	3.94	2.15	0.55	1109	3.78	2.07	0.55	1162	3.64	1.99	0.55	1214
21	20	4.29	1.83	0.43	1109	4.11	1.76	0.43	1175	3.99	1.70	0.43	1201	3.85	1.64	0.43	1254
22	18	4.11	2.41	0.59	1056	3.94	2.31	0.59	1109	3.78	2.22	0.59	1162	3.64	2.14	0.59	1214
22	20	4.29	2.00	0.47	1109	4.11	1.92	0.47	1175	3.99	1.86	0.47	1201	3.85	1.80	0.47	1254
22	22	4.46	1.55	0.35	1148	4.31	1.49	0.35	1221	4.20	1.46	0.35	1254	4.03	1.40	0.35	1307
23	18	4.11	2.58	0.63	1056	3.94	2.47	0.63	1109	3.78	2.37	0.63	1162	3.64	2.28	0.63	1214
23	20	4.29	2.17	0.51	1109	4.11	2.09	0.51	1175	3.99	2.02	0.51	1201	3.85	1.95	0.51	1254
23	22	4.46	1.73	0.39	1148	4.31	1.67	0.39	1221	4.20	1.63	0.39	1254	4.03	1.56	0.39	1307
24	18	4.11	2.74	0.67	1056	3.94	2.63	0.67	1109	3.78	2.52	0.67	1162	3.64	2.43	0.67	1214
24	20	4.29	2.35	0.55	1109	4.11	2.25	0.55	1175	3.99	2.18	0.55	1201	3.85	2.11	0.55	1254
24	22	4.46	1.91	0.43	1148	4.31	1.84	0.43	1221	4.20	1.79	0.43	1254	4.03	1.72	0.43	1307
24	24	4.69	1.44	0.31	1201	4.52	1.39	0.31	1267	4.41	1.35	0.31	1307	4.27	1.31	0.31	1373
25	18	4.11	2.91	0.71	1056	3.94	2.78	0.71	1109	3.78	2.67	0.71	1162	3.64	2.57	0.71	1214
25	20	4.29	2.52	0.59	1109	4.11	2.41	0.59	1175	3.99	2.34	0.59	1201	3.85	2.26	0.59	1254
25	22	4.46	2.08	0.47	1148	4.31	2.01	0.47	1221	4.20	1.96	0.47	1254	4.03	1.88	0.47	1307
25	24	4.69	1.63	0.35	1201	4.52	1.57	0.35	1267	4.41	1.53	0.35	1307	4.27	1.48	0.35	1373
26	18	4.11	3.07	0.75	1056	3.94	2.94	0.75	1109	3.78	2.82	0.75	1162	3.64	2.72	0.75	1214
26	20	4.29	2.69	0.63	1109	4.11	2.58	0.63	1175	3.99	2.50	0.63	1201	3.85	2.41	0.63	1254
26	22	4.46	2.26	0.51	1148	4.31	2.18	0.51	1221	4.20	2.13	0.51	1254	4.03	2.04	0.51	1307
26	24	4.69	1.82	0.39	1201	4.52	1.75	0.39	1267	4.41	1.71	0.39	1307	4.27	1.65	0.39	1373
26	26	4.83	1.29	0.27	1267	4.69	1.25	0.27	1333	4.62	1.23	0.27	1373	4.48	1.20	0.27	1412
27	18	4.11	3.24	0.79	1056	3.94	3.10	0.79	1109	3.78	2.97	0.79	1162	3.64	2.86	0.79	1214
27	20	4.29	2.86	0.67	1109	4.11	2.74	0.67	1175	3.99	2.66	0.67	1201	3.85	2.57	0.67	1254
27	22	4.46	2.44	0.55	1148	4.31	2.35	0.55	1221	4.20	2.30	0.55	1254	4.03	2.20	0.55	1307
27	24	4.69	2.00	0.43	1201	4.52	1.93	0.43	1267	4.41	1.88	0.43	1307	4.27	1.82	0.43	1373
27	26	4.83	1.48	0.31	1267	4.69	1.44	0.31	1333	4.62	1.42	0.31	1373	4.48	1.38	0.31	1412
28	18	4.11	3.40	0.83	1056	3.94	3.26	0.83	1109	3.78	3.13	0.83	1162	3.64	3.01	0.83	1214
28	20	4.29	3.03	0.71	1109	4.11	2.91	0.71	1175	3.99	2.82	0.71	1201	3.85	2.72	0.71	1254
28	22	4.46	2.62	0.59	1148	4.31	2.53	0.59	1221	4.20	2.47	0.59	1254	4.03	2.36	0.59	1307
28	24	4.69	2.19	0.47	1201	4.52	2.11	0.47	1267	4.41	2.06	0.47	1307	4.27	1.99	0.47	1373
28	26	4.83	1.68	0.35	1267	4.69	1.63	0.35	1333	4.62	1.60	0.35	1373	4.48	1.55	0.35	1412
29	18	4.11	3.57	0.87	1056	3.94	3.41	0.87	1109	3.78	3.28	0.87	1162	3.64	3.16	0.87	1214
29	20	4.29	3.20	0.75	1109	4.11	3.07	0.75	1175	3.99	2.98	0.75	1201	3.85	2.88	0.75	1254
29	22	4.46	2.80	0.63	1148	4.31	2.70	0.63	1221	4.20	2.63	0.63	1254	4.03	2.52	0.63	1307
29	24	4.69	2.38	0.51	1201	4.52	2.29	0.51	1267	4.41	2.24	0.51	1307	4.27	2.16	0.51	1373
29	26	4.83	1.87	0.39	1267	4.69	1.82	0.39	1333	4.62	1.79	0.39	1373	4.48	1.73	0.39	1412
30	18	4.11	3.73	0.91	1056	3.94	3.57	0.91	1109	3.78	3.43	0.91	1162	3.64	3.30	0.91	1214
30	20	4.29	3.37	0.79	1109	4.11	3.24	0.79	1175	3.99	3.14	0.79	1201	3.85	3.03	0.79	1254
30	22	4.46	2.98	0.67	1148	4.31	2.87	0.67	1221	4.20	2.80	0.67	1254	4.03	2.68	0.67	1307
30	24	4.69	2.57	0.55	1201	4.52	2.47	0.55	1267	4.41	2.41	0.55	1307	4.27	2.34	0.55	1373
30	26	4.83	2.06	0.43	1267	4.69	2.00	0.43	1333	4.62	1.97	0.43	1373	4.48	1.91	0.43	1412
31	18	4.11	3.89	0.95	1056	3.94	3.73	0.95	1109	3.78	3.58	0.95	1162	3.64	3.45	0.95	1214
31	20	4.29	3.55	0.83	1109	4.11	3.40	0.83	1175	3.99	3.30	0.83	1201	3.85	3.18	0.83	1254
31	22	4.46	3.15	0.71	1148	4.31	3.04	0.71	1221	4.20	2.97	0.71	1254	4.03	2.85	0.71	1307
31	24	4.69	2.75	0.59	1201	4.52	2.65	0.59	1267	4.41	2.59	0.59	1307	4.27	2.51	0.59	1373
31	26	4.83	2.26	0.47	1267	4.69	2.19	0.47	1333	4.62	2.16	0.47	1373	4.48	2.09	0.47	1412
32	18	4.11	4.06	0.99	1056	3.94	3.89	0.99	1109	3.78	3.73	0.99	1162	3.64	3.59	0.99	1214
32	20	4.29	3.72	0.87	1109	4.11	3.57	0.87	1175	3.99	3.46	0.87	1201	3.85	3.34	0.87	1254
32	22	4.46	3.33	0.75	1148	4.31	3.22	0.75	1221	4.20	3.14	0.75	1254	4.03	3.01	0.75	1307
32	24	4.69	2.94	0.63	1201	4.52	2.83	0.63	1267	4.41	2.77	0.63	1307	4.27	2.68	0.63	1373
32	26	4.83	2.45	0.51	1267	4.69	2.38	0.51	1333	4.62	2.34	0.51	1373	4.48	2.27	0.51	1412

NOTE Q :Total capacity (kW) SHF :Sensible heat factor DB :Dry-bulb temperature
SHC :Sensible heat capacity (kW) INPUT :Total power input (W) WB :Wet-bulb temperature

COOL operation (230V)

MSC-A12WV/YV(Single : Room A) : MUX-A19WV

CAPACITY : 3.5(kW) SHF : 0.73 INPUT : 1320(W)

		OUTDOOR DB(℃)											
INDOOR DB(℃)	INDOOR WB(℃)	35				40				43			
		Q	SHC	SHF	INPUT	Q	SHC	SHF	INPUT	Q	SHC	SHF	INPUT
21	18	3.43	1.88	0.55	1294	3.15	1.72	0.55	1373	3.03	1.66	0.55	1399
21	20	3.61	1.54	0.43	1346	3.36	1.43	0.43	1412	3.24	1.38	0.43	1452
22	18	3.43	2.01	0.59	1294	3.15	1.85	0.59	1373	3.03	1.78	0.59	1399
22	20	3.61	1.68	0.47	1346	3.36	1.57	0.47	1412	3.24	1.51	0.47	1452
22	22	3.82	1.32	0.35	1399	3.57	1.24	0.35	1478	3.45	1.20	0.35	1505
23	18	3.43	2.15	0.63	1294	3.15	1.98	0.63	1373	3.03	1.90	0.63	1399
23	20	3.61	1.83	0.51	1346	3.36	1.70	0.51	1412	3.24	1.64	0.51	1452
23	22	3.82	1.48	0.39	1399	3.57	1.38	0.39	1478	3.45	1.33	0.39	1505
24	18	3.43	2.29	0.67	1294	3.15	2.10	0.67	1373	3.03	2.02	0.67	1399
24	20	3.61	1.97	0.55	1346	3.36	1.84	0.55	1412	3.24	1.77	0.55	1452
24	22	3.82	1.63	0.43	1399	3.57	1.52	0.43	1478	3.45	1.47	0.43	1505
24	24	4.03	1.24	0.31	1452	3.78	1.16	0.31	1518	3.68	1.13	0.31	1551
25	18	3.43	2.43	0.71	1294	3.15	2.23	0.71	1373	3.03	2.14	0.71	1399
25	20	3.61	2.12	0.59	1346	3.36	1.97	0.59	1412	3.24	1.90	0.59	1452
25	22	3.82	1.78	0.47	1399	3.57	1.67	0.47	1478	3.45	1.61	0.47	1505
25	24	4.03	1.40	0.35	1452	3.78	1.31	0.35	1518	3.68	1.28	0.35	1551
26	18	3.43	2.56	0.75	1294	3.15	2.35	0.75	1373	3.03	2.26	0.75	1399
26	20	3.61	2.26	0.63	1346	3.36	2.11	0.63	1412	3.24	2.03	0.63	1452
26	22	3.82	1.93	0.51	1399	3.57	1.81	0.51	1478	3.45	1.75	0.51	1505
26	24	4.03	1.56	0.39	1452	3.78	1.46	0.39	1518	3.68	1.42	0.39	1551
26	26	4.24	1.13	0.27	1505	3.99	1.07	0.27	1571	3.87	1.03	0.27	1604
27	18	3.43	2.70	0.79	1294	3.15	2.48	0.79	1373	3.03	2.38	0.79	1399
27	20	3.61	2.40	0.67	1346	3.36	2.24	0.67	1412	3.24	2.16	0.67	1452
27	22	3.82	2.09	0.55	1399	3.57	1.95	0.55	1478	3.45	1.89	0.55	1505
27	24	4.03	1.72	0.43	1452	3.78	1.61	0.43	1518	3.68	1.57	0.43	1551
27	26	4.24	1.30	0.31	1505	3.99	1.22	0.31	1571	3.87	1.19	0.31	1604
28	18	3.43	2.84	0.83	1294	3.15	2.61	0.83	1373	3.03	2.50	0.83	1399
28	20	3.61	2.55	0.71	1346	3.36	2.38	0.71	1412	3.24	2.29	0.71	1452
28	22	3.82	2.24	0.59	1399	3.57	2.10	0.59	1478	3.45	2.02	0.59	1505
28	24	4.03	1.88	0.47	1452	3.78	1.77	0.47	1518	3.68	1.72	0.47	1551
28	26	4.24	1.47	0.35	1505	3.99	1.38	0.35	1571	3.87	1.34	0.35	1604
29	18	3.43	2.97	0.87	1294	3.15	2.73	0.87	1373	3.03	2.62	0.87	1399
29	20	3.61	2.69	0.75	1346	3.36	2.51	0.75	1412	3.24	2.42	0.75	1452
29	22	3.82	2.39	0.63	1399	3.57	2.24	0.63	1478	3.45	2.16	0.63	1505
29	24	4.03	2.04	0.51	1452	3.78	1.92	0.51	1518	3.68	1.86	0.51	1551
29	26	4.24	1.64	0.39	1505	3.99	1.54	0.39	1571	3.87	1.50	0.39	1604
30	18	3.43	3.11	0.91	1294	3.15	2.86	0.91	1373	3.03	2.75	0.91	1399
30	20	3.61	2.84	0.79	1346	3.36	2.64	0.79	1412	3.24	2.55	0.79	1452
30	22	3.82	2.54	0.67	1399	3.57	2.38	0.67	1478	3.45	2.30	0.67	1505
30	24	4.03	2.20	0.55	1452	3.78	2.07	0.55	1518	3.68	2.01	0.55	1551
30	26	4.24	1.81	0.43	1505	3.99	1.70	0.43	1571	3.87	1.65	0.43	1604
31	18	3.43	3.25	0.95	1294	3.15	2.98	0.95	1373	3.03	2.87	0.95	1399
31	20	3.61	2.98	0.83	1346	3.36	2.78	0.83	1412	3.24	2.68	0.83	1452
31	22	3.82	2.70	0.71	1399	3.57	2.52	0.71	1478	3.45	2.44	0.71	1505
31	24	4.03	2.36	0.59	1452	3.78	2.22	0.59	1518	3.68	2.16	0.59	1551
31	26	4.24	1.98	0.47	1505	3.99	1.86	0.47	1571	3.87	1.81	0.47	1604
32	18	3.43	3.39	0.99	1294	3.15	3.11	0.99	1373	3.03	2.99	0.99	1399
32	20	3.61	3.13	0.87	1346	3.36	2.91	0.87	1412	3.24	2.81	0.87	1452
32	22	3.82	2.85	0.75	1399	3.57	2.67	0.75	1478	3.45	2.58	0.75	1505
32	24	4.03	2.52	0.63	1452	3.78	2.37	0.63	1518	3.68	2.30	0.63	1551
32	26	4.24	2.15	0.51	1505	3.99	2.02	0.51	1571	3.87	1.96	0.51	1604

NOTE Q :Total capacity (kW) SHF :Sensible heat factor DB :Dry-bulb temperature
SHC :Sensible heat capacity (kW) INPUT :Total power input (W) WB :Wet-bulb temperature

COOL operation (230V)

MSC-A09WV/YV(Single : Room A) : MUX-A20WV

CAPACITY : 2.6(kW) SHF : 0.75 INPUT : 850(W)

		OUTDOOR DB(℃)															
INDOOR DB(℃)	INDOOR WB(℃)	21				25				27				30			
		Q	SHC	SHF	INPUT	Q	SHC	SHF	INPUT	Q	SHC	SHF	INPUT	Q	SHC	SHF	INPUT
21	18	3.06	1.74	0.57	680	2.93	1.67	0.57	714	2.81	1.60	0.57	748	2.70	1.54	0.57	782
21	20	3.19	1.43	0.45	714	3.06	1.37	0.45	757	2.96	1.33	0.45	774	2.86	1.29	0.45	808
22	18	3.06	1.86	0.61	680	2.93	1.78	0.61	714	2.81	1.71	0.61	748	2.70	1.65	0.61	782
22	20	3.19	1.56	0.49	714	3.06	1.50	0.49	757	2.96	1.45	0.49	774	2.86	1.40	0.49	808
22	22	3.32	1.23	0.37	740	3.20	1.18	0.37	786	3.12	1.15	0.37	808	2.99	1.11	0.37	842
23	18	3.06	1.99	0.65	680	2.93	1.90	0.65	714	2.81	1.83	0.65	748	2.70	1.76	0.65	782
23	20	3.19	1.69	0.53	714	3.06	1.62	0.53	757	2.96	1.57	0.53	774	2.86	1.52	0.53	808
23	22	3.32	1.36	0.41	740	3.20	1.31	0.41	786	3.12	1.28	0.41	808	2.99	1.23	0.41	842
24	18	3.06	2.11	0.69	680	2.93	2.02	0.69	714	2.81	1.94	0.69	748	2.70	1.87	0.69	782
24	20	3.19	1.82	0.57	714	3.06	1.74	0.57	757	2.96	1.69	0.57	774	2.86	1.63	0.57	808
24	22	3.32	1.49	0.45	740	3.20	1.44	0.45	786	3.12	1.40	0.45	808	2.99	1.35	0.45	842
24	24	3.48	1.15	0.33	774	3.35	1.11	0.33	816	3.28	1.08	0.33	842	3.17	1.05	0.33	884
25	18	3.06	2.23	0.73	680	2.93	2.14	0.73	714	2.81	2.05	0.73	748	2.70	1.97	0.73	782
25	20	3.19	1.94	0.61	714	3.06	1.86	0.61	757	2.96	1.81	0.61	774	2.86	1.74	0.61	808
25	22	3.32	1.62	0.49	740	3.20	1.57	0.49	786	3.12	1.53	0.49	808	2.99	1.47	0.49	842
25	24	3.48	1.29	0.37	774	3.35	1.24	0.37	816	3.28	1.21	0.37	842	3.17	1.17	0.37	884
26	18	3.06	2.35	0.77	680	2.93	2.25	0.77	714	2.81	2.16	0.77	748	2.70	2.08	0.77	782
26	20	3.19	2.07	0.65	714	3.06	1.99	0.65	757	2.96	1.93	0.65	774	2.86	1.86	0.65	808
26	22	3.32	1.76	0.53	740	3.20	1.69	0.53	786	3.12	1.65	0.53	808	2.99	1.58	0.53	842
26	24	3.48	1.43	0.41	774	3.35	1.38	0.41	816	3.28	1.34	0.41	842	3.17	1.30	0.41	884
26	26	3.59	1.04	0.29	816	3.48	1.01	0.29	859	3.43	1.00	0.29	884	3.33	0.97	0.29	910
27	18	3.06	2.47	0.81	680	2.93	2.37	0.81	714	2.81	2.27	0.81	748	2.70	2.19	0.81	782
27	20	3.19	2.20	0.69	714	3.06	2.11	0.69	757	2.96	2.05	0.69	774	2.86	1.97	0.69	808
27	22	3.32	1.89	0.57	740	3.20	1.82	0.57	786	3.12	1.78	0.57	808	2.99	1.70	0.57	842
27	24	3.48	1.57	0.45	774	3.35	1.51	0.45	816	3.28	1.47	0.45	842	3.17	1.43	0.45	884
27	26	3.59	1.18	0.33	816	3.48	1.15	0.33	859	3.43	1.13	0.33	884	3.33	1.10	0.33	910
28	18	3.06	2.60	0.85	680	2.93	2.49	0.85	714	2.81	2.39	0.85	748	2.70	2.30	0.85	782
28	20	3.19	2.33	0.73	714	3.06	2.23	0.73	757	2.96	2.16	0.73	774	2.86	2.09	0.73	808
28	22	3.32	2.02	0.61	740	3.20	1.95	0.61	786	3.12	1.90	0.61	808	2.99	1.82	0.61	842
28	24	3.48	1.71	0.49	774	3.35	1.64	0.49	816	3.28	1.61	0.49	842	3.17	1.55	0.49	884
28	26	3.59	1.33	0.37	816	3.48	1.29	0.37	859	3.43	1.27	0.37	884	3.33	1.23	0.37	910
29	18	3.06	2.72	0.89	680	2.93	2.60	0.89	714	2.81	2.50	0.89	748	2.70	2.41	0.89	782
29	20	3.19	2.45	0.77	714	3.06	2.35	0.77	757	2.96	2.28	0.77	774	2.86	2.20	0.77	808
29	22	3.32	2.15	0.65	740	3.20	2.08	0.65	786	3.12	2.03	0.65	808	2.99	1.94	0.65	842
29	24	3.48	1.85	0.53	774	3.35	1.78	0.53	816	3.28	1.74	0.53	842	3.17	1.68	0.53	884
29	26	3.59	1.47	0.41	816	3.48	1.43	0.41	859	3.43	1.41	0.41	884	3.33	1.36	0.41	910
30	18	3.06	2.84	0.93	680	2.93	2.72	0.93	714	2.81	2.61	0.93	748	2.70	2.51	0.93	782
30	20	3.19	2.58	0.81	714	3.06	2.47	0.81	757	2.96	2.40	0.81	774	2.86	2.32	0.81	808
30	22	3.32	2.29	0.69	740	3.20	2.21	0.69	786	3.12	2.15	0.69	808	2.99	2.06	0.69	842
30	24	3.48	1.99	0.57	774	3.35	1.91	0.57	816	3.28	1.87	0.57	842	3.17	1.81	0.57	884
30	26	3.59	1.61	0.45	816	3.48	1.57	0.45	859	3.43	1.54	0.45	884	3.33	1.50	0.45	910
31	18	3.06	2.96	0.97	680	2.93	2.84	0.97	714	2.81	2.72	0.97	748	2.70	2.62	0.97	782
31	20	3.19	2.71	0.85	714	3.06	2.60	0.85	757	2.96	2.52	0.85	774	2.86	2.43	0.85	808
31	22	3.32	2.42	0.73	740	3.20	2.33	0.73	786	3.12	2.28	0.73	808	2.99	2.18	0.73	842
31	24	3.48	2.13	0.61	774	3.35	2.05	0.61	816	3.28	2.00	0.61	842	3.17	1.93	0.61	884
31	26	3.59	1.76	0.49	816	3.48	1.71	0.49	859	3.43	1.68	0.49	884	3.33	1.63	0.49	910
32	18	3.06	3.09	1.01	680	2.93	2.95	1.01	714	2.81	2.84	1.01	748	2.70	2.73	1.01	782
32	20	3.19	2.83	0.89	714	3.06	2.72	0.89	757	2.96	2.64	0.89	774	2.86	2.55	0.89	808
32	22	3.32	2.55	0.77	740	3.20	2.46	0.77	786	3.12	2.40	0.77	808	2.99	2.30	0.77	842
32	24	3.48	2.26	0.65	774	3.35	2.18	0.65	816	3.28	2.13	0.65	842	3.17	2.06	0.65	884
32	26	3.59	1.90	0.53	816	3.48	1.85	0.53	859	3.43	1.82	0.53	884	3.33	1.76	0.53	910

NOTE Q :Total capacity (kW) SHF :Sensible heat factor DB :Dry-bulb temperature
SHC :Sensible heat capacity (kW) INPUT :Total power input (W) WB :Wet-bulb temperature

COOL operation (230V)

MSC-A09WV/YV(Single : Room A) : MUX-A20WV

CAPACITY : 2.6(kW) SHF : 0.75 INPUT : 850(W)

		OUTDOOR DB(℃)											
INDOOR DB(℃)	INDOOR WB(℃)	35				40				43			
		Q	SHC	SHF	INPUT	Q	SHC	SHF	INPUT	Q	SHC	SHF	INPUT
21	18	2.55	1.45	0.57	833	2.34	1.33	0.57	884	2.25	1.28	0.57	901
21	20	2.68	1.21	0.45	867	2.50	1.12	0.45	910	2.41	1.08	0.45	935
22	18	2.55	1.55	0.61	833	2.34	1.43	0.61	884	2.25	1.37	0.61	901
22	20	2.68	1.31	0.49	867	2.50	1.22	0.49	910	2.41	1.18	0.49	935
22	22	2.83	1.05	0.37	901	2.65	0.98	0.37	952	2.56	0.95	0.37	969
23	18	2.55	1.66	0.65	833	2.34	1.52	0.65	884	2.25	1.46	0.65	901
23	20	2.68	1.42	0.53	867	2.50	1.32	0.53	910	2.41	1.27	0.53	935
23	22	2.83	1.16	0.41	901	2.65	1.09	0.41	952	2.56	1.05	0.41	969
24	18	2.55	1.76	0.69	833	2.34	1.61	0.69	884	2.25	1.55	0.69	901
24	20	2.68	1.53	0.57	867	2.50	1.42	0.57	910	2.41	1.37	0.57	935
24	22	2.83	1.28	0.45	901	2.65	1.19	0.45	952	2.56	1.15	0.45	969
24	24	2.99	0.99	0.33	935	2.81	0.93	0.33	978	2.73	0.90	0.33	999
25	18	2.55	1.86	0.73	833	2.34	1.71	0.73	884	2.25	1.64	0.73	901
25	20	2.68	1.63	0.61	867	2.50	1.52	0.61	910	2.41	1.47	0.61	935
25	22	2.83	1.39	0.49	901	2.65	1.30	0.49	952	2.56	1.25	0.49	969
25	24	2.99	1.11	0.37	935	2.81	1.04	0.37	978	2.73	1.01	0.37	999
26	18	2.55	1.96	0.77	833	2.34	1.80	0.77	884	2.25	1.73	0.77	901
26	20	2.68	1.74	0.65	867	2.50	1.62	0.65	910	2.41	1.56	0.65	935
26	22	2.83	1.50	0.53	901	2.65	1.41	0.53	952	2.56	1.36	0.53	969
26	24	2.99	1.23	0.41	935	2.81	1.15	0.41	978	2.73	1.12	0.41	999
26	26	3.15	0.91	0.29	969	2.96	0.86	0.29	1012	2.87	0.83	0.29	1033
27	18	2.55	2.06	0.81	833	2.34	1.90	0.81	884	2.25	1.82	0.81	901
27	20	2.68	1.85	0.69	867	2.50	1.72	0.69	910	2.41	1.66	0.69	935
27	22	2.83	1.62	0.57	901	2.65	1.51	0.57	952	2.56	1.46	0.57	969
27	24	2.99	1.35	0.45	935	2.81	1.26	0.45	978	2.73	1.23	0.45	999
27	26	3.15	1.04	0.33	969	2.96	0.98	0.33	1012	2.87	0.95	0.33	1033
28	18	2.55	2.17	0.85	833	2.34	1.99	0.85	884	2.25	1.91	0.85	901
28	20	2.68	1.95	0.73	867	2.50	1.82	0.73	910	2.41	1.76	0.73	935
28	22	2.83	1.73	0.61	901	2.65	1.62	0.61	952	2.56	1.56	0.61	969
28	24	2.99	1.47	0.49	935	2.81	1.38	0.49	978	2.73	1.34	0.49	999
28	26	3.15	1.16	0.37	969	2.96	1.10	0.37	1012	2.87	1.06	0.37	1033
29	18	2.55	2.27	0.89	833	2.34	2.08	0.89	884	2.25	2.00	0.89	901
29	20	2.68	2.06	0.77	867	2.50	1.92	0.77	910	2.41	1.85	0.77	935
29	22	2.83	1.84	0.65	901	2.65	1.72	0.65	952	2.56	1.66	0.65	969
29	24	2.99	1.58	0.53	935	2.81	1.49	0.53	978	2.73	1.45	0.53	999
29	26	3.15	1.29	0.41	969	2.96	1.22	0.41	1012	2.87	1.18	0.41	1033
30	18	2.55	2.37	0.93	833	2.34	2.18	0.93	884	2.25	2.09	0.93	901
30	20	2.68	2.17	0.81	867	2.50	2.02	0.81	910	2.41	1.95	0.81	935
30	22	2.83	1.96	0.69	901	2.65	1.83	0.69	952	2.56	1.77	0.69	969
30	24	2.99	1.70	0.57	935	2.81	1.60	0.57	978	2.73	1.56	0.57	999
30	26	3.15	1.42	0.45	969	2.96	1.33	0.45	1012	2.87	1.29	0.45	1033
31	18	2.55	2.47	0.97	833	2.34	2.27	0.97	884	2.25	2.18	0.97	901
31	20	2.68	2.28	0.85	867	2.50	2.12	0.85	910	2.41	2.04	0.85	935
31	22	2.83	2.07	0.73	901	2.65	1.94	0.73	952	2.56	1.87	0.73	969
31	24	2.99	1.82	0.61	935	2.81	1.71	0.61	978	2.73	1.67	0.61	999
31	26	3.15	1.54	0.49	969	2.96	1.45	0.49	1012	2.87	1.41	0.49	1033
32	18	2.55	2.57	1.01	833	2.34	2.36	1.01	884	2.25	2.27	1.01	901
32	20	2.68	2.38	0.89	867	2.50	2.22	0.89	910	2.41	2.14	0.89	935
32	22	2.83	2.18	0.77	901	2.65	2.04	0.77	952	2.56	1.97	0.77	969
32	24	2.99	1.94	0.65	935	2.81	1.83	0.65	978	2.73	1.77	0.65	999
32	26	3.15	1.67	0.53	969	2.96	1.57	0.53	1012	2.87	1.52	0.53	1033

NOTE Q :Total capacity (kW) SHF :Sensible heat factor DB :Dry-bulb temperature
SHC :Sensible heat capacity (kW) INPUT :Total power input (W) WB :Wet-bulb temperature

COOL operation (230V)

MSC-A09WV/YV(Single : Room B) : MUX-A20WV

CAPACITY : 2.9(kW) SHF : 0.71 INPUT : 1110(W)

		OUTDOOR DB(℃)															
INDOOR DB(℃)	INDOOR WB(℃)	21				25				27				30			
		Q	SHC	SHF	INPUT	Q	SHC	SHF	INPUT	Q	SHC	SHF	INPUT	Q	SHC	SHF	INPUT
21	18	3.41	1.82	0.53	888	3.26	1.74	0.53	932	3.13	1.67	0.53	977	3.02	1.61	0.53	1021
21	20	3.55	1.47	0.41	932	3.41	1.41	0.41	988	3.31	1.37	0.41	1010	3.19	1.32	0.41	1055
22	18	3.41	1.95	0.57	888	3.26	1.87	0.57	932	3.13	1.79	0.57	977	3.02	1.73	0.57	1021
22	20	3.55	1.61	0.45	932	3.41	1.54	0.45	988	3.31	1.50	0.45	1010	3.19	1.45	0.45	1055
22	22	3.70	1.23	0.33	966	3.57	1.19	0.33	1027	3.48	1.16	0.33	1055	3.34	1.11	0.33	1099
23	18	3.41	2.09	0.61	888	3.26	2.00	0.61	932	3.13	1.92	0.61	977	3.02	1.85	0.61	1021
23	20	3.55	1.75	0.49	932	3.41	1.68	0.49	988	3.31	1.63	0.49	1010	3.19	1.57	0.49	1055
23	22	3.70	1.38	0.37	966	3.57	1.33	0.37	1027	3.48	1.30	0.37	1055	3.34	1.24	0.37	1099
24	18	3.41	2.23	0.65	888	3.26	2.13	0.65	932	3.13	2.05	0.65	977	3.02	1.97	0.65	1021
24	20	3.55	1.89	0.53	932	3.41	1.82	0.53	988	3.31	1.76	0.53	1010	3.19	1.70	0.53	1055
24	22	3.70	1.53	0.41	966	3.57	1.47	0.41	1027	3.48	1.44	0.41	1055	3.34	1.38	0.41	1099
24	24	3.89	1.14	0.29	1010	3.74	1.10	0.29	1066	3.65	1.07	0.29	1099	3.54	1.04	0.29	1154
25	18	3.41	2.36	0.69	888	3.26	2.26	0.69	932	3.13	2.17	0.69	977	3.02	2.09	0.69	1021
25	20	3.55	2.04	0.57	932	3.41	1.95	0.57	988	3.31	1.89	0.57	1010	3.19	1.83	0.57	1055
25	22	3.70	1.67	0.45	966	3.57	1.62	0.45	1027	3.48	1.58	0.45	1055	3.34	1.51	0.45	1099
25	24	3.89	1.29	0.33	1010	3.74	1.25	0.33	1066	3.65	1.22	0.33	1099	3.54	1.18	0.33	1154
26	18	3.41	2.50	0.73	888	3.26	2.39	0.73	932	3.13	2.30	0.73	977	3.02	2.21	0.73	1021
26	20	3.55	2.18	0.61	932	3.41	2.09	0.61	988	3.31	2.03	0.61	1010	3.19	1.96	0.61	1055
26	22	3.70	1.82	0.49	966	3.57	1.76	0.49	1027	3.48	1.72	0.49	1055	3.34	1.64	0.49	1099
26	24	3.89	1.45	0.37	1010	3.74	1.40	0.37	1066	3.65	1.36	0.37	1099	3.54	1.32	0.37	1154
26	26	4.00	1.01	0.25	1066	3.89	0.98	0.25	1121	3.83	0.97	0.25	1154	3.71	0.94	0.25	1188
27	18	3.41	2.63	0.77	888	3.26	2.52	0.77	932	3.13	2.42	0.77	977	3.02	2.33	0.77	1021
27	20	3.55	2.32	0.65	932	3.41	2.23	0.65	988	3.31	2.16	0.65	1010	3.19	2.08	0.65	1055
27	22	3.70	1.97	0.53	966	3.57	1.90	0.53	1027	3.48	1.85	0.53	1055	3.34	1.78	0.53	1099
27	24	3.89	1.60	0.41	1010	3.74	1.55	0.41	1066	3.65	1.51	0.41	1099	3.54	1.46	0.41	1154
27	26	4.00	1.17	0.29	1066	3.89	1.14	0.29	1121	3.83	1.12	0.29	1154	3.71	1.09	0.29	1188
28	18	3.41	2.77	0.81	888	3.26	2.65	0.81	932	3.13	2.55	0.81	977	3.02	2.45	0.81	1021
28	20	3.55	2.46	0.69	932	3.41	2.36	0.69	988	3.31	2.29	0.69	1010	3.19	2.21	0.69	1055
28	22	3.70	2.12	0.57	966	3.57	2.04	0.57	1027	3.48	1.99	0.57	1055	3.34	1.91	0.57	1099
28	24	3.89	1.76	0.45	1010	3.74	1.69	0.45	1066	3.65	1.66	0.45	1099	3.54	1.60	0.45	1154
28	26	4.00	1.33	0.33	1066	3.89	1.29	0.33	1121	3.83	1.27	0.33	1154	3.71	1.24	0.33	1188
29	18	3.41	2.91	0.85	888	3.26	2.78	0.85	932	3.13	2.67	0.85	977	3.02	2.57	0.85	1021
29	20	3.55	2.60	0.73	932	3.41	2.50	0.73	988	3.31	2.42	0.73	1010	3.19	2.34	0.73	1055
29	22	3.70	2.27	0.61	966	3.57	2.19	0.61	1027	3.48	2.13	0.61	1055	3.34	2.04	0.61	1099
29	24	3.89	1.92	0.49	1010	3.74	1.84	0.49	1066	3.65	1.80	0.49	1099	3.54	1.74	0.49	1154
29	26	4.00	1.49	0.37	1066	3.89	1.45	0.37	1121	3.83	1.43	0.37	1154	3.71	1.38	0.37	1188
30	18	3.41	3.04	0.89	888	3.26	2.91	0.89	932	3.13	2.80	0.89	977	3.02	2.69	0.89	1021
30	20	3.55	2.75	0.77	932	3.41	2.63	0.77	988	3.31	2.56	0.77	1010	3.19	2.47	0.77	1055
30	22	3.70	2.41	0.65	966	3.57	2.33	0.65	1027	3.48	2.27	0.65	1055	3.34	2.18	0.65	1099
30	24	3.89	2.07	0.53	1010	3.74	1.99	0.53	1066	3.65	1.95	0.53	1099	3.54	1.89	0.53	1154
30	26	4.00	1.65	0.41	1066	3.89	1.60	0.41	1121	3.83	1.58	0.41	1154	3.71	1.53	0.41	1188
31	18	3.41	3.18	0.93	888	3.26	3.04	0.93	932	3.13	2.92	0.93	977	3.02	2.81	0.93	1021
31	20	3.55	2.89	0.81	932	3.41	2.77	0.81	988	3.31	2.69	0.81	1010	3.19	2.59	0.81	1055
31	22	3.70	2.56	0.69	966	3.57	2.47	0.69	1027	3.48	2.41	0.69	1055	3.34	2.31	0.69	1099
31	24	3.89	2.23	0.57	1010	3.74	2.14	0.57	1066	3.65	2.09	0.57	1099	3.54	2.03	0.57	1154
31	26	4.00	1.81	0.45	1066	3.89	1.76	0.45	1121	3.83	1.73	0.45	1154	3.71	1.68	0.45	1188
32	18	3.41	3.32	0.97	888	3.26	3.17	0.97	932	3.13	3.05	0.97	977	3.02	2.93	0.97	1021
32	20	3.55	3.03	0.85	932	3.41	2.91	0.85	988	3.31	2.82	0.85	1010	3.19	2.72	0.85	1055
32	22	3.70	2.71	0.73	966	3.57	2.61	0.73	1027	3.48	2.55	0.73	1055	3.34	2.44	0.73	1099
32	24	3.89	2.38	0.61	1010	3.74	2.29	0.61	1066	3.65	2.24	0.61	1099	3.54	2.17	0.61	1154
32	26	4.00	1.97	0.49	1066	3.89	1.92	0.49	1121	3.83	1.89	0.49	1154	3.71	1.83	0.49	1188

NOTE Q :Total capacity (kW) SHF :Sensible heat factor DB :Dry-bulb temperature
SHC :Sensible heat capacity (kW) INPUT :Total power input (W) WB :Wet-bulb temperature

COOL operation (230V)

MSC-A09WV/YV(Single : Room B) : MUX-A20WV

CAPACITY : 2.9(kW) SHF : 0.71 INPUT : 1110(W)

		OUTDOOR DB(℃)											
INDOOR DB(℃)	INDOOR WB(℃)	35				40				43			
		Q	SHC	SHF	INPUT	Q	SHC	SHF	INPUT	Q	SHC	SHF	INPUT
21	18	2.84	1.51	0.53	1088	2.61	1.39	0.53	1154	2.51	1.34	0.53	1177
21	20	2.99	1.23	0.41	1132	2.78	1.15	0.41	1188	2.68	1.11	0.41	1221
22	18	2.84	1.63	0.57	1088	2.61	1.50	0.57	1154	2.51	1.44	0.57	1177
22	20	2.99	1.35	0.45	1132	2.78	1.26	0.45	1188	2.68	1.22	0.45	1221
22	22	3.16	1.05	0.33	1177	2.96	0.99	0.33	1243	2.86	0.95	0.33	1265
23	18	2.84	1.74	0.61	1088	2.61	1.60	0.61	1154	2.51	1.54	0.61	1177
23	20	2.99	1.47	0.49	1132	2.78	1.37	0.49	1188	2.68	1.32	0.49	1221
23	22	3.16	1.18	0.37	1177	2.96	1.10	0.37	1243	2.86	1.07	0.37	1265
24	18	2.84	1.86	0.65	1088	2.61	1.70	0.65	1154	2.51	1.64	0.65	1177
24	20	2.99	1.59	0.53	1132	2.78	1.48	0.53	1188	2.68	1.43	0.53	1221
24	22	3.16	1.31	0.41	1177	2.96	1.22	0.41	1243	2.86	1.18	0.41	1265
24	24	3.34	0.98	0.29	1221	3.13	0.92	0.29	1277	3.05	0.89	0.29	1304
25	18	2.84	1.97	0.69	1088	2.61	1.81	0.69	1154	2.51	1.74	0.69	1177
25	20	2.99	1.71	0.57	1132	2.78	1.60	0.57	1188	2.68	1.54	0.57	1221
25	22	3.16	1.43	0.45	1177	2.96	1.34	0.45	1243	2.86	1.29	0.45	1265
25	24	3.34	1.11	0.33	1221	3.13	1.04	0.33	1277	3.05	1.01	0.33	1304
26	18	2.84	2.08	0.73	1088	2.61	1.91	0.73	1154	2.51	1.84	0.73	1177
26	20	2.99	1.83	0.61	1132	2.78	1.71	0.61	1188	2.68	1.64	0.61	1221
26	22	3.16	1.56	0.49	1177	2.96	1.46	0.49	1243	2.86	1.41	0.49	1265
26	24	3.34	1.24	0.37	1221	3.13	1.17	0.37	1277	3.05	1.14	0.37	1304
26	26	3.51	0.89	0.25	1265	3.31	0.84	0.25	1321	3.20	0.81	0.25	1349
27	18	2.84	2.20	0.77	1088	2.61	2.02	0.77	1154	2.51	1.94	0.77	1177
27	20	2.99	1.95	0.65	1132	2.78	1.82	0.65	1188	2.68	1.75	0.65	1221
27	22	3.16	1.68	0.53	1177	2.96	1.58	0.53	1243	2.86	1.52	0.53	1265
27	24	3.34	1.38	0.41	1221	3.13	1.29	0.41	1277	3.05	1.26	0.41	1304
27	26	3.51	1.03	0.29	1265	3.31	0.97	0.29	1321	3.20	0.94	0.29	1349
28	18	2.84	2.31	0.81	1088	2.61	2.12	0.81	1154	2.51	2.04	0.81	1177
28	20	2.99	2.07	0.69	1132	2.78	1.93	0.69	1188	2.68	1.86	0.69	1221
28	22	3.16	1.81	0.57	1177	2.96	1.69	0.57	1243	2.86	1.64	0.57	1265
28	24	3.34	1.51	0.45	1221	3.13	1.42	0.45	1277	3.05	1.38	0.45	1304
28	26	3.51	1.17	0.33	1265	3.31	1.10	0.33	1321	3.20	1.07	0.33	1349
29	18	2.84	2.42	0.85	1088	2.61	2.23	0.85	1154	2.51	2.14	0.85	1177
29	20	2.99	2.19	0.73	1132	2.78	2.04	0.73	1188	2.68	1.97	0.73	1221
29	22	3.16	1.94	0.61	1177	2.96	1.81	0.61	1243	2.86	1.75	0.61	1265
29	24	3.34	1.64	0.49	1221	3.13	1.54	0.49	1277	3.05	1.50	0.49	1304
29	26	3.51	1.31	0.37	1265	3.31	1.23	0.37	1321	3.20	1.20	0.37	1349
30	18	2.84	2.54	0.89	1088	2.61	2.33	0.89	1154	2.51	2.24	0.89	1177
30	20	2.99	2.31	0.77	1132	2.78	2.15	0.77	1188	2.68	2.07	0.77	1221
30	22	3.16	2.06	0.65	1177	2.96	1.93	0.65	1243	2.86	1.87	0.65	1265
30	24	3.34	1.78	0.53	1221	3.13	1.67	0.53	1277	3.05	1.62	0.53	1304
30	26	3.51	1.45	0.41	1265	3.31	1.37	0.41	1321	3.20	1.32	0.41	1349
31	18	2.84	2.65	0.93	1088	2.61	2.44	0.93	1154	2.51	2.34	0.93	1177
31	20	2.99	2.43	0.81	1132	2.78	2.26	0.81	1188	2.68	2.18	0.81	1221
31	22	3.16	2.19	0.69	1177	2.96	2.05	0.69	1243	2.86	1.98	0.69	1265
31	24	3.34	1.91	0.57	1221	3.13	1.79	0.57	1277	3.05	1.74	0.57	1304
31	26	3.51	1.59	0.45	1265	3.31	1.50	0.45	1321	3.20	1.45	0.45	1349
32	18	2.84	2.77	0.97	1088	2.61	2.54	0.97	1154	2.51	2.44	0.97	1177
32	20	2.99	2.55	0.85	1132	2.78	2.37	0.85	1188	2.68	2.29	0.85	1221
32	22	3.16	2.32	0.73	1177	2.96	2.17	0.73	1243	2.86	2.09	0.73	1265
32	24	3.34	2.04	0.61	1221	3.13	1.92	0.61	1277	3.05	1.87	0.61	1304
32	26	3.51	1.73	0.49	1265	3.31	1.63	0.49	1321	3.20	1.58	0.49	1349

NOTE Q :Total capacity (kW) SHF :Sensible heat factor DB :Dry-bulb temperature
SHC :Sensible heat capacity (kW) INPUT :Total power input (W) WB :Wet-bulb temperature

COOL operation (230V)

MSC-A12WV/YV(Single : Room A) : MUX-A22WV

CAPACITY : 3.5(kW) SHF : 0.73 INPUT : 1320(W)

		OUTDOOR DB(℃)															
INDOOR DB(℃)	INDOOR WB(℃)	21				25				27				30			
		Q	SHC	SHF	INPUT	Q	SHC	SHF	INPUT	Q	SHC	SHF	INPUT	Q	SHC	SHF	INPUT
21	18	4.11	2.25	0.55	1056	3.94	2.15	0.55	1109	3.78	2.07	0.55	1162	3.64	1.99	0.55	1214
21	20	4.29	1.83	0.43	1109	4.11	1.76	0.43	1175	3.99	1.70	0.43	1201	3.85	1.64	0.43	1254
22	18	4.11	2.41	0.59	1056	3.94	2.31	0.59	1109	3.78	2.22	0.59	1162	3.64	2.14	0.59	1214
22	20	4.29	2.00	0.47	1109	4.11	1.92	0.47	1175	3.99	1.86	0.47	1201	3.85	1.80	0.47	1254
22	22	4.46	1.55	0.35	1148	4.31	1.49	0.35	1221	4.20	1.46	0.35	1254	4.03	1.40	0.35	1307
23	18	4.11	2.58	0.63	1056	3.94	2.47	0.63	1109	3.78	2.37	0.63	1162	3.64	2.28	0.63	1214
23	20	4.29	2.17	0.51	1109	4.11	2.09	0.51	1175	3.99	2.02	0.51	1201	3.85	1.95	0.51	1254
23	22	4.46	1.73	0.39	1148	4.31	1.67	0.39	1221	4.20	1.63	0.39	1254	4.03	1.56	0.39	1307
24	18	4.11	2.74	0.67	1056	3.94	2.63	0.67	1109	3.78	2.52	0.67	1162	3.64	2.43	0.67	1214
24	20	4.29	2.35	0.55	1109	4.11	2.25	0.55	1175	3.99	2.18	0.55	1201	3.85	2.11	0.55	1254
24	22	4.46	1.91	0.43	1148	4.31	1.84	0.43	1221	4.20	1.79	0.43	1254	4.03	1.72	0.43	1307
24	24	4.69	1.44	0.31	1201	4.52	1.39	0.31	1267	4.41	1.35	0.31	1307	4.27	1.31	0.31	1373
25	18	4.11	2.91	0.71	1056	3.94	2.78	0.71	1109	3.78	2.67	0.71	1162	3.64	2.57	0.71	1214
25	20	4.29	2.52	0.59	1109	4.11	2.41	0.59	1175	3.99	2.34	0.59	1201	3.85	2.26	0.59	1254
25	22	4.46	2.08	0.47	1148	4.31	2.01	0.47	1221	4.20	1.96	0.47	1254	4.03	1.88	0.47	1307
25	24	4.69	1.63	0.35	1201	4.52	1.57	0.35	1267	4.41	1.53	0.35	1307	4.27	1.48	0.35	1373
26	18	4.11	3.07	0.75	1056	3.94	2.94	0.75	1109	3.78	2.82	0.75	1162	3.64	2.72	0.75	1214
26	20	4.29	2.69	0.63	1109	4.11	2.58	0.63	1175	3.99	2.50	0.63	1201	3.85	2.41	0.63	1254
26	22	4.46	2.26	0.51	1148	4.31	2.18	0.51	1221	4.20	2.13	0.51	1254	4.03	2.04	0.51	1307
26	24	4.69	1.82	0.39	1201	4.52	1.75	0.39	1267	4.41	1.71	0.39	1307	4.27	1.65	0.39	1373
26	26	4.83	1.29	0.27	1267	4.69	1.25	0.27	1333	4.62	1.23	0.27	1373	4.48	1.20	0.27	1412
27	18	4.11	3.24	0.79	1056	3.94	3.10	0.79	1109	3.78	2.97	0.79	1162	3.64	2.86	0.79	1214
27	20	4.29	2.86	0.67	1109	4.11	2.74	0.67	1175	3.99	2.66	0.67	1201	3.85	2.57	0.67	1254
27	22	4.46	2.44	0.55	1148	4.31	2.35	0.55	1221	4.20	2.30	0.55	1254	4.03	2.20	0.55	1307
27	24	4.69	2.00	0.43	1201	4.52	1.93	0.43	1267	4.41	1.88	0.43	1307	4.27	1.82	0.43	1373
27	26	4.83	1.48	0.31	1267	4.69	1.44	0.31	1333	4.62	1.42	0.31	1373	4.48	1.38	0.31	1412
28	18	4.11	3.40	0.83	1056	3.94	3.26	0.83	1109	3.78	3.13	0.83	1162	3.64	3.01	0.83	1214
28	20	4.29	3.03	0.71	1109	4.11	2.91	0.71	1175	3.99	2.82	0.71	1201	3.85	2.72	0.71	1254
28	22	4.46	2.62	0.59	1148	4.31	2.53	0.59	1221	4.20	2.47	0.59	1254	4.03	2.36	0.59	1307
28	24	4.69	2.19	0.47	1201	4.52	2.11	0.47	1267	4.41	2.06	0.47	1307	4.27	1.99	0.47	1373
28	26	4.83	1.68	0.35	1267	4.69	1.63	0.35	1333	4.62	1.60	0.35	1373	4.48	1.55	0.35	1412
29	18	4.11	3.57	0.87	1056	3.94	3.41	0.87	1109	3.78	3.28	0.87	1162	3.64	3.16	0.87	1214
29	20	4.29	3.20	0.75	1109	4.11	3.07	0.75	1175	3.99	2.98	0.75	1201	3.85	2.88	0.75	1254
29	22	4.46	2.80	0.63	1148	4.31	2.70	0.63	1221	4.20	2.63	0.63	1254	4.03	2.52	0.63	1307
29	24	4.69	2.38	0.51	1201	4.52	2.29	0.51	1267	4.41	2.24	0.51	1307	4.27	2.16	0.51	1373
29	26	4.83	1.87	0.39	1267	4.69	1.82	0.39	1333	4.62	1.79	0.39	1373	4.48	1.73	0.39	1412
30	18	4.11	3.73	0.91	1056	3.94	3.57	0.91	1109	3.78	3.43	0.91	1162	3.64	3.30	0.91	1214
30	20	4.29	3.37	0.79	1109	4.11	3.24	0.79	1175	3.99	3.14	0.79	1201	3.85	3.03	0.79	1254
30	22	4.46	2.98	0.67	1148	4.31	2.87	0.67	1221	4.20	2.80	0.67	1254	4.03	2.68	0.67	1307
30	24	4.69	2.57	0.55	1201	4.52	2.47	0.55	1267	4.41	2.41	0.55	1307	4.27	2.34	0.55	1373
30	26	4.83	2.06	0.43	1267	4.69	2.00	0.43	1333	4.62	1.97	0.43	1373	4.48	1.91	0.43	1412
31	18	4.11	3.89	0.95	1056	3.94	3.73	0.95	1109	3.78	3.58	0.95	1162	3.64	3.45	0.95	1214
31	20	4.29	3.55	0.83	1109	4.11	3.40	0.83	1175	3.99	3.30	0.83	1201	3.85	3.18	0.83	1254
31	22	4.46	3.15	0.71	1148	4.31	3.04	0.71	1221	4.20	2.97	0.71	1254	4.03	2.85	0.71	1307
31	24	4.69	2.75	0.59	1201	4.52	2.65	0.59	1267	4.41	2.59	0.59	1307	4.27	2.51	0.59	1373
31	26	4.83	2.26	0.47	1267	4.69	2.19	0.47	1333	4.62	2.16	0.47	1373	4.48	2.09	0.47	1412
32	18	4.11	4.06	0.99	1056	3.94	3.89	0.99	1109	3.78	3.73	0.99	1162	3.64	3.59	0.99	1214
32	20	4.29	3.72	0.87	1109	4.11	3.57	0.87	1175	3.99	3.46	0.87	1201	3.85	3.34	0.87	1254
32	22	4.46	3.33	0.75	1148	4.31	3.22	0.75	1221	4.20	3.14	0.75	1254	4.03	3.01	0.75	1307
32	24	4.69	2.94	0.63	1201	4.52	2.83	0.63	1267	4.41	2.77	0.63	1307	4.27	2.68	0.63	1373
32	26	4.83	2.45	0.51	1267	4.69	2.38	0.51	1333	4.62	2.34	0.51	1373	4.48	2.27	0.51	1412

NOTE Q :Total capacity (kW) SHF :Sensible heat factor DB :Dry-bulb temperature
SHC :Sensible heat capacity (kW) INPUT :Total power input (W) WB :Wet-bulb temperature

COOL operation (230V)

MSC-A12WV/YV(Single : Room A) : MUX-A22WV

CAPACITY : 3.5(kW) SHF : 0.73 INPUT : 1320(W)

		OUTDOOR DB(℃)											
INDOOR DB(℃)	INDOOR WB(℃)	35				40				43			
		Q	SHC	SHF	INPUT	Q	SHC	SHF	INPUT	Q	SHC	SHF	INPUT
21	18	3.43	1.88	0.55	1294	3.15	1.72	0.55	1373	3.03	1.66	0.55	1399
21	20	3.61	1.54	0.43	1346	3.36	1.43	0.43	1412	3.24	1.38	0.43	1452
22	18	3.43	2.01	0.59	1294	3.15	1.85	0.59	1373	3.03	1.78	0.59	1399
22	20	3.61	1.68	0.47	1346	3.36	1.57	0.47	1412	3.24	1.51	0.47	1452
22	22	3.82	1.32	0.35	1399	3.57	1.24	0.35	1478	3.45	1.20	0.35	1505
23	18	3.43	2.15	0.63	1294	3.15	1.98	0.63	1373	3.03	1.90	0.63	1399
23	20	3.61	1.83	0.51	1346	3.36	1.70	0.51	1412	3.24	1.64	0.51	1452
23	22	3.82	1.48	0.39	1399	3.57	1.38	0.39	1478	3.45	1.33	0.39	1505
24	18	3.43	2.29	0.67	1294	3.15	2.10	0.67	1373	3.03	2.02	0.67	1399
24	20	3.61	1.97	0.55	1346	3.36	1.84	0.55	1412	3.24	1.77	0.55	1452
24	22	3.82	1.63	0.43	1399	3.57	1.52	0.43	1478	3.45	1.47	0.43	1505
24	24	4.03	1.24	0.31	1452	3.78	1.16	0.31	1518	3.68	1.13	0.31	1551
25	18	3.43	2.43	0.71	1294	3.15	2.23	0.71	1373	3.03	2.14	0.71	1399
25	20	3.61	2.12	0.59	1346	3.36	1.97	0.59	1412	3.24	1.90	0.59	1452
25	22	3.82	1.78	0.47	1399	3.57	1.67	0.47	1478	3.45	1.61	0.47	1505
25	24	4.03	1.40	0.35	1452	3.78	1.31	0.35	1518	3.68	1.28	0.35	1551
26	18	3.43	2.56	0.75	1294	3.15	2.35	0.75	1373	3.03	2.26	0.75	1399
26	20	3.61	2.26	0.63	1346	3.36	2.11	0.63	1412	3.24	2.03	0.63	1452
26	22	3.82	1.93	0.51	1399	3.57	1.81	0.51	1478	3.45	1.75	0.51	1505
26	24	4.03	1.56	0.39	1452	3.78	1.46	0.39	1518	3.68	1.42	0.39	1551
26	26	4.24	1.13	0.27	1505	3.99	1.07	0.27	1571	3.87	1.03	0.27	1604
27	18	3.43	2.70	0.79	1294	3.15	2.48	0.79	1373	3.03	2.38	0.79	1399
27	20	3.61	2.40	0.67	1346	3.36	2.24	0.67	1412	3.24	2.16	0.67	1452
27	22	3.82	2.09	0.55	1399	3.57	1.95	0.55	1478	3.45	1.89	0.55	1505
27	24	4.03	1.72	0.43	1452	3.78	1.61	0.43	1518	3.68	1.57	0.43	1551
27	26	4.24	1.30	0.31	1505	3.99	1.22	0.31	1571	3.87	1.19	0.31	1604
28	18	3.43	2.84	0.83	1294	3.15	2.61	0.83	1373	3.03	2.50	0.83	1399
28	20	3.61	2.55	0.71	1346	3.36	2.38	0.71	1412	3.24	2.29	0.71	1452
28	22	3.82	2.24	0.59	1399	3.57	2.10	0.59	1478	3.45	2.02	0.59	1505
28	24	4.03	1.88	0.47	1452	3.78	1.77	0.47	1518	3.68	1.72	0.47	1551
28	26	4.24	1.47	0.35	1505	3.99	1.38	0.35	1571	3.87	1.34	0.35	1604
29	18	3.43	2.97	0.87	1294	3.15	2.73	0.87	1373	3.03	2.62	0.87	1399
29	20	3.61	2.69	0.75	1346	3.36	2.51	0.75	1412	3.24	2.42	0.75	1452
29	22	3.82	2.39	0.63	1399	3.57	2.24	0.63	1478	3.45	2.16	0.63	1505
29	24	4.03	2.04	0.51	1452	3.78	1.92	0.51	1518	3.68	1.86	0.51	1551
29	26	4.24	1.64	0.39	1505	3.99	1.54	0.39	1571	3.87	1.50	0.39	1604
30	18	3.43	3.11	0.91	1294	3.15	2.86	0.91	1373	3.03	2.75	0.91	1399
30	20	3.61	2.84	0.79	1346	3.36	2.64	0.79	1412	3.24	2.55	0.79	1452
30	22	3.82	2.54	0.67	1399	3.57	2.38	0.67	1478	3.45	2.30	0.67	1505
30	24	4.03	2.20	0.55	1452	3.78	2.07	0.55	1518	3.68	2.01	0.55	1551
30	26	4.24	1.81	0.43	1505	3.99	1.70	0.43	1571	3.87	1.65	0.43	1604
31	18	3.43	3.25	0.95	1294	3.15	2.98	0.95	1373	3.03	2.87	0.95	1399
31	20	3.61	2.98	0.83	1346	3.36	2.78	0.83	1412	3.24	2.68	0.83	1452
31	22	3.82	2.70	0.71	1399	3.57	2.52	0.71	1478	3.45	2.44	0.71	1505
31	24	4.03	2.36	0.59	1452	3.78	2.22	0.59	1518	3.68	2.16	0.59	1551
31	26	4.24	1.98	0.47	1505	3.99	1.86	0.47	1571	3.87	1.81	0.47	1604
32	18	3.43	3.39	0.99	1294	3.15	3.11	0.99	1373	3.03	2.99	0.99	1399
32	20	3.61	3.13	0.87	1346	3.36	2.91	0.87	1412	3.24	2.81	0.87	1452
32	22	3.82	2.85	0.75	1399	3.57	2.67	0.75	1478	3.45	2.58	0.75	1505
32	24	4.03	2.52	0.63	1452	3.78	2.37	0.63	1518	3.68	2.30	0.63	1551
32	26	4.24	2.15	0.51	1505	3.99	2.02	0.51	1571	3.87	1.96	0.51	1604

NOTE Q :Total capacity (kW) SHF :Sensible heat factor DB :Dry-bulb temperature
SHC :Sensible heat capacity (kW) INPUT :Total power input (W) WB :Wet-bulb temperature

COOL operation (230V)

MSC-A07WV/YV(Single : Room B or C) : MUX-A22WV

CAPACITY : 2.4(kW) SHF : 0.74 INPUT : 850(W)

		OUTDOOR DB(℃)															
INDOOR DB(℃)	INDOOR WB(℃)	21				25				27				30			
		Q	SHC	SHF	INPUT	Q	SHC	SHF	INPUT	Q	SHC	SHF	INPUT	Q	SHC	SHF	INPUT
21	18	2.82	1.58	0.56	680	2.70	1.51	0.56	714	2.59	1.45	0.56	748	2.50	1.40	0.56	782
21	20	2.94	1.29	0.44	714	2.82	1.24	0.44	757	2.74	1.20	0.44	774	2.64	1.16	0.44	808
22	18	2.82	1.69	0.60	680	2.70	1.62	0.60	714	2.59	1.56	0.60	748	2.50	1.50	0.60	782
22	20	2.94	1.41	0.48	714	2.82	1.35	0.48	757	2.74	1.31	0.48	774	2.64	1.27	0.48	808
22	22	3.06	1.10	0.36	740	2.95	1.06	0.36	786	2.88	1.04	0.36	808	2.76	0.99	0.36	842
23	18	2.82	1.80	0.64	680	2.70	1.73	0.64	714	2.59	1.66	0.64	748	2.50	1.60	0.64	782
23	20	2.94	1.53	0.52	714	2.82	1.47	0.52	757	2.74	1.42	0.52	774	2.64	1.37	0.52	808
23	22	3.06	1.22	0.40	740	2.95	1.18	0.40	786	2.88	1.15	0.40	808	2.76	1.10	0.40	842
24	18	2.82	1.92	0.68	680	2.70	1.84	0.68	714	2.59	1.76	0.68	748	2.50	1.70	0.68	782
24	20	2.94	1.65	0.56	714	2.82	1.58	0.56	757	2.74	1.53	0.56	774	2.64	1.48	0.56	808
24	22	3.06	1.35	0.44	740	2.95	1.30	0.44	786	2.88	1.27	0.44	808	2.76	1.21	0.44	842
24	24	3.22	1.03	0.32	774	3.10	0.99	0.32	816	3.02	0.97	0.32	842	2.93	0.94	0.32	884
25	18	2.82	2.03	0.72	680	2.70	1.94	0.72	714	2.59	1.87	0.72	748	2.50	1.80	0.72	782
25	20	2.94	1.76	0.60	714	2.82	1.69	0.60	757	2.74	1.64	0.60	774	2.64	1.58	0.60	808
25	22	3.06	1.47	0.48	740	2.95	1.42	0.48	786	2.88	1.38	0.48	808	2.76	1.32	0.48	842
25	24	3.22	1.16	0.36	774	3.10	1.11	0.36	816	3.02	1.09	0.36	842	2.93	1.05	0.36	884
26	18	2.82	2.14	0.76	680	2.70	2.05	0.76	714	2.59	1.97	0.76	748	2.50	1.90	0.76	782
26	20	2.94	1.88	0.64	714	2.82	1.80	0.64	757	2.74	1.75	0.64	774	2.64	1.69	0.64	808
26	22	3.06	1.59	0.52	740	2.95	1.54	0.52	786	2.88	1.50	0.52	808	2.76	1.44	0.52	842
26	24	3.22	1.29	0.40	774	3.10	1.24	0.40	816	3.02	1.21	0.40	842	2.93	1.17	0.40	884
26	26	3.31	0.93	0.28	816	3.22	0.90	0.28	859	3.17	0.89	0.28	884	3.07	0.86	0.28	910
27	18	2.82	2.26	0.80	680	2.70	2.16	0.80	714	2.59	2.07	0.80	748	2.50	2.00	0.80	782
27	20	2.94	2.00	0.68	714	2.82	1.92	0.68	757	2.74	1.86	0.68	774	2.64	1.80	0.68	808
27	22	3.06	1.71	0.56	740	2.95	1.65	0.56	786	2.88	1.61	0.56	808	2.76	1.55	0.56	842
27	24	3.22	1.42	0.44	774	3.10	1.36	0.44	816	3.02	1.33	0.44	842	2.93	1.29	0.44	884
27	26	3.31	1.06	0.32	816	3.22	1.03	0.32	859	3.17	1.01	0.32	884	3.07	0.98	0.32	910
28	18	2.82	2.37	0.84	680	2.70	2.27	0.84	714	2.59	2.18	0.84	748	2.50	2.10	0.84	782
28	20	2.94	2.12	0.72	714	2.82	2.03	0.72	757	2.74	1.97	0.72	774	2.64	1.90	0.72	808
28	22	3.06	1.84	0.60	740	2.95	1.77	0.60	786	2.88	1.73	0.60	808	2.76	1.66	0.60	842
28	24	3.22	1.54	0.48	774	3.10	1.49	0.48	816	3.02	1.45	0.48	842	2.93	1.41	0.48	884
28	26	3.31	1.19	0.36	816	3.22	1.16	0.36	859	3.17	1.14	0.36	884	3.07	1.11	0.36	910
29	18	2.82	2.48	0.88	680	2.70	2.38	0.88	714	2.59	2.28	0.88	748	2.50	2.20	0.88	782
29	20	2.94	2.23	0.76	714	2.82	2.14	0.76	757	2.74	2.08	0.76	774	2.64	2.01	0.76	808
29	22	3.06	1.96	0.64	740	2.95	1.89	0.64	786	2.88	1.84	0.64	808	2.76	1.77	0.64	842
29	24	3.22	1.67	0.52	774	3.10	1.61	0.52	816	3.02	1.57	0.52	842	2.93	1.52	0.52	884
29	26	3.31	1.32	0.40	816	3.22	1.29	0.40	859	3.17	1.27	0.40	884	3.07	1.23	0.40	910
30	18	2.82	2.59	0.92	680	2.70	2.48	0.92	714	2.59	2.38	0.92	748	2.50	2.30	0.92	782
30	20	2.94	2.35	0.80	714	2.82	2.26	0.80	757	2.74	2.19	0.80	774	2.64	2.11	0.80	808
30	22	3.06	2.08	0.68	740	2.95	2.01	0.68	786	2.88	1.96	0.68	808	2.76	1.88	0.68	842
30	24	3.22	1.80	0.56	774	3.10	1.73	0.56	816	3.02	1.69	0.56	842	2.93	1.64	0.56	884
30	26	3.31	1.46	0.44	816	3.22	1.42	0.44	859	3.17	1.39	0.44	884	3.07	1.35	0.44	910
31	18	2.82	2.71	0.96	680	2.70	2.59	0.96	714	2.59	2.49	0.96	748	2.50	2.40	0.96	782
31	20	2.94	2.47	0.84	714	2.82	2.37	0.84	757	2.74	2.30	0.84	774	2.64	2.22	0.84	808
31	22	3.06	2.20	0.72	740	2.95	2.13	0.72	786	2.88	2.07	0.72	808	2.76	1.99	0.72	842
31	24	3.22	1.93	0.60	774	3.10	1.86	0.60	816	3.02	1.81	0.60	842	2.93	1.76	0.60	884
31	26	3.31	1.59	0.48	816	3.22	1.54	0.48	859	3.17	1.52	0.48	884	3.07	1.47	0.48	910
32	18	2.82	2.82	1.00	680	2.70	2.70	1.00	714	2.59	2.59	1.00	748	2.50	2.50	1.00	782
32	20	2.94	2.59	0.88	714	2.82	2.48	0.88	757	2.74	2.41	0.88	774	2.64	2.32	0.88	808
32	22	3.06	2.33	0.76	740	2.95	2.24	0.76	786	2.88	2.19	0.76	808	2.76	2.10	0.76	842
32	24	3.22	2.06	0.64	774	3.10	1.98	0.64	816	3.02	1.94	0.64	842	2.93	1.87	0.64	884
32	26	3.31	1.72	0.52	816	3.22	1.67	0.52	859	3.17	1.65	0.52	884	3.07	1.60	0.52	910

NOTE Q :Total capacity (kW) SHF :Sensible heat factor DB :Dry-bulb temperature
SHC :Sensible heat capacity (kW) INPUT :Total power input (W) WB :Wet-bulb temperature

COOL operation (230V)

MSC-A07WV/YV(Single : Room B or C) : MUX-A22WV

CAPACITY : 2.4(kW) SHF : 0.74 INPUT : 850(W)

		OUTDOOR DB(℃)											
INDOOR DB(℃)	INDOOR WB(℃)	35				40				43			
		Q	SHC	SHF	INPUT	Q	SHC	SHF	INPUT	Q	SHC	SHF	INPUT
21	18	2.35	1.32	0.56	833	2.16	1.21	0.56	884	2.08	1.16	0.56	901
21	20	2.47	1.09	0.44	867	2.30	1.01	0.44	910	2.22	0.98	0.44	935
22	18	2.35	1.41	0.60	833	2.16	1.30	0.60	884	2.08	1.25	0.60	901
22	20	2.47	1.19	0.48	867	2.30	1.11	0.48	910	2.22	1.07	0.48	935
22	22	2.62	0.94	0.36	901	2.45	0.88	0.36	952	2.36	0.85	0.36	969
23	18	2.35	1.51	0.64	833	2.16	1.38	0.64	884	2.08	1.33	0.64	901
23	20	2.47	1.29	0.52	867	2.30	1.20	0.52	910	2.22	1.15	0.52	935
23	22	2.62	1.05	0.40	901	2.45	0.98	0.40	952	2.36	0.95	0.40	969
24	18	2.35	1.60	0.68	833	2.16	1.47	0.68	884	2.08	1.41	0.68	901
24	20	2.47	1.38	0.56	867	2.30	1.29	0.56	910	2.22	1.24	0.56	935
24	22	2.62	1.15	0.44	901	2.45	1.08	0.44	952	2.36	1.04	0.44	969
24	24	2.76	0.88	0.32	935	2.59	0.83	0.32	978	2.52	0.81	0.32	999
25	18	2.35	1.69	0.72	833	2.16	1.56	0.72	884	2.08	1.49	0.72	901
25	20	2.47	1.48	0.60	867	2.30	1.38	0.60	910	2.22	1.33	0.60	935
25	22	2.62	1.26	0.48	901	2.45	1.18	0.48	952	2.36	1.13	0.48	969
25	24	2.76	0.99	0.36	935	2.59	0.93	0.36	978	2.52	0.91	0.36	999
26	18	2.35	1.79	0.76	833	2.16	1.64	0.76	884	2.08	1.58	0.76	901
26	20	2.47	1.58	0.64	867	2.30	1.47	0.64	910	2.22	1.42	0.64	935
26	22	2.62	1.36	0.52	901	2.45	1.27	0.52	952	2.36	1.23	0.52	969
26	24	2.76	1.10	0.40	935	2.59	1.04	0.40	978	2.52	1.01	0.40	999
26	26	2.90	0.81	0.28	969	2.74	0.77	0.28	1012	2.65	0.74	0.28	1033
27	18	2.35	1.88	0.80	833	2.16	1.73	0.80	884	2.08	1.66	0.80	901
27	20	2.47	1.68	0.68	867	2.30	1.57	0.68	910	2.22	1.51	0.68	935
27	22	2.62	1.46	0.56	901	2.45	1.37	0.56	952	2.36	1.32	0.56	969
27	24	2.76	1.21	0.44	935	2.59	1.14	0.44	978	2.52	1.11	0.44	999
27	26	2.90	0.93	0.32	969	2.74	0.88	0.32	1012	2.65	0.85	0.32	1033
28	18	2.35	1.98	0.84	833	2.16	1.81	0.84	884	2.08	1.74	0.84	901
28	20	2.47	1.78	0.72	867	2.30	1.66	0.72	910	2.22	1.60	0.72	935
28	22	2.62	1.57	0.60	901	2.45	1.47	0.60	952	2.36	1.42	0.60	969
28	24	2.76	1.32	0.48	935	2.59	1.24	0.48	978	2.52	1.21	0.48	999
28	26	2.90	1.05	0.36	969	2.74	0.98	0.36	1012	2.65	0.95	0.36	1033
29	18	2.35	2.07	0.88	833	2.16	1.90	0.88	884	2.08	1.83	0.88	901
29	20	2.47	1.88	0.76	867	2.30	1.75	0.76	910	2.22	1.69	0.76	935
29	22	2.62	1.67	0.64	901	2.45	1.57	0.64	952	2.36	1.51	0.64	969
29	24	2.76	1.44	0.52	935	2.59	1.35	0.52	978	2.52	1.31	0.52	999
29	26	2.90	1.16	0.40	969	2.74	1.09	0.40	1012	2.65	1.06	0.40	1033
30	18	2.35	2.16	0.92	833	2.16	1.99	0.92	884	2.08	1.91	0.92	901
30	20	2.47	1.98	0.80	867	2.30	1.84	0.80	910	2.22	1.78	0.80	935
30	22	2.62	1.78	0.68	901	2.45	1.66	0.68	952	2.36	1.61	0.68	969
30	24	2.76	1.55	0.56	935	2.59	1.45	0.56	978	2.52	1.41	0.56	999
30	26	2.90	1.28	0.44	969	2.74	1.20	0.44	1012	2.65	1.17	0.44	1033
31	18	2.35	2.26	0.96	833	2.16	2.07	0.96	884	2.08	1.99	0.96	901
31	20	2.47	2.08	0.84	867	2.30	1.94	0.84	910	2.22	1.86	0.84	935
31	22	2.62	1.88	0.72	901	2.45	1.76	0.72	952	2.36	1.70	0.72	969
31	24	2.76	1.66	0.60	935	2.59	1.56	0.60	978	2.52	1.51	0.60	999
31	26	2.90	1.39	0.48	969	2.74	1.31	0.48	1012	2.65	1.27	0.48	1033
32	18	2.35	2.35	1.00	833	2.16	2.16	1.00	884	2.08	2.08	1.00	901
32	20	2.47	2.18	0.88	867	2.30	2.03	0.88	910	2.22	1.95	0.88	935
32	22	2.62	1.99	0.76	901	2.45	1.86	0.76	952	2.36	1.80	0.76	969
32	24	2.76	1.77	0.64	935	2.59	1.66	0.64	978	2.52	1.61	0.64	999
32	26	2.90	1.51	0.52	969	2.74	1.42	0.52	1012	2.65	1.38	0.52	1033

NOTE Q :Total capacity (kW) SHF :Sensible heat factor DB :Dry-bulb temperature
SHC :Sensible heat capacity (kW) INPUT :Total power input (W) WB :Wet-bulb temperature

COOL operation (230V)

MSC-A12WV/YV(Single) : MUX-A25WV

CAPACITY : 3.5(kW) SHF : 0.73 INPUT : 1340(W)

		OUTDOOR DB(℃)															
INDOOR DB(℃)	INDOOR WB(℃)	21				25				27				30			
		Q	SHC	SHF	INPUT	Q	SHC	SHF	INPUT	Q	SHC	SHF	INPUT	Q	SHC	SHF	INPUT
21	18	4.11	2.25	0.55	1072	3.94	2.15	0.55	1126	3.78	2.07	0.55	1179	3.64	1.99	0.55	1233
21	20	4.29	1.83	0.43	1126	4.11	1.76	0.43	1193	3.99	1.70	0.43	1219	3.85	1.64	0.43	1273
22	18	4.11	2.41	0.59	1072	3.94	2.31	0.59	1126	3.78	2.22	0.59	1179	3.64	2.14	0.59	1233
22	20	4.29	2.00	0.47	1126	4.11	1.92	0.47	1193	3.99	1.86	0.47	1219	3.85	1.80	0.47	1273
22	22	4.46	1.55	0.35	1166	4.31	1.49	0.35	1240	4.20	1.46	0.35	1273	4.03	1.40	0.35	1327
23	18	4.11	2.58	0.63	1072	3.94	2.47	0.63	1126	3.78	2.37	0.63	1179	3.64	2.28	0.63	1233
23	20	4.29	2.17	0.51	1126	4.11	2.09	0.51	1193	3.99	2.02	0.51	1219	3.85	1.95	0.51	1273
23	22	4.46	1.73	0.39	1166	4.31	1.67	0.39	1240	4.20	1.63	0.39	1273	4.03	1.56	0.39	1327
24	18	4.11	2.74	0.67	1072	3.94	2.63	0.67	1126	3.78	2.52	0.67	1179	3.64	2.43	0.67	1233
24	20	4.29	2.35	0.55	1126	4.11	2.25	0.55	1193	3.99	2.18	0.55	1219	3.85	2.11	0.55	1273
24	22	4.46	1.91	0.43	1166	4.31	1.84	0.43	1240	4.20	1.79	0.43	1273	4.03	1.72	0.43	1327
24	24	4.69	1.44	0.31	1219	4.52	1.39	0.31	1286	4.41	1.35	0.31	1327	4.27	1.31	0.31	1394
25	18	4.11	2.91	0.71	1072	3.94	2.78	0.71	1126	3.78	2.67	0.71	1179	3.64	2.57	0.71	1233
25	20	4.29	2.52	0.59	1126	4.11	2.41	0.59	1193	3.99	2.34	0.59	1219	3.85	2.26	0.59	1273
25	22	4.46	2.08	0.47	1166	4.31	2.01	0.47	1240	4.20	1.96	0.47	1273	4.03	1.88	0.47	1327
25	24	4.69	1.63	0.35	1219	4.52	1.57	0.35	1286	4.41	1.53	0.35	1327	4.27	1.48	0.35	1394
26	18	4.11	3.07	0.75	1072	3.94	2.94	0.75	1126	3.78	2.82	0.75	1179	3.64	2.72	0.75	1233
26	20	4.29	2.69	0.63	1126	4.11	2.58	0.63	1193	3.99	2.50	0.63	1219	3.85	2.41	0.63	1273
26	22	4.46	2.26	0.51	1166	4.31	2.18	0.51	1240	4.20	2.13	0.51	1273	4.03	2.04	0.51	1327
26	24	4.69	1.82	0.39	1219	4.52	1.75	0.39	1286	4.41	1.71	0.39	1327	4.27	1.65	0.39	1394
26	26	4.83	1.29	0.27	1286	4.69	1.25	0.27	1353	4.62	1.23	0.27	1394	4.48	1.20	0.27	1434
27	18	4.11	3.24	0.79	1072	3.94	3.10	0.79	1126	3.78	2.97	0.79	1179	3.64	2.86	0.79	1233
27	20	4.29	2.86	0.67	1126	4.11	2.74	0.67	1193	3.99	2.66	0.67	1219	3.85	2.57	0.67	1273
27	22	4.46	2.44	0.55	1166	4.31	2.35	0.55	1240	4.20	2.30	0.55	1273	4.03	2.20	0.55	1327
27	24	4.69	2.00	0.43	1219	4.52	1.93	0.43	1286	4.41	1.88	0.43	1327	4.27	1.82	0.43	1394
27	26	4.83	1.48	0.31	1286	4.69	1.44	0.31	1353	4.62	1.42	0.31	1394	4.48	1.38	0.31	1434
28	18	4.11	3.40	0.83	1072	3.94	3.26	0.83	1126	3.78	3.13	0.83	1179	3.64	3.01	0.83	1233
28	20	4.29	3.03	0.71	1126	4.11	2.91	0.71	1193	3.99	2.82	0.71	1219	3.85	2.72	0.71	1273
28	22	4.46	2.62	0.59	1166	4.31	2.53	0.59	1240	4.20	2.47	0.59	1273	4.03	2.36	0.59	1327
28	24	4.69	2.19	0.47	1219	4.52	2.11	0.47	1286	4.41	2.06	0.47	1327	4.27	1.99	0.47	1394
28	26	4.83	1.68	0.35	1286	4.69	1.63	0.35	1353	4.62	1.60	0.35	1394	4.48	1.55	0.35	1434
29	18	4.11	3.57	0.87	1072	3.94	3.41	0.87	1126	3.78	3.28	0.87	1179	3.64	3.16	0.87	1233
29	20	4.29	3.20	0.75	1126	4.11	3.07	0.75	1193	3.99	2.98	0.75	1219	3.85	2.88	0.75	1273
29	22	4.46	2.80	0.63	1166	4.31	2.70	0.63	1240	4.20	2.63	0.63	1273	4.03	2.52	0.63	1327
29	24	4.69	2.38	0.51	1219	4.52	2.29	0.51	1286	4.41	2.24	0.51	1327	4.27	2.16	0.51	1394
29	26	4.83	1.87	0.39	1286	4.69	1.82	0.39	1353	4.62	1.79	0.39	1394	4.48	1.73	0.39	1434
30	18	4.11	3.73	0.91	1072	3.94	3.57	0.91	1126	3.78	3.43	0.91	1179	3.64	3.30	0.91	1233
30	20	4.29	3.37	0.79	1126	4.11	3.24	0.79	1193	3.99	3.14	0.79	1219	3.85	3.03	0.79	1273
30	22	4.46	2.98	0.67	1166	4.31	2.87	0.67	1240	4.20	2.80	0.67	1273	4.03	2.68	0.67	1327
30	24	4.69	2.57	0.55	1219	4.52	2.47	0.55	1286	4.41	2.41	0.55	1327	4.27	2.34	0.55	1394
30	26	4.83	2.06	0.43	1286	4.69	2.00	0.43	1353	4.62	1.97	0.43	1394	4.48	1.91	0.43	1434
31	18	4.11	3.89	0.95	1072	3.94	3.73	0.95	1126	3.78	3.58	0.95	1179	3.64	3.45	0.95	1233
31	20	4.29	3.55	0.83	1126	4.11	3.40	0.83	1193	3.99	3.30	0.83	1219	3.85	3.18	0.83	1273
31	22	4.46	3.15	0.71	1166	4.31	3.04	0.71	1240	4.20	2.97	0.71	1273	4.03	2.85	0.71	1327
31	24	4.69	2.75	0.59	1219	4.52	2.65	0.59	1286	4.41	2.59	0.59	1327	4.27	2.51	0.59	1394
31	26	4.83	2.26	0.47	1286	4.69	2.19	0.47	1353	4.62	2.16	0.47	1394	4.48	2.09	0.47	1434
32	18	4.11	4.06	0.99	1072	3.94	3.89	0.99	1126	3.78	3.73	0.99	1179	3.64	3.59	0.99	1233
32	20	4.29	3.72	0.87	1126	4.11	3.57	0.87	1193	3.99	3.46	0.87	1219	3.85	3.34	0.87	1273
32	22	4.46	3.33	0.75	1166	4.31	3.22	0.75	1240	4.20	3.14	0.75	1273	4.03	3.01	0.75	1327
32	24	4.69	2.94	0.63	1219	4.52	2.83	0.63	1286	4.41	2.77	0.63	1327	4.27	2.68	0.63	1394
32	26	4.83	2.45	0.51	1286	4.69	2.38	0.51	1353	4.62	2.34	0.51	1394	4.48	2.27	0.51	1434

NOTE Q :Total capacity (kW) SHF :Sensible heat factor DB :Dry-bulb temperature
SHC :Sensible heat capacity (kW) INPUT :Total power input (W) WB :Wet-bulb temperature

COOL operation (230V)

MSC-A12WV/YV(Single) : MUX-A25WV

CAPACITY : 3.5(kW) SHF : 0.73 INPUT : 1340(W)

		OUTDOOR DB(℃)											
INDOOR DB(℃)	INDOOR WB(℃)	35				40				43			
		Q	SHC	SHF	INPUT	Q	SHC	SHF	INPUT	Q	SHC	SHF	INPUT
21	18	3.43	1.88	0.55	1313	3.15	1.72	0.55	1394	3.03	1.66	0.55	1420
21	20	3.61	1.54	0.43	1367	3.36	1.43	0.43	1434	3.24	1.38	0.43	1474
22	18	3.43	2.01	0.59	1313	3.15	1.85	0.59	1394	3.03	1.78	0.59	1420
22	20	3.61	1.68	0.47	1367	3.36	1.57	0.47	1434	3.24	1.51	0.47	1474
22	22	3.82	1.32	0.35	1420	3.57	1.24	0.35	1501	3.45	1.20	0.35	1528
23	18	3.43	2.15	0.63	1313	3.15	1.98	0.63	1394	3.03	1.90	0.63	1420
23	20	3.61	1.83	0.51	1367	3.36	1.70	0.51	1434	3.24	1.64	0.51	1474
23	22	3.82	1.48	0.39	1420	3.57	1.38	0.39	1501	3.45	1.33	0.39	1528
24	18	3.43	2.29	0.67	1313	3.15	2.10	0.67	1394	3.03	2.02	0.67	1420
24	20	3.61	1.97	0.55	1367	3.36	1.84	0.55	1434	3.24	1.77	0.55	1474
24	22	3.82	1.63	0.43	1420	3.57	1.52	0.43	1501	3.45	1.47	0.43	1528
24	24	4.03	1.24	0.31	1474	3.78	1.16	0.31	1541	3.68	1.13	0.31	1575
25	18	3.43	2.43	0.71	1313	3.15	2.23	0.71	1394	3.03	2.14	0.71	1420
25	20	3.61	2.12	0.59	1367	3.36	1.97	0.59	1434	3.24	1.90	0.59	1474
25	22	3.82	1.78	0.47	1420	3.57	1.67	0.47	1501	3.45	1.61	0.47	1528
25	24	4.03	1.40	0.35	1474	3.78	1.31	0.35	1541	3.68	1.28	0.35	1575
26	18	3.43	2.56	0.75	1313	3.15	2.35	0.75	1394	3.03	2.26	0.75	1420
26	20	3.61	2.26	0.63	1367	3.36	2.11	0.63	1434	3.24	2.03	0.63	1474
26	22	3.82	1.93	0.51	1420	3.57	1.81	0.51	1501	3.45	1.75	0.51	1528
26	24	4.03	1.56	0.39	1474	3.78	1.46	0.39	1541	3.68	1.42	0.39	1575
26	26	4.24	1.13	0.27	1528	3.99	1.07	0.27	1595	3.87	1.03	0.27	1628
27	18	3.43	2.70	0.79	1313	3.15	2.48	0.79	1394	3.03	2.38	0.79	1420
27	20	3.61	2.40	0.67	1367	3.36	2.24	0.67	1434	3.24	2.16	0.67	1474
27	22	3.82	2.09	0.55	1420	3.57	1.95	0.55	1501	3.45	1.89	0.55	1528
27	24	4.03	1.72	0.43	1474	3.78	1.61	0.43	1541	3.68	1.57	0.43	1575
27	26	4.24	1.30	0.31	1528	3.99	1.22	0.31	1595	3.87	1.19	0.31	1628
28	18	3.43	2.84	0.83	1313	3.15	2.61	0.83	1394	3.03	2.50	0.83	1420
28	20	3.61	2.55	0.71	1367	3.36	2.38	0.71	1434	3.24	2.29	0.71	1474
28	22	3.82	2.24	0.59	1420	3.57	2.10	0.59	1501	3.45	2.02	0.59	1528
28	24	4.03	1.88	0.47	1474	3.78	1.77	0.47	1541	3.68	1.72	0.47	1575
28	26	4.24	1.47	0.35	1528	3.99	1.38	0.35	1595	3.87	1.34	0.35	1628
29	18	3.43	2.97	0.87	1313	3.15	2.73	0.87	1394	3.03	2.62	0.87	1420
29	20	3.61	2.69	0.75	1367	3.36	2.51	0.75	1434	3.24	2.42	0.75	1474
29	22	3.82	2.39	0.63	1420	3.57	2.24	0.63	1501	3.45	2.16	0.63	1528
29	24	4.03	2.04	0.51	1474	3.78	1.92	0.51	1541	3.68	1.86	0.51	1575
29	26	4.24	1.64	0.39	1528	3.99	1.54	0.39	1595	3.87	1.50	0.39	1628
30	18	3.43	3.11	0.91	1313	3.15	2.86	0.91	1394	3.03	2.75	0.91	1420
30	20	3.61	2.84	0.79	1367	3.36	2.64	0.79	1434	3.24	2.55	0.79	1474
30	22	3.82	2.54	0.67	1420	3.57	2.38	0.67	1501	3.45	2.30	0.67	1528
30	24	4.03	2.20	0.55	1474	3.78	2.07	0.55	1541	3.68	2.01	0.55	1575
30	26	4.24	1.81	0.43	1528	3.99	1.70	0.43	1595	3.87	1.65	0.43	1628
31	18	3.43	3.25	0.95	1313	3.15	2.98	0.95	1394	3.03	2.87	0.95	1420
31	20	3.61	2.98	0.83	1367	3.36	2.78	0.83	1434	3.24	2.68	0.83	1474
31	22	3.82	2.70	0.71	1420	3.57	2.52	0.71	1501	3.45	2.44	0.71	1528
31	24	4.03	2.36	0.59	1474	3.78	2.22	0.59	1541	3.68	2.16	0.59	1575
31	26	4.24	1.98	0.47	1528	3.99	1.86	0.47	1595	3.87	1.81	0.47	1628
32	18	3.43	3.39	0.99	1313	3.15	3.11	0.99	1394	3.03	2.99	0.99	1420
32	20	3.61	3.13	0.87	1367	3.36	2.91	0.87	1434	3.24	2.81	0.87	1474
32	22	3.82	2.85	0.75	1420	3.57	2.67	0.75	1501	3.45	2.58	0.75	1528
32	24	4.03	2.52	0.63	1474	3.78	2.37	0.63	1541	3.68	2.30	0.63	1575
32	26	4.24	2.15	0.51	1528	3.99	2.02	0.51	1595	3.87	1.96	0.51	1628

NOTE Q :Total capacity (kW) SHF :Sensible heat factor DB :Dry-bulb temperature
SHC :Sensible heat capacity (kW) INPUT :Total power input (W) WB :Wet-bulb temperature

COOL operation (230V)

MSC-A09WV/YV(Single : Room C) : MUX-A26WV

CAPACITY : 2.75(kW) SHF :0.73 INPUT : 1050(W)

		OUTDOOR DB(℃)															
INDOOR DB(℃)	INDOOR WB(℃)	21				25				27				30			
		Q	SHC	SHF	INPUT	Q	SHC	SHF	INPUT	Q	SHC	SHF	INPUT	Q	SHC	SHF	INPUT
21	18	3.23	1.76	0.55	840	3.09	1.69	0.55	882	2.97	1.62	0.55	924	2.86	1.56	0.55	966
21	20	3.37	1.43	0.43	882	3.23	1.37	0.43	935	3.14	1.33	0.43	956	3.03	1.29	0.43	998
22	18	3.23	1.89	0.59	840	3.09	1.81	0.59	882	2.97	1.74	0.59	924	2.86	1.67	0.59	966
22	20	3.37	1.57	0.47	882	3.23	1.50	0.47	935	3.14	1.46	0.47	956	3.03	1.41	0.47	998
22	22	3.51	1.21	0.35	914	3.38	1.17	0.35	971	3.30	1.14	0.35	998	3.16	1.09	0.35	1040
23	18	3.23	2.02	0.63	840	3.09	1.93	0.63	882	2.97	1.86	0.63	924	2.86	1.79	0.63	966
23	20	3.37	1.70	0.51	882	3.23	1.63	0.51	935	3.14	1.58	0.51	956	3.03	1.53	0.51	998
23	22	3.51	1.35	0.39	914	3.38	1.30	0.39	971	3.30	1.27	0.39	998	3.16	1.22	0.39	1040
24	18	3.23	2.15	0.67	840	3.09	2.06	0.67	882	2.97	1.98	0.67	924	2.86	1.90	0.67	966
24	20	3.37	1.84	0.55	882	3.23	1.76	0.55	935	3.14	1.71	0.55	956	3.03	1.65	0.55	998
24	22	3.51	1.49	0.43	914	3.38	1.44	0.43	971	3.30	1.40	0.43	998	3.16	1.34	0.43	1040
24	24	3.69	1.12	0.31	956	3.55	1.08	0.31	1008	3.47	1.06	0.31	1040	3.36	1.02	0.31	1092
25	18	3.23	2.28	0.71	840	3.09	2.18	0.71	882	2.97	2.09	0.71	924	2.86	2.02	0.71	966
25	20	3.37	1.97	0.59	882	3.23	1.89	0.59	935	3.14	1.83	0.59	956	3.03	1.77	0.59	998
25	22	3.51	1.63	0.47	914	3.38	1.57	0.47	971	3.30	1.53	0.47	998	3.16	1.47	0.47	1040
25	24	3.69	1.27	0.35	956	3.55	1.22	0.35	1008	3.47	1.20	0.35	1040	3.36	1.16	0.35	1092
26	18	3.23	2.41	0.75	840	3.09	2.30	0.75	882	2.97	2.21	0.75	924	2.86	2.13	0.75	966
26	20	3.37	2.11	0.63	882	3.23	2.02	0.63	935	3.14	1.96	0.63	956	3.03	1.89	0.63	998
26	22	3.51	1.77	0.51	914	3.38	1.71	0.51	971	3.30	1.67	0.51	998	3.16	1.60	0.51	1040
26	24	3.69	1.42	0.39	956	3.55	1.37	0.39	1008	3.47	1.33	0.39	1040	3.36	1.29	0.39	1092
26	26	3.80	1.01	0.27	1008	3.69	0.98	0.27	1061	3.63	0.96	0.27	1092	3.52	0.93	0.27	1124
27	18	3.23	2.54	0.79	840	3.09	2.43	0.79	882	2.97	2.33	0.79	924	2.86	2.25	0.79	966
27	20	3.37	2.24	0.67	882	3.23	2.15	0.67	935	3.14	2.08	0.67	956	3.03	2.01	0.67	998
27	22	3.51	1.91	0.55	914	3.38	1.84	0.55	971	3.30	1.80	0.55	998	3.16	1.72	0.55	1040
27	24	3.69	1.57	0.43	956	3.55	1.51	0.43	1008	3.47	1.47	0.43	1040	3.36	1.43	0.43	1092
27	26	3.80	1.16	0.31	1008	3.69	1.12	0.31	1061	3.63	1.11	0.31	1092	3.52	1.07	0.31	1124
28	18	3.23	2.67	0.83	840	3.09	2.55	0.83	882	2.97	2.45	0.83	924	2.86	2.36	0.83	966
28	20	3.37	2.37	0.71	882	3.23	2.28	0.71	935	3.14	2.21	0.71	956	3.03	2.13	0.71	998
28	22	3.51	2.05	0.59	914	3.38	1.98	0.59	971	3.30	1.93	0.59	998	3.16	1.85	0.59	1040
28	24	3.69	1.71	0.47	956	3.55	1.65	0.47	1008	3.47	1.61	0.47	1040	3.36	1.56	0.47	1092
28	26	3.80	1.31	0.35	1008	3.69	1.27	0.35	1061	3.63	1.25	0.35	1092	3.52	1.21	0.35	1124
29	18	3.23	2.80	0.87	840	3.09	2.68	0.87	882	2.97	2.57	0.87	924	2.86	2.47	0.87	966
29	20	3.37	2.51	0.75	882	3.23	2.41	0.75	935	3.14	2.34	0.75	956	3.03	2.25	0.75	998
29	22	3.51	2.19	0.63	914	3.38	2.11	0.63	971	3.30	2.06	0.63	998	3.16	1.98	0.63	1040
29	24	3.69	1.86	0.51	956	3.55	1.79	0.51	1008	3.47	1.75	0.51	1040	3.36	1.69	0.51	1092
29	26	3.80	1.46	0.39	1008	3.69	1.42	0.39	1061	3.63	1.40	0.39	1092	3.52	1.36	0.39	1124
30	18	3.23	2.92	0.91	840	3.09	2.80	0.91	882	2.97	2.69	0.91	924	2.86	2.59	0.91	966
30	20	3.37	2.64	0.79	882	3.23	2.54	0.79	935	3.14	2.46	0.79	956	3.03	2.37	0.79	998
30	22	3.51	2.33	0.67	914	3.38	2.25	0.67	971	3.30	2.19	0.67	998	3.16	2.10	0.67	1040
30	24	3.69	2.01	0.55	956	3.55	1.93	0.55	1008	3.47	1.89	0.55	1040	3.36	1.83	0.55	1092
30	26	3.80	1.61	0.43	1008	3.69	1.57	0.43	1061	3.63	1.54	0.43	1092	3.52	1.50	0.43	1124
31	18	3.23	3.05	0.95	840	3.09	2.92	0.95	882	2.97	2.81	0.95	924	2.86	2.70	0.95	966
31	20	3.37	2.78	0.83	882	3.23	2.67	0.83	935	3.14	2.59	0.83	956	3.03	2.50	0.83	998
31	22	3.51	2.47	0.71	914	3.38	2.38	0.71	971	3.30	2.33	0.71	998	3.16	2.23	0.71	1040
31	24	3.69	2.16	0.59	956	3.55	2.08	0.59	1008	3.47	2.03	0.59	1040	3.36	1.96	0.59	1092
31	26	3.80	1.76	0.47	1008	3.69	1.71	0.47	1061	3.63	1.69	0.47	1092	3.52	1.64	0.47	1124
32	18	3.23	3.18	0.99	840	3.09	3.05	0.99	882	2.97	2.93	0.99	924	2.86	2.82	0.99	966
32	20	3.37	2.91	0.87	882	3.23	2.80	0.87	935	3.14	2.71	0.87	956	3.03	2.62	0.87	998
32	22	3.51	2.61	0.75	914	3.38	2.52	0.75	971	3.30	2.46	0.75	998	3.16	2.36	0.75	1040
32	24	3.69	2.30	0.63	956	3.55	2.22	0.63	1008	3.47	2.17	0.63	1040	3.36	2.10	0.63	1092
32	26	3.80	1.92	0.51	1008	3.69	1.86	0.51	1061	3.63	1.83	0.51	1092	3.52	1.78	0.51	1124

NOTE Q :Total capacity (kW) SHF :Sensible heat factor DB :Dry-bulb temperature
SHC :Sensible heat capacity (kW) INPUT :Total power input (W) WB :Wet-bulb temperature

COOL operation (230V)

MSC-A09WV/YV(Single : Room C) : MUX-A26WV

CAPACITY : 2.75(kW) SHF : 0.73 INPUT : 1050(W)

		OUTDOOR DB(℃)											
INDOOR DB(℃)	INDOOR WB(℃)	35				40				43			
		Q	SHC	SHF	INPUT	Q	SHC	SHF	INPUT	Q	SHC	SHF	INPUT
21	18	2.70	1.47	0.55	1029	2.48	1.35	0.55	1092	2.38	1.30	0.55	1113
21	20	2.83	1.20	0.43	1071	2.64	1.12	0.43	1124	2.54	1.08	0.43	1155
22	18	2.70	1.58	0.59	1029	2.48	1.45	0.59	1092	2.38	1.39	0.59	1113
22	20	2.83	1.32	0.47	1071	2.64	1.23	0.47	1124	2.54	1.18	0.47	1155
22	22	3.00	1.03	0.35	1113	2.81	0.97	0.35	1176	2.71	0.93	0.35	1197
23	18	2.70	1.68	0.63	1029	2.48	1.55	0.63	1092	2.38	1.49	0.63	1113
23	20	2.83	1.43	0.51	1071	2.64	1.33	0.51	1124	2.54	1.28	0.51	1155
23	22	3.00	1.15	0.39	1113	2.81	1.08	0.39	1176	2.71	1.04	0.39	1197
24	18	2.70	1.79	0.67	1029	2.48	1.65	0.67	1092	2.38	1.58	0.67	1113
24	20	2.83	1.54	0.55	1071	2.64	1.44	0.55	1124	2.54	1.39	0.55	1155
24	22	3.00	1.27	0.43	1113	2.81	1.19	0.43	1176	2.71	1.15	0.43	1197
24	24	3.16	0.96	0.31	1155	2.97	0.91	0.31	1208	2.89	0.88	0.31	1234
25	18	2.70	1.90	0.71	1029	2.48	1.74	0.71	1092	2.38	1.68	0.71	1113
25	20	2.83	1.66	0.59	1071	2.64	1.54	0.59	1124	2.54	1.49	0.59	1155
25	22	3.00	1.39	0.47	1113	2.81	1.30	0.47	1176	2.71	1.26	0.47	1197
25	24	3.16	1.09	0.35	1155	2.97	1.02	0.35	1208	2.89	1.00	0.35	1234
26	18	2.70	2.01	0.75	1029	2.48	1.84	0.75	1092	2.38	1.77	0.75	1113
26	20	2.83	1.77	0.63	1071	2.64	1.65	0.63	1124	2.54	1.59	0.63	1155
26	22	3.00	1.51	0.51	1113	2.81	1.42	0.51	1176	2.71	1.37	0.51	1197
26	24	3.16	1.22	0.39	1155	2.97	1.14	0.39	1208	2.89	1.11	0.39	1234
26	26	3.33	0.88	0.27	1197	3.14	0.83	0.27	1250	3.04	0.81	0.27	1276
27	18	2.70	2.12	0.79	1029	2.48	1.94	0.79	1092	2.38	1.87	0.79	1113
27	20	2.83	1.88	0.67	1071	2.64	1.76	0.67	1124	2.54	1.69	0.67	1155
27	22	3.00	1.63	0.55	1113	2.81	1.53	0.55	1176	2.71	1.48	0.55	1197
27	24	3.16	1.34	0.43	1155	2.97	1.26	0.43	1208	2.89	1.23	0.43	1234
27	26	3.33	1.01	0.31	1197	3.14	0.96	0.31	1250	3.04	0.93	0.31	1276
28	18	2.70	2.22	0.83	1029	2.48	2.04	0.83	1092	2.38	1.96	0.83	1113
28	20	2.83	2.00	0.71	1071	2.64	1.86	0.71	1124	2.54	1.79	0.71	1155
28	22	3.00	1.75	0.59	1113	2.81	1.64	0.59	1176	2.71	1.58	0.59	1197
28	24	3.16	1.47	0.47	1155	2.97	1.38	0.47	1208	2.89	1.34	0.47	1234
28	26	3.33	1.15	0.35	1197	3.14	1.08	0.35	1250	3.04	1.05	0.35	1276
29	18	2.70	2.33	0.87	1029	2.48	2.14	0.87	1092	2.38	2.06	0.87	1113
29	20	2.83	2.11	0.75	1071	2.64	1.97	0.75	1124	2.54	1.90	0.75	1155
29	22	3.00	1.87	0.63	1113	2.81	1.75	0.63	1176	2.71	1.69	0.63	1197
29	24	3.16	1.60	0.51	1155	2.97	1.50	0.51	1208	2.89	1.46	0.51	1234
29	26	3.33	1.28	0.39	1197	3.14	1.21	0.39	1250	3.04	1.17	0.39	1276
30	18	2.70	2.44	0.91	1029	2.48	2.24	0.91	1092	2.38	2.15	0.91	1113
30	20	2.83	2.22	0.79	1071	2.64	2.07	0.79	1124	2.54	2.00	0.79	1155
30	22	3.00	1.99	0.67	1113	2.81	1.87	0.67	1176	2.71	1.80	0.67	1197
30	24	3.16	1.72	0.55	1155	2.97	1.62	0.55	1208	2.89	1.57	0.55	1234
30	26	3.33	1.41	0.43	1197	3.14	1.33	0.43	1250	3.04	1.29	0.43	1276
31	18	2.70	2.55	0.95	1029	2.48	2.34	0.95	1092	2.38	2.25	0.95	1113
31	20	2.83	2.34	0.83	1071	2.64	2.18	0.83	1124	2.54	2.10	0.83	1155
31	22	3.00	2.11	0.71	1113	2.81	1.98	0.71	1176	2.71	1.91	0.71	1197
31	24	3.16	1.85	0.59	1155	2.97	1.74	0.59	1208	2.89	1.69	0.59	1234
31	26	3.33	1.55	0.47	1197	3.14	1.46	0.47	1250	3.04	1.41	0.47	1276
32	18	2.70	2.65	0.99	1029	2.48	2.44	0.99	1092	2.38	2.34	0.99	1113
32	20	2.83	2.45	0.87	1071	2.64	2.28	0.87	1124	2.54	2.20	0.87	1155
32	22	3.00	2.23	0.75	1113	2.81	2.09	0.75	1176	2.71	2.02	0.75	1197
32	24	3.16	1.98	0.63	1155	2.97	1.86	0.63	1208	2.89	1.80	0.63	1234
32	26	3.33	1.68	0.51	1197	3.14	1.58	0.51	1250	3.04	1.53	0.51	1276

NOTE Q :Total capacity (kW) SHF :Sensible heat factor DB :Dry-bulb temperature
SHC :Sensible heat capacity (kW) INPUT :Total power input (W) WB :Wet-bulb temperature

COOL operation (230V)

MSC-A12WV/YV(Single : Room A) : MUX-A26WV

CAPACITY : 3.4(kW) SHF : 0.77 INPUT : 1220(W)

		OUTDOOR DB(℃)															
INDOOR DB(℃)	INDOOR WB(℃)	21				25				27				30			
		Q	SHC	SHF	INPUT	Q	SHC	SHF	INPUT	Q	SHC	SHF	INPUT	Q	SHC	SHF	INPUT
21	18	4.00	2.37	0.59	976	3.83	2.27	0.59	1025	3.67	2.18	0.59	1074	3.54	2.10	0.59	1122
21	20	4.17	1.97	0.47	1025	4.00	1.89	0.47	1086	3.88	1.83	0.47	1110	3.74	1.77	0.47	1159
22	18	4.00	2.53	0.63	976	3.83	2.42	0.63	1025	3.67	2.32	0.63	1074	3.54	2.24	0.63	1122
22	20	4.17	2.14	0.51	1025	4.00	2.05	0.51	1086	3.88	1.99	0.51	1110	3.74	1.92	0.51	1159
22	22	4.34	1.70	0.39	1061	4.18	1.64	0.39	1129	4.08	1.60	0.39	1159	3.91	1.54	0.39	1208
23	18	4.00	2.69	0.67	976	3.83	2.57	0.67	1025	3.67	2.47	0.67	1074	3.54	2.38	0.67	1122
23	20	4.17	2.30	0.55	1025	4.00	2.21	0.55	1086	3.88	2.14	0.55	1110	3.74	2.07	0.55	1159
23	22	4.34	1.88	0.43	1061	4.18	1.81	0.43	1129	4.08	1.77	0.43	1159	3.91	1.69	0.43	1208
24	18	4.00	2.85	0.71	976	3.83	2.73	0.71	1025	3.67	2.62	0.71	1074	3.54	2.52	0.71	1122
24	20	4.17	2.47	0.59	1025	4.00	2.37	0.59	1086	3.88	2.30	0.59	1110	3.74	2.22	0.59	1159
24	22	4.34	2.05	0.47	1061	4.18	1.98	0.47	1129	4.08	1.93	0.47	1159	3.91	1.85	0.47	1208
24	24	4.56	1.61	0.35	1110	4.39	1.55	0.35	1171	4.28	1.51	0.35	1208	4.15	1.46	0.35	1269
25	18	4.00	3.01	0.75	976	3.83	2.88	0.75	1025	3.67	2.77	0.75	1074	3.54	2.66	0.75	1122
25	20	4.17	2.64	0.63	1025	4.00	2.53	0.63	1086	3.88	2.45	0.63	1110	3.74	2.37	0.63	1159
25	22	4.34	2.22	0.51	1061	4.18	2.15	0.51	1129	4.08	2.09	0.51	1159	3.91	2.01	0.51	1208
25	24	4.56	1.79	0.39	1110	4.39	1.72	0.39	1171	4.28	1.68	0.39	1208	4.15	1.63	0.39	1269
26	18	4.00	3.17	0.79	976	3.83	3.03	0.79	1025	3.67	2.91	0.79	1074	3.54	2.80	0.79	1122
26	20	4.17	2.80	0.67	1025	4.00	2.69	0.67	1086	3.88	2.61	0.67	1110	3.74	2.52	0.67	1159
26	22	4.34	2.40	0.55	1061	4.18	2.31	0.55	1129	4.08	2.26	0.55	1159	3.91	2.16	0.55	1208
26	24	4.56	1.97	0.43	1110	4.39	1.90	0.43	1171	4.28	1.85	0.43	1208	4.15	1.80	0.43	1269
26	26	4.69	1.47	0.31	1171	4.56	1.43	0.31	1232	4.49	1.40	0.31	1269	4.35	1.36	0.31	1305
27	18	4.00	3.33	0.83	976	3.83	3.19	0.83	1025	3.67	3.06	0.83	1074	3.54	2.95	0.83	1122
27	20	4.17	2.97	0.71	1025	4.00	2.85	0.71	1086	3.88	2.76	0.71	1110	3.74	2.67	0.71	1159
27	22	4.34	2.57	0.59	1061	4.18	2.48	0.59	1129	4.08	2.42	0.59	1159	3.91	2.32	0.59	1208
27	24	4.56	2.15	0.47	1110	4.39	2.07	0.47	1171	4.28	2.03	0.47	1208	4.15	1.96	0.47	1269
27	26	4.69	1.66	0.35	1171	4.56	1.61	0.35	1232	4.49	1.58	0.35	1269	4.35	1.54	0.35	1305
28	18	4.00	3.49	0.87	976	3.83	3.34	0.87	1025	3.67	3.21	0.87	1074	3.54	3.09	0.87	1122
28	20	4.17	3.14	0.75	1025	4.00	3.01	0.75	1086	3.88	2.92	0.75	1110	3.74	2.82	0.75	1159
28	22	4.34	2.74	0.63	1061	4.18	2.65	0.63	1129	4.08	2.58	0.63	1159	3.91	2.48	0.63	1208
28	24	4.56	2.34	0.51	1110	4.39	2.25	0.51	1171	4.28	2.20	0.51	1208	4.15	2.13	0.51	1269
28	26	4.69	1.84	0.39	1171	4.56	1.79	0.39	1232	4.49	1.76	0.39	1269	4.35	1.71	0.39	1305
29	18	4.00	3.65	0.91	976	3.83	3.49	0.91	1025	3.67	3.35	0.91	1074	3.54	3.23	0.91	1122
29	20	4.17	3.30	0.79	1025	4.00	3.17	0.79	1086	3.88	3.07	0.79	1110	3.74	2.97	0.79	1159
29	22	4.34	2.92	0.67	1061	4.18	2.81	0.67	1129	4.08	2.75	0.67	1159	3.91	2.63	0.67	1208
29	24	4.56	2.52	0.55	1110	4.39	2.43	0.55	1171	4.28	2.37	0.55	1208	4.15	2.29	0.55	1269
29	26	4.69	2.03	0.43	1171	4.56	1.97	0.43	1232	4.49	1.94	0.43	1269	4.35	1.88	0.43	1305
30	18	4.00	3.81	0.95	976	3.83	3.65	0.95	1025	3.67	3.50	0.95	1074	3.54	3.37	0.95	1122
30	20	4.17	3.47	0.83	1025	4.00	3.33	0.83	1086	3.88	3.23	0.83	1110	3.74	3.12	0.83	1159
30	22	4.34	3.09	0.71	1061	4.18	2.98	0.71	1129	4.08	2.91	0.71	1159	3.91	2.79	0.71	1208
30	24	4.56	2.70	0.59	1110	4.39	2.60	0.59	1171	4.28	2.54	0.59	1208	4.15	2.46	0.59	1269
30	26	4.69	2.22	0.47	1171	4.56	2.15	0.47	1232	4.49	2.12	0.47	1269	4.35	2.06	0.47	1305
31	18	4.00	3.97	0.99	976	3.83	3.80	0.99	1025	3.67	3.65	0.99	1074	3.54	3.51	0.99	1122
31	20	4.17	3.64	0.87	1025	4.00	3.49	0.87	1086	3.88	3.38	0.87	1110	3.74	3.27	0.87	1159
31	22	4.34	3.26	0.75	1061	4.18	3.15	0.75	1129	4.08	3.07	0.75	1159	3.91	2.94	0.75	1208
31	24	4.56	2.88	0.63	1110	4.39	2.78	0.63	1171	4.28	2.71	0.63	1208	4.15	2.63	0.63	1269
31	26	4.69	2.41	0.51	1171	4.56	2.34	0.51	1232	4.49	2.30	0.51	1269	4.35	2.23	0.51	1305
32	18	4.00	4.13	1.03	976	3.83	3.95	1.03	1025	3.67	3.79	1.03	1074	3.54	3.65	1.03	1122
32	20	4.17	3.80	0.91	1025	4.00	3.65	0.91	1086	3.88	3.54	0.91	1110	3.74	3.41	0.91	1159
32	22	4.34	3.44	0.79	1061	4.18	3.32	0.79	1129	4.08	3.24	0.79	1159	3.91	3.10	0.79	1208
32	24	4.56	3.07	0.67	1110	4.39	2.95	0.67	1171	4.28	2.88	0.67	1208	4.15	2.79	0.67	1269
32	26	4.69	2.59	0.55	1171	4.56	2.52	0.55	1232	4.49	2.48	0.55	1269	4.35	2.41	0.55	1305

NOTE Q :Total capacity (kW) SHF :Sensible heat factor DB :Dry-bulb temperature
SHC :Sensible heat capacity (kW) INPUT :Total power input (W) WB :Wet-bulb temperature

COOL operation (230V)

MSC-A12WV/YV(Single : Room A) : MUX-A26WV

CAPACITY : 3.4(kW) SHF : 0.77 INPUT : 1220(W)

		OUTDOOR DB(℃)											
INDOOR DB(℃)	INDOOR WB(℃)	35				40				43			
		Q	SHC	SHF	INPUT	Q	SHC	SHF	INPUT	Q	SHC	SHF	INPUT
21	18	3.33	1.98	0.59	1196	3.06	1.81	0.59	1269	2.94	1.74	0.59	1293
21	20	3.50	1.66	0.47	1244	3.26	1.54	0.47	1305	3.15	1.49	0.47	1342
22	18	3.33	2.11	0.63	1196	3.06	1.94	0.63	1269	2.94	1.86	0.63	1293
22	20	3.50	1.80	0.51	1244	3.26	1.67	0.51	1305	3.15	1.61	0.51	1342
22	22	3.71	1.46	0.39	1293	3.47	1.36	0.39	1366	3.35	1.32	0.39	1391
23	18	3.33	2.24	0.67	1196	3.06	2.06	0.67	1269	2.94	1.98	0.67	1293
23	20	3.50	1.94	0.55	1244	3.26	1.80	0.55	1305	3.15	1.74	0.55	1342
23	22	3.71	1.60	0.43	1293	3.47	1.50	0.43	1366	3.35	1.45	0.43	1391
24	18	3.33	2.38	0.71	1196	3.06	2.18	0.71	1269	2.94	2.10	0.71	1293
24	20	3.50	2.08	0.59	1244	3.26	1.94	0.59	1305	3.15	1.86	0.59	1342
24	22	3.71	1.75	0.47	1293	3.47	1.64	0.47	1366	3.35	1.58	0.47	1391
24	24	3.91	1.38	0.35	1342	3.67	1.30	0.35	1403	3.57	1.26	0.35	1434
25	18	3.33	2.51	0.75	1196	3.06	2.30	0.75	1269	2.94	2.21	0.75	1293
25	20	3.50	2.22	0.63	1244	3.26	2.07	0.63	1305	3.15	1.99	0.63	1342
25	22	3.71	1.90	0.51	1293	3.47	1.78	0.51	1366	3.35	1.72	0.51	1391
25	24	3.91	1.54	0.39	1342	3.67	1.44	0.39	1403	3.57	1.40	0.39	1434
26	18	3.33	2.64	0.79	1196	3.06	2.43	0.79	1269	2.94	2.33	0.79	1293
26	20	3.50	2.36	0.67	1244	3.26	2.20	0.67	1305	3.15	2.12	0.67	1342
26	22	3.71	2.05	0.55	1293	3.47	1.92	0.55	1366	3.35	1.85	0.55	1391
26	24	3.91	1.69	0.43	1342	3.67	1.59	0.43	1403	3.57	1.55	0.43	1434
26	26	4.11	1.29	0.31	1391	3.88	1.21	0.31	1452	3.76	1.18	0.31	1482
27	18	3.33	2.78	0.83	1196	3.06	2.55	0.83	1269	2.94	2.45	0.83	1293
27	20	3.50	2.50	0.71	1244	3.26	2.33	0.71	1305	3.15	2.24	0.71	1342
27	22	3.71	2.20	0.59	1293	3.47	2.06	0.59	1366	3.35	1.99	0.59	1391
27	24	3.91	1.85	0.47	1342	3.67	1.74	0.47	1403	3.57	1.69	0.47	1434
27	26	4.11	1.45	0.35	1391	3.88	1.37	0.35	1452	3.76	1.33	0.35	1482
28	18	3.33	2.91	0.87	1196	3.06	2.67	0.87	1269	2.94	2.57	0.87	1293
28	20	3.50	2.64	0.75	1244	3.26	2.46	0.75	1305	3.15	2.37	0.75	1342
28	22	3.71	2.35	0.63	1293	3.47	2.20	0.63	1366	3.35	2.12	0.63	1391
28	24	3.91	2.01	0.51	1342	3.67	1.88	0.51	1403	3.57	1.83	0.51	1434
28	26	4.11	1.62	0.39	1391	3.88	1.52	0.39	1452	3.76	1.48	0.39	1482
29	18	3.33	3.04	0.91	1196	3.06	2.79	0.91	1269	2.94	2.69	0.91	1293
29	20	3.50	2.78	0.79	1244	3.26	2.59	0.79	1305	3.15	2.49	0.79	1342
29	22	3.71	2.49	0.67	1293	3.47	2.33	0.67	1366	3.35	2.25	0.67	1391
29	24	3.91	2.16	0.55	1342	3.67	2.03	0.55	1403	3.57	1.97	0.55	1434
29	26	4.11	1.78	0.43	1391	3.88	1.68	0.43	1452	3.76	1.63	0.43	1482
30	18	3.33	3.18	0.95	1196	3.06	2.92	0.95	1269	2.94	2.80	0.95	1293
30	20	3.50	2.92	0.83	1244	3.26	2.72	0.83	1305	3.15	2.62	0.83	1342
30	22	3.71	2.64	0.71	1293	3.47	2.47	0.71	1366	3.35	2.39	0.71	1391
30	24	3.91	2.32	0.59	1342	3.67	2.18	0.59	1403	3.57	2.12	0.59	1434
30	26	4.11	1.95	0.47	1391	3.88	1.83	0.47	1452	3.76	1.78	0.47	1482
31	18	3.33	3.31	0.99	1196	3.06	3.04	0.99	1269	2.94	2.92	0.99	1293
31	20	3.50	3.06	0.87	1244	3.26	2.85	0.87	1305	3.15	2.75	0.87	1342
31	22	3.71	2.79	0.75	1293	3.47	2.61	0.75	1366	3.35	2.52	0.75	1391
31	24	3.91	2.48	0.63	1342	3.67	2.32	0.63	1403	3.57	2.26	0.63	1434
31	26	4.11	2.11	0.51	1391	3.88	1.99	0.51	1452	3.76	1.93	0.51	1482
32	18	3.33	3.44	1.03	1196	3.06	3.16	1.03	1269	2.94	3.04	1.03	1293
32	20	3.50	3.20	0.91	1244	3.26	2.98	0.91	1305	3.15	2.87	0.91	1342
32	22	3.71	2.94	0.79	1293	3.47	2.75	0.79	1366	3.35	2.66	0.79	1391
32	24	3.91	2.63	0.67	1342	3.67	2.47	0.67	1403	3.57	2.40	0.67	1434
32	26	4.11	2.28	0.55	1391	3.88	2.14	0.55	1452	3.76	2.08	0.55	1482

NOTE Q :Total capacity (kW) SHF :Sensible heat factor DB :Dry-bulb temperature
SHC :Sensible heat capacity (kW) INPUT :Total power input (W) WB :Wet-bulb temperature

C.3.8 NOISE CRITERIA CURVES

C.3.8.1 Cool Only

MUX-A10WV

FUNCTION	SPL(dB(A))	LINE
COOL	49	●——●

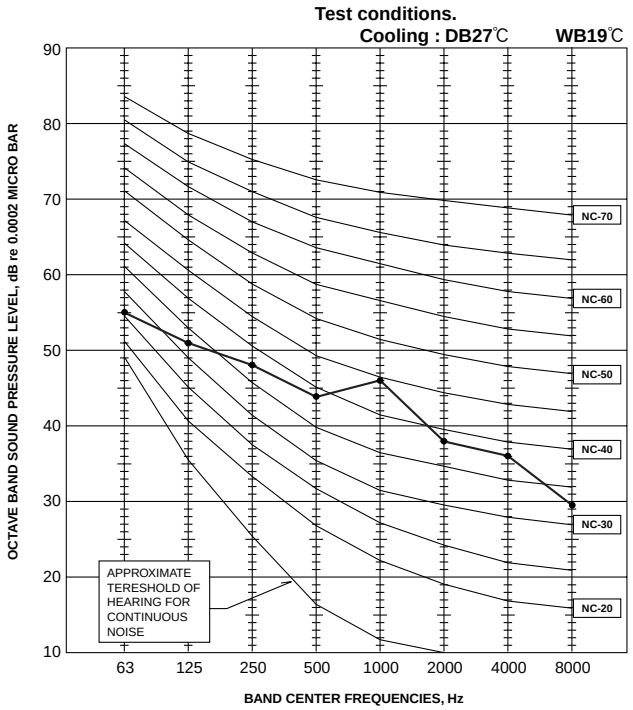

MUX-A19WV
MUX-A20WV
MUX-A25WV

FUNCTION	SPL(dB(A))	LINE
COOL	52	●——●

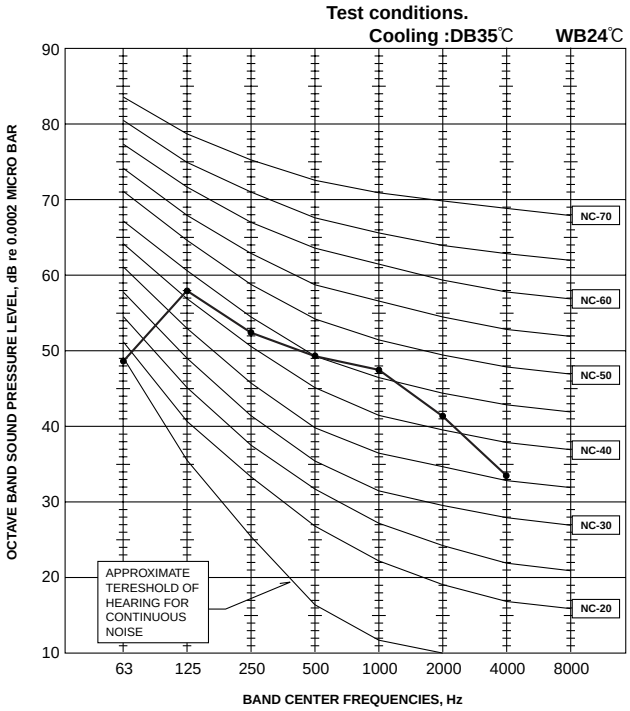

MUX-A22WV

FUNCTION	SPL(dB(A))	LINE
COOL	52	●——●

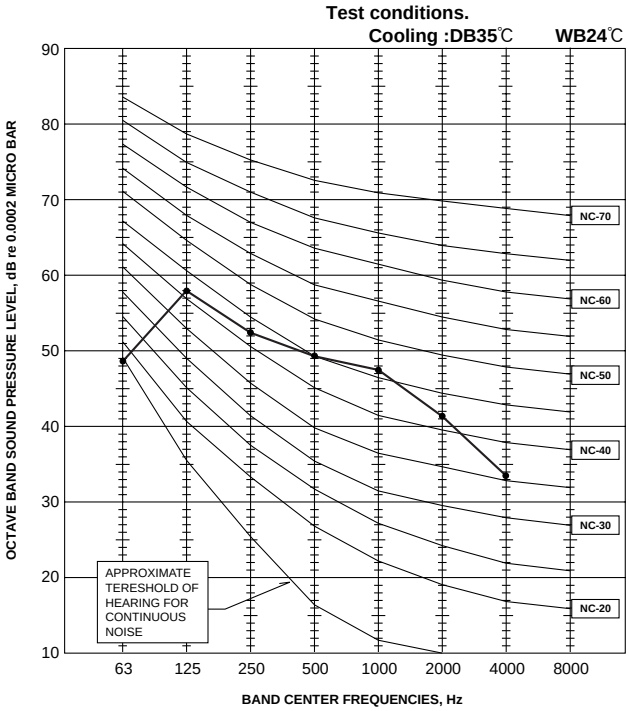

MUX-A26WV

FUNCTION	SPL(dB(A))	LINE
COOL	52	●——●

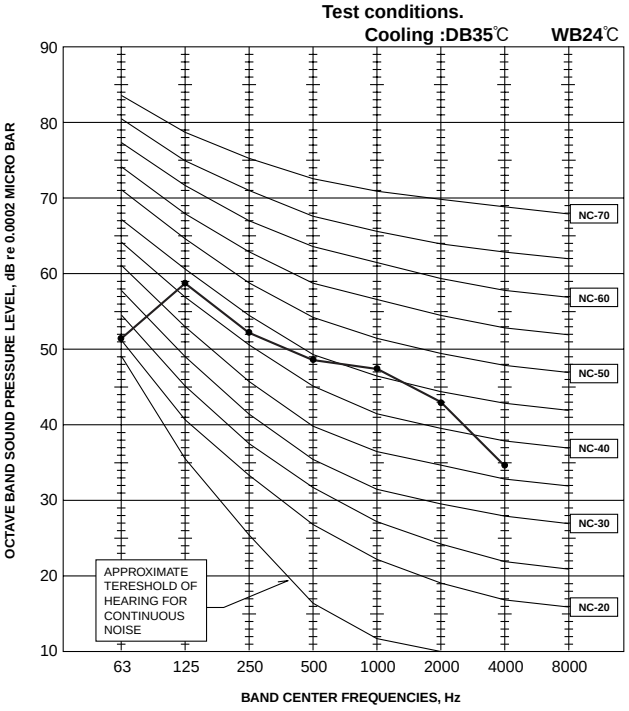

MSC-A07WV

FAN SPEED	FUNCTION	SPL(dB(A))	LINE
High	COOL	36	●——●
	HEAT		

Test conditions,
Cooling : DB27℃ WB19℃
Heating : DB20℃ WB -℃

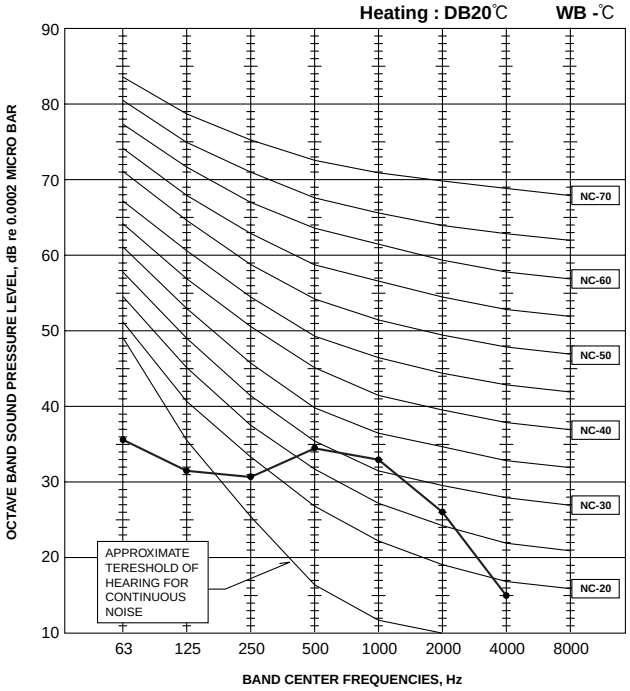

MSC-A09WV

FAN SPEED	FUNCTION	SPL(dB(A))	LINE
High	COOL	36	●——●
	HEAT	39	○- - -○

Test conditions.
Cooling : DB27℃ WB19℃
Heating : DB20℃ WB -℃

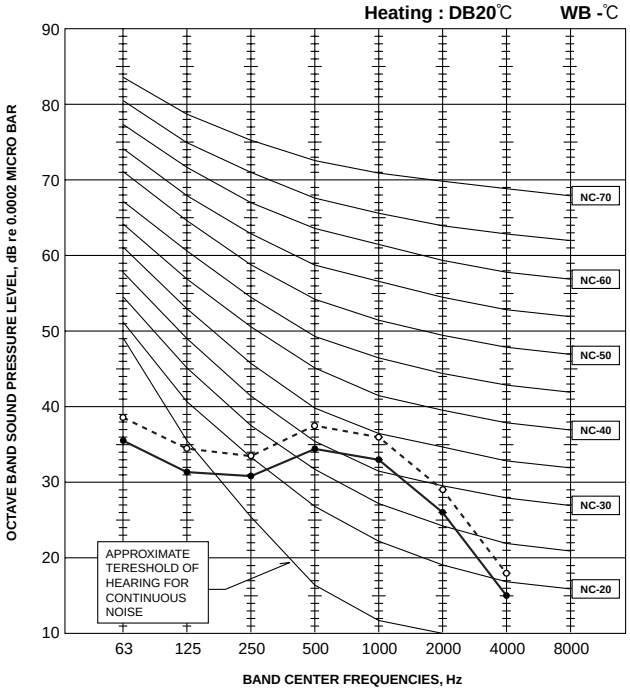

MSC-A12WV

FAN SPEED	FUNCTION	SPL(dB(A))	LINE
High	COOL	40	●——●
	HEAT	39	○- - -○

Test conditions,
Cooling : DB27℃ WB19℃

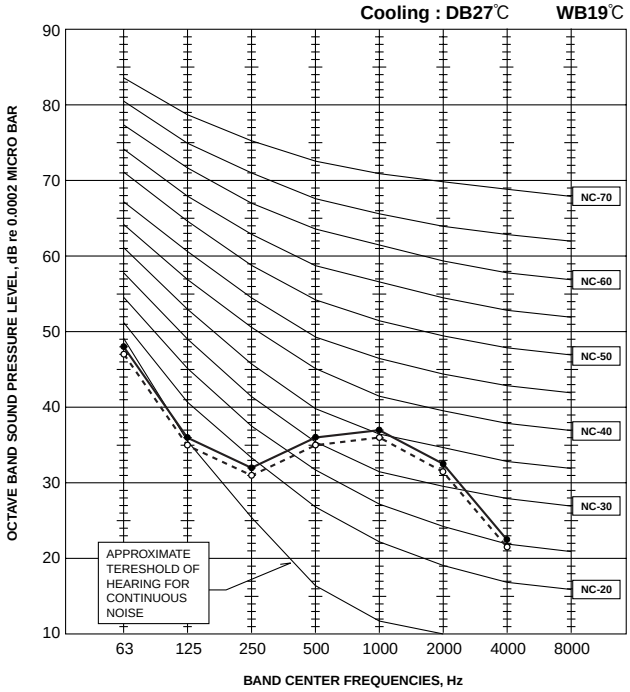

C.3.8.2 Inverter Heat Pump

MXZ-A18WV

FAN SPEED	FUNCTION	SPL(dB(A))	LINE
High	Cooling	49	●——●
High	Heating	50	○——○

Test conditions.
Cooling :DB 35℃ WB 24℃
Heating :DB 7℃ WB 6℃

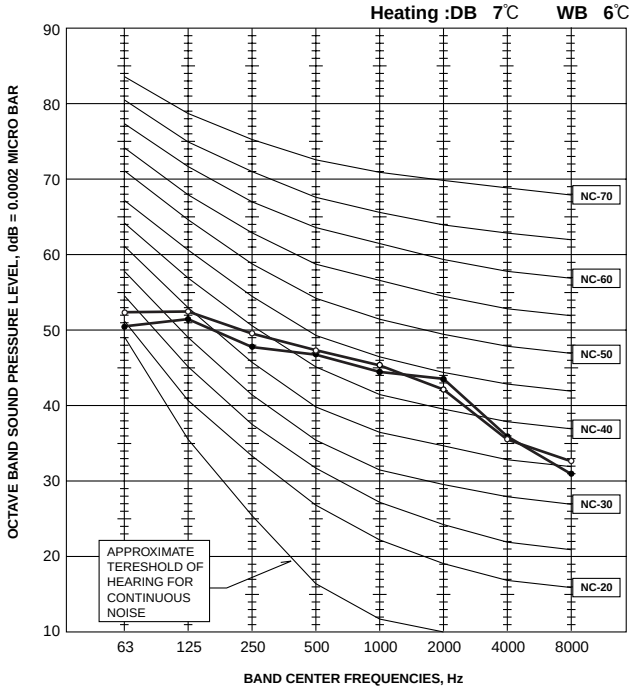

MXZ-A26WV
MXZ-A32WV

FAN SPEED	FUNCTION	SPL(dB(A))	LINE
High	Cooling	46	●——●
High	Heating	48	○——○

Test conditions.
Cooling :DB 35℃ WB 24℃
Heating :DB 7℃ WB 6℃

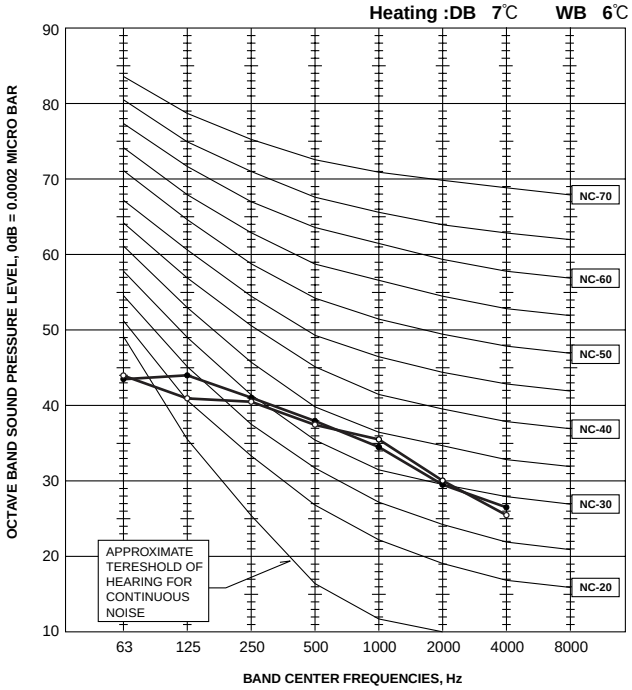

C.3.9 TROUBLESHOOTING

C.3.9.1 MSC-A·WV Series

• The following indication does not depend on the shape of lamp.

flashing

Operation Indicator

· Flashing of the OPERATION INDICATOR lamp (on the left-hand side) indicates possible abnormalities.
· The OPERATION INDICATOR lamp (on the left-hand side) is lighting during normal operation.

❋ Before taking measures, make sure that the symptom reappears, for accurate troubleshooting.

Self check table

No.	Abnormal point	Operation indicator lamp	Symptom	Detection method
1	**MUH or MXZ type** Mis-wiring	0.5-second ON 0.5-second OFF	Outdoor unit does not	When serial signal stops for 4 to 5 seconds after 1st on of 52C relay by POWER turning on.
	MUH or MXZ type Serial signal	1-time flash 2.5-second OFF		When serial signal from outdoor unit stops for 4 to 5 seconds.
2	Indoor coil thermistor Room temperature thermistor	2-time flash 2.5-second OFF	Outdoor unit does not	Detect Indoor coil/room temperature thermistor short or open circuit every 8 seconds during operation.
3	Indoor fan motor	3-time flash 2.5-second OFF	Indoor fan motor repeats 12 seconds ON and 3 minutes OFF. When the indoor fan motor breaks, the fan keeps stopping.	When rotational frequency feedback pulse signal is not emit during 12-second indoor fan operation.
4	**MXZ type** Outdoor power system	5-time flash 2.5-second OFF	Outdoor unit does not	When the compressor operation is continuously three times interrupted by over current protection within 1 minute after start-up , it stops operation.
5	**MUH or MXZ type** Outdoor thermistor	6-time flash 2.5-second OFF	Outdoor unit does not	When the defrost thermistor shorts or opens after the compressor start-up.
6	**MUH or MXZ type** Outdoor control system error	7-time flash 2.5-second OFF	Outdoor unit does not	When it cannot properly read data in the non-volatile memory of outdoor electronic control P.C. board.
7	**MXZ type** Outdoor refrigerant system error	10-time flash 2.5-second OFF	Outdoor unit does not	When the compressor operation has been interrupted by LEV protection continuously 5 minutes, the compressor stops operation.
8	**MXZ type** Operation mode setting	Operation Indicator Lighted Flashing 2.5-second OFF	Outdoor unit operates but indoor unit does not	When the operation mode of each indoor unit is differently set to COOL(includes DRY) and HEAT at same time, the operation mode of indoor unit that has operated at first has the priority.

C.3.9.2 MXZ Series

MXZ-A18WV

LED 1 (Red)	LED 2 (Yellow)	Error mode
Lighting	Lighting	Normal

Symptom: Outdoor unit does not operate.			
Indication		Abnormal point	Detecting method
LED 1 (Red)	LED 2 (Yellow)		
Lighting	Once	Indoor unit and LEV	When the drain abnormality is detected in the indoor unit and the indoor unit coil temperature is too low, or when any abnormality is detected in the components of indoor unit.
Lighting	Twice	Outdoor power system	When the compressor operation has been interrupted by over current protection continuously three times within 1 minute after start-up.
Lighting	7 times	Outdoor control system	When the nonvolatile memory data cannot be read properly on the outdoor electronic control P.C. board.
Lighting	8 times	Active filter module	When active filter module self-protection has been performed continuously three times.
Lighting	9 times	DC voltage sensing circuit	When DC voltage sensing circuit detects 57V or below or 395V or above.

Symptom: It is repeated that outdoor unit stops and restarts 3 minutes later.			
Indication		Abnormal point	Detecting method
LED 1 (Red)	LED 2 (Yellow)		
Lighting	3 times	Discharge temperature thermistor	When a short or open circuit occurs in the discharge temperature thermistor during compressor operating.
Lighting	4 times	Fin temperature thermistor	When a short or open circuit occurs in the fin temperature thermistor during compressor operating.
		P.C. board temperature thermistor	When a short or open circuit occurs in the P.C. board temperature thermistor during compressor operating.
Lighting	5 times	Evaporation temperature thermistor	When a short or open circuit occurs in the evaporation temperature thermistor during compressor operating.
Lighting	5 times	High-pressure protect thermistor	When high-pressure protect thermistor is short or open while compressor is operating.
Lighting	10 times	Gas pipe temperature A thermistor	When a short or open circuit occurs in the gas pipe temperature A thermistor during compressor operating.
		Gas pipe temperature B thermistor	When a short or open circuit occurs in the gas pipe temperature B thermistor during compressor operating.
Twice	Goes out	Overcurrent protection	When overcurrent is applied to the power module.
3 times	Goes out	Discharge temperature overheat protection	When the discharge temperature thermistor detects 116℃ or above. (Protection will be released at 100℃ or below.)
4 times	Goes out	Fin temperature overheat protection	When the fin temperature thermistor detects 87℃ or above.
4 times	Goes out	P.C. board temperature overheat protection	When the P.C. board temperature thermistor detects 70℃ or above.
5 times	Goes out	High-pressure protection	When high-pressure protect thermistor detects 69℃ or more.

MXZ-A18WV

Symptom: Outdoor unit operates (The compressor operates at reduced frequency)			
Indication		Abnormal point	Detecting method
LED 1 (Red)	LED 2 (Yellow)		
Once	Lighting	Current protection	When the outdoor unit input current exceeds 13A.
Twice	Lighting	High-pressure protection	When indoor gas pipe temperature exceeds 55˚C during heating.
Twice	Lighting	Defrosting in cooling	When indoor gas pipe temperature falls to 6˚C or below during cooling.
3 times	Lighting	Discharge temperature protection	When the discharge temperature exceeds 104˚C.
4 times	Lighting	Low discharge temperature protection	When the state with low discharge temperature of which 37˚C or below in COOL and 35˚C or below in HEAT for lasts 20 minutes.
5 times	Lighting	High-pressure protection	When high-pressure protect thermistor detects 58℃ or more.
6 times	Lighting	Overload protection	When the compressor load exceeds the specified value.

Symptom: Outdoor unit operates.			
Indication		Abnormal point	Detecting method
LED 1 (Red)	LED 2 (Yellow)		
Lighting	5 times	Defrost thermistor	When a short or open circuit occurs in the defrost thermistor during heating.
Lighting	6 times	Power factor detection	When the compressor power factor cannot be detected.
8 times	Lighting	Active filter module protection	When active filter module self-protection has been performed.
9 times	Lighting	Service mode	When operating unit with compressor relay connector disconnected.

MXZ-A26WV MXZ-A32WV

LED 1 (Red)	LED 2 (Yellow)	Error mode
Lighting	Lighting	Normal

Symptom: Outdoor unit does not operate.			
Indication		Abnormal point	Detecting method
LED 1 (Red)	LED 2 (Yellow)		
Lighting	Once	Indoor unit and LEV	When the drain abnormality is detected in the indoor unit and the indoor unit coil temperature is too low, or when any abnormality is detected in the components of indoor unit.
Lighting	Twice	Outdoor power system	When the compressor operation has been interrupted by over current protection continuously three times within 1 minute after start-up, or when power factor control module protection or DC control protection is activated three times within 3 minutes after the compressor get started.
Lighting	7 times	Outdoor control system	When the nonvolatile memory data cannot be read properly on the outdoor electronic control P.C. board.

Symptom: It is repeated that outdoor unit stops and restarts 3 minutes later.			
Indication		Abnormal point	Detecting method
LED 1 (Red)	LED 2 (Yellow)		
Lighting	3 times	Discharge temperature thermistor	When a short or open circuit occurs in the discharge temperature thermistor during compressor operating.
Lighting	4 times	Fin temperature thermistor	When a short or open circuit occurs in the fin temperature thermistor during compressor operating.
		P.C. board temperature thermistor	When a short or open circuit occurs in the P.C. board temperature thermistor during compressor operating.
Lighting	5 times	Evaporation temperature thermistor	When a short or open circuit occurs in the evaporation temperature thermistor during compressor operating.
Lighting	5 times	Outdoor heat exchanger temperature thermistor	When outdoor heat exchanger temperature thermistor is short or open while compressor is operating.
Lighting	6 times	Current sensor	When the output from compressor current sensor becomes 25A or more while the compressor is operating.
Lighting	10 times	Gas pipe temperature A thermistor	When a short or open circuit occurs in the gas pipe temperature A thermistor during compressor operating.
		Gas pipe temperature B thermistor	When a short or open circuit occurs in the gas pipe temperature B thermistor during compressor operating.
		Gas pipe temperature C thermistor	When a short or open circuit occurs in the gas pipe temperature C thermistor during compressor operating.
		Gas pipe temperature D thermistor	When a short or open circuit occurs in the gas pipe temperature D thermistor during compressor operating.
Lighting	11 times	Communication error between P.C. boards	When the communication failure between the outdoor electronic control P.C. board and power board occurs twice consecutively.
Lighting	12 times	Zero cross signal error	When zero cross signal cannot be detected while the compressor is operating.
Twice	Goes out	Overcurrent protection	When overcurrent is applied to the power module.
3 times	Goes out	Discharge temperature overheat protection	When the discharge temperature thermistor detects 116℃ or above. (Protection will be released at 100℃ or below.)
4 times	Goes out	Fin temperature overheat protection	When the fin temperature thermistor detects 87℃ or above.

MXZ-A26WV MXZ-A32WV

Symptom: It is repeated that outdoor unit stops and restarts 3 minutes later			
Indication		Abnormal point	Detecting method
LED 1 (Red)	LED 2 (Yellow)		
4 times	Goes out	P.C. board temperature overheat protection	When the P.C. board temperature thermistor detects 70℃ or above.
5 times	Goes out	High-pressure protection	When outdoor heat exchanger temperature thermistor detects 69℃ or more. When high-pressure switch detects 4MPa or more.
8 times	Goes out	Power factor control module protection	When the overcurrent to power factor controller occurs or the output voltage from power factor controller becomes 400V or more.
9 times	Goes out	DC voltage protection	When it's detected that DC voltage becomes 200V or less, or reaches 400V or more.
13 times	Goes out	Fan motor protection	When fan motor current is 2A or more, or when the abnormality is detected in the feedback signal from fan motor.

Symptom: Outdoor unit operates (The compressor operates at reduced frequency)			
Indication		Abnormal point	Detecting method
LED 1 (Red)	LED 2 (Yellow)		
Once	Lighting	Current protection	When the outdoor unit input current exceeds 14.5A.
Twice	Lighting	High-pressure protection	When indoor gas pipe temperature exceeds 55˚C during heating.
Twice	Lighting	Defrosting in cooling	When indoor gas pipe temperature falls to 6˚C or below during cooling.
3 times	Lighting	Discharge temperature protection	When the discharge temperature exceeds 104˚C.
4 times	Lighting	Low discharge temperature protection	When the state with low discharge temperature of which 37˚C or below in COOL and 35˚C or below in HEAT lasts for 20 minutes.
5 times	Lighting	High-pressure protection	When outdoor heat exchanger temperature thermistor detects 58℃ or more.

Symptom: Outdoor unit operates.			
Indication		Abnormal point	Detecting method
LED 1 (Red)	LED 2 (Yellow)		
Lighting	5 times	Defrost thermistor	When a short or open circuit occurs in the defrost thermistor during heating.
9 times	Lighting	Service mode	When the unit operates EMERGENCY OPERATION.

C.3.10 INSTALLATION PROCEDURE

C.3.10.1 MUX-A10WV

These explanation are excerpted from the installation manual.

INSTALLATION DIAGRAM & ACCESSORIES

Before installation
Any structural alternations necessary for the installation must comply with the local building code requirements.

CONSTRAINTS ON INDOOR UNIT INSTALLATION

You should note that indoor units that can be connected to this outdoor unit have the following constraints on them.

- Indoor units with model numbers A07 can be connected. Refer to the table below for possible two-room indoor unit combinations.

* MSC-07RV is applicable to A07 model.

Combination (Models)	
1 combination possible	
A UNIT	B UNIT
A07	A07

FLARED CONNECTIONS

- This unit has flared connections on both indoor and outdoor sides.
- Remove the outdoor units valve cover, then connect the pipe.
- Refrigerant pipes are used to connect the indoor and outdoor units.

Limits		
UNIT No.	A	B
Pipe length per indoor unit	15 m max.	15 m max.
	Total 30 m max.	
Height difference	10 m max.	10 m max.
No. of bends	10 max.	10 max.
	Total 15 max.	

- Be careful not to crush or bend the pipe in pipe bending.
- Refrigerant adjustment ... If pipe length exceeds 10 m, additional refrigerant (R410A) charge is required.
  (The outdoor unit is charged with refrigerant for pipe length up to 10 m.)

A UNIT + B UNIT*	
Pipe length (one-way)	Refrigerant to be added
10 m (A UNIT + B UNIT)	No additional charge
10 – 30 m	10 g/m

* Indoor unit A and B are in the same refrigerant cycle system, so please add enough refrigerant to run both units A and B.

PART TO BE PROVIDED AT YOUR SITE

The parts Ⓐ - Ⓙ in the following table are necessary for one indoor unit.

Ⓐ	Indoor/outdoor unit connecting wire (2-core 1.0 mm²)	1
Ⓑ	Extension pipe	1
Ⓒ	Wall hole sleeve	1
Ⓓ	Wall hole cover	1
Ⓔ	Pipe fixing band (The quantity depends on the pipe length.)	2 to 5
Ⓕ	Fixing screw for Ⓔ 4 × 20 mm (The quantity depends on the pipe length.)	2 to 5
Ⓖ	Piping tape	1
Ⓗ	Putty	1
Ⓘ	Drain hose (or soft PVC. hose, 15 mm inner dia. or hard PVC pipe VP16)	1
Ⓙ	Refrigeration oil	1
Ⓚ	Power supply cord (3-core 1.0 mm²)	1

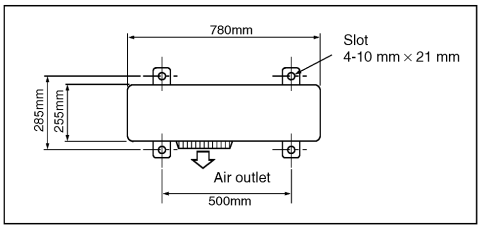

PIPING PREPARATION

① Specifications
Use the refrigerant pipes that meet the following specifications.

Pipe	Outside diameter	Wall thickness	Insulation material
	mm	mm	
For liquid	6.35	0.8	Heat resisting foam plastic Specific gravity 0.045 thickness 8 mm
For gas	9.52	0.8	

- Use a copper pipe or a copper-alloy seamless pipe with a thickness of 0.8 mm. Never use any pipe with a thickness less than 0.8 mm, as the pressure resistance is insufficient.

② Ensure that the 2 refrigerant pipes are insulated to prevent condensation.
③ Refrigerant pipe bending radius must be 100 mm or more.

⚠ CAUTION
Use care to insulation of specified thickness. Excessive thickness prevents storage behind the indoor unit and lack of thickness causes dew drippage.

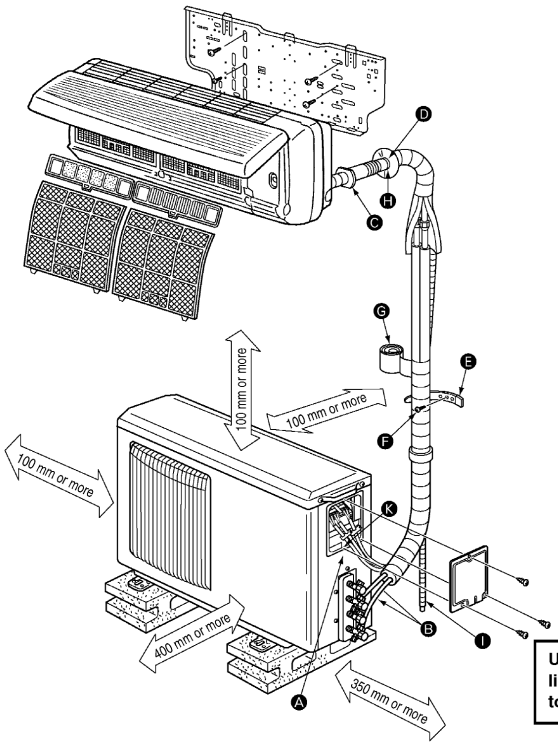

Units should be installed by licensed contractor according to local code requirement.

INDOOR/OUTDOOR UNIT CONNECTING WIRE CONNECTION AND OUTDOOR POWER SUPPLY CORD CONNECTION

- Be sure to lead in the power supply cord ❿ to the air conditioner in accordance with the specification table below and "Technical Standards for Electrical Installation".
- Be sure to use special circuits for room air conditioner.

⚠ CAUTION

Attach an earth leakage breaker according to your installation location. If any breaker is not attached, it may cause a risk of electric shock.

⚠ WARNING

Be sure to comply with "Technical Standards for Electrical Installation", follow this manual and use special circuits for electrical work. If there is a lack of circuit capacity or some deficiency in installation, it may cause a risk of fire or electric shock. Overcurrent that might be produced may include DC substances. Be careful to choose the correct type of overcurrent protection switch.

Rated Voltage	Breaker capacity	
230 V	10 A	Connect to the power switch which has a gap of 3 mm or more when open to interrupt the source power phase. (When the power switch is shut off, it must interrupt all phases.)

- For the power supply cord and the indoor/outdoor unit connecting wires, be sure to use the ones in compliance with the standards.
- Be sure to push the core until it is hidden and pull each cable to make sure that it is not pulled up incomplete insertion may cause a risk of burning the terminal blocks.

Power supply cord Specification	Cable 3-core 1.0 mm², in conformity with Design 245 IEC 57.
Indoor and Outdoor connecting wire Specification	Cable 2-core 1.0 mm², in conformity with Design 245 IEC 57.

- Connect the indoor/outdoor unit connecting wire ❹ from the indoor unit correctly on the terminal block.
- For future servicing, give extra length to connecting wire.

- Peel off both ends of connecting wire (extension wire). When too long, or connected by cutting off the middle, peel off power supply wire to the size as shown in the right.
- Be careful not to contact connecting wire with piping.

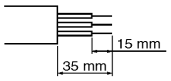

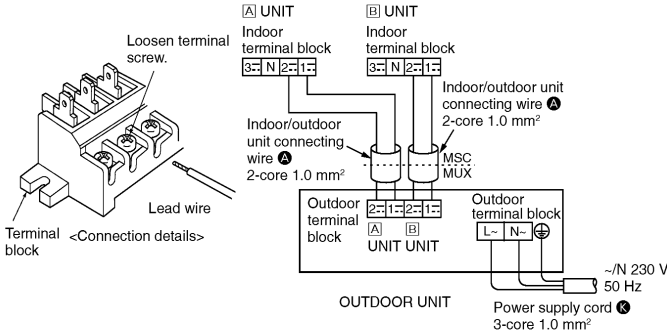

⚠ CAUTION

- Use care not to make mis-wiring.
- Firmly tighten the terminal screws to prevent them from loosening.
- After tightening, pull the wires lightly to confirm that they do not move.

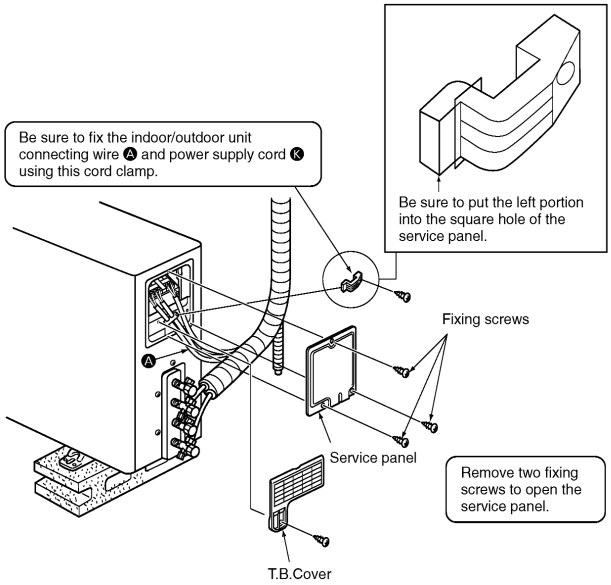

C.3.10.2 MUX-A19/A20/A22/A25/A26WV

These explanation are excerpted from the installation manual.

INSTALLATION DIAGRAM&PARTS

Before installation

This installation manual is only for the outdoor unit installation. In installing the indoor units, refer to the installation manual attached to each indoor unit.
Any structural alternations necessary for the installation must comply with the local building code requirements.

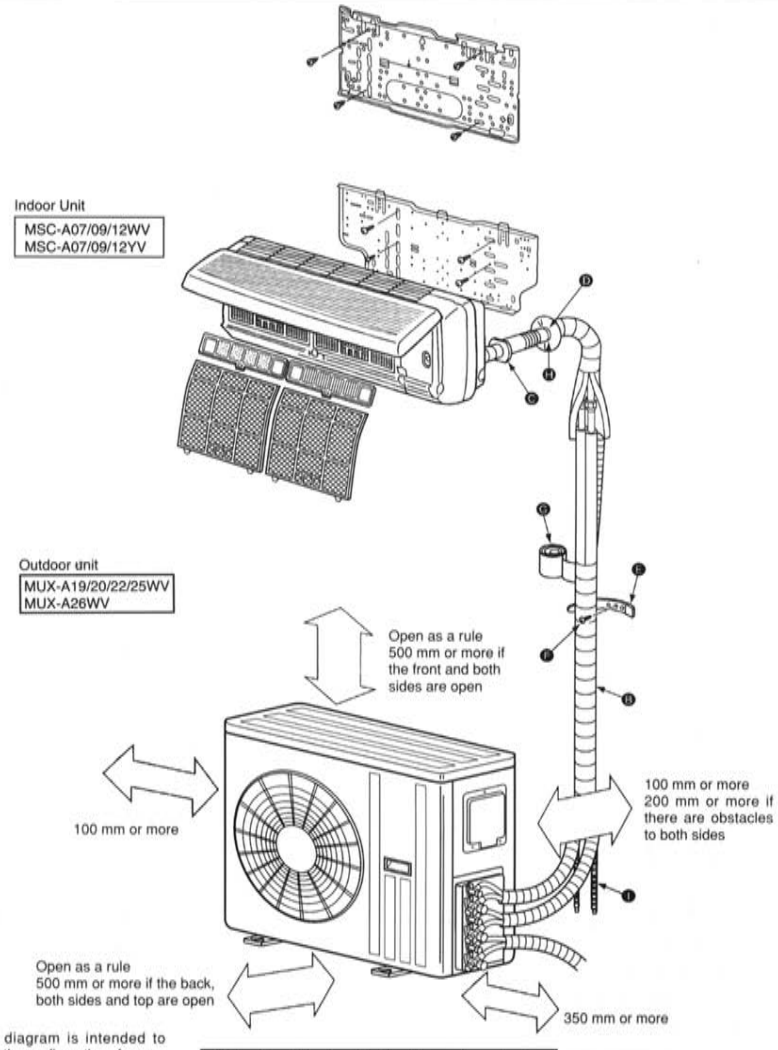

This diagram is intended to show the configuration of accessories.
For actual installation, the outdoor unit is to be turned 180°.

Units should be installed by licensed contractor according to local code requirement.

Note: The dimensions given along the arrows above are required to guarantee the air conditioner's performance. Install the unit in as wide a place as possible for later service or repairs.

Parts to be locally procured

The parts Ⓐ - Ⓙ in the following table are necessary for one indoor unit.

Ⓐ	Indoor/outdoor unit connecting wire (2-core 1.0 mm²)	1
Ⓑ	Extension pipe	1
Ⓒ	Wall hole sleeve	1
Ⓓ	Wall hole cover	1
Ⓔ	Pipe fixing band (The quantity depends on the pipe length.)	2 to 5
Ⓕ	Fixing screw for Ⓔ 4 × 20 mm (The quantity depends on the pipe length.)	2 to 5
Ⓖ	Piping tape	1
Ⓗ	Putty	1
Ⓘ	Drain hose (or soft PVC. hose, 15 mm inner dia. or hard PVC pipe VP16)	1
Ⓙ	Refrigeration oil	1
Ⓚ	Power supply cord (2.5 mm²)	1

Constraints On Indoor Unit Installation

You should note that indoor units that can be connected to this outdoor unit have the following constraints on them.

- Indoor units with model numbers 07, 09 and 12 can be connected. Refer to the table below for possible two-room, three-room and four-room indoor unit combinations.
  - * MSC-07RV is applicable to A07 model.
    MSC-12RV is applicable to A12 model.

Combination (Models)										
*A19 type		A20 type			A25 type		A26 type			
1 combination possible		2 combination possible			1 combination possible		4 combination possible			
A UNIT	B UNIT	A UNIT	B UNIT	C UNIT	A UNIT	B UNIT	A UNIT	B UNIT	C UNIT	D UNIT
A12	A07	A09	A09	A09	A12	A12	A12	A12	A09	A09
–	–	A09	A09	–	–	–	A12	–	A09	–
–	–	–	–	–	–	–	A12	–	A09	A09
–	–	–	–	–	–	–	A12	A12	A09	–

Combination (Models)		
A22 type		
2 combination possible		
A UNIT	B UNIT	C UNIT
A12	A07	A07
A12	A07	–
–	–	–
–	–	–

INDOOR/OUTDOOR WIRE CONNECTION AND OUTDOOR POWER SUPPLY CORD CONNECTION

- Connect the indoor/outdoor unit connecting wire Ⓐ from the indoor unit correctly to the terminal block.
- For future servicing, give extra length to connecting wire.

- Peel off both ends of connecting wire/power supply cord as shown in the right.
- Be careful not to contact connecting wire with piping.

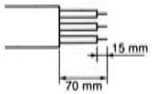

Rated voltage	Breaker capacity	Connect to the power switch which has a gap of 3 mm or more when open to interrupt the source power phase. (When the power switch is shut off, it must interrupt all phases.)
230 V	20 A	

Power supply cord	Cable 2-core 2.5 mm², in conformity with Design 245 IEC 57.
Indoor and Outdoor connecting wire Specification	Cable 2-core 1.0 mm², in conformity with Design 245 IEC 57.

This installation manual is only for the outdoor unit installation. In installing the indoor units, refer to the installation manual attached to each indoor unit.

⚠ CAUTION:
- **Be careful not to make mis-wiring.**
- **Firmly tighten the terminal screws to prevent them from loosening.**
- **After tightening, pull the wires lightly to confirm that they not move.**
- **If the connecting wire is incorrectly connected to the terminal block, the unit does not operate normally.**

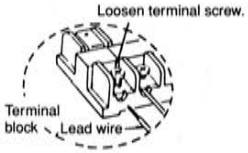

<Connection details>

⚠ WARNING:
Be sure to attach the terminal block covers/panel of the outdoor unit securely. If it is not attached correctly, it could result in a fire or an electric shock due to dust, water, etc.

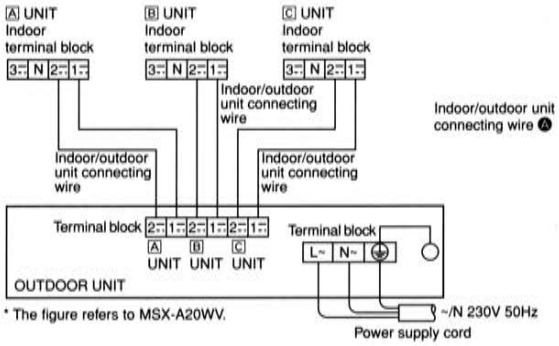

* The figure refers to MSX-A20WV.

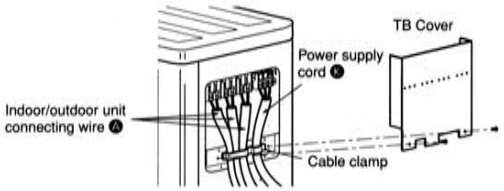

Do not forget to cover the terminal block with the TB cover after connecting the indoor/outdoor wires and the power supply cord to the terminal block correctly.

PIPE LENGTH AND HEIGHT DIFFERENCE

Be careful not to crush or bend the pipe in pipe bending.

<MUX-A19WV/MUX-A25WV>

Limits		
UNIT No.	A	B
Pipe length per indoor unit	15 m max.	15 m max.
Height difference	10 m max.	10 m max.
No. of bends	10 max.	10 max.

<MUX-A20WV/MUX-A22WV>

Limits			
UNIT No.	A	B	C
Pipe length per indoor unit	15 m max.	15 m max.	15 m max.
		Total 30 m max.	
Height difference	10 m max.	10 m max.	10 m max.
No. of bends	10 max.	10 max.	10 max.
		Total 15 max.	

<MUX-A26WV>

Limits				
UNIT No.	A	B	C	D
Pipe length per indoor unit	15 m max.	15 m max.	15 m max.	15 m max.
	Total 30 m max.		Total 30 m max.	
Height difference	10 m max.	10 m max.	10 m max.	10 m max.
No. of bends	10 max.	10 max.	10 max.	10 max.
	Total 15 max.		Total 15 max.	

<MUX-A19WV/MUX-A25WV/MUX-A20WV(A)/MUX-A22WV (A)>
- Refrigerant adjustment ... If pipe length exceeds 7 m, additional refrigerant (R410A) charge is required. (The outdoor unit is charged with refrigerant pipe length up to 7 m.)

<MUX-A20WV(B,C)/MUX-A22WV(B,C)/MUX-A26WV (A, B)(C, D)>
- Refrigerant adjustment ... If pipe length exceeds 10 m, additional refrigerant (R410A) charge is required. (The outdoor unit is charged with refrigerant pipe length up to 10 m.)

<MUX-A19WV/MUX-A25WV>

A UNIT		B UNIT	
Pipe length (one-way)	Refrigerant to be added	Pipe length (one-way)	Refrigerant to be added
Up to 7 m	No additional charge	Up to 7 m	No additional charge
7 – 15 m	20 g/m	7 – 15 m	20 g/m

<MUX-A20WV/MUX-A22WV>

A UNIT		B UNIT + C UNIT*	
Pipe length (one-way)	Refrigerant to be added	Pipe length (one-way)	Refrigerant to be added
7 m	No additional charge	10 m (B UNIT + C UNIT)	No additional charge
7 – 15 m	20 g/m	10 – 30 m	10 g/m

* Indoor unit B and C are in the same refrigerant cycle system, so please add enough refrigerant to run both units B and C.

<MUX-A26WV>

A UNIT + B UNIT*		C UNIT + D UNIT*	
Pipe length (one-way)	Refrigerant to be added	Pipe length (one-way)	Refrigerant to be added
10 m (A UNIT + B UNIT)	No additional charge	10 m (C UNIT + D UNIT)	No additional charge
10 – 30 m	10 g/m	10 – 30 m	10 g/m

* Indoor unit A and B/C and D are in the same refrigerant cycle system, so please add enough refrigerant to run both units A and B/C and D.

SELECTING PIPE SIZE

The diameter of connection pipes differs according to the type and the capacity of indoor unit. Match the diameters of connection pipes for indoor and outdoor units according to the following table.

Pipe		Pipe size for indoor unit	Allowable connection pipe size
		mm	mm
For liquid		6.35	6.35
For gas	A07	9.52	9.52
	A09	9.52	9.52
	A12	12.7	12.7

Valve size for outdoor unit						
		A19 type	A20 type	A22 type	A25 type	A26 type
		mm	mm	mm	mm	mm
A UNIT	Liquid pipe	6.35	6.35	6.35	6.35	6.35
	Gas pipe	12.7	9.52	12.7	12.7	12.7
B UNIT	Liquid pipe	6.35	6.35	6.35	6.35	6.35
	Gas pipe	9.52	9.52	9.52	12.7	12.7
C UNIT	Liquid pipe	—	6.35	6.35	—	6.35
	Gas pipe	—	9.52	9.52	—	9.52
D UNIT	Liquid pipe	—	—	—	—	6.35
	Gas pipe	—	—	—	—	9.52

C.3.10.3 MXZ-A18WV

These explanation are excerpted from the installation manual.

INSTALLATION DIAGRAM&ACCESSORIES

Before installation

This installation manual is only for the outdoor unit installation. In installing the indoor units, refer to the installation manual attached to each indoor unit.
Any structual alternations necessary for the installation must comply with the local building code requirements.

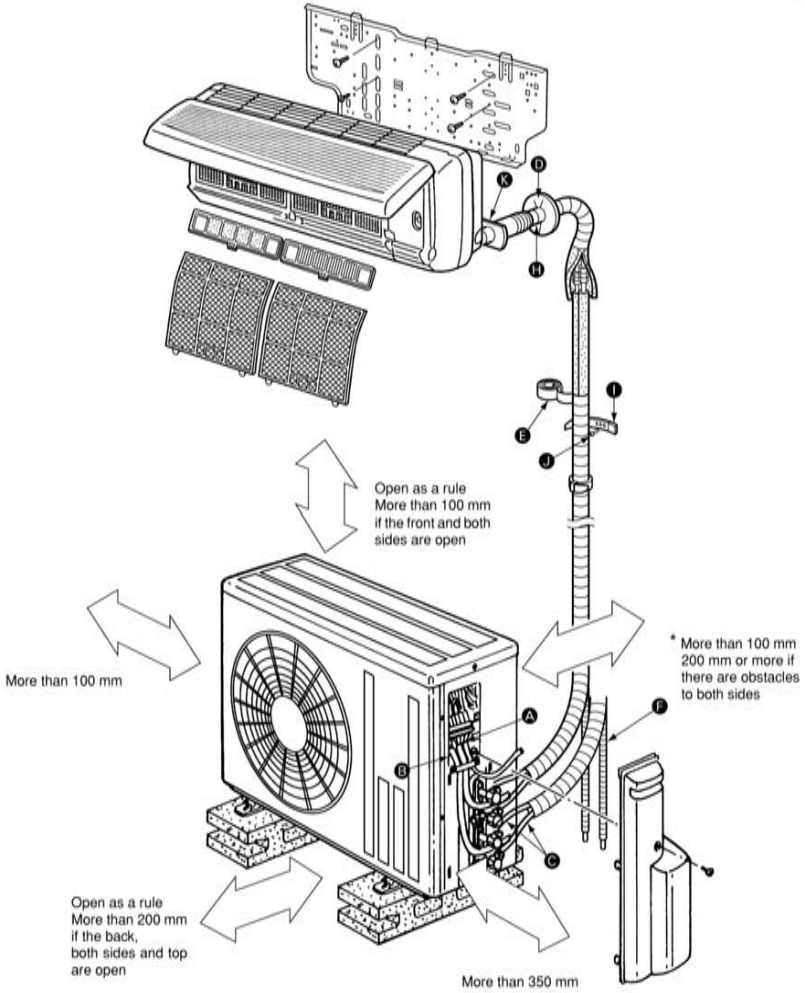

*** Note:**
The dimensions given along the arrows above are required to guarantee the air conditioner's performance. Install the unit in as wide a place as possible for later service or repairs.

ACCESSORIES

Check the following parts before to installation.
<Outdoor unit>

❶	Drain socket	1
❷	Drain cap	2

Parts to be locally procured

Ⓐ	Power supply cord (3-core 2.5 mm²)	1
Ⓑ	Indoor/outdoor unit connecting wire (2-core 1.0 mm²/1.5 mm²)	1
Ⓒ	Extension pipe According to "Selecting pipe size"	1
Ⓓ	Wall hole cover	1
Ⓔ	Piping tape	1
Ⓕ	Extension drain hose (or soft vinyl chloride hose of 15 mm in internal dia. or hard vinyl chloride pipe VP16)	1
Ⓖ	Refrigeration oil	Little amount
Ⓗ	Putty	1
Ⓘ	Pipe fixing band (The number depends on the pipe length.)	2 to 7
Ⓙ	Fixing screw for Ⓘ (The number depends on the pipe length.)	2 to 7
Ⓚ	Wall hole sleeve	1
Ⓛ	Soft vinyl chloride hose of 25 mm in internal dia. or hard vinyl chloride pipe VP25	1

Note:
Do not use the drain socket and the drain cap in the cold region.
Drain may freeze and it makes the fan stop.

- The "Q'ty" for Ⓑ to Ⓚ in the above table is the quantity to be used per indoor unit.

⚠ WARNING:
Be sure to use specified accessories and supplied parts for installation work. If there is some deficiency in parts, it may cause a risk of fire, electric shock, injury by a unit fall or water leakage.

Constraints On Indoor Unit Installation

You should note that indoor unit that can be connected to this outdoor unit have the following constraints on them.

- Refer to the table below for possible two-room indoor unit combinations.

Combination (Models) · · · · 6 combinations possible	
MSC-07+MSC-07	MSC-07+MSC-09
MSC-07+MSC-12	MSC-09+MSC-09
MSC-09+MSC-12	MSC-12+MSC-12

INDOOR/OUTDOOR WIRE CONNECTION AND OUTDOOR POWER SUPPLY CORD CONNECTION

- Be sure to lead in the power supply cord Ⓐ to the air conditioner in accordance with the specification table below and "Technical Standards for Electrical Installation".
- Be sure to use special circuits for room air conditioner.

⚠ CAUTION:
Attach an earth leakage breaker according to your installation location. If any breaker is not attached, it may cause a risk of electric shock.

⚠ WARNING:
Be sure to comply with "Technical Standards for Electrical Installation", follow this manual and use special circuits for electrical work. If there is a lack of circuit capacity or some deficiency in installation, it may cause a risk of fire or electric shock.
Overcurrent that might be produced may include DC substances. Be careful to choose the correct type of overcurrent protection switch.

Rated Voltage	Breaker capacity	Connect to the supply terminals and leave a contact separation of at least 3 mm at each pole to disconnect the source power pole. (When the power switch is shut off, it must disconnect all poles.)
230 V	20 A	

- Peel off both ends of the cables as shown in the right.
- Take care not to let the cables contact the pipes inside the unit.
- Take enough care to connect the indoor/outdoor unit connecting wire correctly between the respective indoor units and the outdoor unit.

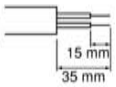

- For the power supply cord and the indoor/outdoor unit connecting wires, be sure to use the ones in compliance with the standards.
- Be sure to push the core until it is hidden and pull each cable to make sure that it is not pulled up incomplete insertion may cause a risk of burning the terminal blocks.

Power supply cord Specification	Cable 3-core 2.5 mm², in conformity with Design 245 IEC 57.
Indoor and Outdoor connecting wire Specification	Cable 2-core 1.0/1.5 mm², in conformity with Design 245 IEC 57.

This installation manual is only for the outdoor unit installation. In installing the indoor units, refer to the installation manual attached to each indoor unit.

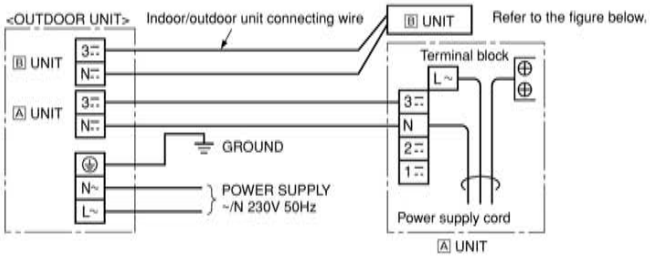

① Remove the service panel.
② Remove fixing screw of terminal cover.
③ Connect the indoor/outdoor wire and power supply cable to the terminal block.
④ Replace the terminal cover securely.

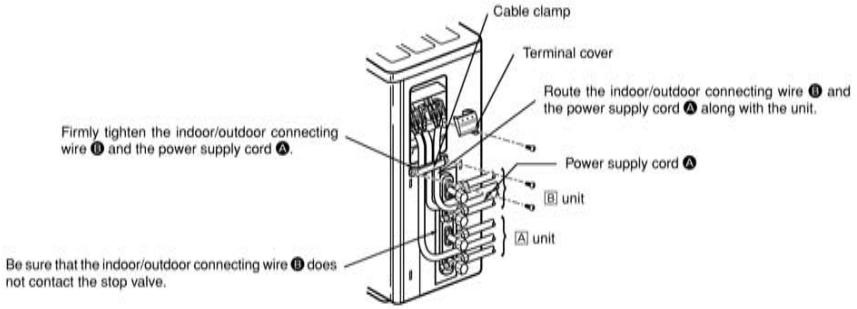

⚠ WARNING:
- **Be sure to attach the service panel of the outdoor unit securely, otherwise it may result in a fire or an electric shock from dust or water.**
- **Use the indoor/outdoor unit connecting wire that meets the Standards to connect the indoor and outdoor units and fix the wire to the terminal block securely so that no external force is conveyed to the connecting section of the terminal block. Incomplete connection or fixing of the wire could result in a fire.**
- **Be sure to attach the terminal block cover on the both indoor and outdoor units. If the terminal block cover is incorrectly attached, it may cause a risk of fire or electric shock due to dust or water penetration.**

FLARED CONNECTIONS

PIPE LENGTH AND HEIGHT DIFFERENCE

Limits	
Pipe length per indoor unit	20 m max.
Total pipe length for multi-system	30 m max.
Height difference	10 m max.
No. of bends per indoor unit	15 max.
Total No. of bends for multi-system	30 max.

Refrigerant adjustment ..... If pipe length exceeds 20 m, additional refrigerant (R410A) charge is required. (The outdoor unit is charged with refrigerant for total pipe length up to 20 m.)

Pipe length	Up to 20 m	No additional charge is required.
	Exceeding 20 m	Additional charge is required. (Refer to the table below.)
Refrigerant to be added	20 g/m × (refrigerant piping length(m)-20)	

Since the outdoor unit for this model has refrigerant filled for connection pipes, do not fill any additional refrigerant. Do not also exceed the allowable length of pipes given in the table above in piping work.

- For pipe size, see the table below.

SELECTING PIPE SIZE

The diameter of connection pipes differs according to the type and capacity of indoor units. Match the diameters of connection pipes for indoor and outdoor units according to the following table.

Model name	Pipe size for indoor unit		Allowable connection pipe size
MSC-07	Liquid pipe	ø6.35 mm	ø6.35 mm
MSC-09	Gas pipe	ø9.52 mm	ø9.52 mm
MSC-12	Liquid pipe	ø6.35 mm	ø6.35 mm
	Gas pipe	ø12.7 mm	ø12.7 mm

Valve size for outdoor unit		
A UNIT	Liquid pipe	ø6.35 mm
	Gas pipe	ø9.52 mm
B UNIT	Liquid pipe	ø6.35 mm
	Gas pipe	ø9.52 mm

- If the diameter of connection pipes does not match the diameter of pipe end connections, use optional different-diameter joints.
- When connecting the model MSC-A12 to either outdoor unit A or B, use optional different-diameter joints (MAC-A454JP) because the valve size of gas pipes for the outdoor unit is ø9.52 mm.

C.3.10.4 MXZ-A26/A32WV

These explanation are excerpted from the installation manual.

INSTALLATION DIAGRAM&ACCESSORIES

Before installation

This installation manual is only for the outdoor unit installation. In installing the indoor units, refer to the installation manual attached to each indoor unit.
Any structual alternations necessary for the installation must comply with the local building code requirements.

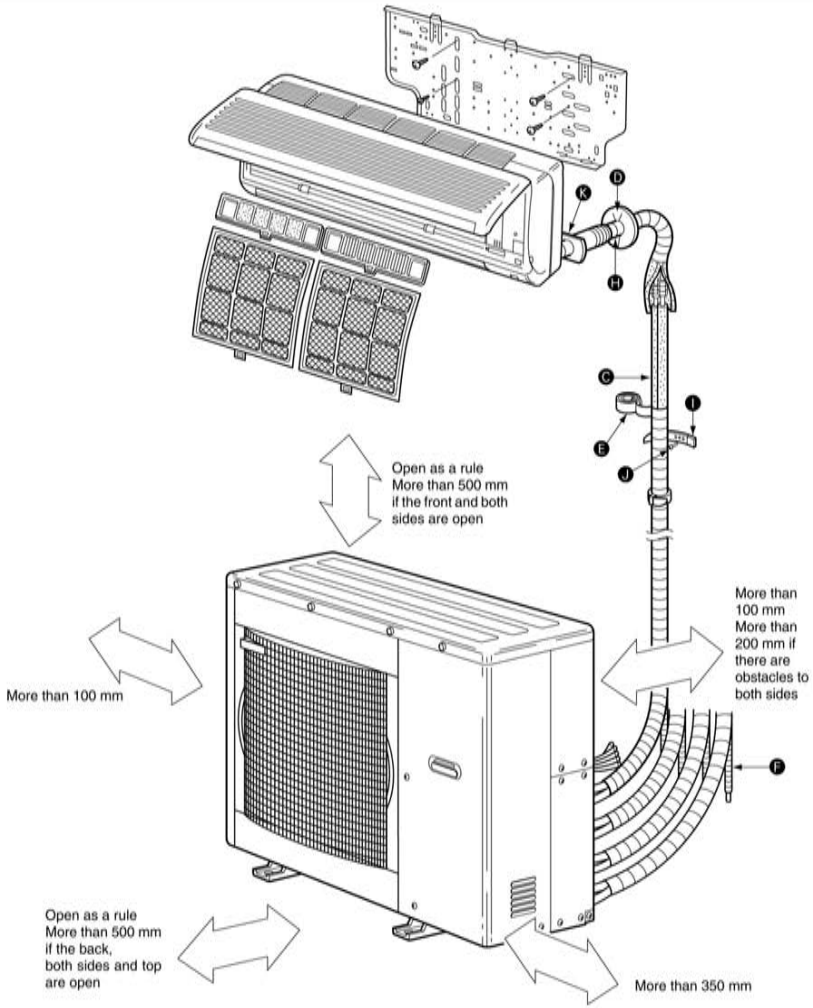

Note:
The dimensions given along the arrows above are required to guarantee the air conditioner's performance. Install the unit in as wide a place as possible for later service or repairs.

ACCESSORIES

Check the fllowing parts before installation.
<Outdoor unit>

❶	Drain socket	1
❷	Drain cap	2

Parts to be locally procured

Ⓐ	Power supply cord (3-core 2.5 mm²)	1
Ⓑ	Indoor/outdoor unit connecting wire (2-core 1.0 mm²/1.5 mm²)	1
Ⓒ	Extension pipe According to "Selecting pipe size"	1
Ⓓ	Wall hole cover	1
Ⓔ	Piping tape	1
Ⓕ	Extension drain hose (or soft vinyl chloride hose of 15 mm in internal dia. or hard vinyl chloride pipe VP16)	1
Ⓖ	Refrigeration oil	Little amount
Ⓗ	Putty	1
Ⓘ	Pipe fixing band (The number depends on the pipe length.)	2 to 7
Ⓙ	Fixing screw for Ⓘ (The number depends on the pipe length.)	2 to 7
Ⓚ	Wall hole sleeve	1
Ⓛ	Soft vinyl chloride hose of 25 mm in internal dia. or hard vinyl chloride pipe VP25	1

NOTE:
- **Do not use the drain socket and the drain cap in the cold region. Drain may freeze and it makes the fan stop.**
- The "Q'ty" for Ⓑ to Ⓚ in the above table is the quantity to be used per indoor unit.

⚠ **WARNING:**
Be sure to use specified accessories and supplied parts for installation work. If there is some deficiency in parts, it may cause a risk of fire, electric shock, injury by a unit fall or water leakage.

Constraints On Indoor Unit Installation

You should note that indoor unit that can be connected to this outdoor unit have the following constraints on them.
- Indoor units with model numbers 07, 09, 12, 13, 18, 24 and 26 can be connected. Refer to the table below for possible two-room, three-room and four-room indoor unit combinations. Four-room indoor unit combination is only available for MXZ-A32WV.

MXZ-A26WV/MXZ-A32WV Combination

2 UNIT	07+07	07+09	07+12(13)	07+18	07+24	07+26	09+09
MXZ-A26WV	09+12(13)	09+18	09+24	09+26	12(13)+12(13)	12(13)+18	12(13)+24
MXZ-A32WV	12(13)+26	18+18	18+24	18+26	24+24	24+26	
3 UNIT	07+07+07	07+07+09	07+07+12(13)	07+07+18	07+07+24	07+07+26	07+09+09
MXZ-A26WV	07+09+12(13)	07+09+18	07+09+24	07+09+26	07+12(13)+12(13)	07+12(13)+18	07+12(13)+24
MXZ-A32WV	07+12(13)+26	07+18+18	07+18+24	07+18+26	09+09+09	09+09+12(13)	09+09+18
	09+09+24	09+09+26	09+12(13)+12(13)	09+12(13)+18	09+12(13)+24	09+12(13)+26	09+18+18
	09+18+24	12(13)+12(13)+12(13)	12(13)+12(13)+18	12(13)+12(13)+24	12(13)+12(13)+26	12(13)+18+18	12(13)+18+24
4 UNIT	07+07+07+07	07+07+07+09	07+07+07+12(13)	07+07+07+18	07+07+07+24	07+07+07+26	07+07+09+09
MXZ-A32WV	07+07+09+12(13)	07+07+09+18	07+07+09+24	07+07+09+26	07+07+12(13)+12(13)	07+07+12(13)+18	07+07+12(13)+24
	07+07+18+18	07+09+09+09	07+09+09+12(13)	07+09+09+18	07+09+09+24	07+09+12(13)+12(13)	07+09+12(13)+18
	07+09+12(13)+24	07+12(13)+12(13)+12(13)	07+12(13)+12(13)+18	09+09+09+09	09+09+09+12(13)	09+09+09+18	09+09+09+24
	09+09+12(13)+12(13)	09+09+12(13)+18	09+12(13)+12(13)+12(13)	12(13)+12(13)+12(13)+12(13)			

INDOOR/OUTDOOR WIRE CONNECTION AND OUTDOOR POWER SUPPLY CORD CONNECTION

- Be sure to lead in the power supply cord Ⓐ to the air conditioner in accordance with the specification table below and "Technical Standards for Electrical Installation".
- Be sure to use special circuits for room air conditioner.

⚠ CAUTION:
Attach an earth leakage breaker according to your installation location. If any breaker is not attached, it may cause a risk of electric shock.

⚠ WARNING:
Be sure to comply with "Technical Standards for Electrical Installation", follow this manual and use special circuits for electrical work. If there is a lack of circuit capacity or some deficiency in installation, it may cause a risk of fire or electric shock.
Overcurrent that might be produced may include DC substances. Be careful to choose the correct type of overcurrent protection switch.

Rated Voltage	Breaker capacity	
230 V	25 A	Connect to the supply terminals and leave a contact separation of at least 3 mm at each pole to disconnect the source power pole. (When the power switch is shut off, it must disconnect all poles.)

- Peel off both ends of the cables as shown in the right.
- Take care not to let the cables contact the pipes inside the unit.
- Take enough care to connect the indoor/outdoor unit connecting wire correctly between the respective indoor units and the outdoor unit.

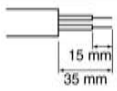

- For the power supply cord and the indoor/outdoor unit connecting wires, be sure to use the ones in compliance with the standards.
- Be sure to push the core until it is hidden and pull each cable to make sure that it is not pulled up incomplete insertion may cause a risk of burning the terminal blocks.

Power supply cord Specification	Cable 3-core 2.5 mm², in conformity with Design 245 IEC 57.
Indoor and Outdoor connecting wire Specification	Cable 2-core 1.0/1.5 mm², in conformity with Design 245 IEC 57.

This installation manual is only for the outdoor unit installation. In installing the indoor units, refer to the installation manual attached to each indoor unit.

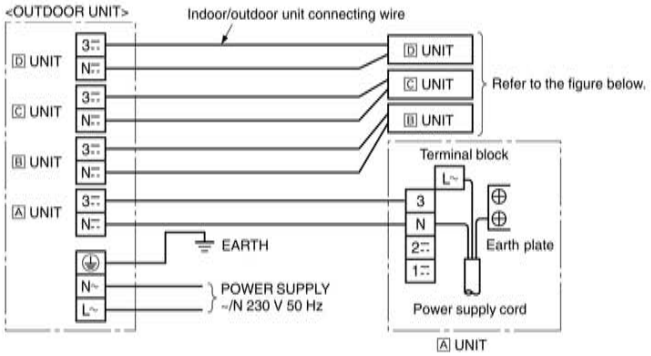

⚠ WARNING:
Use the indoor/outdoor unit connecting wire that meets the Standards to connect the indoor and outdoor units and fix the wire to the terminal block securely so that no external force is conveyed to the connecting section of the terminal block. Incomplete connection or fixing of the wire could result in a fire.

- Give extra length to both power supply cord Ⓐ and indoor/outdoor unit connecting wire Ⓑ taking later service into account.
- After making connections between both power supply cord Ⓐ and indoor/outdoor unit connecting wire Ⓑ, be sure to fix both cable and wire with cable clamps.

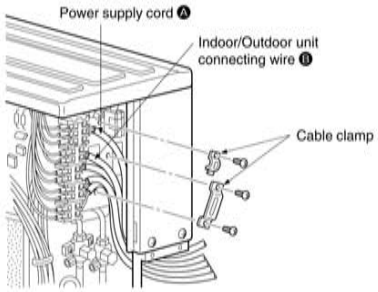

⚠ WARNING:
Be sure to attach the terminal block covers (panel) of both indoor and outdoor units. If there is some deficiency in terminal block cover (panel) attachment, it may cause a risk of fire or electric shock due to dust or water.

FLARED CONNECTIONS

PIPE LENGTH AND HEIGHT DIFFERENCE

Limits	A26WV	A32WV
Pipe length per indoor unit	25 m max.	25 m max.
Total pipe length for multi-system	50 m max.	70 m max.
Height difference	10 m max.	10 m max.
No. of bends per indoor unit	25 max.	25 max.
Total No. of bends for multi-system	50 max.	70 max.

Refrigerant adjustment ..... If pipe length exceeds 40 m, additional refrigerant (R410A) charge is required. (The outdoor unit is charged with refrigerant for total pipe length up to 40 m.)

Pipe length	Up to 40 m	No additional charge is required.
	Exceeding 40 m	Additional charge is required. (Refer to the table below.)
Refrigerant to be added	20 g/m × (refrigerant piping length(m)-40)	

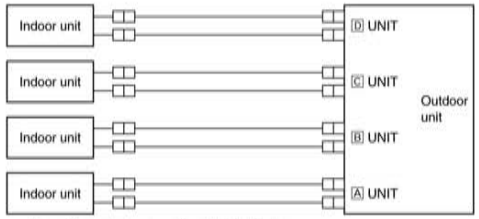

(MXZ-A32WV)

- For pipe size, see the table below.

SELECTING PIPE SIZE

The diameter of connection pipes differs according to the type and capacity of indoor units. Match the diameters of connection pipes for indoor and outdoor units according to the following table.

Model name	Pipe size for indoor unit		Allowable connection pipe size
07	Liquid pipe	ø6.35 mm	ø6.35 mm
09	Gas pipe	ø9.52 mm	ø9.52 mm
12	Liquid pipe	ø6.35 mm	ø6.35 mm
13	Gas pipe	ø9.52/ø12.7 mm	ø9.52/ø12.7 mm
18	Liquid pipe	ø6.35 mm	ø6.35 mm
	Gas pipe	ø12.7 mm	ø12.7 mm
24	Liquid pipe	ø6.35 mm	ø6.35 mm
	Gas pipe	ø15.88 mm	ø15.88 mm
26	Liquid pipe	ø9.52 mm	ø9.52 mm
	Gas pipe	ø15.88 mm	ø15.88 mm

MXZ-A32WV

Valve size for outdoor unit		
A UNIT	Liquid pipe	ø6.35 mm
	Gas pipe	ø12.7 mm
B UNIT	Liquid pipe	ø6.35 mm
	Gas pipe	ø12.7 mm
C UNIT	Liquid pipe	ø6.35 mm
	Gas pipe	ø9.52 mm
D UNIT	Liquid pipe	ø6.35 mm
	Gas pipe	ø9.52 mm

MXZ-A26WV

Valve size for outdoor unit		
A UNIT	Liquid pipe	ø6.35 mm
	Gas pipe	ø12.7 mm
B UNIT	Liquid pipe	ø6.35 mm
	Gas pipe	ø9.52 mm
C UNIT	Liquid pipe	ø6.35 mm
	Gas pipe	ø9.52 mm

* **Connections at outdoor unit are described as unit A, B, C and D below corresponding to the indication on each valve.**

- If the diameter of connection pipes does not match the diameter of pipe end connections, use optional different-diameter joints.
- When connecting the model 12, 13 or 18 to either unit A or B for MXZ-A32WV and B or C for MXZ-A26WV, use optional different-diameter joints MAC-A454JP because the valve size of gas pipes for the outdoor unit is ø9.52 mm. (No need to use different-diameter joints if the diameter of the pipe is ø9.52 mm.)
- When connecting the model 07 or 09 to either unit A or B for MXZ-A32WV and A for MXZ-A26WV, use optional different-diameter joints MAC-A455JP because the valve size of gas pipes for the outdoor unit is ø12.7 mm.
- When connecting the model 24 to either unit A or B for MXZ-A32WV and A for MXZ-A26WV, use optional different-diameter joints MAC-A456JP because the valve size of gas pipes for the outdoor unit is ø12.7 mm.
- **Connect the model 26 to unit A only.**
  Use optional different-diameter joints MAC-A456JP because the valve size of gas pipes for the outdoor unit is ø12.7 mm and PAC-493PI because the valve size of liquid pipe is ø6.35 mm.

C.3.11 MICROPROCESSOR CONTROL

C.3.11.1 MU/MUH/MUX Series

MSC-A07WV MU-A07WV MUH-A07WV MUX-A10WV MUX-A22WV
MSC-A09WV MU-A09WV MUH-A09WV MUX-A19WV MUX-A25WV
MSC-A12WV MU-A12WV MUH-A12WV MUX-A20WV MUX-A26WV

Once the operation mode are set, the same operation mode can be repeated by simply turning the OPERATE/STOP (ON/OFF) button ON. Indoor unit receives the signal with a beep tone.
When the system turns off, 3-minute time delay will operate to protect system from overload and compressor will not restart for 3 minutes.

WIRELESS REMOTE CONTROLLER

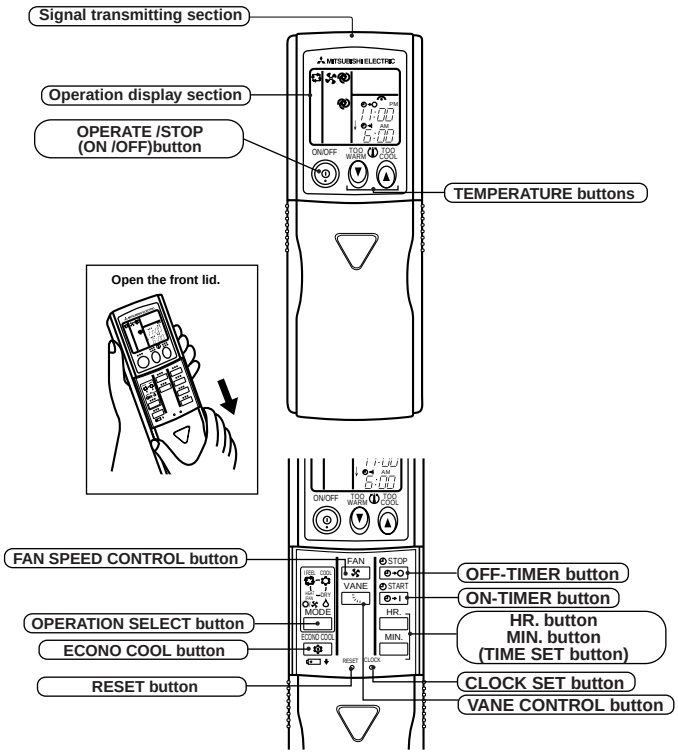

INDOOR UNIT DISPLAY SECTION

Operation Indicator lamp

The operation indicator at the right side of the indoor unit indicates the operation state.

- The following indication does not depend on the shape of lamp.

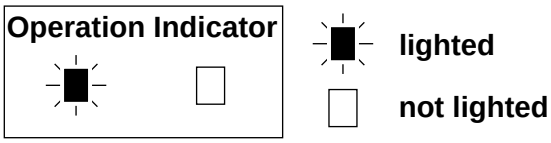

Indication	Operation state	Difference between target temperature and room temperature
	This shows that the air conditioner is operating to reach the target temperature. Please wait until the target temperature is obtained.	Approx. 2 ℃ or more
	This shows that the room temperature is approaching the target temperature.	Approx. 2 ℃ or less

a. COOL ( ) OPERATION

(1) Press OPERATE/STOP(ON/OFF) button. OPERATION INDICATOR lamp of the indoor unit turns on with a beep tone.
(2) Select COOL mode with the OPERATION SELECT button.
(3) Press TEMPERATURE buttons (TOO WARM or TOO COOL button)to select the desired temperature.
The setting range is 16 ~ 31°C

1. Thermostat control

Thermostat is ON or OFF by difference between room temperature and set temperature

Difference between room temperature and set temperature during operation

Initial temperature difference	Thermostat
Room temperature minus set temperature : 0.3 ℃ or more	ON
Room temperature minus set temperature : less than -0.3 ℃	OFF

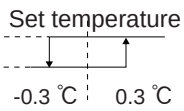

2. Indoor fan speed control

Indoor fan operates continuously at the set speed by FAN SPEED CONTROL button regardless of thermostat's OFF-ON.
In Auto the fan speed is as follows.

Difference between room temperature and set temperature during operation

Initial temperature difference	Fan speed
Room temperature minus set temperature : 1.7 degrees or more	High
Room temperature minus set temperature : Between 1 and 1.7 degrees	Med.
Room temperature minus set temperature : less than 1 degree	Low

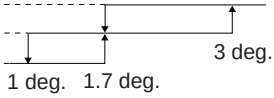

3. Coil frost prevention

① Temperature control

When the indoor coil thermistor RT12 reads 4°C or below(MSC-A07/A09WV) / 0°C or below(MSC-A12WV) for 5 minutes, the coil frost prevention mode starts.

The indoor fan operates at the set speed and the compressor stops for 5 minutes.
After that, if RT12 still reads below 4°C (MSC-A07/A09WV) / 0°C (MSC-A12WV), this mode is prolonged until the RT12 reads over 4°C (MSC-A07/A09WV) / 0°C (MSC-A12WV).

② Time control

When the three conditions as follows have been satisfied for 1 hour and 45 minutes, the compressor stops for 3 minutes.
The indoor fan operates at the set speed.
a. Compressor has been continuously operating.
b. Indoor fan speed is Low or Med.
c. Room temperature is below 26°C.
When compressor stops, the accumulated time is cancelled. When compressor restarts, time counting starts from the beginning.
Time counting also stops temporarily when the indoor fan speed becomes High or the room temperature exceeds 26°C. However, when two of the above conditions (b.and c.) are satisfied again, time accumulation is resumed.

Operation chart

Example

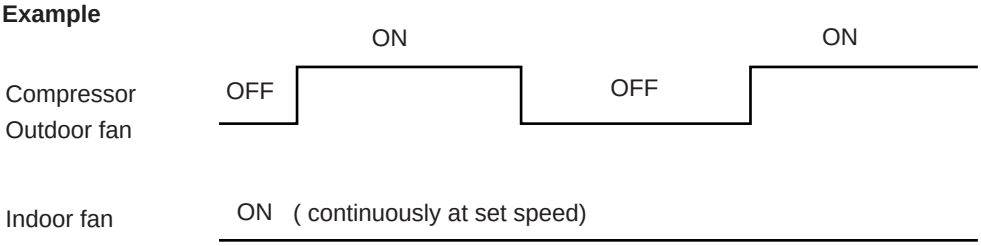

b. DRY ( ) OPERATION

(1) Press OPERATE/STOP(ON/OFF) button.
OPERATION INDICATOR lamp of the indoor unit turns on with a beep tone.
(2) Select DRY mode with the OPERATION SELECT button.
(3) The microprocessor reads the room temperature and determines the set temperature. Set temperature is as shown on the right chart.
DRY operation will not function when the room temperature is 13°C or below.
(4) When DRY operation functions the fan speed is lower than COOL operation except at (fan speed) Low.

The system for dry operation uses the same refrigerant circuit as the cooling circuit.
The compressor and the indoor fan are controlled by the room temperature.

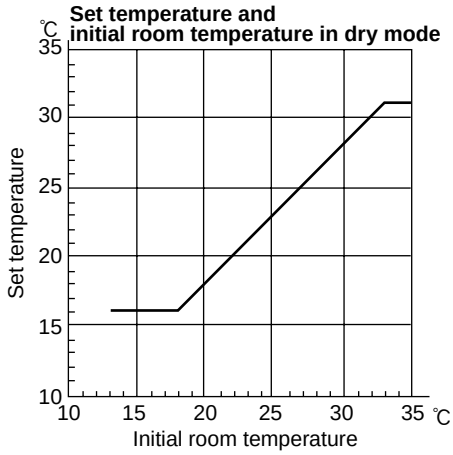

1. Thermostat control

Thermostat is ON or OFF by difference between room temperature and set temperature.

Initial temperature difference	Thermostat
Room temperature minus set temperature : 0.3 ℃ or more	ON
Room temperature minus set temperature : less than -0.3 ℃	OFF

Difference between room temperature and set temperature during operation

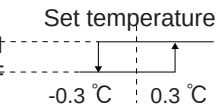

2. Indoor fan speed control

Indoor fan operates at the set speed by FAN SPEED CONTROL button.
In Auto fan speed becomes Low.

3. The operation of the compressor and indoor / outdoor fan <MU-A07/A09/A12WV, MUH-A07/A09/A12WV, MUX-A10/A19/A20/A22/A25/A26WV>

Compressor operates by room temperature control and time control.
Indoor fan and outdoor fan operate in the same cycle as the compressor.

● When the room temperature is 23°C or over:
When the thermostat is ON, the compressor repeats 8 minutes ON and 3 minutes OFF.
When the thermostat is OFF, the compressor repeats 4 minutes OFF and 1 minute ON.

● When the room temperature is under 23°C.
When the thermostat is ON, the compressor repeats 2 minutes ON and 3 minutes OFF.
When the thermostat is OFF, the compressor repeats 4 minutes OFF and 1 minute ON.

Operation time chart
Example

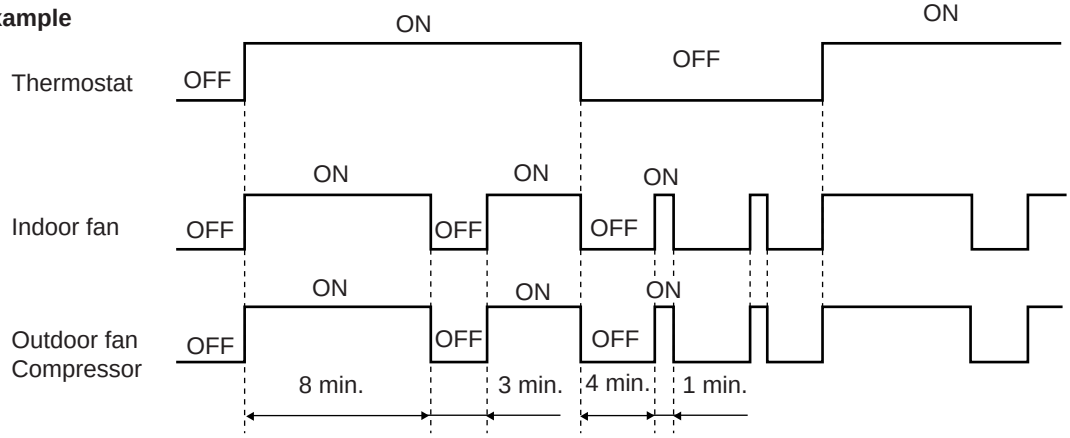

4. Coil frost prevention

The operation is as same as coil frost prevention during COOL operation.(Refer to a.3.)
However when coil frost prevention works while the indoor fan is OFF, its speed becomes set speed.

c. FAN (✤) OPERATION <MU-A07/A09/A12WV, MUX-A10/A19/A20/A22/A25/A26WV>

(1) Press OPERATE/STOP(ON/OFF) button. OPERATION INDICATOR lamp of the indoor unit turns on with a beep tone.
(2) Select FAN mode with the OPERATION SELECT button.
(3) Select the desired fan speed. When AUTO, it becomes Low.
Only indoor fan operates.
Outdoor unit does not operate.

d. HEAT (☼) OPERATION <MUH-A07/A09/A12WV, MXZ-A18/A26/A32WV>

(1) Press OPERATE/STOP(ON/OFF) button.
OPERATION INDICATOR lamp of the indoor unit turns on with a beep tone.
(2) Select HEAT mode with the OPERATION SELECT button.
(3) Press TEMPERATURE buttons (TOO WARM or TOO COOL button) to select the desired temperature.
The setting range is 16 ~ 31°C.

1. Thermostat control

Thermostat is ON or OFF by difference between room temperature and set temperature.

Initial temperature difference	Thermostat
Room temperature minus set temperature : less than -0.3 ℃	ON
Room temperature minus set temperature : 0.3 ℃ or more	OFF

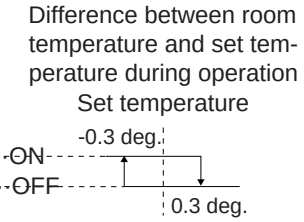

2. Indoor fan speed control

(1) Indoor fan operates at the set speed by FAN SPEED CONTROL button.
In Auto the fan speed is as follows.

Initial temperature difference	Fan speed
Set temperature minus room temperature: 1.7 degrees or more	High
Set temperature minus room temperature: Between 1 and 1.7 degrees	Med.
Set temperature minus room temperature: less than 1 degree	Low

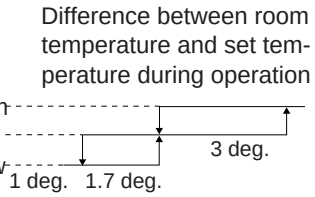

(2) Cold air prevention control
① When the compressor is not operating,
(Ⅰ) if the temperature of indoor coil thermistor RT12 is 0°C or less, the fan stops.
(Ⅱ) if the temperature of indoor coil thermistor RT12 is more than 0°C, the fan operates at Very Low.
② When the compressor is operating,
(Ⅰ) if the temperature of RT12 is 22°C or more, the fan operates at set speed.
(Ⅱ) if the temperature of RT12 is less than 22°C and
(ⅰ) if the temperature of room temperature thermistor RT11 is 15°C or less, the fan stops.
(ⅱ) if the temperature of room temperature thermistor RT11 is more than 15°C, the fan operates at Very Low.

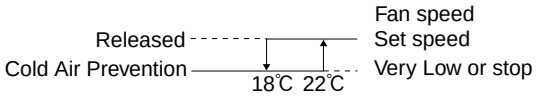

NOTE : If the temperature of RT12 reads from 18°C to 22°C at the air conditioner stating and also after defrosting, this control works.

(3) Warm air control.

When the following any condition of ① (a. ~ c.) and the condition of ② are satisfied at the same time, warm air control works.

① a.) When outdoor unit starts operating in HEAT mode.
b.) When cold air prevention has been released.
c.) When defrosting has been finished

② When the temperature of indoor coil thermistor RT12 is less than 37°C.

When warm air control works, the fan speed changes as follows to blow out warm air gradually.

Gradation of fan speed in initial

<Time condition>	<Indoor fan speed>
less than 2 minutes	Low
2 minutes to 4 minutes	Med.
more than 4 minutes	High

The upper limit of the fan speed in MANUAL is the set speed.
The upper limit of the fan speed in AUTO is the speed decided by indoor fan speed control.(Refer to d.2.(1).)
When the temperature of RT12 has been 37°C or more, or when the set speed has been changed, this control is released and the fan speed is the set speed.

3. High pressure protection <MUH-A07/A09/A12WV>

During heating operation, the outdoor fan motor is controlled by the temperature of indoor coil thermistor RT12 for excess rise protection of compressor discharge pressure.

Outdoor fan OFF: 52℃
Outdoor fan ON: 48℃

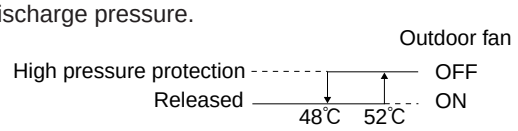

Operation chart
Example

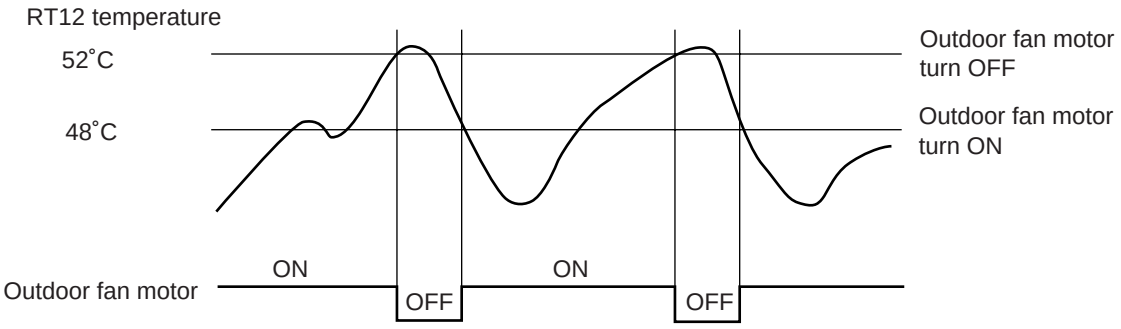

NOTE : During high pressure protection and for 4 min. and 15 sec. after high pressure protection, defrosting of outdoor heat exchanger is not detected by the defrost thermistor RT61.(Refer to d.4. Defrosting.)

4. Defrosting <MUH-A07/A09/A12WV>

Defrosting of outdoor heat exchanger is controlled by DEICER P.C. board, with detection by the defrost thermistor RT61.

(1) Starting conditions of defrost

When all conditions of a) ~ c) are satisfied, the defrosting operation starts.

a) The compressor cumulative operation time exceeds 40 minutes without the defrosting operation working.

b) RT61 reads - 3°C or less.

c) After releasing the high pressure protection 4 minutes and 15 seconds have elapsed.

(2) Releasing conditions of defrost

When the condition d) or e) is satisfied, the defrosting operation stops.

d) RT61 reads 3.1°C or more.

e) The defrosting time exceeds 10 minutes.

Operation time chart
Example

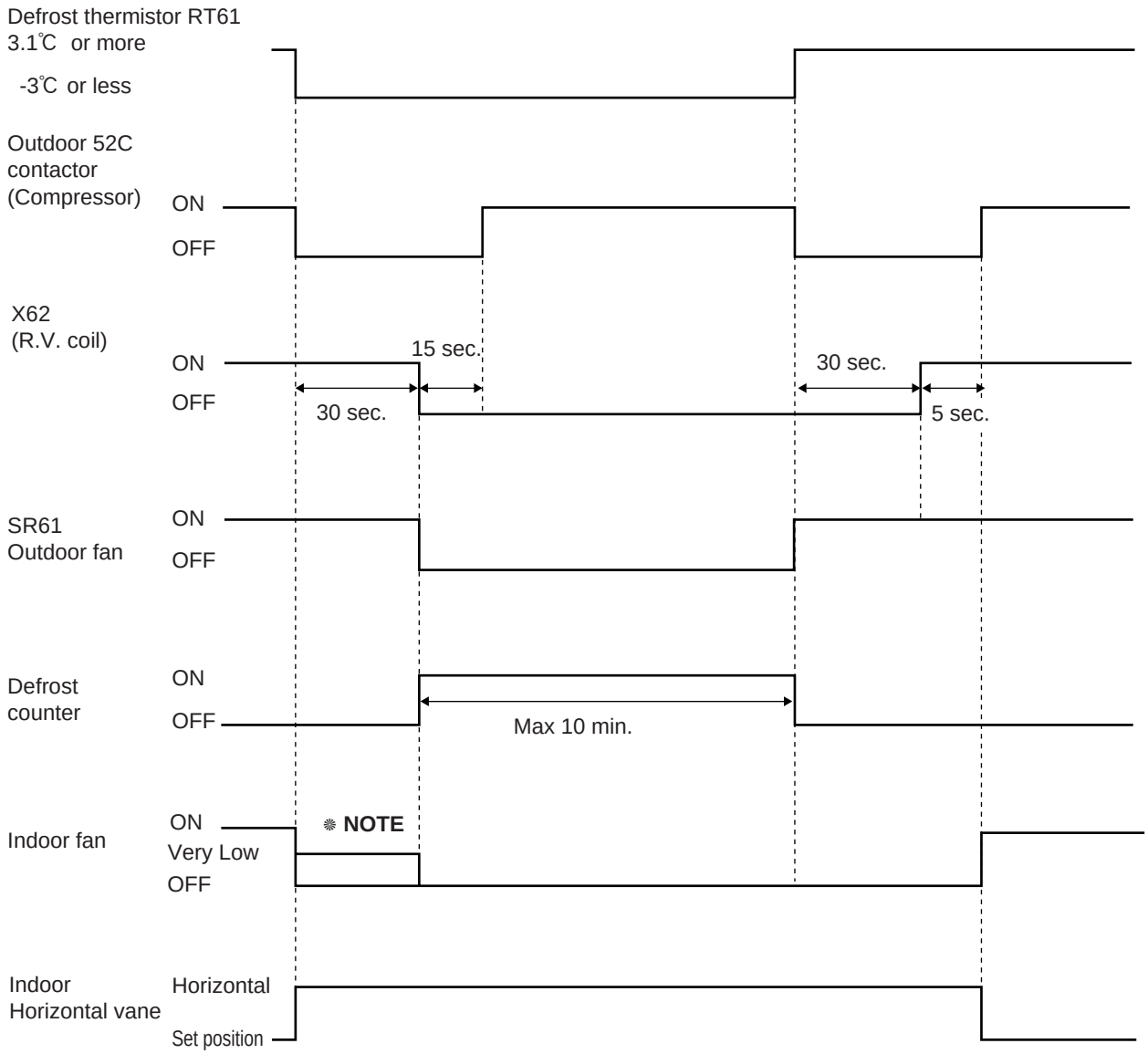

NOTE ● When the indoor coil thermistor RT12 reads above 0°C, indoor fan operates at Very Low for 30 seconds.
● When the indoor coil thermistor RT12 reads 0°C or less, the indoor fan stops.

5. R.V. coil control <MUH-A07/A09/A12WV>

Heating ····· ON
Cooling ····· OFF
Dry ····· OFF
When operation starts, the 4-way valve reverses for 5 seconds right before start-up of the compressor.

Operation time chart

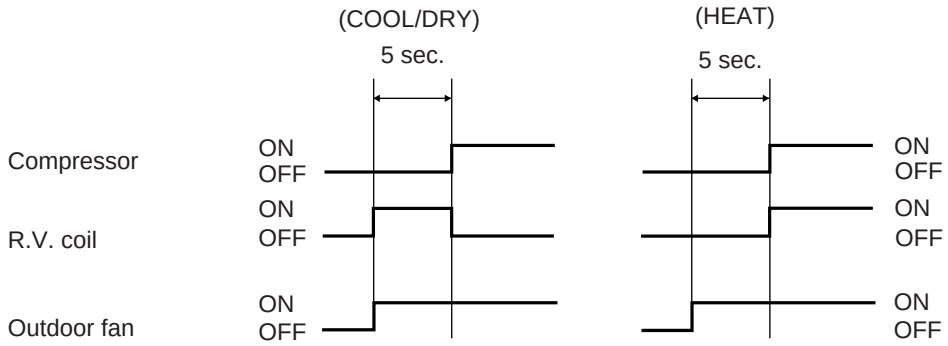

e. "I FEEL CONTROL" (▭) OPERATION

(1) Press OPERATE/STOP(ON/OFF) button.
OPERATION INDICATOR lamp of the indoor unit turns on with a beep tone.
(2) Select "I FEEL CONTROL"(▭) mode with the OPERATION SELECT button.
(3) The operation mode is determined by the initial room temperature at start-up of the operation, as shown on the right table.

Initial room temperature		Mode
MU&MUX type	**MUH & MXZ type**	
25℃ or more	25℃ or more	COOL mode of "I FEEL CONTROL"
more than13℃, less than 25℃	23℃ or more, less than 25℃	DRY mode of "I FEEL CONTROL"
———	less than 23℃	HEAT mode of "I FEEL CONTROL"

- Once the mode is fixed, the mode does not change by room temperature afterwards.
- Under the ON-TIMER (◷→|) operation, mode is determined according to the room temperature at set time the operation starts.
- When the system is stopped on the remote controller and restarted within 2 hours in "I FEEL CONTROL" (▭) mode, the system operates in previous mode automatically regardless of the room temperature.

Operation time chart

Example

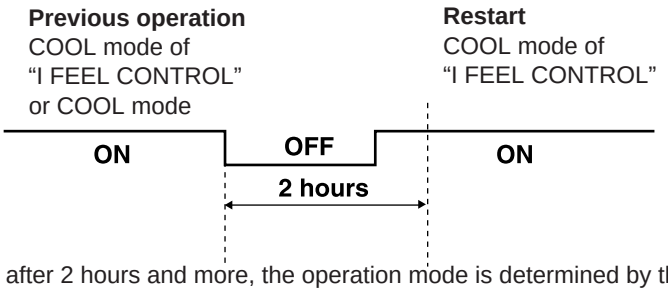

When the system is restarted after 2 hours and more, the operation mode is determined by the room temperature at start-up of the operation.

Operation time chart

Example

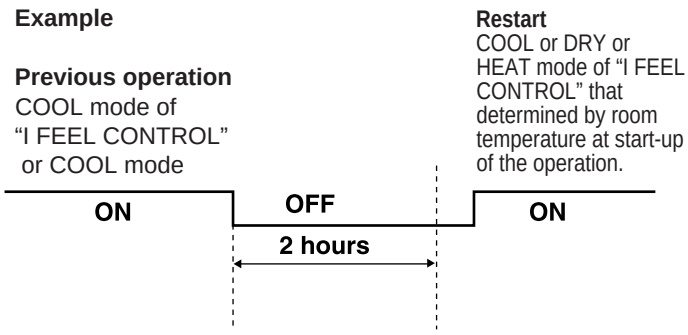

(4) The initial set temperature is decided by the initial room temperature.

Mode	Initial room temperature		Initial set temperature	
	MU & MUX type	**MUH & MXZ type**		
COOL mode of "I FEEL CONTROL"	26℃ or more	26℃ or more	24℃	※
	25℃ or more, less than 26℃	25℃ or more, less than 26℃	Initial room temperature minus 2℃	
DRY mode of "I FEEL CONTROL"	more than 13℃, less than 25℃	23℃ or more, less than25℃	Initial room temperature minus 2℃	
HEAT mode of "I FEEL CONTROL"	———	less than 23℃	26℃	

※ When the system is restarted with the remote controller, the system operates with the previous set temperature regardless of the room temperature at restart.

(5) TEMPERATURES buttons

In "I FEEL CONTROL" ( ) mode, set temperature is decided by the microprocessor based on the room temperature. In addition, set temperature can be controlled by TOO WARM or TOO COOL buttons when you feel too cool or too warm. Each time the TOO WARM or TOO COOL button is pressed, the indoor unit receives the signal and emits a beep tone.

● **Fuzzy control**

When the TOO COOL or TOO WARM button is pressed, the microprocessor changes the set temperature, considering the room temperature, the frequency of pressing TOO COOL or TOO WARM button and the user's preference to heat or cool. So this is called "Fuzzy control", and works only in "I FEEL CONTROL" mode.
In DRY mode of "I FEEL CONTROL", the set temperature doesn't change.

TOO COOL ▲ … To raise the set temperature 1~2 degrees(°C)

TOO WARM ▼ … To lower the set temperature 1~2 degrees(°C)

e.1. COOL mode of "I FEEL CONTROL"

1. Thermostat control
Thermostat control is as same as COOL OPERATION.(a.1.)

2. Indoor fan speed control
Indoor fan speed control is as same as COOL OPERATION.(a.2.)

3. Coil frost prevention
Coil frost prevention is as same as COOL OPERATION.(a.3.)

e.2. DRY mode of "I FEEL CONTROL"

1. Thermostat control
Thermostat control is as same as DRY OPERATION.(b.1.)

2. Indoor fan speed control
Indoor fan speed control is as same as DRY OPERATION.(b.2.)

3. The operation of the compressor and indoor/outdoor fan
The operation of the compressor and indoor/outdoor fan is as same as DRY OPERATION.(b.3.)

4. Coil frost prevention
Coil frost prevention is as same as DRY OPERATION.(b.4.)

e.3. HEAT mode of "I FEEL CONTROL" <MUH-A07/A09/A12WV, MXZ-A18/A26/A32WV>

1. Thermostat control
Thermostat control is as same as HEAT OPERATION.(d.1.)

2. Indoor fan speed control
Indoor fan speed control is as same as HEAT OPERATION.(d.2.)

3. High pressure protection <MUH-A07/A09/A12WV>
High pressure protection is as same as HEAT OPERATION.(d.3.)

4. Defrosting <MUH-A07/A09/A12WV>
Defrosting is as same as HEAT OPERATION.(d.4.)

5. R.V. coil control <MUH-A07/A09/A12WV>
R.V. coil control is as same as HEAT OPERATION.(d.5.)

f. FAN MOTOR CONTROL

(1) Rotational frequency feedback control

The indoor fan motor is equipped with a rotational frequency sensor, and outputs signal to the microprocessor to feedback the rotational frequency. Comparing the current rotational frequency with the target rotational frequency (High,Med.,Low), the microprocessor controls SR141 and adjusts fan motor electric current to make the current rotational frequency close to the target rotational frequency. With this control, when the fan speed is switched, the rotational frequency changes smoothly.

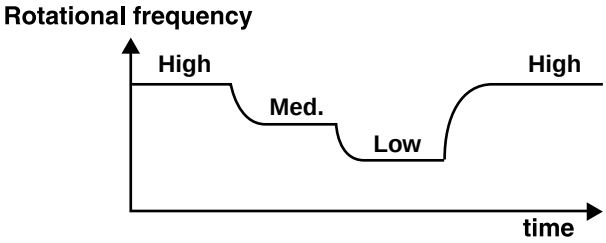

(2) Fan motor lock-up protection

When the rotational frequency feedback signal is not output for 12 seconds, (or when the microprocessor cannot detect the signal for 12 seconds) the fan motor is regarded locked-up. Then the electric current to the fan motor is shut off. 3 minutes later, the electric current is applied to the fan motor again. During the fan motor lock-up, the OPERATION INDICATOR lamp flashes on and off to show the fan motor abnormality.

g. AUTO VANE OPERATION

(1) Vane motor drive

These models are equipped with a stepping motor for the horizontal vane. The rotating direction, speed, and angle of the motor are controlled by pulse signals (approx. 12V) transmitted from indoor microprocessor.

(2) The horizontal vane angle and mode changes as follows by pressing the VANE CONTROL button.

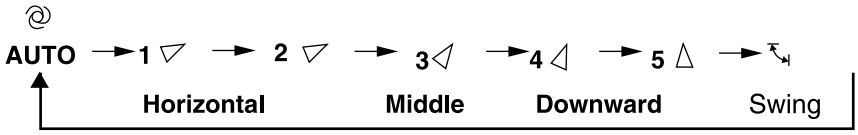

(3) Positioning

The vane is once pressed to the vane stopper below to confirm the standard position and then set to the desired angle. Confirming of standard position is performed in case of follows.

(a) When the OPERATE/STOP(ON/OFF) button is pressed.
(b) When the vane control is changed from AUTO to MANUAL.
(c) When the SWING is finished.
(d) When the test run starts.
(e) When the power supply turns ON.

(4) VANE AUTO ( ) mode

In VANE AUTO mode, the microprocessor automatically determines the vane angle to make the optimum room-temperature distribution.

① In COOL and DRY operation

② In FAN operation **<MU-A07/A09/A12WV MUX-A10/A19/A20/A22/ A25/A26WV>**

② In HEAT operation **<MUH-A07/A09/A12WV MXZ-A18/A26/A32WV>**

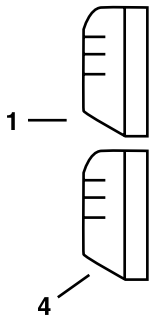

Vane angle is fixed to Angle 1.

Vane angle is fixed to Angle 4.

(5) Dew prevention

During COOL or DRY operation at Vane Angle 4 or 5 when the cumulative operation time of compressor exceeds 1 hour, the vane angle automatically changes to Angle 1 for dew prevention.

(6) SWING MODE ( )

By selecting SWING mode with the VANE CONTROL button, the horizontal vane swings vertically. The remote controller displays " ".

(7) Cold air prevention in HEAT operation **<MUH-A07/A09/A12WV, MXZ-A18/A26/A32WV>**

When any of the following conditions occurs in HEAT operation, the horizontal vane angle changes to Angle 1 automatically to prevent cold air blowing on users.

① Compressor is not operating.
② Defrosting is performed.
③ Indoor coil thermistor RT12 reads 24℃ or below.
④ Indoor coil thermistor RT12 temperature is raising from 24°C or below, but it does not exceed 28℃.

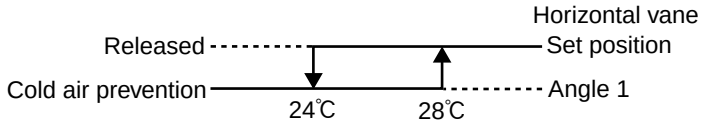

NOTE : If the temperature of RT12 reads from 24°C to 28°C at the air conditioner stating , this control works.

(8) ECONO COOL ( ) operation (ECONOmical operation)

When the ECONO COOL button is pressed in COOL mode, set temperature is automatically set 2°C higher than that in COOL mode.
Also the horizontal vane swings in various cycle according to the temperature of indoor heat exchanger(RT12).
SWING operation makes you feel cooler than set temperature. So, even though the set temperature is higher than that in COOL mode, the air conditioner can keep comfort. As a result, energy can be saved.
ECONO COOL operation is cancelled when the ECONO COOL button is pressed once again or VANE CONTROL button is pressed or operation mode is changed.

NOTE : ECONO COOL operation does not work in COOL mode of “I FEEL CONTROL”.

SWING operation

In swing operation of ECONO COOL operation mode, the initial air flow direction is adjusted to “Horizontal”.
According to the temperature of indoor coil thermistor RT12 at starting of this operation, next downward blow time is decided. Then when the downward blow has been finished, next upward blow time is decided.
For initial 10 min. the swing operation is performed in table G~H for quick cooling.
Also, after 10 min. when the difference of set temperature and room temperature is more than 2 degrees, the swing operation is performed in table D~H for more cooling.
The air conditioner repeats the swing operation in various cycle as follows.

	Temperature of indoor coil thermistor RT12	Downward blow time (sec.)	Horizontal blow time (sec.)
A	15°C or less	2	23
B	15°C to 17°C	5	20
C	17°C to 18°C	8	17
D	18°C to 20°C	11	14
E	20°C to 21°C	14	11
F	21°C to 22°C	17	8
G	22°C to 24°C	20	5
H	more than 24°C	23	2

h. TIMER OPERATION

1. How to set the timer

(1) Press OPERATE/STOP(ON/OFF) button to start the air conditioner.
(2) Check that the current time is set correctly.

NOTE : Timer operation will not work without setting the current time. Initially “AM0:00” blinks at the current time display of TIME MONITOR, so set the current time correctly with CLOCK SET button.

(3) Press ON or OFF TIMER buttons to select the operation.

“ ” button... AUTO START operation (ON timer)
“ ” button... AUTO STOP operation (OFF timer)

(4) Press HR. and MIN. button to set the timer. Time setting is 10-minute units.
HR. and MIN. button will work when " ◷→| " or " ◷→○ " mark is flashing.
These marks disappear in 1 minute.
After setting the ON timer, check that OPERATION INDICATOR lamp of the indoor unit lights.

NOTE1 : Be sure to place the remote controller at the position where its signal can reach the air conditioner even during TIMER operation, or the set time may deviate within the range of about 10 minutes.

NOTE2 : Reset the timer in the following cases, or the set time may deviate and other malfunctions may occur.
- A power failure occurs.
- The circuit breaker functions.

2. Cancel

TIMER setting can be cancelled with the ON or OFF TIMER buttons. (" ◷→| " or " ◷→○ ")
To cancel the ON timer, press the " ◷→| " button.
To cancel the OFF timer, press the " ◷→○ " button.
TIMER is cancelled and the display of set time disappears.

PROGRAM TIMER

- The OFF timer and ON timer can be used in combination.
- " ↑ " and " ↓ " display shows the order of the OFF timer and ON timer operation.

(Example 1) The current time is 8:00 PM.
The unit turns off at 11:00 PM, and on at 6:00 AM.

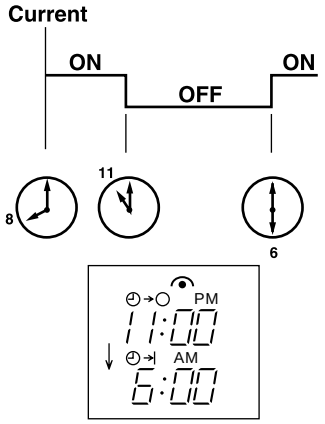

(Example 2) The current time is 11:00 AM.
The unit turns on at 5:00 PM, and off at 9:00 PM.

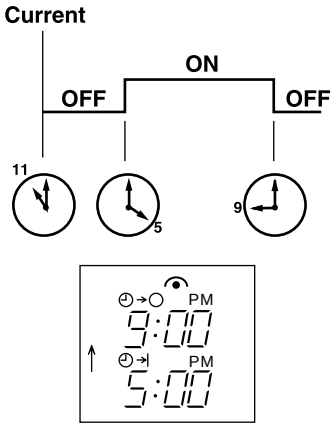

NOTE : TIMER setting will be cancelled by power failure or breaker functioning.

i. EMERGENCY-TEST OPERATION

In case of test run operation or emergency operation, use the EMERGENCY OPERATION switch on the front of the indoor unit. Emergency operation is available when the remote controller is missing, has failed or the batteries of remote controller run down. The unit will start and the OPERATION INDICATOR lamp will light.
The first 30 minutes of operation is the test run operation. This operation is for servicing. The indoor fan speed runs at High speed and the system is in continuous operation. (The thermostat is ON.)
After 30 minutes of test run operation the system shifts to EMERGENCY COOL [/HEAT <MUH-A07/A09/A12WV, MXZ-A18/A26/A32WV>] MODE with a set temperature of 24°C. The fan speed shifts to Med. speed.
The coil frost prevention works even in emergency operation [, and defrosting <MUH-A07/A09/A12WV, MXZ-A18/A26/A32WV> too].
In the test run or emergency operation, the horizontal vane operates in VANE AUTO (⊛) mode.
Emergency operation continues until the EMERGENCY OPERATION switch is pressed once again (MU-A07/A09/A12WV, MUX-A10/A19/A20/A22/A25/A26WV)/once or twice (MUH-A07/A09/A12WV, MXZ-A18/A26/A32WV) or the unit receives any signal from the remote controller. In case of latter normal operation will start.

NOTE : Do not press the EMERGENCY OPERATION switch during normal operation.

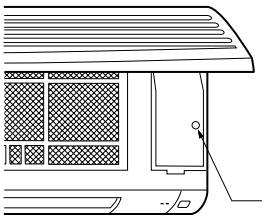

• The following indication does not depend on the shape of lamp.

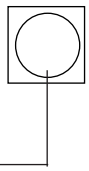

OPERATION INDICATOR lamp

Press once <Cool>	■	□
Press again <Heat>	□	■
Press once again <Stop>	□	□

※ Heat is available only in MUH-A07/A09/A12WV and MXZ-A18/A26/A32WV.

j. OUTDOOR UNIT ACTUATOR CONTROL

MUX-A10WV

ACTUATOR \ INDOOR UNIT			A	B
COMPRE-SSOR	MC	ON	ON	ON
			ON	OFF
			OFF	ON
		OFF	OFF	OFF
OUTDOOR FAN MOTOR	MF	ON	ANY UNIT ON	
		OFF	OFF	OFF
SOLENOID VALVE	21R (BALANCE)	ON (CLOSE)	ON	ON
			ON	OFF
			OFF	ON
		OFF (OPEN)	OFF	OFF
	21R1	ON (OPEN)	ON	–
		OFF (CLOSE)	OFF	–
	21R2	ON (OPEN)	–	ON
		OFF (CLOSE)	–	OFF

MUX-A20WV

ACTUATOR \ INDOOR UNIT			A	B	C
COMPRE-SSOR	MC1	ON	ON	–	–
		OFF	OFF	–	–
	MC2	ON	–	ON	ON
			–	ON	OFF
			–	OFF	ON
		OFF	–	OFF	OFF
OUTDOOR FAN MOTOR	MF61	ON	ANY UNIT ON		
		OFF	OFF	OFF	OFF
SOLENOID VALVE	21R3	ON (OPEN)	–	ON	–
		OFF (CLOSE)	–	OFF	–
	21R4	ON (OPEN)	–	–	ON
		OFF (CLOSE)	–	–	OFF
	21RB	ON (CLOSE)	–	ON	ON
			–	ON	OFF
			–	OFF	ON
		OFF (OPEN)	–	OFF	OFF

MUX-A19WV MUX-A25WV

ACTUATOR \ INDOOR UNIT			A	B
COMPRE-SSOR	MC1	ON	ON	–
		OFF	OFF	–
	MC2	ON	–	ON
		OFF	–	OFF
OUTDOOR FAN MOTOR	MF61	ON	ANY UNIT ON	
		OFF	OFF	OFF

MUX-A26WV

ACTUATOR \ INDOOR UNIT			A	B	C	D
COMPRE-SSOR	MC1	ON	ON	ON	–	–
			ON	OFF	–	–
			OFF	ON	–	–
		OFF	OFF	OFF	–	–
	MC2	ON	–	–	ON	ON
			–	–	ON	OFF
			–	–	OFF	ON
		OFF	–	–	OFF	OFF
OUTDOOR FAN MOTOR	MF61	ON	ANY UNIT ON			
		OFF	OFF	OFF	OFF	OFF
SOLENOID VALVE	21R1	ON (OPEN)	ON	–	–	–
		OFF (CLOSE)	OFF	–	–	–
	21R2	ON (OPEN)	–	ON	–	–
		OFF (CLOSE)	–	OFF	–	–
	21R3	ON (OPEN)	–	–	ON	–
		OFF (CLOSE)	–	–	OFF	–
	21R4	ON (OPEN)	–	–	–	ON
		OFF (CLOSE)	–	–	–	OFF
	21RA (BALANCE)	ON (CLOSE)	ON	ON	–	–
			ON	OFF	–	–
			OFF	ON	–	–
		OFF (OPEN)	OFF	OFF	–	–
	21RB (BALANCE)	ON (CLOSE)	–	–	ON	ON
			–	–	ON	OFF
			–	–	OFF	ON
		OFF (OPEN)	–	–	OFF	OFF

"–" means that the indoor unit is not related to the control of actuator.

MUX-A22WV

ACTUATOR \ INDOOR UNIT			A	B	C
COMPRESSOR	MC1	ON	ON	–	–
		OFF	OFF	–	–
	MC2	ON	–	ON	ON
			–	ON	OFF
			–	OFF	ON
		OFF	–	OFF	OFF
OUTDOOR FAN MOTOR	MF61	ON	ANY UNIT ON		
		OFF	OFF	OFF	OFF
SOLENOID VALVE	21R3	ON (OPEN)	–	ON	–
		OFF (CLOSE)	–	OFF	–
	21R4	ON (OPEN)	–	–	ON
		OFF (CLOSE)	–	–	OFF
	21RB	ON (CLOSE)	–	ON	ON
			–	ON	OFF
			–	OFF	ON
		OFF (OPEN)	–	OFF	OFF

"–" means that the indoor unit is not related to the control of actuator.

C.3.11.2 MXZ Series

[INVERTER MULTI SYSTEM CONTROL]

MXZ-A18WV

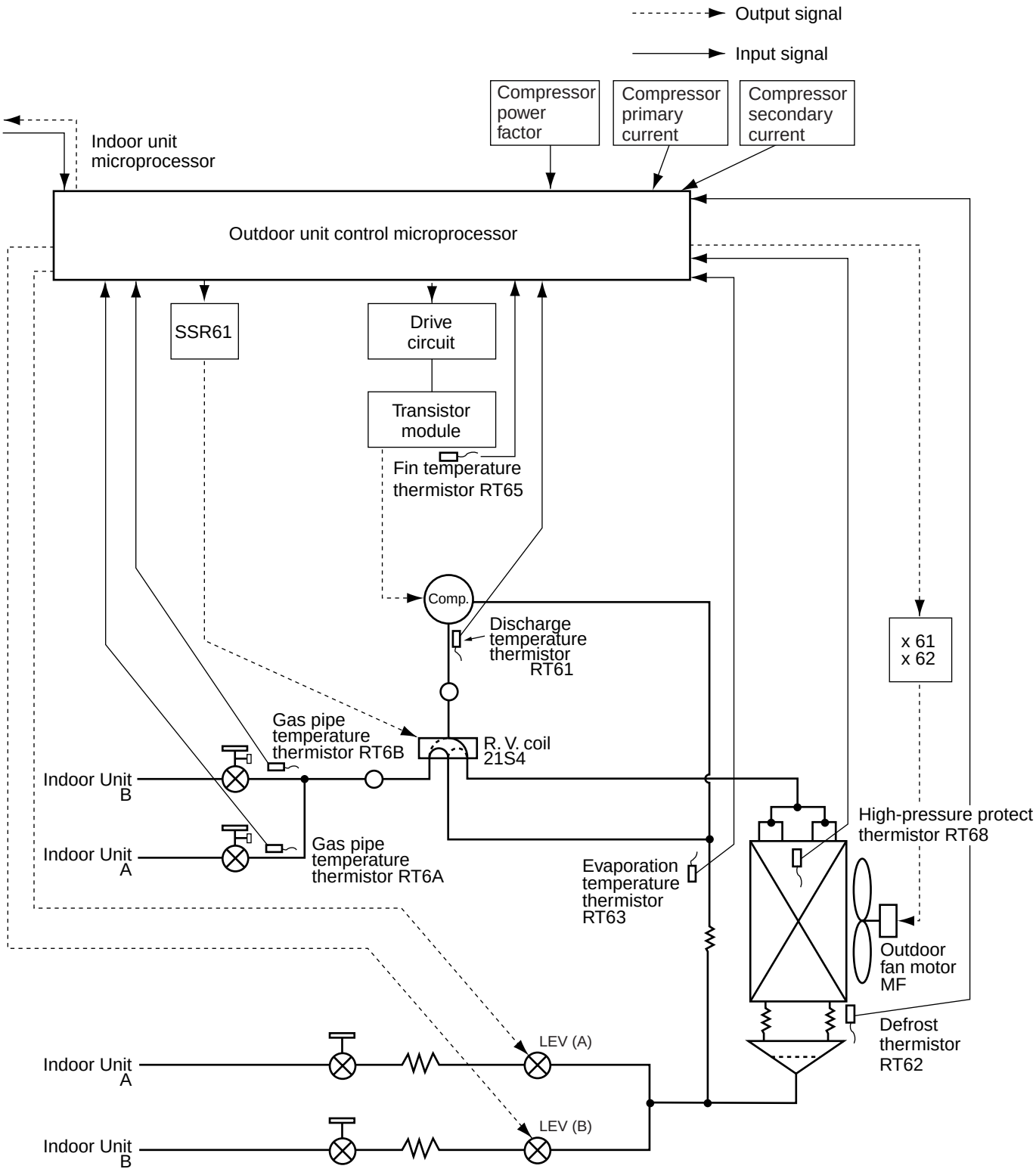

MXZ-A26WV

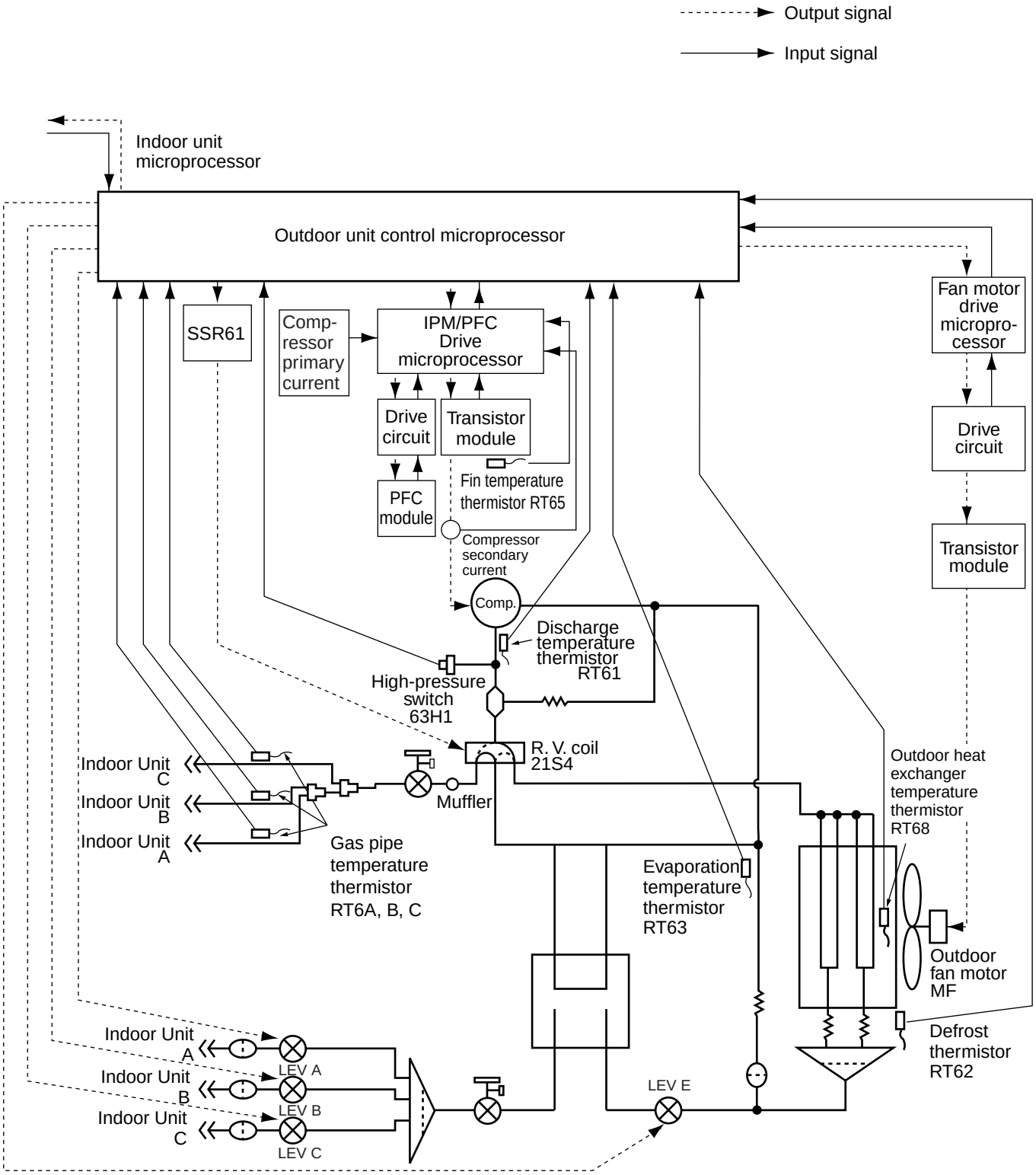
Output signal
Input signal
Indoor unit microprocessor
Outdoor unit control microprocessor
SSR61
Comp-ressor primary current
IPM/PFC Drive microprocessor
Drive circuit
Transistor module
PFC module
Fin temperature thermistor RT65
Compressor secondary current
Comp.
Discharge temperature thermistor RT61
High-pressure switch 63H1
R. V. coil 21S4
Muffler
Indoor Unit C
Indoor Unit B
Indoor Unit A
Gas pipe temperature thermistor RT6A, B, C
Evaporation temperature thermistor RT63
Outdoor heat exchanger temperature thermistor RT68
Outdoor fan motor MF
Defrost thermistor RT62
Fan motor drive micropro-cessor
Drive circuit
Transistor module
Indoor Unit A
Indoor Unit B
Indoor Unit C
LEV A
LEV B
LEV C
LEV E

MXZ-A32WV

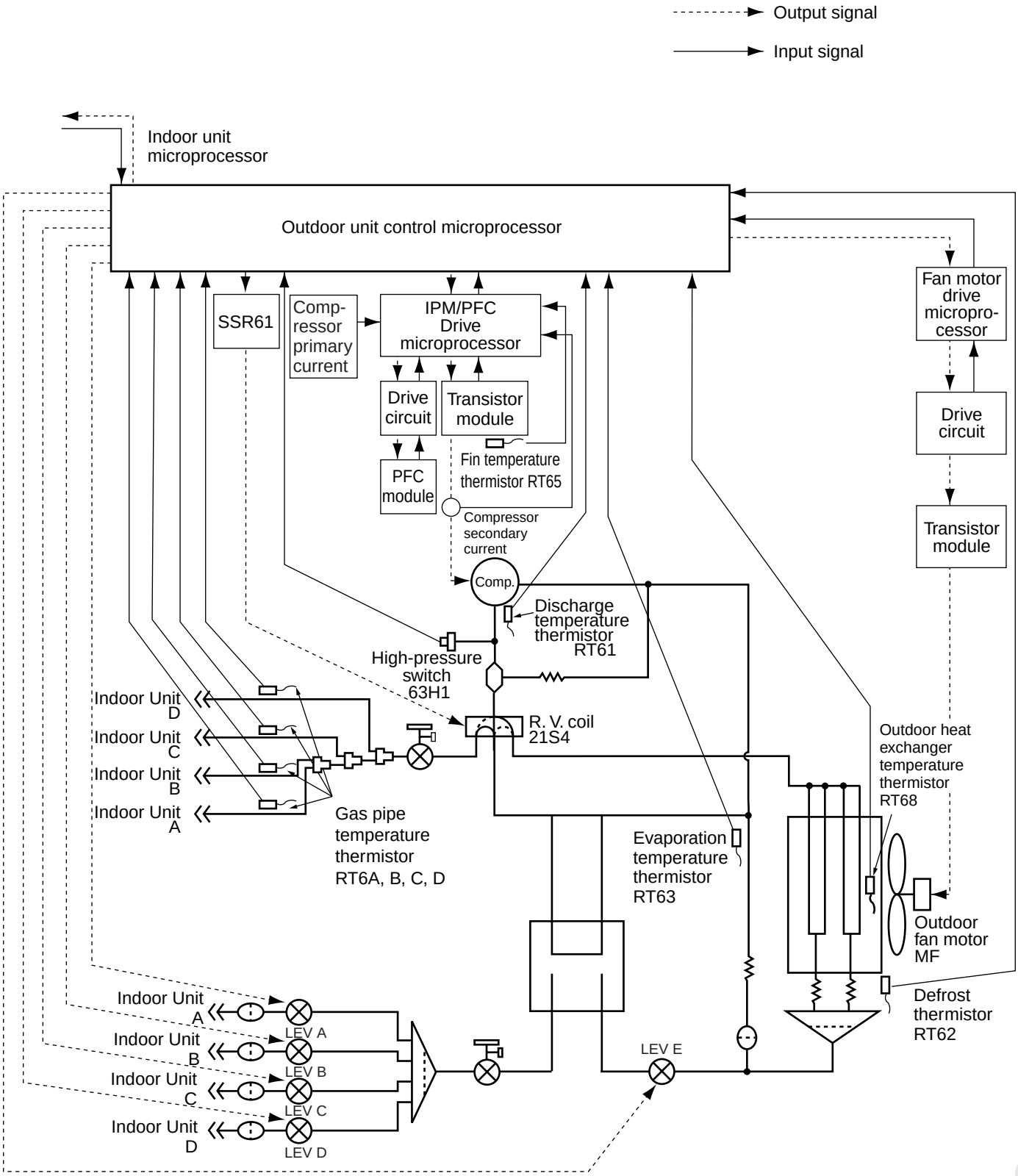
Output signal
Input signal
Indoor unit microprocessor
Outdoor unit control microprocessor
SSR61
Comp-ressor primary current
IPM/PFC Drive microprocessor
Drive circuit
Transistor module
PFC module
Fin temperature thermistor RT65
Compressor secondary current
Comp.
Discharge temperature thermistor RT61
High-pressure switch 63H1
R. V. coil 21S4
Fan motor drive micropro-cessor
Drive circuit
Transistor module
Outdoor heat exchanger temperature thermistor RT68
Outdoor fan motor MF
Defrost thermistor RT62
Evaporation temperature thermistor RT63
Gas pipe temperature thermistor RT6A, B, C, D
Indoor Unit D
Indoor Unit C
Indoor Unit B
Indoor Unit A
LEV A
LEV B
LEV C
LEV D
LEV E

MXZ-A18WV
MXZ-A26WV
MXZ-A32WV

a. INVERTER SYSTEM CONTROL

a.1. Inverter main power suplly circuit

MXZ-A18WV

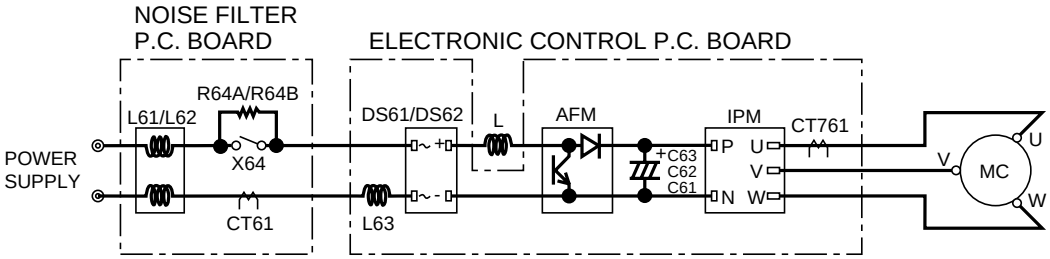

Function of main parts

MXZ-A18WV

SYMBOL	NAME	FUNCTION
C61, C62, C63	SMOOTHING CAPACITOR	It stabilizes the DC voltage.
CT61	CURRENT TRANSFORMER	It measures the current of main power supply circuit.
DS61, DS62	DIODE MODULE	It converts the AC voltage to DC voltage.
IPM	POWER TRANSISTOR MODULE	It supplies three-phase AC power to compressor.
L	REACTOR	It improves the power factor of power supply.
AFM	ACTIVE FILTER MODULE	
L61, L62	COMMON MODE CHOKE COIL	It eliminates and absorbs the electrical noise.
L63	NORMAL MODE CHOKE COIL	
R64A, R64B	CURRENT-LIMITING RESISTOR	It absorbs the rush current not to run into the main power supply circuit when the electricity is turned on.
X64	RELAY	It short-circuits the circuit to current-limiting resistor during the compressor operates.
CT761	CURRENT TRANSFORMER	It detects the power factor of the compressor motor.

a.2. Outline of main power supply circuit

MXZ-A18WV

1. At the start of operation

Rush current is generated in the instant the electricity is turned on to the main power supply circuit to operate the compressor. To prevent the rush current from running into the main power supply circuit, R64A and R64B (Current-limiting resistor) absorb the rush current.

After the rush current is absorbed, X64 (Relay) is ON and the circuit to R64A and R64B are short-circuited, then the electricity to R64A and R64B are bypassed.

When X64 is ON, the system starts the operation of compressor.

2. At normal operation

The noise of AC of power supply is eliminated by L61 and L62 (Common mode choke coil).

Then DS61 and DS62 (Diode module) perform full-wave rectification of AC and the AC is converted to DC.

C61, C62 and C63 (Smoothing capacitor) stabilize the power supply converted to DC from AC and supplies it to IPM (Power transistor module).

DC rectified by DS61 and DS62 are converted to three-phase AC by IPM.

Microcomputer installed in the electronic control P.C. board controls frequency and voltage of three-phase AC converted by IPM.

Three-phase AC is supplied from IPM to the compressor with frequency and voltage decided by microcomputer based on various kinds of information.

CT61 and CT761 (Current transformer) measure the current of main power supply circuit.

3. Power-factor improvement of power supply and harmonic control

Although C61, C62 and C63 [smoothing capacitor] are used in this inverter circuit in order to supply DC stably, since the charge current in capacitors turn into intermittent current in the stable circuit capacitor, power factor of power supply gets worse and harmonics ingredient also becomes large.

Therefere, AFM [active filter module] and L [reactor] have been arranged on DC circuit, and the improvement of power factor and generating of harmonics are controlled by bringing the intermittent current waveform of AC power supply close to sine wave synchronized with the power supply voltage waveform. (NOTE 1)

NOTE 1: When short-circuited between plus and minus pole of DC circuit, AC power supply current flows.
By controlling time of short-circuiting to flow proper amount of current in the intermittent portion of AC power supply current constantly, the current waveform of AC power supply is brought close to sine wave.

4. Removal of electric noise

Because of the noise filter circuit formed by L61 and L62 [*CMC COILS] and the capacitor on the noise filter board, the electric noise of the AC power supply supplied to the main power supply circuit is removed.
Moreover, common mode noise is absorbed with the above-mentioned noise filter, and the normal mode noise is absorbed in the noise filter circuit formed by L63 [*NMC COILS] and the capacitors [C650A, C650B, and C650C] on the control board so that the electric noise generated in the inverter circuit may not leak out.

*CMC COILS; Common mode choke coils
*NMC COILS; Normal mode choke coils

5. Power transistor module

IPM consists of the following components.

· Power Transistors (x6): Converts DC waveform to three-phase AC waveform and outputs it.
· Drive Circuit : Drives transistors.
· Protection circuit : Protects transistors from overcurrent.

Since the above components are all integrated in IPM, IPM has a merit that can get the control circuit simplified and miniaturized.

6. AFM [Active Filter Module]

The circuit that detects power supply voltage waveform, the circuit that detects the current flowing in module, the switching element that short-circuits between plus and minus pole of DC circuit, and the switching element driving current are built into AFM.
The current waveform is automatically adjusted by controlling the interval of short-circuit between plus and minus pole of DC circuit so that the waveform of actual current flowing to main power supply circuit is synchronized with the phase of power supply voltage waveform detected by AFM.

a.3. Iverter main power supply circuit

MXZ-A26WV MXZ-A32WV

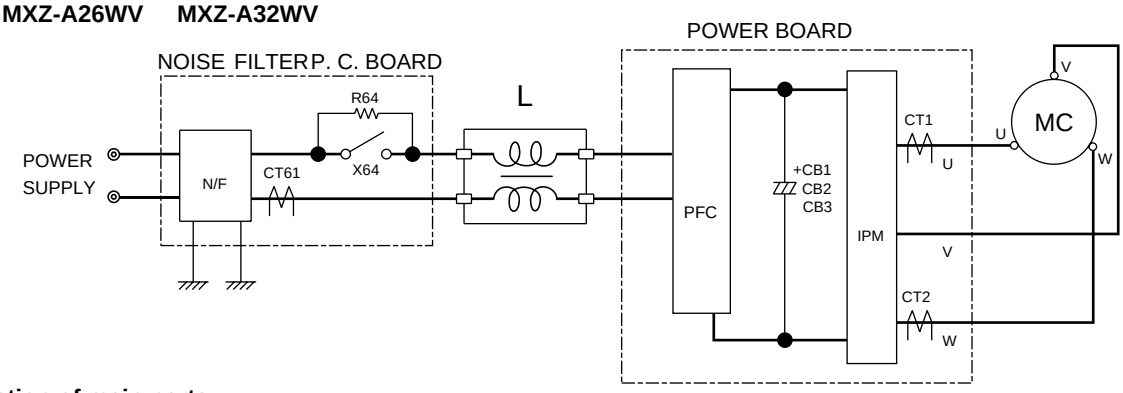

Function of main parts

MXZ-A26WV MXZ-A32WV

SYMBOL	NAME	FUNCTION
IPM	POWER TRANSISTOR MODULE	It supplies three-phase AC power to compressor.
CB1~3	SMOOTHING CAPACITOR	It stabilizes the DC voltage.
CT1~2	CURRENT TRANSFORMER	It measures the current of the compressor motor.
CT61	CURRENT TRANSFORMER	It measures the current of the main power supply circuit.
L	REACTOR	It rectifies AC, controls its voltage and improves the power factor of power supply.
PFC	POWER FACTOR CONTROLLER	
R64	CURRENT-LIMITING RESISTOR	It restricts rush current with the resistance.
X64	RELAY	It short-circuits the resistance which restricts rush current during the compressor operates.

a.4. Outline of main power supply circuit
MXZ-A26WV MXZ-A32WV

1. At the start of operation
Main power supply circuit is formed when X64 (Relay) is turned ON at compressor startup.
To prevent rush current from running into the circuit when power supply is turned ON, R64 (Current-limiting resistor) is placed in sub circuit.

2. At normal operation
① When AC runs into noise filter P.C. board, its external noise is eliminated in the noise filter circuit.
② After noise being eliminated from AC, it is rectified to DC by L (Reactor) and PFC (Power factor controller). If the operating frequency becomes 25Hz or more, DC voltage rises to 370V.
③ DC voltage, to which has AC been rectified by process ②, is stabilized by CB1~3 (Smoothing capacitor) and supplied to IPM (Power transistor module).
④ The DC (Bus voltage), which has been stabilized in process ③, is converted to three-phase AC by IPM and supplied to compressor.
⑤ CT1 and CT2 (Current Transformer), which are placed in the power supply circuit to compressor, are used to measure the value of phase current and locate the polar direction of rotor with algorithm. PWM (Pulse width modulation) controls impressed voltage and frequency with those information.

3. Power factor improvement
Booster coil L (Reactor) and PFC rectify AC to DC and control its voltage.
In the motor drive system of sine wave control, power factor can be improved by reducing harmonics PFC and L (Reactor) stabilize the voltage of DC supplied to inverter circuit and make its waveform smooth.

4. Power transistor module
IPM consists of the following components.
· Power Transistors (x6): Converts DC waveform to three-phase AC waveform and outputs it.
· Drive Circuit : Drives transistors.
· Protection circuit : Protects transistors from overcurrent.
Since the above components are all integrated in IPM, IPM has a merit that can get the control circuit simplified and miniaturized.

5. Smoothing capacitor
CB1, CB2 and CB3 stabilize the DC voltage and supply it to IPM.

6. Elimination of electrical noice
Noise filter circuit, which is formed by *CMC COILS and capacitors placed on the noise filter P.C. board, eliminates electrical noise of AC power that is supplied to main power supply circuit. In short, common mode noise is absorbed in this circuit. Moreover, normal mode noise is absorbed in another noise filter circuit which is formed by *NMC COILS and capacitors. Both noise filter circuit exists for preventing the electrical noise generated in the inverter circuit from leaking out.
*CMC COILS; Common mode choke coils
*NMC COILS; Normal mode choke coils

a.5. Optimal voltage control
MXZ-A18WV
The purpose of optimal voltage control is to operate the compressor at optimal voltage that meets the load detected by the power factor of the compressor.

1. Optimal
As shown on the right the efficiency (ratio of output against input) of the motor in the compressor becomes optimal when the sliding (ratio of difference between the actual number of rotation and the number of synchronous rotation of motor) is one fixed value. The value of sliding can be calculated from the power factor since the sliding and the power factor are mutually related as shown in the table on the right. To make the value of sliding so that the efficiency of motor is optimal, the power factor of the compressor is detected. Then the detected power factor is controlled so that its efficiency can be high. As a result, it is possible to operate the compressor at optimal voltage.

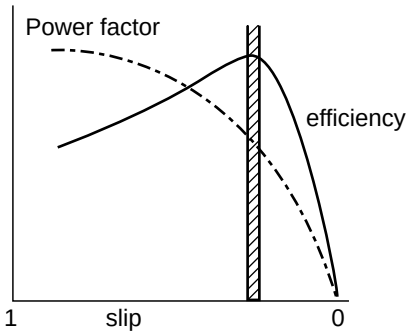

2. How to determine the optimal voltage
Compare the detected power factor with the target power factor so that the efficiency of motor is optimal, the voltage correction value is changed and the optimal output voltage is determined.
Optimal output voltage[V]= Standard voltage at certain frequency [V]x voltage correction value(%)

Target power factor minus detected power factor (Calculated value is supposed to be "A".)	Calculation of voltage correction value (%)
A≦-2%	Previous voltage correction value minus 1
-2%<A<+2%	Same as previous voltage correction value
A≧+2%	Previous voltage correction value plus 1

a.6. Sine wave control

MXZ-A26WV MXZ-A32WV

In these air conditioners, compressor equips brushless DC motor which doesn't have Hall element.
In short, the motor is sensorless. However, it's necessary to locate the polar direction of rotor in order to drive brushless DC motor efficiently. The general detection method of the polar direction for such a DC motor is to locate it from the voltage induced by unenergized stator.
Therefore, it is necessary to have a certain period of time in which the stator is being unenergized for the rotor position detection when the voltage of supplied power is impressed.
So the motor has been driven by square wave control (the conventional motor drive system) which energizes the motor only when the range of electrical angle is within 120° because it is forced to be unenergized within 30° at start & end of one heap in one waveform cycle (180°) when the voltage is impressed.
However, torque pulsation occurs at rotation in this method when the current-carrying phases are switched over to other phases in sequence. Therefore, sine wave control system is adopted for these air conditioners because it can make the phase-to-phase current waveform smoother (sine wave) in order to drive the motor more efficiently and smoothly.

a.7. Characteristics of sine wave control in case of brushless DC motor

MXZ-A26WV MXZ-A32WV

- Although ordinary three-phase induction motor requires energy to excite the magnetic field of rotor, brushless DC motor doesn't need it. So, higher efficiency and torque are provided.
- This control provides the most efficient waveform corresponding to the rotation times of compressor motor.
- The rotation can be set to higher compared to the conventional motor drive system. So, the time in which air conditioner can be operated with energy saved is longer than conventional models. This can save annual electric consumption.
- Compared to square wave control, the torque pulsation is reduced at rotation so that the motor operates more quietly.
- Since response and efficiency are enhanced in sine wave control, finer adjustment can be provided.

	DC Motor	AC Motor
Rotor	Permanent magnet is embedded.	Excited by magnetic field of stator.
Rotor Position Signal	Necessary	Unnecessary

※ In brushless DC motor, permanent magnet is embedded in the rotor. Therefore, it doesn't require energy to excite the rotor like AC motor does. However, it's necessary to control the frequency of three-phase AC current supplied to the stator according to the polar direction of magnet embedded in the rotor so as to drive the motor efficiently. Controlling three-phase AC current frequency also means controlling the timing to switch the polarity of stator. Therefore, the polar direction of rotor needs to be detected.

a.8. Control Method of Rotation Times

MXZ-A26WV MXZ-A32WV

Sine wave control makes the current transformers conduct real time detection of the value of the current running into the motor, locates the rotor position from the detected value and decides if voltage should be impressed and if frequency should be changed.
Compared to the conventional control and rotor position detection method, sine wave control can provide finer adjustment of the voltage of supplied power. The value of the current running into the motor is determined by each motor characteristic.

b.EXPANSION VALVE CONTROL (LEV CONTROL)

MXZ-A26WV MXZ-A32WV

The table below shows the role of Exclusive LEV and Receiver LEV in each operation mode.

		Circulation Amount Control	Capacity Distribution	Discharge Temperature Protection	High Pressure Protection	※Evaporation Temperature Protection
COOL	Exclusive LEV	○	○	○	○	○
	Receiver LEV	×	×	○	○	○
HEAT	Exclusive LEV	×	○	○	○	—
	Receiver LEV	○	×	○	○	—

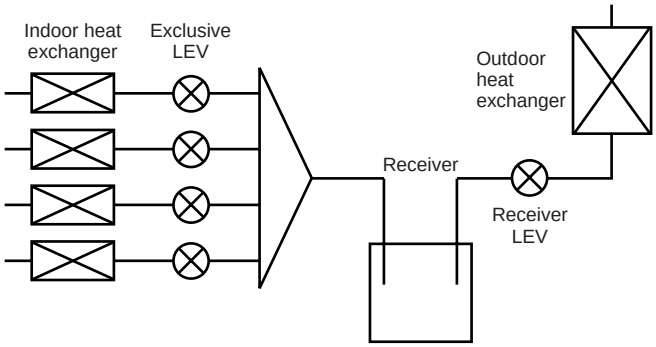

※In COOL mode, the two indoor coil thermistor (one main and one sub) sense temperature ununiformity (super heat) at the heat exchanger, and when temperature difference have developed, the indoor coil thermistors adjust LEV opening to diminish the super heat.
This action is called Evaporation Temperature Protection.

The opening pulse of the Receiver LEV is fixed to the standard No.3 in cooling operation, and so is that of each Exclusive LEV in heating operation.
However the opening pulse will be changed to the standard No.4 or No.5 when the discharge temperature protection or high-pressure protection is working.
In addition to that, it will also be changed to standard No.2 or No.1 when the opening pulse of the each Exclusive LEV becomes 100 pulse or less in cooling operation or so does that of Receiver LEV in heating operation.

Number of operating indoor units / Standard No.	LEV opening (pulse)							
	COOL				HEAT			
	1 unit	2 units	3 units	4 units	1 unit	2 units	3 units	4 units
1	150	250	250	250	250	250	250	240
2	250	320	320	320	300	300	300	290
3	350	360	370	380	450	380	380	380
4	400	410	420	430	460	400	390	390
5	450	460	470	480	470	450	440	430

MXZ-A18WV MXZ-A26WV MXZ-A32WV

Linear expansion valve (LEV) is controlled by "Thermostat ON" commands given from each unit.

Indoor unit status	LEV opening
Stop of all indoor unit	Opening before stop → 500 pulse in 15 minutes
When outdoor unit is operating, some indoor units stop and some operate.	COOL : 5 pulse (full closed) HEAT : 59 pulse (slightly opened)
Thermostat OFF in COOL or DRY mode	When the outdoor unit operates (When the other indoor unit operates): 5 pulse. When outdoor unit stops. (When the other indoor unit stops or thermo off): Maintain LEV opening before stop → 500 pulse in 15 minutes
Thermostat ON in COOL or DRY mode	• LEV opening for each indoor unit is determined by adding adjustment in accordance with the number of operating unit and the capacity class to standard opening, based on the operation frequency: Ex.) Opening 130 pulse in standard opening 1 → Minimum 80 pulse, Maximum 205 pulse. (Capacity code 4 at 1 unit operation) (Capacity code 1 at 4 units operation) • After starting operation, adjustment in accordance with intake super heat, discharge temperature is included in standard opening. ※1 Note: LEV opening in each frequency at DRY operation and COOL operation is the same. However, velocity and compressor operation frequency controls are different. See **c. OPERATIONAL FREQUENCY RANGE** (As far as the indoor unit velocity control goes, refer to DRY operation in MICROPROCESSOR CONTROL in indoor unit.)
Thermostat OFF in HEAT mode	• When the outdoor unit operates. (When the other indoor unit operates): 59 pulse • When the outdoor unit stops. (When the other indoor unit stops or thermo off): Maintain LEV opening before stop → 500 pulse in 15 minutes.
Thermostat ON in HEAT mode	• LEV opening for each indoor unit is determined by adding adjustment in accordance with the number of operating unit and the capacity class to standard opening, based on the operation frequency: Ex.) Opening 120 pulse in standard opening 1 → Minimum 70 pulse, Maximum 165 pulse. (Capacity code 4 at 1 unit operation) (Capacity code 1 at 4 units operation) • After starting operation, opening becomes the one that adjustment in accordance with discharge temperature was added to basic opening. ※1

※1 LEV opening when the outdoor unit is operating: Upper limit 500 pulse, Lower limit 59 pulse.

Determination of LEV standard opening in each indoor unit

- The standard opening is on the straight line, which connects an each standard point in the section where divided into seven according to the operation frequency of compressor as shown in the figure below.
  (LEV opening is controlled in proportion to the operation frequency.)

Note: Opening is adjusted at the standard opening according to the indoor unit conditions.
However, inclination of standard opening in each point of opening does not change with the original curve.

- Add opening provided in Difference in Capacity in the table below to the standard opening from 1 to 8, when capacity of the indoor unit is excluding code 1.
- Add opening provided in Difference in Operation number in the table below to determined LEV opening for each indoor unit, when 2, 3 or 4 indoor units are operated at the same time.

Note: Even when the adjusted standard opening exceeds the driving range from 59 to 500 pulse, actual driving output opening is in a range from 59 to 500 pulse.

< Calculation example of LEV opening >
Cool operation: Compressor frequency 70Hz: 2 units ON: 18 class
(170-150)p(80-60)o(70-60)+150+75-30=205 pulse

MXZ-A18WV

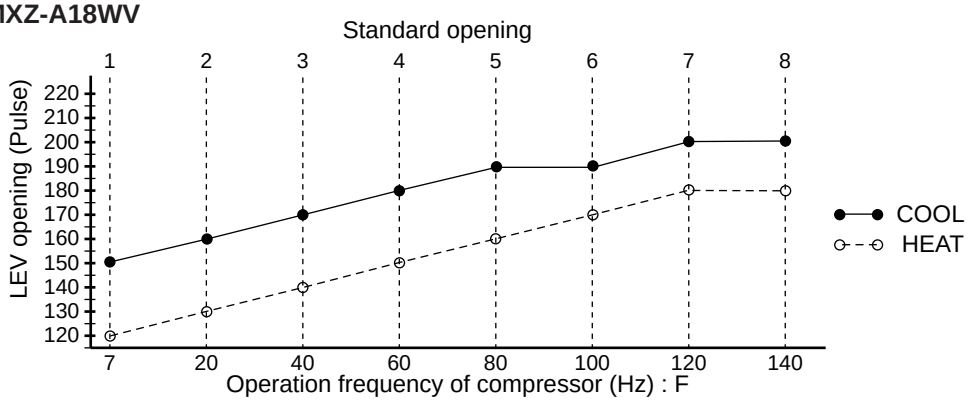

MXZ-A26WV MXZ-A32WV

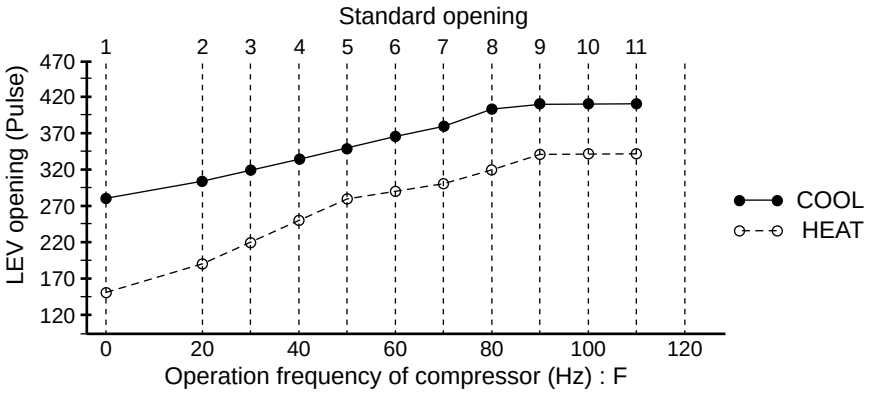

MXZ-A18WV

	Standard opening (pulse)								Difference in capacity		Difference in operation number
	1	2	3	4	5	6	7	8	Code2	Code3	2
COOL	200	210	220	230	240	240	250	250	25	50	-60
HEAT	160	170	180	190	200	210	210	220	20	40	-70

MXZ-A26WV MXZ-A32WV

	Standard opening (pulse)										
	0	20	30	40	50	60	70	80	90	100	110
COOL	280	305	320	335	350	365	380	405	410	410	410
HEAT	150	190	220	250	280	290	300	320	340	340	340

	Difference in capacity					Difference in operation number		
	Code2	Code5	Code6	Code7	Code8	2	3	4
COOL	5	150	150	170	175	-100	-110	-120
HEAT	5	30	70	70	80	0	0	0

MXZ-A18WV

Capacity code	1	2	3	4
Indoor unit	07	09	12	18

MXZ-A26WV MXZ-A32WV

Capacity code	1	2	3	4	5	6	7	8
Indoor unit	07	09	—	—	12	18	24	26

MXZ-A18WV MXZ-A26WV MXZ-A32WV

<Correction>

	COOL	DRY	HEAT
① Suction super heat (MIN gas pipe temperature thermistor - Evaporation temperature thermistor)	●	●	–
② Each correction ※ 1 • (Each gas pipe temperature thermistor - Evaporation temperature thermistor)			
③ Discharge temperature	●※ 2	●※ 2	●

※ 1 Perform this, when number of operation units is 2 units or more.
※ 2 When the correction opening of suction super heat is 0, correct the LEV opening by discharge temperature.

(1) LEV opening correction by suction super heat (COOL, DRY)
(Suction super heat) = (Minimum gas pipe temperature) - (Evaporation temperature)
When COOL and DRY, correct the LEV openings corrected from the table below.

MXZ-A18WV

Suction superheat (S.H.)	LEV opening correction (pulse)
more than 12	7
10 to 12	5
8 to 10	4
6 to 8	3
6 or less	0

MXZ-A26WV MXZ-A32WV

Suction superheat (S.H.)	LEV opening correction (pulse)
more than 8	15
6 to 8	8
4 to 6	6
2 to 4	4
2 or less	0

(2) Separate correction (COOL,DRY)
(When number of operation unit is 2 units)
Correction by the separate super heat
Correct the LEV separately by temperature difference between each gas pipe temperature thermistor and evaporator temperature thermistor.
① Calculate each super heat of the unit from the expression below;
(Super heat) = (Each gas pipe temperature) - (Minimum gas pipe temperature)
② Separate correction is performed according to each super heat in the table below.

MXZ-A18WV

Superheat	LEV opening correction (pulse)
more than 9	10
6 to 9	8
3 to 6	4
3 or less	0

MXZ-A26WV MXZ-A32WV

Superheat	LEV opening correction (pulse)
more than 9	12
6 to 9	8
3 to 6	4
3 or less	0

(3) LEV opening correction by discharge temperature
When LEV correction output is 0 pulse by the suction super heat at COOL or DRY operation, or HEAT operating, correct LEV is corrected according to the following table.
The target discharge temperature is determined according to frequency zone and number of operation unit of the compressor.

MXZ-A18WV

Operation frequency of compressor	LEV opening correction (pulse)			
	COOL, DRY		HEAT	
	Number of operating unit		Number of operating unit	
	1 unit	2 units	1 unit	2 units
Minimum ~ 20	40	40	45	45
21 ~ 33	40	40	50	50
34 ~ 46	45	45	55	55
47 ~ 59	52	52	60	60
60 ~ 72	62	62	65	65
73 ~ 85	67	67	70	70
86 ~ 98	72	72	70	70
97 ~ 111	75	75	75	75
111 ~ Maximum	80	80	76	76

MXZ-A26WV MXZ-A32WV

Operation frequency of compressor	LEV opening correction (pulse)							
	COOL				HEAT			
	Number of operating unit				Number of operating unit			
	1 unit	2 units	3 units	4 units	1 unit	2 units	3 units	4 units
Minimum ~ 20	55	55	57	59	58	58	50	50
21 ~ 30	55	58	62	64	62	62	50	50
31 ~ 40	60	60	65	67	68	66	55	55
41 ~ 50	60	65	70	70	72	70	60	60
51 ~ 65	65	65	70	70	78	74	65	65
66 ~ 80	70	70	70	70	78	78	70	70
81 ~ 95	70	70	72	72	78	78	74	74
96 ~ Maximum	70	70	72	72	78	78	76	76

Correct the LEV opening according to the difference between target discharge temperature and discharge temperature.

MXZ-A18WV

Discharge temperature (℃)	LEV opening correction (pulse)	
	COOL	HEAT
More than Target discharge temperature+11	10	8
Target discharge temperature+11 to Target discharge temperature+8	4	2
Target discharge temperature+8 to Target discharge temperature+5	2	1
Target discharge temperature+5 to Target discharge temperature+2	1	1
Target discharge temperature+2 to Target discharge temperature-2	0	0
Target discharge temperature-2 to Target discharge temperature-5	-1	-1
Target discharge temperature-5 to Target discharge temperature-8	-2	-1
Target discharge temperature-8 to Target discharge temperature-11	-5	-2
Target discharge temperature-11 or less	-8	-6

MXZ-A26WV MXZ-A32WV

Discharge temperature (℃)	LEV opening correction (pulse)	
	COOL	HEAT
More than Target discharge temperature+20	15	18
Target discharge temperature+20 to Target discharge temperature+12	4	10
Target discharge temperature+12 to Target discharge temperature+5	2	5
Target discharge temperature+5 to Target discharge temperature+3	1	2
Target discharge temperature+3 to Target discharge temperature-3	0	0
Target discharge temperature-3 to Target discharge temperature-5	-1	-2
Target discharge temperature-5 to Target discharge temperature-12	-3	-4
Target discharge temperature-12 to Target discharge temperature-20	-8	-8
Target discharge temperature-20 or less	-12	-15

c. OPERATIONAL FREQUENCY RANGE

MXZ-A18WV

Number of operating unit	capacity code	COOL (Hz)			DRY (Hz)	HEAT (Hz)			
		Min.	Max.	Rated		Min.	Max.	Defrost	Rated
1	1	25	76	55	27	25	100	120	72
	2		90	61	41		100	120	76
	3		100	85	53		122	120	88
2	2 3 4 5 6 7	40	120	110	72	43	122	120	120

MXZ-A26WV MXZ-A32WV

Number of operating unit	capacity code	COOL (Hz)			DRY (Hz)	HEAT (Hz)			
		Min.	Max.	Rated		Min.	Max.	Defrost	Rated
1	1	15	28	22	20	18	80	80	52
	2		29	23			80		52
	5		39	33			80		52
	6		44	41	24		80		64
	7		56	52			85		68
	8		68	63			90		72
2	2,3	24	52	39	32	35	90		64
	4,5		52	40			90		70
	6,7		61	52			92		80
	8~		70	65	38		94		82
3		40	85	73	46	39	94		72
4		47	94	80	48	52	94		70

Note: When the fan speed of indoor unit is totally Low notch, the maximum frequency is rated frequency.

d. HEAT DEFROSTING CONTROL

(1) Conditions to enter defrosting mode
1. When temperature of defrosting thermistor is -3°C or less.
2. When specified non-defrosting time, is counted in the control P.C. board is satisfied.
(Total time of compressor operating)
Going to defrosting mode at both condition of 1 and 2.

(2) Defrosting operation
1. Compressor stops for 50 seconds, Indoor fan is off, Defrosting lamp lights.
2. 4-way valve reverses flow, Compressor operates by the frequency in heat defrosting control.
3. After compressor stops for 35 seconds, 4-way valve reverses flow, then defrosting finishes.

(3) Conditions to finish defrosting mode
1. When the defrosting thermistor temperature is 13.2°C or more.
2. When it has spent 10 minutes for defrosting.
Defrosting finishes at condition of 1 or 2.

e. DISCHARGE TEMPERATURE PROTECTION CONTROL

This protection controls the compressor ON/OFF and operation frequency according to temperature of the discharge temperature thermistor.

(1) Compressor ON/OFF
When temperature of the discharge temperature thermistor exceeds 116°C, the control stops the compressor.
When temperature of the discharge temperature thermistor is 80°C or less, the controls starts the compressor.

(2) Compressor operation frequency
When temperature of the discharge temperature thermistor is expected to be higher than 116°C, the control decreases 12Hz from the current frequency.
When temperature of the discharge temperature thermistor is expected to be higher than 111°C and less than 116°C, the control decreases 6Hz from the current frequency.
When temperature of the discharge temperature thermistor is expected to be higher than 104°C and less than 111°C, the control is set at the current frequency.

f. REFRIGERANT RECOVERY CONTROL ON HEATING

<Control status>
The control performs when the all the following status are satisfied;
- When one or more indoor units are operating in HEAT mode. (Excluding thermostat OFF)
- When discharge temperature becomes 107°C or more.
- When it passed 60 minutes or more since the operation has started or the last refrigerant recovery has controlled.

<Control details>
LEV opening of indoor unit not operating is controlled to be 80 pulse.

<Control finish status>
The control finishes either as follows. However, the LEV opening is considered to be 59 pulse.
- When it passed 60 seconds since the control has started.
- When the discharge temperature is 90°C or less.

g. OUTDOOR FAN CONTROL

Fan speed is switched according to the number of operating indoor unit and the compressor frequency.

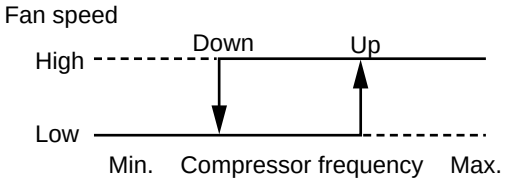

<Relation between compressor frequency and fan speed.>

MXZ-A18WV

Mode	Fan speed	Indoor unit operation	
		1 unit	2 units
COOL	Up	60Hz	60Hz
	Down	50Hz	50Hz
HEAT	Up	60Hz	60Hz
	Down	50Hz	50Hz

MXZ-A26WV MXZ-A32WV

Mode	Fan speed	Indoor unit operation		
		1 unit	2 units	3, 4 units
COOL	Up	45Hz	50Hz	55Hz
	Down	35Hz	40Hz	45Hz
HEAT	Up	50Hz	55Hz	60Hz
	Down	40Hz	45Hz	50Hz

Note
- When the indoor coil thermistor is 57°C or more on HEAT operation, fan speed is fixed to Low speed.
  Or, the indoor coil thermistor is 45°C or less on HEAT operation, fan speed is back to normal.

h. LOW OUTSIDE TEMPERATURE OPERATION

Unlike the usual fan control, the number of rotation is controlled to let the temperature of the outdoor heat exchanger become around 40°C when the unit is operating in COOL mode at low outside temperature.

<Details of Fan Control>

(a) The number of rotation will be increased when the temperature of the outdoor heat exchanger is high.
(b) The number of rotation will be decreased when the temperature of the outdoor heat exchanger is low.

The number of rotation will be lowered to around 100 rpm (rotation per minute) when just a few indoor units are operating or when the outside temperature is low.
When the number of rotation is lowered to around 100 rpm, the fan may stop by the influence of wind, but restarts 30 seconds later.

i.Relation between main sensor and actuator

MXZ-A18WV

Sensor	Purpose	Actuator			
		Compressor	LEV	Outdoor fan motor	Reversing valve
Discharge temperature thermistor	Protection	○	○		
Indoor pipe temperature thermistor	Defrosting Protection	○	○	○	
Defrost thermistor	Defrosting	○	○		○
Evaporation temperature thermistor	Control		○		
Gas pipe temperature thermistor	Control		○		
Fin temperature thermistor	Protection	○		○	
High-pressure protect thermistor	Protection	○			
Capacity code	Control	○	○	○	

MXZ-A26WV, A32WV

Sensor	Purpose	Actuator			
		Compressor	LEV	Outdoor fan motor	Reversing valve
Discharge temperature thermistor	Protection	○	○		
Indoor pipe temperature thermistor	Defrosting Protection	○	○	○	
Defrost thermistor	Defrosting	○	○	○	○
Evaporation temperature thermistor	Control		○		
Gas pipe temperature thermistor	Control		○		
Fin temperature thermistor	Protection	○		○	
Outdoor heat exchanger temperature	Protection	○	○	○	
Capacity code	Control	○	○		