MITSUBISHI ELECTRIC

Changes for the Better

for a greener tomorrow

AIR CONDITIONING SYSTEMS

CITY MULTI

DATA BOOK

MODEL

PUMY-P112-140VKM5 (-BS)

PUMY-P112-140YKM4 (-BS)

PUMY-P112-140YKME4 (-BS)

PUMY-P200YKM2 (-BS)

GENERAL LINE-UP

Line-up of Outdoor Units of R410A CITY MULTI

Heat Pump S Series

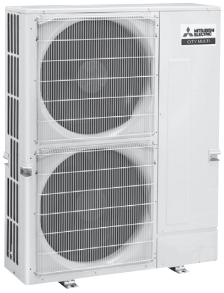

PUMY-P112VKM5(-BS)	PUMY-P112YKM(E)4(-BS)
PUMY-P125VKM5(-BS)	PUMY-P125YKM(E)4(-BS)
PUMY-P140VKM5(-BS)	PUMY-P140YKM(E)4(-BS)
	PUMY-P200YKM2(-BS)

4.5, 5, 6, 8HP

CONTENTS

PUMY-P-VKM5, PUMY-P-YKM(E)4, PUMY-P-YKM2

1. SPECIFICATIONS 2
2. EXTERNAL DIMENSIONS 6
3. CENTER OF GRAVITY 9
4. ELECTRICAL WIRING DIAGRAMS 11
5. SOUND LEVELS 15
6. OPERATION TEMPERATURE RANGE 17
7. CAPACITY TABLES 18
   - 7-1. Selection of Cooling/Heating Units 18
   - 7-2. Correction by temperature 24
   - 7-3. Correction by total indoor 28
   - 7-4. Correction by refrigerant piping length 30
   - 7-5. Correction at frost and defrost 31
8. OPTIONAL PARTS 32
   - 8-1. JOINT 32
   - 8-2. HEADER 33
   - 8-3. BRANCH BOX 34
9. ELECTRICAL WORK 35
   - 9-1. General cautions 35
   - 9-2. Power supply for Outdoor unit 36
   - 9-3. Power cable specifications 37
   - 9-4. Power supply examples 41
10. M-NET CONTROL 43
   - 10-1. Transmission cable length limitation 43
   - 10-2. Transmission cable specifications 45
   - 10-3. System configuration restrictions 46
   - 10-4. Address setting 50
11. PIPING DESIGN 60
   - 11-1. R410A Piping material 60
   - 11-2. Piping Design 61
   - 11-3. Refrigerant charging calculation 74
12. OUTDOOR INSTALLATION 75
   - 12-1. Requirement on installation site 75
   - 12-2. Spacing 77
   - 12-3. Piping direction 78

Model					PUMY-P112VKM5(-BS)	PUMY-P125VKM5(-BS)	PUMY-P140VKM5(-BS)
Power source					1-phase 220-230-240 V, 50 Hz; 1-phase 220-230 V, 60 Hz		
Cooling capacity (Nominal)		kW*1			12.5	14.0	15.5
		kcal/h*1			10,750	12,040	13,330
		Btu/h*1			42,650	47,768	52,886
	Power input	kW			2.79	3.46	4.52
	Current input	A			12.87-12.32-11.80, 12.87-12.32	15.97-15.27-14.64, 15.97-15.27	20.86-19.95-19.12, 20.86-19.95
	COP	kW/kW			4.48	4.05	3.43
Temp. range of cooling	Indoor temp.	W.B.			15 to 24°C		
	Outdoor temp.	D.B.			−5 to 52°C *3, *4		
Heating capacity (Nominal)		kW*2			14.0	16.0	18.0
		kcal/h*2			12,040	13,760	15,480
		Btu/h*2			47,768	54,592	61,416
	Power input	kW			3.04	3.74	4.47
	Current input	A			14.03-13.42-12.86,14.03-13.42	17.26-16.51-15.82,17.26-16.51	20.63-19.73-18.91,20.63-19.73
	COP	kW/kW			4.61	4.28	4.03
Temp. range of heating	Indoor temp.	D.B.			15 to 27°C		
	Outdoor temp.	W.B.			−20 to 15°C		
Indoor unit connectable	Total capacity				50 to 130% of outdoor unit capacity		
	Model/ Quantity	CITY MULTI			P10 - P140 / 9	P10 - P140 / 10	P10 - P140 / 12
		Branch box*6			P15 - P100 / 8	P15 - P100 / 8	P15 - P100 / 8
		Mixed system	Branch box 1unit*6	CITY MULTI	P15 - P140 / 5	P15 - P140 / 5	P15 - P140 / 5
				Branch box	P15 - P100 / 5	P15 - P100 / 5	P15 - P100 / 5
			Branch box 2unit*6	CITY MULTI	P15 - P140 / 3 or 2*5	P15 - P140 / 3	P15 - P140 / 3
				Branch box	P15 - P100 / 7 or 8*5	P15 - P100 / 8	P15 - P100 / 8
Sound pressure level (SPL) (measured in anechoic room)		dB <A>			49/51	50/52	51/53
Sound power level (PWL) (measured in anechoic room)		dB <A>			69/71	70/72	71/73
Refrigerant piping diameter	Liquid pipe	mm (inch)			9.52 (3/8)		
	Gas pipe	mm (inch)			15.88 (5/8)		
FAN *2	Type × Quantity				Propeller Fan x 2		
	Airflow rate	m³/min			110		
		L/s			1,833		
		cfm			3,884		
	Control, Driving mechanism				DC control		
	Motor output	kW			0.074+0.074		
	External static press.				0		
Compressor	Type × Quantity				Scroll hermetic compressor x 1		
	Manufacture				Mitsubishi Electric Corporation		
	Starting method				Inverter		
	Capacity control	%			Cooling 26 to 100 Heating 20 to 100	Cooling 24 to 100 Heating 18 to 100	Cooling 21 to 100 Heating 17 to 100
	Motor output	kW			2.9	3.5	3.9
	Case heater	kW			0		
	Lubricant				FV50S (2.3litter)		
External finish					Galvanized Steel Sheet Munsell No. 3Y 7.8/1.1		
External dimension H × W × D		mm			1,338×1,050×330(+40)		
		inch			52-11/16 × 41-11/32 × 13(+1-9/16)		
Protection devices	High pressure protection				High pressure Switch		
	Inverter circuit (COMP./FAN)				Overcurrent detection, Overheat detection(Heat sink thermistor)		
	Compressor				Compressor thermistor, Overcurrent detection		
	Fan motor				Overheating, Voltage protection, Overcurrent detection		
Refrigerant	Type × original charge				R410A 4.8 kg		
	Control				Linear expansion valve		
Net weight		kg (lb)			123 (271)		
Heat exchanger					Cross Fin and Copper tube		
HIC circuit (HIC: Heat Inter-Changer)					HIC circuit		
Defrosting method					Reversed refrigerant circuit		
Standard attachment	Document				Installation Manual		
	Accessory				Grounded lead wire ×1		
Optional parts					Joint: CMY-Y62-G-E, Header: CMY-Y64/68-G-E, Branch box: PAC-MK34/54BC		

Remarks

	*1 Nominal cooling conditions	*2 Nominal heating conditions
Indoor :	27°C D.B./19°C W.B. [81°F D.B/66°F W.B.]	20°C D.B. [68°F D.B.]
Outdoor :	35°C D.B. [95°F D.B.]	7°C DB/6°C W.B. [45°F D.B./43°F W.B.]
Pipe length :	7.5 m [24-9/16 ft]	7.5 m [24-9/16 ft]
Level difference :	0 m [0 ft]	0 m [0 ft]

*3 10 to 52°C D.B. [50 to 126°F D.B.], when connecting following models: PKFY-P10/15/20/25/32VLM, PFFY-P20/25/32VLEM, PFFY-P20/25/32VLRM(M), PFFY-P20/25/32VKM, PFFY-P20/25/32VCM, PEFY-P25/32/40VMA3; and M series, S series, and P series type indoor unit.

*4 −15 to 52°C D.B. [50 to 126°F D.B.], when using an optional air protect guide [PAC-SH95AG-E]. However, this condition does not apply to the indoor unit listed in *3.

*5 When connecting 7 indoor units via branch box, connectable CITY MULTI indoor units are 3; connecting 8 indoor units via branch box, connectable CITY MULTI indoor units are 2.

*6 At least two indoor unit must be connected when using branch box.

Notes : 1. Nominal conditions *1, *2 are subject to ISO 15042.

2. Due to continuing improvement, above specifications may be subject to change without notice.

Unit converter

kcal/h = kW × 860
Btu/h = kW × 3,412
cfm = m³/min × 35.31
lb = kg/0.4536

Above specification data is subject to rounding variation.

Model					PUMY-P112YKM4(-BS)	PUMY-P125YKM4(-BS)	PUMY-P140YKM4(-BS)
Power source					3-phase 380-400-415 V, 50 Hz; 3-phase 380 V, 60 Hz		
Cooling capacity (Nominal)		kW *1			12.5	14.0	15.5
		kcal/h *1			10,750	12,040	13,330
		Btu/h *1			42,650	47,768	52,886
	Power input	kW			2.79	3.46	4.52
	Current input	A			4.99-4.74-4.57, 4.99	5.84-5.55-5.35, 5.84	7.23-6.87-6.62, 7.23
	COP	kW/kW			4.48	4.05	3.43
Temp. range of cooling	Indoor temp.	W.B.			15 to 24°C		
	Outdoor temp.	D.B.			−5 to 52°C *3, *4		
Heating capacity (Nominal)		kW *2			14.0	16.0	18.0
		kcal/h *2			12,040	13,760	15,480
		Btu/h *2			47,768	54,592	61,416
	Power input	kW			3.04	3.74	4.47
	Current input	A			5.43-5.16-4.98, 5.43	6.31-6.00-5.78, 6.31	7.15-6.79-6.55, 7.15
	COP	kW/kW			4.61	4.28	4.03
Temp. range of heating	Indoor temp.	D.B.			15 to 27°C		
	Outdoor temp.	W.B.			−20 to 15°C		
Indoor unit connectable	Total capacity				50 to 130% of outdoor unit capacity		
	Model/ Quantity	CITY MULTI			P10 - P140 / 9	P10 - P140 / 10	P10 - P140 / 12
		Branch box*6			P15 - P100 / 8	P15 - P100 / 8	P15 - P100 / 8
		Mixed system	Branch box 1unit*6	CITY MULTI	P15 - P140 / 5	P15 - P140 / 5	P15 - P140 / 5
				Branch box	P15 - P100 / 5	P15 - P100 / 5	P15 - P100 / 5
			Branch box 2unit*6	CITY MULTI	P15 - P140 / 3 or 2*5	P15 - P140 / 3	P15 - P140 / 3
				Branch box	P15 - P100 / 7 or 8*5	P15 - P100 / 8	P15 - P100 / 8
Sound pressure level (SPL) (measured in anechoic room)		dB <A>			49/51	50/52	51/53
Sound power level (PWL) (measured in anechoic room)		dB <A>			69/71	70/72	71/73
Refrigerant piping diameter	Liquid pipe	mm (inch)			9.52 (3/8)		
	Gas pipe	mm (inch)			15.88 (5/8)		
FAN *2	Type × Quantity				Propeller Fan × 2		
	Airflow rate	m³/min			110		
		L/s			1,833		
		cfm			3,884		
	Control, Driving mechanism				DC control		
	Motor output	kW			0.074+0.074		
	External static press.				0		
Compressor	Type x Quantity				Scroll hermetic compressor × 1		
	Manufacture				Mitsubishi Electric Corporation		
	Starting method				Inverter		
	Capacity control	%			Cooling 26 to 100 Heating 20 to 100	Cooling 24 to100 Heating 18 to 100	Cooling 21 to 100 Heating 17 to 100
	Motor output	kW			2.9	3.5	3.9
	Case heater	kW			0		
	Lubricant				FV50S(2.3litter)		
External finish					Galvanized Steel Sheet Munsell No. 3Y 7.8/1.1		
External dimension H × W × D		mm			1338 × 1050 × 330(+40)		
		inch			52-11/16 × 41-11/32 × 13 (+1-9/16)		
Protection devices	High pressure protection				High pressure Switch		
	Inverter circuit (COMP./FAN)				Overcurrent detection, Overheat detection(Heat sink thermistor)		
	Compressor				Compressor thermistor, Over current detection		
	Fan motor				Overheating, Voltage protection, Over current detection		
Refrigerant	Type × original charge				R410A 4.8 kg		
	Control				Linear expansion valve		
Net weight		kg (lb)			125 (276)		
Heat exchanger					Cross Fin and Copper tube		
HIC circuit (HIC: Heat Inter-Changer)					HIC circuit		
Defrosting method					Reversed refrigerant circuit		
Drawing	External				BK01N339		
	Wiring				BH78B814		
Standard attachment	Document				Installation Manual		
	Accessory				Grounded lead wire x1		
Optional parts					Joint: CMY-Y62-G-E, Header: CMY-Y64/68-G-E, Branch box: PAC-MK34/54BC		

Remarks

	*1 Nominal cooling conditions	*2 Nominal heating conditions
Indoor:	27°C D.B./19°C W.B. [81°F D.B/66°F W.B.]	20°C D.B. [68°F D.B.]
Outdoor:	35°C D.B. [95°F D.B.]	7°C DB/6°C W.B. [45°F D.B./43°F W.B.]
Pipe length:	7.5 m [24-9/16 ft]	7.5 m [24-9/16 ft]
Level difference:	0 m [0 ft]	0 m [0 ft]

*3 10 to 52:D.B. [50 to 126_F D.B.], when connecting following models: PKFY-P10/15/20/25/32VLM, PFFY-P20/25/32VLEM, PFFY-P20/25/32VLRM(M), PFFY-P20/25/32VKM, PFFY-P20/25/32VCM, PEFY-P25/32/40VMA3; and M series, S series, and P series type indoor unit.

*4 −15 to 52:D.B. [50 to 126_F D.B.], when using an optional air protect guide [PAC-SH95AG-E]. However, this condition does not apply to the indoor unit listed in *3.

*5 When connecting 7 indoor units via branch box, connectable CITY MULTI indoor units are 3; connecting 8 indoor units via branch box, connectable CITY MULTI indoor units are 2.

*6 At least two indoor unit must be connected when using branch box.

Notes: 1. Nominal conditions *1, *2 are subject to ISO 15042.
2. Due to continuing improvement, above specifications may be subject to change without notice.

Unit converter

kcal/h = kW × 860
Btu/h = kW × 3,412
cfm = m³/min × 35.31
lb = kg/0.4536

Above specification data is subject to rounding variation.

Model					PUMY-P112YKME4(-BS)	PUMY-P125YKME4-BS	PUMY-P125YKME4-BS
Power source					3-phase 380-400-415 V, 50 Hz		
Cooling capacity (Nominal)		kW*1			12.5	14.0	15.5
		kcal/h*1			10,750	12,040	13,330
		Btu/h*1			42,650	47,768	52,886
	Power input	kW			2.79	3.46	4.52
	Current input	A			4.99-4.74-4.57	5.84-5.55-5.35	7.23-6.87-6.62
	COP	kW/kW			4.48	4.05	3.43
Temp. range of cooling	Indoor temp.	W.B.			15 to 24°C		
	Outdoor temp.	D.B.			−5 to 52°C *3, *4		
Heating capacity (Nominal)		kW*2			14.0	16.0	18.0
		kcal/h*2			12,040	13,760	15,480
		Btu/h*2			47,768	54,592	61,416
	Power input	kW			3.04	3.74	4.47
	Current input	A			5.43-5.16-4.98	6.31-6.00-5.78	7.15-6.79-6.55
	COP	kW/kW			4.61	4.28	4.03
Temp. range of heating	Indoor temp.	D.B.			15 to 27°C		
	Outdoor temp.	W.B.			−20 to 15°C		
Indoor unit connectable	Total capacity				50 to 130% of outdoor unit capacity		
	Model/ Quantity	CITY MULTI			P10 - P140 / 9	P10 - P140 / 10	P10 - P140 / 12
		Branch box*6			P15 - P100 / 8	P15 - P100 / 8	P15 - P100 / 8
		Mixed system	Branch box 1unit*6	CITY MULTI	P15 - P140 / 5	P15 - P140 / 5	P15 - P140 / 5
				Branch box	P15 - P100 / 5	P15 - P100 / 5	P15 - P100 / 5
			Branch box 2unit*6	CITY MULTI	P15 - P140 / 3 or 2*5	P15 - P140 / 3	P15 - P140 / 3
				Branch box	P15 - P100 / 7 or 8*5	P15 - P100 / 8	P15 - P100 / 8
Sound pressure level (SPL) (measured in anechoic room)		dB <A>			49/51	50/52	51/53
Sound power level (PWL) (measured in anechoic room)		dB <A>			69/71	70/72	71/73
Refrigerant piping diameter	Liquid pipe	mm (inch)			9.52 (3/8)		
	Gas pipe	mm (inch)			15.88 (5/8)		
FAN *2	Type × Quantity				Propeller Fan x 2		
	Airflow rate	m³/min			110		
		L/s			1,833		
		cfm			3,884		
	Control, Driving mechanism				DC control		
	Motor output	kW			0.074+0.074		
	External static press.				0		
Compressor	Type × Quantity				Scroll hermetic compressor x 1		
	Manufacture				Mitsubishi Electric Corporation		
	Starting method				Inverter		
	Capacity control	%			Cooling 26 to 100 Heating 20 to 100	Cooling 24 to 100 Heating 18 to 100	Cooling 21 to 100 Heating 17 to 100
	Motor output	kW			2.9	3.5	3.9
	Case heater	kW			0		
	Lubricant				FV50S (2.3litter)		
External finish					Galvanized Steel Sheet Munsell No. 3Y 7.8/1.1		
External dimension H × W × D		mm			1,338×1,050×330(+40)		
		inch			52-11/16 × 41-11/32 × 13(+1-9/16)		
Protection devices	High pressure protection				High pressure Switch		
	Inverter circuit (COMP./FAN)				Overcurrent detection, Overheat detection(Heat sink thermistor)		
	Compressor				Compressor thermistor, Overcurrent detection		
	Fan motor				Overheating, Voltage protection, Overcurrent detection		
Refrigerant	Type × original charge				R410A 4.8kg		
	Control				Linear expansion valve		
Net weight		kg (lb)			136 (300)		
Heat exchanger					Cross Fin and Copper tube		
HIC circuit (HIC: Heat Inter-Changer)					HIC circuit		
Defrosting method					Reversed refrigerant circuit		
Drawing	External				BK01N339		
	Wiring				BH78J358		
Standard attachment	Document				Installation Manual		
	Accessory				Grounded lead wire ×1		
Optional parts					Joint: CMY-Y62-G-E, Header: CMY-Y64/68-G-E, Branch box: PAC-MK34/54BC		

Remarks

	*1 Nominal cooling conditions	*2 Nominal heating conditions
Indoor:	27°C D.B./19°C W.B. [81°F D.B/66°F W.B.]	20°C D.B. [68°F D.B.]
Outdoor:	35°C D.B. [95°F D.B.]	7°C DB/6°C W.B. [45°F D.B./43°F W.B.]
Pipe length:	7.5 m [24-9/16 ft]	7.5 m [24-9/16 ft]
Level difference:	0 m [0 ft]	0 m [0 ft]

*3 10 to 52°C D.B. [50 to 126°F D.B.], when connecting following models: PKFY-P10/15/20/25/32VLM, PFFY-P20/25/32VLEM, PFFY-P20/25/32VLRM(M), PFFY-P20/25/32VKM, PFFY-P20/25/32VCM, PEFY-P25/32/40VMA3; and M series, S series, and P series type indoor unit.

*4 −15 to 52°C D.B. [50 to 126°F D.B.], when using an optional air protect guide [PAC-SH95AG-E]. However, this condition does not apply to the indoor unit listed in *3.

*5 When connecting 7 indoor units via branch box, connectable CITY MULTI indoor units are 3; connecting 8 indoor units via branch box, connectable CITY MULTI indoor units are 2.

*6 At least two indoor unit must be connected when using branch box.

Notes: 1. Nominal conditions *1, *2 are subject to ISO 15042.
2. Due to continuing improvement, above specifications may be subject to change without notice.

Unit converter

kcal/h = kW × 860
Btu/h = kW × 3,412
cfm = m³/min × 35.31
lb = kg/0.4536

Above specification data is subject to rounding variation.

Model				PUMY-P200YKM2, PUMY-P200YKM2-BS
Power source				3-phase 380-400-415 V, 50 Hz
Cooling capacity (Nominal)			kW *1	22.4
			kcal/h *1	19,300
			Btu/h *1	76,400
	Power input		kW	6.05
	Current input		A	9.88- 9.39- 9.05
	EER		kW/kW	3.70
Temp. range of cooling	Indoor temp.		W.B.	15 to 24°C
	Outdoor temp.		D.B.	−5 to 52°C *3,*4
Heating capacity (Nominal)			kW *2	25.0
			kcal/h *2	21,500
			Btu/h *2	85,300
	Power input		kW	5.84
	Current input		A	9.54- 9.06- 8.74
	COP		kW/kW	4.28
Temp. range of heating	Indoor temp.		D.B.	15 to 27°C
	Outdoor temp.		W.B.	−20 to 15°C *3,*4
Indoor unit connectable	Total capacity			50 to 130% of outdoor unit capacity
	Model/Quantity	CITY MULTI		P10–P200/12
		Branch box		kW type: P15–P100/8
		Mixed system: Branch box 1 unit	CITY MULTI	P10–P200/5
			Branch box	kW type: P15–P100/5
		Mixed system: Branch box 2 units	CITY MULTI	P10–P200/3
			Branch box	kW type: P15–P100/8
Sound pressure level (SPL) (measured in anechoic room)			dB <A>	56/61
Power pressure level (PWL) (measured in anechoic room)			dB <A>	75/80
Refrigerant piping diameter	Liquid pipe		mm (inch)	9.52 (3/8)*5
	Gas pipe		mm (inch)	19.05 (3/4)
FAN	Type × Quantity			Propeller Fan × 2
	Airflow rate		m³/min	139/141
			L/s	2,317/2,350
			cfm	4,909/4,979
	Control, Driving mechanism			DC control
	Motor output		kW	0.20 + 0.20
	External static pressure			0
Compressor	Type × Quantity			Scroll hermetic compressor × 1
	Manufacturer			Siam Compressor Industry Co., Ltd.
	Starting method			Inverter
	Capacity control		%	Cooling 25 to100 Heating 17 to 100
	Motor output		kW	5.3
	Case heater		kW	0
	Lubricant			FVC68D (2.3litter)
External finish				Galvanized Steel Sheet Munsell No. 3Y 7.8/1.1
External dimension HxWxD			mm	1,338×1,050×330(+40)
			inch	52-11/16 × 41-11/32 × 13(+1-10/16)
Protection devices	High pressure protection			High pressure Switch
	Inverter circuit (COMP./FAN)			Overcurrent detection, Overheat detection(Heat sink thermistor)
	Compressor			Compressor thermistor, Over current detection
	Fan motor			Overheating, Voltage protection
Refrigerant	Type × original charge			R410A 7.3 kg
	Control			Linear Expansion Valve
Net weight			kg (lb)	141 (311)
Heat exchanger				Cross Fin and Copper tube
HIC circuit (HIC: Heat Inter-Changer)				HIC circuit
Defrosting method				Reversed refrigerant circuit
Drawing	External			RK01B689
	Wiring			BH79N143
Standard attachment	Document			Installation Manual
	Accessory			Grounded lead wire ×1
Optional parts				Joint: CMY-Y62-G-E Header: CMY-Y64/68-G-E

	*1 Nominal cooling conditions	*2 Nominal heating conditions
Indoor :	27°C D.B./19°C W.B. [81°F D.B/66°F W.B.]	20°C D.B. [68°F D.B.]
Outdoor :	35°C D.B. [95°F D.B.]	7°C DB/6°C W.B. [45°F D.B./43°F W.B.]
Pipe length :	7.5 m [24-9/16 ft]	7.5 m [24-9/16 ft]
Level difference :	0 m [0 ft]	0 m [0 ft]

*3 10 to 52°C , when connecting following models: PKFY-P10/15/20/25/32VLM, PFFY-P20/25/32VLEM, PFFY-P20/25/32VLRM(M), PFFY-P20/25/32VKM, PFFY-P20/25/32VCM, PEFY-P40/63VMA3-E and M series, S series, and P series type indoor unit.
*4 −15 to 52°C , when using an optional air protect guide [PAC-SH95AG-E]. However, this condition does not apply to the indoor unit listed in *3.
*5 Liquid pipe diameter: 12.7 mm, when further piping length is longer than 60 m.
Note: 1. Nominal conditions *1, *2 are subject to ISO 15042.
2. Due to continuing improvement, above specifications may be subject to change without notice.

Unit converter

kcal/h = kW × 860
Btu/h = kW × 3,412
cfm = m3/min × 35.31
lb = kg/0.4536

Above specification data is subject to rounding variation.

PUMY-P112, 125, 140VKM5(-BS)

Unit: mm

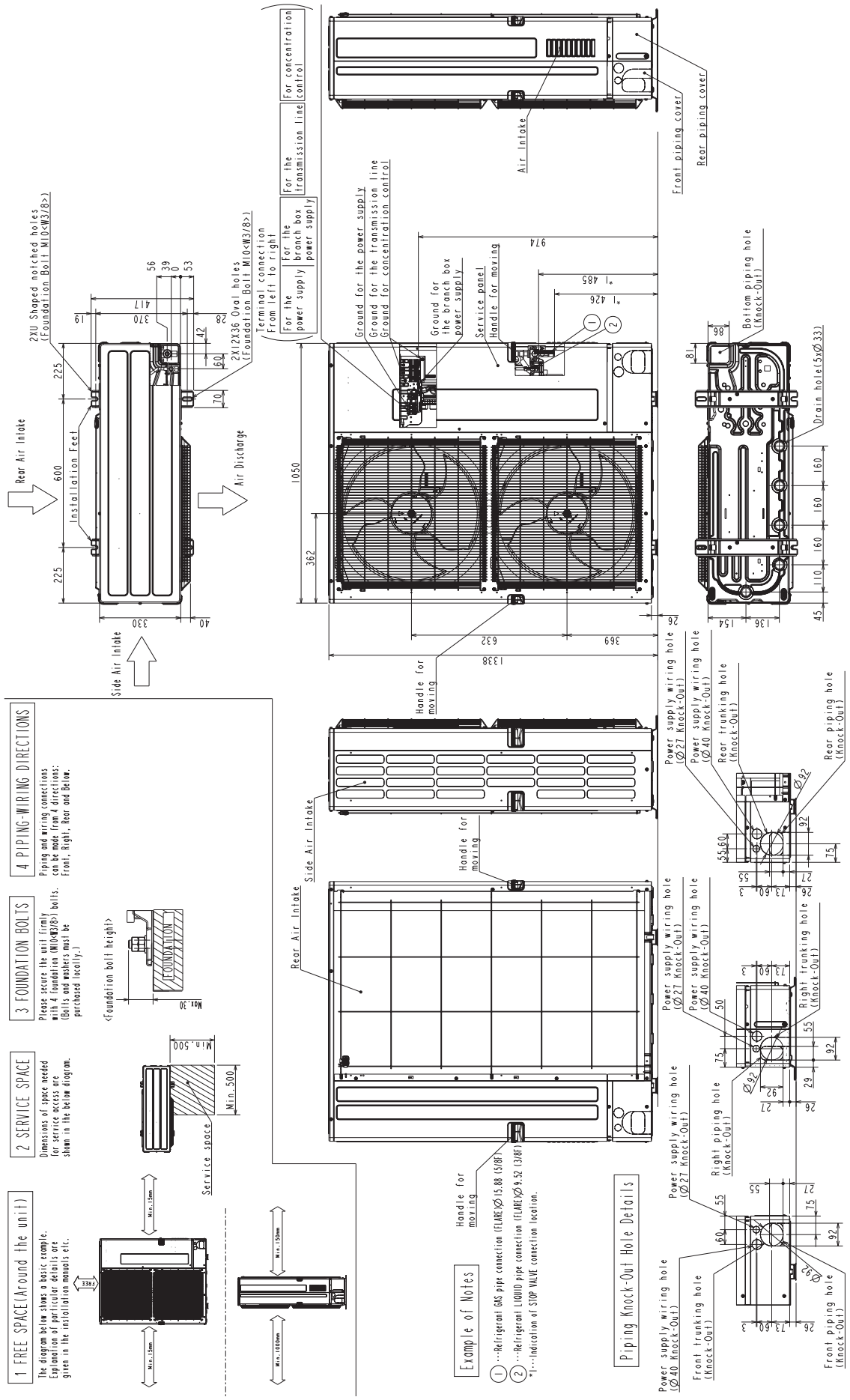

PUMY-P112, 125, 140YKM4(-BS)
PUMY-P112, 125, 140YKME4(-BS)

Unit: mm

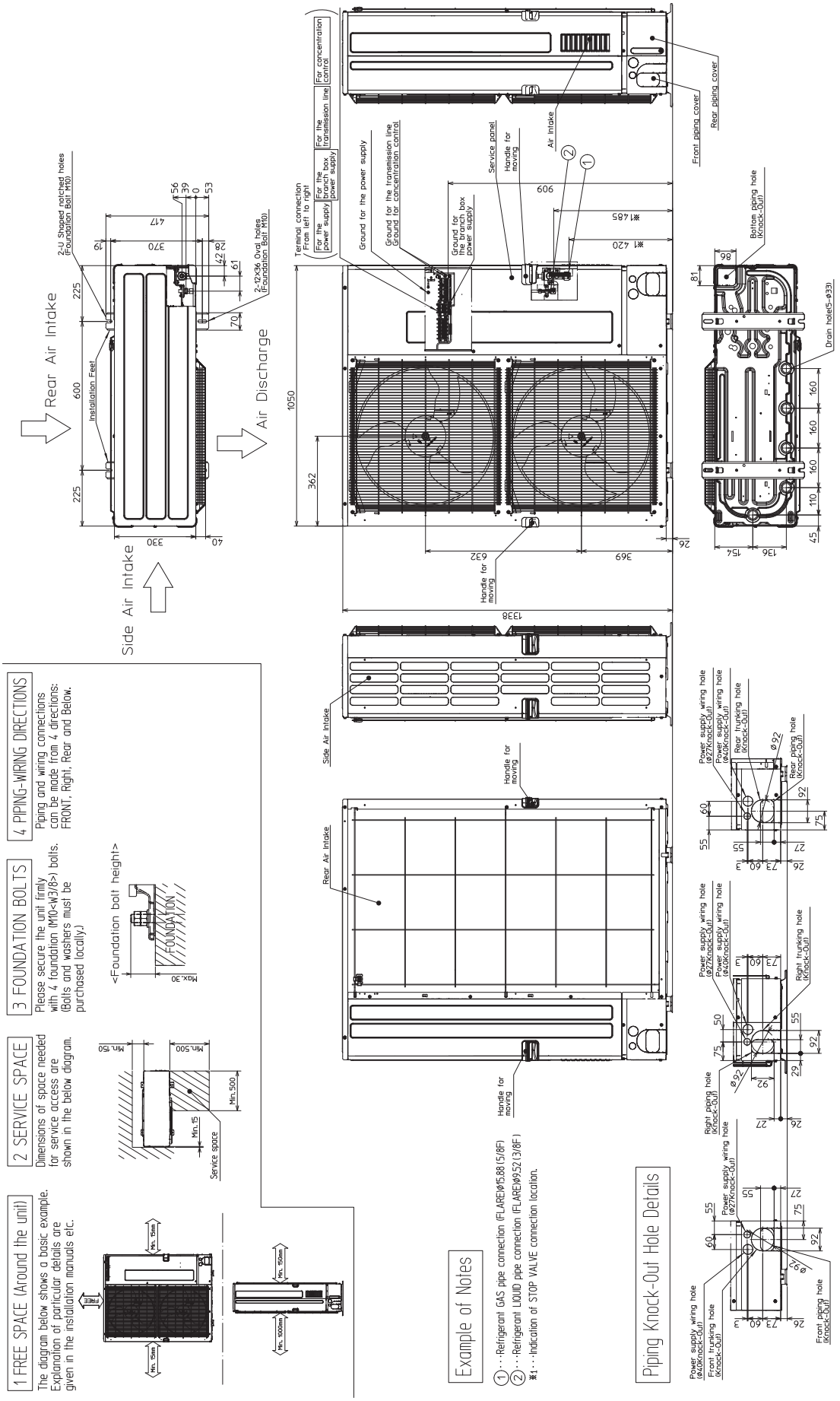

PUMY-P200YKM2(-BS)

Unit: mm

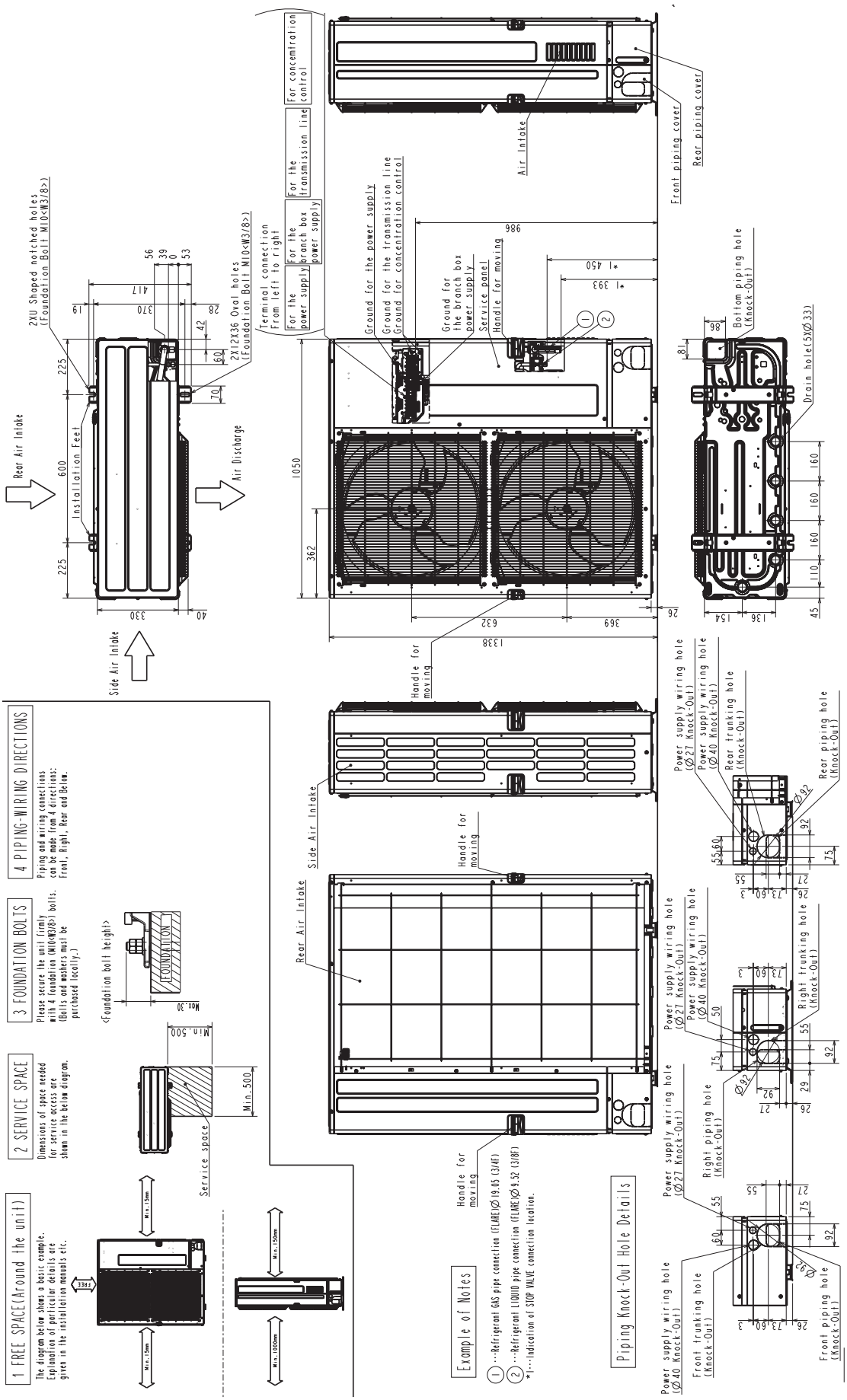

PUMY-P112, 125, 140VKM5(-BS)
PUMY-P112, 125, 140YKM4(-BS)
PUMY-P112, 125, 140YKME4(-BS)

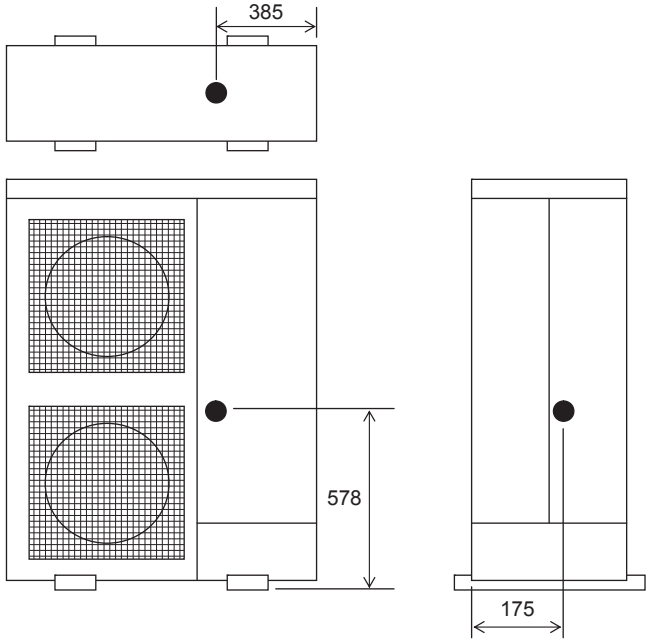

PUMY-P200YKM2(-BS)

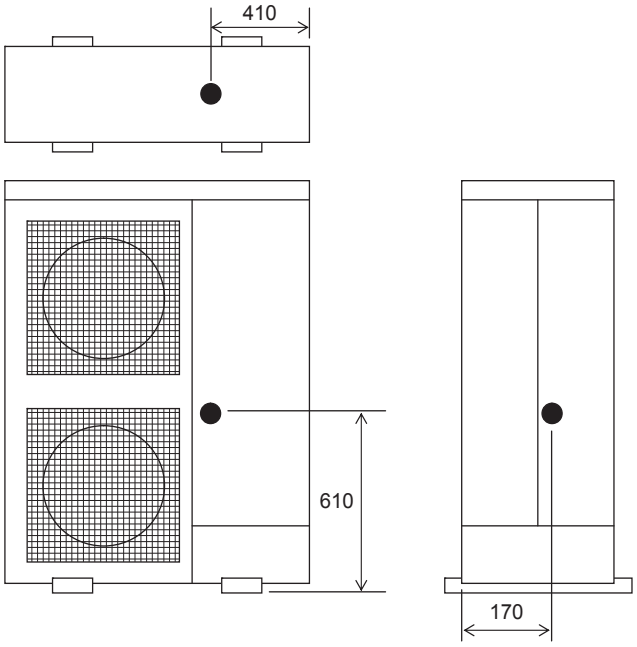

PUMY-P112, 125, 140VKM5(-BS)

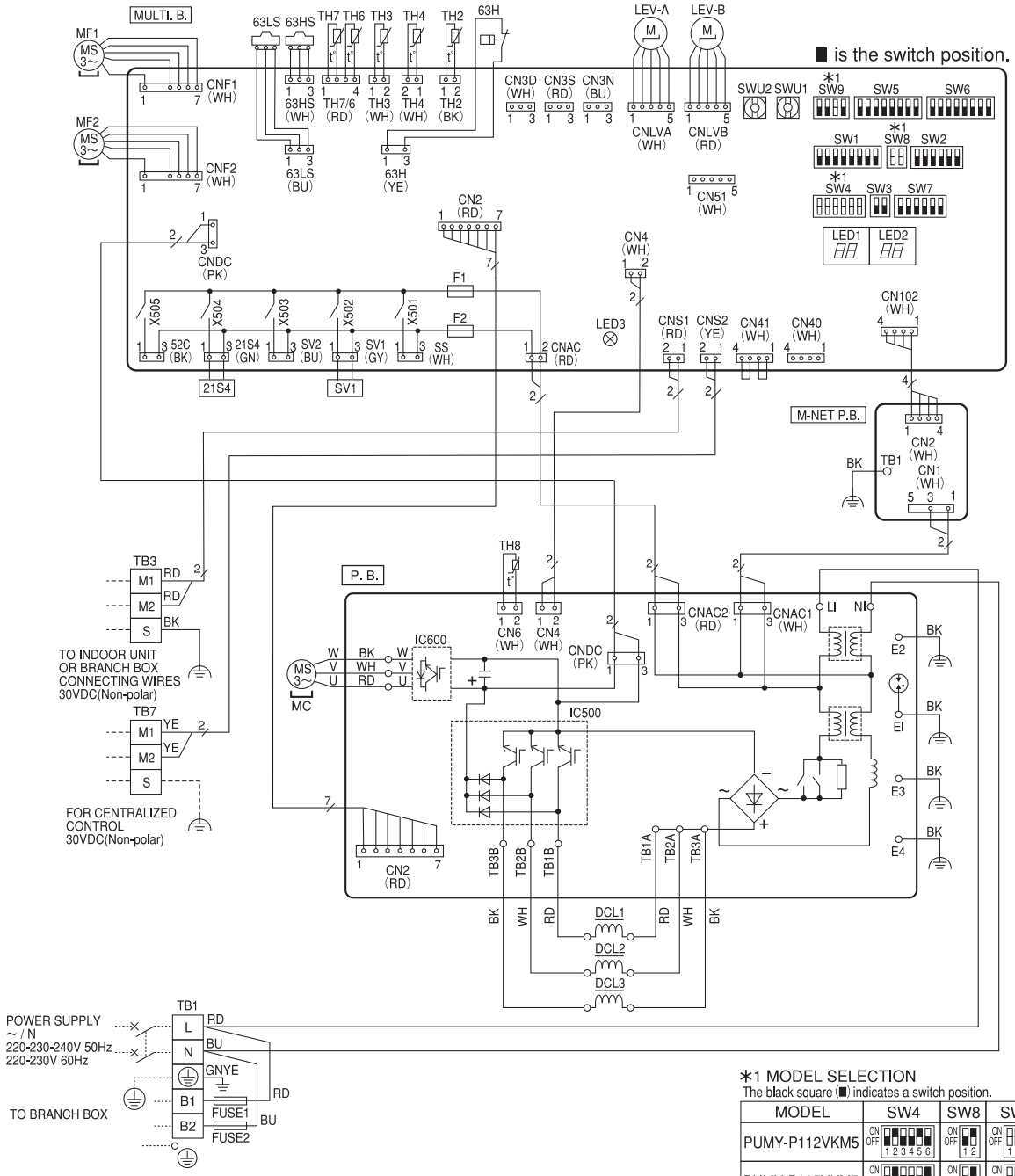

∗1 MODEL SELECTION
The black square (■) indicates a switch position.

MODEL	SW4	SW8	SW9
PUMY-P112VKM5	ON OFF 1 2 3 4 5 6	ON OFF 1 2	ON OFF 1 2 3 4
PUMY-P125VKM5	ON OFF 1 2 3 4 5 6	ON OFF 1 2	ON OFF 1 2 3 4
PUMY-P140VKM5	ON OFF 1 2 3 4 5 6	ON OFF 1 2	ON OFF 1 2 3 4

SYMBOL	NAME
TB1	Terminal Block 〈Power Supply〉
TB3	Terminal Block 〈Indoor/Outdoor, Branch Box/Outdoor Transmission Line〉
TB7	Terminal Block 〈Centralized Control Transmission Line〉
FUSE1, FUSE2	Fuse 〈T20AL250V〉
MC	Motor for Compressor
MF1, MF2	Fan Motor
21S4	Solenoid Valve Coil 〈4-Way Valve〉
63H	High Pressure Switch
63HS	High Pressure Sensor
63LS	Low Pressure Sensor
SV1	Solenoid Valve Coil 〈Bypass Valve〉
TH2	Thermistor 〈HIC Pipe〉
TH3	Thermistor 〈Outdoor Liquid Pipe〉
TH4	Thermistor 〈Compressor〉
TH6	Thermistor 〈Suction Pipe〉
TH7	Thermistor 〈Ambient〉

SYMBOL	NAME
TH8	Thermistor 〈Heat Sink〉
LEV-A, LEV-B	Linear Expansion Valve
DCL1, DCL2, DCL3	Reactor
P.B.	Power Circuit Board
U/V/W	Connection Terminal 〈U/V/W-Phase〉
LI	Connection Terminal 〈L-Phase〉
NI	Connection Terminal 〈N-Phase〉
TB1A, TB2A, TB3A TB1B, TB2B, TB3B	Connection Terminal 〈Reactor〉
IC500	Converter
IC600	Inverter
EI, E2, E3, E4	ConnectionTerminal 〈Electrical Parts Box〉
MULTI.B.	Multi Controller Circuit Board
SW1	Switch 〈Display Selection〉
SW2	Switch 〈Function Selection〉
SW3	Switch 〈Test Run〉
SW4	Switch 〈Model Selection〉
SW5	Switch 〈Function Selection〉

SYMBOL	NAME
SW6	Switch 〈Function Selection〉
SW7	Switch 〈Function Selection〉
SW8	Switch 〈Model Selection〉
SW9	Switch 〈Function/Model Selection〉
SWU1	Switch 〈Unit Address Selection, ones digit〉
SWU2	Switch 〈Unit Address Selection, tens digit〉
SS	Connector 〈Connection for Option〉
CN3D	Connector 〈Connection for Option〉
CN3S	Connector 〈Connection for Option〉
CN3N	Connector 〈Connection for Option〉
CN51	Connector 〈Connection for Option〉
LED1, LED2	LED 〈Operation Inspection Display〉
LED3	LED 〈Power Supply to Main Microcomputer〉
F1, F2	Fuse 〈T6.3AL250V〉
X501～X505	Relay
M-NET P.B.	M-NET Power Circuit Board
TB1	ConnectionTerminal 〈Electrical Parts Box〉

PUMY-P112, 125, 140YKM4(-BS)

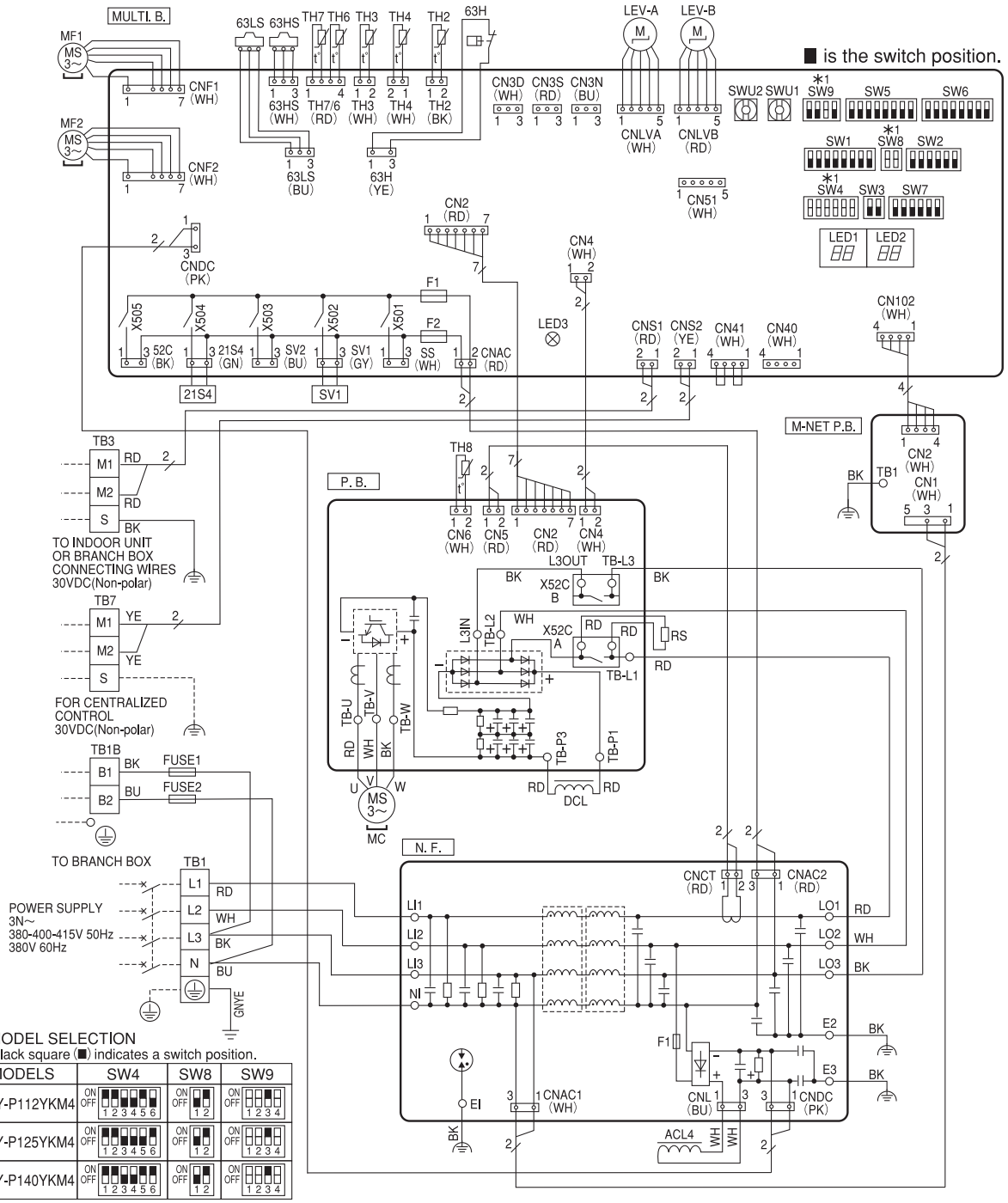

∗1 MODEL SELECTION
The black square (■) indicates a switch position.

MODELS	SW4	SW8	SW9
PUMY-P112YKM4	ON OFF 1 2 3 4 5 6	ON OFF 1 2	ON OFF 1 2 3 4
PUMY-P125YKM4	ON OFF 1 2 3 4 5 6	ON OFF 1 2	ON OFF 1 2 3 4
PUMY-P140YKM4	ON OFF 1 2 3 4 5 6	ON OFF 1 2	ON OFF 1 2 3 4

SYMBOL	NAME
TB1	Terminal Block 〈Power Supply〉
TB1B	Terminal Block 〈Branch Box〉
TB3	Terminal Block 〈Indoor/Outdoor, Branch Box/Outdoor Transmission Line〉
TB7	Terminal Block 〈Centralized Control Transmission Line〉
FUSE1,FUSE2	Fuse 〈T20AL250V〉
MC	Motor for Compressor
MF1,MF2	Fan Motor
21S4	Solenoid Valve Coil 〈4-Way Valve〉
63H	High Pressure Switch
63HS	High Pressure Sensor
63LS	Low Pressure Sensor
SV1	Solenoid Valve Coil 〈Bypass Valve〉
TH2	Thermistor 〈HIC Pipe〉
TH3	Thermistor 〈Outdoor Liquid Pipe〉
TH4	Thermistor 〈Compressor〉
TH6	Thermistor 〈Suction Pipe〉
TH7	Thermistor 〈Ambient〉
TH8	Thermistor 〈Heat Sink〉

SYMBOL	NAME
RS	Rush Current Protect Resistor
LEV-A,LEV-B	Linear Expansion Valve
ACL4	Reactor
DCL	Reactor
P.B.	Power Circuit Board
TB-U/V/W	Connection Terminal 〈U/V/W-Phase〉
TB-L1/L2/L3	Connection Terminal 〈L1/L2/L3-Power Supply〉
TB-P1/P3	Connection Terminal 〈Reactor〉
X52CA/B	52C Relay
N.F.	Noise Filter Circuit Board
LO1/LO2/LO3	Connection Terminal 〈L1/L2/L3-Power Supply〉
LI1/LI2/LI3/NI	Connection Terminal 〈L1/L2/L3/N-Power Supply〉
EI,E2,E3	ConnectionTerminal 〈Electrical Parts Box〉
F1	Fuse 〈T6.3AL250V〉
MULTI.B.	Multi Controller Circuit Board
SW1	Switch 〈Display Selection〉
SW2	Switch 〈Function Selection〉
SW3	Switch 〈Test Run〉
SW4	Switch 〈Model Selection〉
SW5	Switch 〈Function Selection〉

SYMBOL	NAME
SW6	Switch 〈Function Selection〉
SW7	Switch 〈Function Selection〉
SW8	Switch 〈Model Selection〉
SW9	Switch 〈Function/Model Selection〉
SWU1	Switch 〈Unit Address Selection, ones digit〉
SWU2	Switch 〈Unit Address Selection, tens digit〉
CNS1	Connector 〈Indoor/Outdoor, Branch Box/Outdoor Transmission Line〉
CNS2	Connector 〈Centralized Control Transmission Line〉
SS	Connector 〈Connection for Option〉
CN3D	Connector 〈Connection for Option〉
CN3S	Connector 〈Connection for Option〉
CN3N	Connector 〈Connection for Option〉
CN51	Connector 〈Connection for Option〉
LED1,LED2	LED 〈Operation Inspection Display〉
LED3	LED 〈Power Supply to Main Microcomputer〉
F1,F2	Fuse 〈T6.3AL250V〉
X501～505	Relay
M-NET P.B.	M-NET Power Circuit Board
TB1	ConnectionTerminal 〈Electrical Parts Box〉

PUMY-P112, 125, 140YKME4(-BS)

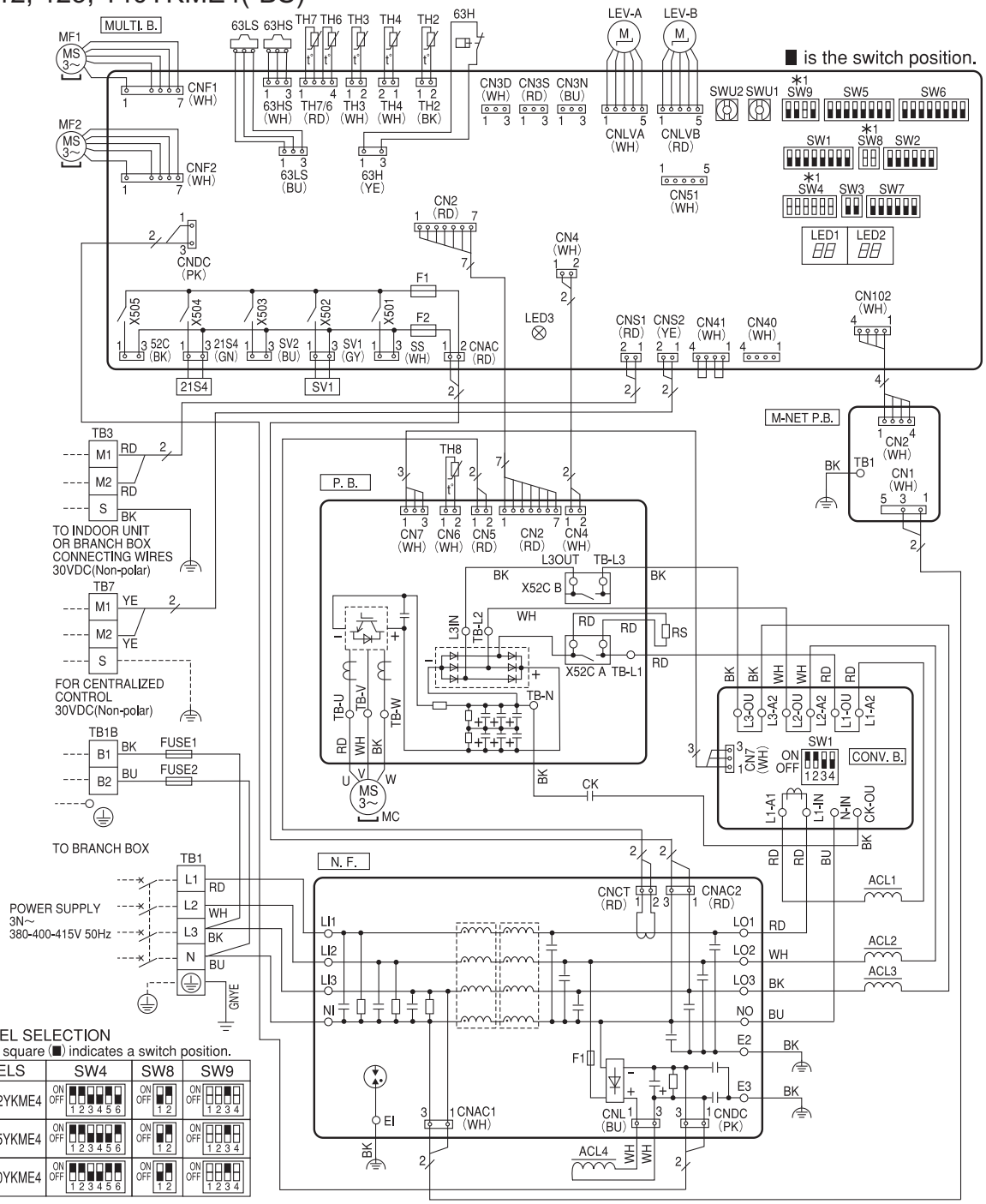

∗1 MODEL SELECTION
The black square (■) indicates a switch position.

MODELS	SW4	SW8	SW9
PUMY-P112YKME4	ON OFF 1 2 3 4 5 6	ON OFF 1 2	ON OFF 1 2 3 4
PUMY-P125YKME4	ON OFF 1 2 3 4 5 6	ON OFF 1 2	ON OFF 1 2 3 4
PUMY-P140YKME4	ON OFF 1 2 3 4 5 6	ON OFF 1 2	ON OFF 1 2 3 4

SYMBOL	NAME
TB1	Terminal Block 〈Power Supply〉
TB1B	Terminal Block 〈Branch Box〉
TB3	Terminal Block 〈Indoor/Outdoor, Branch Box/Outdoor Transmission Line〉
TB7	Terminal Block 〈Centralized Control Transmission Line〉
FUSE1,FUSE2	Fuse 〈T20AL250V〉
MC	Motor for Compressor
MF1,MF2	Fan Motor
21S4	Solenoid Valve Coil 〈4-Way Valve〉
63H	High Pressure Switch
63HS	High Pressure Sensor
63LS	Low Pressure Sensor
SV1	Solenoid Valve Coil 〈Bypass Valve〉
TH2	Thermistor 〈HIC Pipe〉
TH3	Thermistor 〈Outdoor Liquid Pipe〉
TH4	Thermistor 〈Compressor〉
TH6	Thermistor 〈Suction Pipe〉
TH7	Thermistor 〈Ambient〉
TH8	Thermistor 〈Heat Sink〉
RS	Rush Current Protect Resistor
CK	Capacitor
LEV-A,LEV-B	Linear Expansion Valve

SYMBOL	NAME
ACL1,ACL2,ACL3,ACL4	Reactor
P.B.	Power Circuit Board
TB-U/V/W	Connection Terminal 〈U/V/W-Phase〉
TB-L1/L2/L3	Connection Terminal 〈L1/L2/L3-Power Supply〉
TB-N	Connection Terminal
X52CA/B	52C Relay
CONV.B.	Converter Circuit Board
SW1	Switch 〈Model Selection〉
L1-A1/IN	Connection Terminal 〈L1-Power Supply〉
L1-A2/OU	Connection Terminal 〈L1-Power Supply〉
L2-A2/OU	Connection Terminal 〈L2-Power Supply〉
L3-A2/OU	Connection Terminal 〈L3-Power Supply〉
N-IN	Connection Terminal
CK-OU	Connection Terminal
N.F.	Noise Filter Circuit Board
LO1/LO2/LO3/NO	Connection Terminal 〈L1/L2/L3/N-Power Supply〉
LI1/LI2/LI3/NI	Connection Terminal 〈L1/L2/L3/N-Power Supply〉
EI,E2,E3	ConnectionTerminal 〈Electrical Parts Box〉
F1	Fuse 〈T6.3AL250V〉
MULTI.B.	Multi Controller Circuit Board
SW1	Switch 〈Display Selection〉
SW2	Switch 〈Function Selection〉
SW3	Switch 〈Test Run〉

SYMBOL	NAME
SW4	Switch 〈Model Selection〉
SW5	Switch 〈Function Selection〉
SW6	Switch 〈Function Selection〉
SW7	Switch 〈Function Selection〉
SW8	Switch 〈Model Selection〉
SW9	Switch 〈Function/Model Selection〉
SWU1	Switch 〈Unit Address Selection, ones digit〉
SWU2	Switch 〈Unit Address Selection, tens digit〉
CNS1	Connector 〈Indoor/Outdoor, Branch Box/ Outdoor Transmission Line〉
CNS2	Connector 〈Centralized Control Transmission Line〉
SS	Connector 〈Connection for Option〉
CN3D	Connector 〈Connection for Option〉
CN3S	Connector 〈Connection for Option〉
CN3N	Connector 〈Connection for Option〉
CN51	Connector 〈Connection for Option〉
LED1,LED2	LED 〈Operation Inspection Display〉
LED3	LED 〈Power Supply to Main Microcomputer〉
F1,F2	Fuse 〈T6.3AL250V〉
X501～505	Relay
M-NET P.B.	M-NET Power Circuit Board
TB1	ConnectionTerminal 〈Electrical Parts Box〉

PUMY-P200YKM2(-BS)

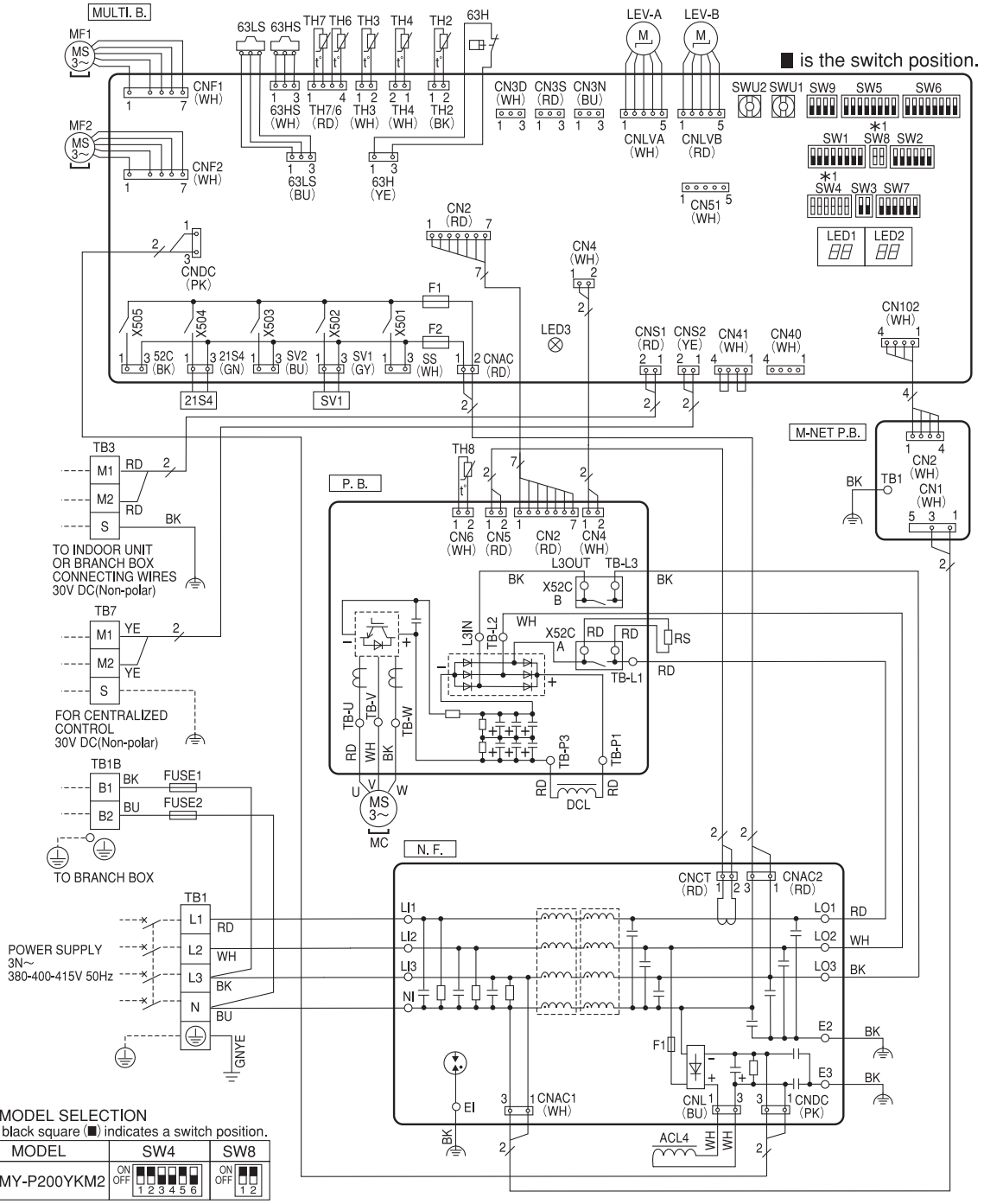

∗1 MODEL SELECTION
The black square (■) indicates a switch position.

MODEL	SW4	SW8
PUMY-P200YKM2	ON OFF 1 2 3 4 5 6	ON OFF 1 2

SYMBOL	NAME	SYMBOL	NAME	SYMBOL	NAME
TB1	Terminal Block 〈Power Supply〉	RS	Rush Current Protect Resistor	SW6	Switch 〈Function Selection〉
TB1B	Terminal Block 〈Branch Box〉	LEV-A, LEV-B	Linear Expansion Valve	SW7	Switch 〈Function Selection〉
TB3	Terminal Block 〈Indoor/Outdoor, Branch Box/Outdoor Transmission Line〉	ACL4	Reactor	SW8	Switch 〈Model Selection〉
		DCL	Reactor	SW9	Switch 〈Function/Model Selection〉
TB7	Terminal Block 〈Centralized Control Transmission Line〉	P.B.	Power Circuit Board	SWU1	Switch 〈Unit Address Selection, ones digit〉
		TB-L1/L2/L3	Connection Terminal 〈L1/L2/L3-Power Supply〉	SWU2	Switch 〈Unit Address Selection, tens digit〉
FUSE1, FUSE2	Fuse 〈T20AL250V〉	TB-P1/P3	Connection Terminal 〈Reactor〉	CNS1	Connector 〈Indoor/Outdoor, Branch Box/ Outdoor Transmission Line〉
MC	Motor for Compressor	TB-U/V/W	Connection Terminal 〈U/V/W-Phase〉		
MF1, MF2	Fan Motor	X52CA/B	52C Relay	CNS2	Connector 〈Centralized Control Transmission Line〉
21S4	Solenoid Valve Coil 〈4-Way Valve〉	N.F.	Noise Filter Circuit Board	SS	Connector 〈Connection For Option〉
63H	High Pressure Switch	LO1/LO2/LO3	Connection Terminal 〈L1/L2/L3-Power Supply〉	CN3D	Connector 〈Connection For Option〉
63HS	High Pressure Sensor	LI1/LI2/LI3/NI	Connection Terminal 〈L1/L2/L3/N-Power Supply〉	CN3S	Connector 〈Connection For Option〉
63LS	Low Pressure Sensor	EI/E2/E3	ConnectionTerminal 〈Electrical Parts Box〉	CN3N	Connector 〈Connection For Option〉
SV1	Solenoid Valve Coil 〈Bypass Valve〉	F1	Fuse 〈T6.3AL250V〉	CN51	Connector 〈Connection For Option〉
TH2	Thermistor 〈HIC Pipe〉	MULTI.B.	Multi Controller Circuit Board	LED1, LED2	LED 〈Operation Inspection Display〉
TH3	Thermistor 〈Outdoor Liquid Pipe〉	SW1	Switch 〈Display Selection〉	LED3	LED 〈Power Supply to Main Microcomputer〉
TH4	Thermistor 〈Compressor〉	SW2	Switch 〈Function Selection〉	F1, F2	Fuse 〈T6.3AL250V〉
TH6	Thermistor 〈Suction Pipe〉	SW3	Switch 〈Test Run〉	X501～505	Relay
TH7	Thermistor 〈Ambient〉	SW4	Switch 〈Model Selection〉	M-NET P.B.	M-NET Power Circuit Board
TH8	Thermistor 〈Heat Sink〉	SW5	Switch 〈Function Selection〉	TB1	ConnectionTerminal 〈Electrical Parts Box〉

Measurement condition
PUMY-P112, 125, 140VKM5(-BS)
PUMY-P112, 125, 140YKM4(-BS)
PUMY-P112, 125, 140YKME4(-BS)

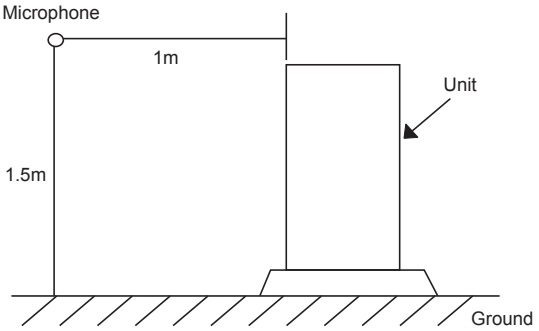

Sound level of PUMY-P140VKM5/PUMY-P140YKM(E)4

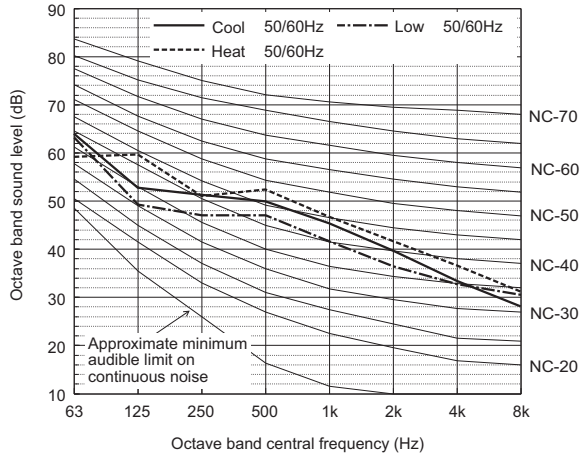

		63	125	250	500	1k	2k	4k	8k	dB(A)
Standard Cooling	50/60Hz	64.0	52.8	51.3	50.0	45.4	39.7	33.5	28.2	51.0
Standard Heating	50/60Hz	59.2	59.7	51.1	52.4	46.8	41.7	36.7	31.2	53.0
Low noise mode	50/60Hz	63.2	49.2	47.0	47.1	41.6	36.5	32.8	30.6	48.0

When Low noise mode is set,the A/C system's capacity is limited. The system could return to normal operation from Low noise mode automatically in the case that the operation condition is severe.

Sound level of PUMY-P112VKM5/PUMY-P112YKM(E)4

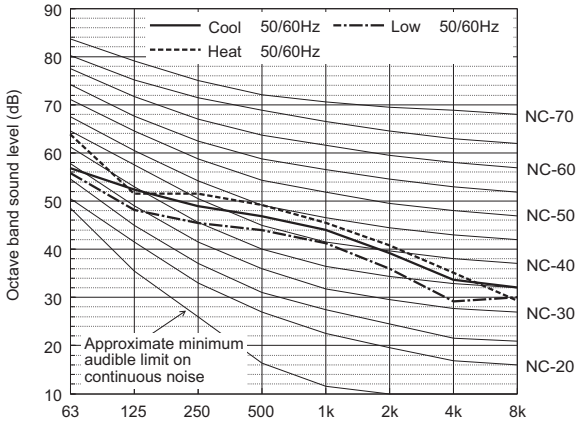

		63	125	250	500	1k	2k	4k	8k	dB(A)
Standard Cooling	50/60Hz	56.9	52.4	49.0	46.9	44.0	39.2	33.7	32.1	49.0
Standard Heating	50/60Hz	63.9	51.6	51.6	49.2	45.5	40.8	35.1	29.3	51.0
Low noise mode	50/60Hz	55.8	48.1	45.5	44.0	41.2	36.0	29.2	30.0	46.0

When Low noise mode is set,the A/C system's capacity is limited. The system could return to normal operation from Low noise mode automatically in the case that the operation condition is severe.

Sound level of PUMY-P125VKM5/PUMY-P125YKM(E)4

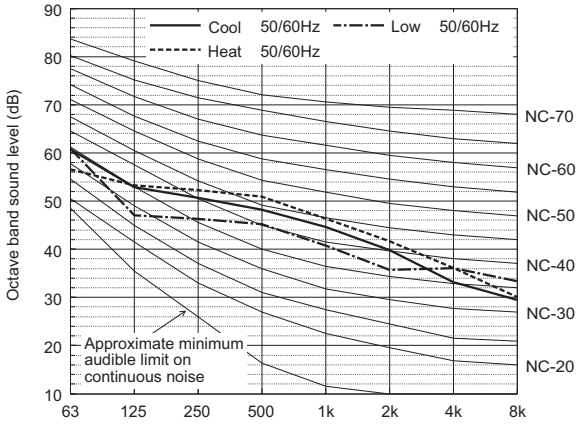

		63	125	250	500	1k	2k	4k	8k	dB(A)
Standard Cooling	50/60Hz	60.8	52.8	50.6	48.2	44.7	39.9	33.2	29.5	50.0
Standard Heating	50/60Hz	56.6	53.3	52.2	50.9	46.4	41.7	36.2	30.1	52.0
Low noise mode	50/60Hz	60.9	47.1	46.3	45.2	40.7	35.7	36.1	33.4	47.0

When Low noise mode is set,the A/C system's capacity is limited. The system could return to normal operation from Low noise mode automatically in the case that the operation condition is severe.

Measurement condition
PUMY-P200YKM2(-BS)

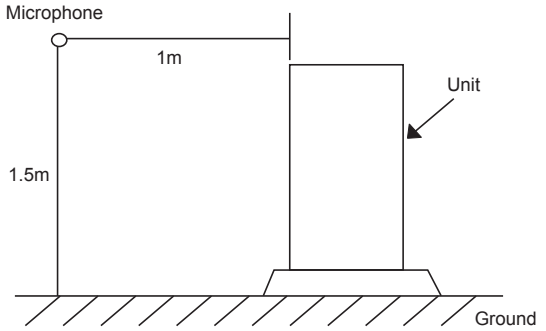

Sound level of PUMY-P200YKM2

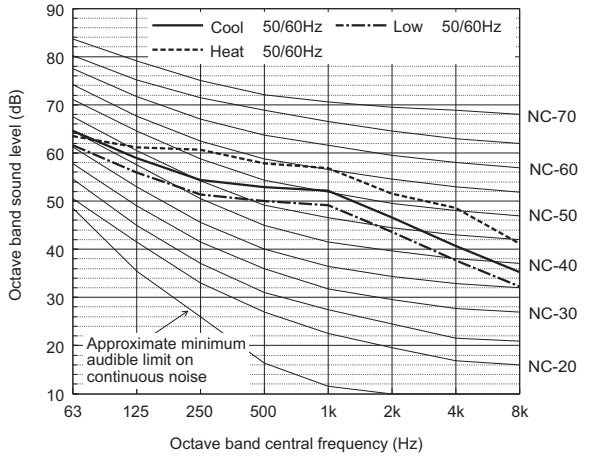

		63	125	250	500	1k	2k	4k	8k	dB(A)
Standard Cooling	50/60Hz	64.6	58.9	54.4	53.0	52.1	46.6	40.7	35.3	56.0
Standard Heating	50/60Hz	63.4	61.2	60.7	57.8	56.9	51.6	48.6	41.1	61.0
Low noise mode	50/60Hz	61.6	55.9	51.4	50.0	49.1	43.6	37.7	32.3	53.0

When Low noise mode is set,the A/C system's capacity is limited. The system could return to normal operation from Low noise mode automatically in the case that the operation condition is severe.

• **Cooling**

PUMY-P-VKM5/YKM4/YKME4
PUMY-P-YKM2

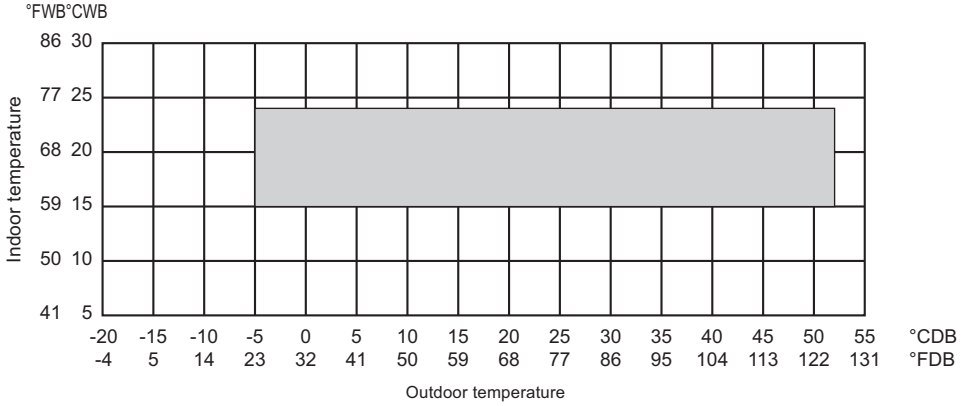

* [PUMY-P-VKM5/YKM4/YKME4]
10 to 52°CDB (50 to 126°FDB), when connecting following models: PKFY-P10/15/20/25/32VLM, PFFY-P20/25/32VLEM, PFFY-P20/25/32VLRM(M), PFFY-P20/25/32VKM, PFFY-P20/25/32VCM, PEFY-P25/32/40VMA3; and M-Series, S-Series, and P-Series type indoor unit.
[PUMY-P-YKM2]
10 to 52°CDB (50 to 126°FDB), when connecting following models: PKFY-P10/15/20/25/32VLM, PFFY-P20/25/32VLEM, PFFY-P20/25/32VLRM(M), PFFY-P20/25/32VKM, PFFY-P20/25/32VCM, PEFY-P40/63VMA3; and M-Series, S-Series, and P-Series type indoor unit.

• **Heating**

PUMY-P-VKM5/YKM4/YKME4
PUMY-P-YKM2

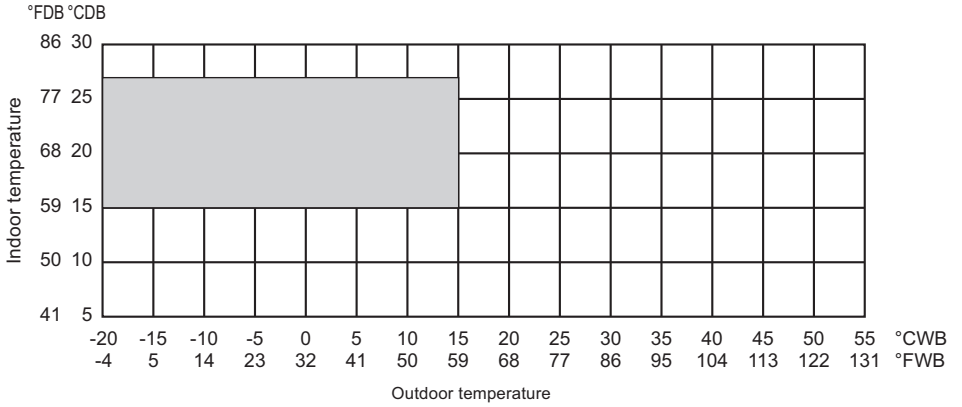

7-1. Selection of Cooling/Heating Units

How to determine the capacity when less than or equal 100% indoor model size units are connected in total:

The purpose of this flow chart is to select the indoor and outdoor units. For other purposes, this flow chart is intended only for reference.

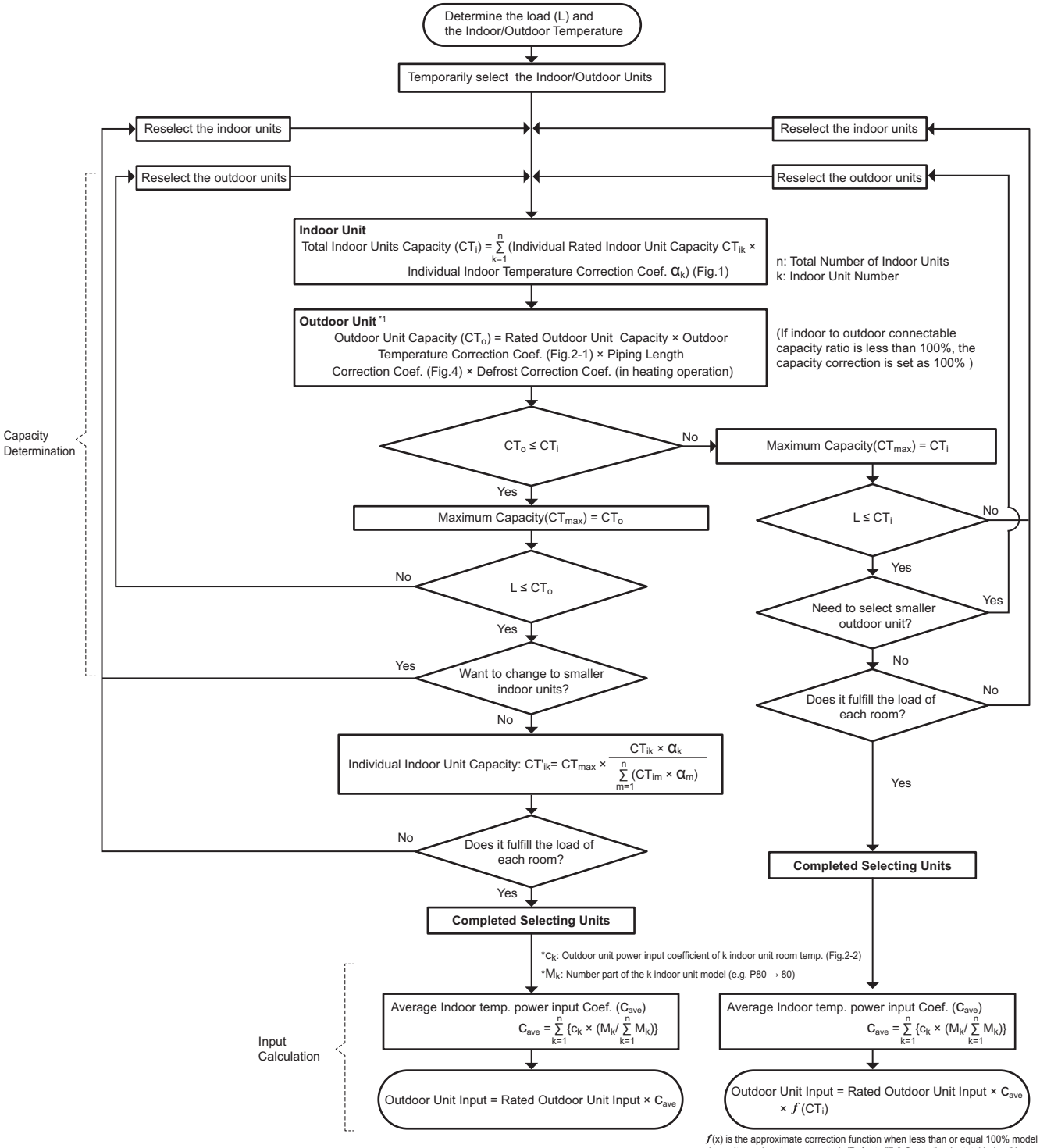

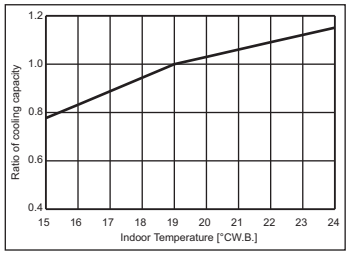

Fig.1 Indoor unit temperature correction *1

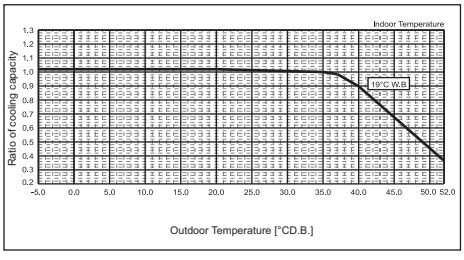

Fig.2-1 Outdoor unit temperature correction (capacity) *1

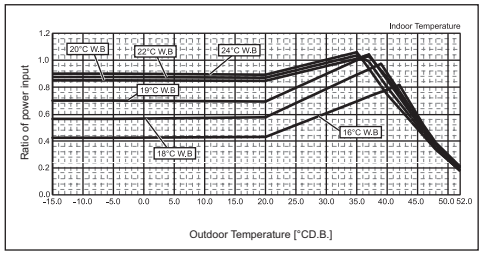

Fig.2-2 Outdoor unit temperature correction (power input) *1

*1 This figure shows the characteristic of PUMY-P112/125/140VKM5 (-BS) and PUMY-P112/125/140YKM4 (-BS).

How to determine the capacity when greater than 100% indoor model size units are connected in total:

The purpose of this flow chart is to select the indoor and outdoor units. For other purposes, this flow chart is intended only for reference.

Determine the load (L) and the Indoor/Outdoor Temperature

Temporarily select the indoor/outdoor units

Reselect the indoor units

Reselect the outdoor units

Indoor Unit
Total Indoor Units Capacity (CT_i) = $\sum_{k=1}^{n}$ (Individual Rated Indoor Unit Capacity CT_{ik} × Individual Indoor Temperature Correction Coef. α_k) (Fig.1)

n: Total Number of Indoor Units
k: Indoor Unit Number

Outdoor Unit *1
Outdoor Unit Capacity (CT_o) = Rated Outdoor Unit Capacity × $G(CT_i)$ × Outdoor Temperature Correction Coef. (Fig.2-1) × Piping Length Correction Coef. (Fig.4) × Defrost Correction Coef. (in heating)

$G(x)$ is the approximate correction function when greater than 100% model size units are connected. (Refer to "7-3 Correction by total indoor")

$CT_o \le CT_i$?

No → Maximum Capacity(CT_{max}) = CT_i

Yes → Maximum Capacity(CT_{max}) = CT_o

$L \le CT_i$?

No → Reselect the indoor units

Yes → Need to select smaller outdoor unit?

Yes → Reselect the outdoor units

No → Does it fulfill the load of each room?

No → Reselect the indoor units

Yes → **Completed Selecting Units**

$L \le CT_o$?

No → Reselect the outdoor units

Yes → Want to change to smaller indoor units?

Yes → Reselect the indoor units

No → Individual Indoor Unit Capacity: $CT'_{ik} = CT_{max} \times \frac{CT_{ik} \times \alpha_k}{\sum_{m=1}^{n} (CT_{im} \times \alpha_m)}$

Does it fulfill the load of each room?

No → Reselect the indoor units

Yes → **Completed Selecting Units**

Completed Selecting Units

Rated Outdoor Unit Capacity < Total Indoor Units Capacity ?

No → Outdoor Unit Input = Rated Outdoor Unit Input × Outdoor Temperature Correction Coef. (Fig.2-2) × $f(CT_i)$

$f(x)$ is the approximate correction function when less than or equal 100% model size units are input as connected. (Refer to "7-3 Correction by total indoor")

Yes

*c_k: Outdoor unit power input coefficient of k indoor unit room temp. (Fig.2-2)
*M_k: Number part of the k indoor unit model (e.g. P80 → 80)

Average Indoor temp. power input Coef. (C_{ave})
$C_{ave} = \sum_{k=1}^{n} \{c_k \times (M_k / \sum_{k=1}^{n} M_k)\}$

Outdoor Unit Input = Rated Outdoor Unit Input × C_{ave} × $F(CT_i)$

$F(x)$ is the approximate correction function when greater than 100% model size units are input as connected. (Refer to "7-3 Correction by total indoor")

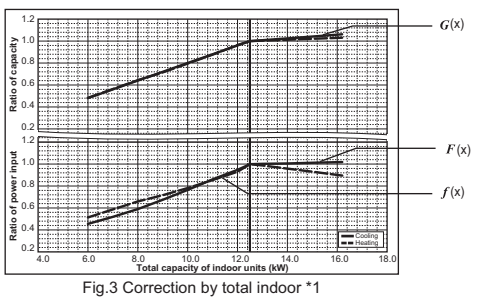

Fig.3 Correction by total indoor *1

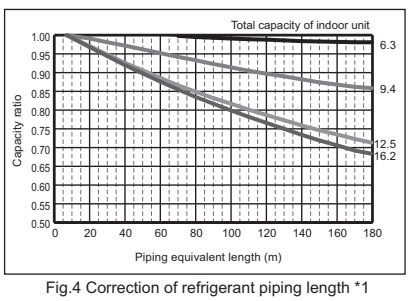

Fig.4 Correction of refrigerant piping length *1

*1 This figure shows the characteristic of PUMY-P112VKM5 (-BS) and PUMY-P112YKM4 (-BS).

<Cooling>

Design Condition	
Outdoor Design Dry Bulb Temperature	**40.5ºC**
Total Cooling Load	**8.5 kW**
Room1	
Indoor Design Dry Bulb Temperature	**27ºC**
Indoor Design Wet Bulb Temperature	**20ºC**
Cooling Load	**4.0 kW**
Room2	
Indoor Design Dry Bulb Temperature	**32ºC**
Indoor Design Wet Bulb Temperature	**22ºC**
Cooling Load	**4.5 kW**
<Other>	
Indoor/Outdoor Equivalent Piping Length	**60 m**

1. Cooling Calculation

(1) Temporary Selection of Indoor Units

Room1

PEFY-P40 **4.5 kW (Rated)**

Room2

PEFY-P50 **5.6 kW (Rated)**

(2) Total Indoor Units Capacity

P40 + P50 = P90

(3) Selection of Outdoor Unit

The P112 outdoor unit is selected as total indoor units capacity is P90

PUMY-P112 **12.5 kW**

(4) Total Indoor Units Capacity Correction Calculation

Room1

Indoor Design Wet Bulb Temperature Correction (20ºC) 1.03 (Refer to Figure 1)

Room2

Indoor Design Wet Bulb Temperature Correction (22ºC) 1.09 (Refer to Figure 1)

Total Indoor Units Capacity (CT_i)

$CT_i = \Sigma$ (Indoor Unit Rating × Indoor Design Temperature Correction)

= 4.5 × 1.03 + 5.6 × 1.09

= 10.7 kW

(5) Outdoor Unit Correction Calculation

Outdoor Design Dry Bulb Temperature Correction (40.5ºC) 0.88 (Refer to Figure 2)

Piping Length Correction (60 m) 0.94 (Refer to Figure 3)

Total Outdoor Unit Capacity (CT_o)

CT_o = Outdoor Rating × Outdoor Design Temperature Correction × Piping Length Correction

= 12.5 × 0.88 × 0.94

= 10.3 kW

(6) Determination of Maximum System Capacity

Comparison of Capacity between Total Indoor Units Capacity (CT_i) and Total Outdoor Unit Capacity (CT_o)

CT_i = 10.7 > CT_o = 10.3, thus, select CT_o.

$CT_{max} = CT_o$ = 10.3 kW

(7) Comparison with Essential Load

Against the essential load 8.5 kW, the maximum system capacity is 10.3 kW: Proper outdoor units have been selected.

(8) Calculation of Maximum Indoor Unit Capacity of Each Room

$CT_{max} = CT_o$, thus, calculate by the calculation below

Room1

Maximum Capacity × Room1 Capacity after the Temperature Correction/(Room1,2 Total Capacity after the Temperature Correction

= 10.3 × (4.5 × 1.03)/(4.5 × 1.03 + 5.6 × 1.09)

= 4.4 kW **OK: fulfills the load 4.0 kW**

Room2

Maximum Capacity × Room2 Capacity after the Temperature Correction/(Room1,2 Total Capacity after the Temperature Correction)

= 10.3 × (5.6 × 1.09)/(4.5 × 1.03 + 5.6 × 1.09)

= 5.9 kW **OK: fulfills the load 4.5 kW**

Note: If $CT_{max} = CT_i$, please refer to the <Heating> section to calculate the Maximum Indoor Unit Capacity of Each Room.

Go on to the heating trial calculation since the selected units fulfill the cooling loads of Room 1, 2.

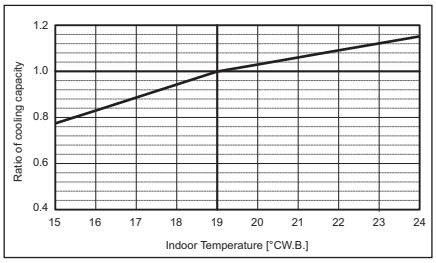

Figure 1 **Indoor unit temperature correction**
To be used to correct indoor unit only

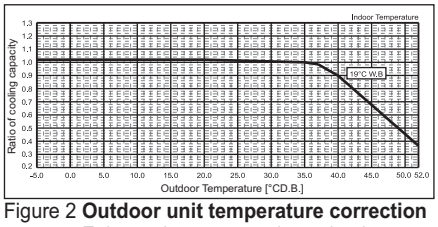

Figure 2 **Outdoor unit temperature correction**
To be used to correct outdoor unit only

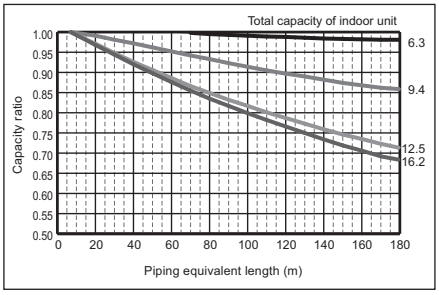

Figure 3 **Correction of refrigerant piping length**

<Heating>

Design Condition	
Outdoor Design Wet Bulb Temperature	**2ºC**
Total Heating Load	**10.3 kW**
Room1	
Indoor Design Dry Bulb Temperature	**21ºC**
Heating Load	**4.8 kW**
Room2	
Indoor Design Dry Bulb Temperature	**23ºC**
Heating Load	**5.5 kW**
<Other>	
Indoor/Outdoor Equivalent Piping Length	**90 m**

2. Heating Calculation

(1) Temporary Selection of Indoor Units

Room1

PEFY-P40 **5.0 kW (Rated)**

Room2

PEFY-P50 **6.3 kW (Rated)**

(2) Total Indoor Units Capacity

P40 + P50 = P90

(3) Selection of Outdoor Unit

The P112 outdoor unit is selected as total indoor units capacity is P90

PUMY-P112 **14.0 kW**

(4) Total Indoor Units Capacity Correction Calculation

Room1

Indoor Design Dry Bulb Temperature Correction (21ºC) 0.96 (Refer to Figure 4)

Room2

Indoor Design Dry Bulb Temperature Correction (23ºC) 0.88 (Refer to Figure 4)

Total Indoor Units Capacity (CT_i)

$CT_i = \Sigma$ (Indoor Unit Rating × Indoor Design Temperature Correction)

= 5.0 × 0.96 + 6.3 × 0.88

= 10.3 kW

(5) Outdoor Unit Correction Calculation

Outdoor Design Wet Bulb Temperature Correction (2ºC) 1.0 (Refer to Figure 5)

Piping Length Correction (90 m) 0.95 (Refer to Figure 6)

Defrost Correction 0.89 (Refer to Table 1)

Total Outdoor Unit Capacity (CT_o)

CT_o = Outdoor Unit Rating × Outdoor Design Temperature Correction × Piping Length Correction × Defrost Correction

= 14.0 × 1.0 × 0.95 × 0.89

= 11.8 kW

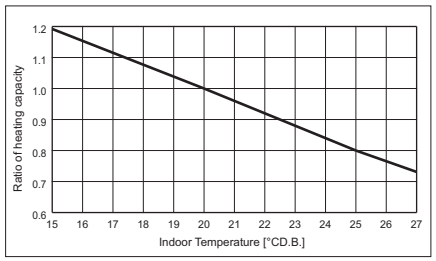

Figure 4 **Indoor unit temperature correction**
To be used to correct indoor unit only

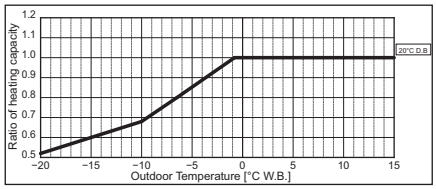

Figure 5 **Outdoor unit temperature correction**
To be used to correct outdoor unit only

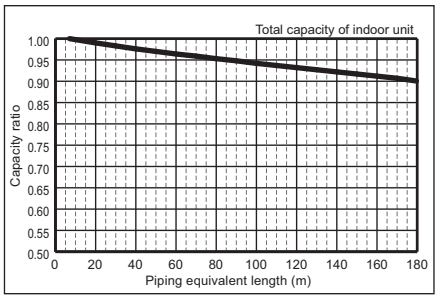

Figure 6 **Correction of refrigerant piping length**

(6) Determination of Maximum System Capacity

Comparison of Capacity between Total Indoor Units Capacity (CT_i) and Total Outdoor Unit Capacity (CT_o)

$CT_i = 10.3 < CT_o = 11.8$, thus, select CT_i.

$CT_{max} = CT_i = 10.3$ kW

(7) Comparison with Essential Load

Against the essential load 10.3 kW, the maximum system capacity is 10.3 kW: Proper indoor units have been selected.

(8) Calculation of Maximum Indoor Unit Capacity of Each Room

$CT_{max} = CT_i$, thus, calculate by the calculation below

Room1

Indoor Unit Rating × Indoor Design Temperature Correction

= 5.0 × 0.96

= 4.8 kW **OK: fulfills the load 4.8 kW**

Room2

Indoor Unit Rating × Indoor Design Temperature Correction

= 6.3× 0.88

= 5.5 kW **OK: fulfills the load 5.5 kW**

Table 1 Table of correction factor at frost and defrost

Outdoor inlet air temp. °C W.B.	6	4	2	0	−2	−4	−6	−8	−10	−15	−20
PUMY-P112,125,140VKM5	1.0	0.98	0.89	0.88	0.89	0.90	0.95	0.95	0.95	0.95	0.95
PUMY-P112,125,140YKM(E)4	1.0	0.98	0.89	0.88	0.89	0.90	0.95	0.95	0.95	0.95	0.95

Note: If $CT_{max} = CT_o$, please refer to the <Cooling> section to calculate the Maximum Indoor Unit Capacity of Each Room.
Completed selecting units since the selected units fulfill the heating loads of Room 1, 2.

3. Power input of outdoor unit

<Cooling>

(1) Rated power input of outdoor unit **2.79 kW**

(2) Calculation of the average indoor temperature power input coefficient

Coefficient of the outdoor unit for indoor unit 1 (Outdoor temp. 40.5 °CD.B., Indoor temp. 20 °CW.B.)
0.82

Coefficient of the outdoor unit for indoor unit 2 (Outdoor temp. 40.5 °CD.B., Indoor temp. 22 °CW.B.)
0.76

Average indoor temp. power input coefficient (C_{ave}) = $\sum_{k=1}^{n} \{c_k \times (M_k / \sum_{k=1}^{n} M_k)\}$

n: Total number of the indoor units
k: Number of the indoor unit
c_k: Outdoor unit power input coefficient of k indoor unit room temp.
M_k: Number part of the k indoor unit model (e.g. P80 → 80)

= 0.82 × 40/(40 + 50) + 0.76 × 50/(40 + 50)
= 0.79

(3) No need to consider Coefficient of the partial load f(CTi) **-**

(4) Outdoor power input (PI_o)

Maximum System Capacity (CT_{max}) = Total Outdoor unit Capacity (CT_o), so use the following formula
PI_o = Outdoor unit Cooling Rated Power Input × C_{ave}
= 2.79 × 0.79
= 2.20 kW

<Heating>

(1) Rated power input of outdoor unit **3.04 kW**

(2) Calculation of the average indoor temperature power input coefficient

Coefficient of the outdoor unit for indoor unit 1 (Outdoor temp. 2 °CW.B., Indoor temp. 21 °CD.B.)
1.12

Coefficient of the outdoor unit for indoor unit 2 (Outdoor temp. 2 °CW.B., Indoor temp. 22 °CD.B.)
1.0

Average indoor temp. power input coefficient (C_{ave}) = $\sum_{k=1}^{n} \{c_k \times (M_k / \sum_{k=1}^{n} M_k)\}$

n: Total number of the indoor units
k: Number of the indoor unit
c_k: Outdoor unit power input coefficient of k indoor unit room temp.
M_k: Number part of the k indoor unit model (e.g. P80 → 80)

= 1.12 × 40/(40 + 50) + 1.0 × 50/(40 + 50)
= 1.05

(3) Coefficient of the partial load f (CT_i) **0.89**

(4) Outdoor power input (PI_o)

Maximum System Capacity (CT_{max}) = Total Indoor unit Capacity (CT_i), so use the following formula
PI_o = Outdoor unit Heating Rated Power Input × C_{ave} × f (CT_i)
= 3.04 × 1.05 × 0.89
= 2.84 kW

7-2. Correction by temperature

CITY MULTI could have varied capacity at different designing temperature. Using the nominal cooling/heating capacity value and the ratio below, the capacity can be observed at various temperature.

<Cooling>

PUMY-		P112VKM5	P125VKM5	P140VKM5
Nominal Cooling Capacity	kW	12.5	14.0	15.5
	BTU/h	42,650	47,768	52,886
Input	kW	2.79	3.46	4.52

PUMY-		P112YKM(E)4	P125YKM(E)4	P140YKM(E)4
Nominal Cooling Capacity	kW	12.5	14.0	15.5
	BTU/h	42,650	47,768	52,886
Input	kW	2.79	3.46	4.52

Indoor unit temperature correction

To be used to correct indoor unit capacity only

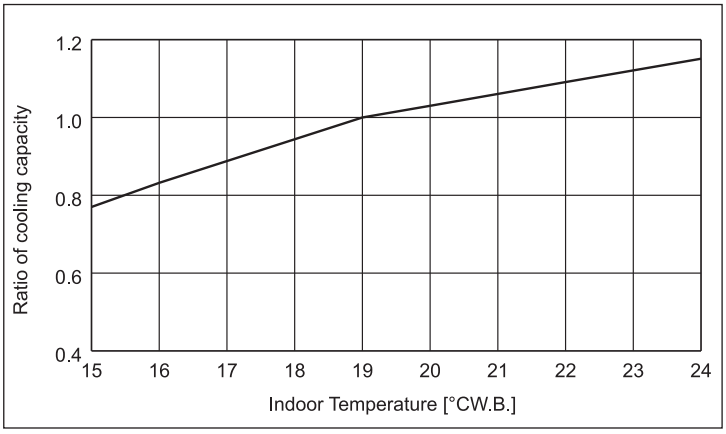

Outdoor unit temperature correction

To be used to correct outdoor unit only

Outdoor unit capacity is NOT affected by the indoor temperature.
Outdoor unit power input is affected by the indoor and outdoor temperatures. Please consult the sales office for details.

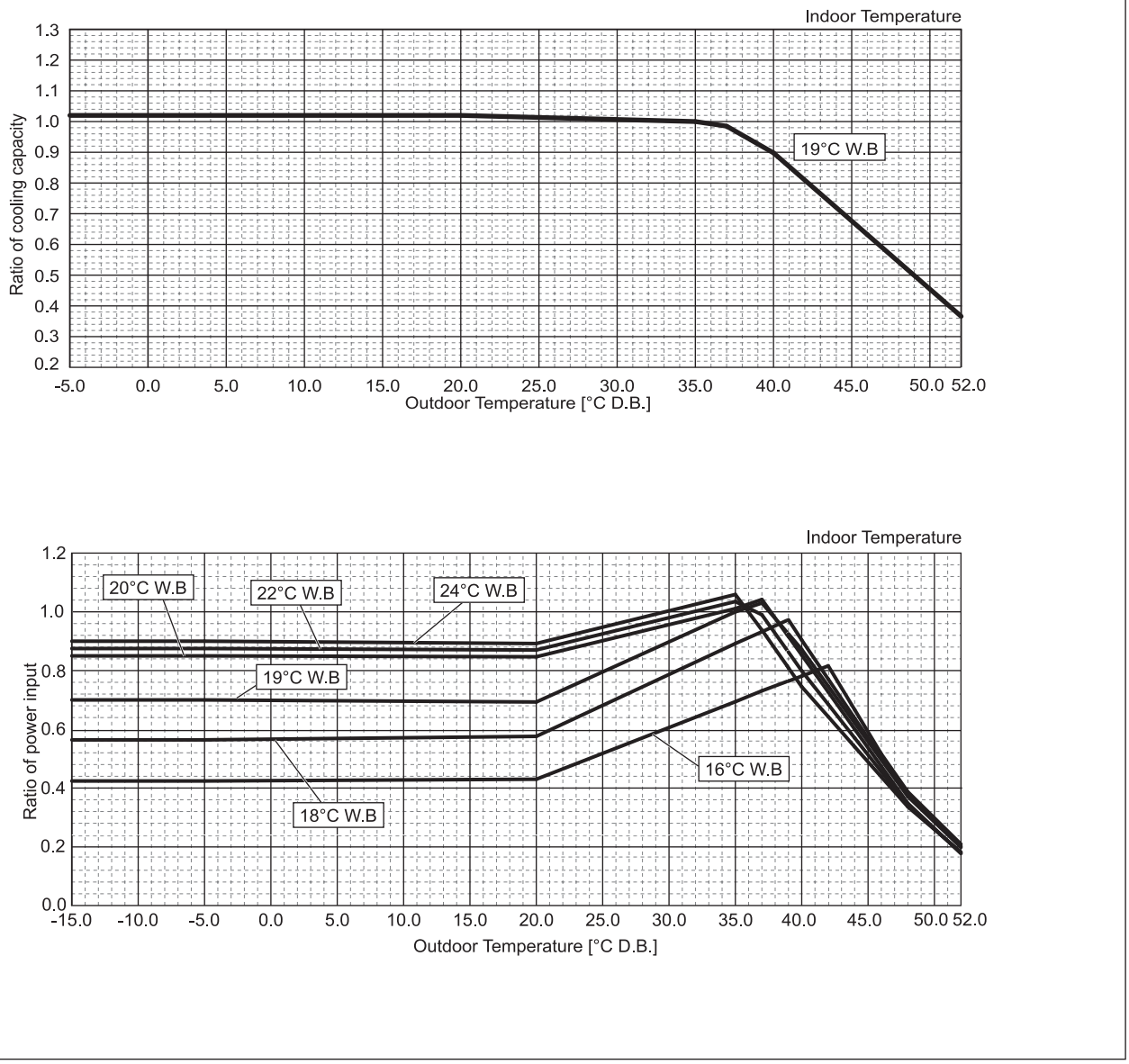

<Heating>

PUMY-		P112VKM5	P125VKM5	P140VKM5
Nominal Heating Capacity	kW	14.0	16.0	18.0
	BTU/h	47,768	54,592	61,416
Input	kW	3.04	3.74	4.47

PUMY-		P112YKM(E)4	P125YKM(E)4	P140YKM(E)4
Nominal Heating Capacity	kW	14.0	16.0	18.0
	BTU/h	47,768	54,592	61,416
Input	kW	3.04	3.74	4.47

Indoor unit temperature correction

To be used to correct indoor unit capacity only

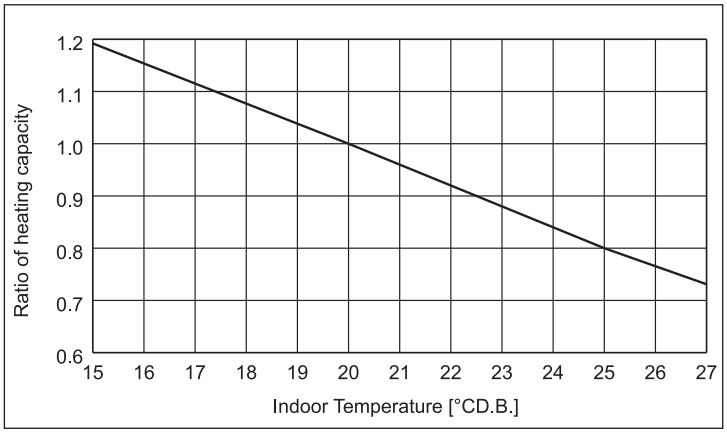

Outdoor unit temperature correction

To be used to correct outdoor unit only

Outdoor unit capacity is NOT affected by the indoor temperature.
Outdoor unit power input is affected by the indoor and outdoor temperatures. Please consult the sales office for details.

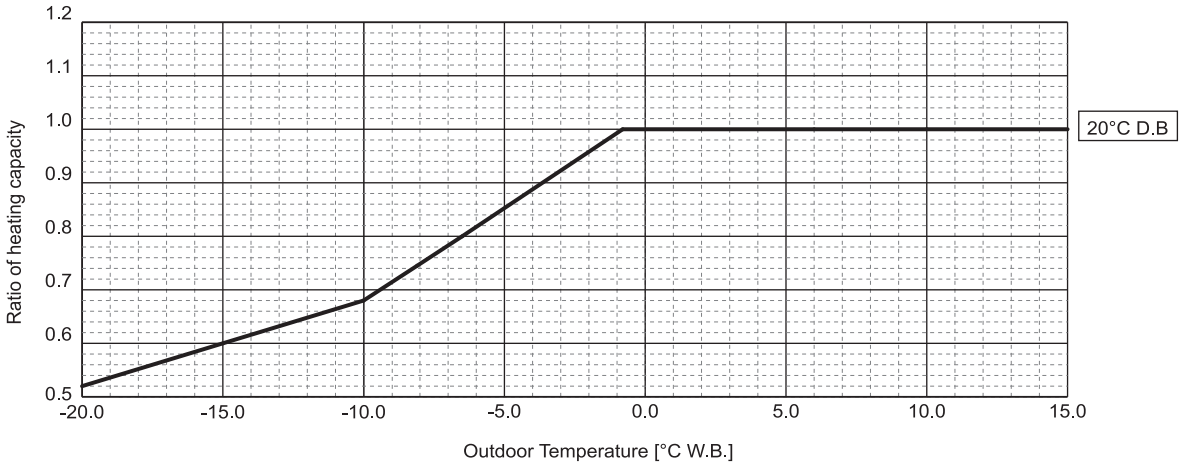

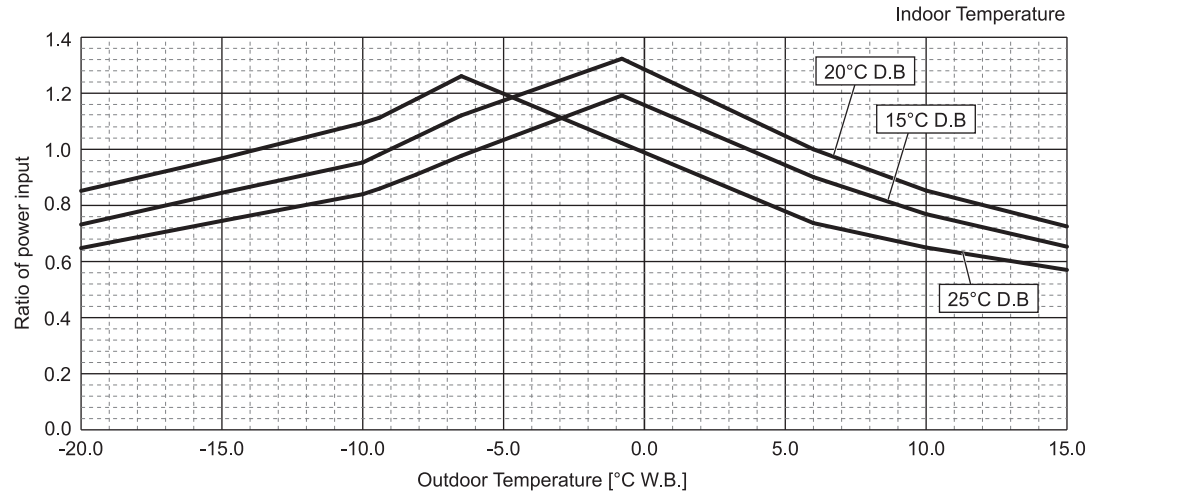

<Cooling>

PUMY-		P200YKM2
Nominal Cooling Capacity	kW	22.4
	BTU/h	76,400
Input	kW	6.05

Indoor unit temperature correction

To be used to correct indoor unit capacity only

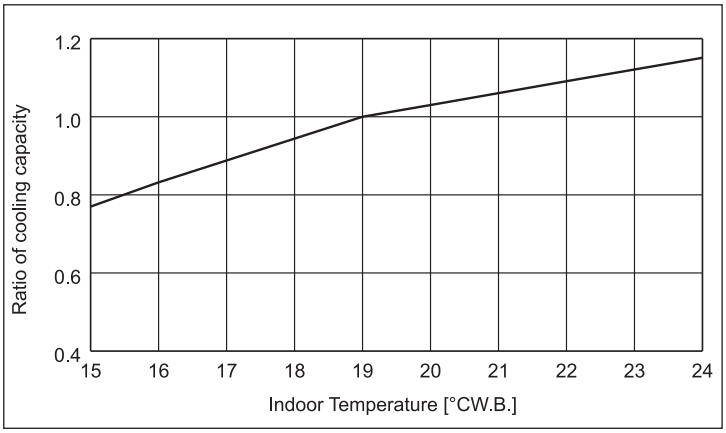

Outdoor unit temperature correction

To be used to correct outdoor unit only

Outdoor unit capacity is NOT affected by the indoor temperature.
Outdoor unit power input is affected by the indoor and outdoor temperatures. Please consult the sales office for details.

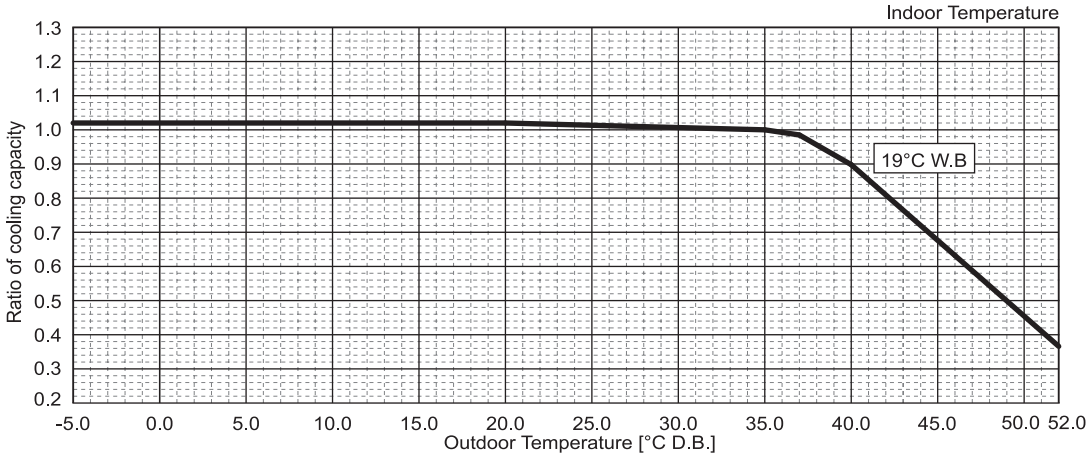

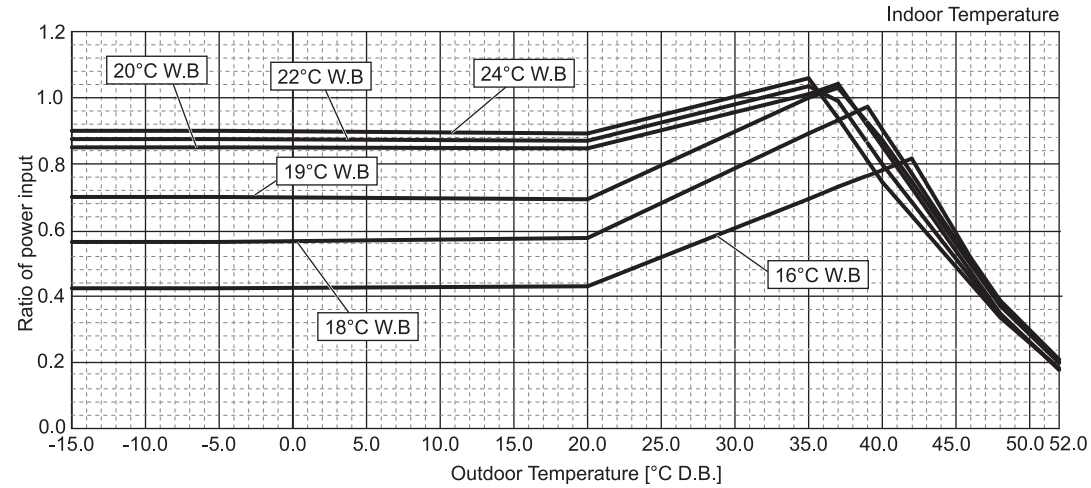

<Heating>

PUMY-		P200YKM2
Nominal Heating Capacity	kW	25.0
	BTU/h	85,300
Input	kW	5.84

Indoor unit temperature correction

To be used to correct indoor unit capacity only

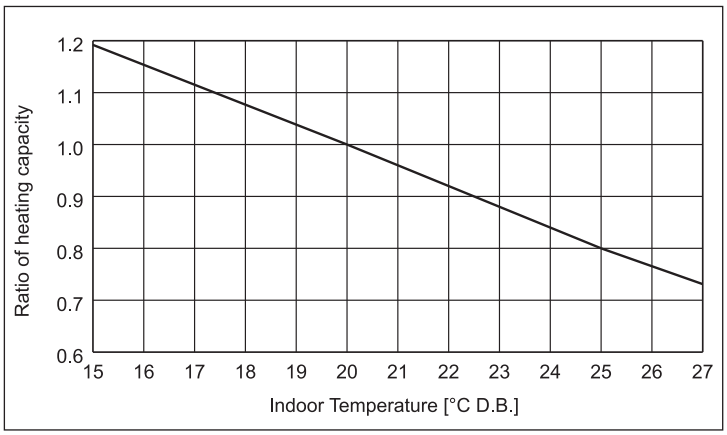

Outdoor unit temperature correction

To be used to correct outdoor unit only

Outdoor unit capacity is NOT affected by the indoor temperature.
Outdoor unit power input is affected by the indoor and outdoor temperatures. Please consult the sales office for details.

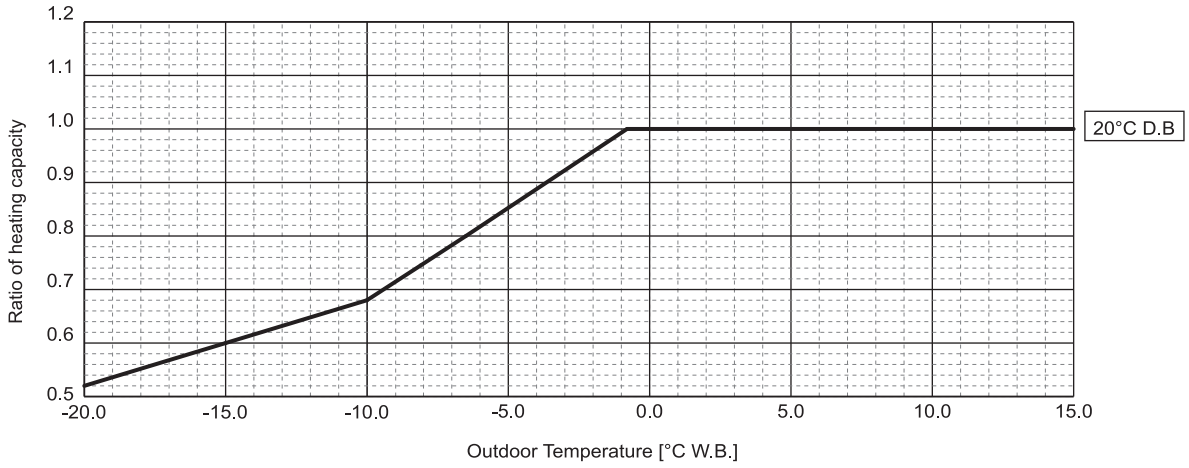

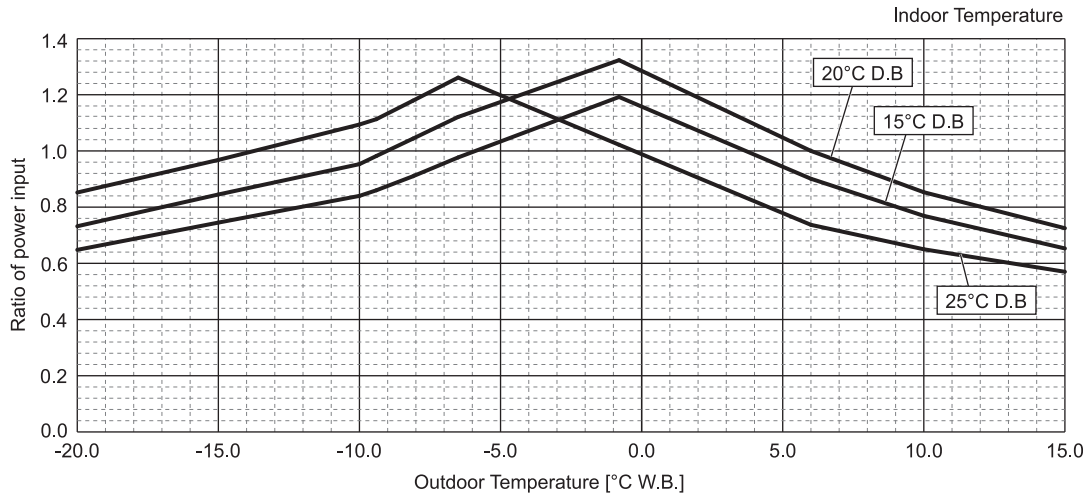

7-3. Correction by total indoor

CITY MULTI system has different capacities and inputs when many combinations of indoor units with different total capacities are connected. Using following tables, the maximum capacity can be found to ensure the system is installed with enough capacity for a particular application.

PUMY-P112VKM5/YKM(E)4		
Nominal Cooling Capacity	kW	12.5
	BTU/h	42,650
Input	kW	2.79

PUMY-P112VKM5/YKM(E)4		
Nominal Heating Capacity	kW	14.0
	BTU/h	47,768
Input	kW	3.04

PUMY-P112VKM5/YKM(E)4

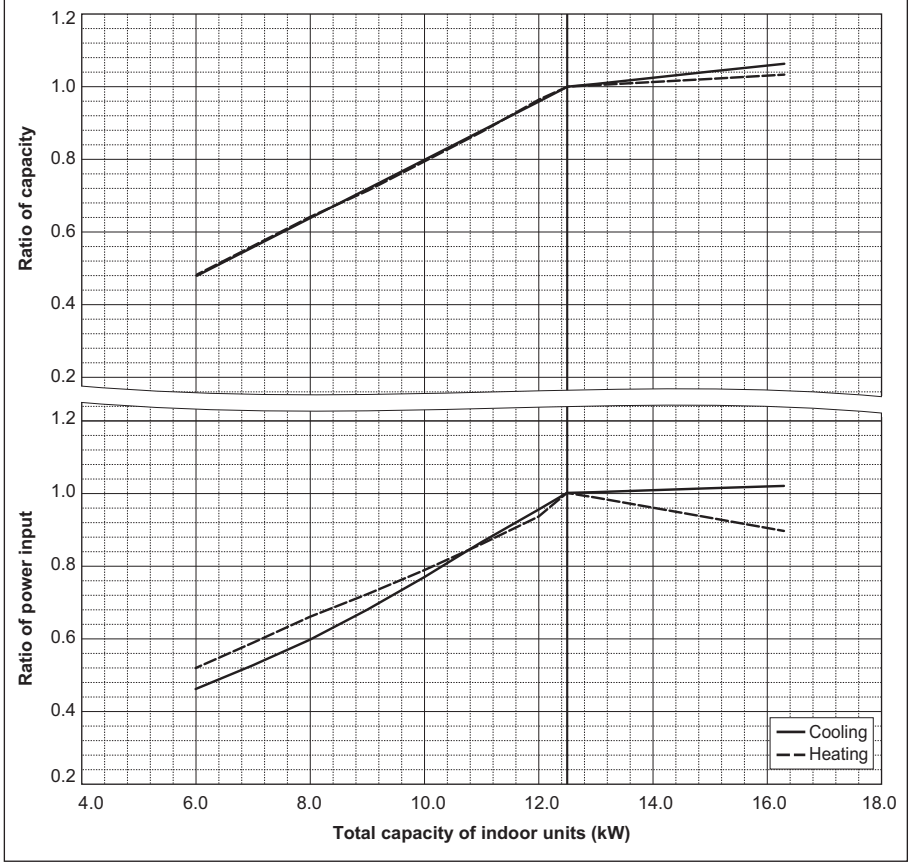

PUMY-P125VKM5/YKM(E)4		
Nominal Cooling Capacity	kW	14.0
	BTU/h	47,768
Input	kW	3.46

PUMY-P125VKM5/YKM(E)4		
Nominal Heating Capacity	kW	16.0
	BTU/h	54,592
Input	kW	3.74

PUMY-P125VKM5/YKM(E)4

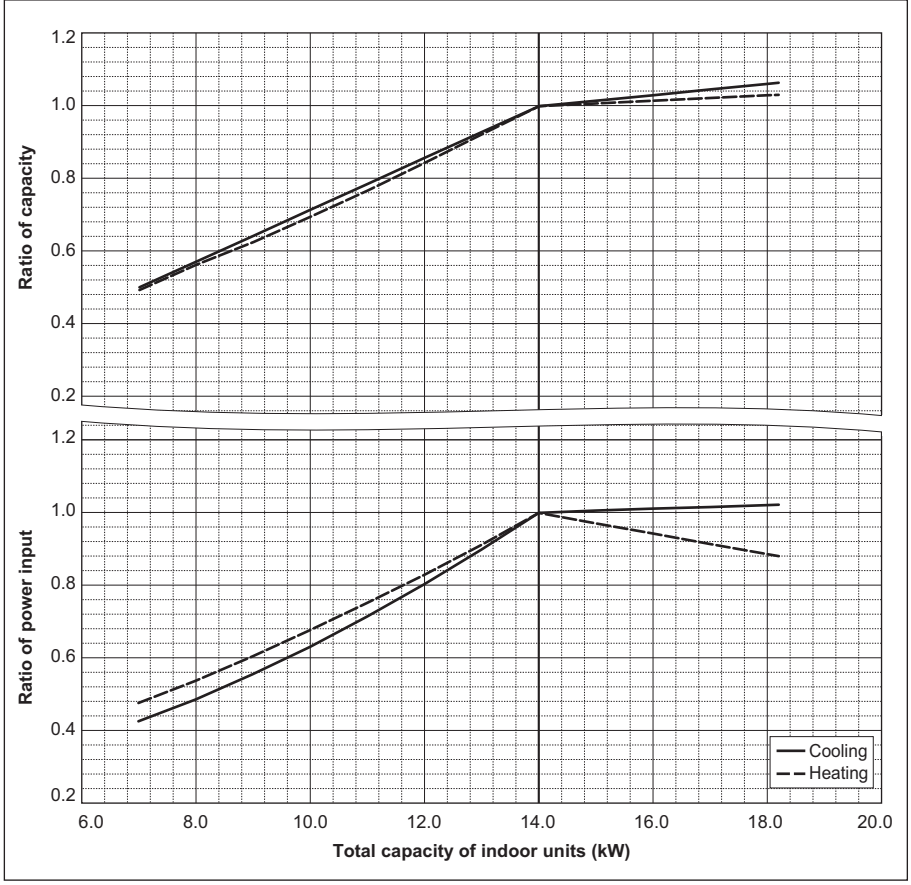

PUMY-P140VKM5/YKM(E)4		
Nominal Cooling Capacity	kW	15.5
	BTU/h	52,886
Input	kW	4.52

PUMY-P140VKM5/YKM(E)4		
Nominal Heating Capacity	kW	18.0
	BTU/h	61,416
Input	kW	4.47

PUMY-P140VKM5/YKM(E)4

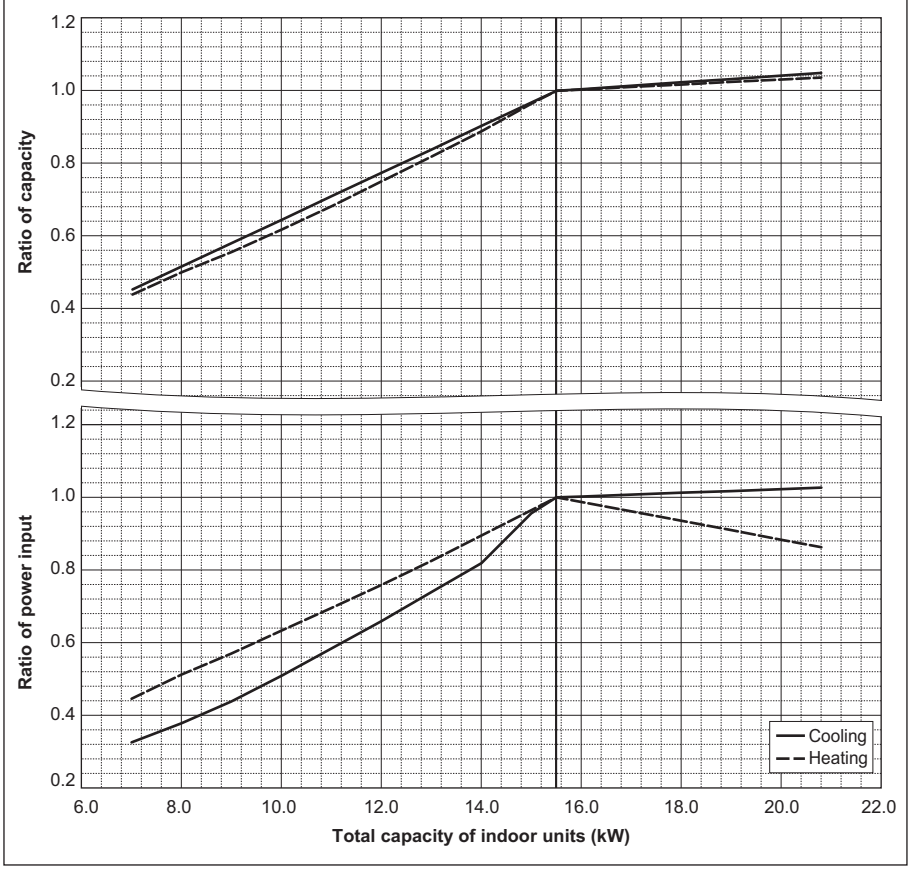

PUMY-P200YKM2		
Nominal Cooling Capacity	kW	22.4
	BTU/h	76,400
Input	kW	6.05

PUMY-P200YKM2		
Nominal Heating Capacity	kW	25.0
	BTU/h	85,300
Input	kW	5.84

PUMY-P200YKM2

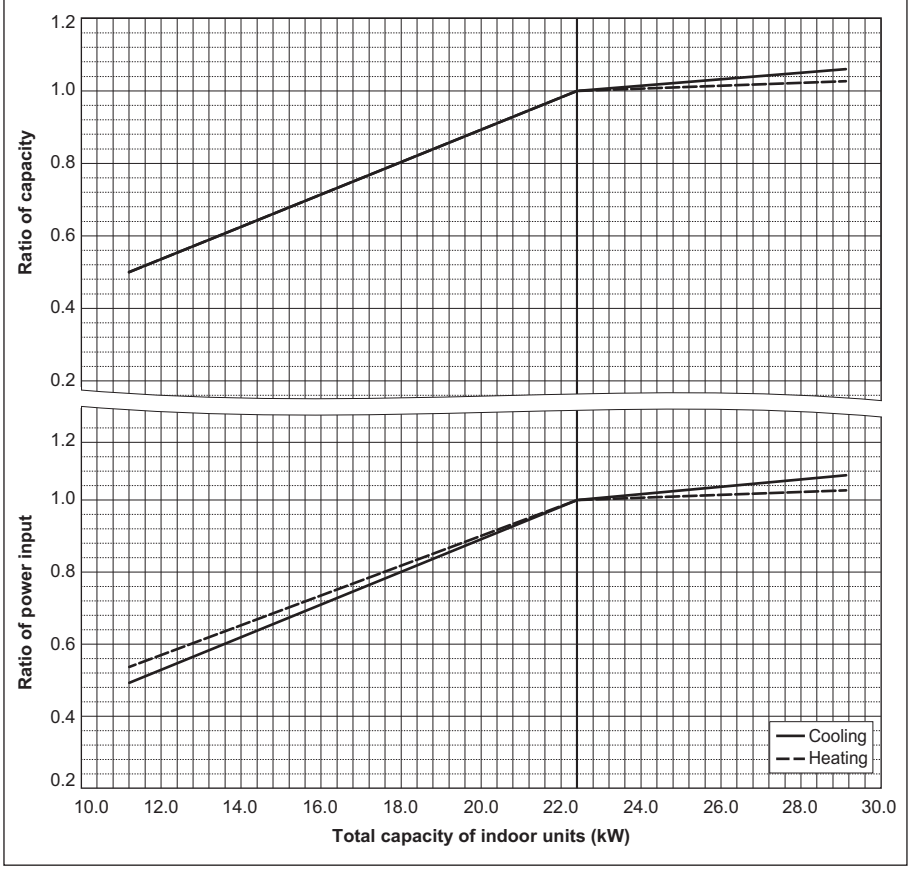

7-4. Correction by refrigerant piping length

CITY MULTI systems can have extended piping lengths if certain limitations are followed, but cooling/heating capacity could be reduced. Using following correction factor by equivalent piping length shown at 7-4-1 and 7-4-2, capacity can be found.
7-4-3 shows how to obtain the equivalent piping length.

7-4-1. Cooling capacity correction

PUMY-P112VKM5, YKM(E)4

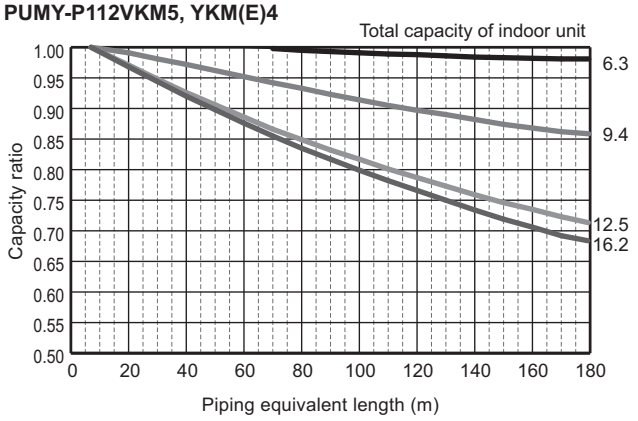

PUMY-P140VKM5, YKM(E)4

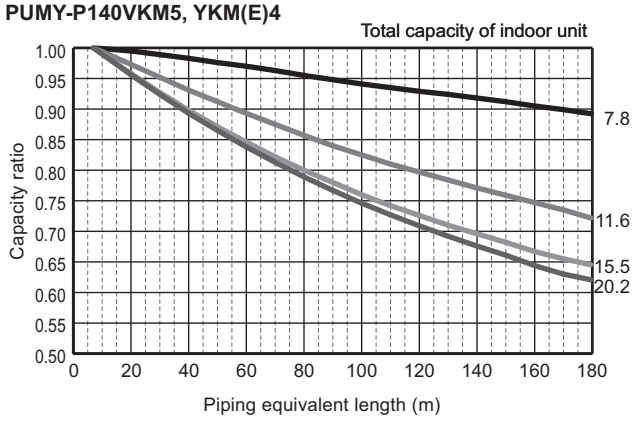

PUMY-P125VKM5, YKM(E)4

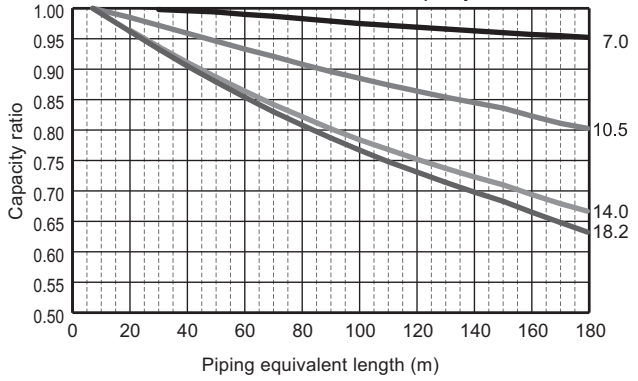

PUMY-P200YKM2

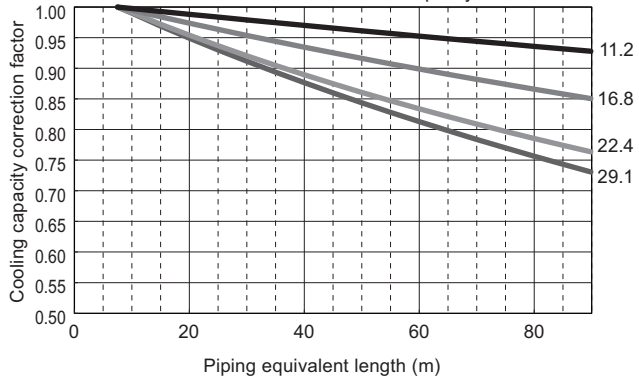

7-4-2. Heating capacity correction

PUMY-P112, 125, 140VKM5, YKM(E)4

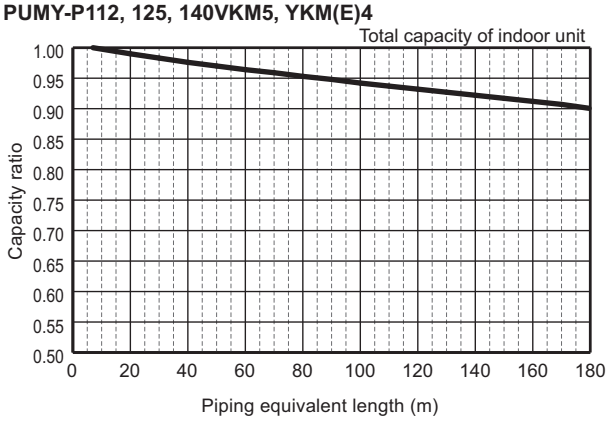

PUMY-P200YKM2

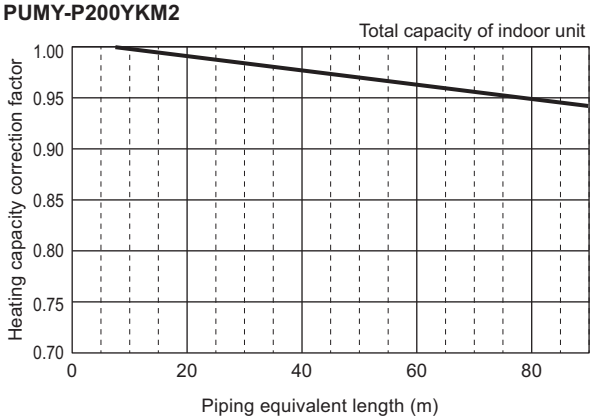

7-4-3. How to obtain the equivalent piping length

Equivalent length = (Actual piping length to the farthest indoor unit) + (0.30 x number of bends on the piping) m

7-5. Correction at frost and defrost

Due to frost at the outdoor heat exchanger and the automatical defrosting operation, the heating capacity of the outdoor unit should be considered by multiplying the correction factor which shown in the table below.

Table of correction factor at frosting and defrosting

Outdoor inlet air temp. °C W.B.	6	4	2	0	-2	-4	-6	-8	-10	-15	-20
Outdoor inlet air temp. °F W.B.	43	39	36	32	28	25	21	18	14	-5	-4
PUMY-P112,125,140VKM5	1.0	0.98	0.89	0.88	0.89	0.90	0.95	0.95	0.95	0.95	0.95
PUMY-P112,125,140YKM(E)4	1.0	0.98	0.89	0.88	0.89	0.90	0.95	0.95	0.95	0.95	0.95
PUMY-P200YKM2	1.0	0.98	0.89	0.88	0.89	0.90	0.95	0.95	0.95	0.95	0.95

8-1. JOINT

CITY MULTI units can be easily connected by using Joint sets and Header sets provided by Mitsubishi Electric.
Refer to section "Piping Design" or the Installation Manual that comes with the Joint set for how to install the Joint set.

CMY-Y62-G-E

Unit: mm

1. Specification

Items		Details
Main	Number of ports	2 ports
	Number of branch joints	One for each liquid and gas pipe
	Pipe material	Phosphorus deoxidized copper C1220T-OL (JIS H3300)
Accessory	Insulation material	Foamed polyethylene (one for each liquid and gas pipe)
	Reducer	10 reducers of 7 types (Refer to the external drawing for details.)

2. External drawing

For liquid pipe:

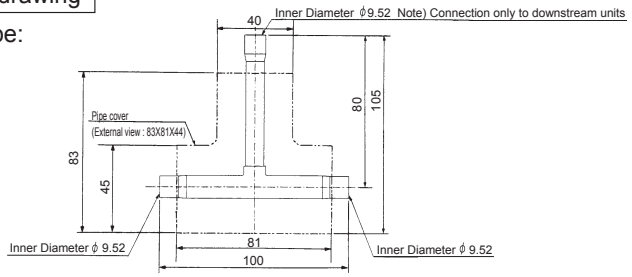

Reducer (Accessory):

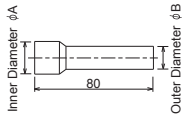

A (Inner Diameter)	B (Outer Diameter)	Number of reducers
ϕ 12.7	ϕ 9.52	2
ϕ 19.05	ϕ 15.88	1
ϕ 22.22	ϕ 19.05	1

For gas pipe:

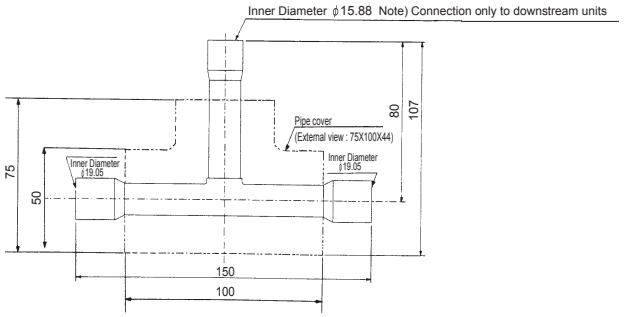

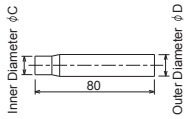

C (Inner Diameter)	D (Outer Diameter)	Number of reducers
ϕ 6.35	ϕ 9.52	2
ϕ 12.7	ϕ 15.88	1
ϕ 12.7	ϕ 19.05	1
ϕ 15.88	ϕ 19.05	2

8-2. HEADER

CITY MULTI units can be easily connected by using Joint sets and Header sets provided by Mitsubishi Electric.
Refer to section "Piping Design" or the Installation Manual that comes with the Header set for how to install the Header set.

CMY-Y64-G-E

Unit: mm

1. Specification

Items		Details
Main	Number of ports	3 ~ 4 ports
	Number of branch joints	One for each liquid and gas pipe
	Pipe material	Phosphorus deoxidized copper C1220T-OL (JIS H3300)
Accessory	Insulation material	Foamed polyethylene
	Reducer	7 reducers of 5 types
	Cap	2 caps of 2 different types for each liquid and gas pipe 4 caps in total

2. External drawing

For liquid pipe:

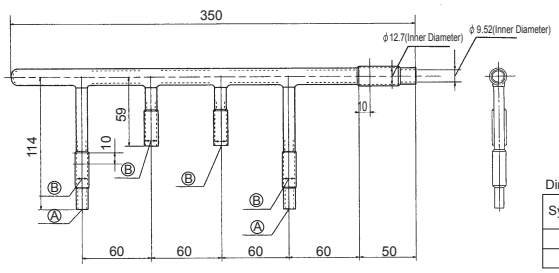

Dimension table

Symbol	Inner Diameter (mm)
Ⓐ	ϕ 6.35
Ⓑ	ϕ 9.52

Reducer (Accessory):

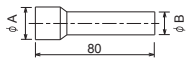

A (Inner Diameter)	B (Outer Diameter)	Number of reducers
ϕ 19.05	ϕ 15.88	1
ϕ 15.88	ϕ 12.7	2
ϕ 9.52	ϕ 6.35	2

For gas pipe:

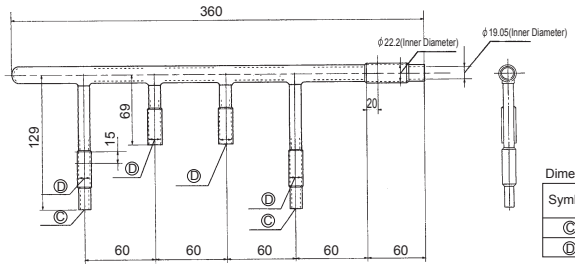

Dimension table

Symbol	Inner Diameter (mm)
Ⓒ	ϕ 12.7
Ⓓ	ϕ 15.88

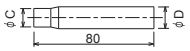

C (Inner Diameter)	D (Outer Diameter)	Number of reducers
ϕ 15.88	ϕ 19.05	1
ϕ 9.52	ϕ 12.7	1

CMY-Y68-G-E

Unit: mm

1. Specification

Items		Details
Main	Number of ports	5 ~ 8 ports
	Number of branch joints	One for each liquid and gas pipe
	Pipe material	Phosphorus deoxidized copper C1220T-OL (JIS H3300)
Accessory	Insulation material	Foamed polyethylene
	Reducer	3 reducers of 3 types
	Cap	3 caps for each liquid and gas pipe 6 in total

2. External drawing

For liquid pipe:

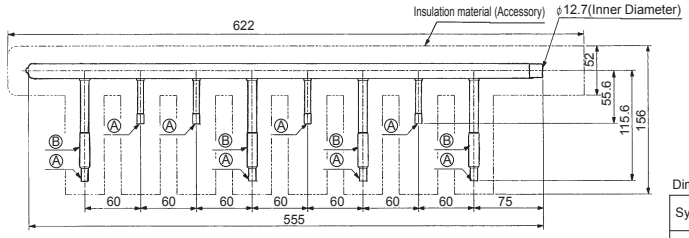

Dimension table

Symbol	Inner Diameter (mm)
Ⓐ	ϕ 6.35
Ⓑ	ϕ 9.52

Reducer (Accessory):

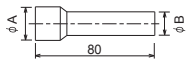

A (Inner Diameter)	B (Outer Diameter)	Number of reducers
ϕ 19.05	ϕ 15.88	1
ϕ 12.7	ϕ 9.52	1

For gas pipe:

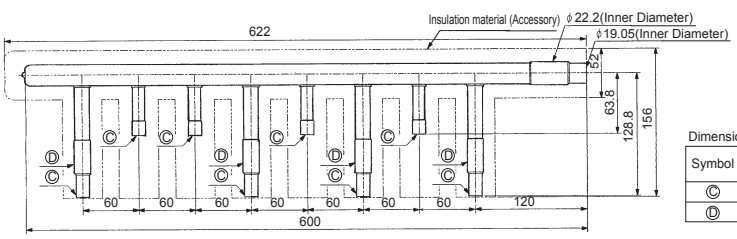

Dimension table

Symbol	Inner Diameter (mm)
Ⓒ	ϕ 12.7
Ⓓ	ϕ 15.88

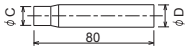

C (Inner Diameter)	D (Outer Diameter)	Number of reducers
ϕ 15.88	ϕ 19.05	1

8-3. BRANCH BOX

PUMY-P112/125/140VKM5, PUMY-P112/125/140YKM(E)4, and PUMY-P200YKM2 units can be easily connected to M, S, P series indoor units by using Branch box provided by Mitsubishi Electric. Refer to section "Piping Design" or the Installation Manual that comes with the Branch box for how to install the Branch box.

(1) PAC-MK34/54BC

These can connect to PUMY-P112/125/140VKM5, PUMY-P112/125/140YKM(E)4 and PUMY-P200YKM2.

PAC-MK34BC

mm

1. Specification

Model Name				PAC-MK34BC
Connectable number of indoor units				Maximum 3
Power supply (from outdoor unit)				Single phase, 220/230/240V, 50Hz, Single phase, 220V, 60Hz
Input			kW	0.003
Running current			A	0.05 (Max. 6)
External finish				Galvanized sheets
Dimensions	Width		mm	450
	Depth		mm	280
	Height		mm	170
Weight			kg	6.7
Piping connection (Flare)	Branch (indoor side)	Liquid	mm	ø6.35 × 3 {A,B,C}
		Gas	mm	ø9.52 × 3 {A,B,C}
	Main (outdoor side)	Liquid	mm	ø9.52
		Gas	mm	ø15.88

* The piping connection size differs according to the type and capacity of outdoor/indoor units. Match the piping connection size of branch box with outdoor/indoor unit. If the piping connection size of branch box does not match the piping connection size of outdoor/indoor unit, use optional different-diameter (deformed) joints to the branch box side. (Connect deformed joint directly to the branch box side.)

2. External drawing

SUSPENSION BOLT : W3/8(M10)

REFRIGERANT PIPE BRAZED CONNECTION

	A	B	C			TO OUTDOOR UNIT
LIQUID PIPE	ϕ6.35	ϕ6.35	ϕ6.35			ϕ9.52
GAS PIPE	ϕ9.52	ϕ9.52	ϕ9.52			ϕ15.88

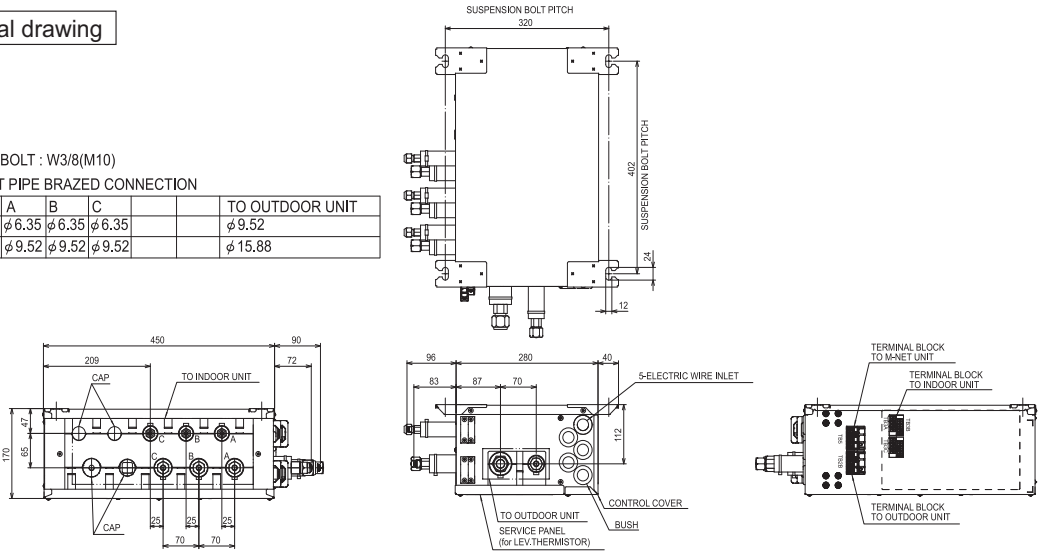

PAC-MK54BC

mm

1. Specification

Model Name				PAC-MK54BC
Connectable number of indoor units				Maximum 5
Power supply (from outdoor unit)				Single phase, 220/230/240V, 50Hz, Single phase, 220V, 60Hz
Input			kW	0.003
Running current			A	0.05 (Max. 6)
External finish				Galvanized sheets
Dimensions	Width		mm	450
	Depth		mm	280
	Height		mm	170
Weight			kg	7.4
Piping connection (Flare)	Branch (indoor side)*	Liquid	mm	ø6.35 × 5 {A,B,C,D, E}
		Gas	mm	ø9.52 × 4 {A,B,C,D}, ø12.7 × 1 {E}
	Main (outdoor side)	Liquid	mm	ø9.52
		Gas	mm	ø15.88

* The piping connection size differs according to the type and capacity of outdoor/indoor units. Match the piping connection size of branch box with outdoor/indoor unit. If the piping connection size of branch box does not match the piping connection size of outdoor/indoor unit, use optional different-diameter (deformed) joints to the branch box side. (Connect deformed joint directly to the branch box side.)

2. External drawing

SUSPENSION BOLT : W3/8(M10)

REFRIGERANT PIPE BRAZED CONNECTION

	A	B	C	D	E	TO OUTDOOR UNIT
LIQUID PIPE	ϕ6.35	ϕ6.35	ϕ6.35	ϕ6.35	ϕ6.35	ϕ9.52
GAS PIPE	ϕ9.52	ϕ9.52	ϕ9.52	ϕ9.52	ϕ12.7	ϕ15.88

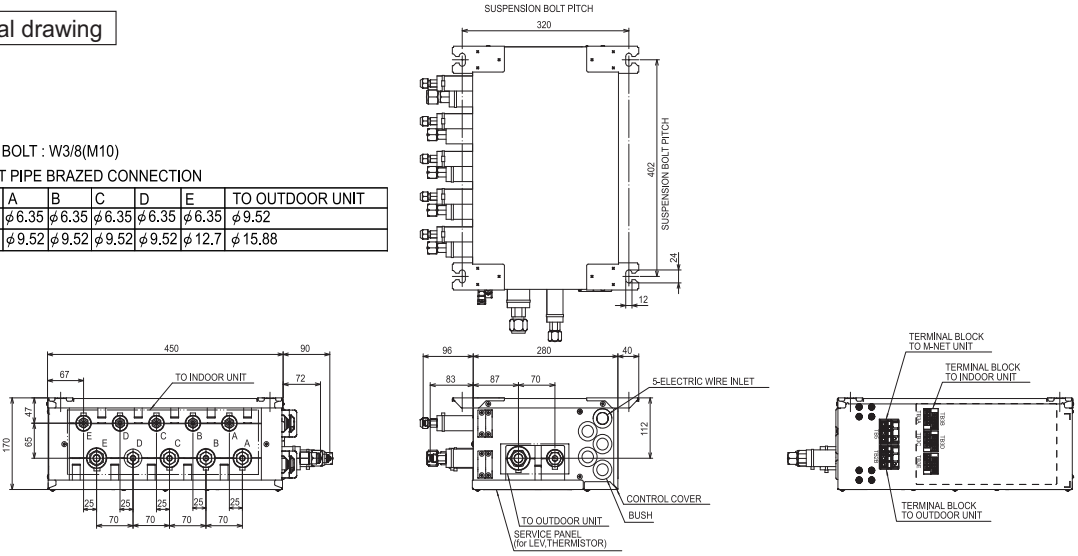

9-1. General cautions

① Follow ordinance of your governmental organization for technical standard related to electrical equipment, wiring regulations, and guidance of each electric power company.
② Wiring for control (hereinafter referred to as transmission cable) shall be (50mm[1-5/8in.] or more) apart from power source wiring so that it is not influenced by electric noise from power source wiring. (Do not insert transmission cable and power source wire in the same conduit.)
③ Be sure to provide designated grounding work to outdoor unit.
④ Give some allowance to wiring for electrical part box of indoor and outdoor units, because the box is sometimes removed at the time of service work.
⑤ Never connect 380~415V(220~240V) power source to terminal block of transmission cable. If connected,electrical parts will be damaged.
⑥ Use 2-core shield cable for transmission cable. If transmission cables of different systems are wired with the same multiple-core cable, the resultant poor transmitting and receiving will cause erroneous operations.
⑦ When extending the transmission line, make sure to extend the shield cable as well.

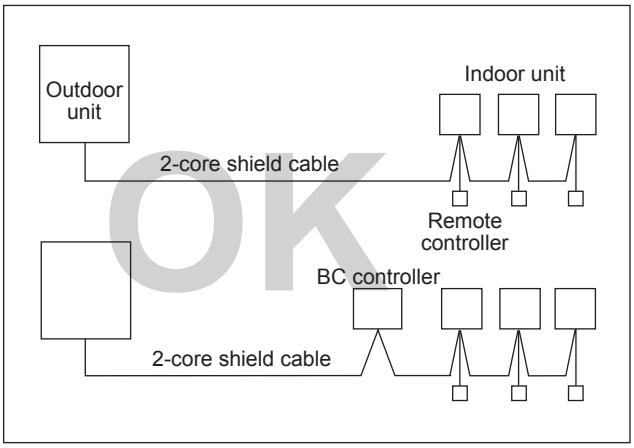

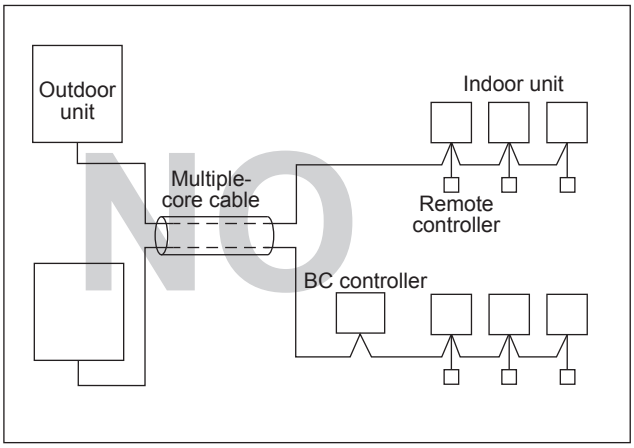

9-2. Power supply for Outdoor unit

9-2-1. Electrical characteristics of Outdoor unit at cooling mode

Symbols: MCA (Max Circuit Amps =1.25 × Temperature correction × RLA)
RLA (Rated Load Amps), SC (Starting Current)

PUMY-P-VKM	Units			Power supply	Compressor		FAN	RLA (A)
	Hz	Volts	Voltage Range	MCA (A)	Output (kW)	SC (A)	Output (kW)	
PUMY-P112VKM5	50	220 230 240	Max.: 264V Min.: 198V	29.5	2.9	14	0.074+0.074	12.87/12.32/11.80
PUMY-P125VKM5				29.5	3.5	14	0.074+0.074	15.97/15.27/14.64
PUMY-P140VKM5				29.5	3.9	14	0.074+0.074	20.86/19.95/19.12

PUMY-P-VKM	Units			Power supply	Compressor		FAN	RLA (A)
	Hz	Volts	Voltage Range	MCA (A)	Output (kW)	SC (A)	Output (kW)	
PUMY-P112VKM5	60	220 230	Max.: 253V Min.: 198V	29.5	2.9	14	0.074+0.074	12.87/12.32
PUMY-P125VKM5				29.5	3.5	14	0.074+0.074	15.97/15.27
PUMY-P140VKM5				29.5	3.9	14	0.074+0.074	20.86/19.95

PUMY-P-YKM	Units			Power supply	Compressor		FAN	RLA (A)
	Hz	Volts	Voltage Range	MCA (A)	Output (kW)	SC (A)	Output (kW)	
PUMY-P112YKM4	50	380 400 415	Max.: 456V Min.: 342V	13.0	2.9	7	0.074+0.074	4.99/4.74/4.57
PUMY-P125YKM4				13.0	3.5	7	0.074+0.074	5.84/5.55/5.35
PUMY-P140YKM4				13.0	3.9	7	0.074+0.074	7.23/6.87/6.62
PUMY-P200YKM2				19.0	5.3	7	0.20+0.20	9.88/9.39/9/05

PUMY-P-YKM	Units			Power supply	Compressor		FAN	RLA (A)
	Hz	Volts	Voltage Range	MCA (A)	Output (kW)	SC (A)	Output (kW)	
PUMY-P112YKM4	60	380	Max.: 418V Min.: 342V	13.0	2.9	7	0.074+0.074	4.99
PUMY-P125YKM4				13.0	3.5	7	0.074+0.074	5.84
PUMY-P140YKM4				13.0	3.9	7	0.074+0.074	7.23

PUMY-P-YKME	Units			Power supply	Compressor		FAN	RLA (A)
	Hz	Volts	Voltage Range	MCA (A)	Output (kW)	SC (A)	Output (kW)	
PUMY-P112YKME4	50	380 400 415	Max.: 456V Min.: 342V	13.0	2.9	7	0.074+0.074	4.99/4.74/4.57
PUMY-P125YKME4				13.0	3.5	7	0.074+0.074	5.84/5.55/5.35
PUMY-P140YKME4				13.0	3.9	7	0.074+0.074	7.23/6.87/6.62

9-3. Power cable specifications

Thickness of wire for main power supply, capacities of the switch and system impedance

■ PUMY-P-VKM5/PUMY-P-YKM4/PUMY-P-YKME4

<Outdoor unit> When power is supplied to outdoor unit and branch box separately

	Model	Minimum wire thickness (mm^2)		Ground-fault interrupter *1	Local switch (A)		Breaker for wiring (A) (Non-fuse breaker)	Max. Permissive System Impedance
		Main cable	Ground		Capacity	Fuse		
Outdoor unit	PUMY-P112VKM5	6.0	6.0	32A 30mA 0.1sec. or less	32	32	32	-
	PUMY-P125VKM5	6.0	6.0	32A 30mA 0.1sec. or less	32	32	32	-
	PUMY-P140VKM5	6.0	6.0	32A 30mA 0.1sec. or less	32	32	32	-
	PUMY-P112YKM4	1.5	1.5	16A 30mA 0.1sec. or less	16	16	16	-
	PUMY-P125YKM4	1.5	1.5	16A 30mA 0.1sec. or less	16	16	16	-
	PUMY-P140YKM4	1.5	1.5	16A 30mA 0.1sec. or less	16	16	16	-
	PUMY-P112YKME4	1.5	1.5	16A 30mA 0.1sec. or less	16	16	16	-
	PUMY-P125YKME4	1.5	1.5	16A 30mA 0.1sec. or less	16	16	16	-
	PUMY-P140YKME4	1.5	1.5	16A 30mA 0.1sec. or less	16	16	16	-

<Outdoor unit> When power is supplied to branch box from the outdoor unit

	Model	Minimum wire thickness (mm^2)		Ground-fault interrupter *1	Local switch (A)		Breaker for wiring (A) (Non-fuse breaker)	Max. Permissive System Impedance
		Main cable	Ground		Capacity	Fuse		
Outdoor unit	PUMY-P112VKM5	6.0	6.0	40A 30mA 0.1sec. or less	40	40	40	-
	PUMY-P125VKM5	6.0	6.0	40A 30mA 0.1sec. or less	40	40	40	-
	PUMY-P140VKM5	6.0	6.0	40A 30mA 0.1sec. or less	40	40	40	-
	PUMY-P112YKM4	2.5	2.5	32A 30mA 0.1sec. or less	20	20	20	-
	PUMY-P125YKM4	2.5	2.5	32A 30mA 0.1sec. or less	20	20	20	-
	PUMY-P140YKM4	2.5	2.5	32A 30mA 0.1sec. or less	20	20	20	-
	PUMY-P112YKME4	2.5	2.5	32A 30mA 0.1sec. or less	20	20	20	-
	PUMY-P125YKME4	2.5	2.5	32A 30mA 0.1sec. or less	20	20	20	-
	PUMY-P140YKME4	2.5	2.5	32A 30mA 0.1sec. or less	20	20	20	-

<Indoor units> When power is supplied to indoor unit and outdoor unit separately

	Model	Minimum wire thickness (mm^2)			Ground-fault interrupter *1	Local switch (A)		Breaker for wiring (A) (Non-fuse breaker)	Max. Permissive System Impedance
		Main cable	Branch	Ground		Capacity	Fuse		
Total operating current of the indoor unit	F0 = 16A or less *2	1.5	1.5	1.5	20A current sensitivity *4	16	16	20	-
	F0 = 25A or less *2	2.5	2.5	2.5	30A current sensitivity *4	25	25	30	-
	F0 = 32A or less *2	4.0	4.0	4.0	40A current sensitivity *4	32	32	40	-

*1 The Ground-fault interrupter should support Inverter circuit.
The Ground-fault interrupter should combine using of local switch or wiring breaker.

*2 Please take the larger of F1 or F2 as the value for F0.
F1 = Total operating maximum current of the indoor units × 1.2
F2 = {V1 × (Quantity of Type1)/C} + {V1 × (Quantity of Type2)/C} + {V1 × (Quantity of Type3)/C} + · · · · · + {V1 × (Quantity of Type16)/C}

Connect to Branch box (PAC-MK·BC(B))

Indoor unit		V1	V2
Type1	PEAD-RP·JA(L)Q, PEAD-M·JA(L), PEY-(S)P·JA	26.9	2.4
Type2	SEZ-KD·VAQ(L), SEZ-M·DA(L), PCA-RP·KAQ, PCA-M·KA, PLA-RP·BA, PLA-RP·EA, SLZ-KF·VA2, SLZ-M·FA, PLY-(S)P·BA, SEZ-KH·VALT, PCY-(S)P·KA, PLA-M·EA	19.8	
Type3	MLZ-KA·VA, MLZ-KP·VF	9.9	
Type4	MFZ-KJ·VE2, MSXY-FJ·VE, MSZ-LN·VG, MSZ-AP·VG(D), MSZ-AP·VF, MSZ-EF·VG-E2, MSZ-EF·VGK-E1, MSZ-AP·VGK, MFZ-KT·VG, MSZ-LN·VG2	7.4	
Type5	MSZ-FH·VE, MSZ-SF·VE, MSZ-EF·VE, MSZ-SF·VA, MSZ-GF·VE, MSZ-GE·VA, MSZ-EF·VA, MSY-GE·VA, MSY-EF·VA, MSZ-FH·VA, MSY-GH·VA, MSZ-FK·VA, MSZ-GC·NA, MSZ-EF·VG-E1	6.8	
Type6	Branch box (PAC-MK·BC)	5.1	3.0
Type7	ecodan (Cylinder unit, Hydrobox)		5.0 *3

*3 This value may increase due to a locally connected actuator.

Connect to Connection kit (PAC-LV11M-J)

Indoor unit		V1	V2
Type8	MFZ-KJ·VE2, MSZ-LN·VG, MSZ-AP·VG(D), MSZ-AP·VF, MSZ-EF·VG-E2, MSZ-EF·VGK-E1, MSZ-AP·VGK, MFZ-KT·VG, MSZ-LN·VG2	7.4	2.4
Type9	MSZ-GE·VA(D), MSZ-SF·VA, MSZ-SF·VE, MSZ-EF·VE, MSZ-FH·VE, MSY-GE·VA, MSY-GH·VA, MSZ-EF·VG-E1	6.8	
Type10	Connection kit (PAC-LV11M-J)	3.5	

Sample chart

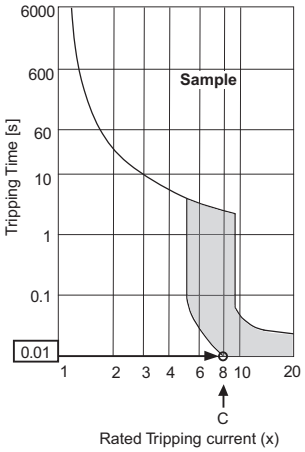

Connect to City Multi

Indoor unit		V1	V2
Type11	PEFY-P·VMA(L)-E(2), PEFY-P·VMA3-E	38.0	1.6
Type12	PEFY-VMHS-E-F, PEFY-P10-140VMHS-E	26.8	1.6
Type13	PMFY-VBM-E, PLFY-VBM-E, PLFY-VEM-E, PLFY-VFM-E1, PEFY-VMS1(L)-E, PCFY-VKM-E, PKFY-VHM-E, PKFY-VKM-E, PFFY-VKM-E2, PFFY-VLRMM-E, PLFY-EP·VEM-E, PMFY-P·VFM-D, PKFY-VLM-E, PFFY-VCM-E	19.8	2.4
Type14	PEFY-P·VMA(L)-E3, PEFY-M·VMA(L)-A	18.6	3.0
Type15	PKFY·VBM-E	3.5	2.4
Type16	PLFY-VLMD-E, PEFY-VMR-E-L/R, PFFY-VLEM-E, PFFY-VLRM-E, PWFY-VM-E1(2)-AU, PEFY-P·VMH-E-F, GUF-RD(H)4	0.0	0.0

C: Multiple of tripping current at tripping time 0.01s
Please pick up "C" from the tripping characteristic of the breaker.

<Example of "F2" calculation>
Condition PEFY-VMS × 4 + PEFY-VMA × 1, C = 8 (refer to right sample chart)
F2 = 19.8 × 4/8 + 38 × 1/8
= 14.65
→16 A breaker (Tripping current = 8 × 16 A at 0.01s)

*4 Current sensitivity is calculated using the following formula.

G1 = V2 × (Quantity of Type1) + V2 × (Quantity of Type2) +V2 × (Quantity of Type3) + · · · + V2 × (Quantity of Type16) + V3 × (Wire length [km])

G1	Current sensitivity
30 or less	30 mA 0.1sec or less
100 or less	100 mA 0.1sec or less

Wire thickness	V3
1.5 mm^2	48
2.5 mm^2	56
4.0 mm^2	66

1. Bear in mind ambient conditions (ambient temperature, direct sunlight, rain water, etc.) when proceeding with the wiring and connections.
2. The wire size is the minimum value for metal conduit wiring. The power cord size should be 1 rank thicker consideration of voltage drops. Make sure the power-supply voltage does not drop more than 10%.
3. Specific wiring requirements should adhere to the wiring regulations of the region.
4. Power supply cords of parts of appliances for outdoor use shall not be lighter than polychloroprene sheathed flexible cord (design 60245 IEC57). For example, use wiring such as YZW.
5. Install an earth line longer than power cables.

⚠WARNING

- Be sure to use specified wires for connections and ensure no external force is imparted to terminal connections. If connections are not fixed firmly, heating or fire may result.
- Be sure to use the appropriate type of overcurrent protection switch. Note that generated overcurrent may include some amount of direct current.

⚠CAUTION

- The breakers for current leakage should support Inverter circuit. (e.g. Mitsubishi Electric's NV-S-Series or equivalent). If no earth leakage breaker is installed, it may cause an electric shock.
- Breakers for current leakage should combine using of switch.
- Do not use anything other than a breaker with the correct capacity. Using a breaker of too large capacity may cause malfunction or fire.
- If a large electric current flows due to malfunction or faulty wiring, earth-leakage breakers on the unit side and on the upstream side of the power supply system may both operate. Depending on the importance of the system, separate the power supply system or take protective coordination of breakers.

Note

- This device is intended for the connection to a power supply system with a maximum permissible system impedance shown in the above table at the interface point (power service box) of the user's supply.
- The user must ensure that this device is connected only to a power supply system which fulfils the requirement above.
  If necessary, the user can ask the public power supply company for the system impedance at the interface point.

Thickness of wire for main power supply, capacities of the switch and system impedance

<Outdoor unit> <When power is supplied to outdoor unit and branch box separately>

	Model	Minimum wire thickness (mm^2)		Ground-fault interrupter *1	Local switch (A)		Breaker for wiring (A) (Non-fuse breaker)	Max. Permissive System Impedance
		Main cable	Ground		Capacity	Fuse		
Outdoor unit	PUMY-P200YKM2	2.5	2.5	25A 30mA 0.1sec. or less	25	25	25	-

<Outdoor unit> <When power is supplied to branch box from the outdoor unit>

	Model	Minimum wire thickness (mm^2)		Ground-fault interrupter *1	Local switch (A)		Breaker for wiring (A) (Non-fuse breaker)	Max. Permissive System Impedance
		Main cable	Ground		Capacity	Fuse		
Outdoor unit	PUMY-P200YKM2	4.0	4.0	32A 30mA 0.1sec. or less	32	32	32	-

<Indoor units> <When power is supplied to indoor unit and outdoor unit separately>

	Model	Minimum wire thickness (mm^2)			Ground-fault interrupter *1	Local switch (A)		Breaker for wiring (A) (Non-fuse breaker)	Max. Permissive System Impedance
		Main cable	Branch	Ground		Capacity	Fuse		
Total operating current of the indoor unit	F0 = 16A or less *2	1.5	1.5	1.5	20A current sensitivity *3	16	16	20	-
	F0 = 25A or less *2	2.5	2.5	2.5	30A current sensitivity *3	25	25	30	-
	F0 = 32A or less *2	4.0	4.0	4.0	40A current sensitivity *3	32	32	40	-

*1 The Ground-fault interrupter should support Inverter circuit.
The Ground-fault interrupter should combine using of local switch or wiring breaker.

*2 Please take the larger of F1 or F2 as the value for F0.
F1 = Total operating maximum current of the indoor units × 1.2
F2 = {V1 × (Quantity of Type1)/C} + {V1 × (Quantity of Type2)/C} + {V1 × (Quantity of Type3)/C} + · · · · · + {V1 × (Quantity of Type16)/C}

Connect to Branch box (PAC-MK·BC)

Indoor unit		V1	V2
Type1	SEZ-KD·VAQ(L), SEZ-M·DA(L), PCA-RP·KAQ, PCA-M·KA, SLZ-KF·VA, SLZ-M·FA, PLA-RP·EA, PLA-M·EA	19.8	2.4
Type2	PEAD-RP·JAQ(L), PEAD-M·JA(L)	26.9	
Type3	MLZ-KA·VA, MLZ-KP·VF	9.9	
Type4	MSZ-FH·VE, MSZ-GF·VE, MSZ-SF·VE, MSZ-EF·VE, MSZ-SF·VA, MSZ-EF·VG-E1	6.8	
Type5	MFZ-KJ·VE2, MSZ-LN·VG, MSZ-AP·VG, MSZ-AP·VF, MSZ-EF·VG-E2, MSZ-EF·VGK-E1, MSZ-AP·VGK, MFZ-KT·VG, MSZ-LN·VG2	7.4	
Type6	Branch box	5.1	3.0

Connect to Connection kit (PAC-LV11M)

Indoor unit		V1	V2
Type7	MSZ-EF·VE, MSZ-SF·VA, MSZ-SF·VE, MSZ-FH·VE, MSZ-EF·VG-E1	6.8	2.4
Type8	MFZ-KJ·VE2, MSZ-LN·VG, MSZ-AP·VG, MSZ-AP·VF, MSZ-EF·VG-E2, MSZ-EF·VGK-E1, MSZ-AP·VGK, MFZ-KT·VG, MSZ-LN·VG2	7.4	
Type9	Connection kit (PAC-LV11M)	3.5	

Connect to CITY MULTI

Indoor unit		V1	V2
Type10	PEFY-P·VMA(L)-E(2), PEFY-P·VMA3-E	38.0	1.6
Type11	PEFY-VMHS-E-F, PEFY-P40-140VMHS-E	26.8	1.6
Type12	PMFY-P·VBM-E, PLFY-P·VBM-E, PEFY-P·VMS1-E, PCFY-P·VKM-E, PKFY-P·VKM-E, PLFY-P·VEM-E, PLFY-EP·VEM-E, PLFY-P·VFM-E, PFFY-VKM-E2, PFFY-VLRMM-E, PKFY-VLM-E, PFFY-VCM-E, PLFY-M·VEM-E	19.8	2.4
Type13	PEFY-VMA(L)-E3, PEFY-M·VMA(L)-A	18.6	3.0
Type14	PEFY-P200VMHS-E	13.8	4.8
Type15	–	–	–
Type16	PLFY-P·VLMD-E, PEFY-P·VMR-E-L/R, PEFY-P·VMH-E-F, PFFY-P·VLEM-E, GUF-RD(H)4, PFFY-VLRM-E	0.0	0.0

Sample chart

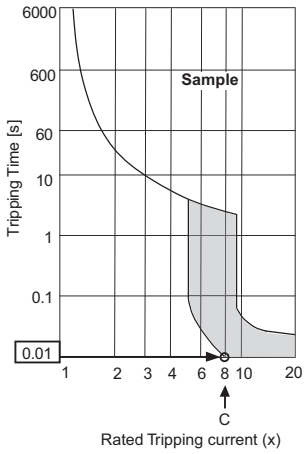

C: Multiple of tripping current at tripping time 0.01s
Please pick up "C" from the tripping characteristic of the breaker.

<Example of "F2" calculation>

*Condition PLFY-P·VBM-E × 4 + PEFY-VMA-E × 1, C = 8 (refer to right sample chart)

F2 = 19.8 × 4/8 + 38 × 1/8

= 14.65

→16 A breaker (Tripping current = 8 × 16 A at 0.01s)

*3 Current sensitivity is calculated using the following formula.

G1 = V2 × (Quantity of Type1) + V2 × (Quantity of Type2) + V2 × (Quantity of Type3) + · · · · · + V2 × (Quantity of Type16) + V3 × (Wire length [km])

G1	Current sensitivity
30 or less	30 mA 0.1sec or less
100 or less	100 mA 0.1sec or less

Wire thickness	V3
1.5 mm^2	48
2.5 mm^2	56
4.0 mm^2	66

1. Bear in mind ambient conditions (ambient temperature, direct sunlight, rain water, etc.) when proceeding with the wiring and connections.
2. The wire size is the minimum value for metal conduit wiring. The power cord size should be 1 rank thicker consideration of voltage drops. Make sure the power-supply voltage does not drop more than 10%.
3. Specific wiring requirements should adhere to the wiring regulations of the region.
4. Power supply cords of parts of appliances for outdoor use shall not be lighter than polychloroprene sheathed flexible cord (design 60245 IEC57). For example, use wiring such as YZW.
5. Install an earth line longer than power cables.

⚠WARNING

- Be sure to use specified wires for connections and ensure no external force is imparted to terminal connections. If connections are not fixed firmly, heating or fire may result.
- Be sure to use the appropriate type of overcurrent protection switch. Note that generated overcurrent may include some amount of direct current.

⚠CAUTION

- The breakers for current leakage should support Inverter circuit. (e.g. Mitsubishi Electric's NV-S-Series or equivalent). If no earth leakage breaker is installed, it may cause an electric shock.
- Breakers for current leakage should combine using of switch.
- Do not use anything other than a breaker with the correct capacity. Using a breaker of too large capacity may cause malfunction or fire.
- If a large electric current flows due to malfunction or faulty wiring, earth-leakage breakers on the unit side and on the upstream side of the power supply system may both operate. Depending on the importance of the system, separate the power supply system or take protective coordination of breakers.

Note

- This device is intended for the connection to a power supply system with a maximum permissible system impedance shown in the above table at the interface point (power service box) of the user's supply.
- The user must ensure that this device is connected only to a power supply system which fulfils the requirement above.
  If necessary, the user can ask the public power supply company for the system impedance at the interface point.

9-4. Power supply examples

The local standards and/or regulations is applicable at a higher priority.

9-4-1. PUMY-P112, 125, 140VKM5

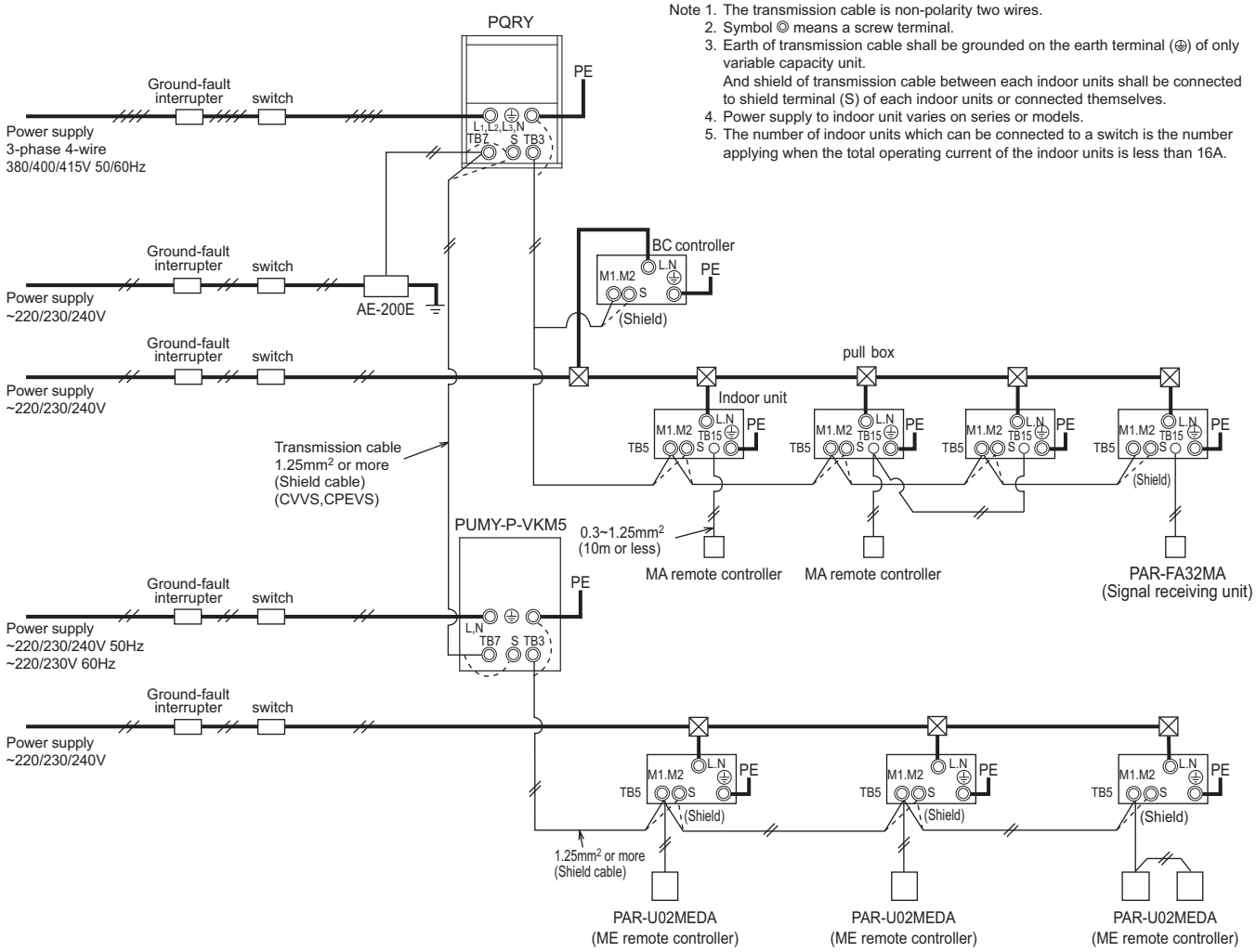

The local standards and/or regulations is applicable at a higher priority.

9-4-2. PUMY-P112, 125, 140YKM(E)4
PUMY-P200YKM2

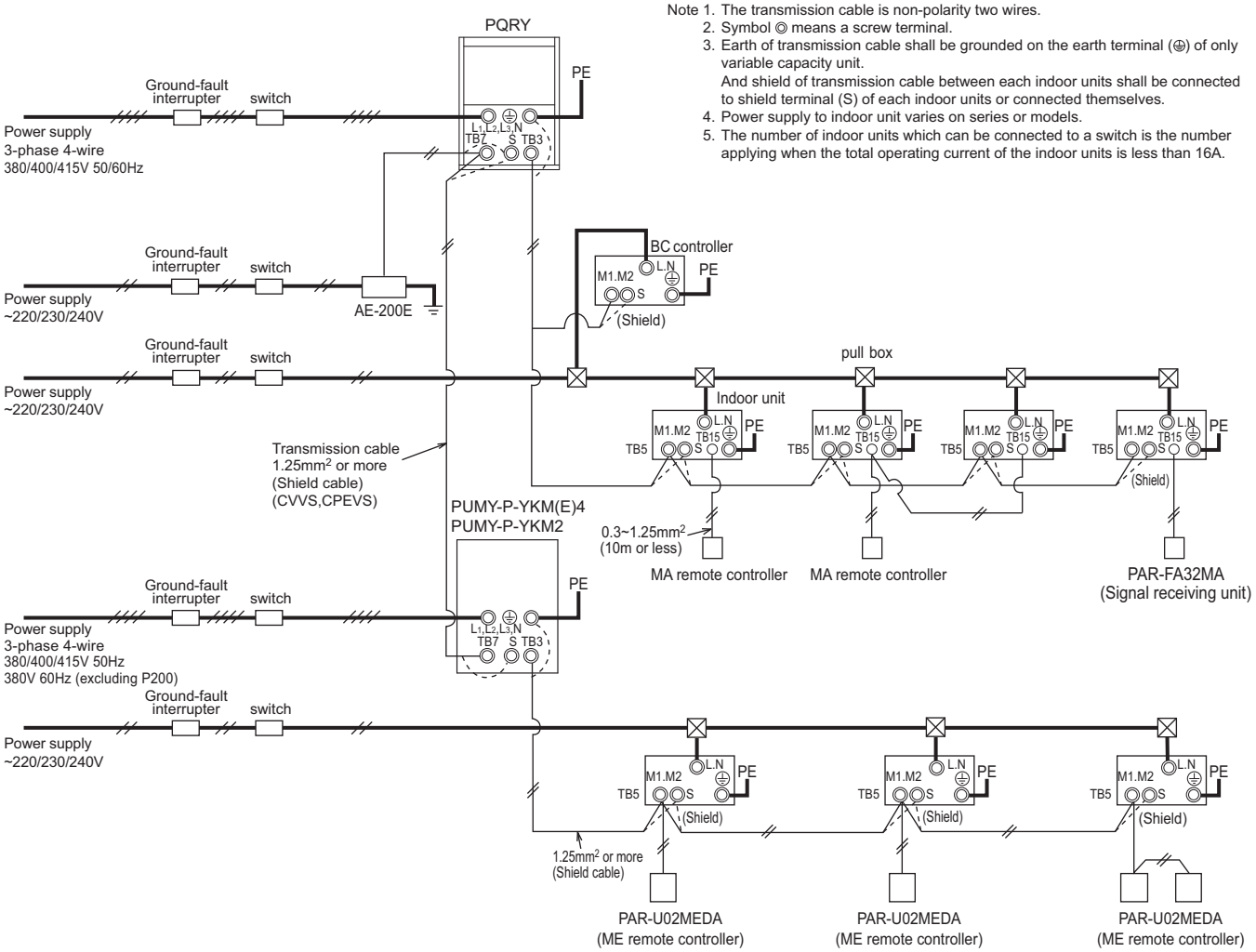

Note 1. The transmission cable is non-polarity two wires.
2. Symbol ◎ means a screw terminal.
3. Earth of transmission cable shall be grounded on the earth terminal (⏚) of only variable capacity unit.
And shield of transmission cable between each indoor units shall be connected to shield terminal (S) of each indoor units or connected themselves.
4. Power supply to indoor unit varies on series or models.
5. The number of indoor units which can be connected to a switch is the number applying when the total operating current of the indoor units is less than 16A.

10-1. Transmission cable length limitation

10-1-1. Using MA Remote controller

Long transmission cable causes voltage down, therefore, the length limitation should be obeyed to secure proper transmission.

Max. length via Outdoor (M-NET cable)	L1+L2+L3, L1+L2+L4+L5, L3+L4+L5	<=500m[1640ft]	1.25mm^2 [AWG16] or thicker
Max. length to Outdoor (M-NET cable)	L1, L3, L2+L4, L5	<=200m[656ft]	1.25mm^2 [AWG16] or thicker
Max. length from MA to Indoor for each group	a1+a2, a1+a2+a3+a4	<=200m[656ft]	0.3-1.25mm^2 [AWG22-16]
24VDC to AG-150A	n	<=50m[164ft.]	0.75-2.0 mm^2 [AWG18-14]

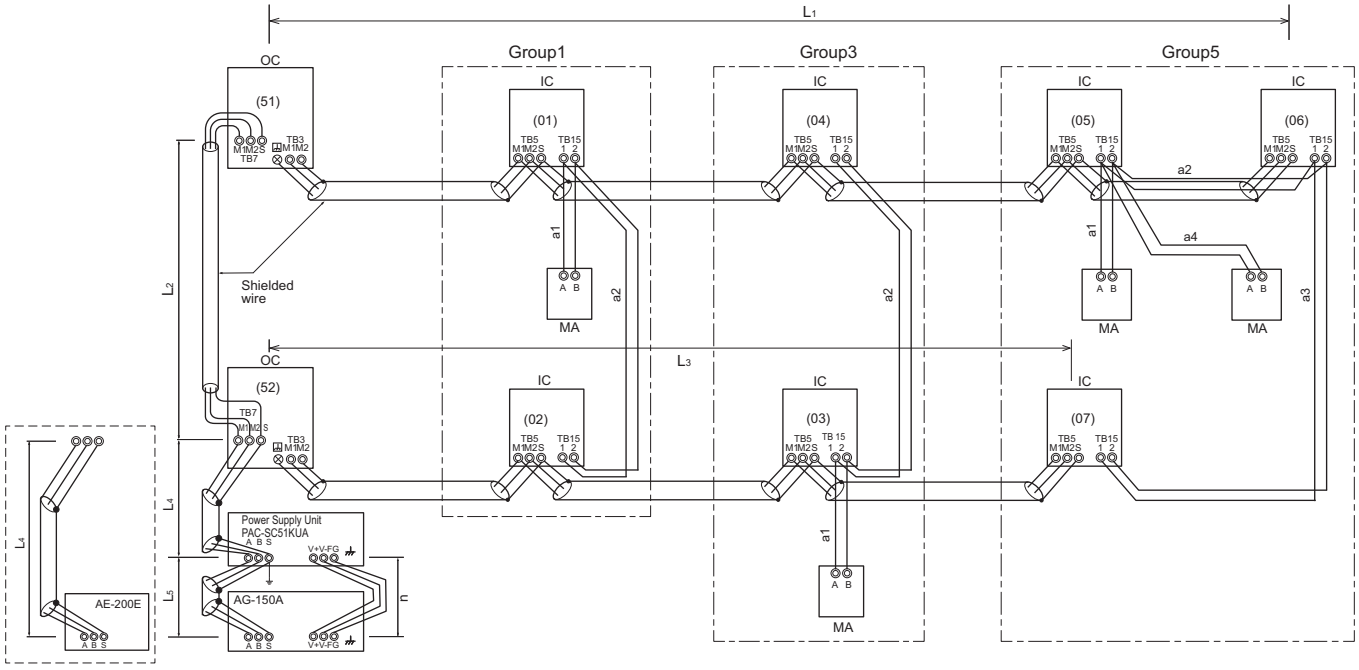

OC: Outdoor unit; IC: Indoor unit; MA: MA remote controller

10-1-2. Using ME Remote controller

Long transmission cable causes voltage down, therefore, the length limitation should be obeyed to secure proper transmission.

Max. length via Outdoor (M-NET cable)	L1+L2+L3+L4, L1+L2+L6+L7,L1+L2+L3+L5, L3+L4+L6+L7, L3+L5+L6+L7, L4+L5	<=500m[1640ft]	1.25mm^2 [AWG16] or thicker
Max. length to Outdoor (M-NET cable)	L1, L3+L4, L2+L6, L7, L3+L5	<=200m[656ft]	1.25mm^2 [AWG16] or thicker
Max. length from ME to Indoor	e1, e2, e3, e4	<=10m[32ft] *1	0.3-1.25mm^2 [AWG22-16] *1
24VDC to AG-150A	n	<=50m[164ft.]	0.75-2.0 mm^2 [AWG18-14]

*1. If the length from ME to Indoor exceed 10m, use 1.25 mm^2[AWG16] shielded cable, but the total length should be counted into Max. length via Outdoor.

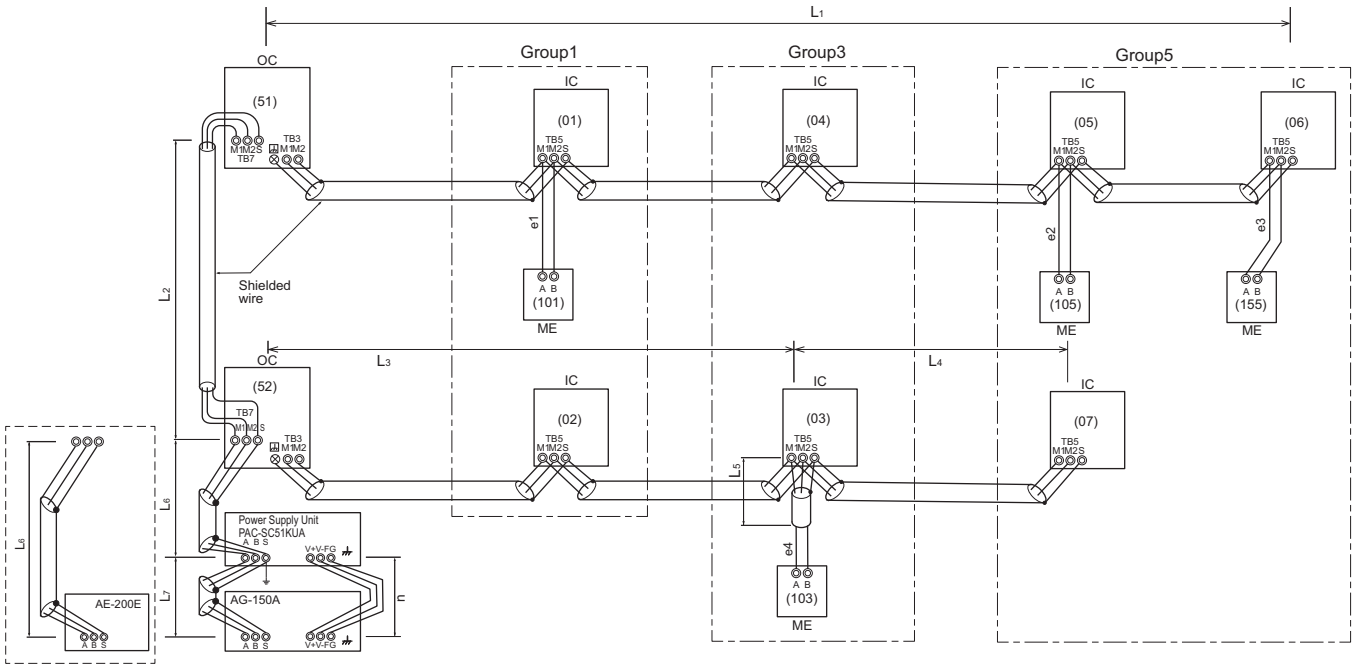

OC: Outdoor unit; IC: Indoor unit; ME: ME remote controller

10-1-3. Using a Branch Box

Long transmission cable causes voltage down, therefore, the length limitation should be obeyed to secure proper transmission.

Max length via outdoor units (M-NET cable):	$L_1 + L_2 + L_3 + L_4 + L_5$	<=500m[1640ft]	1.25mm^2 [AWG16] or thicker
Max transmission cable length (M-NET cable):	$L_1 + L_2$, $L_3 + L_4$, L_5	<=200m[656ft]	1.25mm^2 [AWG16] or thicker

<Example of Transmission Cable Wiring: When Using a Branch Box>

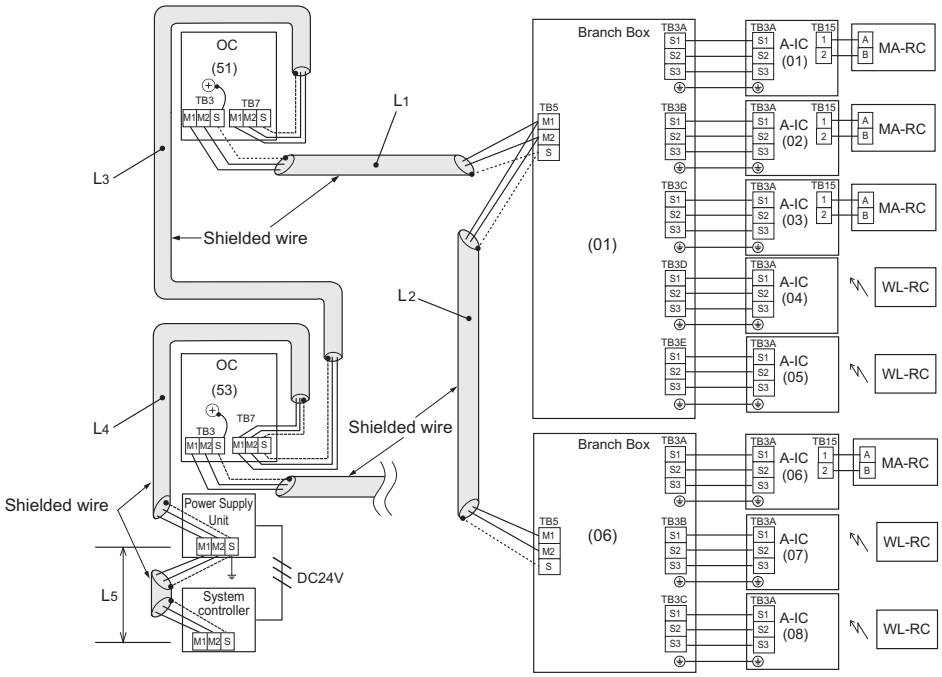

( ) : Address example
A-IC : M, P, S-series Indoor unit

10-1-4. Mixing system

Long transmission cable causes voltage down, therefore, the length limitation should be obeyed to secure proper transmission.

Max length via outdoor units:	$L_1 + L_2 + L_3 + L_4 + L_5 + L_6 + L_7$	<=500m[1640ft]	1.25mm^2 [AWG16] or thicker
Max transmission cable length:	$L_1 + L_2 + L_3 + L_4$, $L_5 + L_6$, L_7	<=200m[656ft]	1.25mm^2 [AWG16] or thicker

<Example of Transmission Cable Wiring: Mixing system>

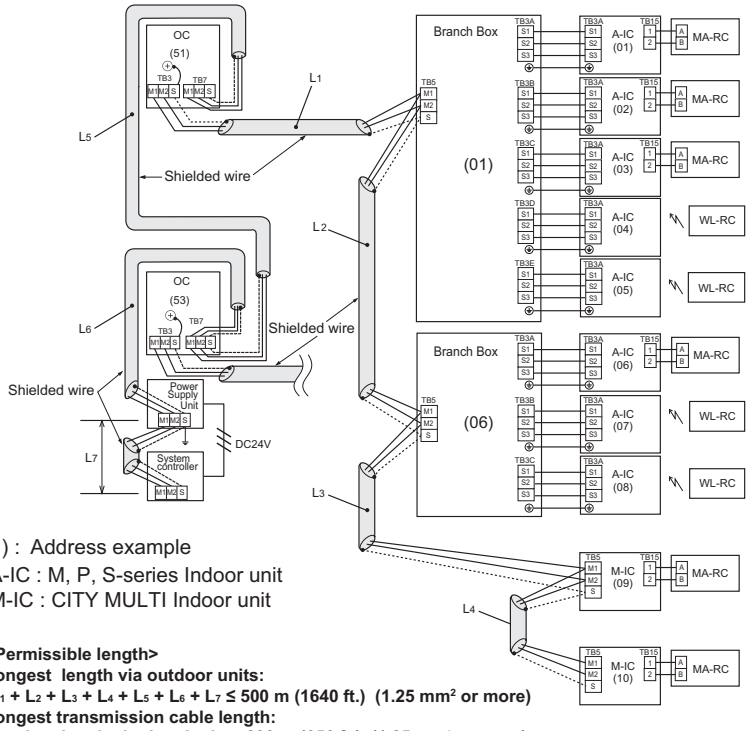

( ) : Address example
A-IC : M, P, S-series Indoor unit
M-IC : CITY MULTI Indoor unit

<Permissible length>
Longest length via outdoor units:
$L_1 + L_2 + L_3 + L_4 + L_5 + L_6 + L_7 \leq 500$ m (1640 ft.) (1.25 mm^2 or more)
Longest transmission cable length:
$L_1 + L_2 + L_3 + L_4$, $L_5 + L_6$, $L_7 \leq 200$ m (656 ft.) (1.25 mm^2 or more)

10-2. Transmission cable specifications

	Transmission cables (Li)	M-NET remote controller cables (ei)	MA Remote controller cables (ai)
Type of cable	Shielding wire (2-core) CVVS, CPEVS or MVVS	Sheathed 2-core cable (unshielded) CVV	
Cable size	More than 1.25 mm^2 [AWG16]	0.3 ~ 1.25 mm^2 [AWG22~16]	0.3 ~ 1.25 mm^2 [AWG22 ~ 16]*1
Remarks	Max length: within 200 m	When 10 m [32ft] is exceeded, use cables with the same specification as transmission cables.	Max length: 200 m [656ft]

*1 To wire PAR-CT01MA, PAR-4XMAA, PAR-3XMAA ("X" represents 0 or later), and Simple MA remote controller, use a wire with a diameter of 0.3 mm^2 [AWG22]

CVVS, MVVS: PVC insulated PVC sheathed shielded control cable
CPEVS: PE insulated PVC sheathed shielded communication cable
CVV: PVC insulated PVC sheathed control cable

10-3. System configuration restrictions

10-3-1. Common restrictions for the CITY MULTI system

For each Outdoor/Heat source unit, the maximum connectable quantity of Indoor unit is specified at its Specifications table.

A) 1 Group of Indoor units can have 1-16 Indoor units;
*OA processing unit GUF-RD(H) is considered as Indoor unit.

B) Maximum 2 remote controllers for 1 group;
*MA/ME remote controllers cannot be present together in 1group.
*When a PAR-CT01MA, PAR-4XMAA, or PAR-3XMAA ("X" represents 0 or later) is connected to a group, no other MA remote controllers can be connected to the same group.

C) 1 Lossnay unit can interlock maximum 16 Indoor units; 1 Indoor unit can interlock only 1 Lossnay unit.

D) Maximum 3 System controllers are connectable when connecting to TB3 of the Outdoor/Heat source unit.

E) A maximum of 6 system controller are connectable to TB3 and TB7 of Outdoor/Heat source unit.

F) 4 System controllers or more are connectable when connecting to TB7 of the Outdoor/Heat source unit, if the transmission power is supplied by the power supply unit PAC-SC51KUA.
*System controller connected as described in D) would have a risk that the failure of connected Outdoor/Heat source unit would stop power supply to the System controller.

10-3-2. Ensuring proper communication power and the number of connected units for M-NET

In order to ensure proper communication among Outdoor/Heat source unit, Indoor unit, Lossnay, OA processing unit GUF-RD(H), and Controllers, the transmission power situation for the M-NET should be observed. In some cases, Transmission booster should be used. Taking the power consumption of Indoor unit as 1, the equivalent power consumption or supply of others are listed at Table 1 and Table 2.

Both the transmission line for centralized controller and indoor-outdoor transmission line must meet the conditions listed below. (Both conditions a) and b) must be met.)

a) [Total equivalent power consumption] ≤ [The equivalent power supply]
b) [Total equivalent number of units (Table 1)] ≤ [40]

Table 1 The equivalent power consumption and the equivalent number of units

Category	Model	The equivalent power consumption	The equivalent number of units
CITY MULTI indoor unit OA unit CITY MULTI connection kit Air handling unit controller	Except for the models indicated by *2 PEFY-AF2500, 3000, 4000, 5000, 6000MH GUF-50, 100 PAC-LV11M-J PAC-AH125, 140, 250, 500M-J	1	1
CITY MULTI indoor unit *2	PDFY-P100VM-E-RE	2	2
BC controller	CMB	2	1
PWFY *1	P100VM-E-BU	6	1
	P200VM-E1-AU P200VM-E2-AU	5	1
	(E)P100VM-E1-AU (E)P100VM-E2-AU P140VM-E1-AU P140VM-E2-AU	1	1
PFAV	P250, 300, 500, 600VM-E(-F)	1	1
	P750, 900VM-E(-F)	2	2
PFV, PEV	P200, 250, 400, 500YM-A	1	1
MA remote controller/Lossnay	PAR-CT01MA PAR-21MA PAR-31MA PAR-32MA PAR-33MA PAR-40MA PAC-YT52CRA PAR-FA32MA LGH PZ-60DR-E PZ-61DR-E PZ-43SMF-E	0	0
ME remote controller	PAR-U02MEDA	0.5	1
	PZ-52SF	0.25	1
System controller	AE-200E AE-50E EW-50E LM-AP	0	0
	AG-150A EB-50GU-J PAC-IF01AHC-J	0.5	1
	AT-50B	1.5	5
	PAC-YG60MCA PAC-YG66DCA PAC-YG63MCA	0.25	1
ON/OFF controller	PAC-YT40ANRA	1	1
MN converter	CMS-MNG-E	2	1
Outdoor/Heat source unit	TB7 power consumption	0	0
System control interface	MAC-333IF-E	0	0
A-M converter	PAC-SF83MA-E		

*1 PWFY cannot be connected to PUMY model.

Table 2 The equivalent power supply

Category	Model	The equivalent power supply		
Transmission Booster	PAC-SF46EPA-G	25 *1		
Power supply unit	PAC-SC51KUA	5		
Expansion controller	PAC-YG50ECA	6		
BM ADAPTER	BAC-HD150	6		
System controller	AE-200E/AE-50E	0.75		
	EW-50E	1.5		
	LM-AP	0		
Outdoor/Heat source unit		TB3 and TB7 total	TB7 only	TB3 only
	Outdoor unit except S-Series and TKA *2	32 *1	6	32 *1-equivalent power supplied to TB7
	S-Series outdoor unit	12 *1	0	12 *1
	TKA outdoor unit	32 *1	- *3	32 *1

*1 When one or more indoor units listed below is connected, subtract 3 from the equivalent power supply.

Table 3

Category	Model
Indoor unit	Sized P200/P250 PEFY-AF4000/5000/6000MH, PFFY-P400/500YM-E, PFFY-P400/500YMH-C PFFY-P300/600YM-E-F, PFFY-P300/600YM-C-F, PDFY-P100VM-E-RE
Air handling unit controller	PAC-AH250/500M-J
PFAV	PFAV-P500/600/750/900VM-E(-F)
PFV	PFV-P400/500YM-A
PEV	PEV-P400/500YM-A

*2 If PAC-SC51KUA is used to supply power at TB7 side, no power supply need from Outdoor/Heat source unit at TB7, Connector TB3 itself will therefore have 32.
*3 Do not supply power to TB7 from TKA outdoor units.
Use PAC-SC51KUA or PAC-SF46EPA-G when connecting an M-NET device to TB7.

With the equivalent power consumption values and the equivalent number of units in Table 1 and Table 2, PAC-SF46EPA-G can be designed into the air-conditioner system to ensure proper system communication according to (A), (B), (C).

(A) Firstly, count from TB3 at TB3 side the total equivalent number of units of Indoor units, OA processing units, ME remote controller, and System controllers. If the total equivalent number of units reaches 40, a PAC-SF46EPA-G should be set.
(B) Secondly, count from TB7 side to TB3 side the total transmission power consumption. If the total equivalent power supply reaches 32, a PAC-SF46EPA-G should be set. Yet, if a PAC-SC51KUA or another controller with a built-in power supply, such as PAC-YG50ECA, is used to supply power at TB7 side, count from TB3 side only.
(C) Thirdly, count from TB7 at TB7 side the total transmission power consumption, If the total equivalent power supply for only TB7 reaches 6, a PAC-SF46EPA-G should be set. Also, count from TB7 at TB7 side the total equivalent number of units of System controllers, and so on. If the total equivalent number of units reaches 40, a PAC-SF46EPA-G should be set.

* The equivalent power supply of S-Series outdoor unit is 12.
* When one or more indoor units listed in Table 3 is connected, subtract 3 from the equivalent power supply.

■ System example

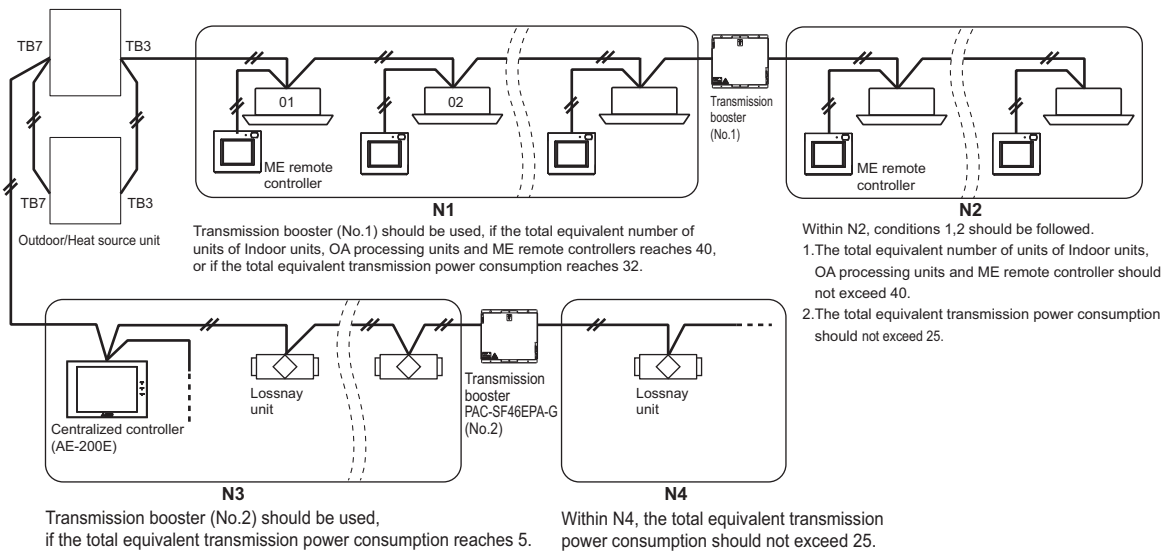

10-3-3. Ensuring proper power supply to System controller

The power to System controller (excluding AE-200E, AE-50E, EW-50E, BAC-HD150, LM-AP) is supplied via M-NET transmission line. M-NET transmission line at TB7 side is called Centralized control transmission line while one at TB3 side is called Indoor-Outdoor/Heat source transmission line. There are 3 ways to supply power to the System controller .

A) Connecting to TB3 of the Outdoor/Heat source unit and receiving power from the Outdoor/Heat source unit.
B) Connecting to TB7 of the Outdoor/Heat source unit and receiving power from the Outdoor/Heat source unit.
(Not applicable to the PUMY model)
C) Connecting to TB7 of the Outdoor/Heat source unit but receiving power from power supply unit PAC-SC51KUA.
* System controllers (AE-200E, AE-50E, EW-50E, BAC-HD150, LM-AP) have a built-in function to supply power to the M-NET transmission lines, so no power needs to be supplied to the M-NET transmission lines from the Outdoor/Heat source units or from PAC-SC51KUA.

10-3-3-A. When connecting to TB3 of the Outdoor/Heat source unit and receiving power from the Outdoor/Heat source unit.

Maximum 3 System controllers can be connected to TB3.
If there is more than 1 Outdoor/Heat source unit, it is necessary to replace power supply switch connector CN41 with CN40 on one Outdoor/Heat source unit.

Fig. 10-3-3-A

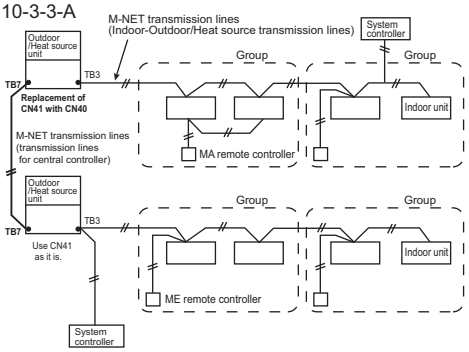

10-3-3-B. When connecting to TB7 of the Outdoor/Heat source unit and receiving power from the Outdoor/Heat source unit. (Not applicable to the PUMY model)

A maximum of 6 system controller are connectable to TB3 and TB7 of Outdoor/Heat source unit. (Not applicable to the PUMY model)
It is necessary to replace power supply switch connector CN41 with CN40 on one Outdoor/Heat source unit.

Fig. 10-3-3-B

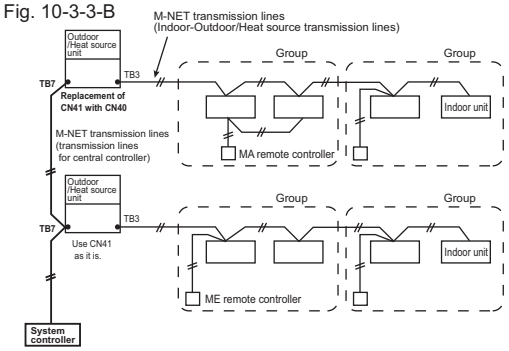

10-3-3-C. When connecting to TB7 of the Outdoor/Heat source unit but receiving power from PAC-SC51KUA.

When using PAC-SC51KUA to supply transmission power, the power supply connector CN41 on the Outdoor/Heat source units should be kept as it is. It is also a factory setting.
1 PAC-SC51KUA supports maximum 1 AG-150A or 1 EB-50GU-J unit due to the limited power 24VDC at its TB3.
However, 1 PAC-SC51KUA supplies transmission power at its TB2 equal to 5 Indoor units, which is referable at Table 2.
If System controller, ON/OFF controller connected to TB7 consume transmission power more than 5 (Indoor units), Transmission booster PAC-SF46EPA-G is needed. PAC-SF46EPA-G supplies transmission power equal to 25 Indoor units.

Fig. 10-3-3-C

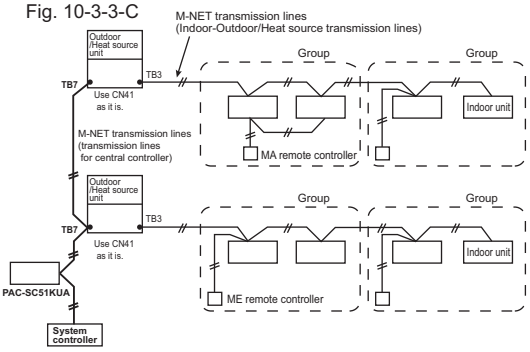

⚠ CAUTION

■How to connect system controllers (AE-200E, AE-50E, EW-50E, BAC-HD150, LM-AP) to a given system
System controllers (AE-200E, AE-50E, EW-50E, BAC-HD150, LM-AP) have a built-in function to supply power to the M-NET transmission lines, so no power needs to be supplied to the M-NET transmission lines from the Outdoor/Heat source units or from PAC-SC51KUA.
Leave the power supply connector on the Outdoor/Heat source unit connected to CN41 as it is.
Refer to 10-3-2 for information about the power-supply capacity of each system controller (EW-50E, BAC-HD150, LM-AP) to the low-level system controllers.

Fig. 10-3-3-D

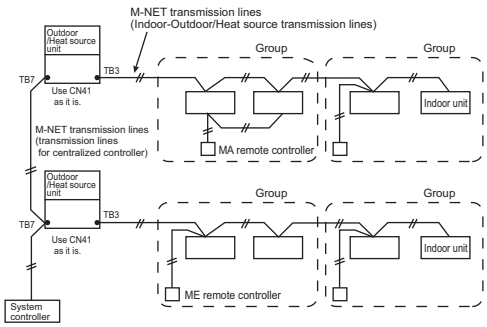

10-3-4. Power supply to LM-AP

1-phase 220-240VAC power supply is needed.
The power supply unit PAC-SC51KUA is not necessary when connecting only the LM-AP. Yet, make sure to change the power supply changeover connector CN41 to CN40 on the LM-AP.

10-3-5. Power supply to expansion controller

1-phase 100-240VAC power supply is needed.
The power supply unit PAC-SC51KUA is not necessary.
The expansion controller supplies power through TB3, which equals 6 indoor units. (refer to Table 2)

10-3-6. Power supply to BM ADAPTER

1-phase 100-240VAC power supply is needed.
The power supply unit PAC-SC51KUA is not necessary when only BM ADAPTER is connected.
Yet, make sure to move the power jumper from CN41 to CN40 on the BM ADAPTER.

10-3-7. Power supply to AE-200E/AE-50E/EW-50E

1-phase 100-240VAC power supply is needed.
The power supply unit PAC-SC51KUA is not necessary when connecting only the AE-200E/AE-50E/EW-50E.

10-4. Address setting

10-4-1. Switch operation

In order to constitute CITY MULTI in a complete system, switch operation for setting the unit address No. and connection No. is required.

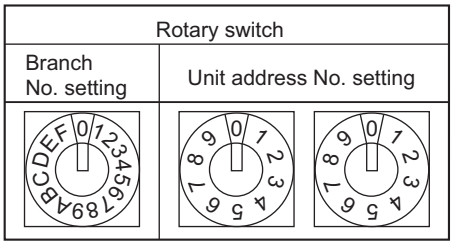

① Address No. of outdoor unit, indoor unit and remote controller.
The address No. is set at the address setting board.
In the case of R2 system, it is necessary to set the same No. at the branch No. switch of indoor unit as that of the BC controller connected. (When connecting two or more branches, use the lowest branch No.)

② Caution for switch operations

- Be sure to shut off power source before switch setting. If operated with power source on, switch can not operate properly.
- No units with identical unit address shall exist in one whole air conditioner system. If set erroneously, the system can not operate.

③ MA remote controller

- When connecting only one remote controller to one group, it is always the main remote controller. When connecting two remote controllers to one group, set one remote controller as the main remote controller and the other as the sub remote controller.
- The factory setting is "Main".

PAR-4XMAA, PAR-3XMAA ("X" represents 0 or later), PAR-CT01MA
The MA remote controller does not have the switches listed above.
Refer to the installation manual for the function setting.

PAC-YT52CRA

Setting the dip switches

There are switches on the back of the top case. Remote controller Main/Sub and other function settings are performed using these switches. Ordinarily, only change the Main/Sub setting of SW1.
(The factory settings are ON for SW1, 2, and 3 and OFF for SW4.)

SW No.	SW contents Main	ON	OFF	Comment
1	Remote controller Main/Sub setting	Main	Sub	Set one of the two remote controllers at one group to "ON".
2	Temperature display units setting	Celsius	Fahrenheit	When the temperature is displayed in [Fahrenheit], set to "OFF".
3	Cooling/heating display in AUTO mode	Yes	No	When you do not want to display "Cooling" and "Heating" in the AUTO mode, set to "OFF".
4	Indoor temperature display	Yes	No	When you want to display the indoor temperature, set to "ON".

10-4-2. Rule of setting address

Unit		Address setting	Example	Note
Indoor unit		01 ~ 50	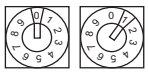	Use the most recent address within the same group of indoor units. Make the indoor units address connected to the BC controller (Sub) larger than the indoor units address connected to the BC controller (Main). If applicable, set the sub BC controllers in an PURY/PQRY system in the following order: (1) Indoor unit to be connected to the BC controller (Main) (2) Indoor unit to be connected to the BC controller (No.1 Sub) (3) Indoor unit to be connected to the BC controller (No.2 Sub) Set the address so that (1)<(2)<(3)
Branch Box		01 ~ 50	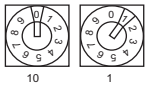	Use a number within the range 01~ 50, but it should not make the highest address of connected A-IC exceed 50. • Specify whether indoor units are connected to each port (A, B, C, D, and E). SW1 1 2 3 4 5 (6) Port A B C D E not use indoor units are connected ON indoor units are not connected OFF
Outdoor unit		51 ~ 99, 100	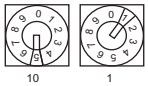	The smallest address of indoor unit in same refrigerant system + 50 * The address automatically becomes "100" if it is set as "01~ 50"
BC controller (Main)		52 ~ 99, 100	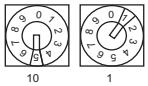	The address of outdoor unit + 1 * Please reset another address between 51 and 99 when two addresses overlap. * The address automatically becomes "100" if it is set as "01~ 50"
BC controller (Sub)		53 ~ 99, 100	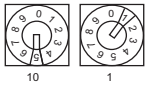	Lowest address within the indoor units connected to the BC controller (Sub) plus 50.
Local remote controller	ME Remote controller (Main)	101 ~ 150	1 Fixed 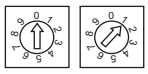	The smallest address of indoor unit in the group + 100 * The place of "100" is fixed to "1"
	ME Remote controller (Sub)	151 ~ 199, 200	1 Fixed 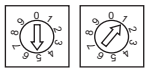	The address of main remote controller + 50 * The address automatically becomes "200" if it is set as "00"
System controller	ON/OFF remote controller	201 ~ 250	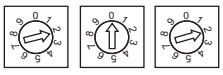	The smallest group No. to be managed + 200 * The smallest group No. to be managed is changeable.
	AE-200E/AE-50E AG-150A EB-50GU-J EW-50E AT-50B	000, 201 ~ 250	0 0 0 100 10 1	* AT-50B cannot be set to "000".
	PAC-YG50ECA	000, 201 ~ 250	0 0 0 100 10 1	* Settings are made on the initial screen of AG-150A.
	BAC-HD150	000, 201 ~ 250	0 0 0 100 10 1	* Settings are made with setting tool of BM ADAPTER.
	LMAP04-E	201 ~ 250	2 Fixed 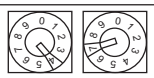	
PI, AI, DIDO	PAC-YG60MCA	01 ~ 50	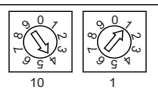	
	PAC-YG63MCA	01 ~ 50	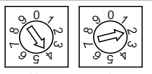	
	PAC-YG66DCA	01 ~ 50	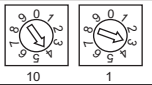	
Lossnay, OA processing unit		01 ~ 50	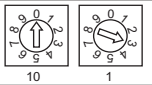	After setting the addresses of all the indoor units, assign an arbitrary address.
PAC-IF01AHC		201 ~ 250	2 Fixed 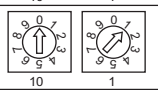	

10-4-3. System example

Factory setting

Original switch setting of the outdoors, indoors, controllers, LM-AP and BM ADAPTER at shipment is as follows.

- Outdoor unit : Address: 00, CN41: ON (Jumper), DipSW2-1: OFF
- Indoor unit : Address: 00
- ME Remote controller : Address: 101
- LM-AP : Address: 247, CN41: ON (Jumper), DipSW1-2: OFF
- BM ADAPTER : Address: 000, CN41: ON (Jumper)
- AE-200E/AE-50E/EW-50E : Address: 000, CN21: ON (Jumper)

10-4-3-1. Basic (No address setting)

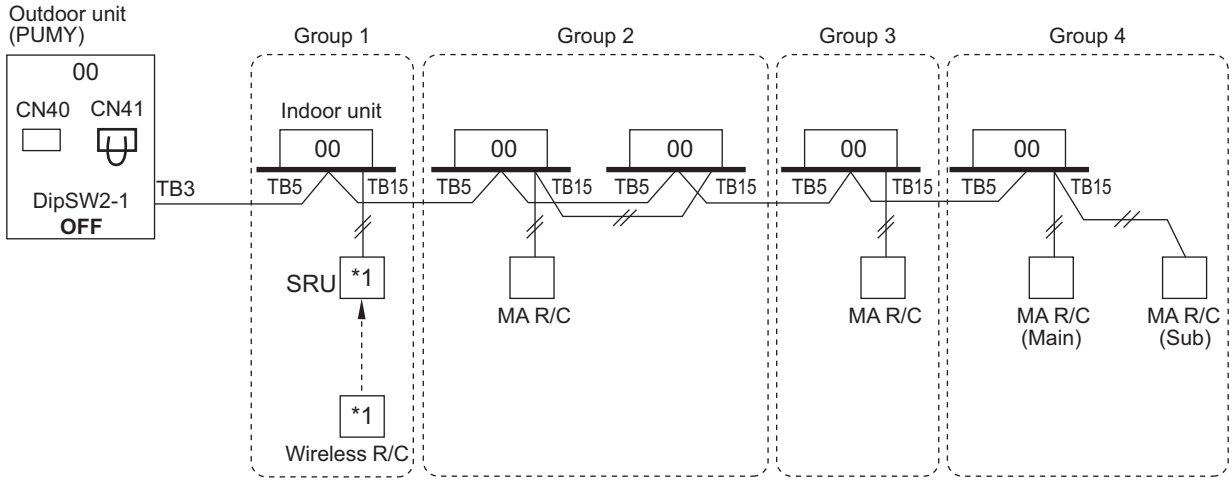

*1 For wireless R/C and Signal receiver unit(SBU), channel 1, 2 and 3 are selectable and should be set same channel.

10-4-3-2. Basic, Sub/main ME remote controller

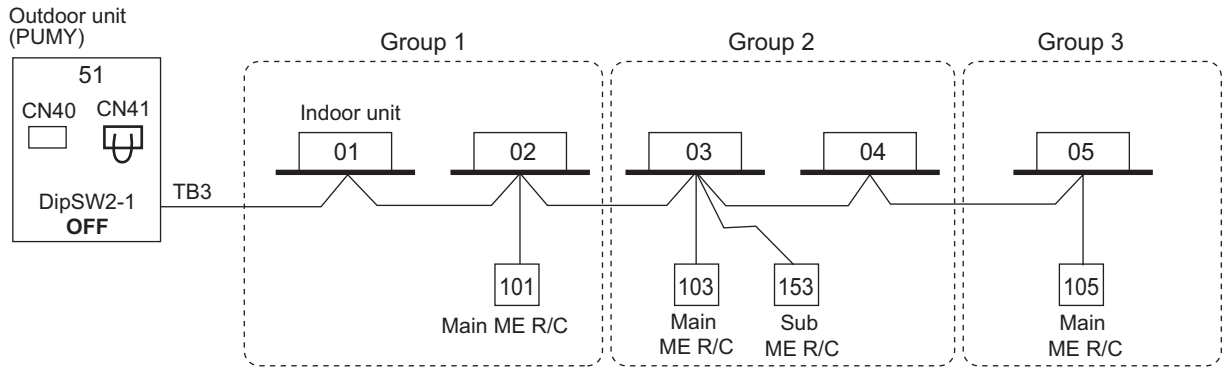

10-4-3-3. Grouping in different refrigerant system

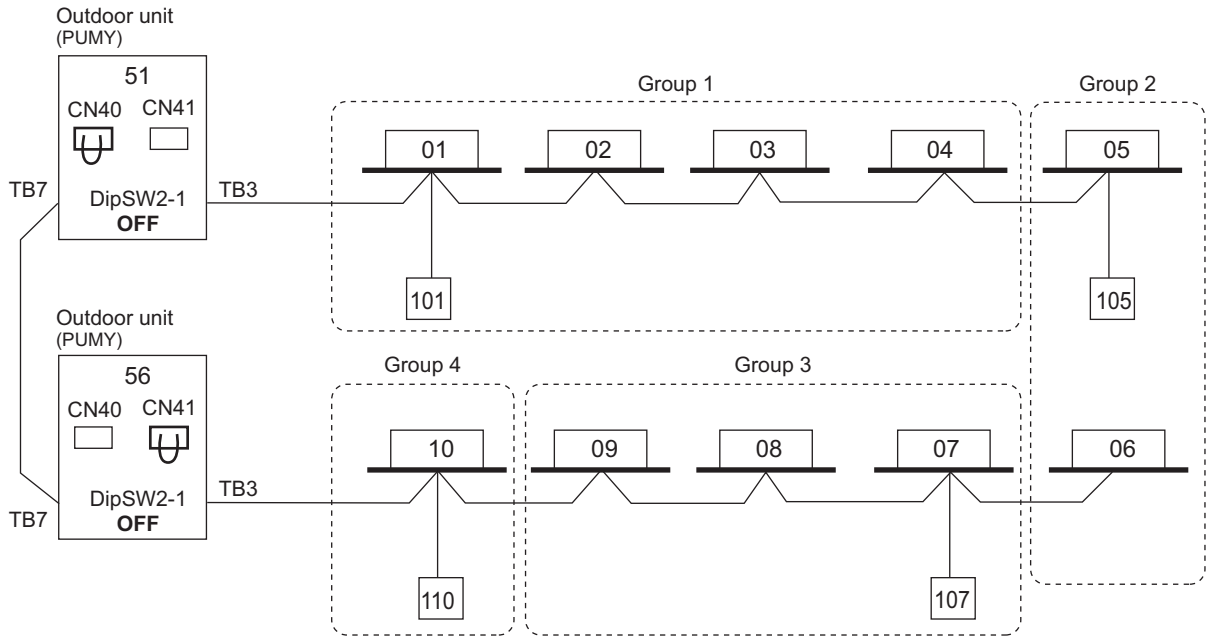

NOTE
- It is necessary to change the connecter to CN40 on the outdoor unit (Heat source unit) control board (only one outdoor unit (Heat source unit)) when the group is set between other refrigerant systems.
- It is necessary to set on the remote controller by manual when group sets on the different refrigerant system. Please refer to remote controller installation manual.

10-4-3-4. 2 Outdoor unit, AG-150A, AE-200E, MA

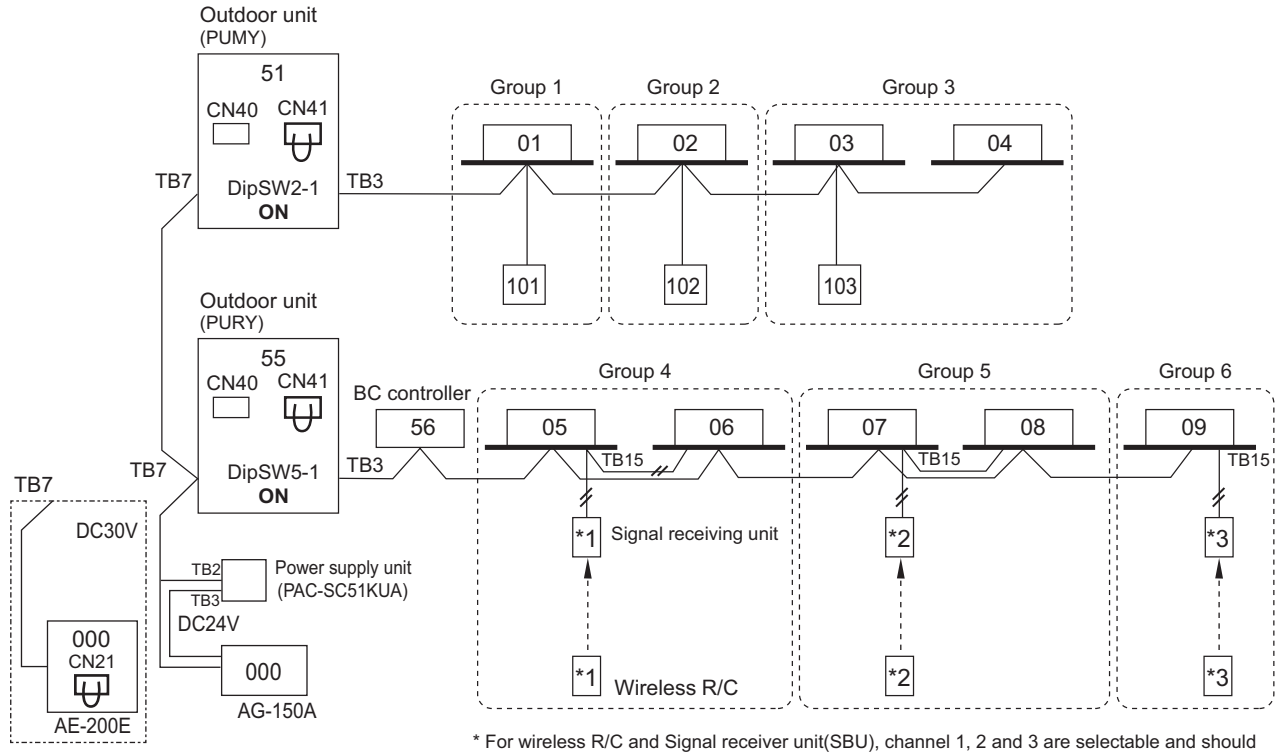

* For wireless R/C and Signal receiver unit(SBU), channel 1, 2 and 3 are selectable and should be set same channel.

10-4-3-5. TG-2000A(*1)+AE-200E/AE-50E/EW-50E

AE-200E can control max. 50 indoor units;
TG-2000A can control max. 40 of AE-200E/AE-50E/EW-50E;*2
TG-2000A can control max. 2000 indoor units.

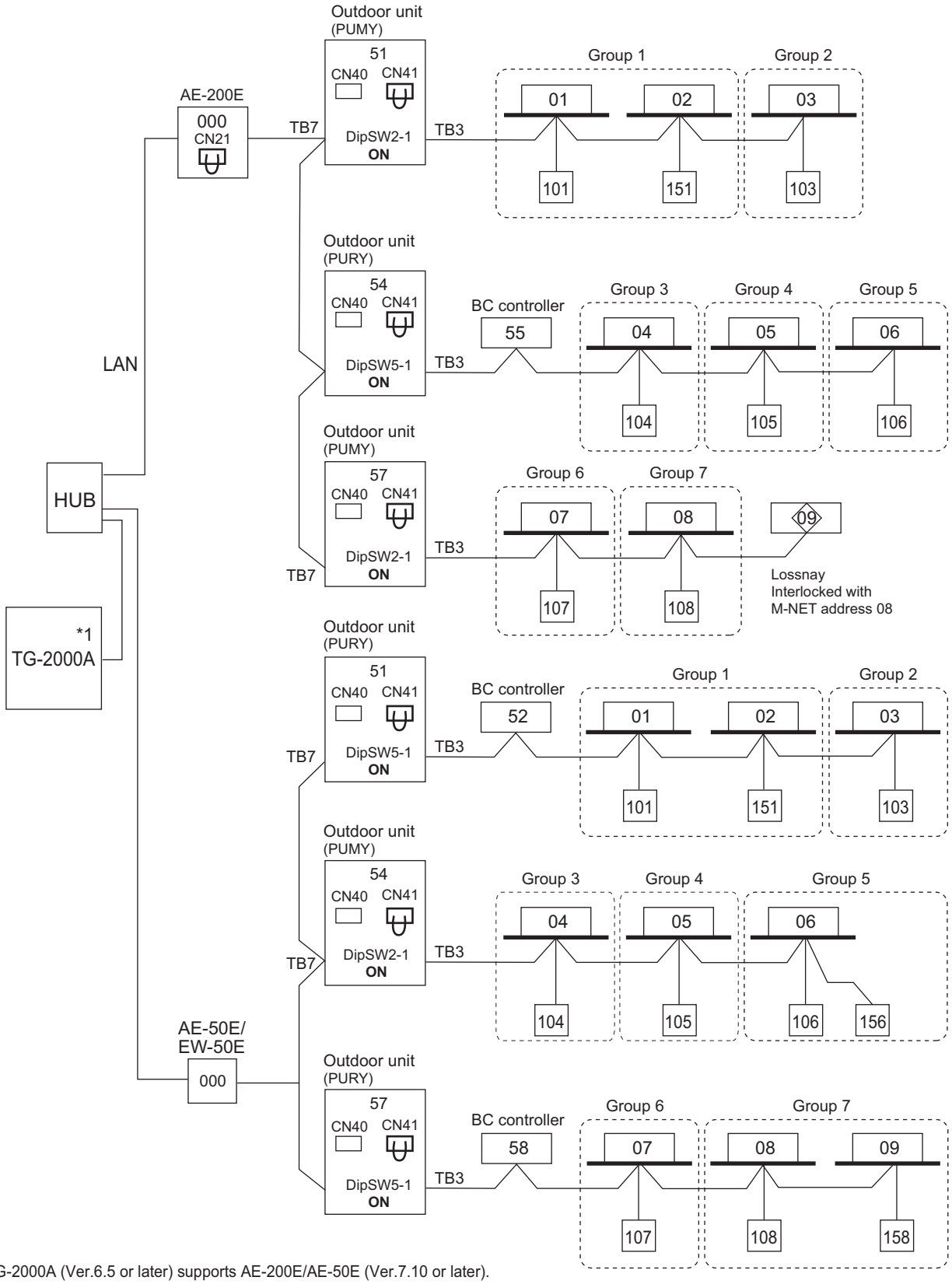

*1 TG-2000A (Ver.6.5 or later) supports AE-200E/AE-50E (Ver.7.10 or later).
TG-2000A (Ver.6.60 or later) supports EW-50E.

*2 When AE-200E connected with AE-50E/EW-50E is connected, the number of AE-50E/EW-50E will be the maximum controllable number.
TG-2000A can control up to 40 AE-200E/AE-50E/EW-50E or AE-200E without AE-50E/EW-50E connection.

10-4-3-6. AE-200E + AE-50E/EW-50E
AE-200E can control max. 200 indoor units/via AE-50E/EW-50E.

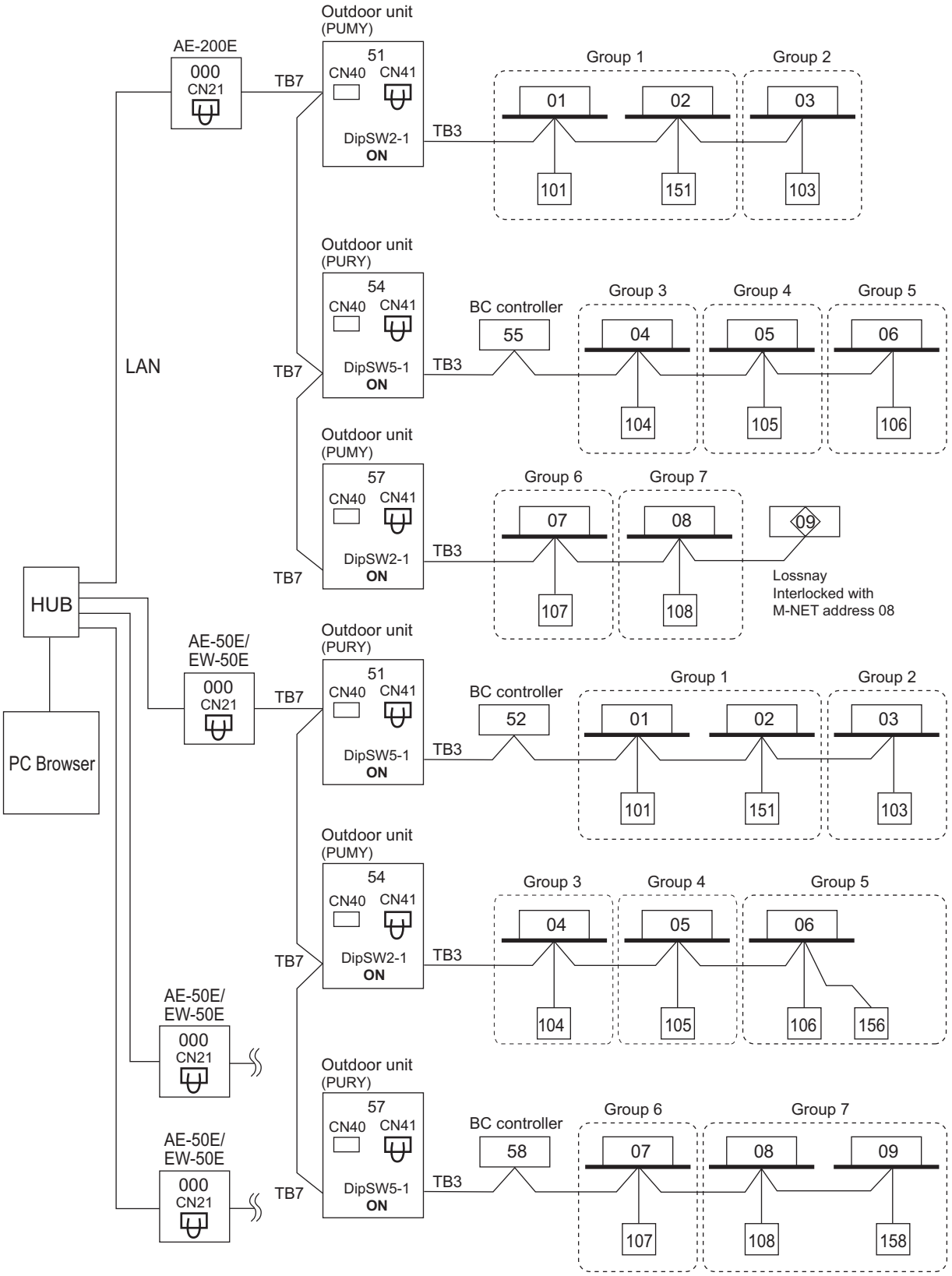

10-4-3-7. LM-AP

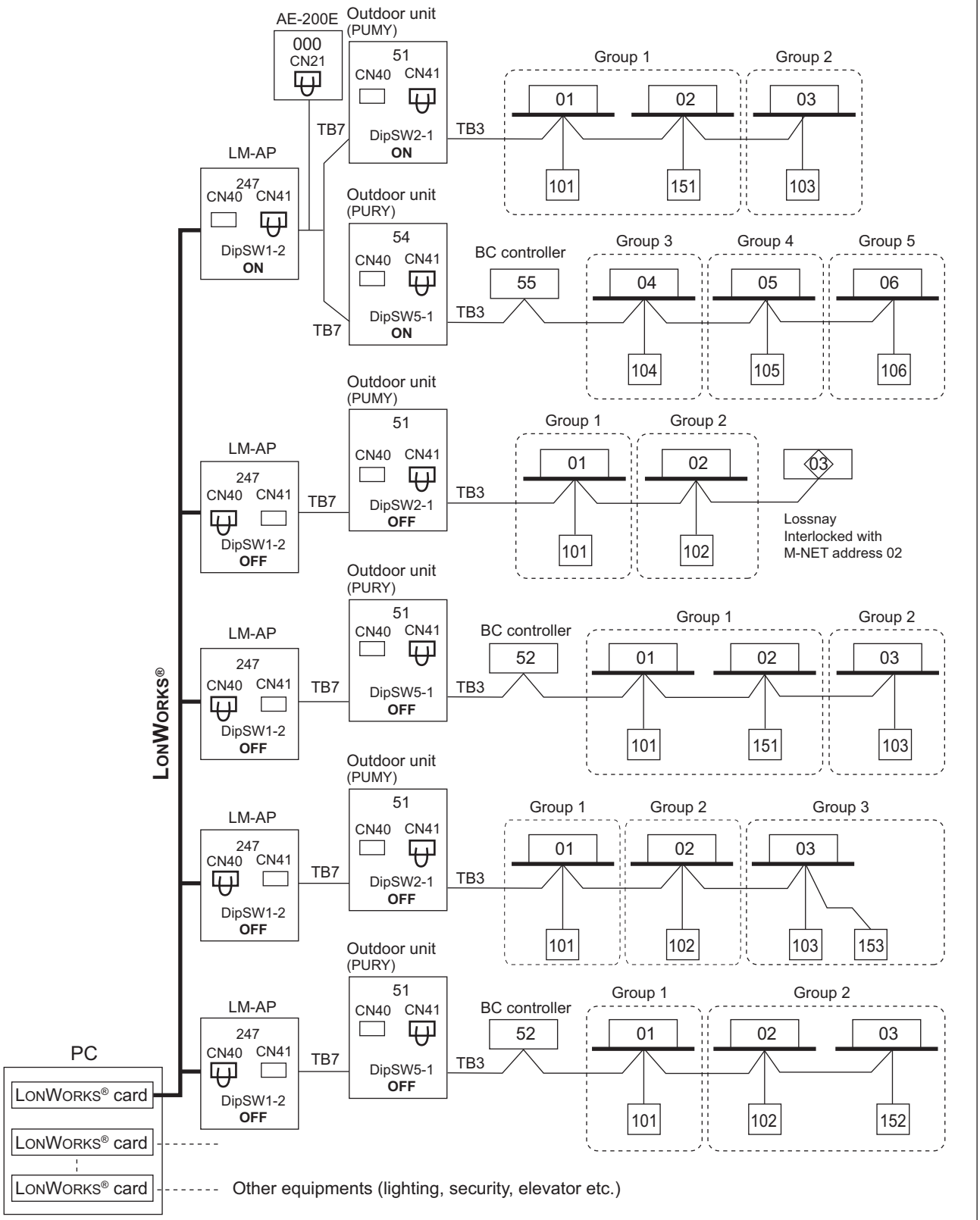

NOTE

- LM-AP can control 50 indoor units.
- It is necessary to turn on the DipSW1-2 on the LM-AP control board and the DipSW2-1 on the outdoor unit (heat source unit) control board with centralized controller (Power supply unit).
- It is necessary to change the connector to CN40 on the LM-AP control board without centralized controllers (Power supply unit).

10-4-3-8. BM ADAPTER

BM ADAPTER can transmit for max. 50 indoor units;
Change Jumper from CN41 to CN40 to activate power supply to BM ADAPTER itself for those BM ADAPTER connected without the power supply unit.

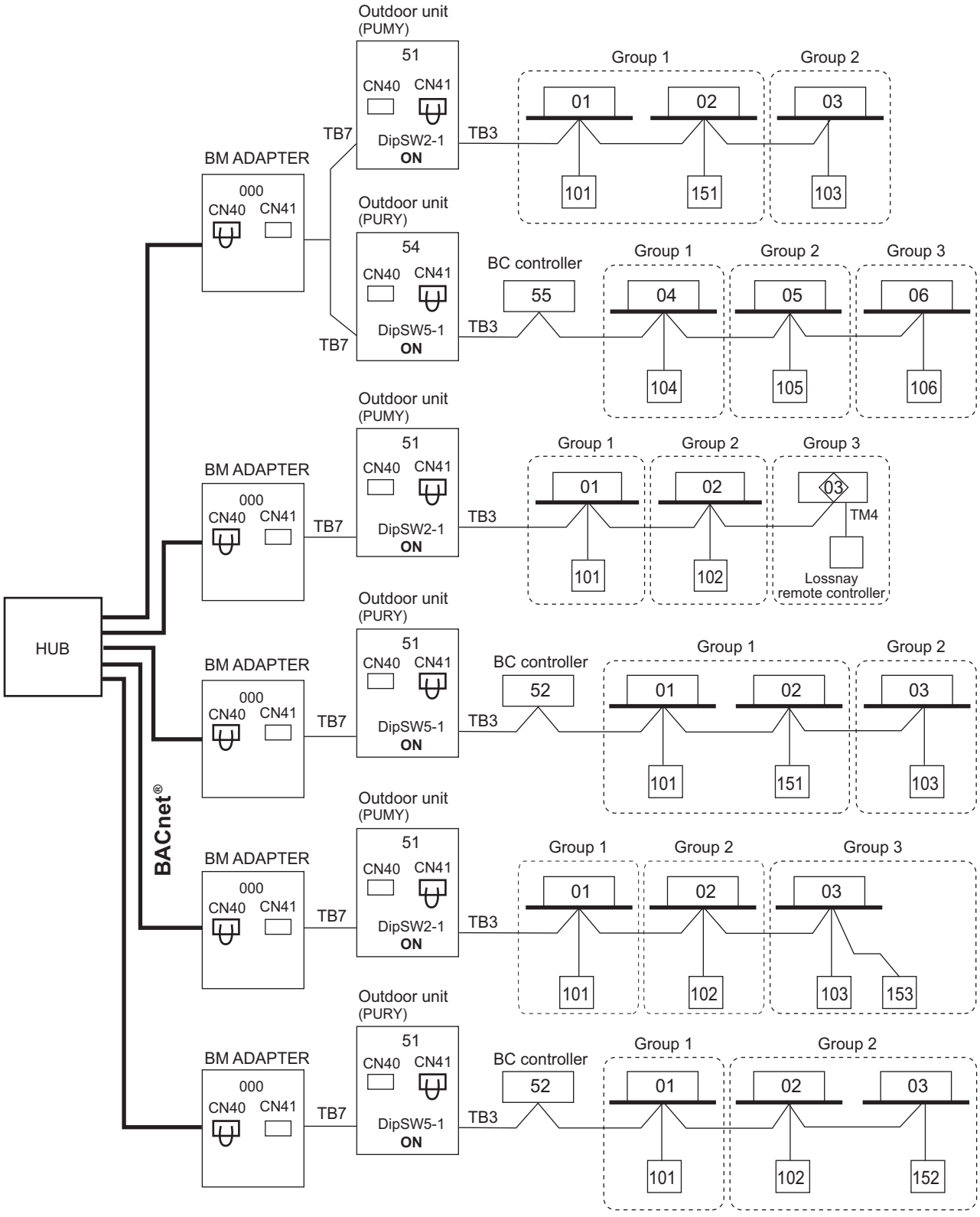

10-4-3-9. BM ADAPTER+PAC-YG50ECA (Expansion controller)

BM ADAPTER(*1) can transmit for max. 150 indoor units/via expansion controllers (PAC-YG50ECA).
When the dual-set-point function is used, no expansion controllers can be connected, and only up to 50 units can be controlled from each BAC-HD150.

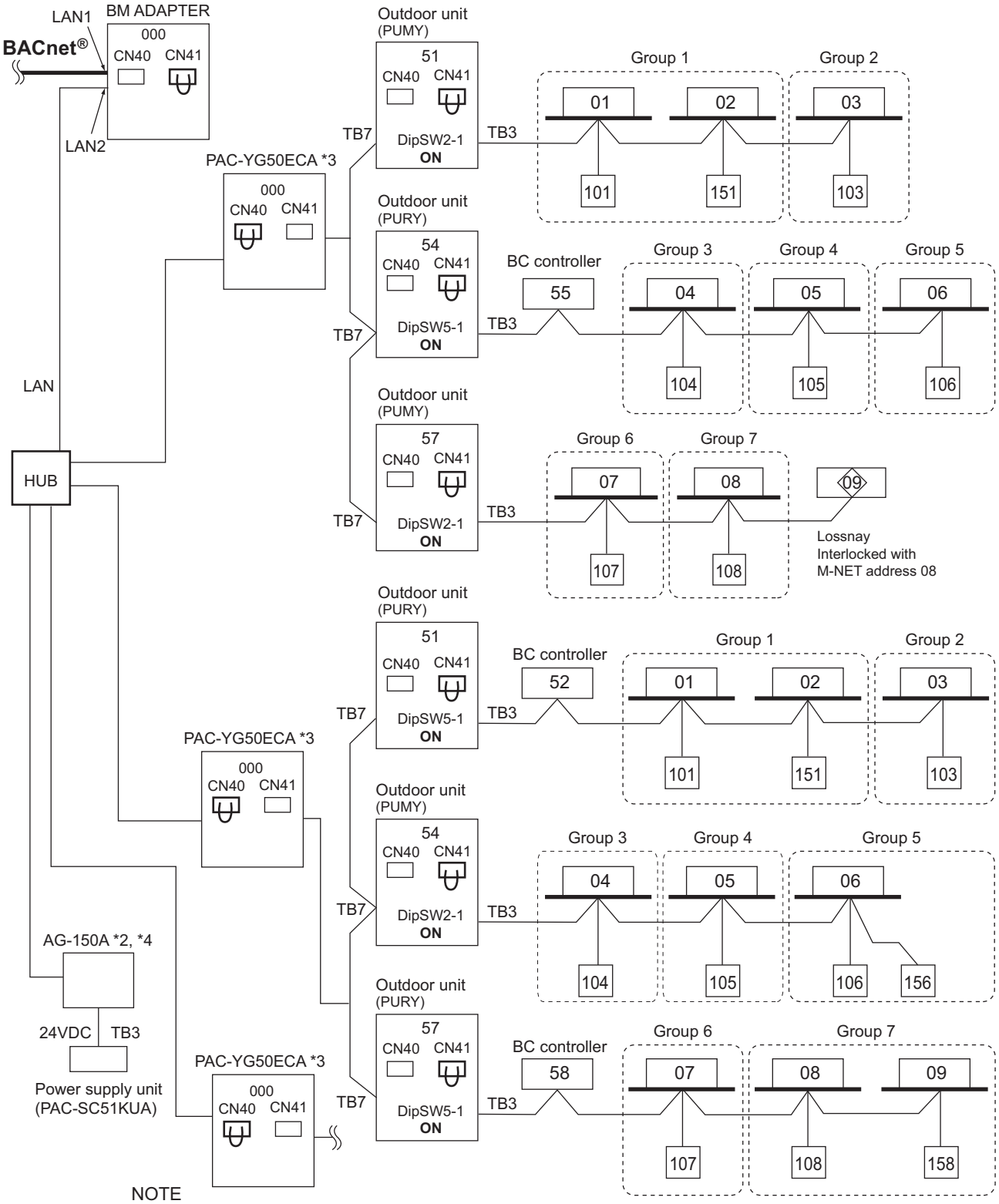

NOTE
•It is not necessary to connect the M-NET transmission line to the TB3 on BM ADAPTER. Leave the power jumper of BM ADAPTER connected to CN41.
*1 BM ADAPTER (Ver.2.00 or later) supports the expansion controller.
*2 AG-150A (Ver.2.30 or later) supports the BM ADAPTER.
*3 PAC-YG50ECA (Ver.1.30 or later) supports the BM ADAPTER.
*4 Consult your dealer for restrictions when connecting both AG-150A and BM ADAPTER to PAC-YG50ECA.

10-4-3-10. BM ADAPTER+AE-200E/AE-50E/EW-50E

BM ADAPTER can transmit for max. 50 indoor units.

One BM ADAPTER is required for one AE-200E/AE-50E/EW-50E.

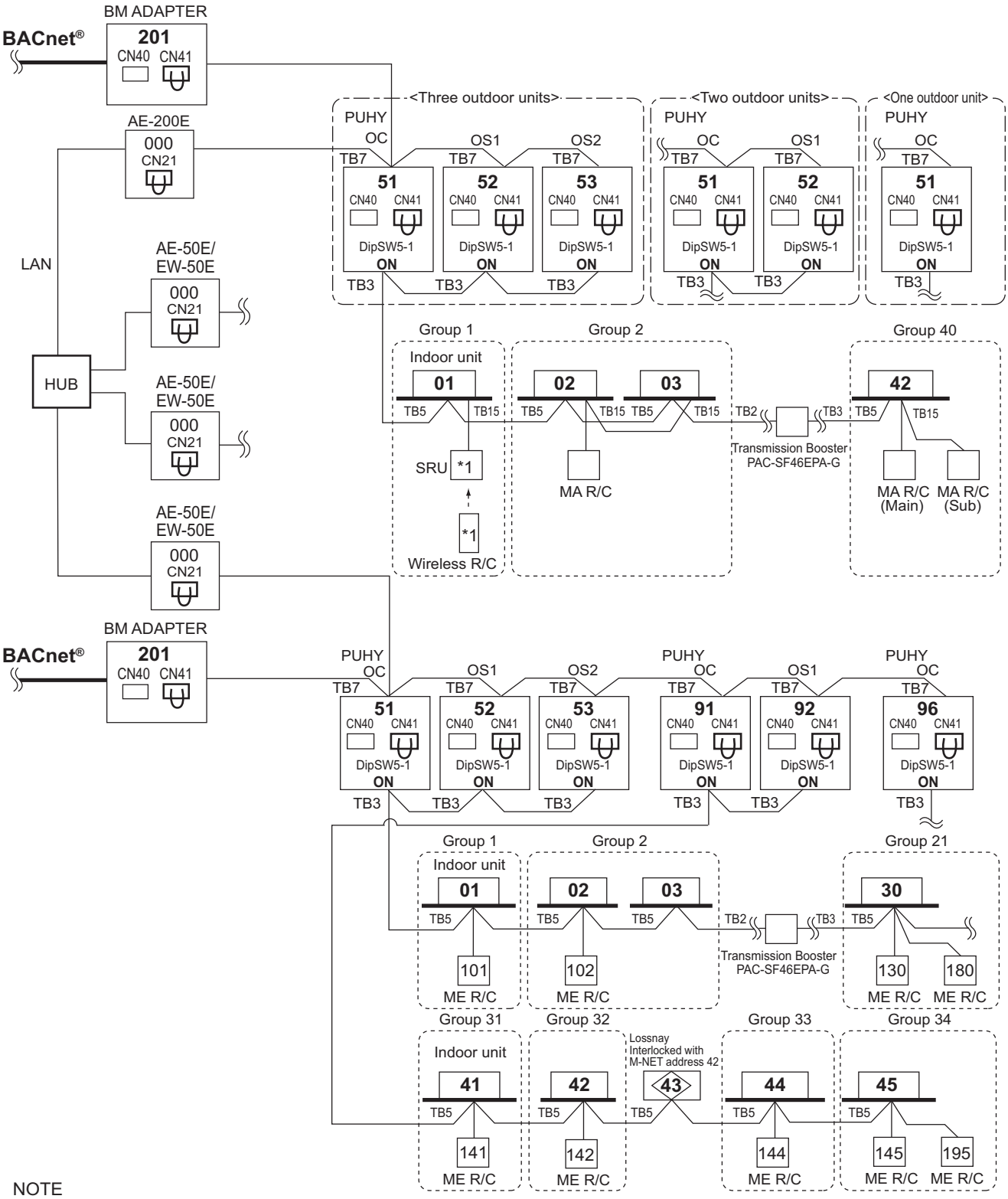

NOTE

•It is not necessary to connect the M-NET transmission line to the TB3 on BM ADAPTER. Leave the power jumper of BM ADAPTER connected to CN41.

*1 For Wireless R/C and Signal receiver unit (SRU), channel 1, 2 and 3 are selectable and should be set to same channel.

*2 Consult your dealer for restrictions when connecting both AE-200E/AE-50E/EW-50E and BM ADAPTER.

*3 When a PAR-CT01MA or PAR-3X MA-Series (X indicates 1, 2…) is connected to a group, no other MA remote controllers can be connected to the same group.

*4 In a system that uses AE-200E and/or AE-50E/EW-50E, each BM-ADAPTER must be connected to the M-NET line.

11-1. R410A Piping material

Refrigerant pipe for CITY MULTI shall be made of phosphorus deoxidized copper, and has two types.
A. Type-O: Soft copper pipe (annealed copper pipe), can be easily bent with human's hand.
B. Type-1/2H pipe: Hard copper pipe (Straight pipe), being stronger than Type-O pipe of the same radical thickness.

The maximum operation pressure of R410A air conditioner is 4.30 MPa [623psi]. The refrigerant piping should ensure the safety under the maximum operation pressure. MITSUBISHI ELECTRIC recommends pipe size as Table1, or You shall follow the local industrial standard. Pipes of radical thickness 0.7mm or less shall not be used.

Table 1. Copper pipe size and radial thickness for R410A CITY MULTI.

Size (mm)	Size (inch)	Radial thickness (mm)	Radial thickness (mil)	Pipe type
ø6.35	ø1/4"	0.8	[32]	Type-O
ø9.52	ø3/8"	0.8	[32]	Type-O
ø12.7	ø1/2"	0.8	[32]	Type-O
ø15.88	ø5/8"	1.0	[40]	Type-O
ø19.05	ø3/4"	1.2	[48]	Type-O
ø19.05	ø3/4"	1.0	[40]	Type-1/2H or H
ø22.2	ø7/8"	1.0	[40]	Type-1/2H or H
ø25.4	ø1"	1.0	[40]	Type-1/2H or H
ø28.58	ø1-1/8"	1.0	[40]	Type-1/2H or H
ø31.75	ø1-1/4"	1.1	[44]	Type-1/2H or H
ø34.93	ø1-3/8"	1.2	[48]	Type-1/2H or H
ø41.28	ø1-5/8"	1.4	[56]	Type-1/2H or H

* For pipe sized ø19.05 (3/4") for R410A air conditioner, choice of pipe type is up to you.
* The figures in the radial thickness column are based on the Japanese standards and provided only as a reference. Use pipes that meet the local standards.

Flare

Due to the relative higher operation pressure of R410A compared to R22, the flare connection should follow dimensions mentioned below so as to achieve enough the air-tightness.

Flare pipe	Pipe size	A (For R410A) (mm[in.])
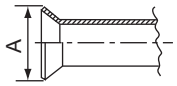	ø6.35 [1/4"]	9.1
	ø9.52 [3/8"]	13.2
	ø12.70 [1/2"]	16.6
	ø15.88 [5/8"]	19.7
	ø19.05 [3/4"]	24.0

Flare nut	Pipe size	B (For R410A) (mm[in.])
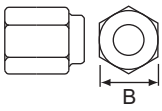	ø6.35 [1/4"]	17.0
	ø9.52 [3/8"]	22.0
	ø12.70 [1/2"]	26.0
	ø15.88 [5/8"]	29.0
	ø19.05 [3/4"]	36.0

11-2. Piping Design

11-2-1. Use of the existing refrigerant piping

⚠ WARNING

Before operating the compressor, make sure the refrigerant pipes are properly installed.

• Operating the compressor without the refrigerant pipes properly being connected and with the stop (ball) valve open, the compressor may suck in air, raising the pressure inside the refrigerant cycle abnormally high and resulting in pipe bursting and personal injury.

• Adequately insulate the liquid and gas refrigerant pipes to keep condensation from dripping.
• Provide additional insulation on the refrigerant pipes as necessary to keep condensation from forming on the insulation surface.
(Insulating material···Heat-resistance temperature: 120°C; Thickness: 15 mm or greater)
* Installation of the unit in high-temperature high-humidity conditions, such as in the ceiling of the top floor, may require additional insulation.
• Insulate refrigerant pipes with heat-resistant polyethylene foam and without leaving any gap between indoor unit and insulating material or between insulating materials. (Exposed pipes may cause condensation and pose burn hazard.)
• Keep the piping length within the limits, and charge the required amount of refrigerant (R410A).
* Before charging refrigerant, evacuate the extended piping and the indoor units, and charge refrigerant through the stop valve (applicable when the unit is stopped). When charging refrigerant through the check valve on the suction side, use a safety charger to prevent liquid refrigerant from being inhaled (applicable when the unit is operated).
* When charging refrigerant, record the amount of refrigerant charged in the relevant section of the maintenance manual (attached to the product).

• Determine the reusability of the existing piping, using the flowchart below.
• If the diameter of the existing piping differs from the standard diameter, check the reusability of the piping and restrictive conditions for reuse.

Cautionary notes on reusing the existing piping

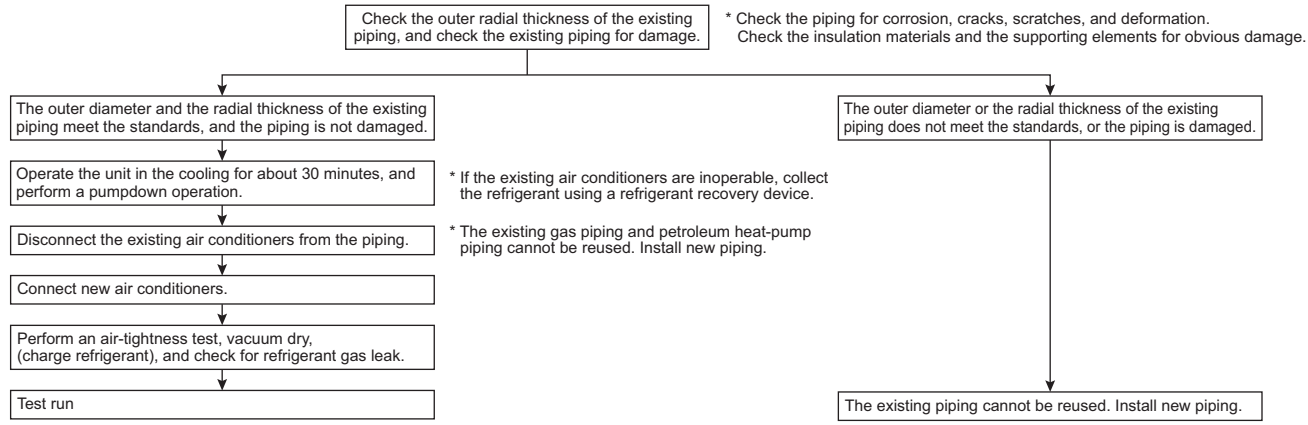

Connecting non-standard diameter pipes

• The following restrictions apply when using pipes with a diameter different from the standard recommended size.

Usability of pipes with non-standard diameters

• Main pipe size

	Outside diameter(mm)	Radial thickness	P112	P125	P140	P200
Gas pipe	ø12.7	t 0.8	NA	NA	NA	NA
	ø15.88	t 1.0	A	A	A	NA
	ø19.05	t 1.0	C	C	C	A
	ø22.2	t 1.0	NA	NA	NA	B
	ø28.58 or greater	t 1.0 or greater	NA	NA	NA	NA
Liquid pipe	ø9.52	t 0.8	A	A	A	A
	ø12.7	t 0.8	D	D	D	D
	ø15.88	t 1.0	D	D	D	D
	ø19.05 or greater	t 1.0 or greater	NA	NA	NA	NA

A: Standard piping
B: Usable (with no loss of performance)
C: Usable (with loss of performance), Set the SW6-1 from OFF to ON.
D: Usable (Restrictions on refrigerant charge apply.)
NA: Unusable

• Size of the piping after branching and up to indoor units

	Outside diameter(mm)	Radial thickness	P10	P15	P20	P25	P32	P40	P50	P63	P71	P80	P100	P125	P140	P200
Gas pipe	ø12.7	t 0.8	A	A	A	A	A	A	A	C	C	C	C	C	C	NA
	ø15.88	t 1.0	NA	NA	NA	NA	NA	B	B	A	A	A	A	A	A	NA
	ø19.05	t 1.0	NA	NA	NA	NA	NA	NA	NA	NA	B	B	B	B	B	A
	ø22.2	t 1.0	NA	NA	NA	NA	NA	NA	NA	NA	NA	NA	NA	NA	NA	B
	ø25.4	t 1.0	NA	NA	NA	NA	NA	NA	NA	NA	NA	NA	NA	NA	NA	NA
	ø28.58	t 1.0	NA	NA	NA	NA	NA	NA	NA	NA	NA	NA	NA	NA	NA	NA
Liquid pipe	ø6.35	t 0.8	A	A	A	A	A	A	A	15 m or less	NA	NA	NA	NA	NA	NA
	ø9.52	t 0.8	D	D	D	D	D	D	D	A	A	A	A	A	A	A
	ø12.7	t 1.0	NA	NA	NA	NA	NA	NA	NA	D	D	D	D	D	D	D
	ø15.88	t 1.0	NA	NA	NA	NA	NA	NA	NA	NA	NA	NA	NA	NA	NA	NA
	ø19.05	t 1.0	NA	NA	NA	NA	NA	NA	NA	NA	NA	NA	NA	NA	NA	NA

Pipe diameter and radial thickness Note: For pipes with a diameter of ø22.2 and up, use 1/2-H or H-material.

Outside diameter (mm)	ø6.35	ø9.52	ø12.7	ø15.88	ø19.05	ø22.2	ø25.4	ø28.58
Radial thickness (mm)	0.8	0.8	0.8	1.0	1.0	1.0	1.0	1.0

Restrictions on extending piping/Amount of refrigerant to be charged (REPLACE units)

When reusing the existing piping, calculate the amount of refrigerant to be charged using the formula below. The existing piping is usable if the result of the calculation below is less than 10 kg. If the calculation result is at or above 10 kg, use new piping. When reusing the existing piping, charge the amount of refrigerant required for the piping and for the indoor units.

• Calculating the amount of refrigerant to be charged based on pipe size and length

Total length of ø15.88 liquid pipes × 0.20 (m) × 0.20 (kg/m)	+	Total length of ø12.7 liquid pipes × 0.092 (m) × 0.092 (kg/m)	+	Total length of ø9.52 liquid pipes × 0.05 (m) × 0.05 (kg/m)	+	Total length of ø6.35 liquid pipes × 0.019 (m) × 0.019 (kg/m)	=	Amount of additional refrigerant to be charged (REPLACE units) (kg)

• Calculating the amount of refrigerant to be charged based on indoor unit capacity

PUMY-P112-140

Total capacity index of the connected indoor units	Amount of refrigerant to be charged
~ 8.0kW	1.5kg
8.1kW ~ 16.0kW	2.5kg
16.1kW ~	3.0kg

PUMY-P200

Total capacity index of the connected indoor units	Amount of refrigerant to be charged
~ 16.0kW	2.5kg
16.1kW ~ 25.0kW	3.0kg
25.1kW ~	3.5kg

11-2-2. PUMY-P112, 125, 140VKM5/YKM(E)4 Piping

Line-Branch Method
Connection Examples
(Connecting to 4 Indoor Units)

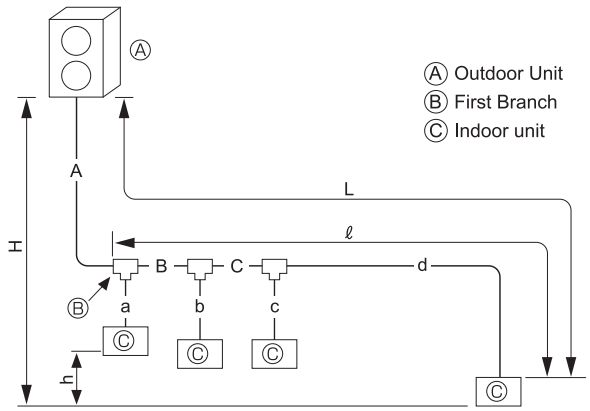

Permissible Length	Total Piping Length		A+B+C+a+b+c+d ≦ 300 m
	Farthest Piping Length	(L)	A+B+C+d ≦ 150 m
	Farthest Piping Length After First Branch	(ℓ)	B+C+d ≦ 30 m
Permissible High/Low Difference	High/Low Difference in Indoor/Outdoor Section	(H)	The outdoor unit is upper: 50 meters or less The outdoor unit is lower: 40 meters or less (30 meters or less if PKFY-P10/15/20/25/32VLM, PFFY-P*VKM, PFFY-P*VCM, PFFY-P*VL* type of indoor units are included.)
	High/Low Difference in Indoor/Indoor Section	(h)	15 meters or less

■ **Selecting the Refrigerant Branch Kit**

Use an optional branch piping kit (CMY-Y62-G-E).

■ **Select Each Section of Refrigerant Piping**

(1) Section From Outdoor Unit to First Branch (A)
(2) Sections From Branch to Indoor Unit (a, b, c, d)
(3) Section From Branch to Branch (B, C)

Each Section of Piping

Select the size from the table to the right.

(1) Refrigerant Piping Diameter In Section From Outdoor Unit to First Branch(Outdoor Unit Piping Diameter)

Model	Piping Diameter (mm)	
PUMY-P112 PUMY-P125 PUMY-P140	Liquid Pipe	ø9.52
	Gas Pipe	ø15.88

(2) Refrigerant Piping Diameter In Section From Branch to Indoor Unit (Indoor Unit Piping Diameter)

Model	Piping Diameter (mm)	
– 50	Liquid Pipe	ø6.35
	Gas Pipe	ø12.7
63 – 140	Liquid Pipe	ø9.52
	Gas Pipe	ø15.88

(3) Refrigerant Piping Diameter In Section From Branch to Branch

Liquid Line (mm)	Gas Line (mm)
ø9.52	ø15.88

Note:
When connecting the CONNECTION KIT (PAC-LV11M-J) and an M-series indoor unit, refer to the installation manual for the CONNECTION KIT when selecting the pipe size and piping length.

■ **Additional refrigerant charge**

Refer to “11-3. Refrigerant charging calculation”.

<table>
<tr><td colspan="2">Header-Branch Method
Connection Examples
(Connecting to 4 Indoor Units)</td><td> 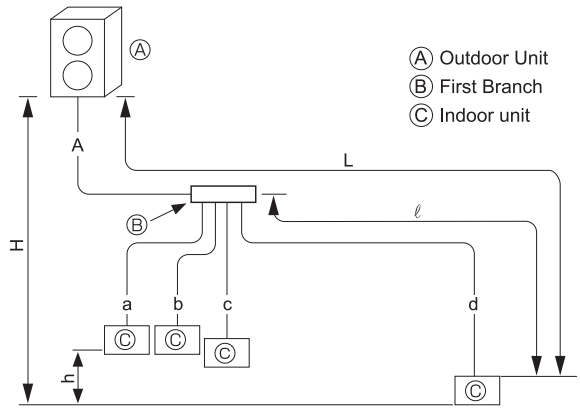
</td></tr>
<tr><td rowspan="3">Permissible Length</td><td>Total Piping Length</td><td>A+a+b+c+d ≦ 300 m</td></tr>
<tr><td>Farthest Piping Length (L)</td><td>A+d ≦ 150 m</td></tr>
<tr><td>Farthest Piping Length After First Branch (ℓ)</td><td>d is 30 meters or less</td></tr>
<tr><td rowspan="2">Permissible High/Low Difference</td><td>High/Low Difference in Indoor/Outdoor Section (H)</td><td>The outdoor unit is upper: 50 meters or less
The outdoor unit is lower: 40 meters or less (30 meters or less if PKFY-P10/15/20/25/32VLM, PFFY-P*VKM, PFFY-P*VCM, PFFY-P*VL* type of indoor units are included.)</td></tr>
<tr><td>High/Low Difference in Indoor/Indoor Section (h)</td><td>15 meters or less</td></tr>
<tr><td colspan="2">■ Selecting the Refrigerant Branch Kit</td><td>Please select branching kit, which is sold separately, from the table below.
(The kit comprises sets for use with liquid pipes and for use with gas pipes.)
<table>
<tr><td>Branch header (4 branches)</td><td>Branch header (8 branches)</td></tr>
<tr><td>CMY-Y64-G-E</td><td>CMY-Y68-G-E</td></tr>
</table></td></tr>
<tr><td colspan="2">■ Select Each Section of Refrigerant Piping
(1) Section From Outdoor Unit to First Branch (A)
(2) Sections From Branch to Indoor Unit (a, b, c, d)
} Each Section of Piping
Select the size from the table to the right.</td><td>(1) Refrigerant Piping Diameter In Section From Outdoor Unit to First Branch (Outdoor Unit Piping Diameter)
<table>
<tr><td>Model</td><td colspan="2">Piping Diameter (mm)</td></tr>
<tr><td rowspan="2">PUMY-P112
PUMY-P125
PUMY-P140</td><td>Liquid Pipe</td><td>ø9.52</td></tr>
<tr><td>Gas Pipe</td><td>ø15.88</td></tr>
</table>
(2) Refrigerant Piping Diameter In Section From Branch to Indoor Unit (Indoor Unit Piping Diameter)
<table>
<tr><td>Model</td><td colspan="2">Piping Diameter (mm)</td></tr>
<tr><td rowspan="2">– 50</td><td>Liquid Pipe</td><td>ø6.35</td></tr>
<tr><td>Gas Pipe</td><td>ø12.7</td></tr>
<tr><td rowspan="2">63 – 140</td><td>Liquid Pipe</td><td>ø9.52</td></tr>
<tr><td>Gas Pipe</td><td>ø15.88</td></tr>
</table>
Note: When connecting the CONNECTION KIT (PAC-LV11M-J) and an M-series indoor unit, refer to the installation manual for the CONNECTION KIT when selecting the pipe size and piping length.</td></tr>
<tr><td colspan="2">■ Additional refrigerant charge</td><td>Refer to “11-3. Refrigerant charging calculation”.</td></tr>
</table>

Method of Combined Branching of Lines and Headers
Connection Examples
(Connecting to 5 Indoor Units)

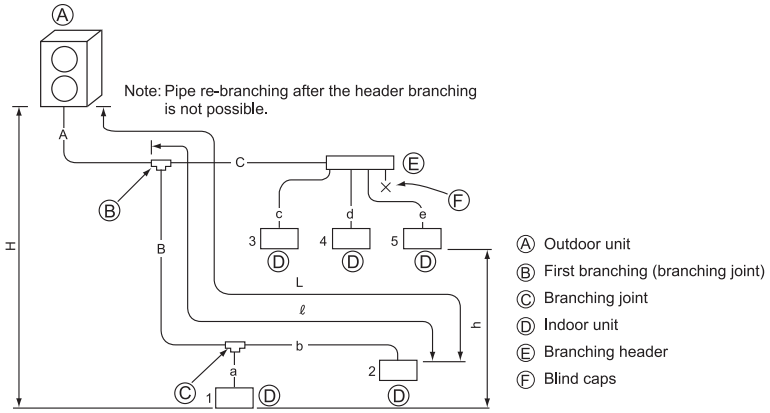

Permissible Length	Total Piping Length		A+B+C+a+b+c+d+e is 300 meters or less
	Farthest Piping Length	(L)	A+B+b is 150 meters or less
	Farthest Piping Length After First Branch	(ℓ)	B+b is 30 meters or less
Permissible High/Low Difference	High/Low Difference in Indoor/Outdoor Section	(H)	The outdoor unit is upper: 50 meters or less The outdoor unit is lower: 40 meters or less (30 meters or less if PKFY-P10/15/20/25/32VLM, PFFY-P*VKM, PFFY-P*VCM, PFFY-P*VL* type of indoor units are included.)
	High/Low Difference in Indoor/Indoor Section	(h)	15 meters or less

■ **Selecting the Refrigerant Branch Kit**

Please select branching kit, which is sold separately, from the table below.
(The kit comprises sets for use with liquid pipes and for use with gas pipes.)

Branch Joint	Branch Header (4 branches)	Branch Header (8 branches)
CMY-Y62-G-E	CMY-Y64-G-E	CMY-Y68-G-E

■ **Select Each Section of Refrigerant Piping**

(1) Section From Outdoor Unit to First Branch (A)
(2) Sections From Branch to Indoor Unit (a, b, c, d, e)
(3) Section From Branch to Branch (B, C)

Each Section of Piping

Select the size from the table to the right.

(1) Refrigerant Piping Diameter In Section From Outdoor Unit to First Branch(Outdoor Unit Piping Diameter)

Model	Piping Diameter (mm)	
PUMY-P112 PUMY-P125 PUMY-P140	Liquid Pipe	ø9.52
	Gas Pipe	ø15.88

(2) Refrigerant Piping Diameter In Section From Branch to Indoor Unit (Indoor Unit Piping Diameter)

Model number	Piping Diameter (mm)	
– 50	Liquid Pipe	ø6.35
	Gas Pipe	ø12.7
63 – 140	Liquid Pipe	ø9.52
	Gas Pipe	ø15.88

(3) Refrigerant Piping Diameter In Section From Branch to Branch

Liquid Pipe (mm)	Gas Pipe (mm)
ø9.52	ø15.88

Note:
When connecting the CONNECTION KIT (PAC-LV11M-J) and an M-series indoor unit, refer to the installation manual for the CONNECTION KIT when selecting the pipe size and piping length.

■ **Additional refrigerant charge**

Refer to “11-3. Refrigerant charging calculation”.

11-2-3. PUMY-P200YKM2 Piping

<table>
<tr><td colspan="2">Line-Branch Method
Connection Examples
(Connecting to 4 Indoor Units)</td><td> 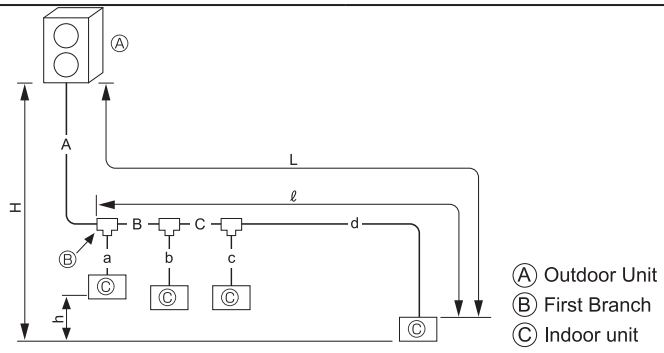
</td></tr>
<tr><td rowspan="3">Permissible Length</td><td>Total Piping Length</td><td>A+B+C+a+b+c+d ≦ 150 m</td></tr>
<tr><td>Farthest Piping Length (L)</td><td>A+B+C+d ≦ 80 m</td></tr>
<tr><td>Farthest Piping Length After First Branch (ℓ)</td><td>B+C+d ≦ 30 m</td></tr>
<tr><td rowspan="2">Permissible High/Low Difference</td><td>High/Low Difference in Indoor/Outdoor Section (H)</td><td>50 meters or less (If the outdoor unit is lower, 40 meters or less)</td></tr>
<tr><td>High/Low Difference in Indoor/Indoor Section (h)</td><td>15 meters or less</td></tr>
<tr><td colspan="2">■ Selecting the Refrigerant Branch Kit</td><td>Use an optional branch piping kit (CMY-Y62-G-E).</td></tr>
<tr><td colspan="2">■ Select Each Section of Refrigerant Piping
(1) Section From Outdoor Unit to First Branch (A)
(2) Sections From Branch to Indoor Unit (a,b,c,d)
(3) Section From Branch to Branch (B,C)
Each Section of Piping
Select the size from the table to the right.</td><td>(1) Refrigerant Piping Diameter In Section From Outdoor Unit to First Branch(Outdoor Unit Piping Diameter)
<table>
<tr><th rowspan="2">Model</th><th colspan="2">Piping Diameter (mm)</th></tr>
<tr><th>Liquid pipe</th><th>Gas pipe</th></tr>
<tr><td>L ≦ 60m</td><td>ø9.52</td><td rowspan="2">ø19.05</td></tr>
<tr><td>L > 60m</td><td>ø12.7</td></tr>
</table>
(2) Refrigerant Piping Diameter In Section From Branch to Indoor Unit (Indoor Unit Piping Diameter)
<table>
<tr><th>Model number</th><th colspan="2">Piping Diameter (mm)</th></tr>
<tr><td rowspan="2">– 50</td><td>Liquid Line</td><td>ø6.35</td></tr>
<tr><td>Gas Line</td><td>ø12.7</td></tr>
<tr><td rowspan="2">63 – 140</td><td>Liquid Line</td><td>ø9.52</td></tr>
<tr><td>Gas Line</td><td>ø15.88</td></tr>
<tr><td rowspan="2">200</td><td>Liquid Line</td><td>ø9.52</td></tr>
<tr><td>Gas Line</td><td>ø19.05</td></tr>
</table>
(3) Refrigerant Piping Diameter In Section From Branch to Branch
<table>
<tr><th>Total capacity of indoor units</th><th colspan="2">Liquid pipe (mm)</th><th>Gas pipe (mm)</th></tr>
<tr><td rowspan="2">– 16.0kW</td><td>L ≦ 60m</td><td>ø9.52</td><td rowspan="2">ø15.88</td></tr>
<tr><td>L > 60m</td><td>ø12.7</td></tr>
<tr><td rowspan="2">16.1 – 29.1kW</td><td>L ≦ 60m</td><td>ø9.52</td><td rowspan="2">ø19.05</td></tr>
<tr><td>L > 60m</td><td>ø12.7</td></tr>
</table>
Note: When connecting the CONNECTION KIT (PAC-LV11M-J) and an M-series indoor unit, refer to the installation manual for the CONNECTION KIT when selecting the pipe size and piping length.</td></tr>
<tr><td colspan="2">■ Additional refrigerant charge</td><td>Refer to “11-3. Refrigerant charging calculation”.</td></tr>
</table>

Header-Branch Method
Connection Examples
(Connecting to 4 Indoor Units)

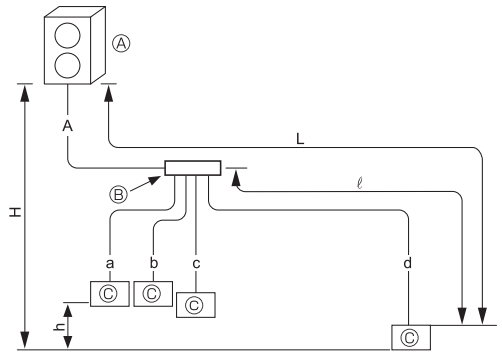

Ⓐ Outdoor Unit
Ⓑ First Branch
Ⓒ Indoor unit

Permissible Length	Total Piping Length	A+a+b+c+d ≦ 150 m
	Farthest Piping Length (L)	A+d ≦ 80 m
	Farthest Piping Length After First Branch (ℓ)	d is 30 meters or less
Permissible High/Low Difference	High/Low Difference in Indoor/Outdoor Section (H)	50 meters or less (If the outdoor unit is lower, 40 meters or less)
	High/Low Difference in Indoor/Indoor Section (h)	15 meters or less

■ **Selecting the Refrigerant Branch Kit**

Please select branching kit, which is sold separately, from the table below.
(The kit comprises sets for use with liquid pipes and for use with gas pipes.)

Branch header (4 branches)	Branch header (8 branches)
CMY-Y64-G-E	CMY-Y68-G-E

■ **Select Each Section of Refrigerant Piping**

(1) Section From Outdoor Unit to First Branch (A)
(2) Sections From Branch to Indoor Unit (a,b,c,d)
} Each Section of Piping

Select the size from the table to the right.

(1) Refrigerant Piping Diameter In Section From Outdoor Unit to First Branch (Outdoor Unit Piping Diameter)

Model	Piping Diameter (mm)	
	Liquid pipe	Gas pipe
L ≦ 60m	ø9.52	ø19.05
L > 60m	ø12.7	

Note: When connecting the CONNECTION KIT (PAC-LV11M-J) and an M-series indoor unit, refer to the installation manual for the CONNECTION KIT when selecting the pipe size and piping length.

(2) Refrigerant Piping Diameter In Section From Branch to Indoor Unit (Indoor Unit Piping Diameter)

Model number	Piping Diameter (mm)	
– 50	Liquid Line	ø6.35
	Gas Line	ø12.7
63 – 140	Liquid Line	ø9.52
	Gas Line	ø15.88
200	Liquid Line	ø9.52
	Gas Line	ø19.05

■ **Additional refrigerant charge**

Refer to “11-3. Refrigerant charging calculation”.

Method of Combined Branching of Lines and Headers
Connection Examples
(Connecting to 5 Indoor Units)

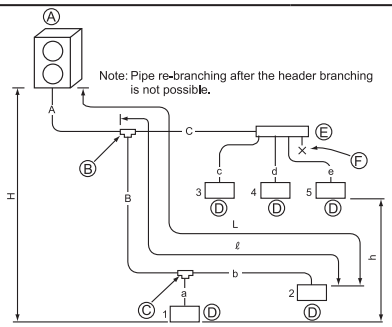

Permissible Length	Total Piping Length		A+B+C+a+b+c+d+e is 150 meters or less
	Farthest Piping Length	(L)	A+B+b is 80 meters or less
	Farthest Piping Length After First Branch	(ℓ)	B+b is 30 meters or less
Permissible High/Low Difference	High/Low Difference in Indoor/Outdoor Section	(H)	50 meters or less (If the outdoor unit is lower, 40 meters or less)
	High/Low Difference in Indoor/Indoor Section	(h)	15 meters or less

■ **Selecting the Refrigerant Branch Kit**

Please select branching kit, which is sold separately, from the table below.
(The kit comprises sets for use with liquid pipes and for use with gas pipes.)

Branch Joint	Branch header (4 branches)	Branch header (8 branches)
CMY-Y62-G-E	CMY-Y64-G-E	CMY-Y68-G-E

■ **Select Each Section of Refrigerant Piping**

(1) Section From Outdoor Unit to First Branch (A)
(2) Sections From Branch to Indoor Unit (a,b,c,d,e)
(3) Section From Branch to Branch (B,C)
} Each Section of Piping

Select the size from the table to the right.

(1) Refrigerant Piping Diameter In Section From Outdoor Unit to First Branch (Outdoor Unit Piping Diameter)

	Piping Diameter (mm)	
	Liquid pipe	Gas pipe
L ≦60m	ø9.52	ø19.05
L > 60m	ø12.7	

(2) Refrigerant Piping Diameter In Section From Branch to Indoor Unit (Indoor Unit Piping Diameter)

Model number	Piping Diameter (mm)	
– 50	Liquid Line	ø6.35
	Gas Line	ø12.7
63 – 140	Liquid Line	ø9.52
	Gas Line	ø15.88
200	Liquid Line	ø9.52
	Gas Line	ø19.05

(3) Refrigerant Piping Diameter In Section From Branch to Branch

Total capacity of indoor units	Liquid pipe (mm)		Gas pipe (mm)
– 16.0kW	L ≦ 60m	ø9.52	ø15.88
	L > 60m	ø12.7	
16.1 – 29.1kW	L ≦ 60m	ø9.52	ø19.05
	L > 60m	ø12.7	

Note: When connecting the CONNECTION KIT (PAC-LV11M-J) and an M-series indoor unit, refer to the installation manual for the CONNECTION KIT when selecting the pipe size and piping length.

■ **Additional refrigerant charge**

Refer to “11-3. Refrigerant charging calculation”.

11-2-4. PUMY-P112, 125, 140VKM5/YKM(E)4 (WHEN USING BRANCH BOX)

Branch box Method
Connection Examples
(Connecting to 8 Indoor Units)

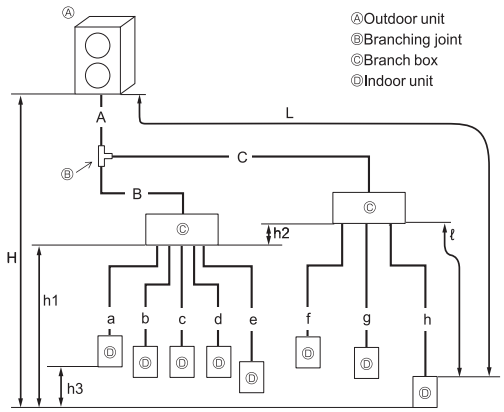

Permissible length (One-way)	Total piping length	A + B + C + a + b + c + d + e + f + g + h ≦ 150 m
	Farthest piping length (L)	A + C + h ≦ 80 m
	Piping length between outdoor unit and branch boxes	A + B + C ≦ 55 m
	Farthest piping length after branch box (ℓ)	ℓ ≦ 25m
	Total piping length between branch boxes and indoor units	a + b + c + d + e + f + g + h ≦ 95 m
Permissible height difference (One-way)	In indoor/outdoor section (H)*1	H ≦ 50 m (In case of that outdoor unit is set higher than indoor unit)
		H ≦ 40 m (In case of that outdoor unit is set lower than indoor unit)
	In branch box/indoor unit section (h1)	h1 + h2 ≦15 m
	In each branch unit (h2)	h2 ≦ 15 m
	In each indoor unit (h3)	h3 ≦ 12 m
Number of bends		≦ 15

*1 Branch box should be placed within the level between the outdoor unit and indoor units.

■ **Select Each Section of Refrigerant Piping**

(1) Section From Outdoor Unit to Branch box (A, B, C)
(2) Sections From Branch box to Indoor Unit (a to h)
} Each Section of Piping

Select the size from the table to the right.

(1) Refrigerant Piping Diameter In Section From Outdoor Unit to Branch box (Outdoor Unit Piping Diameter)

Model	Piping Diameter (mm)	
PUMY-P112 PUMY-P125 PUMY-P140	Liquid Line	ø9.52
	Gas Line	ø15.88

(2) Refrigerant Piping Diameter In Section From Branch box to Indoor Unit (Indoor Unit Piping Diameter)

Indoor unit series	Model number	A Liquid pipe (mm)	B Gas pipe (mm)
M series or S series	15 – 42	ø6.35	ø9.52
	50	ø6.35	ø12.7
	60	ø6.35	ø15.88
	71	ø9.52	ø15.88
P series	35,50	ø6.35	ø12.7
	60 – 100	ø9.52	ø15.88

■ **Additional refrigerant charge**

Refer to “11-3. Refrigerant charging calculation”.

Mixed Method
Connection Examples
(Connecting to 1 Branch box)

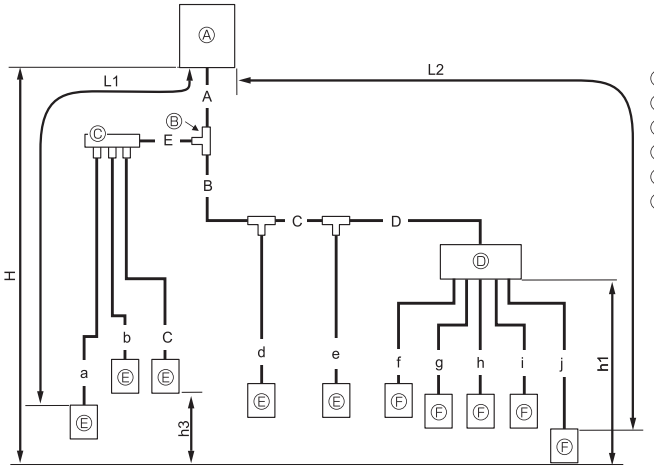

ⒶOutdoor Unit
ⒷFirst joint
ⒸBranch header
ⒹBranch box
ⒺCITY MULTI Indoor unit
ⒻM, S, P series Indoor unit

Permissible length (One-way)	Total piping length	A+B+C+D+E+a+b+c+d+e+f+g+h+i+j ≦ 300 m *2
	Farthest piping length (L1)	A+E+a or A+B+C+e ≦ 85 m
	Farthest piping length. Via Branch box (L2)	A+B+C+D+j ≦ 80 m
	Piping length between outdoor unit and branch box	A+B+C+D ≦ 55 m
	Farthest piping length from the first joint	B+C+D or B+C+e ≦ 30 m
	Farthest piping length after branch box	j ≦ 25 m
	Total piping length between branch boxes and indoor units	f+g+h+i+j ≦ 95 m
Permissible height difference (One-way)	In indoor/outdoor section (H) *1	H ≦ 50 m (In the case of outdoor unit is set higher than indoor unit)
		H ≦ 40 m (In the case of outdoor unit is set lower than indoor unit)
	In branch box/indoor unit section (h1)	h1 ≦ 15 m
	In each indoor unit (h3)	h3 ≦ 12 m
Number of bends		≦ 15

*1 Branch box should be placed within the level between the outdoor unit and indoor units.
*2 When a cylinder unit or hydrobox is connected, the maximum piping length is 150 m.

■ **Selecting the Refrigerant Branch Kit**

Please select branching kit, which is sold separately, from the table below.
(The kit comprises sets for use with liquid pipes and for use with gas pipes.)

Branch header (4 branches)	Branch header (8 branches)
CMY-Y64-G-E	CMY-Y68-G-E

■ **Select Each Section of Refrigerant Piping**

(1) Section From Outdoor Unit to Branch box or Branch header (A to E)
(2) Sections From Branch box or Branch header to Indoor Unit (a to j)

Each Section of Piping

Select the size from the table to the right.

(1) Refrigerant Piping Diameter In Section From Outdoor Unit to Branch box or Branch header (Outdoor Unit Piping Diameter)

Model	Piping Diameter (mm)	
PUMY-P112 PUMY-P125 PUMY-P140	Liquid Line	ø9.52
	Gas Line	ø15.88

(2) Refrigerant Piping Diameter In Section From Branch box or Branch header to Indoor Unit (Indoor Unit Piping Diameter)

Indoor unit series	Model number	A Liquid pipe (mm)	B Gas pipe (mm)
CITY MULTI	10 – 50	ø6.35	ø12.7
	63 – 140	ø9.52	ø15.88
M series or S series	15 – 42	ø6.35	ø9.52
	50	ø6.35	ø12.7
	60	ø6.35	ø15.88
	71	ø9.52	ø15.88
P series	35,50	ø6.35	ø12.7
	60 – 100	ø9.52	ø15.88

Note:
When connecting the CONNECTION KIT (PAC-LV11M-J) and an M-series indoor unit, refer to the installation manual for the CONNECTION KIT when selecting the pipe size and piping length.

■ **Additional refrigerant charge**

Refer to “11-3. Refrigerant charging calculation”.

Mixed Method
Connection Examples
(Connecting to 2 Branch boxes)

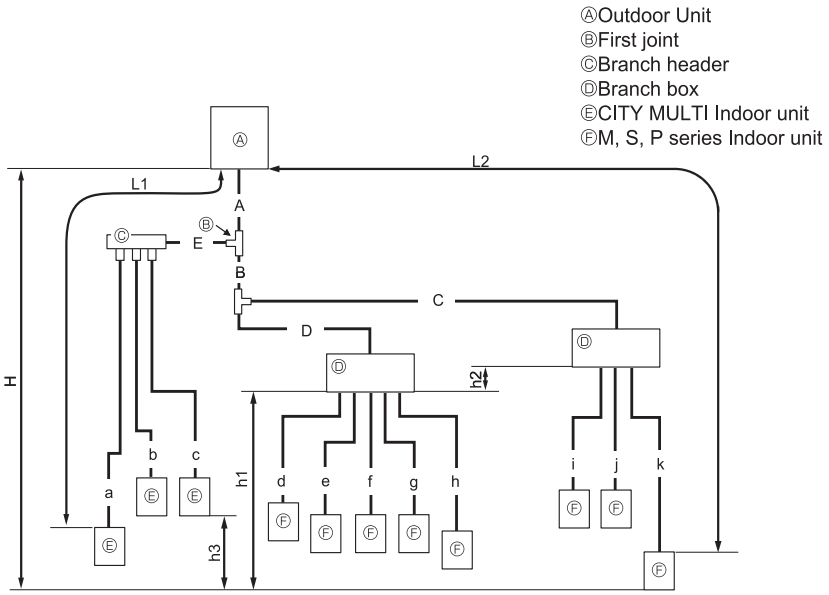

Permissible length (One-way)	Total piping length	A+B+C+D+E+a+b+c+d+e+f+g+h+i+j+k ≦ 240 m *2
	Farthest piping length (L1)	A+E+a ≦ 85 m
	Farthest piping length. Via Branch box (L2)	A+B+C+k ≦ 80 m
	Piping length between outdoor unit and branch boxes	A+B+C+D ≦ 55 m
	Farthest piping length from the first joint	B+C or E+a ≦ 30 m
	Farthest piping length after branch box	k ≦ 25m
	Farthest branch box form outdoor unit	A+B+C ≦ 55m
	Total piping length between branch boxes and indoor units	d+e+f+g+h+i+j+k ≦ 95 m
Permissible height difference (One-way)	In indoor/outdoor section (H) *1	H ≦ 50 m (In the case of outdoor unit is set higher than indoor unit)
		H ≦ 40 m (In the case of outdoor unit is set lower than indoor unit)
	In branch box/indoor unit section (h1)	h1+h2 ≦ 15 m
	In each branch unit (h2)	h2 ≦ 15 m
	In each indoor unit (h3)	h3 ≦ 12 m
Number of bends		≦ 15

*1 Branch box should be placed within the level between the outdoor unit and indoor units.
*2 When a cylinder unit or hydrobox is connected, the maximum piping length is 150 m.

■ **Selecting the Refrigerant Branch Kit**

Please select branching kit, which is sold separately, from the table below.
(The kit comprises sets for use with liquid pipes and for use with gas pipes.)

Branch header (4 branches)	Branch header (8 branches)
CMY-Y64-G-E	CMY-Y68-G-E

■ **Select Each Section of Refrigerant Piping**

(1) Section From Outdoor Unit to Branch box or Branch header (A to E)
(2) Sections From Branch box or Branch header to Indoor Unit (a to k)

Each Section of Piping

Select the size from the table to the right.

(1) Refrigerant Piping Diameter In Section From Outdoor Unit to Branch box or Branch header (Out-door Unit Piping Diameter)

Model	Piping Diameter (mm)	
PUMY-P112 PUMY-P125 PUMY-P140	Liquid Line	ø9.52
	Gas Line	ø15.88

(2) Refrigerant Piping Diameter In Section From Branch box or Branch header to Indoor Unit (Indoor Unit Piping Diameter)

Indoor unit series	Model number	A Liquid pipe (mm)	B Gas pipe (mm)
CITY MULTI	10 – 50	ø6.35	ø12.7
	63 – 140	ø9.52	ø15.88
M series or S series	15 – 42	ø6.35	ø9.52
	50	ø6.35	ø12.7
	60	ø6.35	ø15.88
	71	ø9.52	ø15.88
P series	35, 50	ø6.35	ø12.7
	60 – 100	ø9.52	ø15.88

Note:
When connecting the CONNECTION KIT (PAC-LV11M-J) and an M-series indoor unit, refer to the installation manual for the CONNECTION KIT when selecting the pipe size and piping length.

■ **Additional refrigerant charge**

Refer to “11-3. Refrigerant charging calculation”.

11-2-5. PUMY-P200YKM2 Piping (WHEN USING BRANCH BOX)

Branch box Method
Connection Examples
(Connecting to 8 Indoor Units)

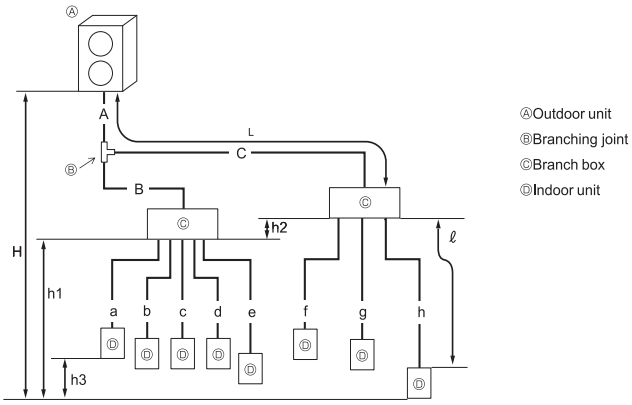

Permissible length (One-way)	Total piping length	A + B + C + a + b + c + d + e + f + g + h ≦ 150 m
	Farthest piping length (L)	A + C + h ≦ 80 m
	Piping length between outdoor unit and branch boxes	A + B + C ≦55 m
	Farthest piping length after branch box (ℓ)	ℓ ≦ 25 m
	Total piping length between branch boxes and indoor units	a + b + c + d + e + f + g + h ≦ 95 m
Permissible height difference (One-way)	In indoor/outdoor section (H)*1	H ≦ 50 m (In the case of that outdoor unit is set higher than indoor unit)
		H ≦ 40 m (In the case of that outdoor unit is set lower than indoor unit)
	In branch box/indoor unit section (h1)	h1 + h2 ≦15 m
	In each branch unit (h2)	h2 ≦ 15 m
	In each indoor unit (h3)	h3 ≦ 12 m
Number of bends		≦ 15

*1 Branch box should be placed within the level between the outdoor unit and indoor units.

■ **Select Each Section of Refrigerant Piping**

(1) Section From Outdoor Unit to Branch box (A, B, C)
(2) Sections From Branch box to Indoor Unit (a to h)

} Each Section of Piping

Select the size from the table to the right.

(1) Refrigerant Piping Diameter In Section From Outdoor Unit to First Branch (Out- door Unit Piping Diameter)

A

	Piping Diameter (mm)	
	Liquid pipe	Gas pipe
L ≦ 20m	ø9.52	ø19.05
L > 20m	ø12.7	

L: The farthest piping length from the outdoor unit to an indoor unit.

B,C

Total capacity of indoor units	Liquid pipe (mm)		Gas pipe (mm)
– 16.0kW	L ≦ 20m	ø9.52	ø15.88
	L > 20m	ø12.7	
16.1 – 29.1kW	L ≦ 20m	ø9.52	ø19.05
	L > 20m	ø12.7	

(2) Refrigerant Piping Diameter In Section From Branch box to Indoor Unit (Indoor Unit Piping Diameter)

Indoor unit series	Model number	Liquid pipe (mm)	B Gas pipe (mm)
M series or S series	– 42	ø6.35 mm	ø9.52 mm
	50	ø6.35 mm	ø12.7 mm
	60	ø6.35 mm	ø15.88 mm
	71–	ø9.52 mm	ø15.88 mm
P series	– 50	ø6.35 mm	ø12.77 mm
	60 –	ø9.52 mm	ø15.88 mm

■ **Additional refrigerant charge**

Refer to “11-3. Refrigerant charging calculation”.

Mixed Method
Connection Examples
(Connecting to 1 Branch box)

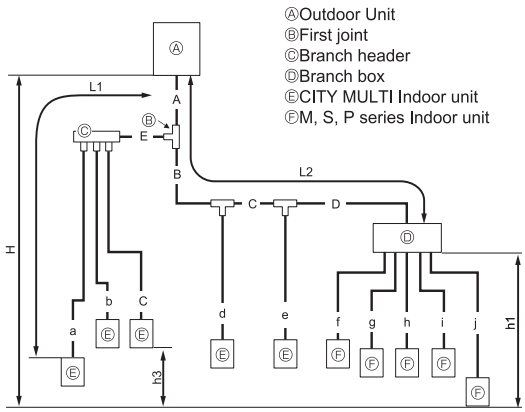

Permissible length (One-way)	Total piping length	A+B+C+D+E+a+b+c+d+e+f+g+h+i+j ≦ 150 m
	Farthest piping length (L1)	A+E+a or A+B+C+e ≦ 80 m
	Farthest piping length. Via Branch box	A+B+C+D+j ≦ 80 m
	Piping length between outdoor unit and branch box	A+B+C+D ≦ 55 m
	Farthest piping length from the first joint	B+C+D or B+C+e ≦ 30 m
	Farthest piping length after branch box	j ≦ 25 m
	Total piping length between branch boxes and indoor units	f+g+h+i+j ≦ 95 m
Permissible height difference (One-way)	In indoor/outdoor section (H)*1	H ≦ 50 m (In the case of outdoor unit is set higher than indoor unit)
		H ≦ 40 m (In the case of outdoor unit is set lower than indoor unit)
	In branch box/indoor unit section (h1)	h1 ≦ 15 m
	In each indoor unit (h3)	h3 ≦ 12 m
Number of bends		≦ 15

*1 Branch box should be placed within the level between the outdoor unit and indoor units.

■ **Selecting the Refrigerant Branch Kit**

Please select branching kit, which is sold separately, from the table below.
(The kit comprises sets for use with liquid pipes and for use with gas pipes.)

Branch header (4 branches)	Branch header (8 branches)
CMY-Y64-G-E	CMY-Y68-G-E

■ **Select Each Section of Refrigerant Piping**

(1) Section From Outdoor Unit to Branch box or Branch header (A to E)
(2) Sections From Branch box or Branch header to Indoor Unit (a to j)

Each Section of Piping

Select the size from the table to the right.

(1) Refrigerant Piping Diameter In Section From Outdoor Unit to Branch box or Branch header (Outdoor Unit Piping Diameter)

A

	Piping Diameter (mm)	
	Liquid pipe	Gas pipe
L1 ≦ 60m and L2 ≦ 20m	ø9.52	ø19.05
L1 > 60m or L2 > 20m	ø12.7	

B to E

Total capacity of indoor units	Liquid pipe (mm)		Gas pipe (mm)
– 16.0kW	L1 ≦ 60m or L2 ≦ 20m	ø9.52	ø15.88
	L1 > 60m or L2 > 20m	ø12.7	
16.1 – 29.1kW	L1 ≦ 60m or L2 ≦ 20m	ø9.52	ø19.05
	L1 > 60m or L2 > 20m	ø12.7	

L1: The farthest piping length from the outdoor unit to an indoor unit.
L2: The farthest piping length for the main pipes from the outdoor unit to the branch box.

(2) Refrigerant Piping Diameter In Section From Branch box or Branch header to Indoor Unit (Indoor Unit Piping Diameter)

Indoor unit series	Model number	Liquid pipe (mm)	Gas pipe (mm)
CITY MULTI	– 50	ø6.35 mm	ø12.7 mm
	63 – 140	ø9.52 mm	ø15.88 mm
	200 –	ø9.52 mm	ø19.05 mm
M series or S series	– 42	ø6.35 mm	ø9.52 mm
	50	ø6.35 mm	ø12.7 mm
	60	ø6.35 mm	ø15.88 mm
	71 –	ø9.52 mm	ø15.88 mm
P series	– 50	ø6.35 mm	ø12.7 mm
	60 –	ø9.52 mm	ø15.88 mm

Note:
When connecting the CONNECTION KIT (PAC-LV11M-J) and an M-series indoor unit, refer to the installation manual for the CONNECTION KIT when selecting the pipe size and piping length.

■ **Additional refrigerant charge**

Refer to “11-3. Refrigerant charging calculation”.

Mixed Method
Connection Examples
(Connecting to 2 Branch boxes)

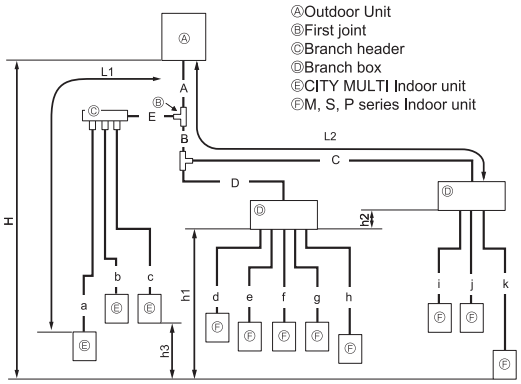

Permissible length (One-way)	Total piping length	A+B+C+D+E+a+b+c+d+e+f+g+h+i+j+k ≦ 150 m
	Farthest piping length (L1)	A+E+a ≦ 80 m
	Farthest piping length. Via Branch box	A+B+C+k ≦ 80 m
	Piping length between outdoor unit and branch boxes	A+B+C+D ≦ 55 m
	Farthest piping length from the first joint	B+C or E+a ≦ 30 m
	Farthest piping length after branch box	k ≦ 25 m
	Farthest branch box from outdoor unit	A+B+C ≦ 55 m
	Total piping length between branch boxes and indoor units	d+e+f+g+h+i+j+k ≦ 95m
Permissible height difference (One-way)	In indoor/outdoor section (H)*1	H ≦ 50 m (In the case of outdoor unit is set higher than indoor unit)
		H ≦ 40 m (In the case of outdoor unit is set lower than indoor unit)
	In branch box/indoor unit section (h1)	h1+h2 ≦ 15 m
	In each branch unit (h2)	h2 ≦ 15 m
	In each indoor unit (h3)	h3 ≦ 12 m
Number of bends		≦ 15

*1 Branch box should be placed within the level between the outdoor unit and indoor units.

■ **Selecting the Refrigerant Branch Kit**

Please select branching kit, which is sold separately, from the table below.
(The kit comprises sets for use with liquid pipes and for use with gas pipes.)

Branch header (4 branches)	Branch header (8 branches)
CMY-Y64-G-E	CMY-Y68-G-E

■ **Select Each Section of Refrigerant Piping**

(1) Section From Outdoor Unit to Branch box or Branch header (A to E)
(2) Sections From Branch box or Branch header to Indoor Unit (a to k)
} Each Section of Piping

Select the size from the table to the right.

(1) Refrigerant Piping Diameter In Section From Outdoor Unit to Branch box or Branch header (Outdoor Unit Piping Diameter)

A

	Piping Diameter (mm)	
	Liquid pipe	Gas pipe
L1 ≦ 60m and L2 ≦ 20m	ø9.52	ø19.05
L1 > 60m or L2 > 20m	ø12.7	

B to E

Total capacity of indoor units	Liquid pipe (mm)		Gas pipe (mm)
– 16.0kW	L1 ≦ 60m or L2 ≦ 20m	ø9.52	ø15.88
	L1 > 60m or L2 > 20m	ø12.7	
16.1 – 29.1kW	L1 ≦ 60m or L2 ≦ 20m	ø9.52	ø19.05
	L1 > 60m or L2 > 20m	ø12.7	

L1: The farthest piping length from the outdoor unit to an indoor unit.
L2: The farthest piping length for the main pipes from the outdoor unit to the branch box.

(2) Refrigerant Piping Diameter In Section From Branch box or Branch header to Indoor Unit (Indoor Unit Piping Diameter)

Indoor unit series	Model number	Liquid pipe (mm)	Gas pipe (mm)
CITY MULTI	– 50	ø6.35 mm	ø12.7 mm
	63 – 140	ø9.52 mm	ø15.88 mm
	200 –	ø9.52 mm	ø19.05 mm
M series or S series	– 42	ø6.35 mm	ø9.52 mm
	50	ø6.35 mm	ø12.7 mm
	60	ø6.35 mm	ø15.88 mm
	71 –	ø9.52 mm	ø15.88 mm
P series	– 50	ø6.35 mm	ø12.7 mm
	60 –	ø9.52 mm	ø15.88 mm

Note:
When connecting the CONNECTION KIT (PAC-LV11M-J) and an M-series indoor unit, refer to the installation manual for the CONNECTION KIT when selecting the pipe size and piping length.

■ **Additional refrigerant charge**

Refer to “11-3. Refrigerant charging calculation”.

11-3. Refrigerant charging calculation

Additional refrigerant charge

Refrigerant for the extended piping is not included in the outdoor unit when the unit is shipped from the factory. Therefore, charge each refrigerant piping system with additional refrigerant at the installation site. In addition, in order to carry out service, enter the size and length of each liquid pipe and additional refrigerant charge amounts in the spaces provided on the "Refrigerant amount" plate on the outdoor unit.

Calculation of additional refrigerant charge

- Calculate the additional charge using the liquid pipe size and length of the extended piping and total capacity of connected indoor units.
- Calculate the additional refrigerant charge using the procedure below, and charge with the additional refrigerant.
- For amounts less than 0.1 kg, round up the calculated additional refrigerant charge.
  (For example, if the calculated charge is 6.01 kg, round up the charge to 6.1 kg.)

PUMY-P112, 125, 140

<Additional Charge>

Calculation of refrigerant charge

Pipe size Liquid pipe ø6.35	+	Pipe size Liquid pipe ø9.52	+	Total capacity of connected indoor units	Amount for the indoor units
(m) x 19.0 (g/m)		(m) x 50.0 (g/m)		– 8.0kW	1.5kg
				8.1 – 16.0kW	2.5kg
				16.1kW –	3.0kg

Included refrigerant amount when shipped from the factory

Included refrigerant amount
4.8kg

PUMY-P200

<Additional Charge>

Calculation of refrigerant charge

Pipe size Liquid pipe ø6.35	+	Pipe size Liquid pipe ø9.52	+	Pipe size Liquid pipe ø12.7	+	Total capacity of connected indoor units	Amount for the indoor units
(m) x 19.0 (g/m)		(m) x 50.0 (g/m)		(m) x 92.0 (g/m)		– 16.0kW	2.5kg
						16.1 – 25.0kW	3.0kg
						25.1kW –	3.5kg

* When connecting 4 PEFY-P·VMA3 indoor units, use 3.5kg regardless of the amount indicated in the preceding table according to the total capacity.

Included refrigerant amount when shipped from the factory

Included refrigerant amount
7.3kg

Example:

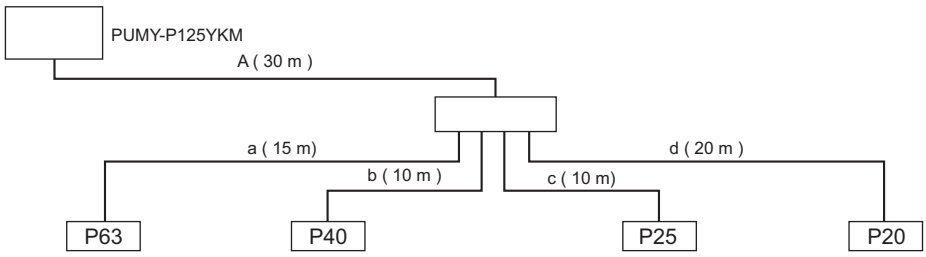

<Example>
Outdoor model: P125

Indoor 1: P63 (7.1kW)	A: ø9.52 30 m	a: ø9.52 15 m
2: P40 (4.5kW)		b: ø6.35 10 m
3: P25 (2.8kW)		c: ø6.35 10 m
4: P20 (2.2kW)		d: ø6.35 20 m

<Calculation example>
Additional refrigerant charge

$$40 \times \frac{19.0}{1000} + 45 \times \frac{50.0}{1000} + 3.0 = 6.1\text{kg (rounded up)}$$

The total length of each liquid line is as follows:
ø9.52: A + a = 30 + 15 = 45 m
ø6.35: b + c + d = 10 + 10 + 20 = 40 m
The total capacity of connected indoor unit is as follows:
7.1 + 4.5 + 2.8 + 2.2 = 16.6

■Maximum refrigerant charge

There is a limit to the amount of refrigerant that can be charged into a unit.
Regardless of the amount yielded by the formula above, observe the maximum refrigerant charge in the table below.

Total index of the outdoor units			P112VKM5	P125VKM5	P140VKM5	P112YKM(E)4	P125YKM(E)4	P140YKM(E)4	P200YKM2
Maximum refrigerant charge	Factory charge	kg	4.8	4.8	4.8	4.8	4.8	4.8	7.3
	Charged on site	kg	13.8	13.8	13.8	13.8	13.8	13.8	13.1
	Total for system	kg	18.6	18.6	18.6	18.6	18.6	18.6	20.4

12-1. Requirement on installation site

12-1-1. General caution

A. Avoid locations exposed to direct sunlight or other sources of heat.
B. Select a location from which noise emitted by the unit will not inconvenience the neighbors.
C. Select a location permitting easy wiring and pipe access to the power source and indoor unit.
D. Avoid locations where combustible gases may leak, be produced, flow, or accumulate.
E. Note that water may drain from the unit during operation.
F. Select a level location that can bear the weight and vibration of the unit.
G. Avoid locations where the unit can be covered by snow. In areas where heavy snow fall is anticipated, special precautions such as raising the installation location or installing a hood on the air intake must be taken to prevent the snow from blocking the air intake or blowing directly against it. This can reduce the airflow and a malfunction may result.
H. Avoid locations exposed to oil, steam, or sulfuric gas.
I. Use the transportation handles of the outdoor unit to transport the unit. If the unit is carried from the bottom, hands or fingers may be pinched.

12-1-2. Installation at windy location.

When installing the outdoor unit on a rooftop or other location unprotected from the wind, situate the air outlet of the unit so that it is not directly exposed to strong winds.Strong wind entering the air outlet may impede the normal airflow and a malfunction may result.
The following shows two examples of precautions against strong winds.
① Install an optional air protect guide if the unit is installed in a location where strong winds from a typhoon, etc. may directly enter the air outlet. (Fig. 12-1-2a)
Ⓐ Air protect guide
② Position the unit so that the air outlet blows perpendicularly to the seasonal wind direction, if possible. (Fig. 12-1-2b)
Ⓑ Wind direction

■PUMY-P112, 125, 140VKM5/YKM(E)4
PUMY-P200YKM2

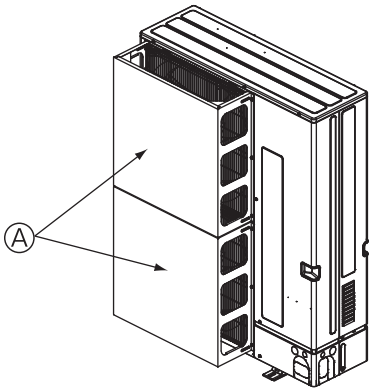

Fig. 12-1-2a

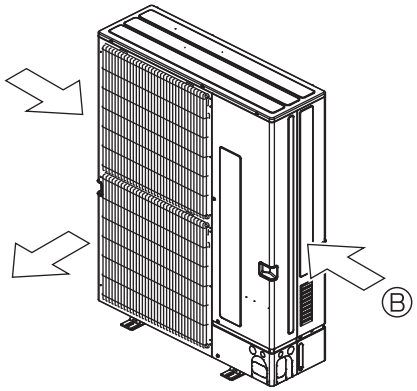

Fig. 12-1-2b

12-1-3. Foundation

A. Be sure to install the unit in a sturdy, level surface to prevent rattling noises during operation. (see Fig. 12-1-3a)

B. Foundation specifications are as follows.

mm [in.]

Thickness of concrete	Weight-bearing capacity	Foundation bolt	Bolt length
120 [4-3/4"]	320 kg [706lbs]	M10 [3/8"]	70 [2-25/32"]

C. Make sure that the length of the foundation bolt is within 30 mm [1-3/16"] of the bottom surface of the base.

D. Secure the base of the unit firmly with four-M10 [3/8"] foundation bolts in sturdy locations.

⚠ Warning:

A. The foundation base should be strong enough to support the outdoor unit, otherwise, it may fall down and cause damage or injures.

B. The unit must be installed according to the instructions in order to minimize the risk of damage from earthquakes, typhoons, or strong winds.

■PUMY-P-VKM5/YKM(E)4, PUMY-P-YKM2

(mm)

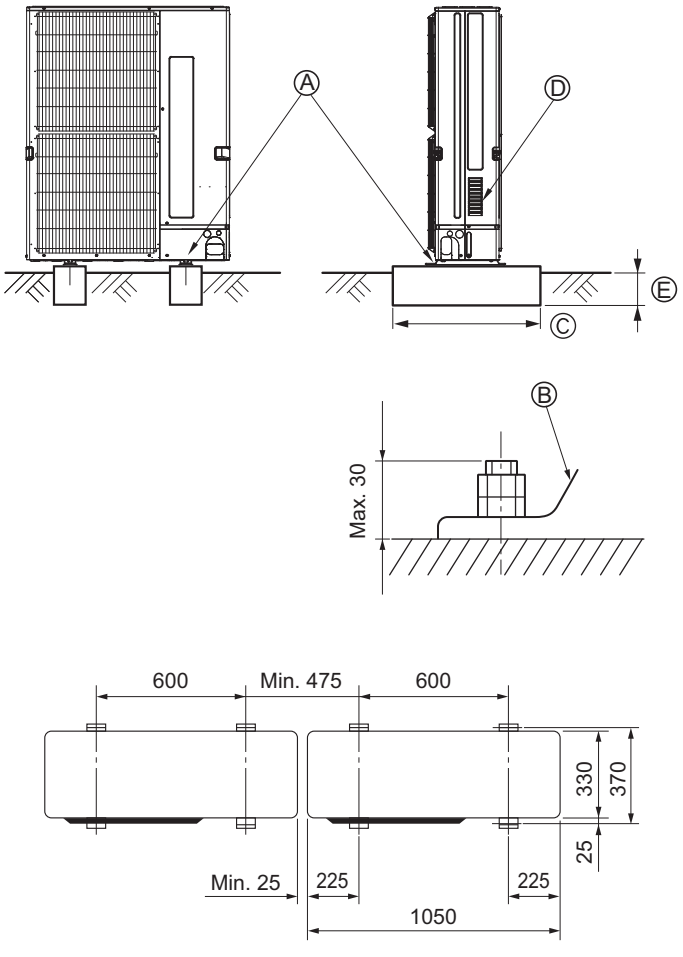

Ⓐ M10 (3/8") bolt
Ⓑ Base
Ⓒ As long as possible.
Ⓓ Vent
Ⓔ Set deep in the ground.

Fig. 12-1-3a

12-2. Spacing

12-2-1. PUMY-P112, 125, 140VKM5/YKM(E)4
PUMY-P200YKM2

(mm)

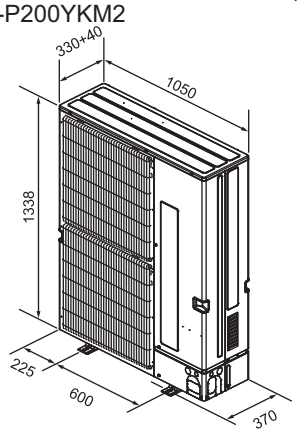

Fig. 12-2-1

12-2-1-1. Spacing individual PUMY-P-VKM5/YKM4(2)/YKME4

Follow Fig. 12-2-2~7 to space individual PUMY-P-VKM5/YKM4(2)/YKME4 at the installation site. mm[in.]

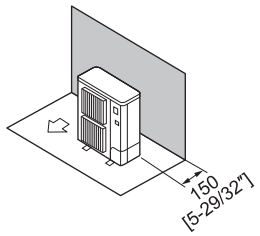

Fig. 12-2-2
Obstacles at rear only

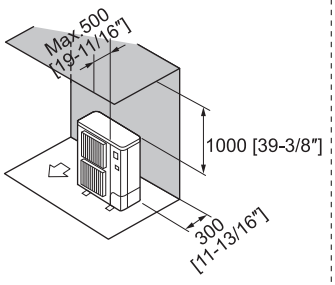

Fig. 12-2-3
Obstacles at rear and above only

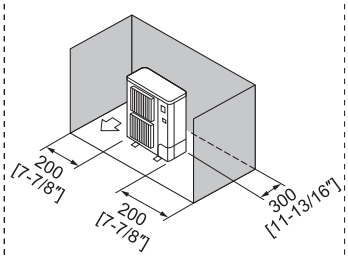

Fig. 12-2-4
Obstacles at rear and sides only

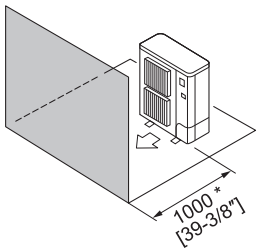

* Using an optional air outlet guide, the clearance >= 500 mm [19-11/16"].

Fig. 12-2-5
Obstacles at front only

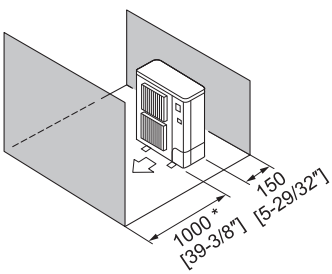

* Using an optional air outlet guide, the clearance >= 500 mm [19-11/16"].

Fig. 12-2-6
Obstacles at front and rear only

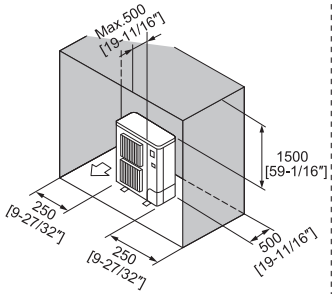

* NO upward airflow outlet guide.

Fig. 12-2-7
Obstacles at rear, sides and above only

12-2-1-2. Spacing grouped PUMY-P-VKM5/YKM4(2)/YKME4

Follow Fig. 4-2-8~13 to space grouped PUMY-P-VKM5/YKM4(2)/YKME4 at the installation site. Leave 25 mm space or more between PUMY-P-VKM5/YKM4(2)/YKME4 units. mm[in.]

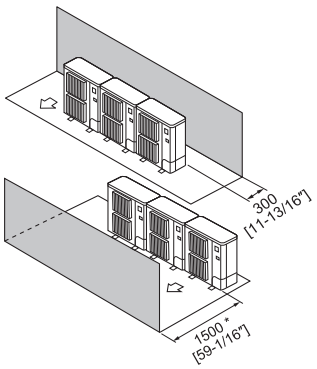

* When using an optional air outlet guide, the clearance is 1000 mm [39-3/8"] or more.

Fig. 12-2-8
Obstacles at rear or front only

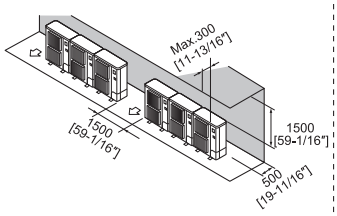

* In case of side-by-side installation, <=3 units;
* Do not install the optional air outlet guides for upward airflow.

Fig. 12-2-9
Obstacles at rear and above only

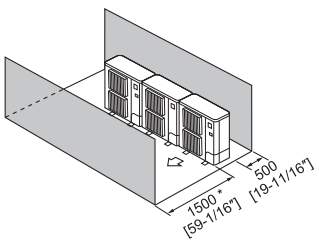

* Using an optional air outlet guide, the clearance >= 1000 mm [39-3/8"].

Fig. 12-2-10
Obstacles at front and rear only

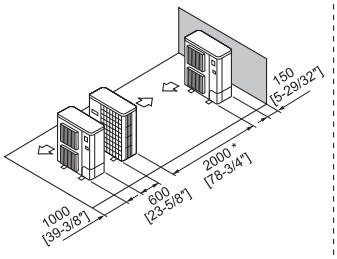

* Using an optional air outlet guide, the clearance >= 1000 mm [39-3/8"].

Fig. 12-2-11
Parallel individuals arrangement

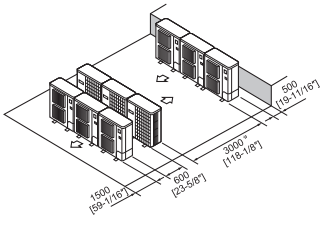

* Using an optional air outlet guide for upward airflow, the clearance >= 1500 mm [59-1/16"].

Fig. 12-2-12
Parallel groups arrangement

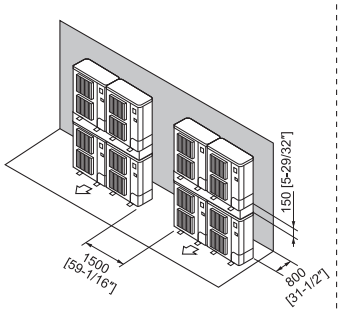

* Stacked layer <= 2 units;
* Side-by-side stacked groups <= 2 groups;

Fig. 12-2-13
Stacked groups arrangement

12-3. Piping direction

PUMY-P112, 125, 140VKM5/YKM(E)4
PUMY-P200YKM2

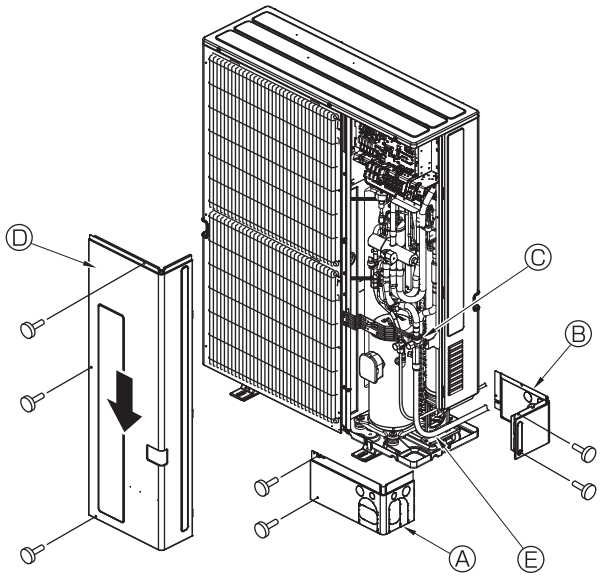

Ⓐ Front piping cover
Ⓑ Piping cover
Ⓒ Stop valve
Ⓓ Service panel
Ⓔ Bend radius : 100 mm - 150 mm

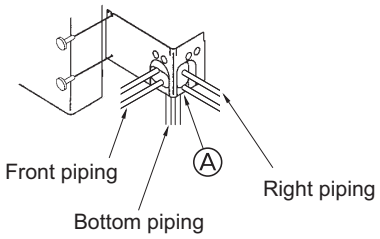

for a greener tomorrow

Eco Changes is the Mitsubishi Electric Group's environmental statement, and expresses the Group's stance on environmental management. Through a wide range of businesses, we are helping contribute to the realization of a sustainable society.

⚠Warning

■ Do not use refrigerant other than the type indicated in the manuals provided with the unit and on the nameplate.
- Doing so may cause the unit or pipes to burst, or result in explosion or fire during use, repair, or at the time of disposal of the unit.
- It may also be in violation of applicable laws.
- MITSUBISHI ELECTRIC CORPORATION cannot be held responsible for malfunctions or accidents resulting from the use of the wrong type of refrigerant.

■ Our air conditioning equipment and heat pumps contain a fluorinated greenhouse gas, R410A.

MITSUBISHI ELECTRIC CORPORATION

www.MitsubishiElectric.com

M-P0821

New publication effective July 2020
Specifications subject to change without notice