MITSUBISHI ELECTRIC
Changes for the Better
LIVING ENVIRONMENT SYSTEMS

M Serie

Außengerät
MXZ-4C80VA-E1

FKW Vorgefüllt
R410A

Planungsunterlagen

Inverter-Außengeräte in Wärmepumpengeräteausführung zum Anschluss von vier invertergeregelten Innengeräten aus der M-Serie (Multi-Split-System MXZ: Kühlen oder Heizen)

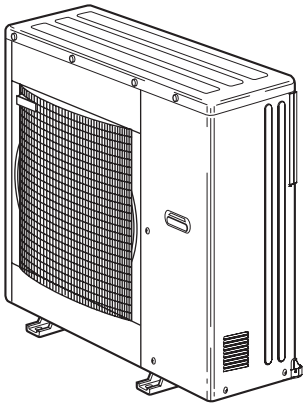

MXZ-4C80VA-E1

Inhalt

Multi-Split-System MXZ-4C80VA 2
Technische Daten 3
Dimensionierung der Kältemittelleitungen 4
Kältekreislaufdiagramm 5
Schaltungsdiagramm 6
Schalldruckpegel 7
Abmessungen 8
Elektrischer Anschluss 9
Zubehör: Luftauslassführung 10
Anhang: Kombinationen und Leistungen 11

Multi-Split-System MXZ-4C80VA

MXZ-4C80VA

- bis zu 4 Innengeräte
- max. 9,2 kW Kälteleistung
- max. 11,6 kW Heizleistung

Kombinationsbeispiel: System MXZ-4C80VA

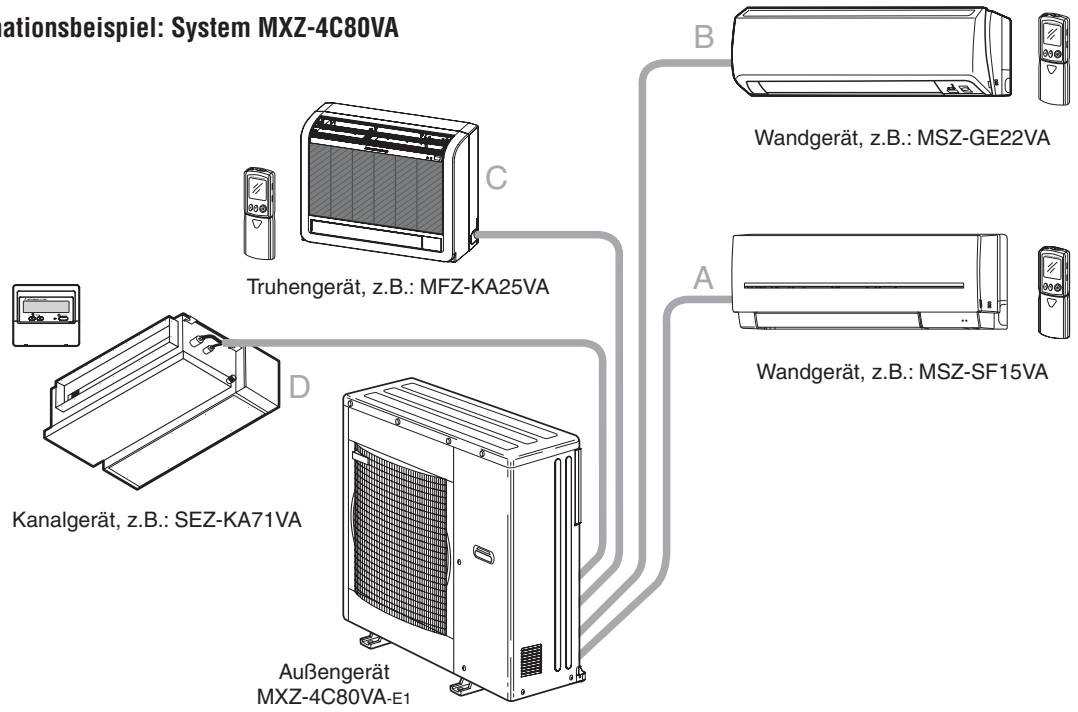

Die Abbildung zeigt eine mögliche Kombination, weitere umfangreiche Kombinationsmöglichkeiten finden Sie im Anhang ab Seite 11.

Typen- und Leistungsübersicht

Multi-Split-System	Anschließbare Innengeräte	Geeignete Innengeräte	Kühlleistung [kW]	Heizleistung [kW]
MXZ-4C80VA	mind. 1; max. 4	15/20/22/25/35/42/50/60/71	8,0 (3,7 – 9,2)	9,4 (3,4 – 11,6)

- Das Multi-Split-System MXZ-4C80VA arbeitet entweder im Kühl- oder Heizbetrieb.
- Es muss mindestens **ein** Innengerät angeschlossen werden.

Geeignete Innengeräte für das Multi-Split-System MXZ-4C80VA

Innengeräte-Bauart	Modellreihe	15	20	22	25	35	42	50	60	71
Wandgeräte	MSZ-FD				●	●		●		
	MSZ-GE			●	●	●	●	●	●	●
	MSZ-SF	●	●							
Truhengeräte	MFZ-KA				●	●		●		
Kanaleinbaugeräte	SEZ-KD				●	●		●	●	●
Deckenkassetten	MLZ-KA				●	●		●		
	SLZ-KA				●	●		●		

Bitte beachten Sie:
Sie können für die Multi-Split-Systeme MXZ nur die Innengeräte für Inverterregelung verwenden. Weil die Spannungsversorgung der Innengeräte über die Außengeräte erfolgt und die Steuerung der Systeme geändert wurde (***New A-Control***), können die Non-Inverter-Innengeräte nicht mit den Inverter-Geräten kombiniert werden.

Technische Daten

Außengerät			MXZ-4C801A
Kühlleistung ($Q_{0, min}$ – $Q_{0, max.}$)		kW	8,0 (3,7 – 9,2)
Heizleistung ($Q_{H, min}$ – $Q_{H, max.}$)		kW	9,4 (3,4 – 11,6)
Spannungsversorgung			~/N, 230 V, 50 Hz
Empfohlene Sicherungsgröße		A	25
Schutzart			IP24
Anzahl Innengeräte pro Außengerät			mind. 1, max. 4
Stromaufnahme ①	Kühlen	A	8,59
	Heizen	A	8,48
Leistungsaufnahme ①	Kühlen	kW	1955
	Heizen	kW	1930
Anlaufstrom ①	Kühlen	A	8,59
	Heizen	A	8,59
Leistungszahl COP (Coefficient of Performance)		K / H	4,09 / 4,87
Lüfterstufen / Drehzahl	Kühlen	min^{-1}	1 / 560
	Heizen	min^{-1}	1 / 580
Luftvolumenstrom	Kühlen	m^3/h	2526
	Heizen	m^3/h	2628
Schalldruckpegel	Kühlen	dB (A)	46
	Heizen	dB (A)	48
Abmessungen	Breite	mm	900
	Höhe	mm	900
	Tiefe	mm	320
Gewicht		kg	67
Kältetechnische Anschlüsse	fl.	mm	4 × Ø6,0
	gasf.	mm	1 × Ø12,0 + 3 × Ø10,0
max. Leitungslänge pro Anschluss		m	25
max. Gesamtleitungslänge		m	70
max. Höhendifferenz		m	IG über AG: 15 / IG unter AG: 10
Kältemittelmenge R410A ①		kg	3,5
Kältemittelöl NEO22		cm³	870

① Gemessen bei Nennfrequenz

② Nur für Außengerät

Messbedienungen nach ISO 5151, Leitungslänge (ein Weg): 5 m.

Kühlen:	Innen	27 °CTK / 19 °CFK
	Außen	35 °CTK / 24 °CFK
Heizen:	Innen	20 °CTK
	Außen	7 °CTK / 6 °CFK

Dimensionierung der Kältemittelleitungen

Leitungslänge, Höhendifferenz und Anzahl der Bögen

MXZ-4C80VA

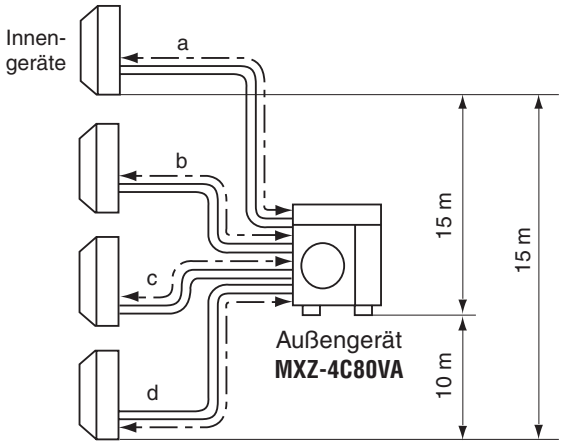

* Unabhängig davon, welches Gerät höher steht.

Daten / Modelle	Maximale Gesamtleitungslänge $L_A + L_B + L_C + L_D$ [m]	Maximale Einzelleitungslänge L_A, L_B, L_C, L_D [m]	Maximale Anzahl der Bögen	
			im System	pro Geräteanschlussleitung
Geräte A, B, C und D	70	25	70	25

Durchmesser der Anschlüsse und Leitungen

Innengerät		am Gerät	Leitungen
Modell	Anschluss für	mm	mm
15/20/22/25/35/42	Flüssigkeit	Ø6,0	Ø6,0
	Gas	Ø10,0	Ø10,0
50	Flüssigkeit	Ø6,0	Ø6,0
	Gas	Ø12,0	Ø12,0
60	Flüssigkeit	Ø6,0	Ø6,0
	Gas	Ø16,0	Ø16,0
71	Flüssigkeit	Ø10,0	Ø10,0①
	Gas	Ø16,0	Ø16,0①

Außengerät		Anschluss
	Anschluss für	mm
Innengerät A	Flüssigkeit	Ø6,0
	Gas	Ø12,0
Innengerät B	Flüssigkeit	Ø6,0
	Gas	Ø10,0
Innengerät C	Flüssigkeit	Ø6,0
	Gas	Ø10,0
Innengerät D	Flüssigkeit	Ø6,0
	Gas	Ø10,0

Kältemittelfüllung und Zusatzfüllung

Die Außengeräte sind mit Kältemittel R410A vorgefüllt und ermöglichen somit Leitungslängen bis zu 40 m ohne Zusatzfüllung. Bei Leitungslängen über 40 m muss zusätzliches Kältemittel nachgefüllt werden.

Modelle	Vorfüllung des Außengerätes	Länge der Kältemittelleitungen (ein Weg, 4 Geräte) ΣL Zusatzfüllung X ①			
		ΣL = 40 m	ΣL = 50 m	ΣL = 60 m	ΣL = 70 m
MXZ-4C80VA	3,500 g	0 g	200 g	400 g	600 g

① Berechnungsformel: $\Sigma L = L_A + L_B + L_C + L_D$; X [g] = 20 [g/m] x (L - 40) [m]

Kältekreislaufdiagramm

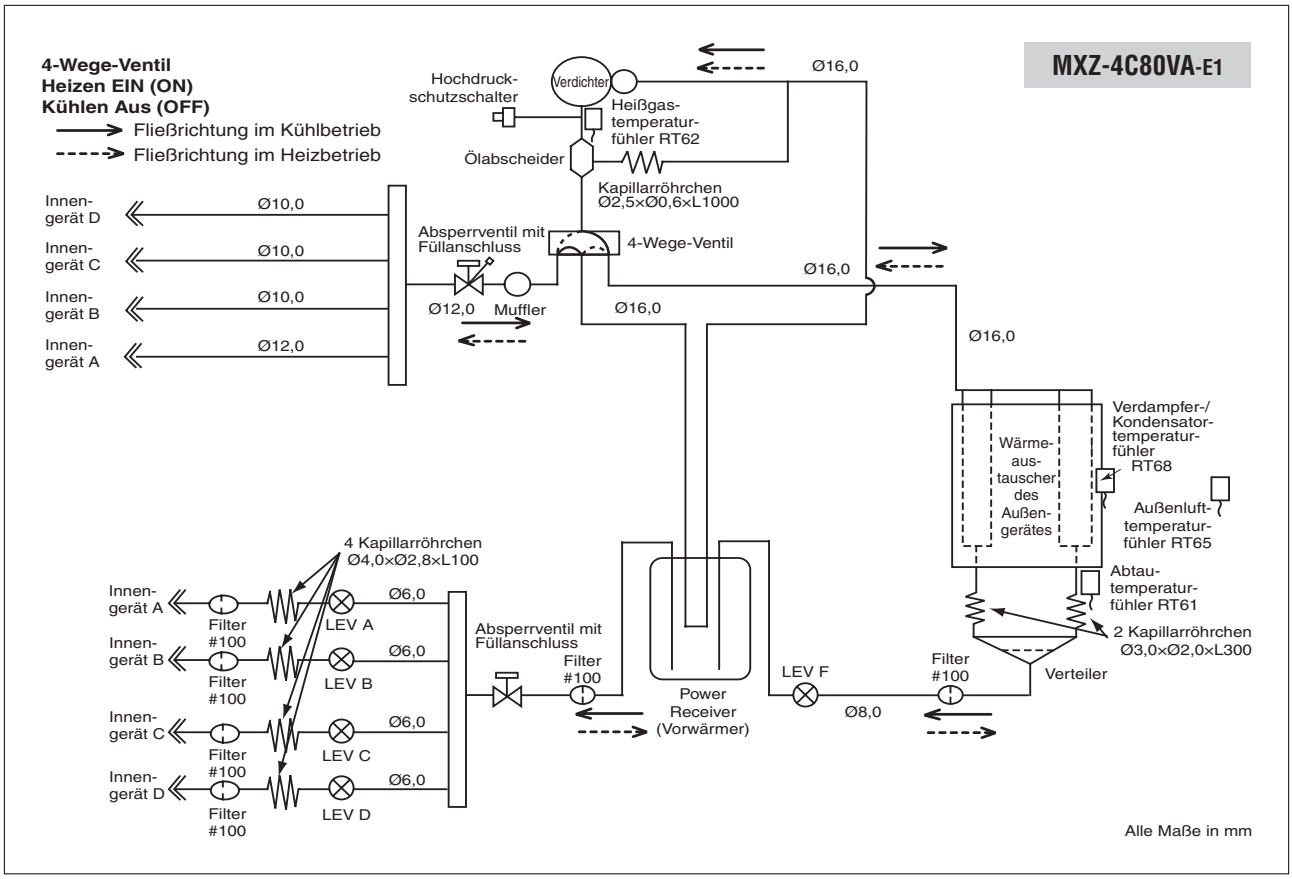

Schaltungsdiagramm

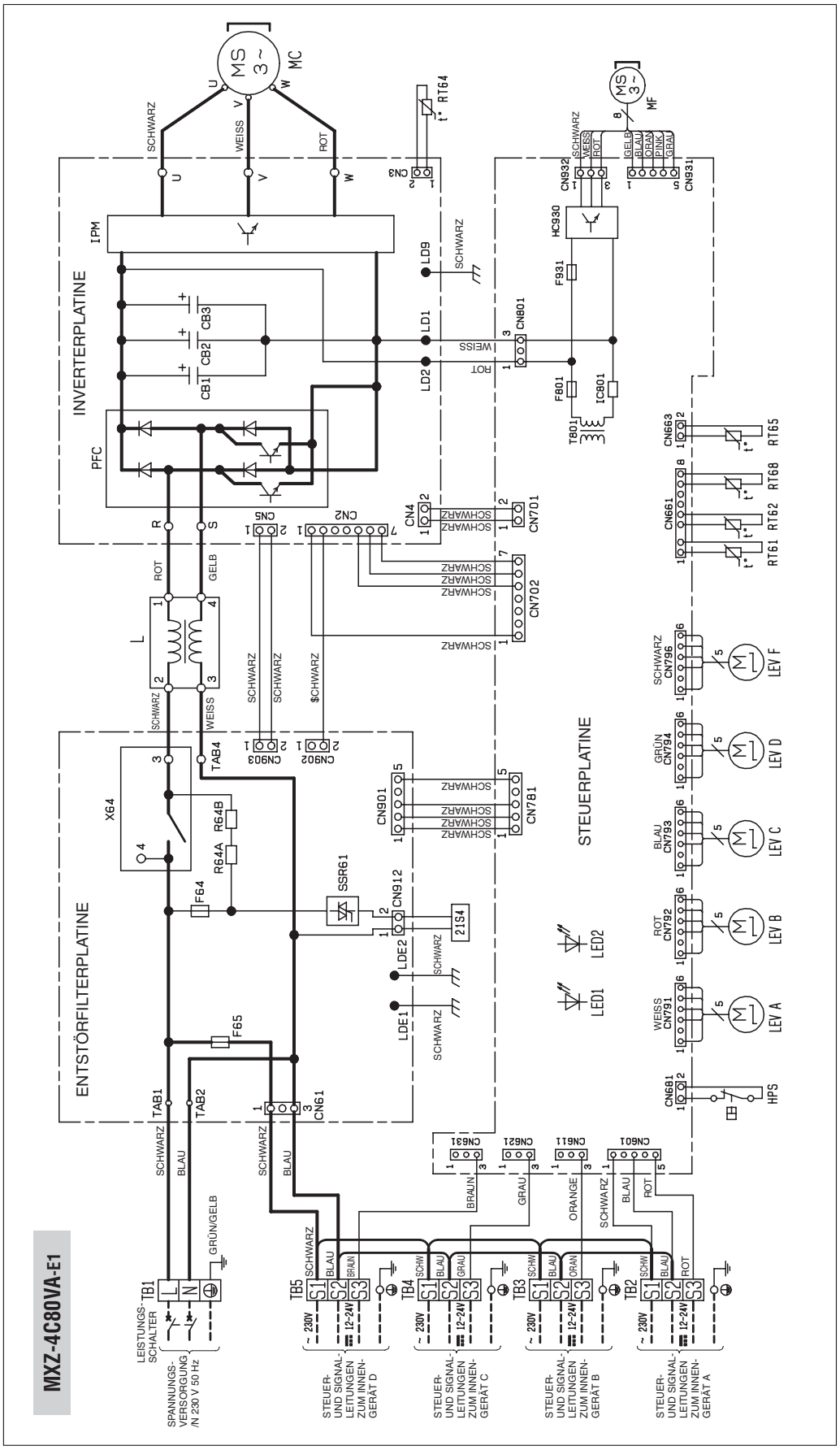

Symbol	Bedeutung	Symbol	Bedeutung	Symbol	Bedeutung
CB1–3	Ladekondensator	HPS	Hochdruckschalter	LEV F	Expansionsventil
F64	Sicherung (2 A, 250 A)	IC801	Halbleiter-Schaltkreis	MC	Verdichter
F65	Sicherung (6,3 A, 250 A)	IPM	Leistungsmodul	MF	Lüftermotor
F801	Sicherung (3,15 A, 250 V)	L	Drosselspule	PFC	Leistungsregelmodul
F931	Sicherung (3,15 A, 250 A)	LED1, 2	Leuchtdioden1, 2	R64A,B	Strombegrenzer
HC930	Leistungsmodul	LEV A–D	Expansionsventile (A-D)	RT61	Abtau-Temperaturfühler

Schalldruckpegel

MXZ-4C80VA

Lüfterstufe	Betriebsart	Schalldruck [dB(A)]	Linie
Hoch	Kühlen	46	●——●
	Heizen	48	○- - -○

Testbedingungen
Kühlen: Trockenkugeltemperatur 35 °C Feuchtkugeltemperatur 24 °C
Heizen: Trockenkugeltemperatur 7 °C Feuchtkugeltemperatur 6 °C

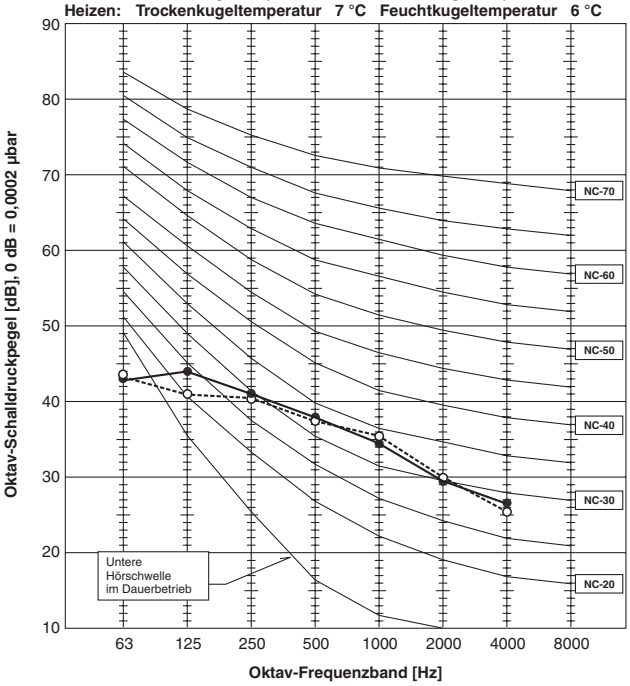

Messbedingungen

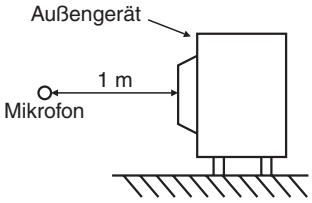

Abmessungen

MXZ-4C80VA-E1

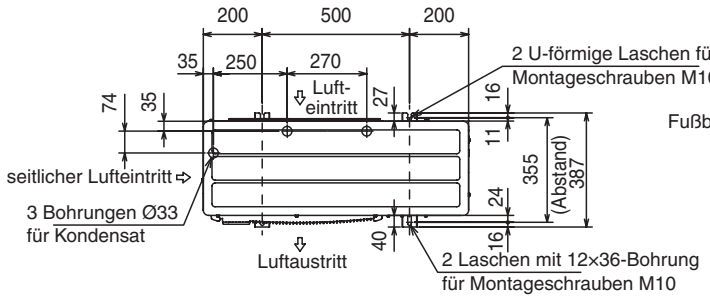

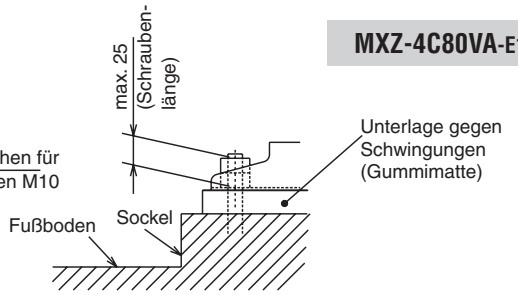

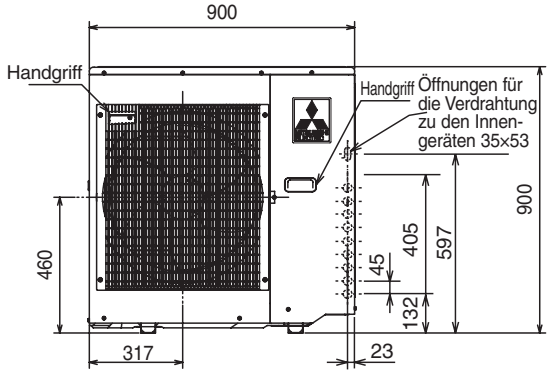

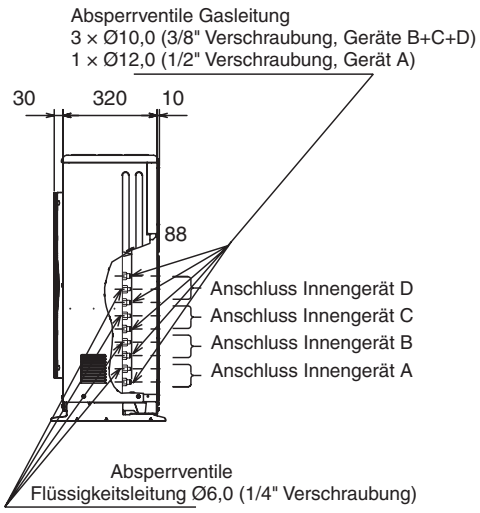

Raum für die Installation

Nach vorne und beide Seiten müssen frei bleiben.

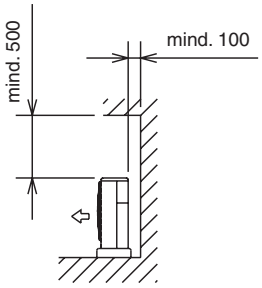

Nach vorne und nach oben muss frei bleiben.

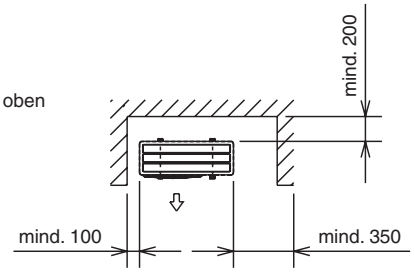

Nach vorne, nach oben und beide Seiten müssen frei bleiben.

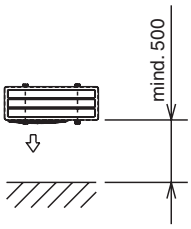

Raum für die Wartung

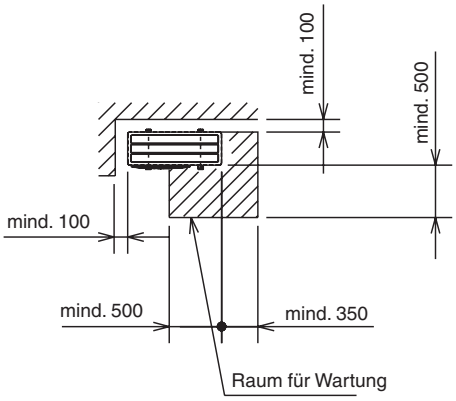

Alle Maße in mm

Elektrischer Anschluss

MXZ-4C80VA + 4 Innengeräte

Innengerät MSZ, MFZ, SLZ, SEZ

Innengerät A, B, C oder D
(Es ist nur ein Gerät dargestellt.)

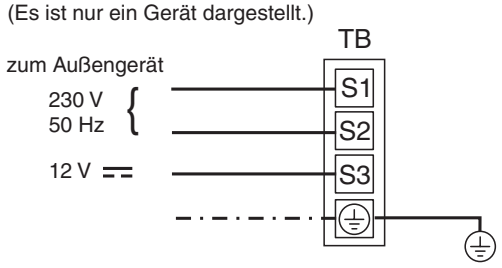

- Die Spannungsversorgung der Innengeräte **MSZ, MFZ, SLZ, SEZ** erfolgt durch das Außengerät **MXZ.**
- Versorgungsspannung und Steuersignale werden über die 3 Kabel an S1, S2 und S3 übertragen.

Außengerät MXZ für 4 Innengeräte

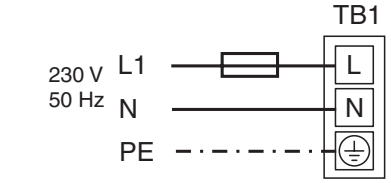

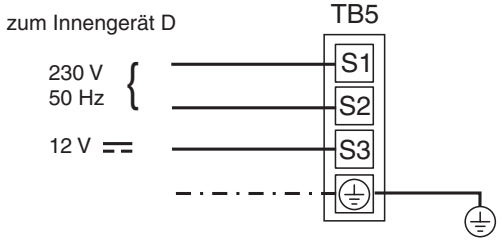

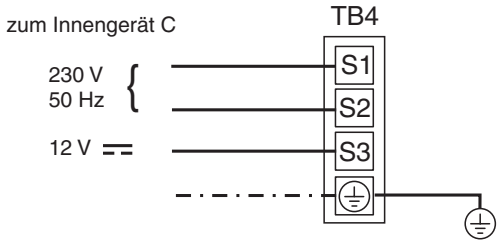

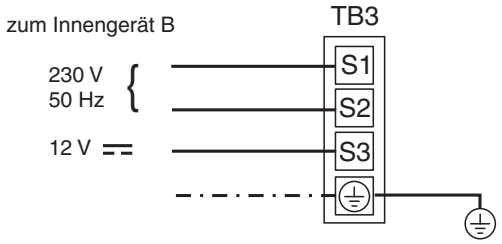

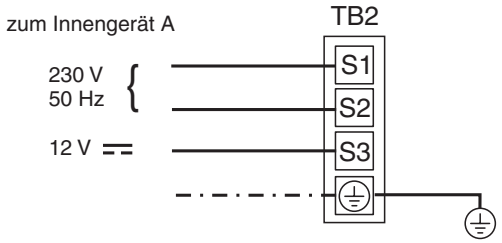

- Es müssen mindestens 2 Innengeräte angeschlossen werden.
  – Innengerät A an TB2
  – Innengerät B an TB3

Zubehör: Luftauslassführung

Die Luftauslassführung wird direkt auf das Luftauslassgitter des Außengerätes montiert und lenkt den austretenden Luftstrom durch die verstellbaren Lamellen in eine bestimmte Richtung ab. So wird z.B. die Belästigung von Personen durch den Abluftstrom vermieden, wenn das Außengerät über einer Eingangstür oder in Einkaufspassagen installiert wird.

Beachten Sie, dass der Luftstrom in eine Richtung abgeleitet wird, in der er keinen Schaden anrichten und keine Personen belästigen kann.

Außengerät	Luftauslassführung
MXZ-4C80VA	MAC-856SG

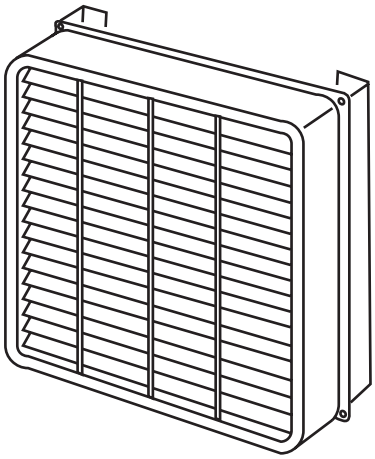

Montagebeispiel

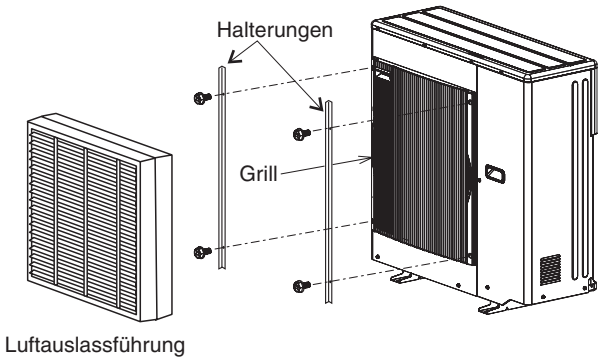

Abmessungen

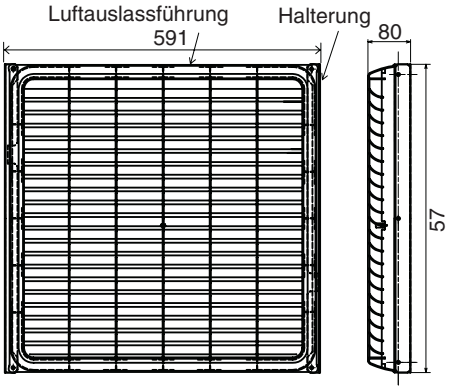

Alle Maße in mm

Weiteres Zubehör

Das Zubehör wird laufend erweitert, fragen Sie Ihren Mitsubishi Electric Service-Partner nach den neuesten Angeboten.

Anhang: Kombinationen und Leistungen

In diesem Abschnitt finden Sie sämtliche Kombinationsmöglichkeiten zwischen dem Außengerät und den Innengeräten für das Multi-Split-System MXZ-4C80VA. Dazu finden Sie in den Tabellen die kältetechnischen Leistungen der Kombinationen im Betrieb unter Nennbedingungen.

Bitte beachten Sie folgendes:

- Andere Kombinationen, als in den Tabellen aufgeführt, sind nicht möglich.
- Die Modellziffer im Gerätenamen bezeichnet die Nennkälteleistung in kW × 0,1:
  MSZ-GE**22**VA mit der Modellziffer **22** bietet **2,2 kW** Kälteleistung,
  MSZ-GE**50**VA mit der Modellziffer **50** bietet **5,0 kW** Kälteleistung, usw.
  In den ausführlichen Kombinationstabellen sind der leichteren Lesbarkeit die Modellziffern als Platzhalter für ein Innengerät mit der entsprechenden Leistung aufgeführt.
  22+22+50 bedeutet: zwei Innengeräte 22 (2,2 kW) und ein Innengerät 50 (5,0 kW)

Anhang: Kombinationen und Leistungen

Kühlbetrieb **12**
Heizbetrieb **22**

MXZ-4C80VA COOLING

Indoor units combination	Cooling capacity (kW)					Outdoor unit power consumption(kW)	Current (A)	Power factor(%)
	Unit A	Unit B	Unit C	Unit D	Total			
15	1.50				1.50 (1.4 - 2.1)	0.510 (0.470 - 1.000)	2.24	99
20	2.00				2.00 (1.4 - 2.8)	0.680 (0.470 - 1.330)	2.99	99
22	2.20				2.20 (1.4 - 3.0)	0.670 (0.400 - 0.920)	2.94	99
25	2.50				2.50 (1.4 - 3.3)	0.760 (0.400 - 1.010)	3.34	99
35	3.50				3.50 (1.5 - 4.3)	1.030 (0.400 - 1.290)	4.52	99
42	4.20				4.20 (1.6 - 5.0)	1.230 (0.410 - 1.460)	5.40	99
50	5.00				5.00 (1.6 - 5.6)	1.440 (0.420 - 1.630)	6.32	99
60	6.00				6.00 (1.6 - 6.6)	1.930 (0.400 - 2.130)	8.48	99
71	7.10				7.10 (1.7 - 7.4)	2.550 (0.410 - 2.710)	11.20	99
15+15	1.50	1.50			3.00 (2.0 - 4.0)	0.860 (0.660 - 2.130)	3.78	99
15+20	1.50	2.00			3.50 (2.0 - 4.6)	1.110 (0.660 - 2.530)	4.87	99
15+22	1.50	2.20			3.70 (2.0 - 4.8)	1.130 (0.630 - 2.590)	4.96	99
15+25	1.50	2.50			4.00 (2.0 - 5.2)	1.190 (0.660 - 2.760)	5.23	99
15+35	1.50	3.50			5.00 (2.0 - 6.2)	1.400 (0.610 - 1.990)	6.15	99
15+42	1.50	4.20			5.70 (2.0 - 6.8)	1.670 (0.610 - 2.370)	7.33	99
15+50	1.50	5.00			6.50 (2.0 - 7.1)	2.040 (0.610 - 2.570)	8.96	99
15+60	1.50	6.00			7.50 (2.0 - 7.8)	2.610 (0.610 - 2.780)	11.46	99
15+71	1.36	6.44			7.80 (2.0 - 8.2)	2.810 (0.620 - 2.890)	12.34	99
20+20	2.00	2.00			4.00 (2.0 - 5.2)	1.190 (0.660 - 2.760)	5.23	99
20+22	2.00	2.20			4.20 (2.0 - 5.4)	1.200 (0.630 - 2.220)	5.27	99
20+25	2.00	2.50			4.50 (2.0 - 5.7)	1.210 (0.630 - 1.700)	5.31	99
20+35	2.00	3.50			5.50 (2.0 - 6.7)	1.630 (0.610 - 2.320)	7.16	99
20+42	2.00	4.20			6.20 (2.0 - 7.1)	1.900 (0.610 - 2.570)	8.34	99
20+50	2.00	5.00			7.00 (2.0 - 7.1)	2.280 (0.610 - 2.570)	10.01	99
20+60	1.93	5.78			7.70 (2.0 - 8.1)	2.740 (0.610 - 2.870)	12.03	99
20+71	1.71	6.09			7.80 (2.0 - 8.2)	2.810 (0.620 - 2.890)	12.34	99
22+22	2.20	2.20			4.40 (2.0 - 5.6)	1.130 (0.600 - 1.600)	4.96	99
22+25	2.20	2.50			4.70 (2.0 - 5.9)	1.250 (0.600 - 1.780)	5.49	99
22+35	2.20	3.50			5.70 (2.0 - 6.8)	1.680 (0.580 - 2.340)	7.38	99
22+42	2.20	4.20			6.40 (2.0 - 7.1)	1.950 (0.580 - 2.530)	8.56	99
22+50	2.20	5.00			7.20 (2.0 - 7.4)	2.370 (0.580 - 2.620)	10.41	99
22+60	2.09	5.71			7.80 (2.0 - 8.2)	2.770 (0.580 - 2.860)	12.17	99
22+71	1.87	6.03			7.90 (2.0 - 8.8)	2.730 (0.590 - 3.150)	11.99	99
25+25	2.50	2.50			5.00 (2.0 - 6.2)	1.360 (0.580 - 1.950)	5.97	99
25+35	2.50	3.50			6.00 (2.0 - 7.1)	1.810 (0.580 - 2.540)	7.95	99
25+42	2.50	4.20			6.70 (2.0 - 7.1)	2.100 (0.580 - 2.540)	9.22	99
25+50	2.50	5.00			7.50 (2.0 - 7.8)	2.570 (0.580 - 2.750)	11.29	99
25+60	2.29	5.51			7.80 (2.0 - 8.2)	2.770 (0.590 - 2.860)	12.17	99
25+71	2.06	5.84			7.90 (2.0 - 8.8)	2.730 (0.590 - 3.150)	11.99	99
35+35	3.50	3.50			7.00 (2.0 - 7.1)	2.290 (0.580 - 2.550)	10.06	99

MXZ-4C80VA COOLING

Indoor units combination	Cooling capacity (kW)					Outdoor unit power consumption(kW)	Current (A)	Power factor(%)
	Unit A	Unit B	Unit C	Unit D	Total			
35+42	3.50	4.20			7.70 (2.0 - 8.1)	2.700 (0.580 - 2.850)	11.86	99
35+50	3.21	4.59			7.80 (2.0 - 8.2)	2.770 (0.590 - 2.870)	12.17	99
35+60	2.91	4.99			7.90 (2.0 - 8.8)	2.730 (0.590 - 3.160)	11.99	99
35+71	2.61	5.29			7.90 (2.1 - 8.8)	2.730 (0.580 - 3.120)	11.99	99
42+42	3.90	3.90			7.80 (2.0 - 8.2)	2.820 (0.590 - 2.890)	12.38	99
42+50	3.61	4.29			7.90 (2.0 - 8.8)	2.680 (0.590 - 3.160)	11.77	99
42+60	3.25	4.65			7.90 (2.1 - 8.8)	2.680 (0.590 - 3.140)	11.77	99
42+71	2.97	5.03			8.00 (2.1 - 8.8)	2.470 (0.560 - 3.070)	10.85	99
50+50	3.95	3.95			7.90 (2.1 - 8.8)	2.780 (0.590 - 3.190)	12.21	99
50+60	3.64	4.36			8.00 (2.1 - 8.8)	2.470 (0.570 - 3.090)	10.85	99
50+71	3.31	4.69			8.00 (2.1 - 8.8)	2.470 (0.550 - 3.020)	10.85	99
60+60	4.00	4.00			8.00 (2.1 - 8.8)	2.470 (0.550 - 3.020)	10.85	99
60+71	3.66	4.34			8.00 (2.1 - 8.8)	2.470 (0.550 - 3.010)	10.85	99
15+15+15	1.50	1.50	1.50		4.50 (2.9 - 5.7)	1.120 (0.770 - 3.020)	4.92	99
15+15+20	1.50	1.50	2.00		5.00 (2.9 - 6.3)	1.430 (0.780 - 3.340)	6.28	99
15+15+22	1.50	1.50	2.20		5.20 (2.9 - 6.5)	1.470 (0.750 - 3.380)	6.46	99
15+15+25	1.50	1.50	2.50		5.50 (2.9 - 6.9)	1.590 (0.750 - 3.530)	6.98	99
15+15+35	1.50	1.50	3.50		6.50 (2.9 - 8.0)	1.810 (0.750 - 2.690)	7.95	99
15+15+42	1.50	1.50	4.20		7.20 (2.9 - 8.7)	2.070 (0.750 - 2.870)	9.09	99
15+15+50	1.44	1.44	4.81		7.70 (2.9 - 9.0)	2.250 (0.760 - 3.050)	9.88	99
15+15+60	1.30	1.30	5.20		7.80 (2.9 - 9.0)	2.250 (0.770 - 3.020)	9.88	99
15+15+71	1.17	1.17	5.55		7.90 (2.9 - 9.0)	2.260 (0.780 - 2.980)	9.93	99
15+20+20	1.50	2.00	2.00		5.50 (2.9 - 6.9)	1.630 (0.780 - 3.560)	7.16	99
15+20+22	1.50	2.00	2.20		5.70 (2.9 - 7.1)	1.660 (0.750 - 3.610)	7.29	99
15+20+25	1.50	2.00	2.50		6.00 (2.9 - 7.5)	1.780 (0.830 - 3.760)	7.82	99
15+20+35	1.50	2.00	3.50		7.00 (2.9 - 8.5)	2.000 (0.750 - 2.740)	8.78	99
15+20+42	1.48	1.97	4.15		7.60 (2.9 - 9.0)	2.230 (0.750 - 3.060)	9.79	99
15+20+50	1.38	1.84	4.59		7.80 (2.9 - 9.0)	2.280 (0.760 - 3.040)	10.01	99
15+20+60	1.25	1.66	4.99		7.90 (2.9 - 9.0)	2.280 (0.770 - 3.000)	10.01	99
15+20+71	1.13	1.51	5.36		8.00 (2.9 - 9.0)	2.280 (0.780 - 3.090)	10.01	99
15+22+22	1.50	2.20	2.20		5.90 (2.9 - 7.4)	1.700 (0.720 - 3.690)	7.47	99
15+22+25	1.50	2.20	2.50		6.20 (2.9 - 7.7)	1.750 (0.720 - 3.300)	7.69	99
15+22+35	1.50	2.20	3.50		7.20 (2.9 - 8.7)	2.050 (0.720 - 2.840)	9.00	99
15+22+42	1.46	2.14	4.09		7.70 (2.9 - 9.0)	2.220 (0.720 - 3.030)	9.75	99
15+22+50	1.34	1.97	4.48		7.80 (2.9 - 9.0)	2.240 (0.730 - 3.000)	9.84	99
15+22+60	1.22	1.79	4.89		7.90 (2.9 - 9.0)	2.240 (0.740 - 2.970)	9.84	99
15+22+71	1.11	1.63	5.26		8.00 (2.9 - 9.0)	2.240 (0.750 - 3.060)	9.84	99
15+25+25	1.50	2.50	2.50		6.50 (2.9 - 8.0)	1.770 (0.720 - 2.660)	7.77	99
15+25+35	1.50	2.50	3.50		7.50 (2.9 - 9.0)	2.180 (0.720 - 3.040)	9.57	99
15+25+42	1.41	2.35	3.94		7.70 (2.9 - 9.0)	2.220 (0.730 - 3.020)	9.75	99

MXZ-4C80VA COOLING

Indoor units combination	Cooling capacity (kW)					Outdoor unit power consumption(kW)	Current (A)	Power factor(%)
	Unit A	Unit B	Unit C	Unit D	Total			
15+25+50	1.30	2.17	4.33		7.80 (2.9 - 9.0)	2.240 (0.740 - 2.990)	9.84	99
15+25+60	1.19	1.98	4.74		7.90 (2.9 - 9.0)	2.240 (0.750 - 2.960)	9.84	99
15+25+71	1.08	1.80	5.12		8.00 (2.9 - 9.0)	2.240 (0.750 - 3.060)	9.84	99
15+35+35	1.38	3.21	3.21		7.80 (2.9 - 9.0)	2.270 (0.730 - 3.010)	9.97	99
15+35+42	1.27	2.97	3.56		7.80 (2.9 - 9.0)	2.250 (0.740 - 2.980)	9.88	99
15+35+50	1.19	2.77	3.95		7.90 (2.9 - 9.0)	2.270 (0.750 - 2.960)	9.97	99
15+35+60	1.09	2.55	4.36		8.00 (2.9 - 9.0)	2.260 (0.750 - 3.060)	9.93	99
15+35+71	0.99	2.31	4.69		8.00 (2.9 - 9.0)	2.240 (0.750 - 3.060)	9.84	99
15+42+42	1.20	3.35	3.35		7.90 (2.9 - 9.0)	2.260 (0.740 - 2.960)	9.93	99
15+42+50	1.12	3.14	3.74		8.00 (2.9 - 9.0)	2.270 (0.750 - 3.060)	9.97	99
15+42+60	1.03	2.87	4.10		8.00 (2.9 - 9.0)	2.240 (0.750 - 3.060)	9.84	99
15+42+71	0.94	2.63	4.44		8.00 (2.9 - 9.0)	2.220 (0.750 - 3.060)	9.75	99
15+50+50	1.04	3.48	3.48		8.00 (2.9 - 9.0)	2.260 (0.750 - 3.060)	9.93	99
15+50+60	0.96	3.20	3.84		8.00 (2.9 - 9.0)	2.230 (0.750 - 3.060)	9.79	99
15+50+71	0.88	2.94	4.18		8.00 (2.9 - 9.0)	2.210 (0.750 - 3.060)	9.71	99
20+20+20	2.00	2.00	2.00		6.00 (2.9 - 7.5)	1.700 (0.770 - 3.700)	7.47	99
20+20+22	2.00	2.00	2.20		6.20 (2.9 - 7.7)	1.790 (0.750 - 3.330)	7.86	99
20+20+25	2.00	2.00	2.50		6.50 (2.9 - 8.0)	1.810 (0.750 - 2.690)	7.95	99
20+20+35	2.00	2.00	3.50		7.50 (2.9 - 9.0)	2.220 (0.750 - 3.070)	9.75	99
20+20+42	1.88	1.88	3.94		7.70 (2.9 - 9.0)	2.260 (0.760 - 3.050)	9.93	99
20+20+50	1.73	1.73	4.33		7.80 (2.9 - 9.0)	2.280 (0.770 - 3.020)	10.01	99
20+20+60	1.58	1.58	4.74		7.90 (2.9 - 9.0)	2.280 (0.780 - 2.990)	10.01	99
20+20+71	1.44	1.44	5.12		8.00 (2.9 - 9.0)	2.280 (0.780 - 3.090)	10.01	99
20+22+22	2.00	2.20	2.20		6.40 (2.9 - 7.9)	1.770 (0.720 - 2.870)	7.77	99
20+22+25	2.00	2.20	2.50		6.70 (2.9 - 8.2)	1.820 (0.720 - 2.510)	7.99	99
20+22+35	1.97	2.17	3.45		7.60 (2.9 - 9.0)	2.210 (0.720 - 3.030)	9.71	99
20+22+42	1.83	2.02	3.85		7.70 (2.9 - 9.0)	2.220 (0.730 - 3.010)	9.75	99
20+22+50	1.70	1.87	4.24		7.80 (2.9 - 9.0)	2.240 (0.740 - 2.980)	9.84	99
20+22+60	1.55	1.70	4.65		7.90 (2.9 - 9.0)	2.240 (0.750 - 2.950)	9.84	99
20+22+71	1.42	1.56	5.03		8.00 (2.9 - 9.0)	2.240 (0.750 - 3.060)	9.84	99
20+25+25	2.00	2.50	2.50		7.00 (2.9 - 8.5)	1.960 (0.720 - 2.710)	8.61	99
20+25+35	1.93	2.41	3.37		7.70 (2.9 - 9.0)	2.240 (0.730 - 3.020)	9.84	99
20+25+42	1.79	2.24	3.77		7.80 (2.9 - 9.0)	2.250 (0.730 - 3.000)	9.88	99
20+25+50	1.66	2.08	4.16		7.90 (2.9 - 9.0)	2.270 (0.740 - 2.970)	9.97	99
20+25+60	1.51	1.89	4.54		7.95 (2.9 - 9.0)	2.260 (0.750 - 2.940)	9.93	99
20+25+71	1.38	1.72	4.90		8.00 (2.9 - 9.0)	2.240 (0.750 - 3.060)	9.84	99
20+35+35	1.73	3.03	3.03		7.80 (2.9 - 9.0)	2.270 (0.740 - 2.990)	9.97	99
20+35+42	1.63	2.85	3.42		7.90 (2.9 - 9.0)	2.280 (0.740 - 2.970)	10.01	99
20+35+50	1.51	2.65	3.79		7.95 (2.9 - 9.0)	2.290 (0.750 - 2.940)	10.06	99
20+35+60	1.39	2.43	4.17		8.00 (2.9 - 9.0)	2.260 (0.750 - 3.060)	9.93	99

MXZ-4C80VA COOLING

Indoor units combination	Cooling capacity (kW)					Outdoor unit power consumption(kW)	Current (A)	Power factor(%)
	Unit A	Unit B	Unit C	Unit D	Total			
20+35+71	1.27	2.22	4.51		8.00 (2.9 - 9.0)	2.240 (0.750 - 3.060)	9.84	99
20+42+42	1.52	3.19	3.19		7.90 (2.9 - 9.0)	2.260 (0.750 - 2.940)	9.93	99
20+42+50	1.43	3.00	3.57		8.00 (2.9 - 9.0)	2.270 (0.750 - 3.060)	9.97	99
20+42+60	1.31	2.75	3.93		8.00 (2.9 - 9.0)	2.240 (0.750 - 3.060)	9.84	99
20+42+71	1.20	2.53	4.27		8.00 (2.9 - 9.0)	2.220 (0.750 - 3.060)	9.75	99
20+50+50	1.33	3.33	3.33		8.00 (2.9 - 9.0)	2.260 (0.750 - 3.060)	9.93	99
20+50+60	1.23	3.08	3.69		8.00 (2.9 - 9.0)	2.230 (0.750 - 3.060)	9.79	99
20+50+71	1.13	2.84	4.03		8.00 (2.9 - 9.0)	2.210 (0.750 - 3.060)	9.71	99
22+22+22	2.20	2.20	2.20		6.60 (2.9 - 8.1)	1.740 (0.690 - 2.410)	7.64	99
22+22+25	2.20	2.20	2.50		6.90 (2.9 - 8.4)	1.870 (0.690 - 2.610)	8.21	99
22+22+35	2.14	2.14	3.41		7.70 (2.9 - 9.0)	2.200 (0.690 - 3.000)	9.66	99
22+22+42	2.00	2.00	3.81		7.80 (2.9 - 9.0)	2.210 (0.700 - 2.970)	9.71	99
22+22+50	1.83	1.83	4.15		7.80 (2.9 - 9.0)	2.200 (0.710 - 2.950)	9.66	99
22+22+60	1.67	1.67	4.56		7.90 (2.9 - 9.0)	2.200 (0.720 - 2.910)	9.66	99
22+22+71	1.53	1.53	4.94		8.00 (2.9 - 9.0)	2.200 (0.720 - 3.030)	9.66	99
22+25+25	2.20	2.50	2.50		7.20 (2.9 - 8.7)	2.010 (0.690 - 2.810)	8.83	99
22+25+35	2.07	2.35	3.29		7.70 (2.9 - 9.0)	2.200 (0.700 - 2.990)	9.66	99
22+25+42	1.93	2.19	3.68		7.80 (2.9 - 9.0)	2.210 (0.700 - 2.960)	9.71	99
22+25+50	1.79	2.04	4.07		7.90 (2.9 - 9.0)	2.230 (0.710 - 2.940)	9.79	99
22+25+60	1.64	1.87	4.49		8.00 (2.9 - 9.0)	2.220 (0.720 - 3.030)	9.75	99
22+25+71	1.49	1.69	4.81		8.00 (2.9 - 9.0)	2.200 (0.720 - 3.030)	9.66	99
22+35+35	1.87	2.97	2.97		7.80 (2.9 - 9.0)	2.230 (0.710 - 2.950)	9.79	99
22+35+42	1.76	2.79	3.35		7.90 (2.9 - 9.0)	2.240 (0.710 - 2.930)	9.84	99
22+35+50	1.64	2.62	3.74		8.00 (2.9 - 9.0)	2.250 (0.720 - 3.030)	9.88	99
22+35+60	1.50	2.39	4.10		8.00 (2.9 - 9.0)	2.220 (0.720 - 3.030)	9.75	99
22+35+71	1.38	2.19	4.44		8.00 (2.9 - 9.0)	2.200 (0.720 - 3.030)	9.66	99
22+42+42	1.66	3.17	3.17		8.00 (2.9 - 9.0)	2.240 (0.720 - 3.030)	9.84	99
22+42+50	1.54	2.95	3.51		8.00 (2.9 - 9.0)	2.230 (0.720 - 3.030)	9.79	99
22+42+60	1.42	2.71	3.87		8.00 (2.9 - 9.0)	2.200 (0.720 - 3.030)	9.66	99
22+42+71	1.30	2.49	4.21		8.00 (2.9 - 9.0)	2.180 (0.720 - 3.030)	9.57	99
22+50+50	1.44	3.28	3.28		8.00 (2.9 - 9.0)	2.220 (0.720 - 3.030)	9.75	99
22+50+60	1.33	3.03	3.64		8.00 (2.9 - 9.0)	2.190 (0.720 - 3.030)	9.62	99
22+50+71	1.23	2.80	3.97		8.00 (2.9 - 9.0)	2.170 (0.720 - 3.030)	9.53	99
25+25+25	2.50	2.50	2.50		7.50 (2.9 - 9.0)	2.140 (0.690 - 3.010)	9.40	99
25+25+35	2.29	2.29	3.21		7.80 (2.9 - 9.0)	2.230 (0.700 - 2.980)	9.79	99
25+25+42	2.12	2.12	3.56		7.80 (2.9 - 9.0)	2.210 (0.710 - 2.950)	9.71	99
25+25+50	1.98	1.98	3.95		7.90 (2.9 - 9.0)	2.230 (0.720 - 2.930)	9.79	99
25+25+60	1.82	1.82	4.36		8.00 (2.9 - 9.0)	2.220 (0.720 - 3.030)	9.75	99
25+25+71	1.65	1.65	4.69		8.00 (2.9 - 9.0)	2.200 (0.720 - 3.030)	9.66	99
25+35+35	2.08	2.91	2.91		7.90 (2.9 - 9.0)	2.260 (0.710 - 2.940)	9.93	99

MXZ-4C80VA COOLING

Indoor units combination	Cooling capacity (kW)					Outdoor unit power consumption(kW)	Current (A)	Power factor(%)
	Unit A	Unit B	Unit C	Unit D	Total			
25+35+42	1.94	2.71	3.25		7.90 (2.9 - 9.0)	2.240 (0.720 - 2.920)	9.84	99
25+35+50	1.82	2.55	3.64		8.00 (2.9 - 9.0)	2.250 (0.720 - 3.030)	9.88	99
25+35+60	1.67	2.33	4.00		8.00 (2.9 - 9.0)	2.220 (0.720 - 3.030)	9.75	99
25+35+71	1.53	2.14	4.34		8.00 (2.9 - 9.0)	2.200 (0.720 - 3.030)	9.66	99
25+42+42	1.83	3.08	3.08		8.00 (2.9 - 9.0)	2.240 (0.720 - 3.030)	9.84	99
25+42+50	1.71	2.87	3.42		8.00 (2.9 - 9.0)	2.230 (0.720 - 3.030)	9.79	99
25+42+60	1.57	2.65	3.78		8.00 (2.9 - 9.0)	2.200 (0.720 - 3.030)	9.66	99
25+42+71	1.45	2.43	4.12		8.00 (2.9 - 9.0)	2.180 (0.720 - 3.030)	9.57	99
25+50+50	1.60	3.20	3.20		8.00 (2.9 - 9.0)	2.220 (0.720 - 3.030)	9.75	99
25+50+60	1.48	2.96	3.56		8.00 (2.9 - 9.0)	2.190 (0.720 - 3.030)	9.62	99
35+35+35	2.65	2.65	2.65		7.95 (2.9 - 9.0)	2.280 (0.720 - 2.910)	10.01	99
35+35+42	2.50	2.50	3.00		8.00 (2.9 - 9.0)	2.260 (0.720 - 3.030)	9.93	99
35+35+50	2.33	2.33	3.33		8.00 (2.9 - 9.0)	2.250 (0.720 - 3.030)	9.88	99
35+35+60	2.15	2.15	3.69		8.00 (2.9 - 9.0)	2.220 (0.720 - 3.030)	9.75	99
35+35+71	1.99	1.99	4.03		8.00 (2.9 - 9.0)	2.200 (0.720 - 3.030)	9.66	99
35+42+42	2.35	2.82	2.82		8.00 (2.9 - 9.0)	2.240 (0.720 - 3.030)	9.84	99
35+42+50	2.20	2.65	3.15		8.00 (2.9 - 9.0)	2.230 (0.720 - 3.030)	9.79	99
35+42+60	2.04	2.45	3.50		8.00 (2.9 - 9.0)	2.200 (0.720 - 3.030)	9.66	99
35+50+50	2.07	2.96	2.96		8.00 (2.9 - 9.0)	2.220 (0.720 - 3.030)	9.75	99
35+50+60	1.93	2.76	3.31		8.00 (2.9 - 9.0)	2.190 (0.720 - 3.030)	9.62	99
15+15+15+15	1.50	1.50	1.50	1.50	6.00 (3.7 - 6.4)	1.580 (0.910 - 3.360)	6.94	99
15+15+15+20	1.48	1.48	1.48	1.97	6.40 (3.7 - 6.9)	1.930 (0.930 - 3.610)	8.48	99
15+15+15+22	1.48	1.48	1.48	2.17	6.60 (3.7 - 7.2)	1.980 (0.900 - 3.620)	8.70	99
15+15+15+25	1.46	1.46	1.46	2.43	6.80 (3.7 - 7.4)	2.080 (0.900 - 3.650)	9.13	99
15+15+15+35	1.43	1.43	1.43	3.33	7.60 (3.7 - 8.4)	2.450 (1.000 - 3.820)	10.76	99
15+15+15+42	1.33	1.33	1.33	3.72	7.70 (3.7 - 8.8)	2.250 (0.900 - 3.300)	9.88	99
15+15+15+50	1.24	1.24	1.24	4.13	7.85 (3.7 - 9.2)	2.240 (0.900 - 2.770)	9.84	99
15+15+15+60	1.14	1.14	1.14	4.54	7.95 (3.7 - 9.2)	2.220 (0.900 - 2.750)	9.75	99
15+15+15+71	1.03	1.03	1.03	4.90	8.00 (3.7 - 9.2)	2.210 (0.900 - 2.710)	9.71	99
15+15+20+20	1.46	1.46	1.94	1.94	6.80 (3.7 - 7.4)	2.120 (0.930 - 3.690)	9.31	99
15+15+20+22	1.46	1.46	1.94	2.14	7.00 (3.7 - 7.7)	2.170 (0.900 - 3.700)	9.53	99
15+15+20+25	1.44	1.44	1.92	2.40	7.20 (3.7 - 7.9)	2.260 (0.900 - 3.740)	9.93	99
15+15+20+35	1.36	1.36	1.81	3.17	7.70 (3.7 - 8.8)	2.270 (0.900 - 3.310)	9.97	99
15+15+20+42	1.28	1.28	1.71	3.58	7.85 (3.7 - 9.2)	2.250 (0.900 - 2.780)	9.88	99
15+15+20+50	1.19	1.19	1.58	3.96	7.92 (3.7 - 9.2)	2.240 (0.900 - 2.770)	9.84	99
15+15+20+60	1.09	1.09	1.45	4.36	8.00 (3.7 - 9.2)	2.230 (0.900 - 2.740)	9.79	99
15+15+20+71	0.99	0.99	1.32	4.69	8.00 (3.7 - 9.2)	2.210 (0.900 - 2.700)	9.71	99
15+15+22+22	1.44	1.44	2.11	2.11	7.10 (3.7 - 7.8)	2.180 (0.870 - 3.680)	9.57	99
15+15+22+25	1.44	1.44	2.11	2.40	7.40 (3.7 - 8.2)	2.320 (0.870 - 3.750)	10.19	99
15+15+22+35	1.33	1.33	1.95	3.10	7.70 (3.7 - 8.8)	2.230 (0.870 - 3.270)	9.79	99

MXZ-4C80VA COOLING

Indoor units combination	Cooling capacity (kW)					Outdoor unit power consumption(kW)	Current (A)	Power factor(%)
	Unit A	Unit B	Unit C	Unit D	Total			
15+15+22+42	1.25	1.25	1.84	3.51	7.85 (3.7 - 9.2)	2.210 (0.870 - 2.740)	9.71	99
15+15+22+50	1.17	1.17	1.71	3.90	7.95 (3.7 - 9.2)	2.210 (0.870 - 2.730)	9.71	99
15+15+22+60	1.07	1.07	1.57	4.29	8.00 (3.7 - 9.2)	2.190 (0.870 - 2.690)	9.62	99
15+15+22+71	0.98	0.98	1.43	4.62	8.00 (3.7 - 9.2)	2.170 (0.870 - 2.660)	9.53	99
15+15+25+25	1.43	1.43	2.38	2.38	7.60 (3.7 - 8.4)	2.410 (0.970 - 3.780)	10.58	99
15+15+25+35	1.30	1.30	2.17	3.03	7.80 (3.7 - 9.2)	2.230 (0.870 - 2.750)	9.79	99
15+15+25+42	1.22	1.22	2.04	3.42	7.90 (3.7 - 9.2)	2.210 (0.870 - 2.740)	9.71	99
15+15+25+50	1.14	1.14	1.89	3.79	7.95 (3.7 - 9.2)	2.210 (0.870 - 2.720)	9.71	99
15+15+25+60	1.04	1.04	1.74	4.17	8.00 (3.7 - 9.2)	2.190 (0.870 - 2.690)	9.62	99
15+15+25+71	0.95	0.95	1.59	4.51	8.00 (3.7 - 9.2)	2.170 (0.870 - 2.650)	9.53	99
15+15+35+35	1.19	1.19	2.77	2.77	7.92 (3.7 - 9.2)	2.230 (0.870 - 2.750)	9.79	99
15+15+35+42	1.11	1.11	2.60	3.12	7.95 (3.7 - 9.2)	2.220 (0.870 - 2.720)	9.75	99
15+15+35+50	1.04	1.04	2.43	3.48	8.00 (3.7 - 9.2)	2.220 (0.870 - 2.700)	9.75	99
15+15+35+60	0.96	0.96	2.24	3.84	8.00 (3.7 - 9.2)	2.190 (0.870 - 2.660)	9.62	99
15+15+35+71	0.88	0.88	2.06	4.18	8.00 (3.7 - 9.2)	2.170 (0.870 - 2.630)	9.53	99
15+15+42+42	1.05	1.05	2.95	2.95	8.00 (3.7 - 9.2)	2.210 (0.870 - 2.700)	9.71	99
15+15+42+50	0.98	0.98	2.75	3.28	8.00 (3.7 - 9.2)	2.200 (0.870 - 2.670)	9.66	99
15+15+42+60	0.91	0.91	2.55	3.64	8.00 (3.7 - 9.2)	2.170 (0.870 - 2.640)	9.53	99
15+15+42+71	0.84	0.84	2.35	3.97	8.00 (3.7 - 9.2)	2.150 (0.870 - 2.610)	9.44	99
15+15+50+50	0.92	0.92	3.08	3.08	8.00 (3.7 - 9.2)	2.190 (0.870 - 2.640)	9.62	99
15+15+50+60	0.86	0.86	2.86	3.43	8.00 (3.7 - 9.2)	2.160 (0.870 - 2.610)	9.49	99
15+20+20+20	1.44	1.92	1.92	1.92	7.20 (3.7 - 7.9)	2.300 (0.930 - 3.780)	10.10	99
15+20+20+22	1.44	1.92	1.92	2.11	7.40 (3.7 - 8.2)	2.360 (0.900 - 3.790)	10.36	99
15+20+20+25	1.43	1.90	1.90	2.38	7.60 (3.7 - 8.4)	2.450 (1.000 - 3.820)	10.76	99
15+20+20+35	1.30	1.73	1.73	3.03	7.80 (3.7 - 9.2)	2.270 (0.900 - 2.790)	9.97	99
15+20+20+42	1.22	1.63	1.63	3.42	7.90 (3.7 - 9.2)	2.250 (0.900 - 2.780)	9.88	99
15+20+20+50	1.14	1.51	1.51	3.79	7.95 (3.7 - 9.2)	2.250 (0.900 - 2.760)	9.88	99
15+20+20+60	1.04	1.39	1.39	4.17	8.00 (3.7 - 9.2)	2.230 (0.900 - 2.730)	9.79	99
15+20+20+71	0.95	1.27	1.27	4.51	8.00 (3.7 - 9.2)	2.210 (0.900 - 2.690)	9.71	99
15+20+22+22	1.42	1.90	2.09	2.09	7.50 (3.7 - 8.3)	2.360 (0.870 - 3.760)	10.36	99
15+20+22+25	1.39	1.85	2.04	2.32	7.60 (3.7 - 8.4)	2.230 (0.870 - 3.780)	9.79	99
15+20+22+35	1.28	1.71	1.88	2.99	7.85 (3.7 - 9.2)	2.230 (0.870 - 2.750)	9.79	99
15+20+22+42	1.20	1.60	1.76	3.35	7.90 (3.7 - 9.2)	2.210 (0.870 - 2.740)	9.71	99
15+20+22+50	1.11	1.49	1.63	3.71	7.95 (3.7 - 9.2)	2.210 (0.870 - 2.710)	9.71	99
15+20+22+60	1.03	1.37	1.50	4.10	8.00 (3.7 - 9.2)	2.190 (0.870 - 2.680)	9.62	99
15+20+22+71	0.94	1.25	1.38	4.44	8.00 (3.7 - 9.2)	2.170 (0.870 - 2.650)	9.53	99
15+20+25+25	1.36	1.81	2.26	2.26	7.70 (3.7 - 8.8)	2.230 (0.870 - 3.270)	9.79	99
15+20+25+35	1.24	1.65	2.07	2.89	7.85 (3.7 - 9.2)	2.230 (0.870 - 2.750)	9.79	99
15+20+25+42	1.17	1.56	1.95	3.27	7.95 (3.7 - 9.2)	2.220 (0.870 - 2.740)	9.75	99
15+20+25+50	1.09	1.45	1.82	3.64	8.00 (3.7 - 9.2)	2.220 (0.870 - 2.710)	9.75	99

MXZ-4C80VA COOLING

Indoor units combination	Cooling capacity (kW)					Outdoor unit power consumption(kW)	Current (A)	Power factor(%)
	Unit A	Unit B	Unit C	Unit D	Total			
15+20+25+60	1.00	1.33	1.67	4.00	8.00 (3.7 - 9.2)	2.190 (0.870 - 2.680)	9.62	99
15+20+25+71	0.92	1.22	1.53	4.34	8.00 (3.7 - 9.2)	2.170 (0.870 - 2.640)	9.53	99
15+20+35+35	1.14	1.51	2.65	2.65	7.95 (3.7 - 9.2)	2.240 (0.870 - 2.740)	9.84	99
15+20+35+42	1.07	1.43	2.50	3.00	8.00 (3.7 - 9.2)	2.230 (0.870 - 2.710)	9.79	99
15+20+35+50	1.00	1.33	2.33	3.33	8.00 (3.7 - 9.2)	2.220 (0.870 - 2.690)	9.75	99
15+20+35+60	0.92	1.23	2.15	3.69	8.00 (3.7 - 9.2)	2.190 (0.870 - 2.650)	9.62	99
15+20+35+71	0.85	1.13	1.99	4.03	8.00 (3.7 - 9.2)	2.170 (0.870 - 2.620)	9.53	99
15+20+42+42	1.01	1.34	2.82	2.82	8.00 (3.7 - 9.2)	2.210 (0.870 - 2.690)	9.71	99
15+20+42+50	0.94	1.26	2.65	3.15	8.00 (3.7 - 9.2)	2.200 (0.870 - 2.660)	9.66	99
15+20+42+60	0.88	1.17	2.45	3.50	8.00 (3.7 - 9.2)	2.170 (0.870 - 2.630)	9.53	99
15+20+50+50	0.89	1.19	2.96	2.96	8.00 (3.7 - 9.2)	2.190 (0.870 - 2.630)	9.62	99
15+20+50+60	0.83	1.10	2.76	3.31	8.00 (3.7 - 9.2)	2.160 (0.870 - 2.610)	9.49	99
15+22+22+22	1.41	2.06	2.06	2.06	7.60 (3.7 - 8.4)	2.190 (0.840 - 3.740)	9.62	99
15+22+22+25	1.38	2.02	2.02	2.29	7.70 (3.7 - 8.8)	2.190 (0.840 - 3.230)	9.62	99
15+22+22+35	1.25	1.84	1.84	2.92	7.85 (3.7 - 9.2)	2.190 (0.840 - 2.710)	9.62	99
15+22+22+42	1.18	1.73	1.73	3.31	7.95 (3.7 - 9.2)	2.180 (0.840 - 2.700)	9.57	99
15+22+22+50	1.10	1.61	1.61	3.67	8.00 (3.7 - 9.2)	2.180 (0.840 - 2.670)	9.57	99
15+22+22+60	1.01	1.48	1.48	4.03	8.00 (3.7 - 9.2)	2.150 (0.840 - 2.640)	9.44	99
15+22+22+71	0.92	1.35	1.35	4.37	8.00 (3.7 - 9.2)	2.130 (0.840 - 2.600)	9.35	99
15+22+25+25	1.33	1.95	2.21	2.21	7.70 (3.7 - 8.8)	2.190 (0.840 - 3.230)	9.62	99
15+22+25+35	1.22	1.79	2.04	2.85	7.90 (3.7 - 9.2)	2.190 (0.840 - 2.710)	9.62	99
15+22+25+42	1.15	1.68	1.91	3.21	7.95 (3.7 - 9.2)	2.180 (0.840 - 2.690)	9.57	99
15+22+25+50	1.07	1.57	1.79	3.57	8.00 (3.7 - 9.2)	2.180 (0.840 - 2.660)	9.57	99
15+22+25+60	0.98	1.44	1.64	3.93	8.00 (3.7 - 9.2)	2.150 (0.840 - 2.630)	9.44	99
15+22+25+71	0.90	1.32	1.50	4.27	8.00 (3.7 - 9.2)	2.130 (0.840 - 2.600)	9.35	99
15+22+35+35	1.11	1.63	2.60	2.60	7.95 (3.7 - 9.2)	2.200 (0.840 - 2.690)	9.66	99
15+22+35+42	1.05	1.54	2.46	2.95	8.00 (3.7 - 9.2)	2.190 (0.840 - 2.670)	9.62	99
15+22+35+50	0.98	1.44	2.30	3.28	8.00 (3.7 - 9.2)	2.180 (0.840 - 2.640)	9.57	99
15+22+35+60	0.91	1.33	2.12	3.64	8.00 (3.7 - 9.2)	2.150 (0.840 - 2.610)	9.44	99
15+22+35+71	0.84	1.23	1.96	3.97	8.00 (3.7 - 9.2)	2.130 (0.840 - 2.580)	9.35	99
15+22+42+42	0.99	1.45	2.78	2.78	8.00 (3.7 - 9.2)	2.170 (0.840 - 2.640)	9.53	99
15+22+42+50	0.93	1.36	2.60	3.10	8.00 (3.7 - 9.2)	2.160 (0.840 - 2.610)	9.49	99
15+22+42+60	0.86	1.27	2.42	3.45	8.00 (3.7 - 9.2)	2.130 (0.840 - 2.580)	9.35	99
15+22+50+50	0.88	1.28	2.92	2.92	8.00 (3.7 - 9.2)	2.150 (0.840 - 2.590)	9.44	99
15+25+25+25	1.30	2.17	2.17	2.17	7.80 (3.7 - 9.2)	2.190 (0.840 - 2.710)	9.62	99
15+25+25+35	1.19	1.98	1.98	2.77	7.92 (3.7 - 9.2)	2.190 (0.840 - 2.710)	9.62	99
15+25+25+42	1.11	1.86	1.86	3.12	7.95 (3.7 - 9.2)	2.180 (0.840 - 2.680)	9.57	99
15+25+25+50	1.04	1.74	1.74	3.48	8.00 (3.7 - 9.2)	2.180 (0.840 - 2.660)	9.57	99
15+25+25+60	0.96	1.60	1.60	3.84	8.00 (3.7 - 9.2)	2.150 (0.840 - 2.620)	9.44	99
15+25+25+71	0.88	1.47	1.47	4.18	8.00 (3.7 - 9.2)	2.130 (0.840 - 2.590)	9.35	99

MXZ-4C80VA COOLING

Indoor units combination	Cooling capacity (kW)					Outdoor unit power consumption(kW)	Current (A)	Power factor(%)
	Unit A	Unit B	Unit C	Unit D	Total			
15+25+35+35	1.09	1.82	2.55	2.55	8.00 (3.7 - 9.2)	2.210 (0.840 - 2.690)	9.71	99
15+25+35+42	1.03	1.71	2.39	2.87	8.00 (3.7 - 9.2)	2.190 (0.840 - 2.660)	9.62	99
15+25+35+50	0.96	1.60	2.24	3.20	8.00 (3.7 - 9.2)	2.180 (0.840 - 2.630)	9.57	99
15+25+35+60	0.89	1.48	2.07	3.56	8.00 (3.7 - 9.2)	2.150 (0.840 - 2.600)	9.44	99
15+25+42+42	0.97	1.61	2.71	2.71	8.00 (3.7 - 9.2)	2.170 (0.840 - 2.640)	9.53	99
15+25+42+50	0.91	1.52	2.55	3.03	8.00 (3.7 - 9.2)	2.160 (0.840 - 2.610)	9.49	99
15+25+42+60	0.85	1.41	2.37	3.38	8.00 (3.7 - 9.2)	2.130 (0.840 - 2.580)	9.35	99
15+25+50+50	0.86	1.43	2.86	2.86	8.00 (3.7 - 9.2)	2.150 (0.840 - 2.580)	9.44	99
15+35+35+35	1.00	2.33	2.33	2.33	8.00 (3.7 - 9.2)	2.210 (0.840 - 2.670)	9.71	99
15+35+35+42	0.94	2.20	2.20	2.65	8.00 (3.7 - 9.2)	2.190 (0.840 - 2.640)	9.62	99
15+35+35+50	0.89	2.07	2.07	2.96	8.00 (3.7 - 9.2)	2.180 (0.840 - 2.610)	9.57	99
15+35+35+60	0.83	1.93	1.93	3.31	8.00 (3.7 - 9.2)	2.150 (0.840 - 2.590)	9.44	99
15+35+42+42	0.90	2.09	2.51	2.51	8.00 (3.7 - 9.2)	2.170 (0.840 - 2.610)	9.53	99
15+35+42+50	0.85	1.97	2.37	2.82	8.00 (3.7 - 9.2)	2.160 (0.840 - 2.590)	9.49	99
15+42+42+42	0.85	2.38	2.38	2.38	8.00 (3.7 - 9.2)	2.150 (0.840 - 2.590)	9.44	99
20+20+20+20	1.90	1.90	1.90	1.90	7.60 (3.7 - 8.4)	2.330 (0.910 - 3.700)	10.23	99
20+20+20+22	1.85	1.85	1.85	2.04	7.60 (3.7 - 8.4)	2.270 (0.900 - 3.820)	9.97	99
20+20+20+25	1.81	1.81	1.81	2.26	7.70 (3.7 - 8.8)	2.270 (0.900 - 3.310)	9.97	99
20+20+20+35	1.65	1.65	1.65	2.89	7.85 (3.7 - 9.2)	2.270 (0.900 - 2.790)	9.97	99
20+20+20+42	1.56	1.56	1.56	3.27	7.95 (3.7 - 9.2)	2.260 (0.900 - 2.780)	9.93	99
20+20+20+50	1.45	1.45	1.45	3.64	8.00 (3.7 - 9.2)	2.260 (0.900 - 2.750)	9.93	99
20+20+20+60	1.33	1.33	1.33	4.00	8.00 (3.7 - 9.2)	2.230 (0.900 - 2.720)	9.79	99
20+20+20+71	1.22	1.22	1.22	4.34	8.00 (3.7 - 9.2)	2.210 (0.900 - 2.680)	9.71	99
20+20+22+22	1.83	1.83	2.02	2.02	7.70 (3.7 - 8.8)	2.230 (0.870 - 3.270)	9.79	99
20+20+22+25	1.77	1.77	1.95	2.21	7.70 (3.7 - 8.8)	2.230 (0.870 - 3.270)	9.79	99
20+20+22+35	1.63	1.63	1.79	2.85	7.90 (3.7 - 9.2)	2.230 (0.870 - 2.750)	9.79	99
20+20+22+42	1.53	1.53	1.68	3.21	7.95 (3.7 - 9.2)	2.220 (0.870 - 2.730)	9.75	99
20+20+22+50	1.43	1.43	1.57	3.57	8.00 (3.7 - 9.2)	2.220 (0.870 - 2.700)	9.75	99
20+20+22+60	1.31	1.31	1.44	3.93	8.00 (3.7 - 9.2)	2.190 (0.870 - 2.670)	9.62	99
20+20+22+71	1.20	1.20	1.32	4.27	8.00 (3.7 - 9.2)	2.170 (0.870 - 2.640)	9.53	99
20+20+25+25	1.73	1.73	2.17	2.17	7.80 (3.7 - 9.2)	2.230 (0.870 - 2.750)	9.79	99
20+20+25+35	1.58	1.58	1.98	2.77	7.92 (3.7 - 9.2)	2.230 (0.870 - 2.750)	9.79	99
20+20+25+42	1.49	1.49	1.86	3.12	7.95 (3.7 - 9.2)	2.220 (0.870 - 2.720)	9.75	99
20+20+25+50	1.39	1.39	1.74	3.48	8.00 (3.7 - 9.2)	2.220 (0.870 - 2.700)	9.75	99
20+20+25+60	1.28	1.28	1.60	3.84	8.00 (3.7 - 9.2)	2.190 (0.870 - 2.660)	9.62	99
20+20+25+71	1.18	1.18	1.47	4.18	8.00 (3.7 - 9.2)	2.170 (0.870 - 2.630)	9.53	99
20+20+35+35	1.45	1.45	2.55	2.55	8.00 (3.7 - 9.2)	2.250 (0.870 - 2.730)	9.88	99
20+20+35+42	1.37	1.37	2.39	2.87	8.00 (3.7 - 9.2)	2.230 (0.870 - 2.700)	9.79	99
20+20+35+50	1.28	1.28	2.24	3.20	8.00 (3.7 - 9.2)	2.220 (0.870 - 2.670)	9.75	99
20+20+35+60	1.19	1.19	2.07	3.56	8.00 (3.7 - 9.2)	2.190 (0.870 - 2.640)	9.62	99

MXZ-4C80VA COOLING

Indoor units combination	Cooling capacity (kW)					Outdoor unit power consumption(kW)	Current (A)	Power factor(%)
	Unit A	Unit B	Unit C	Unit D	Total			
20+20+42+42	1.29	1.29	2.71	2.71	8.00 (3.7 - 9.2)	2.210 (0.870 - 2.680)	9.71	99
20+20+42+50	1.21	1.21	2.55	3.03	8.00 (3.7 - 9.2)	2.200 (0.870 - 2.650)	9.66	99
20+20+42+60	1.13	1.13	2.37	3.38	8.00 (3.7 - 9.2)	2.170 (0.870 - 2.620)	9.53	99
20+20+50+50	1.14	1.14	2.86	2.86	8.00 (3.7 - 9.2)	2.190 (0.870 - 2.620)	9.62	99
20+22+22+22	1.79	1.97	1.97	1.97	7.70 (3.7 - 8.8)	2.190 (0.840 - 3.230)	9.62	99
20+22+22+25	1.75	1.93	1.93	2.19	7.80 (3.7 - 9.2)	2.190 (0.840 - 2.710)	9.62	99
20+22+22+35	1.60	1.76	1.76	2.79	7.90 (3.7 - 9.2)	2.190 (0.840 - 2.710)	9.62	99
20+22+22+42	1.50	1.65	1.65	3.15	7.95 (3.7 - 9.2)	2.180 (0.840 - 2.690)	9.57	99
20+22+22+50	1.40	1.54	1.54	3.51	8.00 (3.7 - 9.2)	2.180 (0.840 - 2.660)	9.57	99
20+22+22+60	1.29	1.42	1.42	3.87	8.00 (3.7 - 9.2)	2.150 (0.840 - 2.630)	9.44	99
20+22+22+71	1.19	1.30	1.30	4.21	8.00 (3.7 - 9.2)	2.130 (0.840 - 2.590)	9.35	99
20+22+25+25	1.71	1.88	2.13	2.13	7.85 (3.7 - 9.2)	2.190 (0.840 - 2.710)	9.62	99
20+22+25+35	1.56	1.71	1.95	2.73	7.95 (3.7 - 9.2)	2.200 (0.840 - 2.710)	9.66	99
20+22+25+42	1.47	1.61	1.83	3.08	8.00 (3.7 - 9.2)	2.190 (0.840 - 2.680)	9.62	99
20+22+25+50	1.37	1.50	1.71	3.42	8.00 (3.7 - 9.2)	2.180 (0.840 - 2.650)	9.57	99
20+22+25+60	1.26	1.39	1.57	3.78	8.00 (3.7 - 9.2)	2.150 (0.840 - 2.620)	9.44	99
20+22+25+71	1.16	1.28	1.45	4.12	8.00 (3.7 - 9.2)	2.130 (0.840 - 2.580)	9.35	99
20+22+35+35	1.43	1.57	2.50	2.50	8.00 (3.7 - 9.2)	2.210 (0.840 - 2.680)	9.71	99
20+22+35+42	1.34	1.48	2.35	2.82	8.00 (3.7 - 9.2)	2.190 (0.840 - 2.660)	9.62	99
20+22+35+50	1.26	1.39	2.20	3.15	8.00 (3.7 - 9.2)	2.180 (0.840 - 2.630)	9.57	99
20+22+35+60	1.17	1.28	2.04	3.50	8.00 (3.7 - 9.2)	2.150 (0.840 - 2.600)	9.44	99
20+22+42+42	1.27	1.40	2.67	2.67	8.00 (3.7 - 9.2)	2.170 (0.840 - 2.630)	9.53	99
20+22+42+50	1.19	1.31	2.51	2.99	8.00 (3.7 - 9.2)	2.160 (0.840 - 2.600)	9.49	99
20+22+42+60	1.11	1.22	2.33	3.33	8.00 (3.7 - 9.2)	2.130 (0.840 - 2.580)	9.35	99
20+22+50+50	1.13	1.24	2.82	2.82	8.00 (3.7 - 9.2)	2.150 (0.840 - 2.580)	9.44	99
20+25+25+25	1.65	2.07	2.07	2.07	7.85 (3.7 - 9.2)	2.190 (0.840 - 2.710)	9.62	99
20+25+25+35	1.51	1.89	1.89	2.65	7.95 (3.7 - 9.2)	2.200 (0.840 - 2.700)	9.66	99
20+25+25+42	1.43	1.79	1.79	3.00	8.00 (3.7 - 9.2)	2.190 (0.840 - 2.670)	9.62	99
20+25+25+50	1.33	1.67	1.67	3.33	8.00 (3.7 - 9.2)	2.180 (0.840 - 2.650)	9.57	99
20+25+25+60	1.23	1.54	1.54	3.69	8.00 (3.7 - 9.2)	2.150 (0.840 - 2.610)	9.44	99
20+25+25+71	1.13	1.42	1.42	4.03	8.00 (3.7 - 9.2)	2.130 (0.840 - 2.580)	9.35	99
20+25+35+35	1.39	1.74	2.43	2.43	8.00 (3.7 - 9.2)	2.210 (0.840 - 2.680)	9.71	99
20+25+35+42	1.31	1.64	2.30	2.75	8.00 (3.7 - 9.2)	2.190 (0.840 - 2.650)	9.62	99
20+25+35+50	1.23	1.54	2.15	3.08	8.00 (3.7 - 9.2)	2.180 (0.840 - 2.620)	9.57	99
20+25+35+60	1.14	1.43	2.00	3.43	8.00 (3.7 - 9.2)	2.150 (0.840 - 2.590)	9.44	99
20+25+42+42	1.24	1.55	2.60	2.60	8.00 (3.7 - 9.2)	2.170 (0.840 - 2.620)	9.53	99
20+25+42+50	1.17	1.46	2.45	2.92	8.00 (3.7 - 9.2)	2.160 (0.840 - 2.600)	9.49	99
20+25+50+50	1.10	1.38	2.76	2.76	8.00 (3.7 - 9.2)	2.150 (0.840 - 2.580)	9.44	99
20+35+35+35	1.28	2.24	2.24	2.24	8.00 (3.7 - 9.2)	2.210 (0.840 - 2.650)	9.71	99
20+35+35+42	1.21	2.12	2.12	2.55	8.00 (3.7 - 9.2)	2.190 (0.840 - 2.630)	9.62	99

MXZ-4C80VA COOLING

Indoor units combination	Cooling capacity (kW)					Outdoor unit power consumption(kW)	Current (A)	Power factor(%)
	Unit A	Unit B	Unit C	Unit D	Total			
20+35+35+50	1.14	2.00	2.00	2.86	8.00 (3.7 - 9.2)	2.180 (0.840 - 2.600)	9.57	99
20+35+42+42	1.15	2.01	2.42	2.42	8.00 (3.7 - 9.2)	2.170 (0.840 - 2.600)	9.53	99
22+22+22+22	1.95	1.95	1.95	1.95	7.80 (3.7 - 9.2)	2.150 (0.810 - 2.670)	9.44	99
22+22+22+25	1.90	1.90	1.90	2.16	7.85 (3.7 - 9.2)	2.150 (0.810 - 2.670)	9.44	99
22+22+22+35	1.73	1.73	1.73	2.75	7.95 (3.7 - 9.2)	2.160 (0.810 - 2.670)	9.49	99
22+22+22+42	1.63	1.63	1.63	3.11	8.00 (3.7 - 9.2)	2.150 (0.810 - 2.640)	9.44	99
22+22+22+50	1.52	1.52	1.52	3.45	8.00 (3.7 - 9.2)	2.140 (0.810 - 2.610)	9.40	99
22+22+22+60	1.40	1.40	1.40	3.81	8.00 (3.7 - 9.2)	2.110 (0.810 - 2.580)	9.27	99
22+22+22+71	1.28	1.28	1.28	4.15	8.00 (3.7 - 9.2)	2.090 (0.810 - 2.550)	9.18	99
22+22+25+25	1.84	1.84	2.09	2.09	7.85 (3.7 - 9.2)	2.150 (0.810 - 2.670)	9.44	99
22+22+25+35	1.68	1.68	1.91	2.68	7.95 (3.7 - 9.2)	2.160 (0.810 - 2.660)	9.49	99
22+22+25+42	1.59	1.59	1.80	3.03	8.00 (3.7 - 9.2)	2.150 (0.810 - 2.640)	9.44	99
22+22+25+50	1.48	1.48	1.68	3.36	8.00 (3.7 - 9.2)	2.140 (0.810 - 2.610)	9.40	99
22+22+25+60	1.36	1.36	1.55	3.72	8.00 (3.7 - 9.2)	2.110 (0.810 - 2.570)	9.27	99
22+22+25+71	1.26	1.26	1.43	4.06	8.00 (3.7 - 9.2)	2.090 (0.810 - 2.540)	9.18	99
22+22+35+35	1.54	1.54	2.46	2.46	8.00 (3.7 - 9.2)	2.170 (0.810 - 2.640)	9.53	99
22+22+35+42	1.45	1.45	2.31	2.78	8.00 (3.7 - 9.2)	2.150 (0.810 - 2.610)	9.44	99
22+22+35+50	1.36	1.36	2.17	3.10	8.00 (3.7 - 9.2)	2.140 (0.810 - 2.580)	9.40	99
22+22+35+60	1.27	1.27	2.01	3.45	8.00 (3.7 - 9.2)	2.110 (0.810 - 2.550)	9.27	99
22+22+42+42	1.38	1.38	2.63	2.63	8.00 (3.7 - 9.2)	2.130 (0.810 - 2.590)	9.35	99
22+22+42+50	1.29	1.29	2.47	2.94	8.00 (3.7 - 9.2)	2.120 (0.810 - 2.560)	9.31	99
22+22+50+50	1.22	1.22	2.78	2.78	8.00 (3.7 - 9.2)	2.110 (0.810 - 2.540)	9.27	99
22+25+25+25	1.79	2.04	2.04	2.04	7.90 (3.7 - 9.2)	2.150 (0.810 - 2.670)	9.44	99
22+25+25+35	1.63	1.86	1.86	2.60	7.95 (3.7 - 9.2)	2.160 (0.810 - 2.650)	9.49	99
22+25+25+42	1.54	1.75	1.75	2.95	8.00 (3.7 - 9.2)	2.150 (0.810 - 2.630)	9.44	99
22+25+25+50	1.44	1.64	1.64	3.28	8.00 (3.7 - 9.2)	2.140 (0.810 - 2.600)	9.40	99
22+25+25+60	1.33	1.52	1.52	3.64	8.00 (3.7 - 9.2)	2.110 (0.810 - 2.570)	9.27	99
22+25+35+35	1.50	1.71	2.39	2.39	8.00 (3.7 - 9.2)	2.170 (0.810 - 2.630)	9.53	99
22+25+35+42	1.42	1.61	2.26	2.71	8.00 (3.7 - 9.2)	2.150 (0.810 - 2.610)	9.44	99
22+25+35+50	1.33	1.52	2.12	3.03	8.00 (3.7 - 9.2)	2.140 (0.810 - 2.580)	9.40	99
22+25+35+60	1.24	1.41	1.97	3.38	8.00 (3.7 - 9.2)	2.110 (0.810 - 2.550)	9.27	99
22+35+35+35	1.39	2.20	2.20	2.20	8.00 (3.7 - 9.2)	2.170 (0.810 - 2.610)	9.53	99
22+35+35+42	1.31	2.09	2.09	2.51	8.00 (3.7 - 9.2)	2.150 (0.810 - 2.580)	9.44	99
22+35+35+50	1.24	1.97	1.97	2.82	8.00 (3.7 - 9.2)	2.140 (0.810 - 2.560)	9.40	99
22+35+42+42	1.25	1.99	2.38	2.38	8.00 (3.7 - 9.2)	2.130 (0.810 - 2.560)	9.35	99
25+25+25+25	1.98	1.98	1.98	1.98	7.92 (3.7 - 9.2)	2.150 (0.810 - 2.670)	9.44	99
25+25+25+35	1.82	1.82	1.82	2.55	8.00 (3.7 - 9.2)	2.170 (0.810 - 2.650)	9.53	99
25+25+25+42	1.71	1.71	1.71	2.87	8.00 (3.7 - 9.2)	2.150 (0.810 - 2.620)	9.44	99
25+25+25+50	1.60	1.60	1.60	3.20	8.00 (3.7 - 9.2)	2.140 (0.810 - 2.590)	9.40	99
25+25+25+60	1.48	1.48	1.48	3.56	8.00 (3.7 - 9.2)	2.110 (0.810 - 2.560)	9.27	99

MXZ-4C80VA COOLING

Indoor units combination	Cooling capacity (kW)					Outdoor unit power consumption(kW)	Current (A)	Power factor(%)
	Unit A	Unit B	Unit C	Unit D	Total			
25+25+35+35	1.67	1.67	2.33	2.33	8.00 (3.7 - 9.2)	2.170 (0.810 - 2.630)	9.53	99
25+25+35+42	1.57	1.57	2.20	2.65	8.00 (3.7 - 9.2)	2.150 (0.810 - 2.600)	9.44	99
25+25+35+50	1.48	1.48	2.07	2.96	8.00 (3.7 - 9.2)	2.140 (0.810 - 2.570)	9.40	99
25+35+35+35	1.54	2.15	2.15	2.15	8.00 (3.7 - 9.2)	2.170 (0.810 - 2.600)	9.53	99
25+35+35+42	1.46	2.04	2.04	2.45	8.00 (3.7 - 9.2)	2.150 (0.810 - 2.580)	9.44	99
35+35+35+35	2.00	2.00	2.00	2.00	8.00 (3.7 - 9.2)	2.170 (0.810 - 2.580)	9.53	99

MXZ-4C80VA HEATING

Indoor units combination	Heating capacity (kW)					Outdoor unit power consumption(kW)	Current (A)	Power factor(%)
	Unit A	Unit B	Unit C	Unit D	Total			
15	1.70				1.70 (1.2 - 3.0)	0.59 (0.56 - 1.67)	2.59	99
20	2.20				2.20 (1.2 - 3.9)	0.76 (0.56 - 2.17)	3.34	99
22	3.30				3.30 (1.2 - 4.2)	0.86 (0.34 - 1.38)	3.78	99
25	3.60				3.60 (1.2 - 4.5)	0.96 (0.34 - 1.51)	4.22	99
35	4.00				4.00 (1.2 - 5.5)	1.11 (0.33 - 1.57)	4.87	99
42	5.40				5.40 (1.3 - 6.5)	1.58 (0.33 - 2.14)	6.94	99
50	7.20				7.20 (1.4 - 7.7)	2.27 (0.33 - 2.71)	9.97	99
60	7.90				7.90 (1.4 - 8.6)	2.27 (0.33 - 3.06)	9.97	99
71	8.60				8.60 (1.6 - 9.2)	2.43 (0.36 - 3.52)	10.67	99
15+15	1.70	1.70			3.40 (1.8 - 5.0)	0.86 (0.62 - 2.78)	3.78	99
15+20	1.67	2.23			3.90 (1.8 - 5.8)	1.01 (0.62 - 3.23)	4.44	99
15+22	1.66	2.44			4.10 (1.8 - 6.1)	1.07 (0.55 - 3.39)	4.70	99
15+25	1.65	2.75			4.40 (1.8 - 6.6)	1.16 (0.69 - 3.67)	5.09	99
15+35	2.16	5.04			7.20 (1.8 - 8.8)	1.76 (0.55 - 3.14)	7.73	99
15+42	1.97	5.53			7.50 (1.8 - 9.3)	1.89 (0.55 - 3.20)	8.30	99
15+50	1.80	6.00			7.80 (1.8 - 9.7)	2.00 (0.55 - 3.23)	8.78	99
15+60	1.72	6.88			8.60 (1.8 - 10.3)	2.27 (0.55 - 3.25)	9.97	99
15+71	1.64	7.76			9.40 (1.8 - 9.5)	2.53 (0.53 - 3.27)	11.11	99
20+20	2.20	2.20			4.40 (1.8 - 6.6)	1.16 (0.62 - 3.67)	5.09	99
20+22	2.62	2.88			5.50 (1.8 - 6.9)	1.37 (0.55 - 3.22)	6.02	99
20+25	2.98	3.72			6.70 (1.8 - 7.5)	1.60 (0.55 - 2.83)	7.03	99
20+35	2.69	4.71			7.40 (1.8 - 9.2)	1.85 (0.55 - 3.19)	8.12	99
20+42	2.48	5.22			7.70 (1.8 - 9.6)	1.96 (0.55 - 3.23)	8.61	99
20+50	2.29	5.71			8.00 (1.8 - 9.8)	2.06 (0.55 - 3.23)	9.05	99
20+60	2.30	6.90			9.20 (1.8 - 10.7)	2.48 (0.55 - 3.26)	10.89	99
20+71	2.07	7.33			9.40 (1.8 - 11.0)	2.47 (0.53 - 3.27)	10.85	99
22+22	3.30	3.30			6.60 (1.8 - 7.2)	1.57 (0.48 - 2.76)	6.90	99
22+25	3.23	3.67			6.90 (1.8 - 8.0)	1.67 (0.48 - 2.95)	7.33	99
22+35	2.89	4.61			7.50 (1.8 - 9.3)	1.89 (0.48 - 3.20)	8.30	99
22+42	2.68	5.12			7.80 (1.8 - 9.7)	2.00 (0.48 - 3.23)	8.78	99
22+50	2.51	5.69			8.20 (1.8 - 10.0)	2.13 (0.48 - 3.24)	9.35	99
22+60	2.52	6.88			9.40 (1.8 - 10.9)	2.55 (0.48 - 3.27)	11.20	99
22+71	2.22	7.18			9.40 (1.8 - 11.1)	2.45 (0.46 - 3.27)	10.76	99
25+25	3.60	3.60			7.20 (1.8 - 8.8)	1.76 (0.48 - 3.14)	7.73	99
25+35	3.17	4.43			7.60 (1.8 - 9.5)	1.93 (0.48 - 3.23)	8.48	99
25+42	2.95	4.95			7.90 (1.8 - 9.7)	2.03 (0.48 - 3.23)	8.92	99
25+50	2.87	5.73			8.60 (1.8 - 10.3)	2.27 (0.48 - 3.25)	9.97	99
25+60	2.76	6.64			9.40 (1.8 - 10.9)	2.54 (0.46 - 3.27)	11.16	99
25+71	2.45	6.95			9.40 (1.8 - 11.1)	2.42 (0.46 - 3.27)	10.63	99
35+35	4.00	4.00			8.00 (1.8 - 9.8)	2.06 (0.48 - 3.23)	9.05	99

MXZ-4C80VA HEATING

Indoor units combination	Heating capacity (kW)					Outdoor unit power consumption(kW)	Current (A)	Power factor(%)
	Unit A	Unit B	Unit C	Unit D	Total			
35+42	4.00	4.80			8.80 (1.8 - 10.4)	2.34 (0.48 - 3.25)	10.28	99
35+50	3.87	5.53			9.40 (1.8 - 10.9)	2.54 (0.46 - 3.27)	11.16	99
35+60	3.46	5.94			9.40 (1.8 - 11.1)	2.43 (0.46 - 3.27)	10.67	99
35+71	3.10	6.30			9.40 (1.9 - 11.2)	2.30 (0.44 - 3.32)	10.10	99
42+42	4.70	4.70			9.40 (1.8 - 10.9)	2.55 (0.46 - 3.27)	11.20	99
42+50	4.29	5.11			9.40 (1.8 - 11.1)	2.46 (0.46 - 3.27)	10.80	99
42+60	3.87	5.53			9.40 (1.9 - 11.2)	2.35 (0.44 - 3.32)	10.32	99
42+71	3.49	5.91			9.40 (1.9 - 11.2)	2.22 (0.44 - 3.32)	9.75	99
50+50	4.70	4.70			9.40 (1.9 - 11.2)	2.37 (0.44 - 3.32)	10.41	99
50+60	4.27	5.13			9.40 (1.9 - 11.2)	2.26 (0.44 - 3.32)	9.93	99
50+71	3.88	5.52			9.40 (1.9 - 11.2)	2.14 (0.44 - 3.32)	9.40	99
60+60	4.70	4.70			9.40 (1.9 - 11.2)	2.14 (0.44 - 3.32)	9.40	99
60+71	4.31	5.09			9.40 (1.9 - 11.2)	2.14 (0.44 - 3.32)	9.40	99
15+15+15	1.70	1.70	1.70		5.10 (2.6 - 8.4)	1.16 (0.66 - 3.90)	5.09	99
15+15+20	1.68	1.68	2.24		5.60 (2.6 - 8.9)	1.16 (0.65 - 3.90)	5.09	99
15+15+22	1.67	1.67	2.45		5.80 (2.6 - 9.1)	1.22 (0.61 - 3.90)	5.36	99
15+15+25	1.66	1.66	2.77		6.10 (2.6 - 9.4)	1.31 (0.61 - 3.90)	5.75	99
15+15+35	1.94	1.94	4.52		8.40 (2.6 - 10.5)	1.91 (0.61 - 3.18)	8.39	99
15+15+42	1.85	1.85	5.19		8.90 (2.6 - 11.3)	2.01 (0.61 - 3.26)	8.83	99
15+15+50	1.73	1.73	5.75		9.20 (2.6 - 11.6)	2.11 (0.61 - 3.34)	9.27	99
15+15+60	1.57	1.57	6.27		9.40 (2.6 - 11.6)	2.17 (0.61 - 3.33)	9.53	99
15+15+71	1.40	1.40	6.61		9.40 (2.6 - 11.6)	2.17 (0.61 - 3.32)	9.53	99
15+20+20	1.66	2.22	2.22		6.10 (2.6 - 9.4)	1.31 (0.65 - 3.90)	5.75	99
15+20+22	1.66	2.21	2.43		6.30 (2.6 - 9.6)	1.37 (0.61 - 3.90)	6.02	99
15+20+25	1.65	2.20	2.75		6.60 (2.6 - 9.9)	1.62 (0.74 - 3.90)	7.11	99
15+20+35	1.89	2.51	4.40		8.80 (2.6 - 10.9)	1.99 (0.61 - 3.20)	8.74	99
15+20+42	1.77	2.36	4.96		9.10 (2.6 - 11.6)	2.07 (0.61 - 3.38)	9.09	99
15+20+50	1.66	2.21	5.53		9.40 (2.6 - 11.6)	2.17 (0.61 - 3.34)	9.53	99
15+20+60	1.48	1.98	5.94		9.40 (2.6 - 11.6)	2.17 (0.61 - 3.32)	9.53	99
15+20+71	1.33	1.77	6.30		9.40 (2.6 - 11.6)	2.17 (0.61 - 3.31)	9.53	99
15+22+22	1.65	2.42	2.42		6.50 (2.6 - 9.8)	1.44 (0.57 - 3.90)	6.32	99
15+22+25	1.77	2.59	2.94		7.30 (2.6 - 10.1)	1.73 (0.57 - 3.66)	7.60	99
15+22+35	1.85	2.72	4.33		8.90 (2.6 - 11.3)	2.01 (0.57 - 3.30)	8.83	99
15+22+42	1.75	2.56	4.89		9.20 (2.6 - 11.6)	2.11 (0.57 - 3.37)	9.27	99
15+22+50	1.62	2.38	5.40		9.40 (2.6 - 11.6)	2.17 (0.57 - 3.33)	9.53	99
15+22+60	1.45	2.13	5.81		9.40 (2.6 - 11.6)	2.17 (0.57 - 3.32)	9.53	99
15+22+71	1.31	1.91	6.18		9.40 (2.6 - 11.6)	2.17 (0.57 - 3.31)	9.53	99
15+25+25	1.94	3.23	3.23		8.40 (2.6 - 10.5)	1.91 (0.57 - 3.18)	8.39	99
15+25+35	1.80	3.00	4.20		9.00 (2.6 - 11.6)	2.04 (0.57 - 3.42)	8.96	99
15+25+42	1.70	2.84	4.76		9.30 (2.6 - 11.6)	2.14 (0.57 - 3.37)	9.40	99

MXZ-4C80VA HEATING

Indoor units combination	Heating capacity (kW)					Outdoor unit power consumption(kW)	Current (A)	Power factor(%)
	Unit A	Unit B	Unit C	Unit D	Total			
15+25+50	1.57	2.61	5.22		9.40 (2.6 - 11.6)	2.17 (0.57 - 3.33)	9.53	99
15+25+60	1.41	2.35	5.64		9.40 (2.6 - 11.6)	2.17 (0.57 - 3.32)	9.53	99
15+25+71	1.27	2.12	6.01		9.40 (2.6 - 11.6)	2.17 (0.57 - 3.31)	9.53	99
15+35+35	1.66	3.87	3.87		9.40 (2.6 - 11.6)	2.17 (0.57 - 3.41)	9.53	99
15+35+42	1.53	3.58	4.29		9.40 (2.6 - 11.6)	2.17 (0.57 - 3.36)	9.53	99
15+35+50	1.41	3.29	4.70		9.40 (2.6 - 11.6)	2.17 (0.57 - 3.32)	9.53	99
15+35+60	1.28	2.99	5.13		9.40 (2.6 - 11.6)	2.17 (0.57 - 3.31)	9.53	99
15+35+71	1.17	2.72	5.52		9.40 (2.6 - 11.6)	2.17 (0.57 - 3.31)	9.53	99
15+42+42	1.42	3.99	3.99		9.40 (2.6 - 11.6)	2.17 (0.57 - 3.31)	9.53	99
15+42+50	1.32	3.69	4.39		9.40 (2.6 - 11.6)	2.17 (0.57 - 3.27)	9.53	99
15+42+60	1.21	3.37	4.82		9.40 (2.6 - 11.6)	2.17 (0.57 - 3.27)	9.53	99
15+42+71	1.10	3.08	5.21		9.40 (2.6 - 11.6)	2.17 (0.57 - 3.27)	9.53	99
15+50+50	1.23	4.09	4.09		9.40 (2.6 - 11.6)	2.17 (0.57 - 3.24)	9.53	99
15+50+60	1.13	3.76	4.51		9.40 (2.6 - 11.6)	2.17 (0.57 - 3.24)	9.53	99
15+50+71	1.04	3.46	4.91		9.40 (2.6 - 11.6)	2.17 (0.57 - 3.24)	9.53	99
20+20+20	2.20	2.20	2.20		6.60 (2.6 - 9.9)	1.62 (0.66 - 3.90)	7.11	99
20+20+22	2.35	2.35	2.59		7.30 (2.6 - 10.1)	1.73 (0.61 - 3.66)	7.60	99
20+20+25	2.58	2.58	3.23		8.40 (2.6 - 10.5)	1.91 (0.61 - 3.18)	8.39	99
20+20+35	2.40	2.40	4.20		9.00 (2.6 - 11.6)	2.04 (0.61 - 3.42)	8.96	99
20+20+42	2.27	2.27	4.76		9.30 (2.6 - 11.6)	2.14 (0.61 - 3.37)	9.40	99
20+20+50	2.09	2.09	5.22		9.40 (2.6 - 11.6)	2.17 (0.61 - 3.33)	9.53	99
20+20+60	1.88	1.88	5.64		9.40 (2.6 - 11.6)	2.17 (0.61 - 3.32)	9.53	99
20+20+71	1.69	1.69	6.01		9.40 (2.6 - 11.6)	2.17 (0.61 - 3.31)	9.53	99
20+22+22	2.50	2.75	2.75		8.00 (2.6 - 10.4)	1.85 (0.57 - 3.30)	8.12	99
20+22+25	2.60	2.86	3.25		8.70 (2.6 - 10.6)	1.96 (0.57 - 3.10)	8.61	99
20+22+35	2.36	2.60	4.14		9.10 (2.6 - 11.6)	2.07 (0.57 - 3.42)	9.09	99
20+22+42	2.24	2.46	4.70		9.40 (2.6 - 11.6)	2.17 (0.57 - 3.37)	9.53	99
20+22+50	2.04	2.25	5.11		9.40 (2.6 - 11.6)	2.17 (0.57 - 3.33)	9.53	99
20+22+60	1.84	2.03	5.53		9.40 (2.6 - 11.6)	2.17 (0.57 - 3.31)	9.53	99
20+22+71	1.66	1.83	5.91		9.40 (2.6 - 11.6)	2.17 (0.57 - 3.31)	9.53	99
20+25+25	2.51	3.14	3.14		8.80 (2.6 - 10.9)	1.99 (0.57 - 3.20)	8.74	99
20+25+35	2.30	2.88	4.03		9.20 (2.6 - 11.6)	2.11 (0.57 - 3.41)	9.27	99
20+25+42	2.16	2.70	4.54		9.40 (2.6 - 11.6)	2.17 (0.57 - 3.36)	9.53	99
20+25+50	1.98	2.47	4.95		9.40 (2.6 - 11.6)	2.17 (0.57 - 3.32)	9.53	99
20+25+60	1.79	2.24	5.37		9.40 (2.6 - 11.6)	2.17 (0.57 - 3.31)	9.53	99
20+25+71	1.62	2.03	5.75		9.40 (2.6 - 11.6)	2.17 (0.57 - 3.31)	9.53	99
20+35+35	2.09	3.66	3.66		9.40 (2.6 - 11.6)	2.17 (0.57 - 3.40)	9.53	99
20+35+42	1.94	3.39	4.07		9.40 (2.6 - 11.6)	2.17 (0.57 - 3.35)	9.53	99
20+35+50	1.79	3.13	4.48		9.40 (2.6 - 11.6)	2.17 (0.57 - 3.31)	9.53	99
20+35+60	1.63	2.86	4.90		9.40 (2.6 - 11.6)	2.17 (0.57 - 3.31)	9.53	99

MXZ-4C80VA HEATING

Indoor units combination	Heating capacity (kW)					Outdoor unit power consumption(kW)	Current (A)	Power factor(%)
	Unit A	Unit B	Unit C	Unit D	Total			
20+35+71	1.49	2.61	5.30		9.40 (2.6 - 11.6)	2.17 (0.57 - 3.31)	9.53	99
20+42+42	1.81	3.80	3.80		9.40 (2.6 - 11.6)	2.17 (0.57 - 3.30)	9.53	99
20+42+50	1.68	3.53	4.20		9.40 (2.6 - 11.6)	2.17 (0.57 - 3.27)	9.53	99
20+42+60	1.54	3.24	4.62		9.40 (2.6 - 11.6)	2.17 (0.57 - 3.27)	9.53	99
20+42+71	1.41	2.97	5.02		9.40 (2.6 - 11.6)	2.17 (0.57 - 3.27)	9.53	99
20+50+50	1.57	3.92	3.92		9.40 (2.6 - 11.6)	2.17 (0.57 - 3.24)	9.53	99
20+50+60	1.45	3.62	4.34		9.40 (2.6 - 11.6)	2.17 (0.57 - 3.24)	9.53	99
20+50+71	1.33	3.33	4.73		9.40 (2.6 - 11.6)	2.17 (0.57 - 3.24)	9.53	99
22+22+22	2.90	2.90	2.90		8.70 (2.6 - 10.6)	1.96 (0.53 - 3.06)	8.61	99
22+22+25	2.81	2.81	3.19		8.80 (2.6 - 10.9)	1.99 (0.53 - 3.20)	8.74	99
22+22+35	2.56	2.56	4.08		9.20 (2.6 - 11.6)	2.11 (0.53 - 3.41)	9.27	99
22+22+42	2.40	2.40	4.59		9.40 (2.6 - 11.6)	2.17 (0.53 - 3.37)	9.53	99
22+22+50	2.20	2.20	5.00		9.40 (2.6 - 11.6)	2.17 (0.53 - 3.32)	9.53	99
22+22+60	1.99	1.99	5.42		9.40 (2.6 - 11.6)	2.17 (0.53 - 3.31)	9.53	99
22+22+71	1.80	1.80	5.80		9.40 (2.6 - 11.6)	2.17 (0.53 - 3.31)	9.53	99
22+25+25	2.72	3.09	3.09		8.90 (2.6 - 11.3)	2.01 (0.53 - 3.30)	8.83	99
22+25+35	2.50	2.84	3.97		9.30 (2.6 - 11.6)	2.14 (0.53 - 3.41)	9.40	99
22+25+42	2.32	2.64	4.44		9.40 (2.6 - 11.6)	2.17 (0.53 - 3.36)	9.53	99
22+25+50	2.13	2.42	4.85		9.40 (2.6 - 11.6)	2.17 (0.53 - 3.32)	9.53	99
22+25+60	1.93	2.20	5.27		9.40 (2.6 - 11.6)	2.17 (0.53 - 3.31)	9.53	99
22+25+71	1.75	1.99	5.66		9.40 (2.6 - 11.6)	2.17 (0.53 - 3.31)	9.53	99
22+35+35	2.25	3.58	3.58		9.40 (2.6 - 11.6)	2.17 (0.53 - 3.40)	9.53	99
22+35+42	2.09	3.32	3.99		9.40 (2.6 - 11.6)	2.17 (0.53 - 3.35)	9.53	99
22+35+50	1.93	3.07	4.39		9.40 (2.6 - 11.6)	2.17 (0.53 - 3.31)	9.53	99
22+35+60	1.77	2.81	4.82		9.40 (2.6 - 11.6)	2.17 (0.53 - 3.31)	9.53	99
22+35+71	1.62	2.57	5.21		9.40 (2.6 - 11.6)	2.17 (0.53 - 3.31)	9.53	99
22+42+42	1.95	3.72	3.72		9.40 (2.6 - 11.6)	2.17 (0.53 - 3.30)	9.53	99
22+42+50	1.81	3.46	4.12		9.40 (2.6 - 11.6)	2.17 (0.53 - 3.27)	9.53	99
22+42+60	1.67	3.18	4.55		9.40 (2.6 - 11.6)	2.17 (0.53 - 3.27)	9.53	99
22+42+71	1.53	2.92	4.94		9.40 (2.6 - 11.6)	2.17 (0.53 - 3.27)	9.53	99
22+50+50	1.70	3.85	3.85		9.40 (2.6 - 11.6)	2.17 (0.53 - 3.24)	9.53	99
22+50+60	1.57	3.56	4.27		9.40 (2.6 - 11.6)	2.17 (0.53 - 3.24)	9.53	99
22+50+71	1.45	3.29	4.67		9.40 (2.6 - 11.6)	2.17 (0.53 - 3.24)	9.53	99
25+25+25	3.00	3.00	3.00		9.00 (2.6 - 11.6)	2.04 (0.53 - 3.42)	8.96	99
25+25+35	2.76	2.76	3.87		9.40 (2.6 - 11.6)	2.17 (0.53 - 3.41)	9.53	99
25+25+42	2.55	2.55	4.29		9.40 (2.6 - 11.6)	2.17 (0.53 - 3.36)	9.53	99
25+25+50	2.35	2.35	4.70		9.40 (2.6 - 11.6)	2.17 (0.53 - 3.32)	9.53	99
25+25+60	2.14	2.14	5.13		9.40 (2.6 - 11.6)	2.17 (0.53 - 3.31)	9.53	99
25+25+71	1.94	1.94	5.52		9.40 (2.6 - 11.6)	2.17 (0.53 - 3.31)	9.53	99
25+35+35	2.47	3.46	3.46		9.40 (2.6 - 11.6)	2.17 (0.53 - 3.39)	9.53	99

MXZ-4C80VA HEATING

Indoor units combination	Heating capacity (kW)					Outdoor unit power consumption(kW)	Current (A)	Power factor(%)
	Unit A	Unit B	Unit C	Unit D	Total			
25+35+42	2.30	3.23	3.87		9.40 (2.6 - 11.6)	2.17 (0.53 - 3.34)	9.53	99
25+35+50	2.14	2.99	4.27		9.40 (2.6 - 11.6)	2.17 (0.53 - 3.31)	9.53	99
25+35+60	1.96	2.74	4.70		9.40 (2.6 - 11.6)	2.17 (0.53 - 3.31)	9.53	99
25+35+71	1.79	2.51	5.09		9.40 (2.6 - 11.6)	2.17 (0.53 - 3.31)	9.53	99
25+42+42	2.16	3.62	3.62		9.40 (2.6 - 11.6)	2.17 (0.53 - 3.30)	9.53	99
25+42+50	2.01	3.37	4.02		9.40 (2.6 - 11.6)	2.17 (0.53 - 3.27)	9.53	99
25+42+60	1.85	3.11	4.44		9.40 (2.6 - 11.6)	2.17 (0.53 - 3.27)	9.53	99
25+42+71	1.70	2.86	4.84		9.40 (2.6 - 11.6)	2.17 (0.53 - 3.27)	9.53	99
25+50+50	1.88	3.76	3.76		9.40 (2.6 - 11.6)	2.17 (0.53 - 3.24)	9.53	99
25+50+60	1.74	3.48	4.18		9.40 (2.6 - 11.6)	2.17 (0.53 - 3.24)	9.53	99
35+35+35	3.13	3.13	3.13		9.40 (2.6 - 11.6)	2.17 (0.53 - 3.38)	9.53	99
35+35+42	2.94	2.94	3.53		9.40 (2.6 - 11.6)	2.17 (0.53 - 3.34)	9.53	99
35+35+50	2.74	2.74	3.92		9.40 (2.6 - 11.6)	2.17 (0.53 - 3.31)	9.53	99
35+35+60	2.53	2.53	4.34		9.40 (2.6 - 11.6)	2.17 (0.53 - 3.31)	9.53	99
35+35+71	2.33	2.33	4.73		9.40 (2.6 - 11.6)	2.17 (0.53 - 3.31)	9.53	99
35+42+42	2.76	3.32	3.32		9.40 (2.6 - 11.6)	2.17 (0.53 - 3.30)	9.53	99
35+42+50	2.59	3.11	3.70		9.40 (2.6 - 11.6)	2.17 (0.53 - 3.27)	9.53	99
35+42+60	2.40	2.88	4.12		9.40 (2.6 - 11.6)	2.17 (0.53 - 3.27)	9.53	99
35+50+50	2.44	3.48	3.48		9.40 (2.6 - 11.6)	2.17 (0.53 - 3.24)	9.53	99
35+50+60	2.27	3.24	3.89		9.40 (2.6 - 11.6)	2.17 (0.53 - 3.24)	9.53	99
15+15+15+15	1.70	1.70	1.70	1.70	6.80 (3.4 - 9.3)	1.53 (0.79 - 3.90)	6.72	99
15+15+15+20	1.64	1.64	1.64	2.18	7.10 (3.4 - 9.7)	1.69 (0.79 - 3.90)	7.42	99
15+15+15+22	1.61	1.61	1.61	2.36	7.20 (3.4 - 9.8)	1.75 (0.74 - 3.90)	7.69	99
15+15+15+25	1.59	1.59	1.59	2.64	7.40 (3.4 - 10.1)	1.86 (0.74 - 3.90)	8.17	99
15+15+15+35	1.50	1.50	1.50	3.50	8.00 (3.4 - 10.8)	2.18 (0.94 - 3.90)	9.57	99
15+15+15+42	1.59	1.59	1.59	4.44	9.20 (3.4 - 11.5)	2.01 (0.74 - 3.44)	8.83	99
15+15+15+50	1.48	1.48	1.48	4.95	9.40 (3.4 - 11.6)	1.95 (0.74 - 3.37)	8.56	99
15+15+15+60	1.34	1.34	1.34	5.37	9.40 (3.4 - 11.6)	1.89 (0.74 - 3.34)	8.30	99
15+15+15+71	1.22	1.22	1.22	5.75	9.40 (3.4 - 11.6)	1.86 (0.74 - 3.30)	8.17	99
15+15+20+20	1.59	1.59	2.11	2.11	7.40 (3.4 - 10.1)	1.86 (0.79 - 3.90)	8.17	99
15+15+20+22	1.56	1.56	2.08	2.29	7.50 (3.4 - 10.2)	1.91 (0.74 - 3.90)	8.39	99
15+15+20+25	1.54	1.54	2.05	2.57	7.70 (3.4 - 10.4)	2.02 (0.74 - 3.90)	8.87	99
15+15+20+35	1.57	1.57	2.09	3.66	8.90 (3.4 - 11.3)	2.07 (0.74 - 3.60)	9.09	99
15+15+20+42	1.53	1.53	2.04	4.29	9.40 (3.4 - 11.6)	1.97 (0.74 - 3.37)	8.65	99
15+15+20+50	1.41	1.41	1.88	4.70	9.40 (3.4 - 11.6)	1.92 (0.74 - 3.36)	8.43	99
15+15+20+60	1.28	1.28	1.71	5.13	9.40 (3.4 - 11.6)	1.89 (0.74 - 3.32)	8.30	99
15+15+20+71	1.17	1.17	1.55	5.52	9.40 (3.4 - 11.6)	1.86 (0.74 - 3.28)	8.17	99
15+15+22+22	1.54	1.54	2.26	2.26	7.60 (3.4 - 10.3)	1.96 (0.69 - 3.90)	8.61	99
15+15+22+25	1.52	1.52	2.23	2.53	7.80 (3.4 - 10.6)	2.07 (0.69 - 3.90)	9.09	99
15+15+22+35	1.59	1.59	2.33	3.70	9.20 (3.4 - 11.5)	2.03 (0.69 - 3.48)	8.92	99

MXZ-4C80VA HEATING

Indoor units combination	Heating capacity (kW)					Outdoor unit power consumption(kW)	Current (A)	Power factor(%)
	Unit A	Unit B	Unit C	Unit D	Total			
15+15+22+42	1.50	1.50	2.20	4.20	9.40 (3.4 - 11.6)	1.96 (0.69 - 3.37)	8.61	99
15+15+22+50	1.38	1.38	2.03	4.61	9.40 (3.4 - 11.6)	1.92 (0.69 - 3.35)	8.43	99
15+15+22+60	1.26	1.26	1.85	5.04	9.40 (3.4 - 11.6)	1.88 (0.69 - 3.31)	8.26	99
15+15+22+71	1.15	1.15	1.68	5.43	9.40 (3.4 - 11.6)	1.86 (0.69 - 3.27)	8.17	99
15+15+25+25	1.50	1.50	2.50	2.50	8.00 (3.4 - 10.8)	2.18 (0.89 - 3.90)	9.57	99
15+15+25+35	1.57	1.57	2.61	3.66	9.40 (3.4 - 11.6)	2.00 (0.69 - 3.42)	8.78	99
15+15+25+42	1.45	1.45	2.42	4.07	9.40 (3.4 - 11.6)	1.95 (0.69 - 3.36)	8.56	99
15+15+25+50	1.34	1.34	2.24	4.48	9.40 (3.4 - 11.6)	1.92 (0.69 - 3.34)	8.43	99
15+15+25+60	1.23	1.23	2.04	4.90	9.40 (3.4 - 11.6)	1.88 (0.69 - 3.30)	8.26	99
15+15+25+71	1.12	1.12	1.87	5.30	9.40 (3.4 - 11.6)	1.86 (0.69 - 3.26)	8.17	99
15+15+35+35	1.41	1.41	3.29	3.29	9.40 (3.4 - 11.6)	1.95 (0.69 - 3.39)	8.56	99
15+15+35+42	1.32	1.32	3.07	3.69	9.40 (3.4 - 11.6)	1.93 (0.69 - 3.32)	8.48	99
15+15+35+50	1.23	1.23	2.86	4.09	9.40 (3.4 - 11.6)	1.91 (0.69 - 3.30)	8.39	99
15+15+35+60	1.13	1.13	2.63	4.51	9.40 (3.4 - 11.6)	1.88 (0.69 - 3.26)	8.26	99
15+15+35+71	1.04	1.04	2.42	4.91	9.40 (3.4 - 11.6)	1.85 (0.69 - 3.22)	8.12	99
15+15+42+42	1.24	1.24	3.46	3.46	9.40 (3.4 - 11.6)	1.90 (0.69 - 3.25)	8.34	99
15+15+42+50	1.16	1.16	3.24	3.85	9.40 (3.4 - 11.6)	1.89 (0.69 - 3.23)	8.30	99
15+15+42+60	1.07	1.07	2.99	4.27	9.40 (3.4 - 11.6)	1.85 (0.69 - 3.19)	8.12	99
15+15+42+71	0.99	0.99	2.76	4.67	9.40 (3.4 - 11.6)	1.83 (0.69 - 3.16)	8.04	99
15+15+50+50	1.08	1.08	3.62	3.62	9.40 (3.4 - 11.6)	1.88 (0.69 - 3.21)	8.26	99
15+15+50+60	1.01	1.01	3.36	4.03	9.40 (3.4 - 11.6)	1.84 (0.69 - 3.17)	8.08	99
15+20+20+20	1.54	2.05	2.05	2.05	7.70 (3.4 - 10.4)	2.02 (0.79 - 3.90)	8.87	99
15+20+20+22	1.52	2.03	2.03	2.23	7.80 (3.4 - 10.6)	2.07 (0.74 - 3.90)	9.09	99
15+20+20+25	1.50	2.00	2.00	2.50	8.00 (3.4 - 10.8)	2.18 (0.94 - 3.90)	9.57	99
15+20+20+35	1.57	2.09	2.09	3.66	9.40 (3.4 - 11.6)	2.00 (0.74 - 3.42)	8.78	99
15+20+20+42	1.45	1.94	1.94	4.07	9.40 (3.4 - 11.6)	1.95 (0.74 - 3.36)	8.56	99
15+20+20+50	1.34	1.79	1.79	4.48	9.40 (3.4 - 11.6)	1.92 (0.74 - 3.34)	8.43	99
15+20+20+60	1.23	1.63	1.63	4.90	9.40 (3.4 - 11.6)	1.88 (0.74 - 3.30)	8.26	99
15+20+20+71	1.12	1.49	1.49	5.30	9.40 (3.4 - 11.6)	1.86 (0.74 - 3.26)	8.17	99
15+20+22+22	1.50	2.00	2.20	2.20	7.90 (3.4 - 10.7)	2.13 (0.69 - 3.90)	9.35	99
15+20+22+25	1.53	2.04	2.24	2.55	8.35 (3.4 - 11.0)	2.14 (0.69 - 3.78)	9.40	99
15+20+22+35	1.53	2.04	2.25	3.58	9.40 (3.4 - 11.6)	1.99 (0.69 - 3.41)	8.74	99
15+20+22+42	1.42	1.90	2.09	3.99	9.40 (3.4 - 11.6)	1.94 (0.69 - 3.35)	8.52	99
15+20+22+50	1.32	1.76	1.93	4.39	9.40 (3.4 - 11.6)	1.92 (0.69 - 3.33)	8.43	99
15+20+22+60	1.21	1.61	1.77	4.82	9.40 (3.4 - 11.6)	1.88 (0.69 - 3.29)	8.26	99
15+20+22+71	1.10	1.47	1.62	5.21	9.40 (3.4 - 11.6)	1.86 (0.69 - 3.25)	8.17	99
15+20+25+25	1.57	2.09	2.62	2.62	8.90 (3.4 - 11.3)	2.07 (0.69 - 3.60)	9.09	99
15+20+25+35	1.48	1.98	2.47	3.46	9.40 (3.4 - 11.6)	1.98 (0.69 - 3.40)	8.70	99
15+20+25+42	1.38	1.84	2.30	3.87	9.40 (3.4 - 11.6)	1.93 (0.69 - 3.34)	8.48	99
15+20+25+50	1.28	1.71	2.14	4.27	9.40 (3.4 - 11.6)	1.92 (0.69 - 3.32)	8.43	99

MXZ-4C80VA HEATING

Indoor units combination	Heating capacity (kW)					Outdoor unit power consumption(kW)	Current (A)	Power factor(%)
	Unit A	Unit B	Unit C	Unit D	Total			
15+20+25+60	1.18	1.57	1.96	4.70	9.40 (3.4 - 11.6)	1.88 (0.69 - 3.28)	8.26	99
15+20+25+71	1.08	1.44	1.79	5.09	9.40 (3.4 - 11.6)	1.85 (0.69 - 3.24)	8.12	99
15+20+35+35	1.34	1.79	3.13	3.13	9.40 (3.4 - 11.6)	1.95 (0.69 - 3.37)	8.56	99
15+20+35+42	1.26	1.68	2.94	3.53	9.40 (3.4 - 11.6)	1.92 (0.69 - 3.30)	8.43	99
15+20+35+50	1.18	1.57	2.74	3.92	9.40 (3.4 - 11.6)	1.91 (0.69 - 3.28)	8.39	99
15+20+35+60	1.08	1.45	2.53	4.34	9.40 (3.4 - 11.6)	1.88 (0.69 - 3.24)	8.26	99
15+20+35+71	1.00	1.33	2.33	4.73	9.40 (3.4 - 11.6)	1.85 (0.69 - 3.20)	8.12	99
15+20+42+42	1.18	1.58	3.32	3.32	9.40 (3.4 - 11.6)	1.90 (0.69 - 3.23)	8.34	99
15+20+42+50	1.11	1.48	3.11	3.70	9.40 (3.4 - 11.6)	1.89 (0.69 - 3.21)	8.30	99
15+20+42+60	1.03	1.37	2.88	4.12	9.40 (3.4 - 11.6)	1.85 (0.69 - 3.17)	8.12	99
15+20+50+50	1.04	1.39	3.48	3.48	9.40 (3.4 - 11.6)	1.87 (0.69 - 3.19)	8.21	99
15+20+50+60	0.97	1.30	3.24	3.89	9.40 (3.4 - 11.6)	1.84 (0.69 - 3.17)	8.08	99
15+22+22+22	1.52	2.23	2.23	2.23	8.20 (3.4 - 10.9)	2.16 (0.64 - 3.84)	9.49	99
15+22+22+25	1.55	2.28	2.28	2.59	8.70 (3.4 - 11.2)	2.10 (0.64 - 3.66)	9.22	99
15+22+22+35	1.50	2.20	2.20	3.50	9.40 (3.4 - 11.6)	1.98 (0.64 - 3.41)	8.70	99
15+22+22+42	1.40	2.05	2.05	3.91	9.40 (3.4 - 11.6)	1.93 (0.64 - 3.35)	8.48	99
15+22+22+50	1.29	1.90	1.90	4.31	9.40 (3.4 - 11.6)	1.92 (0.64 - 3.32)	8.43	99
15+22+22+60	1.18	1.74	1.74	4.74	9.40 (3.4 - 11.6)	1.88 (0.64 - 3.28)	8.26	99
15+22+22+71	1.08	1.59	1.59	5.13	9.40 (3.4 - 11.6)	1.86 (0.64 - 3.24)	8.17	99
15+22+25+25	1.59	2.33	2.64	2.64	9.20 (3.4 - 11.5)	2.03 (0.64 - 3.48)	8.92	99
15+22+25+35	1.45	2.13	2.42	3.39	9.40 (3.4 - 11.6)	1.97 (0.64 - 3.40)	8.65	99
15+22+25+42	1.36	1.99	2.26	3.80	9.40 (3.4 - 11.6)	1.93 (0.64 - 3.33)	8.48	99
15+22+25+50	1.26	1.85	2.10	4.20	9.40 (3.4 - 11.6)	1.91 (0.64 - 3.31)	8.39	99
15+22+25+60	1.16	1.70	1.93	4.62	9.40 (3.4 - 11.6)	1.88 (0.64 - 3.27)	8.26	99
15+22+25+71	1.06	1.55	1.77	5.02	9.40 (3.4 - 11.6)	1.85 (0.64 - 3.23)	8.12	99
15+22+35+35	1.32	1.93	3.07	3.07	9.40 (3.4 - 11.6)	1.95 (0.64 - 3.36)	8.56	99
15+22+35+42	1.24	1.81	2.89	3.46	9.40 (3.4 - 11.6)	1.92 (0.64 - 3.29)	8.43	99
15+22+35+50	1.16	1.70	2.70	3.85	9.40 (3.4 - 11.6)	1.91 (0.64 - 3.27)	8.39	99
15+22+35+60	1.07	1.57	2.49	4.27	9.40 (3.4 - 11.6)	1.87 (0.64 - 3.23)	8.21	99
15+22+35+71	0.99	1.45	2.30	4.67	9.40 (3.4 - 11.6)	1.85 (0.64 - 3.20)	8.12	99
15+22+42+42	1.17	1.71	3.26	3.26	9.40 (3.4 - 11.6)	1.90 (0.64 - 3.23)	8.34	99
15+22+42+50	1.09	1.60	3.06	3.64	9.40 (3.4 - 11.6)	1.89 (0.64 - 3.20)	8.30	99
15+22+42+60	1.01	1.49	2.84	4.06	9.40 (3.4 - 11.6)	1.85 (0.64 - 3.16)	8.12	99
15+22+50+50	1.03	1.51	3.43	3.43	9.40 (3.4 - 11.6)	1.87 (0.64 - 3.18)	8.21	99
15+25+25+25	1.57	2.61	2.61	2.61	9.40 (3.4 - 11.6)	2.00 (0.64 - 3.42)	8.78	99
15+25+25+35	1.41	2.35	2.35	3.29	9.40 (3.4 - 11.6)	1.95 (0.64 - 3.39)	8.56	99
15+25+25+42	1.32	2.20	2.20	3.69	9.40 (3.4 - 11.6)	1.93 (0.64 - 3.32)	8.48	99
15+25+25+50	1.23	2.04	2.04	4.09	9.40 (3.4 - 11.6)	1.91 (0.64 - 3.30)	8.39	99
15+25+25+60	1.13	1.88	1.88	4.51	9.40 (3.4 - 11.6)	1.88 (0.64 - 3.26)	8.26	99
15+25+25+71	1.04	1.73	1.73	4.91	9.40 (3.4 - 11.6)	1.85 (0.64 - 3.22)	8.12	99

MXZ-4C80VA HEATING

Indoor units combination	Heating capacity (kW)					Outdoor unit power consumption(kW)	Current (A)	Power factor(%)
	Unit A	Unit B	Unit C	Unit D	Total			
15+25+35+35	1.28	2.14	2.99	2.99	9.40 (3.4 - 11.6)	1.95 (0.64 - 3.35)	8.56	99
15+25+35+42	1.21	2.01	2.81	3.37	9.40 (3.4 - 11.6)	1.92 (0.64 - 3.28)	8.43	99
15+25+35+50	1.13	1.88	2.63	3.76	9.40 (3.4 - 11.6)	1.91 (0.64 - 3.26)	8.39	99
15+25+35+60	1.04	1.74	2.44	4.18	9.40 (3.4 - 11.6)	1.87 (0.64 - 3.22)	8.21	99
15+25+42+42	1.14	1.90	3.18	3.18	9.40 (3.4 - 11.6)	1.90 (0.64 - 3.21)	8.34	99
15+25+42+50	1.07	1.78	2.99	3.56	9.40 (3.4 - 11.6)	1.88 (0.64 - 3.19)	8.26	99
15+25+42+60	0.99	1.65	2.78	3.97	9.40 (3.4 - 11.6)	1.85 (0.64 - 3.16)	8.12	99
15+25+50+50	1.01	1.68	3.36	3.36	9.40 (3.4 - 11.6)	1.87 (0.64 - 3.17)	8.21	99
15+35+35+35	1.18	2.74	2.74	2.74	9.40 (3.4 - 11.6)	1.94 (0.64 - 3.31)	8.52	99
15+35+35+42	1.11	2.59	2.59	3.11	9.40 (3.4 - 11.6)	1.92 (0.64 - 3.24)	8.43	99
15+35+35+50	1.04	2.44	2.44	3.48	9.40 (3.4 - 11.6)	1.90 (0.64 - 3.22)	8.34	99
15+35+35+60	0.97	2.27	2.27	3.89	9.40 (3.4 - 11.6)	1.87 (0.64 - 3.20)	8.21	99
15+35+42+42	1.05	2.46	2.95	2.95	9.40 (3.4 - 11.6)	1.89 (0.64 - 3.17)	8.30	99
15+35+42+50	0.99	2.32	2.78	3.31	9.40 (3.4 - 11.6)	1.88 (0.64 - 3.16)	8.26	99
15+42+42+42	1.00	2.80	2.80	2.80	9.40 (3.4 - 11.6)	1.87 (0.64 - 3.11)	8.21	99
20+20+20+20	2.00	2.00	2.00	2.00	8.00 (3.4 - 10.8)	2.18 (0.79 - 3.90)	9.57	99
20+20+20+22	2.04	2.04	2.04	2.24	8.35 (3.4 - 11.0)	2.14 (0.74 - 3.78)	9.40	99
20+20+20+25	2.09	2.09	2.09	2.62	8.90 (3.4 - 11.3)	2.07 (0.74 - 3.60)	9.09	99
20+20+20+35	1.98	1.98	1.98	3.46	9.40 (3.4 - 11.6)	1.98 (0.74 - 3.40)	8.70	99
20+20+20+42	1.84	1.84	1.84	3.87	9.40 (3.4 - 11.6)	1.93 (0.74 - 3.34)	8.48	99
20+20+20+50	1.71	1.71	1.71	4.27	9.40 (3.4 - 11.6)	1.92 (0.74 - 3.32)	8.43	99
20+20+20+60	1.57	1.57	1.57	4.70	9.40 (3.4 - 11.6)	1.88 (0.74 - 3.28)	8.26	99
20+20+20+71	1.44	1.44	1.44	5.09	9.40 (3.4 - 11.6)	1.85 (0.74 - 3.24)	8.12	99
20+20+22+22	2.07	2.07	2.28	2.28	8.70 (3.4 - 11.2)	2.10 (0.69 - 3.66)	9.22	99
20+20+22+25	2.11	2.11	2.33	2.64	9.20 (3.4 - 11.5)	2.03 (0.69 - 3.48)	8.92	99
20+20+22+35	1.94	1.94	2.13	3.39	9.40 (3.4 - 11.6)	1.97 (0.69 - 3.40)	8.65	99
20+20+22+42	1.81	1.81	1.99	3.80	9.40 (3.4 - 11.6)	1.93 (0.69 - 3.33)	8.48	99
20+20+22+50	1.68	1.68	1.85	4.20	9.40 (3.4 - 11.6)	1.91 (0.69 - 3.31)	8.39	99
20+20+22+60	1.54	1.54	1.70	4.62	9.40 (3.4 - 11.6)	1.88 (0.69 - 3.27)	8.26	99
20+20+22+71	1.41	1.41	1.55	5.02	9.40 (3.4 - 11.6)	1.85 (0.69 - 3.23)	8.12	99
20+20+25+25	2.09	2.09	2.61	2.61	9.40 (3.4 - 11.6)	2.00 (0.69 - 3.42)	8.78	99
20+20+25+35	1.88	1.88	2.35	3.29	9.40 (3.4 - 11.6)	1.95 (0.69 - 3.39)	8.56	99
20+20+25+42	1.76	1.76	2.20	3.69	9.40 (3.4 - 11.6)	1.93 (0.69 - 3.32)	8.48	99
20+20+25+50	1.63	1.63	2.04	4.09	9.40 (3.4 - 11.6)	1.91 (0.69 - 3.30)	8.39	99
20+20+25+60	1.50	1.50	1.88	4.51	9.40 (3.4 - 11.6)	1.88 (0.69 - 3.26)	8.26	99
20+20+25+71	1.38	1.38	1.73	4.91	9.40 (3.4 - 11.6)	1.85 (0.69 - 3.22)	8.12	99
20+20+35+35	1.71	1.71	2.99	2.99	9.40 (3.4 - 11.6)	1.95 (0.69 - 3.35)	8.56	99
20+20+35+42	1.61	1.61	2.81	3.37	9.40 (3.4 - 11.6)	1.92 (0.69 - 3.28)	8.43	99
20+20+35+50	1.50	1.50	2.63	3.76	9.40 (3.4 - 11.6)	1.91 (0.69 - 3.26)	8.39	99
20+20+35+60	1.39	1.39	2.44	4.18	9.40 (3.4 - 11.6)	1.87 (0.69 - 3.22)	8.21	99

MXZ-4C80VA HEATING

Indoor units combination	Heating capacity (kW)					Outdoor unit power consumption(kW)	Current (A)	Power factor(%)
	Unit A	Unit B	Unit C	Unit D	Total			
20+20+42+42	1.52	1.52	3.18	3.18	9.40 (3.4 - 11.6)	1.90 (0.69 - 3.21)	8.34	99
20+20+42+50	1.42	1.42	2.99	3.56	9.40 (3.4 - 11.6)	1.88 (0.69 - 3.19)	8.26	99
20+20+42+60	1.32	1.32	2.78	3.97	9.40 (3.4 - 11.6)	1.85 (0.69 - 3.16)	8.12	99
20+20+50+50	1.34	1.34	3.36	3.36	9.40 (3.4 - 11.6)	1.87 (0.69 - 3.17)	8.21	99
20+22+22+22	2.10	2.32	2.32	2.32	9.05 (3.4 - 11.4)	2.05 (0.64 - 3.54)	9.00	99
20+22+22+25	2.11	2.32	2.32	2.64	9.40 (3.4 - 11.6)	2.01 (0.64 - 3.42)	8.83	99
20+22+22+35	1.90	2.09	2.09	3.32	9.40 (3.4 - 11.6)	1.96 (0.64 - 3.39)	8.61	99
20+22+22+42	1.77	1.95	1.95	3.72	9.40 (3.4 - 11.6)	1.93 (0.64 - 3.33)	8.48	99
20+22+22+50	1.65	1.81	1.81	4.12	9.40 (3.4 - 11.6)	1.91 (0.64 - 3.30)	8.39	99
20+22+22+60	1.52	1.67	1.67	4.55	9.40 (3.4 - 11.6)	1.88 (0.64 - 3.26)	8.26	99
20+22+22+71	1.39	1.53	1.53	4.94	9.40 (3.4 - 11.6)	1.85 (0.64 - 3.22)	8.12	99
20+22+25+25	2.04	2.25	2.55	2.55	9.40 (3.4 - 11.6)	1.99 (0.64 - 3.41)	8.74	99
20+22+25+35	1.84	2.03	2.30	3.23	9.40 (3.4 - 11.6)	1.95 (0.64 - 3.38)	8.56	99
20+22+25+42	1.72	1.90	2.16	3.62	9.40 (3.4 - 11.6)	1.93 (0.64 - 3.31)	8.48	99
20+22+25+50	1.61	1.77	2.01	4.02	9.40 (3.4 - 11.6)	1.91 (0.64 - 3.29)	8.39	99
20+22+25+60	1.48	1.63	1.85	4.44	9.40 (3.4 - 11.6)	1.88 (0.64 - 3.25)	8.26	99
20+22+25+71	1.36	1.50	1.70	4.84	9.40 (3.4 - 11.6)	1.85 (0.64 - 3.21)	8.12	99
20+22+35+35	1.68	1.85	2.94	2.94	9.40 (3.4 - 11.6)	1.94 (0.64 - 3.34)	8.52	99
20+22+35+42	1.58	1.74	2.76	3.32	9.40 (3.4 - 11.6)	1.92 (0.64 - 3.27)	8.43	99
20+22+35+50	1.48	1.63	2.59	3.70	9.40 (3.4 - 11.6)	1.91 (0.64 - 3.25)	8.39	99
20+22+35+60	1.37	1.51	2.40	4.12	9.40 (3.4 - 11.6)	1.87 (0.64 - 3.21)	8.21	99
20+22+42+42	1.49	1.64	3.13	3.13	9.40 (3.4 - 11.6)	1.90 (0.64 - 3.21)	8.34	99
20+22+42+50	1.40	1.54	2.95	3.51	9.40 (3.4 - 11.6)	1.88 (0.64 - 3.18)	8.26	99
20+22+42+60	1.31	1.44	2.74	3.92	9.40 (3.4 - 11.6)	1.85 (0.64 - 3.16)	8.12	99
20+22+50+50	1.32	1.46	3.31	3.31	9.40 (3.4 - 11.6)	1.87 (0.64 - 3.17)	8.21	99
20+25+25+25	1.98	2.47	2.47	2.47	9.40 (3.4 - 11.6)	1.98 (0.64 - 3.40)	8.70	99
20+25+25+35	1.79	2.24	2.24	3.13	9.40 (3.4 - 11.6)	1.95 (0.64 - 3.37)	8.56	99
20+25+25+42	1.68	2.10	2.10	3.53	9.40 (3.4 - 11.6)	1.92 (0.64 - 3.30)	8.43	99
20+25+25+50	1.57	1.96	1.96	3.92	9.40 (3.4 - 11.6)	1.91 (0.64 - 3.28)	8.39	99
20+25+25+60	1.45	1.81	1.81	4.34	9.40 (3.4 - 11.6)	1.88 (0.64 - 3.24)	8.26	99
20+25+25+71	1.33	1.67	1.67	4.73	9.40 (3.4 - 11.6)	1.85 (0.64 - 3.20)	8.12	99
20+25+35+35	1.63	2.04	2.86	2.86	9.40 (3.4 - 11.6)	1.94 (0.64 - 3.33)	8.52	99
20+25+35+42	1.54	1.93	2.70	3.24	9.40 (3.4 - 11.6)	1.92 (0.64 - 3.26)	8.43	99
20+25+35+50	1.45	1.81	2.53	3.62	9.40 (3.4 - 11.6)	1.91 (0.64 - 3.24)	8.39	99
20+25+35+60	1.34	1.68	2.35	4.03	9.40 (3.4 - 11.6)	1.87 (0.64 - 3.20)	8.21	99
20+25+42+42	1.46	1.82	3.06	3.06	9.40 (3.4 - 11.6)	1.90 (0.64 - 3.19)	8.34	99
20+25+42+50	1.37	1.72	2.88	3.43	9.40 (3.4 - 11.6)	1.88 (0.64 - 3.17)	8.26	99
20+25+50+50	1.30	1.62	3.24	3.24	9.40 (3.4 - 11.6)	1.87 (0.64 - 3.17)	8.21	99
20+35+35+35	1.50	2.63	2.63	2.63	9.40 (3.4 - 11.6)	1.94 (0.64 - 3.29)	8.52	99
20+35+35+42	1.42	2.49	2.49	2.99	9.40 (3.4 - 11.6)	1.91 (0.64 - 3.22)	8.39	99

MXZ-4C80VA HEATING

Indoor units combination	Heating capacity (kW)					Outdoor unit power consumption(kW)	Current (A)	Power factor(%)
	Unit A	Unit B	Unit C	Unit D	Total			
20+35+35+50	1.34	2.35	2.35	3.36	9.40 (3.4 - 11.6)	1.90 (0.64 - 3.20)	8.34	99
20+35+42+42	1.35	2.37	2.84	2.84	9.40 (3.4 - 11.6)	1.89 (0.64 - 3.15)	8.30	99
22+22+22+22	2.35	2.35	2.35	2.35	9.40 (3.4 - 11.6)	2.01 (0.59 - 3.42)	8.83	99
22+22+22+25	2.27	2.27	2.27	2.58	9.40 (3.4 - 11.6)	2.00 (0.59 - 3.41)	8.78	99
22+22+22+35	2.05	2.05	2.05	3.26	9.40 (3.4 - 11.6)	1.95 (0.59 - 3.39)	8.56	99
22+22+22+42	1.91	1.91	1.91	3.66	9.40 (3.4 - 11.6)	1.93 (0.59 - 3.32)	8.48	99
22+22+22+50	1.78	1.78	1.78	4.05	9.40 (3.4 - 11.6)	1.91 (0.59 - 3.30)	8.39	99
22+22+22+60	1.64	1.64	1.64	4.48	9.40 (3.4 - 11.6)	1.88 (0.59 - 3.26)	8.26	99
22+22+22+71	1.51	1.51	1.51	4.87	9.40 (3.4 - 11.6)	1.85 (0.59 - 3.21)	8.12	99
22+22+25+25	2.20	2.20	2.50	2.50	9.40 (3.4 - 11.6)	1.98 (0.59 - 3.41)	8.70	99
22+22+25+35	1.99	1.99	2.26	3.16	9.40 (3.4 - 11.6)	1.95 (0.59 - 3.37)	8.56	99
22+22+25+42	1.86	1.86	2.12	3.56	9.40 (3.4 - 11.6)	1.92 (0.59 - 3.31)	8.43	99
22+22+25+50	1.74	1.74	1.97	3.95	9.40 (3.4 - 11.6)	1.91 (0.59 - 3.28)	8.39	99
22+22+25+60	1.60	1.60	1.82	4.37	9.40 (3.4 - 11.6)	1.88 (0.59 - 3.24)	8.26	99
22+22+25+71	1.48	1.48	1.68	4.77	9.40 (3.4 - 11.6)	1.85 (0.59 - 3.20)	8.12	99
22+22+35+35	1.81	1.81	2.89	2.89	9.40 (3.4 - 11.6)	1.94 (0.59 - 3.33)	8.52	99
22+22+35+42	1.71	1.71	2.72	3.26	9.40 (3.4 - 11.6)	1.92 (0.59 - 3.27)	8.43	99
22+22+35+50	1.60	1.60	2.55	3.64	9.40 (3.4 - 11.6)	1.91 (0.59 - 3.24)	8.39	99
22+22+35+60	1.49	1.49	2.37	4.06	9.40 (3.4 - 11.6)	1.87 (0.59 - 3.20)	8.21	99
22+22+42+42	1.62	1.62	3.08	3.08	9.40 (3.4 - 11.6)	1.90 (0.59 - 3.20)	8.34	99
22+22+42+50	1.52	1.52	2.90	3.46	9.40 (3.4 - 11.6)	1.88 (0.59 - 3.18)	8.26	99
22+22+50+50	1.44	1.44	3.26	3.26	9.40 (3.4 - 11.6)	1.87 (0.59 - 3.17)	8.21	99
22+25+25+25	2.13	2.42	2.42	2.42	9.40 (3.4 - 11.6)	1.97 (0.59 - 3.40)	8.65	99
22+25+25+35	1.93	2.20	2.20	3.07	9.40 (3.4 - 11.6)	1.95 (0.59 - 3.36)	8.56	99
22+25+25+42	1.81	2.06	2.06	3.46	9.40 (3.4 - 11.6)	1.92 (0.59 - 3.29)	8.43	99
22+25+25+50	1.70	1.93	1.93	3.85	9.40 (3.4 - 11.6)	1.91 (0.59 - 3.27)	8.39	99
22+25+25+60	1.57	1.78	1.78	4.27	9.40 (3.4 - 11.6)	1.87 (0.59 - 3.23)	8.21	99
22+25+35+35	1.77	2.01	2.81	2.81	9.40 (3.4 - 11.6)	1.94 (0.59 - 3.32)	8.52	99
22+25+35+42	1.67	1.90	2.65	3.18	9.40 (3.4 - 11.6)	1.92 (0.59 - 3.25)	8.43	99
22+25+35+50	1.57	1.78	2.49	3.56	9.40 (3.4 - 11.6)	1.90 (0.59 - 3.23)	8.34	99
22+25+35+60	1.46	1.65	2.32	3.97	9.40 (3.4 - 11.6)	1.87 (0.59 - 3.20)	8.21	99
22+35+35+35	1.63	2.59	2.59	2.59	9.40 (3.4 - 11.6)	1.94 (0.59 - 3.28)	8.52	99
22+35+35+42	1.54	2.46	2.46	2.95	9.40 (3.4 - 11.6)	1.91 (0.59 - 3.21)	8.39	99
22+35+35+50	1.46	2.32	2.32	3.31	9.40 (3.4 - 11.6)	1.90 (0.59 - 3.20)	8.34	99
22+35+42+42	1.47	2.33	2.80	2.80	9.40 (3.4 - 11.6)	1.89 (0.59 - 3.15)	8.30	99
25+25+25+25	2.35	2.35	2.35	2.35	9.40 (3.4 - 11.6)	1.95 (0.59 - 3.39)	8.56	99
25+25+25+35	2.14	2.14	2.14	2.99	9.40 (3.4 - 11.6)	1.95 (0.59 - 3.35)	8.56	99
25+25+25+42	2.01	2.01	2.01	3.37	9.40 (3.4 - 11.6)	1.92 (0.59 - 3.28)	8.43	99
25+25+25+50	1.88	1.88	1.88	3.76	9.40 (3.4 - 11.6)	1.91 (0.59 - 3.26)	8.39	99
25+25+25+60	1.74	1.74	1.74	4.18	9.40 (3.4 - 11.6)	1.87 (0.59 - 3.22)	8.21	99

MXZ-4C80VA HEATING

Indoor units combination	Heating capacity (kW)					Outdoor unit power consumption(kW)	Current (A)	Power factor(%)
	Unit A	Unit B	Unit C	Unit D	Total			
25+25+35+35	1.96	1.96	2.74	2.74	9.40 (3.4 - 11.6)	1.94 (0.59 - 3.31)	8.52	99
25+25+35+42	1.85	1.85	2.59	3.11	9.40 (3.4 - 11.6)	1.92 (0.59 - 3.24)	8.43	99
25+25+35+50	1.74	1.74	2.44	3.48	9.40 (3.4 - 11.6)	1.90 (0.59 - 3.22)	8.34	99
25+35+35+35	1.81	2.53	2.53	2.53	9.40 (3.4 - 11.6)	1.94 (0.59 - 3.27)	8.52	99
25+35+35+42	1.72	2.40	2.40	2.88	9.40 (3.4 - 11.6)	1.91 (0.59 - 3.20)	8.39	99
35+35+35+35	2.35	2.35	2.35	2.35	9.40 (3.4 - 11.6)	1.93 (0.59 - 3.23)	8.48	99

MITSUBISHI ELECTRIC
Changes for the Better
LIVING ENVIRONMENT SYSTEMS

MITSUBISHI ELECTRIC EUROPE B.V.
LIVING ENVIRONMENT SYSTEMS
GOTHAER STR. 8
D-40880 RATINGEN
www.mitsubishi-les.de

Technische Änderungen vorbehalten
Ref.: „*Außengerät MXZ-4C80VA*-E1“ /
doku275 1. Version
Printed in Germany 11/2010
Quelle: OBH584