MITSUBISHI ELECTRIC
Changes for the Better
LIVING ENVIRONMENT SYSTEMS

M Serie

Außengerät MXZ-4C71VA-E1

FKW Vorgefüllt R410A

Planungsunterlagen

Inverter-Außengeräte in Wärmepumpengeräteausführung zum Anschluss von bis zu vier invertergeregelten Innengeräten aus der M-Serie (Multi-Split-System MXZ: Kühlen oder Heizen)

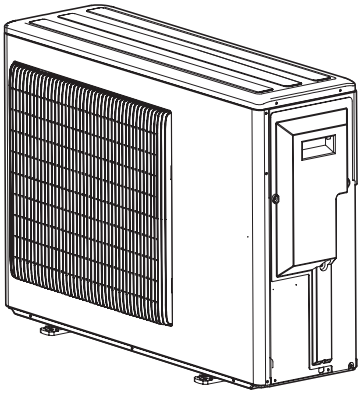

MXZ-4C71VA-E1

Inhalt

Multi-Split-System MXZ-4C71VA 2
Technische Daten 3
Dimensionierung der Kältemittelleitungen 4
Kältekreislaufdiagramm 5
Schaltungsdiagramm 6
Schalldruckpegel 7
Abmessungen 8
Elektrischer Anschluss 9
Zubehör: Luftauslassführung 10
Anhang: Kombinationen und Leistungen 11

Multi-Split-System MXZ-4C71VA

MXZ-4C71VA

- bis zu 4 Innengeräte
- max. 8,8 kW Kälteleistung
- max. 10,7 kW Heizleistung

Kombinationsbeispiel: System MXZ-4B71VA

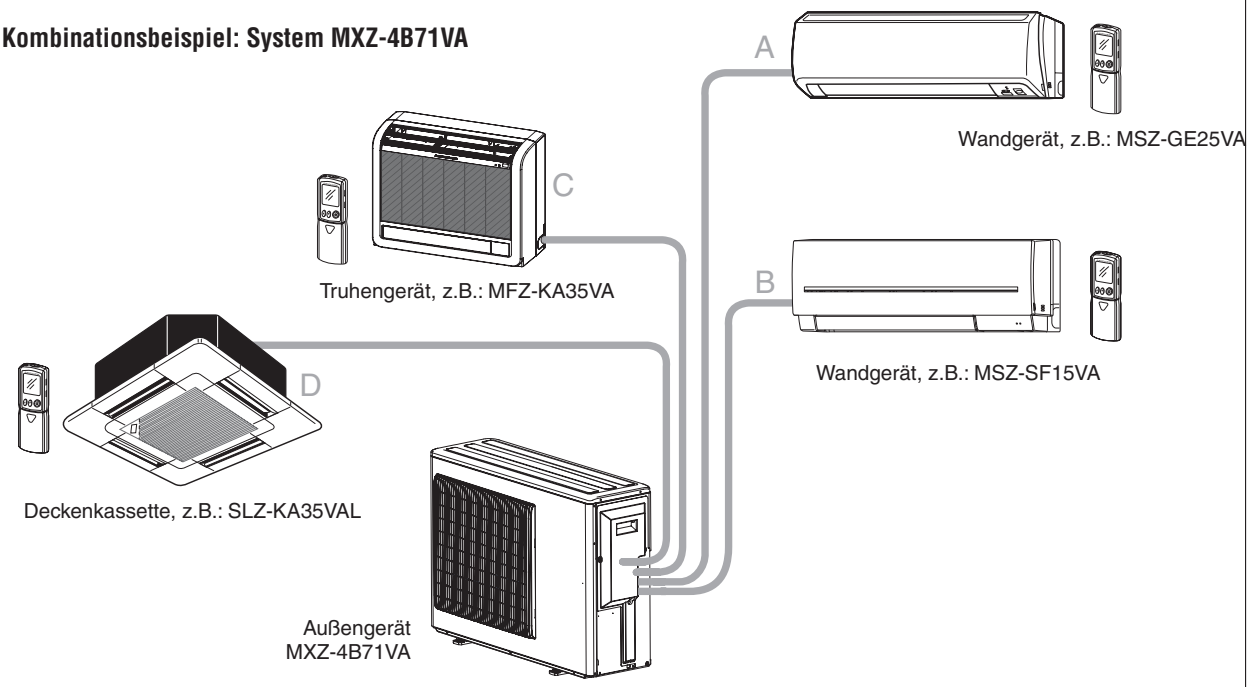

Die Abbildung zeigt eine mögliche Kombination, weitere umfangreiche Kombinationsmöglichkeiten finden Sie im Anhang ab Seite 11.

Typen- und Leistungsübersicht

Multi-Split-System	Anschließbare Innengeräte	Geeignete Innengeräte	Kühlleistung [kW]	Heizleistung [kW]
MXZ-4C71VA	mind. 2; max. 4	15/20/22/25/35/50/60	7,1 (3,7 – 8,8)	8,6 (3,4 – 10,7)

- Das Multi-Split-System MXZ-4C71VA arbeitet entweder im Kühl- oder Heizbetrieb.
- Es müssen mindestens **zwei** Innengeräte angeschlossen werden.

Geeignete Innengeräte für das Multi-Split-System MXZ-4C71VA

Innengeräte-Bauart	Modellreihe	15	20	22	25	35	42	50	60	71
Wandgeräte	MSZ-FD				●	●		●		
	MSZ-GE			●	●	●	●	●	●	
	MSZ-SF	●	●							
Truhengeräte	MFZ-KA				●	●		●		
Kanaleinbaugeräte	SEZ-KD				●	●		●	●	
Deckenkassetten	MLZ-KA				●	●		●		
	SLZ-KA				●	●		●		

Bitte beachten Sie:
Sie können für die Multi-Split-Systeme MXZ nur die Innengeräte für Inverterregelung verwenden. Weil die Spannungsversorgung der Innengeräte über die Außengeräte erfolgt und die Steuerung der Systeme geändert wurde (***New A-Control***), können die Non-Inverter-Innengeräte nicht mit den Inverter-Geräten kombiniert werden.

Technische Daten

Außengerät			MXZ-4C71VA
Kühlleistung ($Q_{0, min}$ – $Q_{0, max.}$)		kW	7,1 (3,7–8,8)
Heizleistung ($Q_{H, min}$ – $Q_{H, max.}$)		kW	8,6 (3,4–10,7)
Spannungsversorgung			~/N, 230 V, 50 Hz
Empfohlene Sicherungsgröße		A	25
Schutzart			IP24
Anzahl Innengeräte pro Außengerät			mind. 2, max. 4
Stromaufnahme ①	Kühlen	A	7,38
	Heizen	A	7,49
Leistungsaufnahme ①	Kühlen	kW	1,680
	Heizen	kW	1,705
Anlaufstrom ①	Kühlen	A	7,49
	Heizen	A	7,49
Leistungszahl COP (Coefficient of Performance)		K / H	4,23 / 5,04
Lüfterstufen / Drehzahl	Kühlen	min^{-1}	1 / 650
	Heizen	min^{-1}	1 / 660
Luftvolumenstrom	Kühlen	m^3/h	2526
	Heizen	m^3/h	2580
Schalldruckpegel	Kühlen	dB (A)	48
	Heizen	dB (A)	52
Abmessungen	Breite	mm	840
	Höhe	mm	710
	Tiefe	mm	330
Gewicht		kg	58
Kältetechnische Anschlüsse	fl.	mm	4 × Ø6,0
	gasf.	mm	1 × Ø12,0 + 3 × Ø10,0
max. Leitungslänge pro Anschluss		m	25
max. Gesamtleitungslänge		m	60
max. Höhendifferenz		m	IG über AG: 15 / IG unter AG: 10
Kältemittelmenge R410A ①		kg	2,7
Kältemittelöl NEO22		cm³	700

① Gemessen bei Nennfrequenz

② Nur für Außengerät

Messbedienungen nach ISO 5151, Leitungslänge (ein Weg): 5 m.

Kühlen:	Innen	27 °CTK / 19 °CFK
	Außen	35 °CTK / 24 °CFK
Heizen:	Innen	20 °CTK
	Außen	7 °CTK / 6 °CFK

Dimensionierung der Kältemittelleitungen

Leitungslänge, Höhendifferenz und Anzahl der Bögen

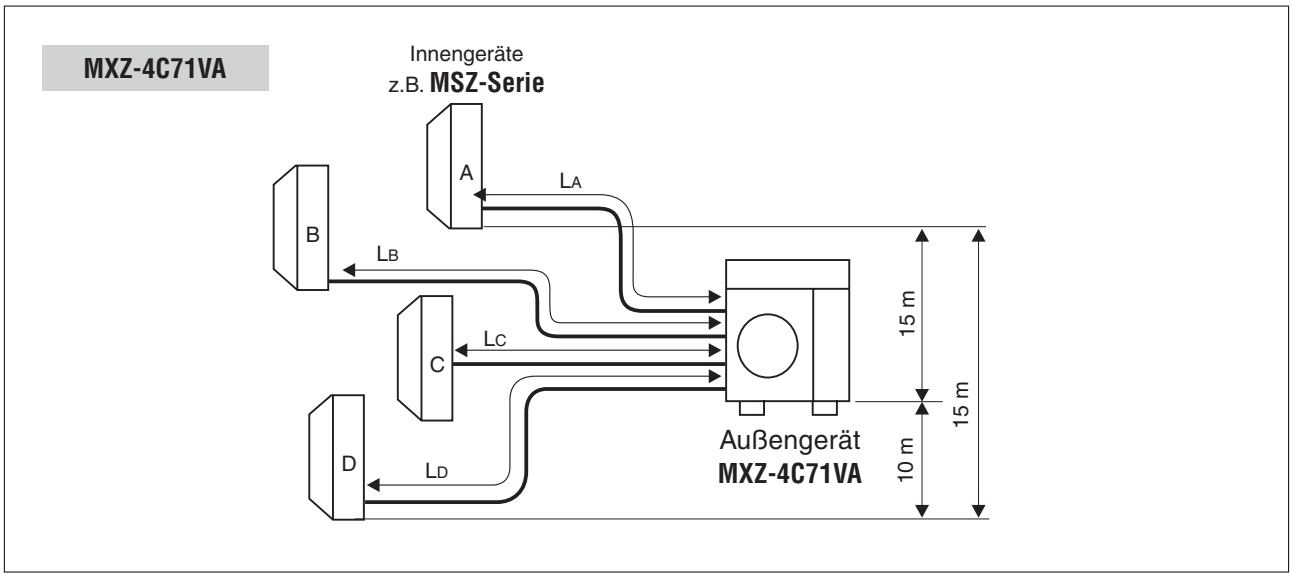

Daten / Modelle	Maximale Gesamtleitungslänge $L_A + L_B + L_C + L_D$ [m]	Maximale Einzelleitungslänge L_A, L_B, L_C, L_D [m]	Maximale Anzahl der Bögen	
			im System	pro Gerät
Geräte A, B, C und D	60	25	60	25

Durchmesser der Anschlüsse und Leitungen

Innengerät		am Gerät	Leitungen
Modell	Anschluss für	mm	mm
22/25/35	Flüssigkeit	Ø6,0	Ø6,0
	Gas	Ø10,0	Ø10,0
50	Flüssigkeit	Ø6,0	Ø6,0
	Gas	Ø12,0	Ø12,0
60	Flüssigkeit	Ø6,0	Ø6,0
	Gas	Ø16,0	Ø16,0

Außengerät		Anschluss
	Anschluss für	mm
Innengerät A	Flüssigkeit	Ø6,0
	Gas	Ø12,0
Innengerät B	Flüssigkeit	Ø6,0
	Gas	Ø10,0
Innengerät C	Flüssigkeit	Ø6,0
	Gas	Ø10,0
Innengerät D	Flüssigkeit	Ø6,0
	Gas	Ø10,0

Kältemittelfüllung und Zusatzfüllung

Die Außengeräte sind mit Kältemittel R410A vorgefüllt und ermöglichen somit Leitungslängen bis zu 40 m ohne Zusatzfüllung. Bei Leitungslängen über 40 m muss zusätzliches Kältemittel nachgefüllt werden.

Modelle	Vorfüllung des Außengerätes	Länge der Kältemittelleitungen (ein Weg, 4 Geräte) ΣL Zusatzfüllung X ①		
		ΣL = 40 m	ΣL = 50 m	ΣL = 60 m
MXZ-4C71VA	2700 g	0 g	200 g	400 g

① Berechnungsformeln: $\Sigma L = L_A + L_B + L_C + L_D$; X [g] = 20 [g/m] x (L - 40) [m]

Kältekreislaufdiagramm

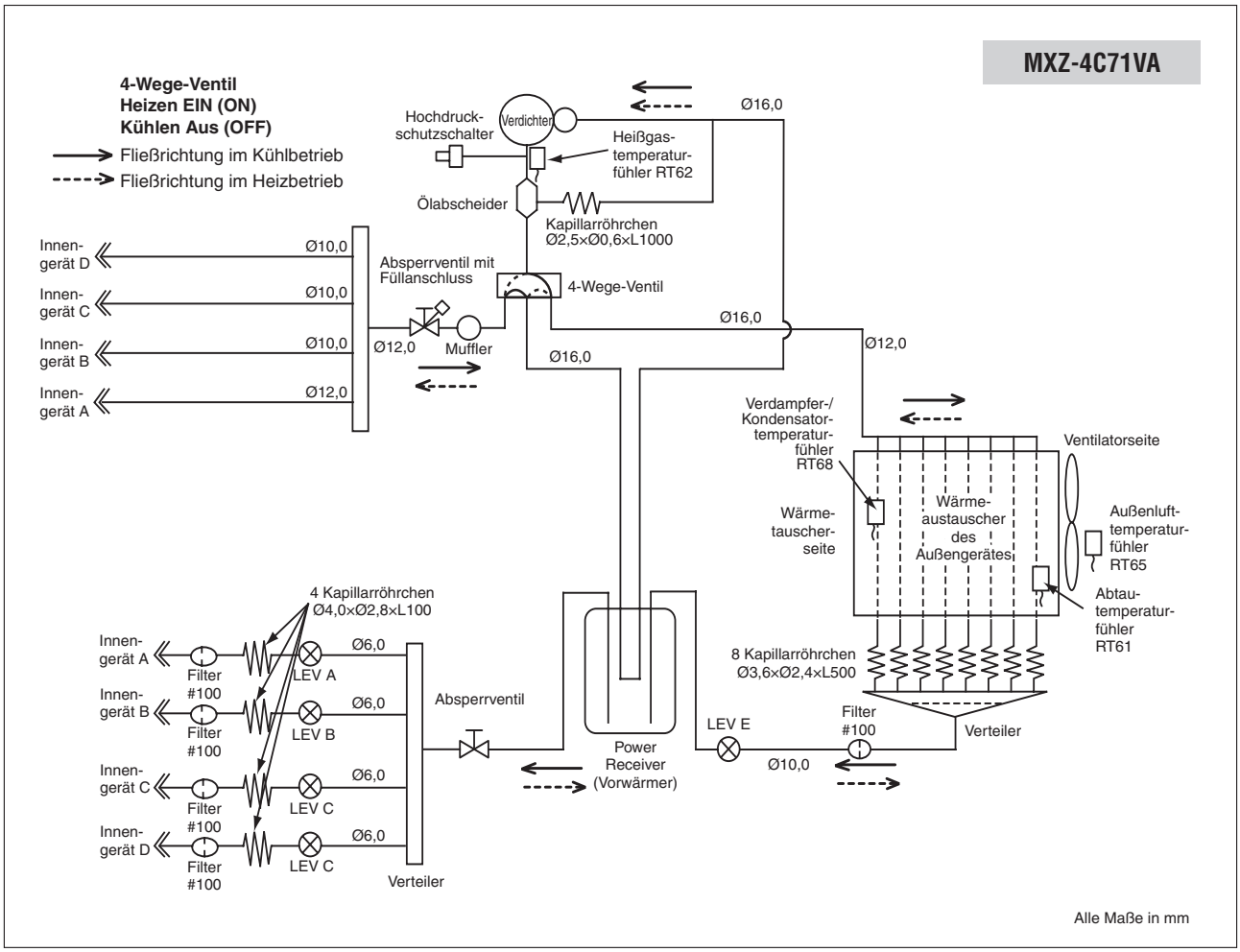

Schaltungsdiagramm

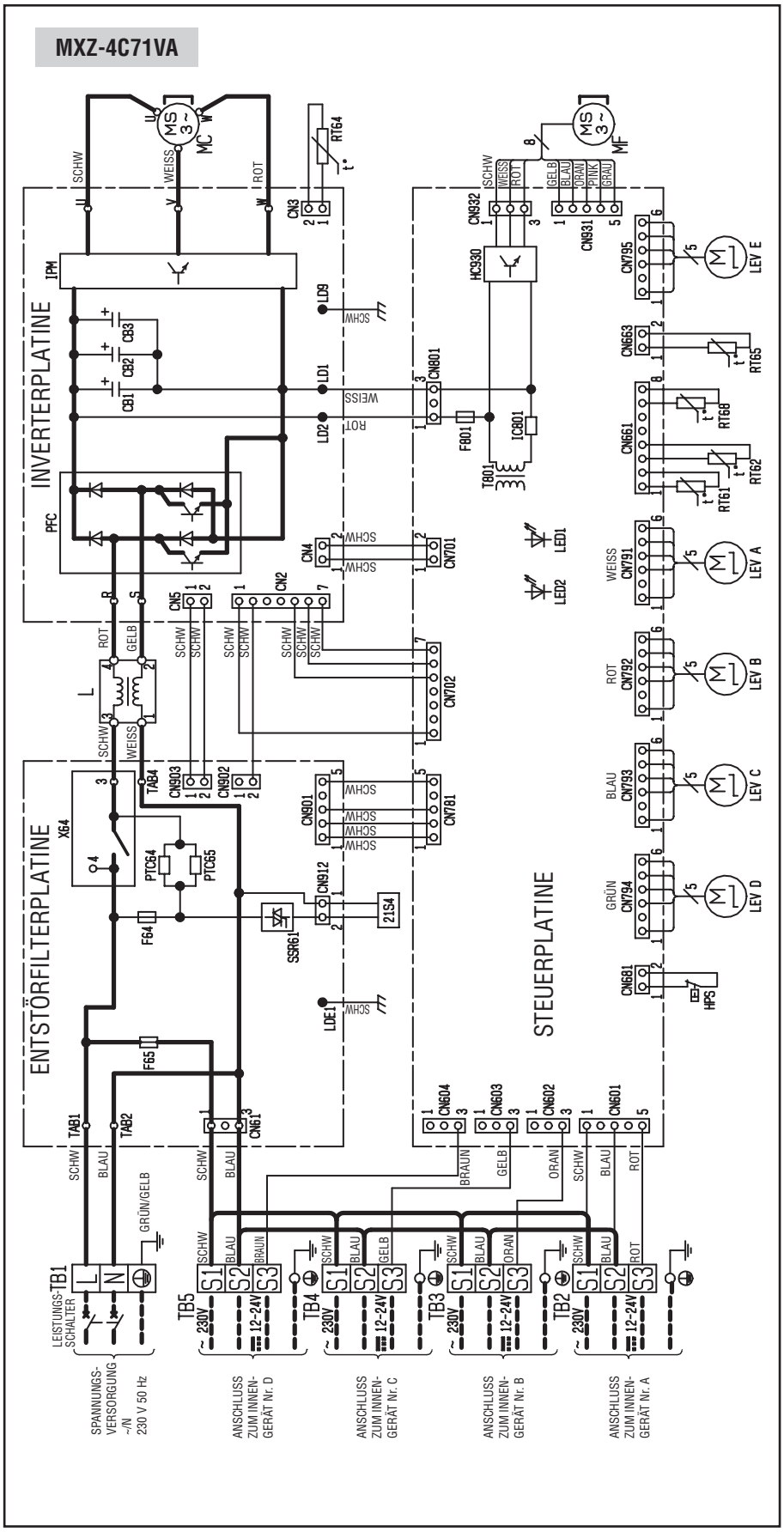

Symbol	Bedeutung
CB1–3	Ladekondensator
F64	Sicherung (2 A, 250 A)
F65	Sicherung (6,3 A, 250 A)
F801	Sicherung (3,15 A, 250 V)
HC930	Halbleiter-Schaltkreis
IC801	Leistungsschaltkreis
IPM	Inverter-Modul
L	Drosselspule
LED1, 2	Betriebs- und Störanzeige-LED

Symbol	Bedeutung
LEV A–D	Expansionsventile (A-D)
LEV E	Expansionsventil
MC	Verdichtermotor
MF	Lüftermotor
PFC	Leistungsregelmodul
PTC64, 65	Schaltkreisschutz
RT61	Abtau-Temperaturfühler
RT62	Heißgas-Temperaturfühler
RT64	Inverter-Kühlblocktemperaturfühler

Symbol	Bedeutung
RT65	Außentemperaturfühler
RT68	Wärmetauscher-Temperaturfühler
SSR61	Halbleiterrelais
T801	Transformator
TB1–5	Klemmenleisten
X64	Relais
21S4	4-Wege-Ventil
HPS	Hochdruckschutzschalter

Schalldruckpegel

MXZ-4C71VA

Lüfterstufe	Betriebsart	Schalldruck [dB(A)]	Linie
Hoch	Kühlen	48	●——●
	Heizen	52	○- - -○

Testbedingungen
Kühlen: Trockenkugeltemperatur 35 °C Feuchtkugeltemperatur 24 °C
Heizen: Trockenkugeltemperatur 7 °C Feuchtkugeltemperatur 6 °C

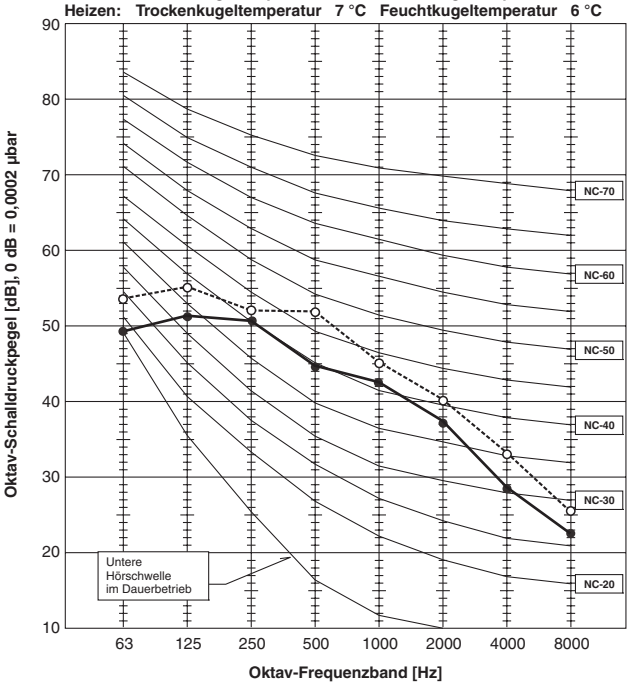

Messbedingungen

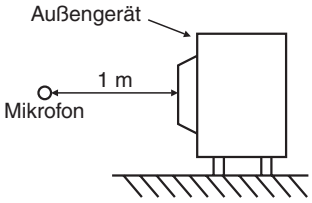

Abmessungen

MXZ-4C71VA

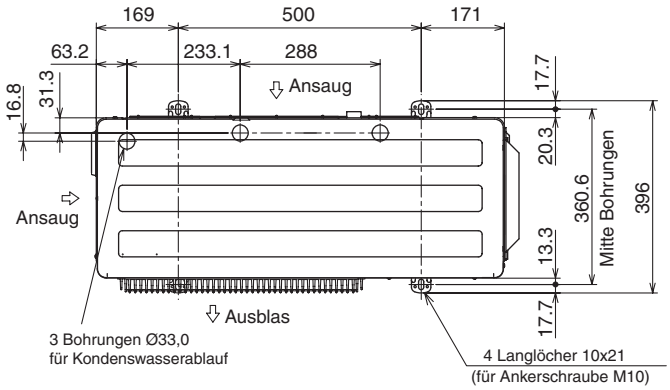

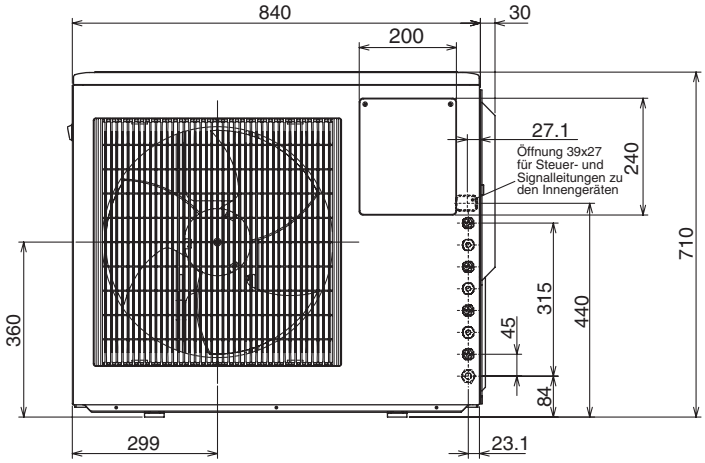

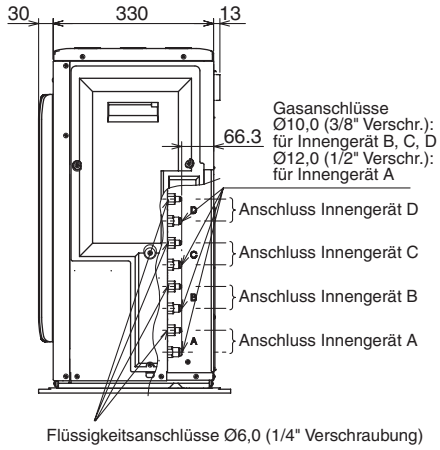

1. Raumbedarf für die Installlation

Die Front und beide Seiten müssen frei bleiben.

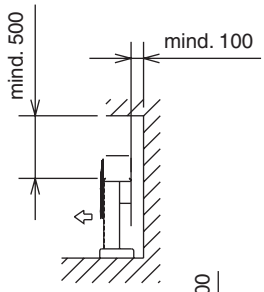

Die Front und nach oben muss frei bleiben.

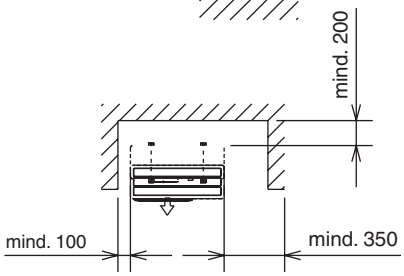

Die Front, nach oben und beide Seiten müssen frei bleiben.

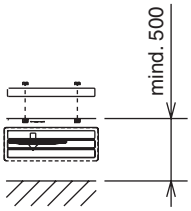

2. Raumbedarf für die Wartung

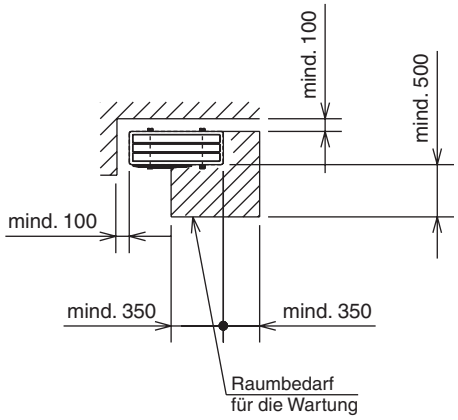

Alle Maße in mm.

Elektrischer Anschluss

MXZ-4C71VA + 4 Innengeräte

Innengerät MSZ, MFZ, SLZ, SEZ

Innengerät A, B, C oder D
(Es ist nur ein Gerät dargestellt.)

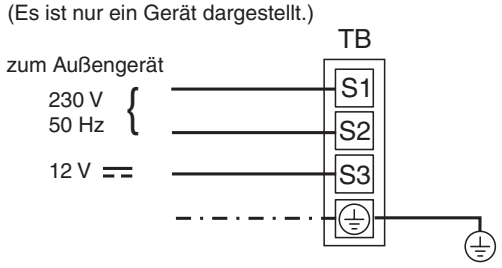

- Die Spannungsversorgung der Innengeräte **MSZ, MFZ, SLZ, SEZ** erfolgt durch das Außengerät **MXZ.**
- Versorgungsspannung und Steuersignale werden über die 3 Kabel an S1, S2 und S3 übertragen.

Außengerät MXZ für 4 Innengeräte

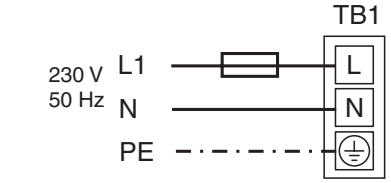

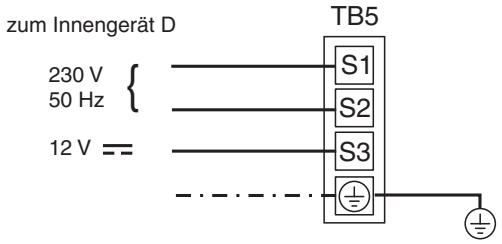

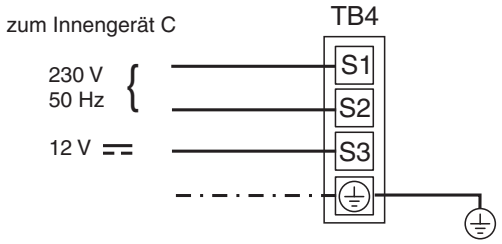

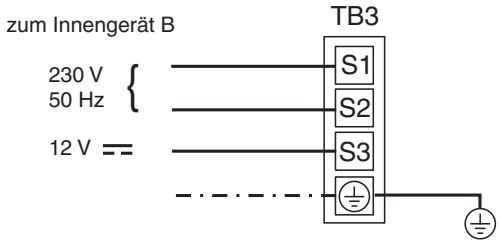

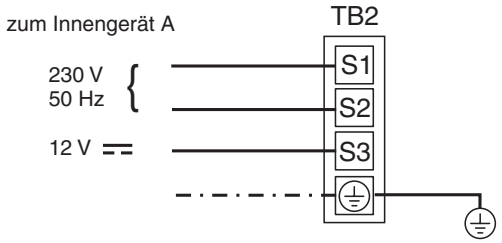

- Es müssen mindestens 2 Innengeräte angeschlossen werden.
  – Innengerät A an TB2
  – Innengerät B an TB3

Zubehör: Luftauslassführung

Die Luftauslassführung wird direkt auf das Luftauslassgitter des Außengerätes montiert und lenkt den austretenden Luftstrom durch die verstellbaren Lamellen in eine bestimmte Richtung ab. So wird z.B. die Belästigung von Personen durch den Abluftstrom vermieden, wenn das Außengerät über einer Eingangstür oder in Einkaufspassagen installiert wird.

Beachten Sie, dass der Luftstrom in eine Richtung abgeleitet wird, in der er keinen Schaden anrichten und keine Personen belästigen kann.

Außengerät	Luftauslassführung
MXZ-4C71VA	MAC-856SG

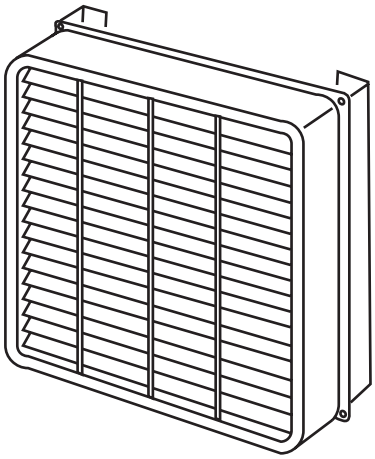

Montagebeispiel

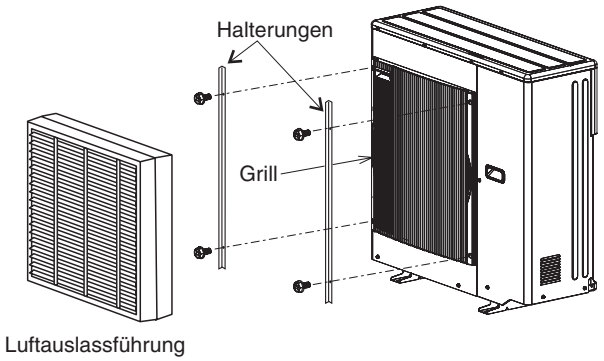

Abmessungen

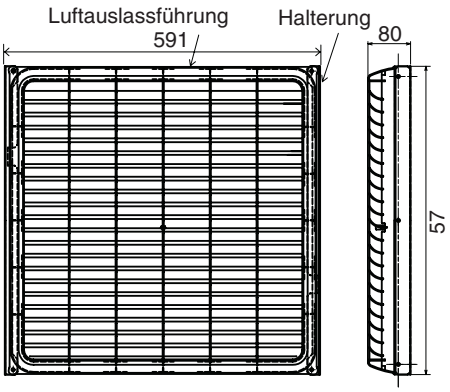

Alle Maße in mm

Weiteres Zubehör

Das Zubehör wird laufend erweitert, fragen Sie Ihren Mitsubishi Electric Service-Partner nach den neuesten Angeboten.

Anhang: Kombinationen und Leistungen

In diesem Abschnitt finden Sie sämtliche Kombinationsmöglichkeiten zwischen dem Außengerät und den Innengeräten für das Multi-Split-System MXZ-4C71VA. Dazu finden Sie in den Tabellen die kältetechnischen Leistungen der Kombinationen im Betrieb unter Nennbedingungen.

Bitte beachten Sie folgendes:

- Andere Kombinationen, als in den Tabellen aufgeführt, sind nicht möglich.
- Die Modellziffer im Gerätenamen bezeichnet die Nennkälteleistung in kW × 0,1:
  MSZ-GE**22**VA mit der Modellziffer **22** bietet **2,2 kW** Kälteleistung,
  MSZ-GE**50**VA mit der Modellziffer **50** bietet **5,0 kW** Kälteleistung, usw.
  In den ausführlichen Kombinationstabellen sind der leichteren Lesbarkeit die Modellziffern als Platzhalter für ein Innengerät mit der entsprechenden Leistung aufgeführt.
  22+22+50 bedeutet: zwei Innengeräte 22 (2,2 kW) und ein Innengerät 50 (5,0 kW)

Anhang: Kombinationen und Leistungen

Kühlbetrieb **12**
Heizbetrieb **20**

MXZ-4C71VA COOLING

Indoor units combination	Cooling capacity (kW)					Outdoor unit power consumption(kW)	Current (A)	Power factor(%)
	Unit A	Unit B	Unit C	Unit D	Total			
15	1.50				1.50 (1.4 - 3.0)	0.490 (0.450 - 1.020)	2.15	99
20	2.00				2.00 (1.4 - 3.0)	0.520 (0.450 - 1.020)	2.28	99
22	2.20				2.20 (1.4 - 3.0)	0.510 (0.420 - 0.740)	2.24	99
25	2.50				2.50 (1.4 - 3.3)	0.580 (0.420 - 0.830)	2.55	99
35	3.50				3.50 (1.5 - 4.3)	0.800 (0.430 - 1.180)	3.51	99
42	4.20				4.20 (1.6 - 5.0)	1.060 (0.450 - 1.420)	4.66	99
50	5.00				5.00 (1.6 - 5.6)	1.400 (0.480 - 1.660)	6.15	99
60	6.00				6.00 (1.6 - 6.6)	1.700 (0.480 - 2.250)	7.47	99
15+15	1.50	1.50			3.00 (2.0 - 5.4)	0.790 (0.700 - 1.800)	3.47	99
15+20	1.50	2.00			3.50 (2.0 - 5.4)	0.850 (0.700 - 1.790)	3.73	99
15+22	1.50	2.20			3.70 (2.0 - 5.4)	0.980 (0.620 - 1.620)	4.30	99
15+25	1.50	2.50			4.00 (2.0 - 5.4)	1.130 (0.780 - 1.970)	4.96	99
15+35	1.50	3.50			5.00 (2.0 - 6.0)	1.110 (0.620 - 1.920)	4.87	99
15+42	1.50	4.20			5.70 (2.0 - 6.4)	1.370 (0.620 - 2.130)	6.02	99
15+50	1.50	5.00			6.50 (2.0 - 6.8)	1.670 (0.630 - 2.350)	7.33	99
15+60	1.36	5.44			6.80 (2.0 - 7.1)	1.850 (0.640 - 2.490)	8.12	99
20+20	2.00	2.00			4.00 (2.0 - 5.4)	1.100 (0.700 - 1.800)	4.83	99
20+22	2.00	2.20			4.20 (2.0 - 5.4)	1.030 (0.620 - 1.620)	4.52	99
20+25	2.00	2.50			4.50 (2.0 - 5.4)	0.960 (0.620 - 1.620)	4.22	99
20+35	2.00	3.50			5.50 (2.0 - 6.3)	1.300 (0.620 - 2.070)	5.71	99
20+42	2.00	4.20			6.20 (2.0 - 6.7)	1.550 (0.620 - 2.270)	6.81	99
20+50	1.94	4.86			6.80 (2.0 - 7.1)	1.850 (0.630 - 2.500)	8.12	99
20+60	1.70	5.10			6.80 (2.0 - 7.1)	1.850 (0.640 - 2.490)	8.12	99
22+22	2.20	2.20			4.40 (2.0 - 5.4)	0.900 (0.540 - 1.450)	3.95	99
22+25	2.20	2.50			4.70 (2.0 - 5.7)	0.990 (0.540 - 1.600)	4.35	99
22+35	2.20	3.50			5.70 (2.0 - 6.4)	1.340 (0.540 - 1.960)	5.88	99
22+42	2.20	4.20			6.40 (2.0 - 6.8)	1.600 (0.540 - 2.160)	7.03	99
22+50	2.08	4.72			6.80 (2.0 - 7.1)	1.820 (0.550 - 2.330)	7.99	99
22+60	1.82	4.98			6.80 (2.0 - 7.1)	1.820 (0.560 - 2.320)	7.99	99
25+25	2.50	2.50			5.00 (2.0 - 6.0)	1.080 (0.540 - 1.750)	4.74	99
25+35	2.50	3.50			6.00 (2.0 - 6.6)	1.450 (0.540 - 2.050)	6.37	99
25+42	2.50	4.20			6.70 (2.0 - 6.9)	1.710 (0.540 - 2.250)	7.51	99
25+50	2.27	4.53			6.80 (2.0 - 7.1)	1.820 (0.550 - 2.330)	7.99	99
25+60	2.00	4.80			6.80 (2.0 - 7.1)	1.810 (0.560 - 2.320)	7.95	99
35+35	3.40	3.40			6.80 (2.0 - 7.1)	1.820 (0.540 - 2.340)	7.99	99
35+42	3.09	3.71			6.80 (2.0 - 7.1)	1.820 (0.540 - 2.340)	7.99	99
35+50	2.80	4.00			6.80 (2.0 - 7.1)	1.810 (0.550 - 2.330)	7.95	99
35+60	2.51	4.29			6.80 (2.0 - 7.1)	1.750 (0.560 - 2.330)	7.69	99
42+42	3.40	3.40			6.80 (2.0 - 7.1)	1.820 (0.540 - 2.340)	7.99	99
42+50	3.10	3.70			6.80 (2.0 - 7.1)	1.770 (0.550 - 2.340)	7.77	99

MXZ-4C71VA COOLING

Indoor units combination	Cooling capacity (kW)					Outdoor unit power consumption(kW)	Current (A)	Power factor(%)
	Unit A	Unit B	Unit C	Unit D	Total			
42+60	2.80	4.00			6.80 (2.1 - 7.1)	1.710 (0.560 - 2.350)	7.51	99
50+50	3.40	3.40			6.80 (2.1 - 7.1)	1.720 (0.560 - 2.360)	7.55	99
50+60	3.09	3.71			6.80 (2.1 - 7.1)	1.650 (0.570 - 2.360)	7.25	99
60+60	3.40	3.40			6.80 (2.1 - 7.1)	1.580 (0.580 - 2.410)	6.94	99
15+15+15	1.50	1.50	1.50		4.50 (2.9 - 7.3)	0.970 (0.780 - 2.310)	4.26	99
15+15+20	1.50	1.50	2.00		5.00 (2.9 - 7.3)	1.270 (0.760 - 2.430)	5.58	99
15+15+22	1.50	1.50	2.20		5.20 (2.9 - 7.3)	1.310 (0.730 - 2.390)	5.75	99
15+15+25	1.50	1.50	2.50		5.50 (2.9 - 7.4)	1.420 (0.730 - 2.400)	6.24	99
15+15+35	1.50	1.50	3.50		6.50 (2.9 - 8.0)	1.620 (0.730 - 2.460)	7.11	99
15+15+42	1.48	1.48	4.14		7.10 (2.9 - 8.4)	1.950 (0.730 - 2.540)	8.56	99
15+15+50	1.33	1.33	4.44		7.10 (2.9 - 8.5)	1.910 (0.730 - 2.560)	8.39	99
15+15+60	1.18	1.18	4.73		7.10 (2.9 - 8.5)	1.810 (0.730 - 2.540)	7.95	99
15+20+20	1.50	2.00	2.00		5.50 (2.9 - 7.4)	1.460 (0.760 - 2.440)	6.41	99
15+20+22	1.50	2.00	2.20		5.70 (2.9 - 7.4)	1.490 (0.730 - 2.400)	6.54	99
15+20+25	1.50	2.00	2.50		6.00 (2.9 - 7.4)	1.600 (0.840 - 2.400)	7.03	99
15+20+35	1.50	2.00	3.50		7.00 (2.9 - 8.3)	1.900 (0.730 - 2.530)	8.34	99
15+20+42	1.38	1.84	3.87		7.10 (2.9 - 8.5)	1.940 (0.730 - 2.570)	8.52	99
15+20+50	1.25	1.67	4.18		7.10 (2.9 - 8.5)	1.870 (0.730 - 2.550)	8.21	99
15+20+60	1.12	1.49	4.48		7.10 (2.9 - 8.5)	1.780 (0.730 - 2.530)	7.82	99
15+22+22	1.50	2.20	2.20		5.90 (2.9 - 7.4)	1.520 (0.700 - 2.360)	6.68	99
15+22+25	1.50	2.20	2.50		6.20 (2.9 - 7.6)	1.570 (0.700 - 2.380)	6.90	99
15+22+35	1.48	2.17	3.45		7.10 (2.9 - 8.4)	1.930 (0.700 - 2.510)	8.48	99
15+22+42	1.35	1.98	3.77		7.10 (2.9 - 8.5)	1.880 (0.700 - 2.530)	8.26	99
15+22+50	1.22	1.80	4.08		7.10 (2.9 - 8.5)	1.820 (0.700 - 2.510)	7.99	99
15+22+60	1.10	1.61	4.39		7.10 (2.9 - 8.5)	1.720 (0.700 - 2.490)	7.55	99
15+25+25	1.50	2.50	2.50		6.50 (2.9 - 8.0)	1.580 (0.700 - 2.420)	6.94	99
15+25+35	1.42	2.37	3.31		7.10 (2.9 - 8.5)	1.930 (0.700 - 2.540)	8.48	99
15+25+42	1.30	2.16	3.64		7.10 (2.9 - 8.5)	1.860 (0.700 - 2.520)	8.17	99
15+25+50	1.18	1.97	3.94		7.10 (2.9 - 8.5)	1.800 (0.700 - 2.510)	7.91	99
15+25+60	1.07	1.78	4.26		7.10 (2.9 - 8.5)	1.700 (0.700 - 2.490)	7.47	99
15+35+35	1.25	2.92	2.92		7.10 (2.9 - 8.5)	1.860 (0.700 - 2.530)	8.17	99
15+35+42	1.16	2.70	3.24		7.10 (2.9 - 8.5)	1.800 (0.700 - 2.510)	7.91	99
15+35+50	1.07	2.49	3.55		7.10 (2.9 - 8.5)	1.730 (0.700 - 2.500)	7.60	99
15+35+60	0.97	2.26	3.87		7.10 (2.9 - 8.5)	1.670 (0.700 - 2.480)	7.33	99
15+42+42	1.08	3.01	3.01		7.10 (2.9 - 8.5)	1.730 (0.700 - 2.500)	7.60	99
15+42+50	1.00	2.79	3.32		7.10 (2.9 - 8.5)	1.680 (0.700 - 2.480)	7.38	99
15+42+60	0.91	2.55	3.64		7.10 (2.9 - 8.5)	1.650 (0.700 - 2.470)	7.25	99
15+50+50	0.93	3.09	3.09		7.10 (2.9 - 8.5)	1.670 (0.700 - 2.470)	7.33	99
15+50+60	0.85	2.84	3.41		7.10 (2.9 - 8.5)	1.640 (0.700 - 2.460)	7.20	99
20+20+20	2.00	2.00	2.00		6.00 (2.9 - 7.4)	1.520 (0.780 - 2.320)	6.68	99

MXZ-4C71VA COOLING

Indoor units combination	Cooling capacity (kW)					Outdoor unit power consumption(kW)	Current (A)	Power factor(%)
	Unit A	Unit B	Unit C	Unit D	Total			
20+20+22	2.00	2.00	2.20		6.20 (2.9 - 7.6)	1.610 (0.730 - 2.420)	7.07	99
20+20+25	2.00	2.00	2.50		6.50 (2.9 - 8.0)	1.620 (0.730 - 2.460)	7.11	99
20+20+35	1.89	1.89	3.31		7.10 (2.9 - 8.5)	1.970 (0.730 - 2.580)	8.65	99
20+20+42	1.73	1.73	3.64		7.10 (2.9 - 8.5)	1.900 (0.730 - 2.560)	8.34	99
20+20+50	1.58	1.58	3.94		7.10 (2.9 - 8.5)	1.840 (0.730 - 2.550)	8.08	99
20+20+60	1.42	1.42	4.26		7.10 (2.9 - 8.5)	1.740 (0.730 - 2.530)	7.64	99
20+22+22	2.00	2.20	2.20		6.40 (2.9 - 7.9)	1.570 (0.700 - 2.410)	6.90	99
20+22+25	2.00	2.20	2.50		6.70 (2.9 - 8.1)	1.650 (0.700 - 2.430)	7.25	99
20+22+35	1.84	2.03	3.23		7.10 (2.9 - 8.5)	1.920 (0.700 - 2.540)	8.43	99
20+22+42	1.69	1.86	3.55		7.10 (2.9 - 8.5)	1.850 (0.700 - 2.520)	8.12	99
20+22+50	1.54	1.70	3.86		7.10 (2.9 - 8.5)	1.790 (0.700 - 2.500)	7.86	99
20+22+60	1.39	1.53	4.18		7.10 (2.9 - 8.5)	1.690 (0.700 - 2.480)	7.42	99
20+25+25	2.00	2.50	2.50		7.00 (2.9 - 8.3)	1.860 (0.700 - 2.490)	8.17	99
20+25+35	1.78	2.22	3.11		7.10 (2.9 - 8.5)	1.900 (0.700 - 2.540)	8.34	99
20+25+42	1.63	2.04	3.43		7.10 (2.9 - 8.5)	1.830 (0.700 - 2.520)	8.04	99
20+25+50	1.49	1.87	3.74		7.10 (2.9 - 8.5)	1.770 (0.700 - 2.500)	7.77	99
20+25+60	1.35	1.69	4.06		7.10 (2.9 - 8.5)	1.670 (0.700 - 2.480)	7.33	99
20+35+35	1.58	2.76	2.76		7.10 (2.9 - 8.5)	1.830 (0.700 - 2.530)	8.04	99
20+35+42	1.46	2.56	3.07		7.10 (2.9 - 8.5)	1.760 (0.700 - 2.510)	7.73	99
20+35+50	1.35	2.37	3.38		7.10 (2.9 - 8.5)	1.700 (0.700 - 2.490)	7.47	99
20+35+60	1.23	2.16	3.70		7.10 (2.9 - 8.5)	1.670 (0.700 - 2.480)	7.33	99
20+42+42	1.37	2.87	2.87		7.10 (2.9 - 8.5)	1.700 (0.700 - 2.490)	7.47	99
20+42+50	1.27	2.66	3.17		7.10 (2.9 - 8.5)	1.680 (0.700 - 2.480)	7.38	99
20+42+60	1.16	2.44	3.49		7.10 (2.9 - 8.5)	1.650 (0.700 - 2.470)	7.25	99
20+50+50	1.18	2.96	2.96		7.10 (2.9 - 8.5)	1.670 (0.700 - 2.470)	7.33	99
22+22+22	2.20	2.20	2.20		6.60 (2.9 - 8.1)	1.540 (0.670 - 2.390)	6.76	99
22+22+25	2.20	2.20	2.50		6.90 (2.9 - 8.2)	1.750 (0.670 - 2.420)	7.69	99
22+22+35	1.98	1.98	3.15		7.10 (2.9 - 8.5)	1.860 (0.670 - 2.500)	8.17	99
22+22+42	1.82	1.82	3.47		7.10 (2.9 - 8.5)	1.800 (0.670 - 2.480)	7.91	99
22+22+50	1.66	1.66	3.78		7.10 (2.9 - 8.5)	1.730 (0.670 - 2.460)	7.60	99
22+22+60	1.50	1.50	4.10		7.10 (2.9 - 8.5)	1.640 (0.670 - 2.440)	7.20	99
22+25+25	2.17	2.47	2.47		7.10 (2.9 - 8.4)	1.890 (0.670 - 2.470)	8.30	99
22+25+35	1.90	2.16	3.03		7.10 (2.9 - 8.5)	1.840 (0.670 - 2.490)	8.08	99
22+25+42	1.76	1.99	3.35		7.10 (2.9 - 8.5)	1.780 (0.670 - 2.480)	7.82	99
22+25+50	1.61	1.83	3.66		7.10 (2.9 - 8.5)	1.710 (0.670 - 2.460)	7.51	99
22+25+60	1.46	1.66	3.98		7.10 (2.9 - 8.5)	1.630 (0.670 - 2.440)	7.16	99
22+35+35	1.70	2.70	2.70		7.10 (2.9 - 8.5)	1.780 (0.670 - 2.480)	7.82	99
22+35+42	1.58	2.51	3.01		7.10 (2.9 - 8.5)	1.710 (0.670 - 2.470)	7.51	99
22+35+50	1.46	2.32	3.32		7.10 (2.9 - 8.5)	1.660 (0.670 - 2.450)	7.29	99
22+35+60	1.34	2.12	3.64		7.10 (2.9 - 8.5)	1.630 (0.670 - 2.440)	7.16	99

MXZ-4C71VA COOLING

Indoor units combination	Cooling capacity (kW)					Outdoor unit power consumption(kW)	Current (A)	Power factor(%)
	Unit A	Unit B	Unit C	Unit D	Total			
22+42+42	1.47	2.81	2.81		7.10 (2.9 - 8.5)	1.650 (0.670 - 2.450)	7.25	99
22+42+50	1.37	2.62	3.11		7.10 (2.9 - 8.5)	1.640 (0.670 - 2.440)	7.20	99
22+42+60	1.26	2.40	3.44		7.10 (2.9 - 8.5)	1.610 (0.670 - 2.430)	7.07	99
22+50+50	1.28	2.91	2.91		7.10 (2.9 - 8.5)	1.630 (0.670 - 2.430)	7.16	99
25+25+25	2.37	2.37	2.37		7.10 (2.9 - 8.5)	1.890 (0.670 - 2.500)	8.30	99
25+25+35	2.09	2.09	2.92		7.10 (2.9 - 8.5)	1.820 (0.670 - 2.490)	7.99	99
25+25+42	1.93	1.93	3.24		7.10 (2.9 - 8.5)	1.760 (0.670 - 2.470)	7.73	99
25+25+50	1.78	1.78	3.55		7.10 (2.9 - 8.5)	1.690 (0.670 - 2.460)	7.42	99
25+25+60	1.61	1.61	3.87		7.10 (2.9 - 8.5)	1.630 (0.670 - 2.440)	7.16	99
25+35+35	1.87	2.62	2.62		7.10 (2.9 - 8.5)	1.760 (0.670 - 2.480)	7.73	99
25+35+42	1.74	2.44	2.92		7.10 (2.9 - 8.5)	1.690 (0.670 - 2.460)	7.42	99
25+35+50	1.61	2.26	3.23		7.10 (2.9 - 8.5)	1.660 (0.670 - 2.450)	7.29	99
25+35+60	1.48	2.07	3.55		7.10 (2.9 - 8.5)	1.630 (0.670 - 2.440)	7.16	99
25+42+42	1.63	2.74	2.74		7.10 (2.9 - 8.5)	1.650 (0.670 - 2.450)	7.25	99
25+42+50	1.52	2.55	3.03		7.10 (2.9 - 8.5)	1.640 (0.670 - 2.440)	7.20	99
25+50+50	1.42	2.84	2.84		7.10 (2.9 - 8.5)	1.630 (0.670 - 2.430)	7.16	99
35+35+35	2.37	2.37	2.37		7.10 (2.9 - 8.5)	1.690 (0.670 - 2.470)	7.42	99
35+35+42	2.22	2.22	2.66		7.10 (2.9 - 8.5)	1.670 (0.670 - 2.460)	7.33	99
35+35+50	2.07	2.07	2.96		7.10 (2.9 - 8.5)	1.660 (0.670 - 2.450)	7.29	99
35+42+42	2.09	2.51	2.51		7.10 (2.9 - 8.5)	1.650 (0.670 - 2.450)	7.25	99
15+15+15+15	1.50	1.50	1.50	1.50	6.00 (3.7 - 7.9)	1.390 (1.000 - 2.370)	6.10	99
15+15+15+20	1.50	1.50	1.50	2.00	6.50 (3.7 - 7.9)	1.660 (0.920 - 2.570)	7.29	99
15+15+15+22	1.50	1.50	1.50	2.20	6.70 (3.7 - 7.9)	1.670 (0.890 - 2.520)	7.33	99
15+15+15+25	1.50	1.50	1.50	2.50	7.00 (3.7 - 8.0)	1.740 (0.890 - 2.530)	7.64	99
15+15+15+35	1.33	1.33	1.33	3.11	7.10 (3.7 - 8.0)	1.960 (1.090 - 2.530)	8.61	99
15+15+15+42	1.22	1.22	1.22	3.43	7.10 (3.7 - 8.7)	1.800 (0.890 - 2.600)	7.91	99
15+15+15+50	1.12	1.12	1.12	3.74	7.10 (3.7 - 8.8)	1.770 (0.890 - 2.610)	7.77	99
15+15+15+60	1.01	1.01	1.01	4.06	7.10 (3.7 - 8.8)	1.740 (0.890 - 2.600)	7.64	99
15+15+20+20	1.50	1.50	2.00	2.00	7.00 (3.7 - 8.0)	1.780 (0.920 - 2.580)	7.82	99
15+15+20+22	1.48	1.48	1.97	2.17	7.10 (3.7 - 8.0)	1.780 (0.890 - 2.530)	7.82	99
15+15+20+25	1.42	1.42	1.89	2.37	7.10 (3.7 - 8.0)	1.850 (0.890 - 2.530)	8.12	99
15+15+20+35	1.25	1.25	1.67	2.92	7.10 (3.7 - 8.5)	1.860 (0.890 - 2.580)	8.17	99
15+15+20+42	1.16	1.16	1.54	3.24	7.10 (3.7 - 8.8)	1.780 (0.890 - 2.620)	7.82	99
15+15+20+50	1.07	1.07	1.42	3.55	7.10 (3.7 - 8.8)	1.770 (0.890 - 2.610)	7.77	99
15+15+20+60	0.97	0.97	1.29	3.87	7.10 (3.7 - 8.8)	1.740 (0.890 - 2.600)	7.64	99
15+15+22+22	1.44	1.44	2.11	2.11	7.10 (3.7 - 8.0)	1.790 (0.860 - 2.480)	7.86	99
15+15+22+25	1.38	1.38	2.03	2.31	7.10 (3.7 - 8.0)	1.850 (0.860 - 2.480)	8.12	99
15+15+22+35	1.22	1.22	1.80	2.86	7.10 (3.7 - 8.7)	1.780 (0.860 - 2.560)	7.82	99
15+15+22+42	1.13	1.13	1.66	3.17	7.10 (3.7 - 8.8)	1.740 (0.860 - 2.570)	7.64	99
15+15+22+50	1.04	1.04	1.53	3.48	7.10 (3.7 - 8.8)	1.730 (0.860 - 2.560)	7.60	99

MXZ-4C71VA COOLING

Indoor units combination	Cooling capacity (kW)					Outdoor unit power consumption(kW)	Current (A)	Power factor(%)
	Unit A	Unit B	Unit C	Unit D	Total			
15+15+22+60	0.95	0.95	1.39	3.80	7.10 (3.7 - 8.8)	1.700 (0.860 - 2.550)	7.47	99
15+15+25+25	1.33	1.33	2.22	2.22	7.10 (3.7 - 8.0)	1.920 (1.060 - 2.480)	8.43	99
15+15+25+35	1.18	1.18	1.97	2.76	7.10 (3.7 - 8.8)	1.760 (0.860 - 2.580)	7.73	99
15+15+25+42	1.10	1.10	1.83	3.07	7.10 (3.7 - 8.8)	1.740 (0.860 - 2.570)	7.64	99
15+15+25+50	1.01	1.01	1.69	3.38	7.10 (3.7 - 8.8)	1.730 (0.860 - 2.560)	7.60	99
15+15+25+60	0.93	0.93	1.54	3.70	7.10 (3.7 - 8.8)	1.700 (0.860 - 2.550)	7.47	99
15+15+35+35	1.07	1.07	2.49	2.49	7.10 (3.7 - 8.8)	1.760 (0.860 - 2.580)	7.73	99
15+15+35+42	1.00	1.00	2.32	2.79	7.10 (3.7 - 8.8)	1.740 (0.860 - 2.570)	7.64	99
15+15+35+50	0.93	0.93	2.16	3.09	7.10 (3.7 - 8.8)	1.730 (0.860 - 2.560)	7.60	99
15+15+35+60	0.85	0.85	1.99	3.41	7.10 (3.7 - 8.8)	1.700 (0.860 - 2.550)	7.47	99
15+15+42+42	0.93	0.93	2.62	2.62	7.10 (3.7 - 8.8)	1.720 (0.860 - 2.560)	7.55	99
15+15+42+50	0.87	0.87	2.44	2.91	7.10 (3.7 - 8.8)	1.710 (0.860 - 2.550)	7.51	99
15+20+20+20	1.42	1.89	1.89	1.89	7.10 (3.7 - 8.0)	1.890 (0.920 - 2.580)	8.30	99
15+20+20+22	1.38	1.84	1.84	2.03	7.10 (3.7 - 8.0)	1.890 (0.890 - 2.530)	8.30	99
15+20+20+25	1.33	1.78	1.78	2.22	7.10 (3.7 - 8.0)	1.960 (1.090 - 2.530)	8.61	99
15+20+20+35	1.18	1.58	1.58	2.76	7.10 (3.7 - 8.8)	1.800 (0.890 - 2.630)	7.91	99
15+20+20+42	1.10	1.46	1.46	3.07	7.10 (3.7 - 8.8)	1.780 (0.890 - 2.620)	7.82	99
15+20+20+50	1.01	1.35	1.35	3.38	7.10 (3.7 - 8.8)	1.770 (0.890 - 2.610)	7.77	99
15+20+20+60	0.93	1.23	1.23	3.70	7.10 (3.7 - 8.8)	1.740 (0.890 - 2.600)	7.64	99
15+20+22+22	1.35	1.80	1.98	1.98	7.10 (3.7 - 8.0)	1.900 (0.860 - 2.480)	8.34	99
15+20+22+25	1.30	1.73	1.90	2.16	7.10 (3.7 - 8.2)	1.880 (0.860 - 2.500)	8.26	99
15+20+22+35	1.16	1.54	1.70	2.70	7.10 (3.7 - 8.8)	1.760 (0.860 - 2.580)	7.73	99
15+20+22+42	1.08	1.43	1.58	3.01	7.10 (3.7 - 8.8)	1.740 (0.860 - 2.570)	7.64	99
15+20+22+50	1.00	1.33	1.46	3.32	7.10 (3.7 - 8.8)	1.730 (0.860 - 2.560)	7.60	99
15+20+22+60	0.91	1.21	1.34	3.64	7.10 (3.7 - 8.8)	1.700 (0.860 - 2.550)	7.47	99
15+20+25+25	1.25	1.67	2.09	2.09	7.10 (3.7 - 8.5)	1.820 (0.860 - 2.530)	7.99	99
15+20+25+35	1.12	1.49	1.87	2.62	7.10 (3.7 - 8.8)	1.760 (0.860 - 2.580)	7.73	99
15+20+25+42	1.04	1.39	1.74	2.92	7.10 (3.7 - 8.8)	1.740 (0.860 - 2.570)	7.64	99
15+20+25+50	0.97	1.29	1.61	3.23	7.10 (3.7 - 8.8)	1.730 (0.860 - 2.560)	7.60	99
15+20+25+60	0.89	1.18	1.48	3.55	7.10 (3.7 - 8.8)	1.700 (0.860 - 2.550)	7.47	99
15+20+35+35	1.01	1.35	2.37	2.37	7.10 (3.7 - 8.8)	1.760 (0.860 - 2.580)	7.73	99
15+20+35+42	0.95	1.27	2.22	2.66	7.10 (3.7 - 8.8)	1.740 (0.860 - 2.570)	7.64	99
15+20+35+50	0.89	1.18	2.07	2.96	7.10 (3.7 - 8.8)	1.730 (0.860 - 2.560)	7.60	99
15+20+42+42	0.89	1.19	2.51	2.51	7.10 (3.7 - 8.8)	1.720 (0.860 - 2.560)	7.55	99
15+22+22+22	1.31	1.93	1.93	1.93	7.10 (3.7 - 8.1)	1.860 (0.830 - 2.430)	8.17	99
15+22+22+25	1.27	1.86	1.86	2.11	7.10 (3.7 - 8.4)	1.800 (0.830 - 2.470)	7.91	99
15+22+22+35	1.13	1.66	1.66	2.64	7.10 (3.7 - 8.8)	1.720 (0.830 - 2.530)	7.55	99
15+22+22+42	1.05	1.55	1.55	2.95	7.10 (3.7 - 8.8)	1.700 (0.830 - 2.520)	7.47	99
15+22+22+50	0.98	1.43	1.43	3.26	7.10 (3.7 - 8.8)	1.690 (0.830 - 2.510)	7.42	99
15+22+22+60	0.89	1.31	1.31	3.58	7.10 (3.7 - 8.8)	1.660 (0.830 - 2.500)	7.29	99

MXZ-4C71VA COOLING

Indoor units combination	Cooling capacity (kW)					Outdoor unit power consumption(kW)	Current (A)	Power factor(%)
	Unit A	Unit B	Unit C	Unit D	Total			
15+22+25+25	1.22	1.80	2.04	2.04	7.10 (3.7 - 8.7)	1.740 (0.830 - 2.510)	7.64	99
15+22+25+35	1.10	1.61	1.83	2.56	7.10 (3.7 - 8.8)	1.720 (0.830 - 2.530)	7.55	99
15+22+25+42	1.02	1.50	1.71	2.87	7.10 (3.7 - 8.8)	1.700 (0.830 - 2.520)	7.47	99
15+22+25+50	0.95	1.39	1.58	3.17	7.10 (3.7 - 8.8)	1.690 (0.830 - 2.510)	7.42	99
15+22+25+60	0.87	1.28	1.45	3.49	7.10 (3.7 - 8.8)	1.660 (0.830 - 2.500)	7.29	99
15+22+35+35	1.00	1.46	2.32	2.32	7.10 (3.7 - 8.8)	1.720 (0.830 - 2.530)	7.55	99
15+22+35+42	0.93	1.37	2.18	2.62	7.10 (3.7 - 8.8)	1.700 (0.830 - 2.520)	7.47	99
15+22+35+50	0.87	1.28	2.04	2.91	7.10 (3.7 - 8.8)	1.690 (0.830 - 2.510)	7.42	99
15+22+42+42	0.88	1.29	2.46	2.46	7.10 (3.7 - 8.8)	1.680 (0.830 - 2.510)	7.38	99
15+25+25+25	1.18	1.97	1.97	1.97	7.10 (3.7 - 8.8)	1.720 (0.830 - 2.530)	7.55	99
15+25+25+35	1.07	1.78	1.78	2.49	7.10 (3.7 - 8.8)	1.720 (0.830 - 2.530)	7.55	99
15+25+25+42	1.00	1.66	1.66	2.79	7.10 (3.7 - 8.8)	1.700 (0.830 - 2.520)	7.47	99
15+25+25+50	0.93	1.54	1.54	3.09	7.10 (3.7 - 8.8)	1.690 (0.830 - 2.510)	7.42	99
15+25+25+60	0.85	1.42	1.42	3.41	7.10 (3.7 - 8.8)	1.660 (0.830 - 2.500)	7.29	99
15+25+35+35	0.97	1.61	2.26	2.26	7.10 (3.7 - 8.8)	1.720 (0.830 - 2.530)	7.55	99
15+25+35+42	0.91	1.52	2.12	2.55	7.10 (3.7 - 8.8)	1.700 (0.830 - 2.520)	7.47	99
15+25+35+50	0.85	1.42	1.99	2.84	7.10 (3.7 - 8.8)	1.690 (0.830 - 2.510)	7.42	99
15+25+42+42	0.86	1.43	2.40	2.40	7.10 (3.7 - 8.8)	1.680 (0.830 - 2.510)	7.38	99
15+35+35+35	0.89	2.07	2.07	2.07	7.10 (3.7 - 8.8)	1.720 (0.830 - 2.530)	7.55	99
20+20+20+20	1.78	1.78	1.78	1.78	7.10 (3.7 - 8.0)	1.840 (1.000 - 2.380)	8.08	99
20+20+20+22	1.73	1.73	1.73	1.90	7.10 (3.7 - 8.2)	1.920 (0.890 - 2.550)	8.43	99
20+20+20+25	1.67	1.67	1.67	2.09	7.10 (3.7 - 8.5)	1.860 (0.890 - 2.580)	8.17	99
20+20+20+35	1.49	1.49	1.49	2.62	7.10 (3.7 - 8.8)	1.800 (0.890 - 2.630)	7.91	99
20+20+20+42	1.39	1.39	1.39	2.92	7.10 (3.7 - 8.8)	1.780 (0.890 - 2.620)	7.82	99
20+20+20+50	1.29	1.29	1.29	3.23	7.10 (3.7 - 8.8)	1.770 (0.890 - 2.610)	7.77	99
20+20+20+60	1.18	1.18	1.18	3.55	7.10 (3.7 - 8.8)	1.740 (0.890 - 2.600)	7.64	99
20+20+22+22	1.69	1.69	1.86	1.86	7.10 (3.7 - 8.4)	1.840 (0.860 - 2.520)	8.08	99
20+20+22+25	1.63	1.63	1.80	2.04	7.10 (3.7 - 8.7)	1.780 (0.860 - 2.560)	7.82	99
20+20+22+35	1.46	1.46	1.61	2.56	7.10 (3.7 - 8.8)	1.760 (0.860 - 2.580)	7.73	99
20+20+22+42	1.37	1.37	1.50	2.87	7.10 (3.7 - 8.8)	1.740 (0.860 - 2.570)	7.64	99
20+20+22+50	1.27	1.27	1.39	3.17	7.10 (3.7 - 8.8)	1.730 (0.860 - 2.560)	7.60	99
20+20+22+60	1.16	1.16	1.28	3.49	7.10 (3.7 - 8.8)	1.700 (0.860 - 2.550)	7.47	99
20+20+25+25	1.58	1.58	1.97	1.97	7.10 (3.7 - 8.8)	1.760 (0.860 - 2.580)	7.73	99
20+20+25+35	1.42	1.42	1.78	2.49	7.10 (3.7 - 8.8)	1.760 (0.860 - 2.580)	7.73	99
20+20+25+42	1.33	1.33	1.66	2.79	7.10 (3.7 - 8.8)	1.740 (0.860 - 2.570)	7.64	99
20+20+25+50	1.23	1.23	1.54	3.09	7.10 (3.7 - 8.8)	1.730 (0.860 - 2.560)	7.60	99
20+20+25+60	1.14	1.14	1.42	3.41	7.10 (3.7 - 8.8)	1.700 (0.860 - 2.550)	7.47	99
20+20+35+35	1.29	1.29	2.26	2.26	7.10 (3.7 - 8.8)	1.760 (0.860 - 2.580)	7.73	99
20+20+35+42	1.21	1.21	2.12	2.55	7.10 (3.7 - 8.8)	1.740 (0.860 - 2.570)	7.64	99
20+20+35+50	1.14	1.14	1.99	2.84	7.10 (3.7 - 8.8)	1.730 (0.860 - 2.560)	7.60	99

MXZ-4C71VA COOLING

Indoor units combination	Cooling capacity (kW)					Outdoor unit power consumption(kW)	Current (A)	Power factor(%)
	Unit A	Unit B	Unit C	Unit D	Total			
20+20+42+42	1.15	1.15	2.40	2.40	7.10 (3.7 - 8.8)	1.720 (0.860 - 2.560)	7.55	99
20+22+22+22	1.65	1.82	1.82	1.82	7.10 (3.7 - 8.6)	1.760 (0.830 - 2.500)	7.73	99
20+22+22+25	1.60	1.76	1.76	1.99	7.10 (3.7 - 8.8)	1.720 (0.830 - 2.530)	7.55	99
20+22+22+35	1.43	1.58	1.58	2.51	7.10 (3.7 - 8.8)	1.720 (0.830 - 2.530)	7.55	99
20+22+22+42	1.34	1.47	1.47	2.81	7.10 (3.7 - 8.8)	1.700 (0.830 - 2.520)	7.47	99
20+22+22+50	1.25	1.37	1.37	3.11	7.10 (3.7 - 8.8)	1.690 (0.830 - 2.510)	7.42	99
20+22+22+60	1.15	1.26	1.26	3.44	7.10 (3.7 - 8.8)	1.660 (0.830 - 2.500)	7.29	99
20+22+25+25	1.54	1.70	1.93	1.93	7.10 (3.7 - 8.8)	1.720 (0.830 - 2.530)	7.55	99
20+22+25+35	1.39	1.53	1.74	2.44	7.10 (3.7 - 8.8)	1.720 (0.830 - 2.530)	7.55	99
20+22+25+42	1.30	1.43	1.63	2.74	7.10 (3.7 - 8.8)	1.700 (0.830 - 2.520)	7.47	99
20+22+25+50	1.21	1.34	1.52	3.03	7.10 (3.7 - 8.8)	1.690 (0.830 - 2.510)	7.42	99
20+22+35+35	1.27	1.39	2.22	2.22	7.10 (3.7 - 8.8)	1.720 (0.830 - 2.530)	7.55	99
20+22+35+42	1.19	1.31	2.09	2.51	7.10 (3.7 - 8.8)	1.700 (0.830 - 2.520)	7.47	99
20+25+25+25	1.49	1.87	1.87	1.87	7.10 (3.7 - 8.8)	1.720 (0.830 - 2.530)	7.55	99
20+25+25+35	1.35	1.69	1.69	2.37	7.10 (3.7 - 8.8)	1.720 (0.830 - 2.530)	7.55	99
20+25+25+42	1.27	1.58	1.58	2.66	7.10 (3.7 - 8.8)	1.700 (0.830 - 2.520)	7.47	99
20+25+25+50	1.18	1.48	1.48	2.96	7.10 (3.7 - 8.8)	1.690 (0.830 - 2.510)	7.42	99
20+25+35+35	1.23	1.54	2.16	2.16	7.10 (3.7 - 8.8)	1.720 (0.830 - 2.530)	7.55	99
20+25+35+42	1.16	1.45	2.04	2.44	7.10 (3.7 - 8.8)	1.700 (0.830 - 2.520)	7.47	99
20+35+35+35	1.14	1.99	1.99	1.99	7.10 (3.7 - 8.8)	1.720 (0.830 - 2.530)	7.55	99
22+22+22+22	1.78	1.78	1.78	1.78	7.10 (3.7 - 8.8)	1.680 (0.800 - 2.480)	7.38	99
22+22+22+25	1.72	1.72	1.72	1.95	7.10 (3.7 - 8.8)	1.680 (0.800 - 2.480)	7.38	99
22+22+22+35	1.55	1.55	1.55	2.46	7.10 (3.7 - 8.8)	1.680 (0.800 - 2.480)	7.38	99
22+22+22+42	1.45	1.45	1.45	2.76	7.10 (3.7 - 8.8)	1.660 (0.800 - 2.470)	7.29	99
22+22+22+50	1.35	1.35	1.35	3.06	7.10 (3.7 - 8.8)	1.650 (0.800 - 2.460)	7.25	99
22+22+25+25	1.66	1.66	1.89	1.89	7.10 (3.7 - 8.8)	1.680 (0.800 - 2.480)	7.38	99
22+22+25+35	1.50	1.50	1.71	2.39	7.10 (3.7 - 8.8)	1.680 (0.800 - 2.480)	7.38	99
22+22+25+42	1.41	1.41	1.60	2.69	7.10 (3.7 - 8.8)	1.660 (0.800 - 2.470)	7.29	99
22+22+25+50	1.31	1.31	1.49	2.98	7.10 (3.7 - 8.8)	1.650 (0.800 - 2.460)	7.25	99
22+22+35+35	1.37	1.37	2.18	2.18	7.10 (3.7 - 8.8)	1.680 (0.800 - 2.480)	7.38	99
22+22+35+42	1.29	1.29	2.05	2.46	7.10 (3.7 - 8.8)	1.660 (0.800 - 2.470)	7.29	99
22+25+25+25	1.61	1.83	1.83	1.83	7.10 (3.7 - 8.8)	1.680 (0.800 - 2.480)	7.38	99
22+25+25+35	1.46	1.66	1.66	2.32	7.10 (3.7 - 8.8)	1.680 (0.800 - 2.480)	7.38	99
22+25+25+42	1.37	1.56	1.56	2.62	7.10 (3.7 - 8.8)	1.660 (0.800 - 2.470)	7.29	99
22+25+25+50	1.28	1.45	1.45	2.91	7.10 (3.7 - 8.8)	1.650 (0.800 - 2.460)	7.25	99
22+25+35+35	1.34	1.52	2.12	2.12	7.10 (3.7 - 8.8)	1.680 (0.800 - 2.480)	7.38	99
22+25+35+42	1.26	1.43	2.00	2.40	7.10 (3.7 - 8.8)	1.660 (0.800 - 2.470)	7.29	99
25+25+25+25	1.78	1.78	1.78	1.78	7.10 (3.7 - 8.8)	1.680 (0.800 - 2.480)	7.38	99
25+25+25+35	1.61	1.61	1.61	2.26	7.10 (3.7 - 8.8)	1.680 (0.800 - 2.480)	7.38	99
25+25+25+42	1.52	1.52	1.52	2.55	7.10 (3.7 - 8.8)	1.660 (0.800 - 2.470)	7.29	99

MXZ-4C71VA COOLING

Indoor units combination	Cooling capacity (kW)					Outdoor unit power consumption(kW)	Current (A)	Power factor(%)
	Unit A	Unit B	Unit C	Unit D	Total			
25+25+25+50	1.42	1.42	1.42	2.84	7.10 (3.7 - 8.8)	1.650 (0.800 - 2.460)	7.25	99
25+25+35+35	1.48	1.48	2.07	2.07	7.10 (3.7 - 8.8)	1.680 (0.800 - 2.480)	7.38	99

MXZ-4C71VA HEATING

Indoor units combination	Heating capacity (kW)					Outdoor unit power consumption(kW)	Current (A)	Power factor(%)
	Unit A	Unit B	Unit C	Unit D	Total			
15	1.70				1.70 (1.2 - 3.0)	0.500 (0.400 - 0.950)	2.20	99
20	2.20				2.20 (1.2 - 3.9)	0.610 (0.390 - 1.330)	2.68	99
22	3.30				3.30 (1.2 - 4.2)	0.760 (0.380 - 1.090)	3.34	99
25	3.60				3.60 (1.2 - 4.5)	0.860 (0.380 - 1.190)	3.78	99
35	4.00				4.00 (1.2 - 4.8)	1.000 (0.380 - 1.300)	4.39	99
42	5.40				5.40 (1.3 - 6.5)	1.460 (0.370 - 1.800)	6.41	99
50	7.20				7.20 (1.4 - 8.2)	1.880 (0.370 - 2.300)	8.26	99
60	7.90				7.90 (1.4 - 8.6)	2.120 (0.360 - 2.410)	9.31	99
15+15	1.70	1.70			3.40 (1.8 - 5.0)	0.850 (0.670 - 1.310)	3.73	99
15+20	1.67	2.23			3.90 (1.8 - 5.8)	1.020 (0.680 - 1.630)	4.48	99
15+22	1.66	2.44			4.10 (1.8 - 6.1)	1.080 (0.550 - 1.760)	4.74	99
15+25	1.65	2.75			4.40 (1.8 - 6.6)	1.180 (0.800 - 1.950)	5.18	99
15+35	2.16	5.04			7.20 (1.8 - 9.0)	1.680 (0.550 - 2.170)	7.38	99
15+42	2.03	5.67			7.70 (1.8 - 9.0)	1.780 (0.550 - 2.170)	7.82	99
15+50	1.92	6.38			8.30 (1.8 - 9.0)	1.910 (0.550 - 2.170)	8.39	99
15+60	1.72	6.88			8.60 (1.8 - 9.0)	2.050 (0.550 - 2.150)	9.00	99
20+20	2.20	2.20			4.40 (1.8 - 6.6)	1.180 (0.660 - 1.950)	5.18	99
20+22	2.62	2.88			5.50 (1.8 - 6.9)	1.330 (0.540 - 1.830)	5.84	99
20+25	2.98	3.72			6.70 (1.8 - 7.5)	1.510 (0.540 - 1.790)	6.63	99
20+35	2.76	4.84			7.60 (1.8 - 9.0)	1.770 (0.540 - 2.170)	7.77	99
20+42	2.58	5.42			8.00 (1.8 - 9.0)	1.870 (0.540 - 2.170)	8.21	99
20+50	2.46	6.14			8.60 (1.8 - 9.0)	2.000 (0.540 - 2.170)	8.78	99
20+60	2.15	6.45			8.60 (1.8 - 9.0)	2.070 (0.540 - 2.130)	9.09	99
22+22	3.30	3.30			6.60 (1.8 - 7.2)	1.470 (0.410 - 1.710)	6.46	99
22+25	3.23	3.67			6.90 (1.8 - 8.1)	1.580 (0.410 - 1.940)	6.94	99
22+35	2.97	4.73			7.70 (1.8 - 9.0)	1.800 (0.410 - 2.170)	7.91	99
22+42	2.82	5.38			8.20 (1.8 - 9.0)	1.910 (0.410 - 2.170)	8.39	99
22+50	2.63	5.97			8.60 (1.8 - 9.0)	2.010 (0.410 - 2.160)	8.83	99
22+60	2.31	6.29			8.60 (1.8 - 9.0)	2.080 (0.410 - 2.120)	9.13	99
25+25	3.60	3.60			7.20 (1.8 - 9.0)	1.680 (0.410 - 2.170)	7.38	99
25+35	3.29	4.61			7.90 (1.8 - 9.0)	1.860 (0.410 - 2.170)	8.17	99
25+42	3.13	5.27			8.40 (1.8 - 9.0)	1.960 (0.410 - 2.170)	8.61	99
25+50	2.87	5.73			8.60 (1.8 - 9.0)	2.020 (0.410 - 2.150)	8.87	99
25+60	2.53	6.07			8.60 (1.8 - 9.0)	2.070 (0.400 - 2.110)	9.09	99
35+35	4.30	4.30			8.60 (1.8 - 9.0)	2.030 (0.410 - 2.170)	8.92	99
35+42	3.91	4.69			8.60 (1.8 - 9.0)	2.040 (0.410 - 2.140)	8.96	99
35+50	3.54	5.06			8.60 (1.8 - 9.0)	2.040 (0.400 - 2.110)	8.96	99
35+60	3.17	5.43			8.60 (1.8 - 9.0)	1.900 (0.370 - 2.060)	8.34	99
42+42	4.30	4.30			8.60 (1.8 - 9.0)	2.050 (0.400 - 2.110)	9.00	99
42+50	3.93	4.67			8.60 (1.8 - 9.0)	1.910 (0.380 - 2.080)	8.39	99

MXZ-4C71VA HEATING

Indoor units combination	Heating capacity (kW)					Outdoor unit power consumption(kW)	Current (A)	Power factor(%)
	Unit A	Unit B	Unit C	Unit D	Total			
42+60	3.54	5.06			8.60 (1.9 - 9.0)	1.780 (0.360 - 2.030)	7.82	99
50+50	4.30	4.30			8.60 (1.9 - 9.0)	1.760 (0.360 - 2.040)	7.73	99
50+60	3.91	4.69			8.60 (1.9 - 9.0)	1.780 (0.360 - 1.970)	7.82	99
60+60	4.30	4.30			8.60 (1.9 - 9.0)	1.800 (0.360 - 1.900)	7.91	99
15+15+15	1.70	1.70	1.70		5.10 (2.6 - 8.4)	1.110 (0.900 - 2.410)	4.87	99
15+15+20	1.68	1.68	2.24		5.60 (2.6 - 8.9)	1.690 (1.060 - 2.950)	7.42	99
15+15+22	1.67	1.67	2.45		5.80 (2.6 - 9.1)	1.610 (0.880 - 2.940)	7.07	99
15+15+25	1.66	1.66	2.77		6.10 (2.6 - 9.4)	1.700 (0.880 - 3.080)	7.47	99
15+15+35	1.92	1.92	4.47		8.30 (2.6 - 10.5)	2.270 (0.880 - 3.320)	9.97	99
15+15+42	1.79	1.79	5.02		8.60 (2.6 - 10.6)	2.330 (0.880 - 3.280)	10.23	99
15+15+50	1.61	1.61	5.38		8.60 (2.6 - 10.6)	2.320 (0.880 - 3.250)	10.19	99
15+15+60	1.43	1.43	5.73		8.60 (2.6 - 10.6)	2.350 (0.880 - 3.250)	10.32	99
15+20+20	1.66	2.22	2.22		6.10 (2.6 - 9.4)	1.830 (1.050 - 3.170)	8.04	99
15+20+22	1.66	2.21	2.43		6.30 (2.6 - 9.6)	1.740 (0.870 - 3.160)	7.64	99
15+20+25	1.65	2.20	2.75		6.60 (2.6 - 9.9)	1.830 (1.260 - 3.290)	8.04	99
15+20+35	1.84	2.46	4.30		8.60 (2.6 - 10.6)	2.340 (0.870 - 3.310)	10.28	99
15+20+42	1.68	2.23	4.69		8.60 (2.6 - 10.6)	2.320 (0.870 - 3.270)	10.19	99
15+20+50	1.52	2.02	5.06		8.60 (2.6 - 10.6)	2.310 (0.870 - 3.240)	10.14	99
15+20+60	1.36	1.81	5.43		8.60 (2.6 - 10.6)	2.340 (0.870 - 3.240)	10.28	99
15+22+22	1.65	2.42	2.42		6.50 (2.6 - 9.8)	1.660 (0.690 - 3.150)	7.29	99
15+22+25	1.77	2.59	2.94		7.30 (2.6 - 10.1)	1.860 (0.690 - 3.200)	8.17	99
15+22+35	1.79	2.63	4.18		8.60 (2.6 - 10.6)	2.200 (0.690 - 3.210)	9.66	99
15+22+42	1.63	2.39	4.57		8.60 (2.6 - 10.6)	2.180 (0.690 - 3.170)	9.57	99
15+22+50	1.48	2.17	4.94		8.60 (2.6 - 10.6)	2.170 (0.690 - 3.140)	9.53	99
15+22+60	1.33	1.95	5.32		8.60 (2.6 - 10.6)	2.200 (0.690 - 3.140)	9.66	99
15+25+25	1.92	3.19	3.19		8.30 (2.6 - 10.5)	2.120 (0.690 - 3.210)	9.31	99
15+25+35	1.72	2.87	4.01		8.60 (2.6 - 10.6)	2.200 (0.690 - 3.210)	9.66	99
15+25+42	1.57	2.62	4.40		8.60 (2.6 - 10.6)	2.180 (0.690 - 3.170)	9.57	99
15+25+50	1.43	2.39	4.78		8.60 (2.6 - 10.6)	2.170 (0.690 - 3.140)	9.53	99
15+25+60	1.29	2.15	5.16		8.60 (2.6 - 10.6)	2.200 (0.690 - 3.140)	9.66	99
15+35+35	1.52	3.54	3.54		8.60 (2.6 - 10.6)	2.200 (0.690 - 3.210)	9.66	99
15+35+42	1.40	3.27	3.93		8.60 (2.6 - 10.6)	2.180 (0.690 - 3.170)	9.57	99
15+35+50	1.29	3.01	4.30		8.60 (2.6 - 10.6)	2.170 (0.690 - 3.140)	9.53	99
15+35+60	1.17	2.74	4.69		8.60 (2.6 - 10.6)	2.200 (0.690 - 3.140)	9.66	99
15+42+42	1.30	3.65	3.65		8.60 (2.6 - 10.6)	2.160 (0.690 - 3.130)	9.49	99
15+42+50	1.21	3.38	4.02		8.60 (2.6 - 10.6)	2.150 (0.690 - 3.100)	9.44	99
15+42+60	1.10	3.09	4.41		8.60 (2.6 - 10.6)	2.180 (0.690 - 3.100)	9.57	99
15+50+50	1.12	3.74	3.74		8.60 (2.6 - 10.6)	2.140 (0.690 - 3.070)	9.40	99
15+50+60	1.03	3.44	4.13		8.60 (2.6 - 10.6)	2.170 (0.690 - 3.070)	9.53	99
20+20+20	2.20	2.20	2.20		6.60 (2.6 - 9.9)	1.540 (0.890 - 3.080)	6.76	99

MXZ-4C71VA HEATING

Indoor units combination	Heating capacity (kW)					Outdoor unit power consumption(kW)	Current (A)	Power factor(%)
	Unit A	Unit B	Unit C	Unit D	Total			
20+20+22	2.35	2.35	2.59		7.30 (2.6 - 10.1)	1.990 (0.860 - 3.290)	8.74	99
20+20+25	2.55	2.55	3.19		8.30 (2.6 - 10.5)	2.250 (0.860 - 3.300)	9.88	99
20+20+35	2.29	2.29	4.01		8.60 (2.6 - 10.6)	2.330 (0.860 - 3.300)	10.23	99
20+20+42	2.10	2.10	4.40		8.60 (2.6 - 10.6)	2.310 (0.860 - 3.260)	10.14	99
20+20+50	1.91	1.91	4.78		8.60 (2.6 - 10.6)	2.300 (0.860 - 3.230)	10.10	99
20+20+60	1.72	1.72	5.16		8.60 (2.6 - 10.6)	2.330 (0.860 - 3.230)	10.23	99
20+22+22	2.47	2.72	2.72		7.90 (2.6 - 10.4)	2.020 (0.680 - 3.190)	8.87	99
20+22+25	2.57	2.82	3.21		8.60 (2.6 - 10.6)	2.190 (0.680 - 3.200)	9.62	99
20+22+35	2.23	2.46	3.91		8.60 (2.6 - 10.6)	2.190 (0.680 - 3.200)	9.62	99
20+22+42	2.05	2.25	4.30		8.60 (2.6 - 10.6)	2.170 (0.680 - 3.160)	9.53	99
20+22+50	1.87	2.06	4.67		8.60 (2.6 - 10.6)	2.160 (0.680 - 3.130)	9.49	99
20+22+60	1.69	1.85	5.06		8.60 (2.6 - 10.6)	2.190 (0.680 - 3.130)	9.62	99
20+25+25	2.46	3.07	3.07		8.60 (2.6 - 10.6)	2.190 (0.680 - 3.200)	9.62	99
20+25+35	2.15	2.69	3.76		8.60 (2.6 - 10.6)	2.190 (0.680 - 3.200)	9.62	99
20+25+42	1.98	2.47	4.15		8.60 (2.6 - 10.6)	2.170 (0.680 - 3.160)	9.53	99
20+25+50	1.81	2.26	4.53		8.60 (2.6 - 10.6)	2.160 (0.680 - 3.130)	9.49	99
20+25+60	1.64	2.05	4.91		8.60 (2.6 - 10.6)	2.190 (0.680 - 3.130)	9.62	99
20+35+35	1.91	3.34	3.34		8.60 (2.6 - 10.6)	2.190 (0.680 - 3.200)	9.62	99
20+35+42	1.77	3.10	3.72		8.60 (2.6 - 10.6)	2.170 (0.680 - 3.160)	9.53	99
20+35+50	1.64	2.87	4.10		8.60 (2.6 - 10.6)	2.160 (0.680 - 3.130)	9.49	99
20+35+60	1.50	2.62	4.49		8.60 (2.6 - 10.6)	2.190 (0.680 - 3.130)	9.62	99
20+42+42	1.65	3.47	3.47		8.60 (2.6 - 10.6)	2.150 (0.680 - 3.120)	9.44	99
20+42+50	1.54	3.23	3.84		8.60 (2.6 - 10.6)	2.140 (0.680 - 3.090)	9.40	99
20+42+60	1.41	2.96	4.23		8.60 (2.6 - 10.6)	2.170 (0.680 - 3.090)	9.53	99
20+50+50	1.43	3.58	3.58		8.60 (2.6 - 10.6)	2.130 (0.680 - 3.060)	9.35	99
22+22+22	2.87	2.87	2.87		8.60 (2.6 - 10.6)	2.050 (0.500 - 3.100)	9.00	99
22+22+25	2.74	2.74	3.12		8.60 (2.6 - 10.6)	2.050 (0.500 - 3.100)	9.00	99
22+22+35	2.39	2.39	3.81		8.60 (2.6 - 10.6)	2.050 (0.500 - 3.100)	9.00	99
22+22+42	2.20	2.20	4.20		8.60 (2.6 - 10.6)	2.030 (0.500 - 3.060)	8.92	99
22+22+50	2.01	2.01	4.57		8.60 (2.6 - 10.6)	2.020 (0.500 - 3.030)	8.87	99
22+22+60	1.82	1.82	4.96		8.60 (2.6 - 10.6)	2.050 (0.500 - 3.030)	9.00	99
22+25+25	2.63	2.99	2.99		8.60 (2.6 - 10.6)	2.050 (0.500 - 3.100)	9.00	99
22+25+35	2.31	2.62	3.67		8.60 (2.6 - 10.6)	2.050 (0.500 - 3.100)	9.00	99
22+25+42	2.13	2.42	4.06		8.60 (2.6 - 10.6)	2.030 (0.500 - 3.060)	8.92	99
22+25+50	1.95	2.22	4.43		8.60 (2.6 - 10.6)	2.020 (0.500 - 3.030)	8.87	99
22+25+60	1.77	2.01	4.82		8.60 (2.6 - 10.6)	2.050 (0.500 - 3.030)	9.00	99
22+35+35	2.06	3.27	3.27		8.60 (2.6 - 10.6)	2.050 (0.500 - 3.100)	9.00	99
22+35+42	1.91	3.04	3.65		8.60 (2.6 - 10.6)	2.030 (0.500 - 3.060)	8.92	99
22+35+50	1.77	2.81	4.02		8.60 (2.6 - 10.6)	2.020 (0.500 - 3.030)	8.87	99
22+35+60	1.62	2.57	4.41		8.60 (2.6 - 10.6)	2.050 (0.500 - 3.030)	9.00	99

MXZ-4C71VA HEATING

Indoor units combination	Heating capacity (kW)					Outdoor unit power consumption(kW)	Current (A)	Power factor(%)
	Unit A	Unit B	Unit C	Unit D	Total			
22+42+42	1.78	3.41	3.41		8.60 (2.6 - 10.6)	2.010 (0.500 - 3.020)	8.83	99
22+42+50	1.66	3.17	3.77		8.60 (2.6 - 10.6)	2.000 (0.500 - 2.990)	8.78	99
22+42+60	1.53	2.91	4.16		8.60 (2.6 - 10.6)	2.030 (0.500 - 2.990)	8.92	99
22+50+50	1.55	3.52	3.52		8.60 (2.6 - 10.6)	1.990 (0.500 - 2.960)	8.74	99
25+25+25	2.87	2.87	2.87		8.60 (2.6 - 10.6)	2.050 (0.500 - 3.100)	9.00	99
25+25+35	2.53	2.53	3.54		8.60 (2.6 - 10.6)	2.050 (0.500 - 3.100)	9.00	99
25+25+42	2.34	2.34	3.93		8.60 (2.6 - 10.6)	2.030 (0.500 - 3.060)	8.92	99
25+25+50	2.15	2.15	4.30		8.60 (2.6 - 10.6)	2.020 (0.500 - 3.030)	8.87	99
25+25+60	1.95	1.95	4.69		8.60 (2.6 - 10.6)	2.050 (0.500 - 3.030)	9.00	99
25+35+35	2.26	3.17	3.17		8.60 (2.6 - 10.6)	2.050 (0.500 - 3.100)	9.00	99
25+35+42	2.11	2.95	3.54		8.60 (2.6 - 10.6)	2.030 (0.500 - 3.060)	8.92	99
25+35+50	1.95	2.74	3.91		8.60 (2.6 - 10.6)	2.020 (0.500 - 3.030)	8.87	99
25+35+60	1.79	2.51	4.30		8.60 (2.6 - 10.6)	2.050 (0.500 - 3.030)	9.00	99
25+42+42	1.97	3.31	3.31		8.60 (2.6 - 10.6)	2.010 (0.500 - 3.020)	8.83	99
25+42+50	1.84	3.09	3.68		8.60 (2.6 - 10.6)	2.000 (0.500 - 2.990)	8.78	99
25+50+50	1.72	3.44	3.44		8.60 (2.6 - 10.6)	1.990 (0.500 - 2.960)	8.74	99
35+35+35	2.87	2.87	2.87		8.60 (2.6 - 10.6)	2.050 (0.500 - 3.100)	9.00	99
35+35+42	2.69	2.69	3.23		8.60 (2.6 - 10.6)	2.030 (0.500 - 3.060)	8.92	99
35+35+50	2.51	2.51	3.58		8.60 (2.6 - 10.6)	2.020 (0.500 - 3.030)	8.87	99
35+42+42	2.53	3.04	3.04		8.60 (2.6 - 10.6)	2.010 (0.500 - 3.020)	8.83	99
15+15+15+15	1.70	1.70	1.70	1.70	6.80 (3.4 - 9.3)	1.460 (1.370 - 2.450)	6.41	99
15+15+15+20	1.68	1.68	1.68	2.25	7.30 (3.4 - 9.7)	1.630 (0.760 - 2.680)	7.16	99
15+15+15+22	1.66	1.66	1.66	2.43	7.40 (3.4 - 9.8)	1.690 (0.720 - 2.670)	7.42	99
15+15+15+25	1.65	1.65	1.65	2.75	7.70 (3.4 - 10.0)	1.800 (0.720 - 2.810)	7.91	99
15+15+15+35	1.61	1.61	1.61	3.76	8.60 (3.4 - 10.7)	2.130 (1.460 - 3.670)	9.35	99
15+15+15+42	1.48	1.48	1.48	4.15	8.60 (3.4 - 10.7)	1.740 (0.690 - 3.230)	7.64	99
15+15+15+50	1.36	1.36	1.36	4.53	8.60 (3.4 - 10.7)	1.675 (0.680 - 3.240)	7.36	99
15+15+15+60	1.23	1.23	1.23	4.91	8.60 (3.4 - 10.7)	1.645 (0.720 - 3.240)	7.22	99
15+15+20+20	1.65	1.65	2.20	2.20	7.70 (3.4 - 10.0)	1.800 (0.760 - 2.910)	7.91	99
15+15+20+22	1.65	1.65	2.19	2.41	7.90 (3.4 - 10.1)	1.860 (0.720 - 2.900)	8.17	99
15+15+20+25	1.64	1.64	2.19	2.73	8.20 (3.4 - 10.4)	1.960 (0.720 - 3.040)	8.61	99
15+15+20+35	1.52	1.52	2.02	3.54	8.60 (3.4 - 10.7)	1.860 (0.720 - 3.270)	8.17	99
15+15+20+42	1.40	1.40	1.87	3.93	8.60 (3.4 - 10.7)	1.685 (0.690 - 3.230)	7.40	99
15+15+20+50	1.29	1.29	1.72	4.30	8.60 (3.4 - 10.7)	1.675 (0.680 - 3.240)	7.36	99
15+15+20+60	1.17	1.17	1.56	4.69	8.60 (3.4 - 10.7)	1.645 (0.720 - 3.240)	7.22	99
15+15+22+22	1.64	1.64	2.41	2.41	8.10 (3.4 - 10.3)	1.930 (0.680 - 2.890)	8.48	99
15+15+22+25	1.62	1.62	2.37	2.69	8.30 (3.4 - 10.5)	2.030 (0.680 - 3.030)	8.92	99
15+15+22+35	1.48	1.48	2.17	3.46	8.60 (3.4 - 10.7)	1.760 (0.680 - 3.170)	7.73	99
15+15+22+42	1.37	1.37	2.01	3.84	8.60 (3.4 - 10.7)	1.685 (0.650 - 3.130)	7.40	99
15+15+22+50	1.26	1.26	1.85	4.22	8.60 (3.4 - 10.7)	1.675 (0.640 - 3.140)	7.36	99

MXZ-4C71VA HEATING

Indoor units combination	Heating capacity (kW)					Outdoor unit power consumption(kW)	Current (A)	Power factor(%)
	Unit A	Unit B	Unit C	Unit D	Total			
15+15+22+60	1.15	1.15	1.69	4.61	8.60 (3.4 - 10.7)	1.645 (0.680 - 3.140)	7.22	99
15+15+25+25	1.61	1.61	2.69	2.69	8.60 (3.4 - 10.7)	2.130 (1.420 - 3.570)	9.35	99
15+15+25+35	1.43	1.43	2.39	3.34	8.60 (3.4 - 10.7)	1.705 (0.680 - 3.170)	7.49	99
15+15+25+42	1.33	1.33	2.22	3.72	8.60 (3.4 - 10.7)	1.685 (0.650 - 3.130)	7.40	99
15+15+25+50	1.23	1.23	2.05	4.10	8.60 (3.4 - 10.7)	1.675 (0.640 - 3.140)	7.36	99
15+15+25+60	1.12	1.12	1.87	4.49	8.60 (3.4 - 10.7)	1.645 (0.680 - 3.140)	7.22	99
15+15+35+35	1.29	1.29	3.01	3.01	8.60 (3.4 - 10.7)	1.705 (0.680 - 3.170)	7.49	99
15+15+35+42	1.21	1.21	2.81	3.38	8.60 (3.4 - 10.7)	1.685 (0.650 - 3.130)	7.40	99
15+15+35+50	1.12	1.12	2.62	3.74	8.60 (3.4 - 10.7)	1.675 (0.640 - 3.140)	7.36	99
15+15+35+60	1.03	1.03	2.41	4.13	8.60 (3.4 - 10.7)	1.645 (0.680 - 3.140)	7.22	99
15+15+42+42	1.13	1.13	3.17	3.17	8.60 (3.4 - 10.7)	1.665 (0.620 - 3.090)	7.31	99
15+15+42+50	1.06	1.06	2.96	3.52	8.60 (3.4 - 10.7)	1.655 (0.610 - 3.100)	7.27	99
15+20+20+20	1.64	2.19	2.19	2.19	8.20 (3.4 - 10.4)	1.960 (0.760 - 3.140)	8.61	99
15+20+20+22	1.62	2.16	2.16	2.37	8.30 (3.4 - 10.5)	2.030 (0.720 - 3.130)	8.92	99
15+20+20+25	1.61	2.15	2.15	2.69	8.60 (3.4 - 10.7)	2.130 (1.460 - 3.670)	9.35	99
15+20+20+35	1.43	1.91	1.91	3.34	8.60 (3.4 - 10.7)	1.705 (0.720 - 3.270)	7.49	99
15+20+20+42	1.33	1.77	1.77	3.72	8.60 (3.4 - 10.7)	1.685 (0.690 - 3.230)	7.40	99
15+20+20+50	1.23	1.64	1.64	4.10	8.60 (3.4 - 10.7)	1.675 (0.680 - 3.240)	7.36	99
15+20+20+60	1.12	1.50	1.50	4.49	8.60 (3.4 - 10.7)	1.645 (0.720 - 3.240)	7.22	99
15+20+22+22	1.61	2.15	2.37	2.37	8.50 (3.4 - 10.6)	2.100 (0.680 - 3.120)	9.22	99
15+20+22+25	1.57	2.10	2.31	2.62	8.60 (3.4 - 10.7)	2.020 (0.680 - 3.170)	8.87	99
15+20+22+35	1.40	1.87	2.06	3.27	8.60 (3.4 - 10.7)	1.705 (0.680 - 3.170)	7.49	99
15+20+22+42	1.30	1.74	1.91	3.65	8.60 (3.4 - 10.7)	1.685 (0.650 - 3.130)	7.40	99
15+20+22+50	1.21	1.61	1.77	4.02	8.60 (3.4 - 10.7)	1.675 (0.640 - 3.140)	7.36	99
15+20+22+60	1.10	1.47	1.62	4.41	8.60 (3.4 - 10.7)	1.645 (0.680 - 3.140)	7.22	99
15+20+25+25	1.52	2.02	2.53	2.53	8.60 (3.4 - 10.7)	1.860 (0.680 - 3.170)	8.17	99
15+20+25+35	1.36	1.81	2.26	3.17	8.60 (3.4 - 10.7)	1.705 (0.680 - 3.170)	7.49	99
15+20+25+42	1.26	1.69	2.11	3.54	8.60 (3.4 - 10.7)	1.685 (0.650 - 3.130)	7.40	99
15+20+25+50	1.17	1.56	1.95	3.91	8.60 (3.4 - 10.7)	1.675 (0.640 - 3.140)	7.36	99
15+20+25+60	1.08	1.43	1.79	4.30	8.60 (3.4 - 10.7)	1.645 (0.680 - 3.140)	7.22	99
15+20+35+35	1.23	1.64	2.87	2.87	8.60 (3.4 - 10.7)	1.705 (0.680 - 3.170)	7.49	99
15+20+35+42	1.15	1.54	2.69	3.23	8.60 (3.4 - 10.7)	1.685 (0.650 - 3.130)	7.40	99
15+20+35+50	1.08	1.43	2.51	3.58	8.60 (3.4 - 10.7)	1.675 (0.640 - 3.140)	7.36	99
15+20+42+42	1.08	1.45	3.04	3.04	8.60 (3.4 - 10.7)	1.665 (0.620 - 3.090)	7.31	99
15+22+22+22	1.59	2.34	2.34	2.34	8.60 (3.4 - 10.7)	2.080 (0.640 - 3.070)	9.13	99
15+22+22+25	1.54	2.25	2.25	2.56	8.60 (3.4 - 10.7)	1.920 (0.640 - 3.070)	8.43	99
15+22+22+35	1.37	2.01	2.01	3.20	8.60 (3.4 - 10.7)	1.705 (0.640 - 3.070)	7.49	99
15+22+22+42	1.28	1.87	1.87	3.58	8.60 (3.4 - 10.7)	1.685 (0.610 - 3.030)	7.40	99
15+22+22+50	1.18	1.74	1.74	3.94	8.60 (3.4 - 10.7)	1.675 (0.600 - 3.040)	7.36	99
15+22+22+60	1.08	1.59	1.59	4.34	8.60 (3.4 - 10.7)	1.645 (0.640 - 3.040)	7.22	99

MXZ-4C71VA HEATING

Indoor units combination	Heating capacity (kW)					Outdoor unit power consumption(kW)	Current (A)	Power factor(%)
	Unit A	Unit B	Unit C	Unit D	Total			
15+22+25+25	1.48	2.17	2.47	2.47	8.60 (3.4 - 10.7)	1.760 (0.640 - 3.070)	7.73	99
15+22+25+35	1.33	1.95	2.22	3.10	8.60 (3.4 - 10.7)	1.705 (0.640 - 3.070)	7.49	99
15+22+25+42	1.24	1.82	2.07	3.47	8.60 (3.4 - 10.7)	1.685 (0.610 - 3.030)	7.40	99
15+22+25+50	1.15	1.69	1.92	3.84	8.60 (3.4 - 10.7)	1.675 (0.600 - 3.040)	7.36	99
15+22+25+60	1.06	1.55	1.76	4.23	8.60 (3.4 - 10.7)	1.645 (0.640 - 3.040)	7.22	99
15+22+35+35	1.21	1.77	2.81	2.81	8.60 (3.4 - 10.7)	1.705 (0.640 - 3.070)	7.49	99
15+22+35+42	1.13	1.66	2.64	3.17	8.60 (3.4 - 10.7)	1.685 (0.610 - 3.030)	7.40	99
15+22+35+50	1.06	1.55	2.47	3.52	8.60 (3.4 - 10.7)	1.675 (0.600 - 3.040)	7.36	99
15+22+42+42	1.07	1.56	2.99	2.99	8.60 (3.4 - 10.7)	1.665 (0.580 - 2.990)	7.31	99
15+25+25+25	1.43	2.39	2.39	2.39	8.60 (3.4 - 10.7)	1.705 (0.640 - 3.070)	7.49	99
15+25+25+35	1.29	2.15	2.15	3.01	8.60 (3.4 - 10.7)	1.705 (0.640 - 3.070)	7.49	99
15+25+25+42	1.21	2.01	2.01	3.38	8.60 (3.4 - 10.7)	1.685 (0.610 - 3.030)	7.40	99
15+25+25+50	1.12	1.87	1.87	3.74	8.60 (3.4 - 10.7)	1.675 (0.600 - 3.040)	7.36	99
15+25+25+60	1.03	1.72	1.72	4.13	8.60 (3.4 - 10.7)	1.645 (0.640 - 3.040)	7.22	99
15+25+35+35	1.17	1.95	2.74	2.74	8.60 (3.4 - 10.7)	1.705 (0.640 - 3.070)	7.49	99
15+25+35+42	1.10	1.84	2.57	3.09	8.60 (3.4 - 10.7)	1.685 (0.610 - 3.030)	7.40	99
15+25+35+50	1.03	1.72	2.41	3.44	8.60 (3.4 - 10.7)	1.675 (0.600 - 3.040)	7.36	99
15+25+42+42	1.04	1.73	2.91	2.91	8.60 (3.4 - 10.7)	1.665 (0.580 - 2.990)	7.31	99
15+35+35+35	1.08	2.51	2.51	2.51	8.60 (3.4 - 10.7)	1.705 (0.640 - 3.070)	7.49	99
20+20+20+20	2.15	2.15	2.15	2.15	8.60 (3.4 - 10.7)	2.130 (1.340 - 3.370)	9.35	99
20+20+20+22	2.10	2.10	2.10	2.31	8.60 (3.4 - 10.7)	2.020 (0.720 - 3.270)	8.87	99
20+20+20+25	2.02	2.02	2.02	2.53	8.60 (3.4 - 10.7)	1.860 (0.720 - 3.270)	8.17	99
20+20+20+35	1.81	1.81	1.81	3.17	8.60 (3.4 - 10.7)	1.705 (0.720 - 3.270)	7.49	99
20+20+20+42	1.69	1.69	1.69	3.54	8.60 (3.4 - 10.7)	1.685 (0.690 - 3.230)	7.40	99
20+20+20+50	1.56	1.56	1.56	3.91	8.60 (3.4 - 10.7)	1.675 (0.680 - 3.240)	7.36	99
20+20+20+60	1.43	1.43	1.43	4.30	8.60 (3.4 - 10.7)	1.645 (0.720 - 3.240)	7.22	99
20+20+22+22	2.05	2.05	2.25	2.25	8.60 (3.4 - 10.7)	1.920 (0.680 - 3.170)	8.43	99
20+20+22+25	1.98	1.98	2.17	2.47	8.60 (3.4 - 10.7)	1.760 (0.680 - 3.170)	7.73	99
20+20+22+35	1.77	1.77	1.95	3.10	8.60 (3.4 - 10.7)	1.705 (0.680 - 3.170)	7.49	99
20+20+22+42	1.65	1.65	1.82	3.47	8.60 (3.4 - 10.7)	1.685 (0.650 - 3.130)	7.40	99
20+20+22+50	1.54	1.54	1.69	3.84	8.60 (3.4 - 10.7)	1.675 (0.640 - 3.140)	7.36	99
20+20+22+60	1.41	1.41	1.55	4.23	8.60 (3.4 - 10.7)	1.645 (0.680 - 3.140)	7.22	99
20+20+25+25	1.91	1.91	2.39	2.39	8.60 (3.4 - 10.7)	1.705 (0.680 - 3.170)	7.49	99
20+20+25+35	1.72	1.72	2.15	3.01	8.60 (3.4 - 10.7)	1.705 (0.680 - 3.170)	7.49	99
20+20+25+42	1.61	1.61	2.01	3.38	8.60 (3.4 - 10.7)	1.685 (0.650 - 3.130)	7.40	99
20+20+25+50	1.50	1.50	1.87	3.74	8.60 (3.4 - 10.7)	1.675 (0.640 - 3.140)	7.36	99
20+20+25+60	1.38	1.38	1.72	4.13	8.60 (3.4 - 10.7)	1.645 (0.680 - 3.140)	7.22	99
20+20+35+35	1.56	1.56	2.74	2.74	8.60 (3.4 - 10.7)	1.705 (0.680 - 3.170)	7.49	99
20+20+35+42	1.47	1.47	2.57	3.09	8.60 (3.4 - 10.7)	1.685 (0.650 - 3.130)	7.40	99
20+20+35+50	1.38	1.38	2.41	3.44	8.60 (3.4 - 10.7)	1.675 (0.640 - 3.140)	7.36	99

MXZ-4C71VA HEATING

Indoor units combination	Heating capacity (kW)					Outdoor unit power consumption(kW)	Current (A)	Power factor(%)
	Unit A	Unit B	Unit C	Unit D	Total			
20+20+42+42	1.39	1.39	2.91	2.91	8.60 (3.4 - 10.7)	1.665 (0.620 - 3.090)	7.31	99
20+22+22+22	2.00	2.20	2.20	2.20	8.60 (3.4 - 10.7)	1.810 (0.640 - 3.070)	7.95	99
20+22+22+25	1.93	2.13	2.13	2.42	8.60 (3.4 - 10.7)	1.705 (0.640 - 3.070)	7.49	99
20+22+22+35	1.74	1.91	1.91	3.04	8.60 (3.4 - 10.7)	1.705 (0.640 - 3.070)	7.49	99
20+22+22+42	1.62	1.78	1.78	3.41	8.60 (3.4 - 10.7)	1.685 (0.610 - 3.030)	7.40	99
20+22+22+50	1.51	1.66	1.66	3.77	8.60 (3.4 - 10.7)	1.675 (0.600 - 3.040)	7.36	99
20+22+22+60	1.39	1.53	1.53	4.16	8.60 (3.4 - 10.7)	1.645 (0.640 - 3.040)	7.22	99
20+22+25+25	1.87	2.06	2.34	2.34	8.60 (3.4 - 10.7)	1.705 (0.640 - 3.070)	7.49	99
20+22+25+35	1.69	1.85	2.11	2.95	8.60 (3.4 - 10.7)	1.705 (0.640 - 3.070)	7.49	99
20+22+25+42	1.58	1.74	1.97	3.31	8.60 (3.4 - 10.7)	1.685 (0.610 - 3.030)	7.40	99
20+22+25+50	1.47	1.62	1.84	3.68	8.60 (3.4 - 10.7)	1.675 (0.600 - 3.040)	7.36	99
20+22+35+35	1.54	1.69	2.69	2.69	8.60 (3.4 - 10.7)	1.705 (0.640 - 3.070)	7.49	99
20+22+35+42	1.45	1.59	2.53	3.04	8.60 (3.4 - 10.7)	1.685 (0.610 - 3.030)	7.40	99
20+25+25+25	1.81	2.26	2.26	2.26	8.60 (3.4 - 10.7)	1.705 (0.640 - 3.070)	7.49	99
20+25+25+35	1.64	2.05	2.05	2.87	8.60 (3.4 - 10.7)	1.705 (0.640 - 3.070)	7.49	99
20+25+25+42	1.54	1.92	1.92	3.23	8.60 (3.4 - 10.7)	1.685 (0.610 - 3.030)	7.40	99
20+25+25+50	1.43	1.79	1.79	3.58	8.60 (3.4 - 10.7)	1.675 (0.600 - 3.040)	7.36	99
20+25+35+35	1.50	1.87	2.62	2.62	8.60 (3.4 - 10.7)	1.705 (0.640 - 3.070)	7.49	99
20+25+35+42	1.41	1.76	2.47	2.96	8.60 (3.4 - 10.7)	1.685 (0.610 - 3.030)	7.40	99
20+35+35+35	1.38	2.41	2.41	2.41	8.60 (3.4 - 10.7)	1.705 (0.640 - 3.070)	7.49	99
22+22+22+22	2.15	2.15	2.15	2.15	8.60 (3.4 - 10.7)	1.705 (0.600 - 2.970)	7.49	99
22+22+22+25	2.08	2.08	2.08	2.36	8.60 (3.4 - 10.7)	1.705 (0.600 - 2.970)	7.49	99
22+22+22+35	1.87	1.87	1.87	2.98	8.60 (3.4 - 10.7)	1.705 (0.600 - 2.970)	7.49	99
22+22+22+42	1.75	1.75	1.75	3.34	8.60 (3.4 - 10.7)	1.685 (0.570 - 2.930)	7.40	99
22+22+22+50	1.63	1.63	1.63	3.71	8.60 (3.4 - 10.7)	1.675 (0.560 - 2.940)	7.36	99
22+22+25+25	2.01	2.01	2.29	2.29	8.60 (3.4 - 10.7)	1.705 (0.600 - 2.970)	7.49	99
22+22+25+35	1.82	1.82	2.07	2.89	8.60 (3.4 - 10.7)	1.705 (0.600 - 2.970)	7.49	99
22+22+25+42	1.70	1.70	1.94	3.25	8.60 (3.4 - 10.7)	1.685 (0.570 - 2.930)	7.40	99
22+22+25+50	1.59	1.59	1.81	3.61	8.60 (3.4 - 10.7)	1.675 (0.560 - 2.940)	7.36	99
22+22+35+35	1.66	1.66	2.64	2.64	8.60 (3.4 - 10.7)	1.705 (0.600 - 2.970)	7.49	99
22+22+35+42	1.56	1.56	2.49	2.99	8.60 (3.4 - 10.7)	1.685 (0.570 - 2.930)	7.40	99
22+25+25+25	1.95	2.22	2.22	2.22	8.60 (3.4 - 10.7)	1.705 (0.600 - 2.970)	7.49	99
22+25+25+35	1.77	2.01	2.01	2.81	8.60 (3.4 - 10.7)	1.705 (0.600 - 2.970)	7.49	99
22+25+25+42	1.66	1.89	1.89	3.17	8.60 (3.4 - 10.7)	1.685 (0.570 - 2.930)	7.40	99
22+25+25+50	1.55	1.76	1.76	3.52	8.60 (3.4 - 10.7)	1.675 (0.560 - 2.940)	7.36	99
22+25+35+35	1.62	1.84	2.57	2.57	8.60 (3.4 - 10.7)	1.705 (0.600 - 2.970)	7.49	99
22+25+35+42	1.53	1.73	2.43	2.91	8.60 (3.4 - 10.7)	1.685 (0.570 - 2.930)	7.40	99
25+25+25+25	2.15	2.15	2.15	2.15	8.60 (3.4 - 10.7)	1.705 (0.600 - 2.970)	7.49	99
25+25+25+35	1.95	1.95	1.95	2.74	8.60 (3.4 - 10.7)	1.705 (0.600 - 2.970)	7.49	99
25+25+25+42	1.84	1.84	1.84	3.09	8.60 (3.4 - 10.7)	1.685 (0.570 - 2.930)	7.40	99

MXZ-4C71VA HEATING

Indoor units combination	Heating capacity (kW)					Outdoor unit power consumption(kW)	Current (A)	Power factor(%)
	Unit A	Unit B	Unit C	Unit D	Total			
25+25+25+50	1.72	1.72	1.72	3.44	8.60 (3.4 - 10.7)	1.675 (0.560 - 2.940)	7.36	99
25+25+35+35	1.79	1.79	2.51	2.51	8.60 (3.4 - 10.7)	1.705 (0.600 - 2.970)	7.49	99

MITSUBISHI ELECTRIC
Changes for the Better
LIVING ENVIRONMENT SYSTEMS

MITSUBISHI ELECTRIC EUROPE B.V.
LIVING ENVIRONMENT SYSTEMS
GOTHAER STR. 8
D-40880 RATINGEN
www.mitsubishi-les.de

Technische Änderungen vorbehalten
Ref.: „*Außengerät MXZ-4C71VA*-E1“ /
doku274 1. Version
Printed in Germany 11/2010
Quelle: OBH584