MITSUBISHI ELECTRIC
AIR CONDITIONING SYSTEMS

Changes for the Better

CITY MULTI

G7

DATA BOOK

R410A Series

Preface

DATABOOK describes the technical specifications of MITSUBISHI ELECTRIC Corp.'s CITYMULTI air conditioning system products.

DATABOOK G7 is updated from DATABOOK G6.
The contents below are added as well as some minor revisions.

Indoor: PDFY-P-VM-E is deleted.

Outdoor: PQHY-P650/700/750/800/850/900YSHM-A are added to the lineup.

BC Controller: CMB-P-V-G is changed to CMB-P-V-G1.
CMB-P-V-GA and CMB-P-V-HA are changed to CMB-P-V-GA1 and CMB-P-V-HA1.
CMB-P-V-GB and CMB-P-V-HB are changed to CMB-P-V-GB1 and CMB-P-V-HB1.

Controller: BM ADAPTER BAC-HD150 (connection of 150 units) is added to the lineup.

We recommend DATABOOK users to read carefully and take advantage of all the contents inside to design the CITY MULTI air conditioning system and/or to prepare documents for promotions.

Along with the DATABOOK, MITSUBISHI ELECTRIC provides a Design-Tool software to ensure the users to design the system correctly and simplify the calculations. Please contact your local distributor for this software.

Please be notified that specifications are subject to change without notice due to continual improvements of the product.
For any inquiries, please contact your local distributor.

CITY MULTI
Databook G7

1. INDOOR

GENERAL LINE-UP ..... 1 - 2

Ceiling concealed (Silent/Slim/High static pressure type) ..... 1 - 3
PEFY-P-VMR-E-L/R, PEFY-P-VMS1(L)-E, PEFY-P-VMH-E

Ceiling concealed (Middle static pressure type) 1- 41
PEFY-P-VMA(L)-E

Ceiling concealed (Fresh air intake) ..... 1 - 77
PEFY-P-VMH-E-F

Ceiling cassette (1-way flow type) ..... 1 - 97
PMFY-P-VBM-E

Ceiling cassette (2-way flow type) ..... 1 - 105
PLFY-P-VLMD-E

Ceiling cassette (4-way flow type) ..... 1 - 119
PLFY-P-VCM-E, PLFY-P-VBM-E

Ceiling suspended ..... 1 - 137
PCFY-P-VKM-E

Wall mounted ..... 1 - 149
PKFY-P-VBM-E, PKFY-P-VHM-E, PKFY-P-VKM-E

Floor standing (Exposed 2-way/Exposed/Concealed type) ..... 1 - 163
PFFY-P-VKM-E, PFFY-P-VLEM-E, PFFY-P-VLRM-E, PFFY-P-VLRMM-E

LOSSNAY ..... 1 - 187
LGH-RX5-E

OA processing unit ..... 1 - 199
GUF-RD3, GUF-RDH3

BC controller ..... 1 - 207
CMB-P-V-G1, CMB-P-V-GA1, CMB-P-V-HA1, CMB-P-V-GB1, CMB-P-V-HB1

CAPACITY TABLE ..... 1 - 233

2. OUTDOOR

GENERAL LINE-UP ..... 2 - 2

S SERIES ..... 2 - 7

Y SERIES ..... 2 - 27

Y (HIGH COP) SERIES ..... 2 - 85

HP (ZUBADAN) SERIES ..... 2 - 133

R2 SERIES ..... 2 - 151

R2 (HIGH COP) SERIES ..... 2 - 193

WY SERIES ..... 2 - 227

WR2 SERIES ..... 2 - 295

CITY MULTI
Databook G7

3. CONTROLLER

MITSUBISHI ELECTRIC's Air-conditioner Network System. (MELANS) ..... 3 - 2
Local remote controller ..... 3 - 4
System remote controller ..... 3 - 11
System component ..... 3 - 82

4. SYSTEM DESIGN

SYSTEM DESIGN S SERIES ..... 4 - 3
SYSTEM DESIGN Y SERIES ..... 4 - 35
SYSTEM DESIGN HP (ZUBADAN) SERIES ..... 4 - 81
SYSTEM DESIGN R2 SERIES ..... 4 - 123
SYSTEM DESIGN WY SERIES ..... 4 - 169
SYSTEM DESIGN WR2 SERIES ..... 4 - 207

CITY MULTI
1. INDOOR UNITS

GENERAL LINE-UP ..... 1 - 2

Ceiling concealed (Silent/Slim/High static pressure type) ..... 1 - 3
PEFY-P-VMR-E-L/R, PEFY-P-VMS1(L)-E, PEFY-P-VMH-E

Ceiling concealed (Middle static pressure type) ..... 1 - 41
PEFY-P-VMA(L)-E

Ceiling concealed (Fresh air intake) ..... 1 - 77
PEFY-P-VMH-E-F

Ceiling cassette (1-way flow type) ..... 1 - 97
PMFY-P-VBM-E

Ceiling cassette (2-way flow type) ..... 1 - 105
PLFY-P-VLMD-E

Ceiling cassette (4-way flow type) ..... 1 - 119
PLFY-P-VCM-E, PLFY-P-VBM-E

Ceiling suspended ..... 1 - 137
PCFY-P-VKM-E

Wall mounted ..... 1 - 149
PKFY-P-VBM-E, PKFY-P-VHM-E, PKFY-P-VKM-E

Floor standing (Exposed 2-way/Exposed/Concealed type) ..... 1 - 163
PFFY-P-VKM-E, PFFY-P-VLEM-E, PFFY-P-VLRM-E, PFFY-P-VLRMM-E

LOSSNAY ..... 1 - 187
LGH-RX5-E

OA processing unit ..... 1 - 199
GUF-RD3, GUF-RDH3

BC controller ..... 1 - 207
CMB-P-V-G1, CMB-P-V-GA1, CMB-P-V-HA1, CMB-P-V-GB1, CMB-P-V-HB1

CAPACITY TABLE ..... 1 - 233

Indoor Units Line-up of CITY MULTI R410A Series.

All the indoor units are subject to CE and CCC regulation.

Model size		P15	P20	P25	P32	P40	P50	P63	P71	P80	P100	P125	P140	P200	P250
Nominal HP		**0.6HP**	**0.8HP**	**1.0HP**	**1.3HP**	**1.6HP**	**2.0HP**	**2.5HP**	**2.8HP**	**3.2HP**	**4.0HP**	**5.0HP**	**5.6HP**	**8.0HP**	**10.0HP**
Nominal cooling cap.*1	kW	1.7	2.2	2.8	3.6	4.5	5.6	7.1	8.0	9.0	11.2	14.0	16.0	22.4	28.0
	kcal/h	1,450	1,900	2,400	3,100	3,900	4,800	6,100	6,900	7,700	9,600	12,000	13,800	19,300	24,100
	Btu/h	5,800	7,500	9,600	12,300	15,400	19,100	24,200	27,300	30,700	38,200	47,800	54,600	76,400	95,500
Nominal cooling cap.*2	kW	1.8	2.3	2.9	3.7	4.7	5.8	7.3	8.3	9.3	11.6	14.5	16.3	23.2	29.1
	kcal/h	1,500	2,000	2,500	3,200	4,000	5,000	6,300	7,100	8,000	10,000	12,500	14,000	20,000	25,000
	Btu/h	6,100	7,800	9,900	12,600	16,000	19,800	24,900	28,300	31,700	39,600	49,500	55,600	79,200	99,300
Nominal heating cap.*3	kW	1.9	2.5	3.2	4.0	5.0	6.3	8.0	9.0	10.0	12.5	16.0	18.0	25.0	31.5
	kcal/h	1,600	2,200	2,800	3,400	4,300	5,400	6,900	7,700	8,600	10,800	13,800	15,500	21,500	27,100
	Btu/h	6,500	8,500	10,900	13,600	17,100	21,500	27,300	30,700	34,100	42,700	54,600	61,400	85,300	107,500
Ceiling concealed		PEFY-P-VMR-E-L/R	PEFY-P-VMS1(L)-E	PEFY-P-VMH-E	PEFY-P-VMA(L)-E	PEFY-P-VMH-E-F									
PEFY-P-VMR-E-L/R			●	●	●										
PEFY-P-VMS1(L)-E		●	●	●	●	●	●	●							
PEFY-P-VMH-E						●	●	●	●	●	●	●	●	●	●
PEFY-P-VMA(L)-E			●	●	●	●	●	●	●	●	●	●	●		
PEFY-P-VMH-E-F										●			●	●	●
Ceiling cassette		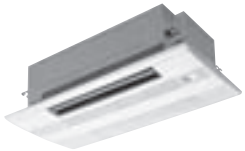 PMFY-P-VBM-E	PLFY-P-VLMD-E	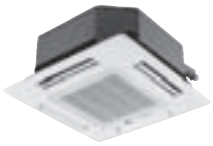 PLFY-P-VCM-E	PLFY-P-VBM-E										
PMFY-P-VBM-E			●	●	●	●									
PLFY-P-VLMD-E			●	●	●	●	●	●		●	●	●			
PLFY-P-VCM-E			●	●	●	●									
PLFY-P-VBM-E					●	●	●	●		●	●	●			
Ceiling suspended		PCFY-P-VKM-E													
PCFY-P-VKM-E						●		●			●	●			
Wall mounted		PKFY-P-VBM-E	PKFY-P-VHM-E	PKFY-P-VKM-E											
PKFY-P-VBM-E		●	●	●											
PKFY-P-VHM-E					●	●	●								
PKFY-P-VKM-E								●			●				
Floor standing		PFFY-P-VKM-E	PFFY-P-VLEM-E	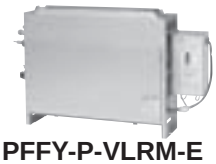 PFFY-P-VLRM-E PFFY-P-VLRMM-E											
PFFY-P-VKM-E			●	●	●	●									
PFFY-P-VLEM-E			●	●	●	●	●	●							
PFFY-P-VLRM-E			●	●	●	●	●	●							
PFFY-P-VLRMM-E			●	●	●	●	●	●							

* kcal/h=round(kWx860,-2), Btu/h=round(kWx3,412,-2)
* Nominal conditions *1, *2, *3 are referable at the Specification sheet.

PEFY-P-VMR-E-L/R
PEFY-P-VMS1(L)-E
PEFY-P-VMH-E

1. SPECIFICATIONS 1 - 4

2. EXTERNAL DIMENSIONS 1 - 10

3. CENTER OF GRAVITY 1 - 15

4. ELECTRICAL WIRING DIAGRAMS 1 - 16

5. SOUND LEVELS
   5-1. Sound levels 1 - 20
   5-2. NC curves 1 - 21
   5-3. Fan characteristics curves 1 - 28

6. Optional parts for PEFY-P-VMS1L-E,VMH-E 1 - 36

Model			PEFY-P20VMR-E-L/R	PEFY-P25VMR-E-L/R	PEFY-P32VMR-E-L/R
Power source			1-phase 220-240V 50Hz / 220-230V 60Hz		
Cooling capacity (Nominal)	✻1	kW	2.2	2.8	3.6
	✻1	kcal / h	1,900	2,400	3,100
	✻1	Btu / h	7,500	9,600	12,300
	✻2	kcal / h	2,000	2,500	3,150
✻4	Power input	kW	0.06 / 0.06	0.06 / 0.06	0.07 / 0.08
✻4	Current input	A	0.29 / 0.29 (220V)	0.29 / 0.29 (220V)	0.34 / 0.38 (220V)
Heating capacity (Nominal)	✻3	kW	2.5	3.2	4.0
	✻3	kcal / h	2,200	2,800	3,400
	✻3	Btu / h	8,500	10,900	13,600
✻4	Power input	kW	0.06 / 0.06	0.06 / 0.06	0.07 / 0.08
✻4	Current input	A	0.29 / 0.29 (220V)	0.29 / 0.29 (220V)	0.34 / 0.38 (220V)
External finish			Galvanized		
External dimension H x W x D		mm	292 x 640 x 580	292 x 640 x 580	292 x 640 x 580
		in.	11-1/2 x 25-1/4 x 22-7/8	11-1/2 x 25-1/4 x 22-7/8	11-1/2 x 25-1/4 x 22-7/8
Net weight		kg (lb)	18 (40)	18 (40)	18 (40)
Heat exchanger			Cross fin (Aluminum fin and copper tube)		
FAN	Type x Quantity		Sirocco fan x 1	Sirocco fan x 1	Sirocco fan x 1
	External (220V) static press.	Pa	5	5	5
		mmH_2O	0.5	0.5	0.5
	(230, 240V)	Pa	5	5	5
	✻5	mmH_2O	0.5	0.5	0.5
	Motor type		1-phase induction motor		
	Motor output	kW	0.018	0.018	0.023
	Driving mechanism		Direct-driven by motor		
	Airflow rate (Low-Mid-High)	m^3 / min	4.8 - 5.8 - 7.9	4.8 - 5.8 - 7.9	4.8 - 5.8 - 9.3
		L / s	80 - 97 - 132	80 - 97 - 132	80 - 97 - 155
		cfm	170 - 205 - 279	170 - 205 - 279	170 - 205 - 328
Sound pressure level (Low-Mid-High) (measured in anechoic room)		dB <A>	20 - 25 - 30 * (220V)	20 - 25 - 30 * (220V)	20 - 25 - 33 * (220V)
		dB <A>	21 - 26 - 32 * (230V)	21 - 26 - 32 * (230V)	21 - 26 - 35 * (230V)
	✻4	dB <A>	22 - 27 - 30 * (240V)	22 - 27 - 30 * (240V)	22 - 27 - 33 * (240V)
Insulation material			Polystyrene foam, Polyethylene foam, Urethane foam		
Air filter			PP Honeycomb fabric (washable)		
Protection device			Fuse		
Refrigerant control device			LEV		
Connectable outdoor unit			R410A CITY MULTI		
Diameter of refrigerant pipe	Liquid (R410A)	mm (in.)	ø6.35 (ø1/4) Brazed	ø6.35 (ø1/4) Brazed	ø6.35 (ø1/4) Brazed
	Gas (R410A)	mm (in.)	ø12.7 (ø1/2) Brazed	ø12.7 (ø1/2) Brazed	ø12.7 (ø1/2) Brazed
Field drain pipe size		mm (in.)	O.D. 26mm (1)		
Drawing	External		IU-KB94-C854	IU-KB94-C854	IU-KB94-C854
	Wiring		IU-KB94-C858	IU-KB94-C858	IU-KB94-C858
	Refrigerant cycle		-	-	-
Standard attachment	Document		Installation Manual, Instruction Book		
	Accessory		Drain hose I.D. 26mm (1) (flexible joint)		
Remark			* Above sound pressure level is tested in rear air inlet case. It will be a little higher in bottom air inlet case.		
	Installation		Details on foundation work, duct work, insulation work, electrical wiring, power source switch, and other items shall be referred to the Installation Manual.		

Note :

	✻1 Nominal cooling conditions	✻2 Nominal cooling conditions	✻3 Nominal heating conditions
Indoor :	27˚CDB/19˚CWB (81˚FDB/66˚FWB)	27˚CDB/19.5˚CWB (81˚FDB/67˚FWB)	20˚CDB (68˚FDB)
Outdoor :	35˚CDB (95˚FDB)	35˚CDB (95˚FDB)	7˚CDB/6˚CWB (45˚FDB/43˚FWB)
Pipe length :	7.5 m (24-9/16 ft)	5 m (16-3/8 ft)	7.5 m (24-9/16 ft)
Level difference :	0 m (0 ft)	0 m (0 ft)	0 m (0 ft)

* Nominal conditions ✻1, ✻3 are subject to JIS B8615-1.
* Due to continuing improvement, above specification may be subject to change without notice.

✻4 The values are measured at the rated external static pressure.
✻5 The figure in < > indicates the value when external static pressure is changed.

Unit converter

kcal/h = kW x 860
Btu/h = kW x 3,412
cfm = m^3/min x 35.31
lb = kg / 0.4536

*Above specification data is subject to rounding variation.

Ref.: Spec_PEFY-P-VMR-E-L/R

1. SPECIFICATIONS

Model			PEFY-P15VMS1(L)-E	PEFY-P20VMS1(L)-E	PEFY-P25VMS1(L)-E	PEFY-P32VMS1(L)-E
Power source			220-240V (50/60Hz)			
Cooling capacity (Nominal)	✻1	kW	1.7	2.2	2.8	3.6
	✻1	kcal / h	1,450	1,900	2,400	3,100
	✻1	Btu / h	5,800	7,500	9,600	12,300
	✻2	kcal / h	1,500	2,000	2,500	3,150
✻4	Power input	kW	0.05<0.03>	0.05<0.03>	0.06<0.04>	0.07<0.05>
✻4	Current input	A	0.42<0.31>	0.47<0.36>	0.50<0.39>	0.50<0.39>
Heating capacity (Nominal)	✻3	kW	1.9	2.5	3.2	4.0
	✻3	kcal / h	1,600	2,200	2,800	3,400
	✻3	Btu / h	6,500	8,500	10,900	13,600
✻4	Power input	kW	0.03<0.03>	0.03<0.03>	0.04<0.04>	0.05<0.05>
✻4	Current input	A	0.31<0.31>	0.36<0.36>	0.39<0.39>	0.39<0.39>
External finish			Galvanized			
External dimension H x W x D		mm	200 x 790 x 700	200 x 790 x 700	200 x 790 x 700	200 x 790 x 700
		in.	7-7/8 x 31-1/8 x 27-9/16	7-7/8 x 31-1/8 x 27-9/16	7-7/8 x 31-1/8 x 27-9/16	7-7/8 x 31-1/8 x 27-9/16
Net weight		kg (lb)	19(42)<18(40)>	19(42)<18(40)>	19(42)<18(40)>	20(44)<19(42)>
Heat exchanger			Cross fin (Aluminum fin and copper tube)			
FAN	Type x Quantity		Sirocco fan x 2	Sirocco fan x 2	Sirocco fan x 2	Sirocco fan x 2
	External static press. (220V)	Pa	<5> - 15 - <35> - <50>	<5> - 15 - <35> - <50>	<5> - 15 - <35> - <50>	<5> - 15 - <35> - <50>
		mmH_2O	<0.5> - 1.5 - <3.6> - <5.1>	<0.5> - 1.5 - <3.6> - <5.1>	<0.5> - 1.5 - <3.6> - <5.1>	<0.5> - 1.5 - <3.6> - <5.1>
	(230, 240V)	Pa	<5> - 15 - <35> - <50>	<5> - 15 - <35> - <50>	<5> - 15 - <35> - <50>	<5> - 15 - <35> - <50>
	✻5	mmH_2O	<0.5> - 1.5 - <3.6> - <5.1>	<0.5> - 1.5 - <3.6> - <5.1>	<0.5> - 1.5 - <3.6> - <5.1>	<0.5> - 1.5 - <3.6> - <5.1>
	Motor type		DC brushless motor			
	Motor output	kW	0.096	0.096	0.096	0.096
	Driving mechanism		Direct-driven			
	Airflow rate (Low-Mid-High)	m^3 / min	5 - 6 - 7	5.5 - 6.5 - 8	5.5 - 7 - 9	6 - 8 - 10
		L / s	83 - 100 - 117	91 - 108 - 133	91 - 117 - 150	100 - 133 - 167
		cfm	176 - 212 - 247	194 - 229 - 282	194 - 247 - 317	212 - 282 - 353
Sound pressure level (Low-Mid-High) (measured in anechoic room) ✻4		dB <A>	22 - 24 - 28(15Pa,220-240V)	23 - 25 - 29(15Pa,220-240V)	24 - 26 - 30(15Pa,220-240V)	24 - 27 - 32(15Pa,220-240V)
Insulation material			Polystyrene foam, Polyethylene foam, Urethane foam			
Air filter			PP Honeycomb fabric (washable)			
Protection device			Fuse			
Refrigerant control device			LEV			
Connectable outdoor unit			PURY-P-Y(S)HM-A, PUHY-P-Y(S)HM-A PUMY-P100-140VHMB, PUMY-P100-140YHMB	R410A CITY MULTI		
Diameter of refrigerant pipe	Liquid (R410A)	mm (in.)	ø6.35 (ø1/4) Brazed	ø6.35 (ø1/4) Brazed	ø6.35 (ø1/4) Brazed	ø6.35 (ø1/4) Brazed
	Gas (R410A)	mm (in.)	ø12.7 (ø1/2) Brazed	ø12.7 (ø1/2) Brazed	ø12.7 (ø1/2) Brazed	ø12.7 (ø1/2) Brazed
Field drain pipe size		mm (in.)	O.D. 32mm (1-1/4)			
Drawing	External		IU-KB94-G728<IU-KB94-G731>	IU-KB94-G728<IU-KB94-G731>	IU-KB94-G728<IU-KB94-G731>	IU-KB94-G728<IU-KB94-G731>
	Wiring		IU-KB94-G668	IU-KB94-G668	IU-KB94-G668	IU-KB94-G668
	Refrigerant cycle		-	-	-	-
Standard attachment	Document		Installation Manual, Instruction Book			
	Accessory		Drain hose (flexible joint)			
Remark	Optional parts					
	Drain pump		<PAC-KE07DM-E>	<PAC-KE07DM-E>	<PAC-KE07DM-E>	<PAC-KE07DM-E>
	Control Box Replace kit		<PAC-KE70HS-E>	<PAC-KE70HS-E>	<PAC-KE70HS-E>	<PAC-KE70HS-E>
	Installation		Details on foundation work, duct work, insulation work, electrical wiring, power source switch, and other items shall be referred to the Installation Manual.			

Note :

	✻1 Nominal cooling conditions	✻2 Nominal cooling conditions	✻3 Nominal heating conditions
Indoor :	27˚CDB/19˚CWB (81˚FDB/66˚FWB)	27˚CDB/19.5˚CWB (81˚FDB/67˚FWB)	20˚CDB (68˚FDB)
Outdoor :	35˚CDB (95˚FDB)	35˚CDB (95˚FDB)	7˚CDB/6˚CWB (45˚FDB/43˚FWB)
Pipe length :	7.5 m (24-9/16 ft)	5 m (16-3/8 ft)	7.5 m (24-9/16 ft)
Level difference :	0 m (0 ft)	0 m (0 ft)	0 m (0 ft)

* Nominal conditions ✻1, ✻3 are subject to JIS B8615-1.
* Due to continuing improvement, above specification may be subject to change without notice.
* The external static pressure is set to 15 Pa at factory shipment.
* < > is in case of PEFY-P-VMS1L-E model.

✻4 The values are measured at the rated external static pressure.
✻5 The figure in < > indicates the value when external static pressure is changed.

Unit converter

kcal/h	= kW x 860
Btu/h	= kW x 3,412
cfm	= m^3/min x 35.31
lb	= kg / 0.4536

*Above specification data is subject to rounding variation.

Ref.: Spec_PEFY-P-VMS-E_1

Model			PEFY-P40VMS1(L)-E	PEFY-P50VMS1(L)-E	PEFY-P63VMS1(L)-E
Power source			220-240V (50/60Hz)		
Cooling capacity (Nominal)	✻1	kW	4.5	5.6	7.1
	✻1	kcal / h	3,900	4,800	6,100
	✻1	Btu / h	15,400	19,100	24,200
	✻2	kcal / h	4,000	5,000	6,300
✻4	Power input	kW	0.07<0.05>	0.09<0.07>	0.09<0.07>
✻4	Current input	A	0.56<0.45>	0.67<0.56>	0.72<0.61>
Heating capacity (Nominal)	✻3	kW	5.0	6.3	8.0
	✻3	kcal / h	4,300	5,400	6,900
	✻3	Btu / h	17,100	21,500	27,300
✻4	Power input	kW	0.05<0.05>	0.07<0.07>	0.07<0.07>
✻4	Current input	A	0.45<0.45>	0.56<0.56>	0.61<0.61>
External finish			Galvanized		
External dimension H x W x D		mm	200 x 990 x 700	200 x 990 x 700	200 x 1190 x 700
		in.	7-7/8 x 39 x 27-9/16	7-7/8 x 39 x 27-9/16	7-7/8 x 46-7/8 x 27-9/16
Net weight		kg (lb)	24(53)<23(51)>	24(53)<23(51)>	28(62)<27(60)>
Heat exchanger			Cross fin (Aluminum fin and copper tube)		
FAN	Type x Quantity		Sirocco fan x 3	Sirocco fan x 3	Sirocco fan x 4
	External static press. (220V)	Pa	<5> - 15 - <35> - <50>	<5> - 15 - <35> - <50>	<5> - 15 - <35> - <50>
		mmH_2O	<0.5> - 1.5 - <3.6> - <5.1>	<0.5> - 1.5 - <3.6> - <5.1>	<0.5> - 1.5 - <3.6> - <5.1>
	(230, 240V)	Pa	<5> - 15 - <35> - <50>	<5> - 15 - <35> - <50>	<5> - 15 - <35> - <50>
	✻5	mmH_2O	<0.5> - 1.5 - <3.6> - <5.1>	<0.5> - 1.5 - <3.6> - <5.1>	<0.5> - 1.5 - <3.6> - <5.1>
	Motor type		DC brushless motor		
	Motor output	kW	0.096	0.096	0.096
	Driving mechanism		Direct-driven		
	Airflow rate (Low-Mid-High)	m^3 / min	8 - 9.5 - 11	9.5 - 11 - 13	12 - 14 - 16.5
		L / s	133 - 158 - 183	158 - 183 - 217	200 - 233 - 275
		cfm	282 - 335 - 388	335 - 388 - 459	424 - 494 - 583
Sound pressure level (Low-Mid-High) (measured in anechoic room)	✻4	dB <A>	28 - 30 - 33 (15Pa,220-240V)	30 - 32 - 35 (15Pa,220-240V)	30 - 33 - 36 (15Pa,220-240V)
Insulation material			Polystyrene foam, Polyethylene foam, Urethane foam		
Air filter			PP Honeycomb fabric (washable)		
Protection device			Fuse		
Refrigerant control device			LEV		
Connectable outdoor unit			R410A CITY MULTI		
Diameter of refrigerant pipe	Liquid (R410A)	mm (in.)	ø6.35 (ø1/4) Brazed	ø6.35 (ø1/4) Brazed	ø9.52 (ø3/8) Brazed
	Gas (R410A)	mm (in.)	ø12.7 (ø1/2) Brazed	ø12.7 (ø1/2) Brazed	ø15.88 (ø5/8) Brazed
Field drain pipe size		mm (in.)	O.D. 32mm (1-1/4)		
Drawing	External		IU-KB94-G728(IU-KB94-G731)	IU-KB94-G728(IU-KB94-G731)	IU-KB94-G728(IU-KB94-G731)
	Wiring		IU-KB94-G668	IU-KB94-G668	IU-KB94-G668
	Refrigerant cycle		-	-	-
Standard attachment	Document		Installation Manual, Instruction Book		
	Accessory		Drain hose (flexible joint)		
Remark	Optional parts				
	Drain pump		<PAC-KE07DM-E>	<PAC-KE07DM-E>	<PAC-KE07DM-E>
	Control Box Replace kit		<PAC-KE70HS-E>	<PAC-KE70HS-E>	<PAC-KE70HS-E>
	Installation		Details on foundation work, duct work, insulation work, electrical wiring, power source switch, and other items shall be referred to the Installation Manual.		

Note :

	✻1 Nominal cooling conditions	✻2 Nominal cooling conditions	✻3 Nominal heating conditions
Indoor :	27˚CDB/19˚CWB (81˚FDB/66˚FWB)	27˚CDB/19.5˚CWB (81˚FDB/67˚FWB)	20˚CDB (68˚FDB)
Outdoor :	35˚CDB (95˚FDB)	35˚CDB (95˚FDB)	7˚CDB/6˚CWB (45˚FDB/43˚FWB)
Pipe length :	7.5 m (24-9/16 ft)	5 m (16-3/8 ft)	7.5 m (24-9/16 ft)
Level difference :	0 m (0 ft)	0 m (0 ft)	0 m (0 ft)

* Nominal conditions ✻1, ✻3 are subject to JIS B8615-1.
* Due to continuing improvement, above specification may be subject to change without notice.
* The external static pressure is set to 15 Pa at factory shipment.
* < > is in case of PEFY-P-VMS1L-E model.

✻4 The values are measured at the rated external static pressure.
✻5 The figure in < > indicates the value when external static pressure is changed.

Unit converter

kcal/h = kW x 860
Btu/h = kW x 3,412
cfm = m^3/min x 35.31
lb = kg / 0.4536

*Above specification data is subject to rounding variation.

Ref.: Spec_PEFY-P-VMS-E_1

1. SPECIFICATIONS

Model			PEFY-P40VMH-E	PEFY-P50VMH-E	PEFY-P63VMH-E	PEFY-P71VMH-E
Power source			1-phase 220-240V 50Hz/60Hz			
Cooling capacity (Nominal)	✻1	kW	4.5	5.6	7.1	8.0
	✻1	kcal / h	3,900	4,800	6,100	6,900
	✻1	Btu / h	15,400	19,100	24,200	27,300
	✻2	kcal / h	4,000	5,000	6,300	7,100
✻4	Power input	kW	0.19 / 0.23	0.19 / 0.23	0.24 / 0.30	0.26 / 0.33
✻4	Current input	A	0.88 / 1.06	0.88 / 1.06	1.12 / 1.38	1.20 / 1.51
Heating capacity (Nominal)	✻3	kW	5.0	6.3	8.0	9.0
	✻3	kcal / h	4,300	5,400	6,900	7,700
	✻3	Btu / h	17,100	21,500	27,300	30,700
✻4	Power input	kW	0.19 / 0.23	0.19 / 0.23	0.24 / 0.30	0.26 / 0.33
✻4	Current input	A	0.88 / 1.06	0.88 / 1.06	1.12 / 1.38	1.20 / 1.51
External finish			Galvanized			
External dimension H x W x D		mm	380 x 750 x 900	380 x 750 x 900	380 x 750 x 900	380 x 1,000 x 900
		in.	15 x 29-9/16 x 35-7/16	15 x 29-9/16 x 35-7/16	15 x 29-9/16 x 35-7/16	15 x 39-3/8 x 35-7/16
Net weight		kg (lb)	44 (98)	45 (100)	45 (100)	50 (111)
Heat exchanger			Cross fin (Aluminum fin and copper tube)			
FAN	Type x Quantity		Sirocco fan x 1	Sirocco fan x 1	Sirocco fan x 1	Sirocco fan x 1
	External static press. (220V)	Pa	<50> - 100 - <200>	<50> - 100 - <200>	<50> - 100 - <200>	<50> - 100 - <200>
		mmH_2O	<5.1> - 10.2 - <20.4>	<5.1> - 10.2 - <20.4>	<5.1> - 10.2 - <20.4>	<5.1> - 10.2 - <20.4>
	(230, 240V)	Pa	<100> - 150 - <200>	<100> - 150 - <200>	<100> - 150 - <200>	<100> - 150 - <200>
	✻5	mmH_2O	<10.2> - 15.3 - <20.4>	<10.2> - 15.3 - <20.4>	<10.2> - 15.3 - <20.4>	<10.2> - 15.3 - <20.4>
	Motor type		1-phase induction motor			
	Motor output	kW	0.080	0.080	0.120	0.140
	Driving mechanism		Direct-driven by motor			
	Airflow rate (Low-Mid-High)	m^3 / min	10.0 - 14.0	10.0 - 14.0	13.5 - 19.0	15.5 - 22.0
		L / s	167 - 233	167 - 233	225 - 317	258 - 367
		cfm	353 - 494	353 - 494	477 - 671	547 - 777
Sound pressure level (Low-Mid-High)		dB <A>	27 - 34 (220V)	27 - 34 (220V)	32 - 38 (220V)	32 - 39 (220V)
(measured in anechoic room)	✻4	dB <A>	31 - 37 (230, 240V)	31 - 37 (230, 240V)	36 - 41 (230, 240V)	35 - 41 (230, 240V)
Insulation material			Polystyrene foam, Polyethylene foam, Urethane foam			
Air filter			Optional long life filter (Synthetic fiber unwoven cloth filter) and filter box are recommended.			
Protection device			Fuse			
Refrigerant control device			LEV			
Connectable outdoor unit			R410A CITY MULTI			
Diameter of refrigerant pipe	Liquid (R410A)	mm (in.)	ø6.35 (ø1/4) Flare	ø6.35 (ø1/4) Flare	ø9.52 (ø3/8) Flare	ø9.52 (ø3/8) Flare
	Gas (R410A)	mm (in.)	ø12.7 (ø1/2) Flare	ø12.7 (ø1/2) Flare	ø15.88 (ø5/8) Flare	ø15.88 (ø5/8) Flare
Field drain pipe size		mm (in.)	O.D. 32mm (1-1/4)			
Drawing	External		IU-W27-5924			
	Wiring		IU-W65-3956			
	Refrigerant cycle		-			
Standard attachment	Document		Installation Manual, Instruction Book			
	Accessory		Drain hose I.D. 32mm (1-1/4) (flexible joint)			
Remark	Optional parts					
	Long life filter		PAC-KE86LAF	PAC-KE86LAF	PAC-KE86LAF	PAC-KE88LAF
	Filter box		PAC-KE63TB-F	PAC-KE63TB-F	PAC-KE63TB-F	PAC-KE80TB-F
	Drain pump		PAC-KE04DM-F	PAC-KE04DM-F	PAC-KE04DM-F	PAC-KE04DM-F
	Installation		Details on foundation work, duct work, insulation work, electrical wiring, power source switch, and other items shall be referred to the Installation Manual.			

Note :

	✻1 Nominal cooling conditions	✻2 Nominal cooling conditions	✻3 Nominal heating conditions
Indoor :	27˚CDB/19˚CWB (81˚FDB/66˚FWB)	27˚CDB/19.5˚CWB (81˚FDB/67˚FWB)	20˚CDB (68˚FDB)
Outdoor :	35˚CDB (95˚FDB)	35˚CDB (95˚FDB)	7˚CDB/6˚CWB (45˚FDB/43˚FWB)
Pipe length :	7.5 m (24-9/16 ft)	5 m (16-3/8 ft)	7.5 m (24-9/16 ft)
Level difference :	0 m (0 ft)	0 m (0 ft)	0 m (0 ft)

* Nominal conditions ✻1, ✻3 are subject to JIS B8615-1.
* Due to continuing improvement, above specification may be subject to change without notice.

✻4 The values are measured at the rated external static pressure.
✻5 The figure in < > indicates the value when external static pressure is changed.

Unit converter

kcal/h = kW x 860
Btu/h = kW x 3,412
cfm = m^3/min x 35.31
lb = kg / 0.4536

*Above specification data is subject to rounding variation.

Ref.: Spec_PEFY-P-VMH-E_1

PEFY

Model			PEFY-P80VMH-E	PEFY-P100VMH-E	PEFY-P125VMH-E	PEFY-P140VMH-E
Power source			1-phase 220-240V 50Hz/60Hz			
Cooling capacity (Nominal)	✻1	kW	9.0	11.2	14.0	16.0
	✻1	kcal / h	7,700	9,600	12,000	13,800
	✻1	Btu / h	30,700	38,200	47,800	54,600
	✻2	kcal / h	8,000	10,000	12,500	14,000
✻4	Power input	kW	0.32 / 0.40	0.48 / 0.58	0.48 / 0.58	0.48 / 0.59
✻4	Current input	A	1.47 / 1.83	2.34 / 2.66	2.34 / 2.66	2.35 / 2.70
Heating capacity (Nominal)	✻3	kW	10.0	12.5	16.0	18.0
	✻3	kcal / h	8,600	10,800	13,800	15,500
	✻3	Btu / h	34,100	42,700	54,600	61,400
✻4	Power input	kW	0.32 / 0.40	0.48 / 0.58	0.48 / 0.58	0.48 / 0.59
✻4	Current input	A	1.47 / 1.83	2.34 / 2.66	2.34 / 2.66	2.35 / 2.70
External finish			Galvanized			
External dimension H x W x D		mm	380 x 1,000 x 900	380 x 1,200 x 900	380 x 1,200 x 900	380 x 1,200 x 900
		in.	15 x 39-3/8 x 35-7/16	15 x 47-1/4 x 35-7/16	15 x 47-1/4 x 35-7/16	15 x 47-1/4 x 35-7/16
Net weight		kg (lb)	50 (111)	70 (155)	70 (155)	70 (155)
Heat exchanger			Cross fin (Aluminum fin and copper tube)			
FAN	Type x Quantity		Sirocco fan x 1	Sirocco fan x 2	Sirocco fan x 2	Sirocco fan x 2
	External (220V) static press.	Pa	<50> - 100 - <200>	<50> - 100 - <200>	<50> - 100 - <200>	<50> - 100 - <200>
		mmH_2O	<5.1> - 10.2 - <20.4>	<5.1> - 10.2 - <20.4>	<5.1> - 10.2 - <20.4>	<5.1> - 10.2 - <20.4>
	(230, 240V)	Pa	<100> - 150 - <200>	<100> - 150 - <200>	<100> - 150 - <200>	<100> - 150 - <200>
	✻5	mmH_2O	<10.2> - 15.3 - <20.4>	<10.2> - 15.3 - <20.4>	<10.2> - 15.3 - <20.4>	<10.2> - 15.3 - <20.4>
	Motor type		1-phase induction motor			
	Motor output	kW	0.180	0.260	0.260	0.260
	Driving mechanism		Direct-driven by motor			
	Airflow rate (Low-Mid-High)	m^3 / min	18.0 - 25.0	26.5 - 38.0	26.5 - 38.0	28.0 - 40.0
		L / s	300 - 417	442 - 633	442 - 633	467 - 667
		cfm	636 - 883	936 - 1,342	936 - 1,342	989 - 1,413
Sound pressure level (Low-Mid-High)		dB <A>	35 - 41 (220V)	34 - 42 (220V)	34 - 42 (220V)	34 - 42 (220V)
(measured in anechoic room)	✻4	dB <A>	38 - 43 (230, 240V)	38 - 44 (230, 240V)	38 - 44 (230, 240V)	38 - 44 (230, 240V)
Insulation material			Polystyrene foam, Polyethylene foam, Urethane foam			
Air filter			Option : Synthetic fiber unwoven cloth filter (long life)			
Protection device			Fuse			
Refrigerant control device			LEV			
Connectable outdoor unit			R410A CITY MULTI			
Diameter of refrigerant pipe	Liquid (R410A)	mm (in.)	ø9.52 (ø3/8) Flare	ø9.52 (ø3/8) Flare	ø9.52 (ø3/8) Flare	ø9.52 (ø3/8) Flare
	Gas (R410A)	mm (in.)	ø15.88 (ø5/8) Flare	ø15.88 (ø5/8) Flare	ø15.88 (ø5/8) Flare	ø15.88 (ø5/8) Flare
Field drain pipe size		mm (in.)	O.D. 32mm (1-1/4)			
Drawing	External		IU-W27-5924			
	Wiring		IU-W65-3956			
	Refrigerant cycle		-			
Standard attachment	Document		Installation Manual, Instruction Book			
	Accessory		Drain hose I.D. 32mm (1-1/4) (flexible joint)			
Remark	Optional parts					
	Long life filter		PAC-KE88LAF	PAC-KE89LAF	PAC-KE89LAF	PAC-KE89LAF
	Filter box		PAC-KE80TB-F	PAC-KE140TB-F	PAC-KE140TB-F	PAC-KE140TB-F
	Drain pump		PAC-KE04DM-F	PAC-KE04DM-F	PAC-KE04DM-F	PAC-KE04DM-F
	Installation		Details on foundation work, duct work, insulation work, electrical wiring, power source switch, and other items shall be referred to the Installation Manual.			

Note :

	✻1 Nominal cooling conditions	✻2 Nominal cooling conditions	✻3 Nominal heating conditions
Indoor :	27˚CDB/19˚CWB (81˚FDB/66˚FWB)	27˚CDB/19.5˚CWB (81˚FDB/67˚FWB)	20˚CDB (68˚FDB)
Outdoor :	35˚CDB (95˚FDB)	35˚CDB (95˚FDB)	7˚CDB/6˚CWB (45˚FDB/43˚FWB)
Pipe length :	7.5 m (24-9/16 ft)	5 m (16-3/8 ft)	7.5 m (24-9/16 ft)
Level difference :	0 m (0 ft)	0 m (0 ft)	0 m (0 ft)

* Nominal conditions ✻1, ✻3 are subject to JIS B8615-1.
* Due to continuing improvement, above specification may be subject to change without notice.

✻4 The values are measured at the rated external static pressure.
✻5 The figure in < > indicates the value when external static pressure is changed.

Unit converter

kcal/h = kW x 860
Btu/h = kW x 3,412
cfm = m^3/min x 35.31
lb = kg / 0.4536

*Above specification data is subject to rounding variation.

Ref.: Spec_PEFY-P-VMH-E_2

1. SPECIFICATIONS

Model			PEFY-P200VMH-E	PEFY-P250VMH-E		
Power source			3-phase, 4-wire, 380-415V 50/60Hz			
Cooling capacity (Nominal)	✻1	kW	22.4	28.0		
	✻1	kcal / h	19,300	24,100		
	✻1	Btu / h	76,400	95,500		
	✻2	kcal / h	20,000	25,000		
✻4	Power input	kW	0.99 / 1.14	1.23 / 1.41		
✻4	Current input	A	1.62 / 1.86	2.0 / 2.3		
Heating capacity (Nominal)	✻3	kW	25.0	31.5		
	✻3	kcal / h	21,500	27,100		
	✻3	Btu / h	85,300	107,500		
✻4	Power input	kW	0.99 /1.14	1.23 / 1.41		
✻4	Current input	A	1.62 / 1.86	2.0 / 2.3		
External finish			Galvanized			
External dimension H x W x D		mm	470 X 1,250 X 1,120	470 X 1,250 X 1,120		
		in.	18-9/16 x 49-1/4 x 44-1/8	18-9/16 x 49-1/4 x 44-1/8		
Net weight		kg (lb)	100 (221)	100 (221)		
Heat exchanger			Cross fin (Aluminum fin and copper tube)			
FAN	Type x Quantity		Sirocco fan x 2	Sirocco fan x 2		
	External static press. (380V)	Pa	110- 220	110- 220		
		mmH_2O	11.2- 22.4	11.2- 22.4		
	(400, 415V) ✻5	Pa	130- 260	130- 260		
		mmH_2O	13.3- 26.5	13.3- 26.5		
	Motor type		3-phase induction motor			
	Motor output	kW	0.760	1.080		
	Driving mechanism		Direct-driven by motor			
	Airflow rate (Low-Mid-High)	m^3 / min	58	72		
		L / s	967	1,200		
		cfm	2,048	2,543		
Sound pressure level (Low-Mid-High)		dB <A>	42 / 45 (380V)	50 / 52 (220V)		
(measured in anechoic room)	✻4	dB <A>	44 / 47 (400, 415V)	52 / 54 (230, 240V)		
Insulation material			Polystyrene foam, Polyethylene foam, Urethane foam			
Air filter			Option : Synthetic fiber unwoven cloth filter (long life)			
Protection device			Fuse			
Refrigerant control device			LEV			
Connectable outdoor unit			R410A CITY MULTI			
Diameter of refrigerant pipe	Liquid (R410A)	mm (in.)	ø9.52 (ø3/8) Brazed	ø9.52 (ø3/8) Brazed		
	Gas (R410A)	mm (in.)	ø19.05 (ø3/4) Brazed	ø22.2 (ø7/8) Brazed		
Field drain pipe size		mm (in.)	O.D. 32mm (1-1/4)			
Drawing	External		IU-W27-5925			
	Wiring		IU-W65-3957			
	Refrigerant cycle		-			
Standard attachment	Document		Installation Manual, Instruction Book			
	Accessory		Drain hose I.D. 32mm (1-1/4) (flexible joint)			
Remark	Optional parts					
	Long life filter		PAC-KE85LAF	PAC-KE85LAF		
	Filter box		PAC-KE250TB-F	PAC-KE250TB-F		
	Drain pump		PAC-KE04DM-F	PAC-KE04DM-F		
	Installation		Details on foundation work, duct work, insulation work, electrical wiring, power source switch, and other items shall be referred to the Installation Manual.			

Note :

	✻1 Nominal cooling conditions	✻2 Nominal cooling conditions	✻3 Nominal heating conditions
Indoor :	27˚CDB/19˚CWB (81˚FDB/66˚FWB)	27˚CDB/19.5˚CWB (81˚FDB/67˚FWB)	20˚CDB (68˚FDB)
Outdoor :	35˚CDB (95˚FDB)	35˚CDB (95˚FDB)	7˚CDB/6˚CWB (45˚FDB/43˚FWB)
Pipe length :	7.5 m (24-9/16 ft)	5 m (16-3/8 ft)	7.5 m (24-9/16 ft)
Level difference :	0 m (0 ft)	0 m (0 ft)	0 m (0 ft)

* Nominal conditions ✻1, ✻3 are subject to JIS B8615-1.
* Due to continuing improvement, above specification may be subject to change without notice.

✻4 The values are measured at the rated external static pressure.
✻5 The figure in < > indicates the value when external static pressure is changed.

Unit converter

kcal/h = kW x 860
Btu/h = kW x 3,412
cfm = m^3/min x 35.31
lb = kg / 0.4536

*Above specification data is subject to rounding variation.

Ref.: Spec_PEFY-P-VMH-E_3

PEFY

PEFY-P20,25,32VMR-E-L/R

Drw. : IU-KB94-C854
Unit : mm

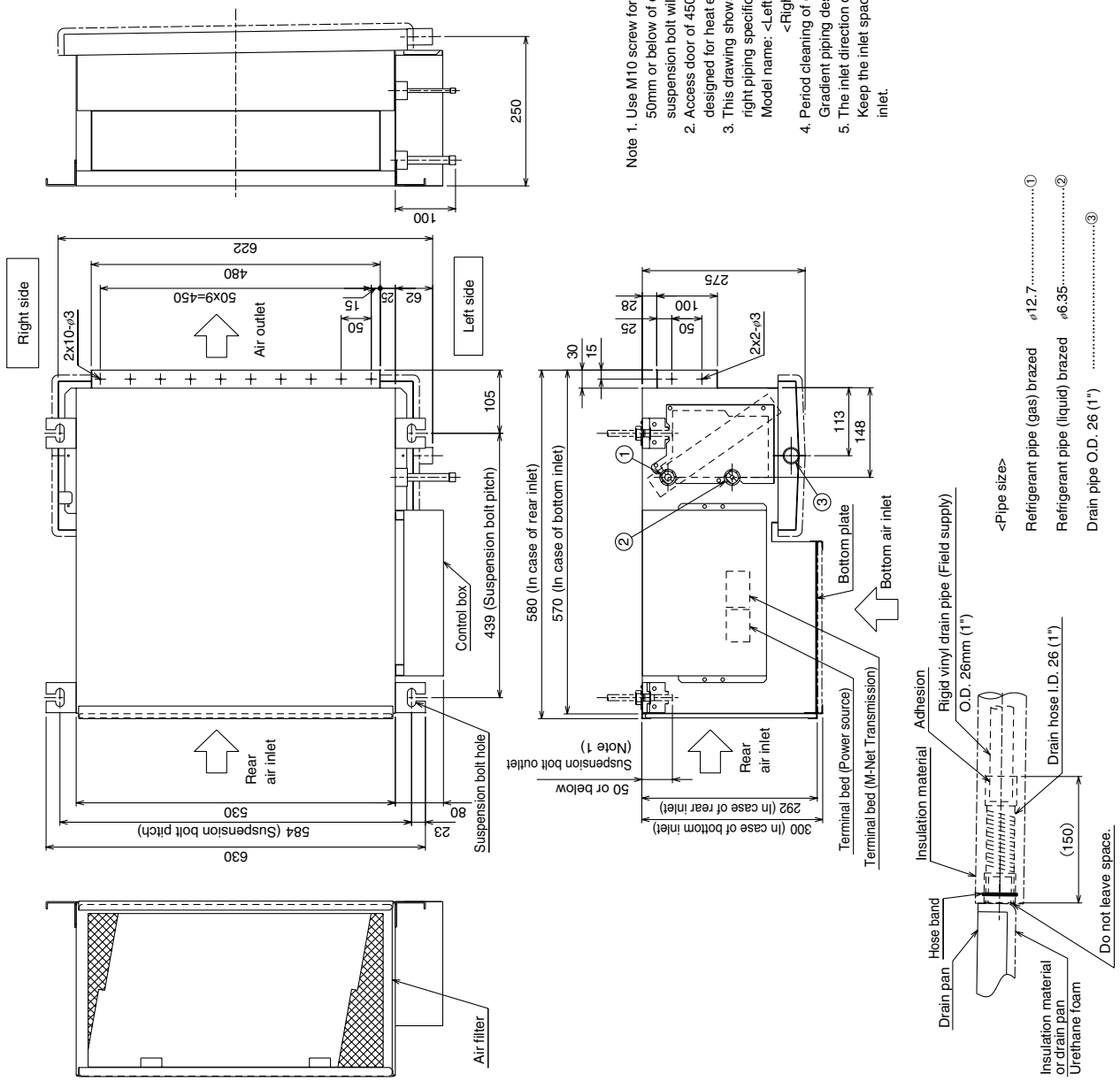

Note 1. Use M10 screw for the suspension bolt (field supply). 50mm or below of clearance between the Indoor unit top and the end of the suspension bolt will make maintenance of the Indoor heat exchanger easier.
2. Access door of 450mmx450mm at the ceiling under the drain pan should be designed for heat exchanger cleaning and maintenance.
3. This drawing shows the left piping specification. The symmetry shows the right piping specification.
Model name: <Left piping> PEFY-P20 · 25 · 32VMR-E-L
<Right piping> PEFY-P20 · 25 · 32VMR-E-R
4. Period cleaning of drain pan will prevent water overflowing. Gradient piping design is needed for water draining.
5. The inlet direction can be changed between rear inlet and bottom inlet. Keep the inlet space between the ceiling and the unit in case of bottom inlet.

2. EXTERNAL DIMENSIONS

PEFY-P15,20,25,32,40,50,63VMS1-E

Drw. : IU-KB94-G728
Unit : mm

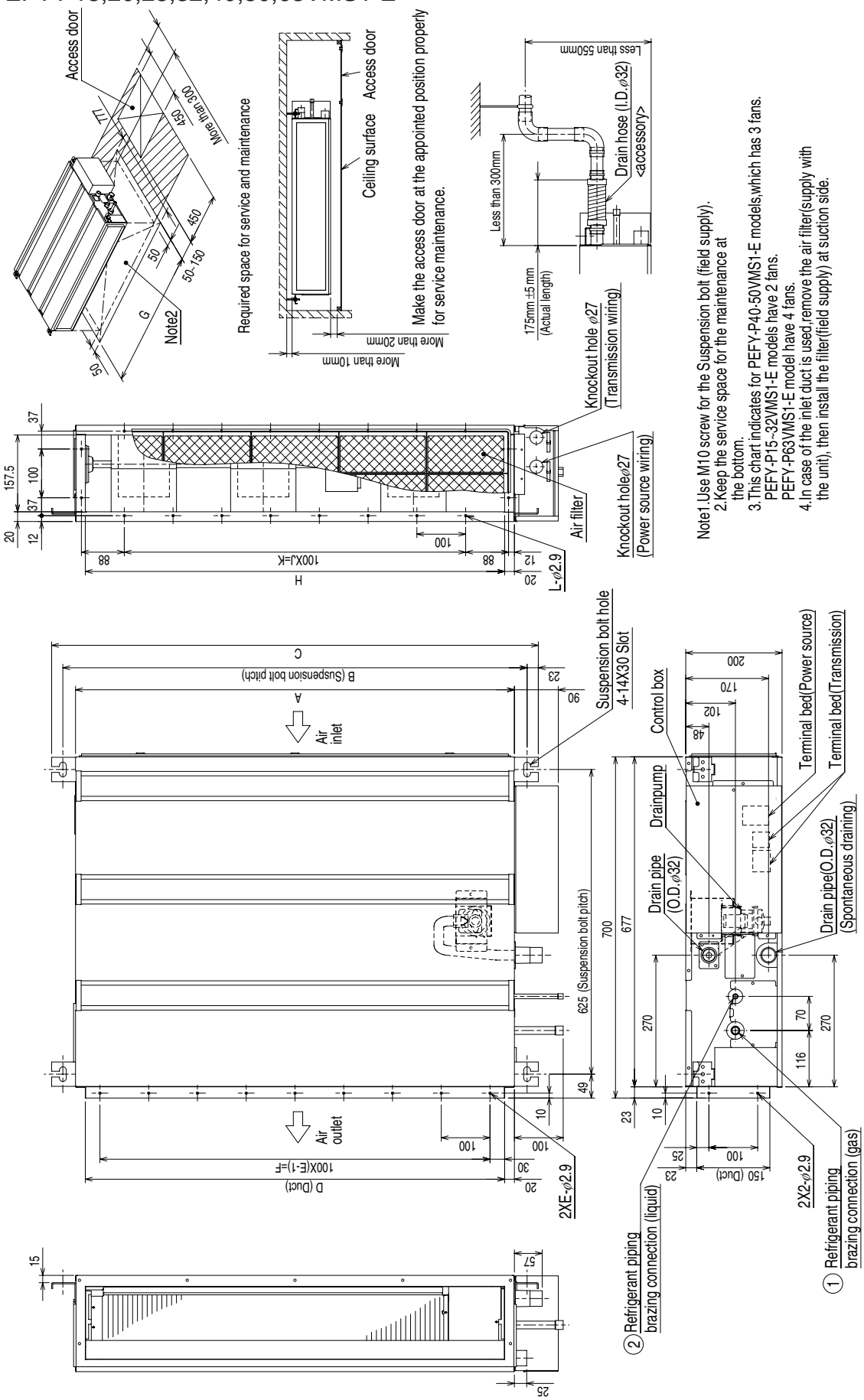

Note1.Use M10 screw for the Suspension bolt (field supply).
2.Keep the service space for the maintenance at the bottom.
3.This chart indicates for PEFY-P40-50VMS1-E models,which has 3 fans. PEFY-P15-32VMS1-E models have 2 fans. PEFY-P63VMS1-E model have 4 fans.
4.In case of the inlet duct is used,remove the air filter(supply with the unit), then install the filter(field supply) at suction side.

Model	A	B	C	D	E	F	G	H	J	K	L	①Gas pipe	②Liquid pipe
PEFY-P15,20,25,32VMS1-E	700	752	798	660	7	600	800	660	5	500	16	ø12.7	ø6.35
PEFY-P40VMS1-E	900	952	998	860	9	800	1000	860	7	700	20	ø12.7	ø6.35
PEFY-P50VMS1-E													
PEFY-P63VMS1-E	1100	1152	1198	1060	11	1000	1200	1060	9	900	24	ø15.88	ø9.52

PEFY

PEFY-P15,20,25,32,40,50,63VMS1L-E

Drw. : IU-KB94-G731
Unit : mm

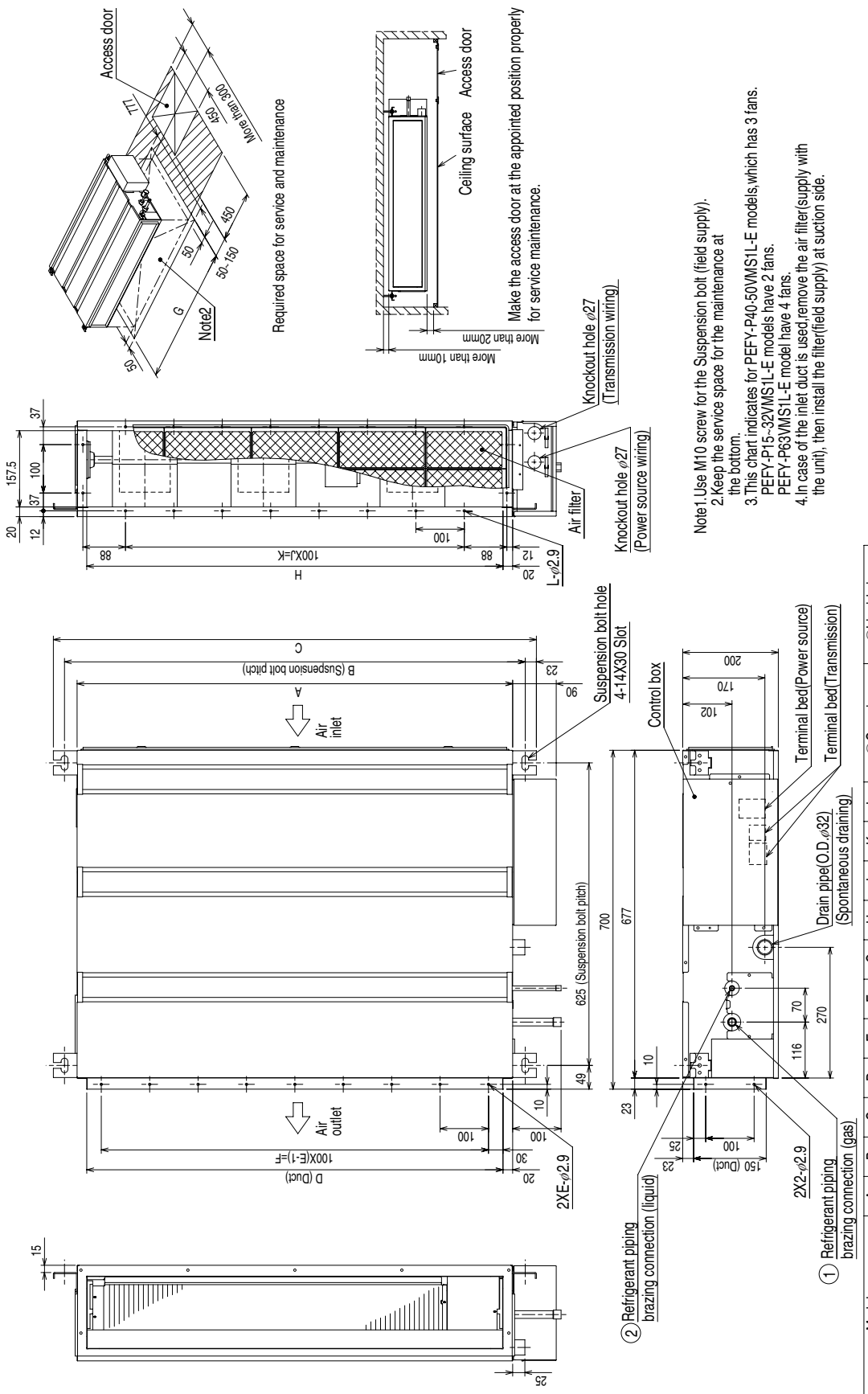

Note1.Use M10 screw for the Suspension bolt (field supply).
2.Keep the service space for the maintenance at the bottom.
3.This chart indicates for PEFY-P40-50VMS1L-E models,which has 3 fans. PEFY-P15-,-32VMS1L-E models have 2 fans. PEFY-P63VMS1L-E model have 4 fans.
4.In case of the inlet duct is used,remove the air filter(supply with the unit), then install the filter(field supply) at suction side.

Model	A	B	C	D	E	F	G	H	J	K	L	①Gas pipe	②Liquid pipe
PEFY-P15,20,25,32VMS1L-E	700	752	798	660	7	600	800	660	5	500	16	ø12.7	ø6.35
PEFY-P40VMS1L-E	900	952	998	860	9	800	1000	860	7	700	20	ø12.7	ø6.35
PEFY-P50VMS1L-E													
PEFY-P63VMS1L-E	1100	1152	1198	1060	11	1000	1200	1060	9	900	24	ø15.88	ø9.52

PEFY-P40,50,63,71,80,100,125,140VMH-E

Drw. : IU-W27-5924
Unit : mm

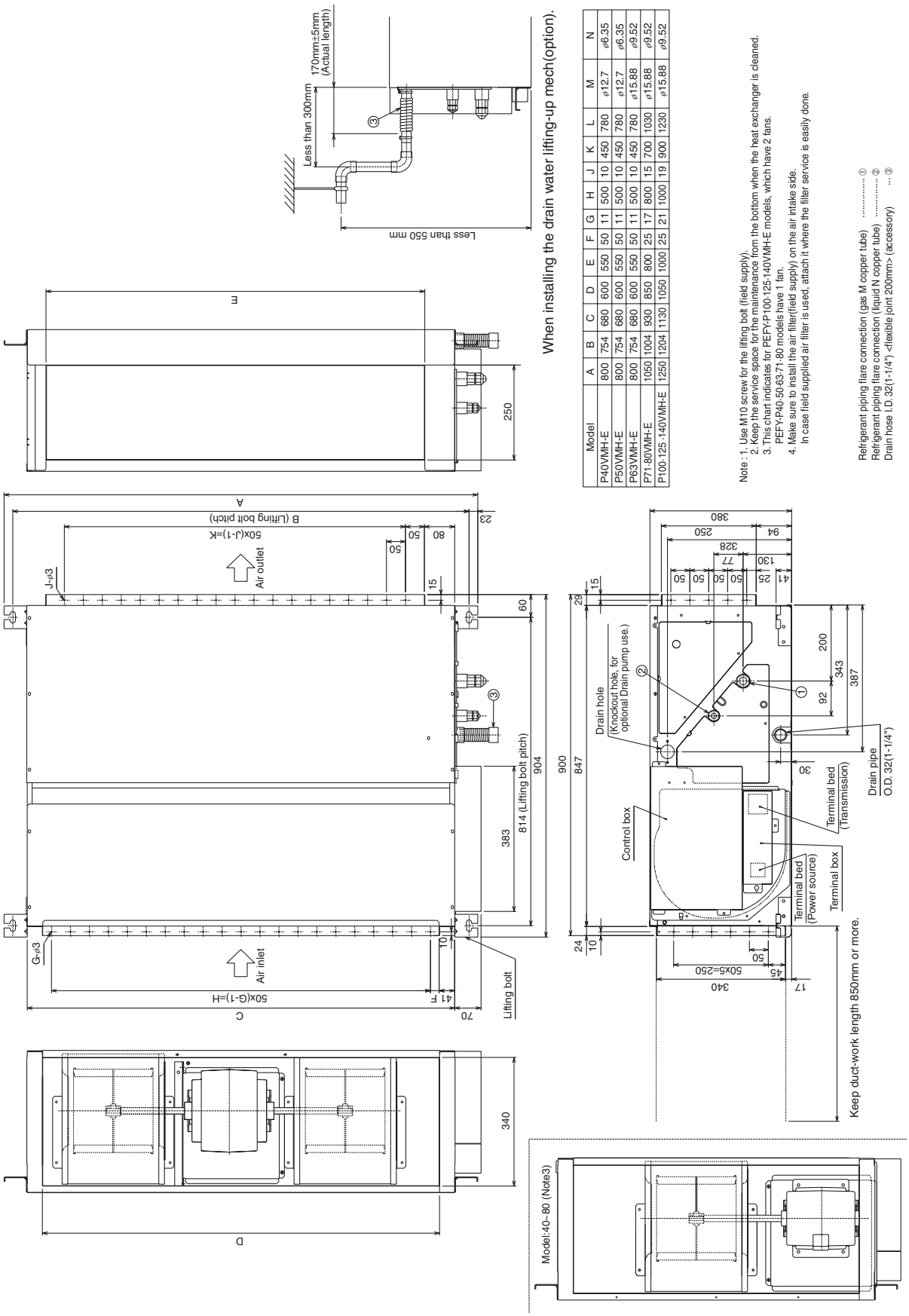

Model	A	B	C	D	E	F	G	H	J	K	L	M	N
P40VMH-E	800	754	680	600	550	50	11	500	10	450	780	ø12.7	ø6.35
P50VMH-E	800	754	680	600	550	50	11	500	10	450	780	ø12.7	ø6.35
P63VMH-E	800	754	680	600	550	50	11	500	10	450	780	ø15.88	ø9.52
P71-80VMH-E	1050	1004	930	850	800	25	17	800	15	700	1030	ø15.88	ø9.52
P100-125-140VMH-E	1250	1204	1130	1050	1000	25	21	1000	19	900	1230	ø15.88	ø9.52

Note : 1. Use M10 screw for the lifting bolt (field supply).
2. Keep the service space for the maintenance from the bottom when the heat exchanger is cleaned.
3. This chart indicates for PEFY-P100-125-140VMH-E models, which have 2 fans.
PEFY-P40-50-63-71-80 models have 1 fan.
4. Make sure to install the air filter(field supply) on the air intake side.
In case field supplied air filter is used, attach it where the filter service is easily done.

Refrigerant piping flare connection (gas M copper tube) ..... ①
Refrigerant piping flare connection (liquid N copper tube) ..... ②
Drain hose I.D. 32(1-1/4") <flexible joint 200mm> (accessory) ... ③

PEFY

PEFY-P200, 250VMH-E

Drw. : IU-W27-5925

Unit : mm

Note : 1. Use M10 screw for the lifting bolt (field supply).
2. Keep the service space for the maintenance from the bottom when the heat exchanger is cleaned.
3. Make sure to install the air filter(field supply)on the air intake side. In case field supplied air filter is used, attach it where the filter service is easily done.

Model	A	B
P200VMH-E	ø19.05	ø9.52
P250VMH-E	ø22.2	ø9.52

Refrigerant piping brazing connection (gas A copper tube) ....①
Refrigerant piping brazing connection (liquid B copper tube) ....②
Drain hose I.D. 32 (1-1/4") <flexible joint 200mm>(accessory) ....③

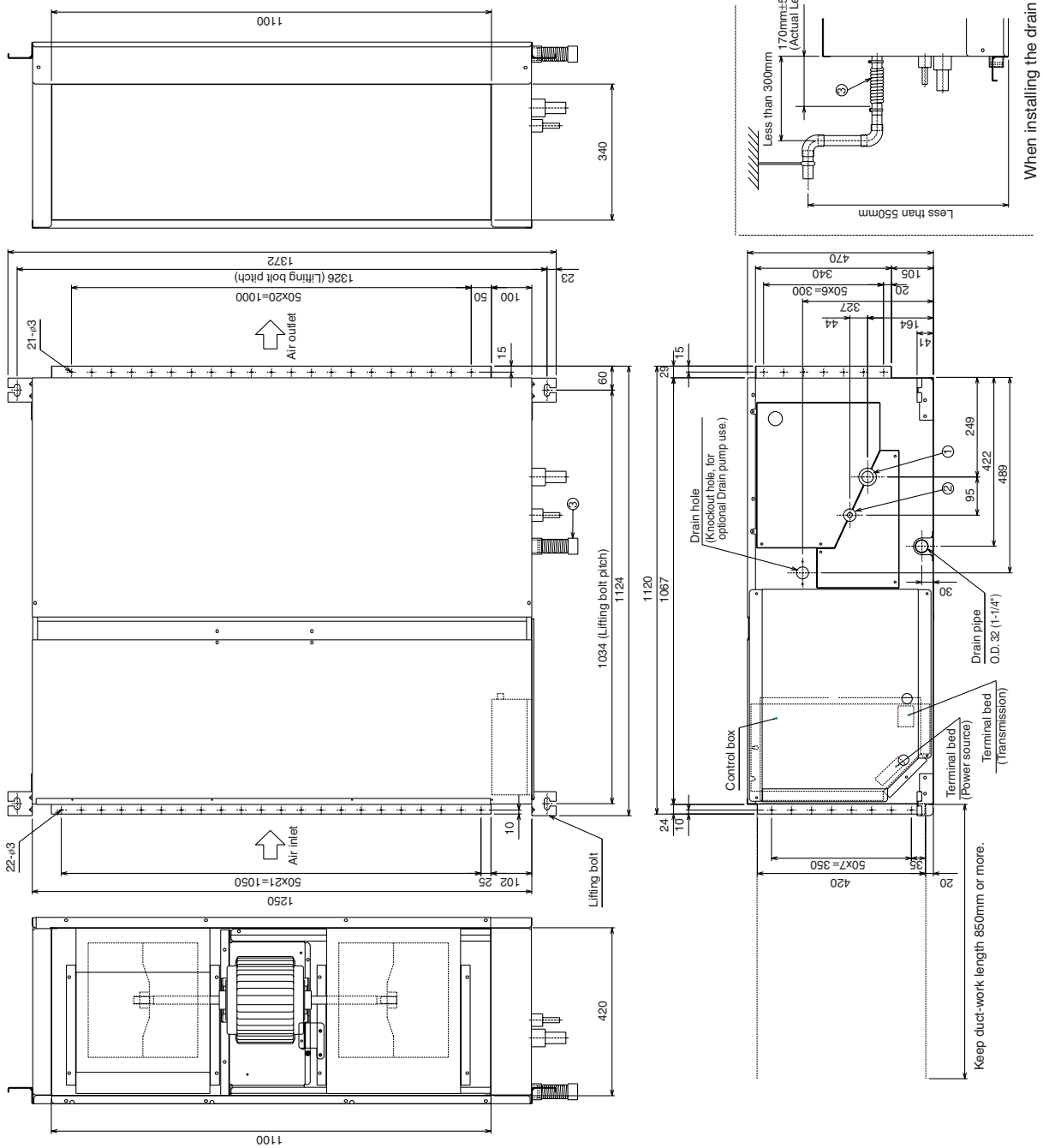

PEFY-P20, 25, 32VMR-E-L/R

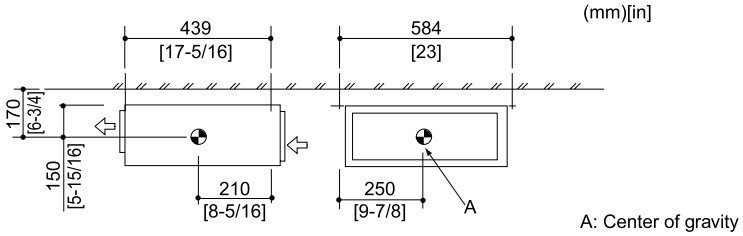

PEFY-P15,20,25,32,40,50,63VMS1(L)-E

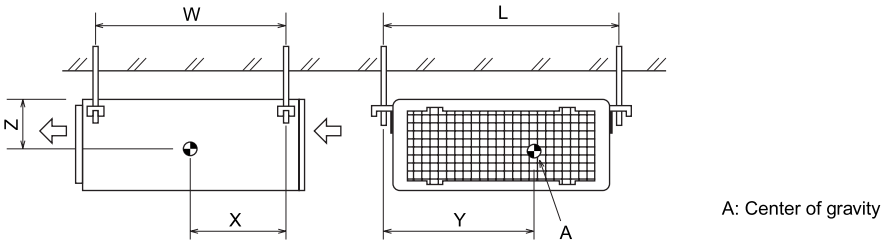

(mm)[in]

Model name	W	L	X	Y	Z
PEFY-P15VMS1(L)-E	625 [24-5/8]	752 [29-5/8]	263 [10-3/8]	338 [13-5/16]	105 [4-5/32]
PEFY-P20VMS1(L)-E	625 [24-5/8]	752 [29-5/8]	263 [10-3/8]	338 [13-5/16]	105 [4-5/32]
PEFY-P25VMS1(L)-E	625 [24-5/8]	752 [29-5/8]	263 [10-3/8]	338 [13-5/16]	105 [4-5/32]
PEFY-P32VMS1(L)-E	625 [24-5/8]	752 [29-5/8]	275 [10-27/32]	340 [13-13/32]	104 [4-1/8]
PEFY-P40VMS1(L)-E	625 [24-5/8]	952 [37-1/2]	280 [11-1/32]	422 [16-5/8]	104 [4-1/8]
PEFY-P50VMS1(L)-E	625 [24-5/8]	952 [37-1/2]	280 [11-1/32]	422 [16-5/8]	104 [4-1/8]
PEFY-P63VMS1(L)-E	625 [24-5/8]	1152 [45-3/8]	285 [11-1/4]	511 [20-1/8]	104 [4-1/8]

PEFY-P40,50,63,71,80,100,125,140,200,250VMH-E

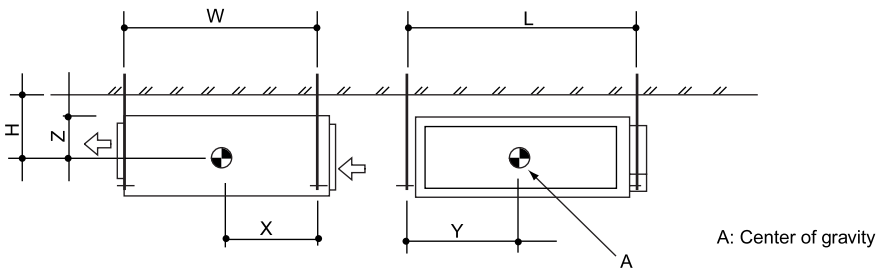

(mm)[in]

Model name	W	L	H	X	Y	Z
PEFY-P40VMH-E	814 [32-1/16]	754 [29-11/16]	210 [8-9/32]	374 [14-3/4]	440 [17-11/32]	190 [7-1/2]
PEFY-P50VMH-E	814 [32-1/16]	754 [29-11/16]	210 [8-9/32]	374 [14-3/4]	440 [17-11/32]	190 [7-1/2]
PEFY-P63VMH-E	814 [32-1/16]	754 [29-11/16]	210 [8-9/32]	374 [14-3/4]	440 [17-11/32]	190 [7-1/2]
PEFY-P71VMH-E	814 [32-1/16]	1004 [39-17/32]	210 [8-9/32]	394 [15-17/32]	584 [22-32/32]	190 [7-1/2]
PEFY-P80VMH-E	814 [32-1/16]	1004 [39-17/32]	210 [8-9/32]	394 [15-17/32]	584 [22-32/32]	190 [7-1/2]
PEFY-P100VMH-E	814 [32-1/16]	1204 [47-13/32]	210 [8-9/32]	364 [14-11/32]	649 [25-9/16]	190 [7-1/2]
PEFY-P125VMH-E	814 [32-1/16]	1204 [47-13/32]	210 [8-9/32]	364 [14-11/32]	649 [25-9/16]	190 [7-1/2]
PEFY-P140VMH-E	814 [32-1/16]	1204 [47-13/32]	210 [8-9/32]	364 [14-11/32]	649 [25-9/16]	190 [7-1/2]
PEFY-P200VMH-E	1034 [40-23/32]	1326 [52-7/32]	255 [10-1/16]	462 [18-7/32]	660 [25-32/32]	235 [9-9/32]
PEFY-P250VMH-E	1034 [40-23/32]	1326 [52-7/32]	255 [10-1/16]	462 [18-7/32]	660 [25-32/32]	235 [9-9/32]

PEFY-P20,25,32VMR-E-L/R

Drw. : IU-KB94-C858

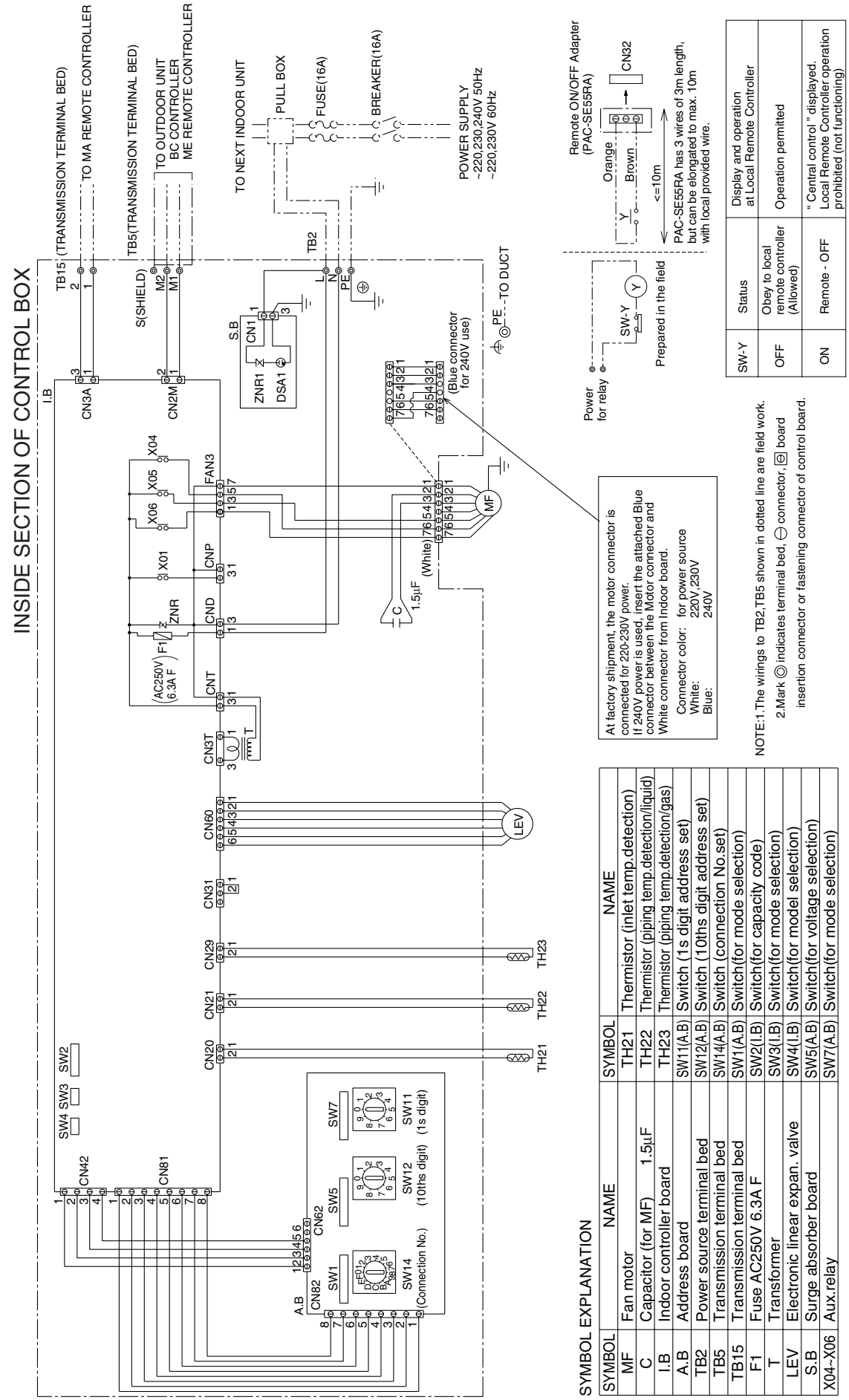

SW-Y	Status	Display and operation at Local Remote Controller
OFF	Obey to local remote controller (Allowed)	Operation permitted
ON	Remote - OFF	" Central control " displayed. Local Remote Controller operation prohibited (not functioning)

Y: Aux. relay (Load >= 12VDC 1mA)

SYMBOL EXPLANATION

SYMBOL	NAME
MF	Fan motor
C	Capacitor (for MF) 1.5μF
I.B	Indoor controller board
A.B	Address board
TB2	Power source terminal bed
TB5	Transmission terminal bed
TB15	Transmission terminal bed
F1	Fuse AC250V 6.3A F
T	Transformer
LEV	Electronic linear expan. valve
S.B	Surge absorber board
X04~X06	Aux.relay

SYMBOL	NAME
TH21	Thermistor (inlet temp.detection)
TH22	Thermistor (piping temp.detection/liquid)
TH23	Thermistor (piping temp.detection/gas)
SW11(A.B)	Switch (1s digit address set)
SW12(A.B)	Switch (10ths digit address set)
SW14(A.B)	Switch (connection No.set)
SW1(A.B)	Switch(for mode selection)
SW2(I.B)	Switch(for capacity code)
SW3(I.B)	Switch(for mode selection)
SW4(I.B)	Switch(for model selection)
SW5(A.B)	Switch(for voltage selection)
SW7(A.B)	Switch(for mode selection)

PEFY-P15,20,25,32,40,50,63VMS1(L)-E

Drw. : IU-KB94-G668

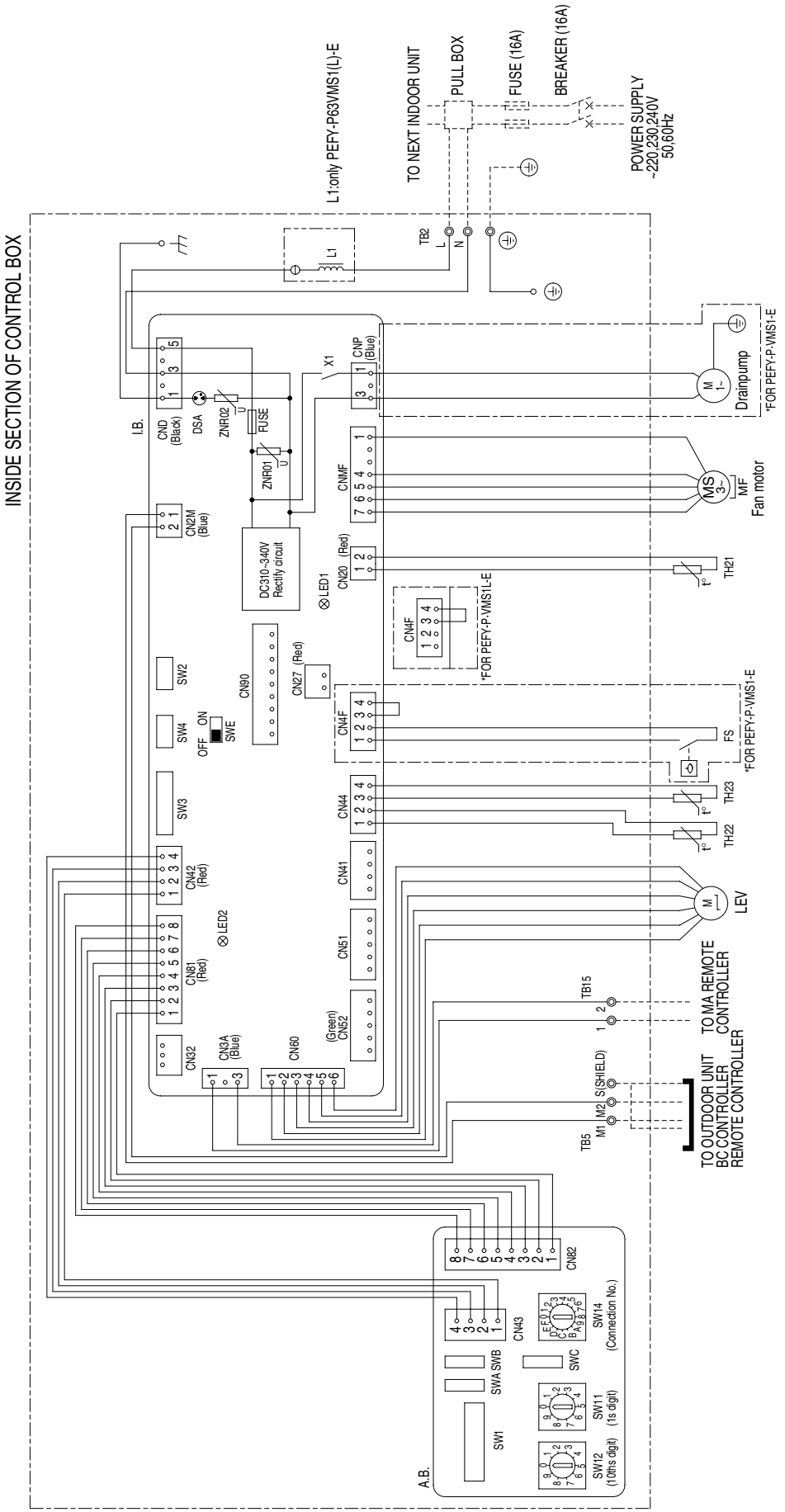

NOTE:1.The wirings to TB2,TB5,TB15 shown in dotted line are field work.
2.Mark ◎ indicates terminal bed, ⊖ connector.

SYMBOL EXPLANATION

SYMBOL	NAME	SYMBOL	NAME	SYMBOL	NAME
I.B.	Indoor controller board	CN32	Connector (Remote switch)	SW4(I.B.)	Switch (for model selection)
A.B.	Address board	CN41	Connector (HA terminal-A)	SWE(I.B.)	Connector (emergency operation)
TB2	Power source terminal bed	CN51	Connector (Centrally control)	SW1(A.B.)	Switch (for mode selection)
TB5	Transmission terminal bed	CN52	Connector (Remote indication)	SW11(A.B.)	Switch (1s digit address set)
TB15	Transmission terminal bed	CN90	Connector (Wireless)	SW12(A.B.)	Switch (10ths digit address set)
FUSE	Fuse AC250V 6.3A	FS	Float switch	SW14(A.B.)	Switch (connection No.set)
ZNR01,02	Varistor	TH21	Thermistor (inlet air temp.detection)	SWA(A.B.)	Switch (for static pressure selection)
DSA	Arrester	TH22	Thermistor (piping temp.detection/liquid)	SWB(A.B.)	Switch (for model selection)
X1	Aux. relay	TH23	Thermistor (piping temp.detection/gas)	SWC(A.B.)	Switch (for static pressure selection)
L1	AC reactor(Power factor improvement)	SW2(I.B.)	Switch (for capacity code)		
CN27	Connector (Damper)	SW3(I.B.)	Switch (for mode selection)		

PEFY

PEFY-P40,50,63,71,80,100,125,140VMH-E

Drw. : IU-W65-3956

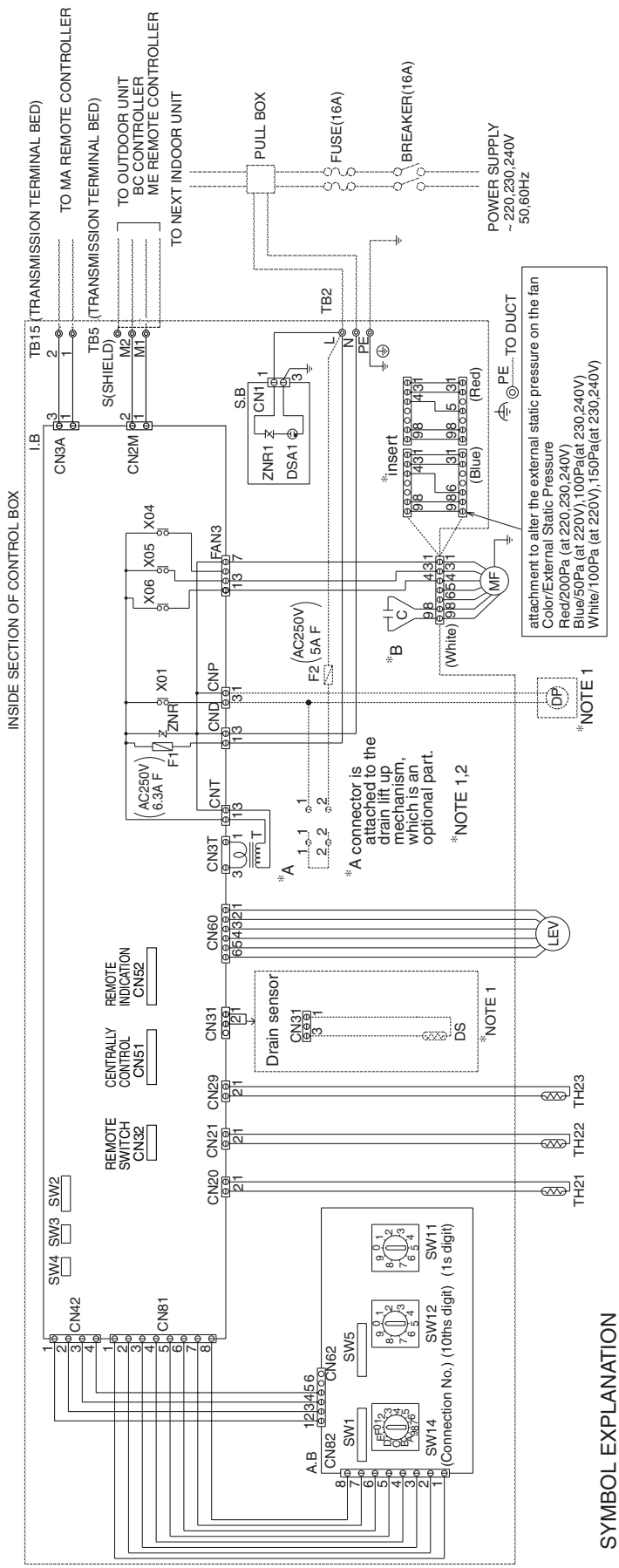

NOTE : 1.The part of the broken line indicates the circuit for optional parts.
2.*A in the chart is the connector for a drain pump test run operation.
(The Drain Pump operates continuously if the connector is inserted and the power is supplied.)
After the test run, make sure to remove the *A connector.
3.The wirings to TB2,TB5 (shown in dotted line) are field work.
4.Mark ◎ indicates terminal bed, ⊖ connector, ⊟ board insertion connector or fastening connector of control board.

*B Capacitor
MODELS 40/50 3.0μF
MODEL 63 4.0μF
MODELS 71/80 5.0μF
MODELS 100/125/140 7.0μF

SYMBOL EXPLANATION

SYMBOL	NAME	SYMBOL	NAME
MF	Fan motor	S.B	Surge absorber board
C	*B Capacitor (for MF)	TH21	Thermistor (inlet temp.detection)
I.B	Indoor controller board	TH22	Thermistor (piping temp.detection/liquid)
A.B	Address board	TH23	Thermistor (piping temp.detection/gas)
TB2	Power source terminal bed	SW11(A.B)	Switch (1s digit address set)
TB5	Transmission terminal bed	SW12(A.B)	Switch (10ths digit address set)
TB15	Transmission terminal bed	SW14(A.B)	Switch (connection No.set)
F1	Fuse AC250V 6.3A F	SW1(A.B)	Switch(for mode selection)
<F2>	Fuse AC250V 5A F	SW2(I.B)	Switch(for capacity code)
T	Transformer	SW3(I.B)	Switch(for mode selection)
<DP>	Drain Pump	SW4(I.B)	Switch(for model selection)
LEV	Electronic linear expan. valve	SW5(I.B)	Switch(for voltage selection)
<DS>	Drain sensor	X04-X06	Aux.relay

inside < > is the optional parts

PEFY-P200,250VMH-E

Drw. : IU-W65-3957

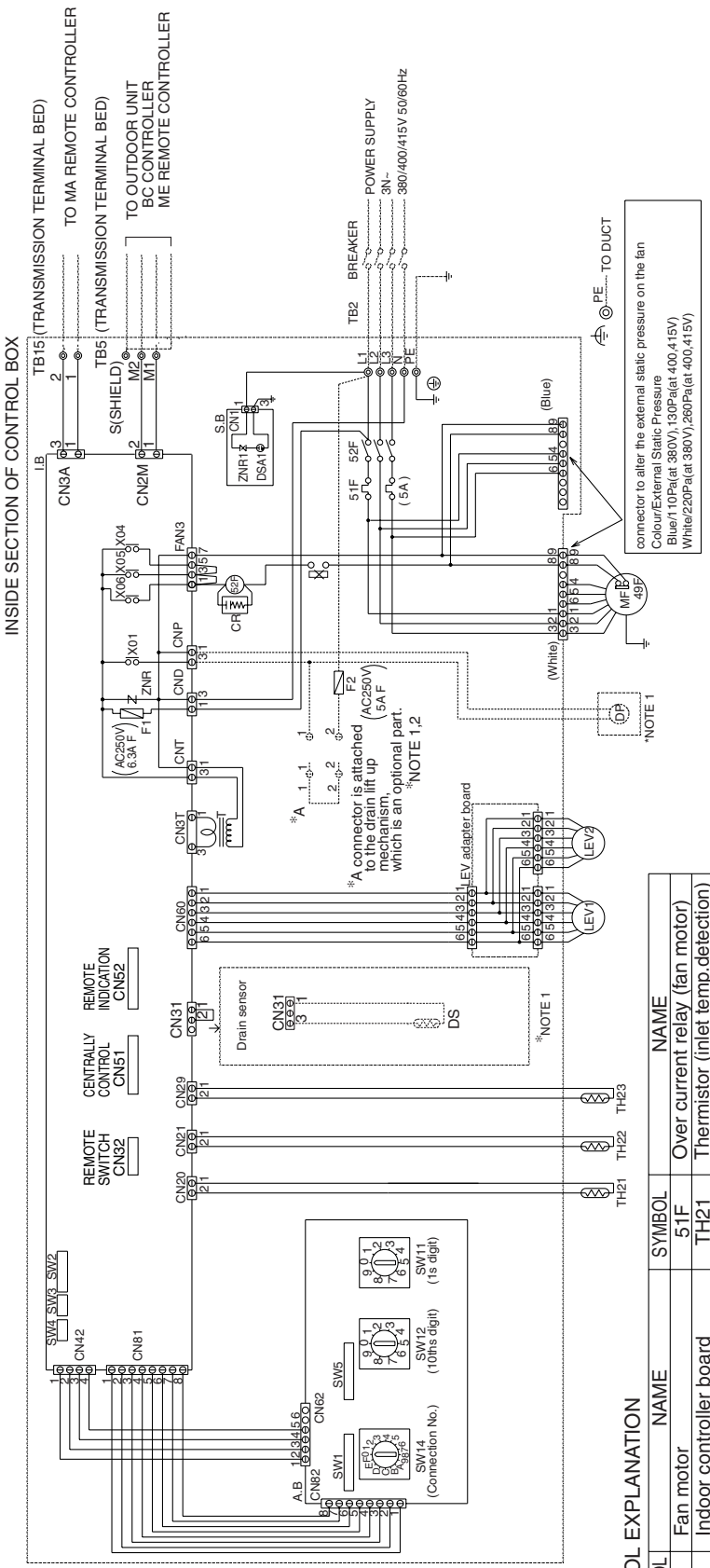

CAUTION : 1. To protect Fan motor from abnormal current, Over current relays<51F> is installed. Therefore, do not change factory set value of Over current relays.

NOTE : 1. The part of the broken line indicates the circuit for optional parts.
2. *A in the chart is the connector for a drain pump test run operation. (The Drain Pump operates continuously if the connector is inserted and the power is supplied.) After the test run, make sure to remove the *A connector.
3. The wirings to TB2, TB5 shown in dotted line are field work.
4. Mark ⓪ indicates terminal bed, ⊖ connector, ⊟ board insertion connector or fastening connector of control board.

SYMBOL EXPLANATION

SYMBOL	NAME
MF	Fan motor
I.B	Indoor controller board
A.B	Address board
TB2	Power source terminal bed
TB5	Transmission terminal bed
TB15	Transmission terminal bed
F1	Fuse AC250V 6.3A F
<F2>	Fuse AC250V 5A F
T	Transformer
<DP>	Drain Pump
LEV1,LEV2	Electronic linear expan. valve
<DS>	Drain sensor
S.B	Surge absorber board
52F	Contactor (fan motor)

SYMBOL	NAME
51F	Over current relay (fan motor)
TH21	Thermistor (inlet temp.detection)
TH22	Thermistor (piping temp.detection/liquid)
TH23	Thermistor (piping temp.detection/gas)
SW11(A.B)	Switch (1s digit address set)
SW12(A.B)	Switch (10ths digit address set)
SW14(A.B)	Switch (connection No.set)
SW1(A.B)	Switch(for mode selection)
SW2(I.B)	Switch(for capacity code)
SW3(I.B)	Switch(for mode selection)
SW4(I.B)	Switch(for model selection)
SW5(A.B)	Switch(for voltage selection)
X04-X06	Aux.relay
49F	Inner thermostat

inside < > is the optional parts

5. SOUND LEVELS

5-1. Sound levels

PEFY

PEFY-P-VMR-E-L/R,VMS1(L)-E,VMH-E

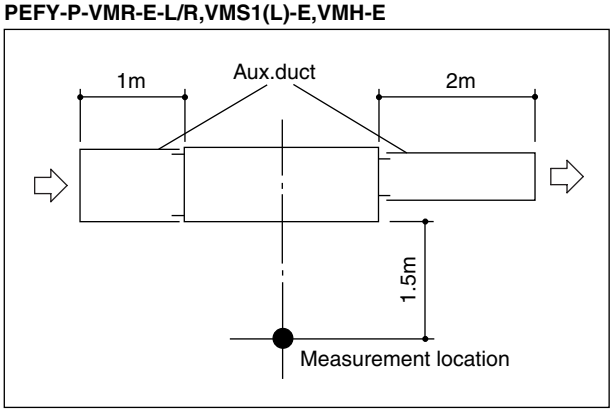

* Measured in anechoic room.

Sound level at anechoic room : Low-Mid-High

		Sound level dB (A)
PEFY-P20VMR-E-L/R	220V	20-25-30
	230V	21-26-32
	240V	22-27-30
PEFY-P25VMR-E-L/R	220V	20-25-30
	230V	21-26-32
	240V	22-27-30
PEFY-P32VMR-E-L/R	220V	20-25-33
	230V	21-26-35
	240V	22-27-33

Sound level at anechoic room : Low-Mid-High

		Sound level dB (A)			
		5Pa	15Pa	35Pa	50Pa
PEFY-P15VMS1(L)-E	220-240V	22-24-26	22-24-28	23-26-29	23-27-30
PEFY-P20VMS1(L)-E	220-240V	22-25-28	23-25-29	24-27-30	25-28-32
PEFY-P25VMS1(L)-E	220-240V	22-25-29	23-26-30	24-28-31	25-29-33
PEFY-P32VMS1(L)-E	220-240V	23-27-30	23-27-32	24-28-33	25-29-34
PEFY-P40VMS1(L)-E	220-240V	26-28-30	28-30-33	30-32-35	31-33-36
PEFY-P50VMS1(L)-E	220-240V	29-31-34	30-32-35	31-34-37	32-34-38
PEFY-P63VMS1(L)-E	220-240V	29-32-35	30-33-36	31-35-39	32-36-40

Sound level at anechoic room : Low-High

		Sound level dB (A)		
		Low*	Mid*	High*
PEFY-P40VMH-E	220V	25-30	27-34	30-40
PEFY-P50VMH-E	230, 240V	30-34	31-37	31-41
PEFY-P63VMH-E	220V	31-36	32-38	36-43
	230, 240V	35-39	36-41	38-44
PEFY-P71VMH-E	220V	30-36	32-39	35-43
	230, 240V	34-39	35-41	37-44
PEFY-P80VMH-E	220V	32-39	35-41	37-43
	230, 240V	37-41	38-43	39-45
PEFY-P100,125VMH-E	220V	32-40	34-42	36-46
PEFY-P140VMHE	230, 240V	36-42	38-44	38-47
PEFY-P200VMH-E	380V	42	–	45
	400, 415V	44	–	47
PEFY-P250VMH-E	380V	50	–	52
	400, 415V	52	–	54

* External static pressure of PEFY-P40-140VMH-E
Low : 50Pa at 220V, 100Pa at 230, 240V
Mid : 100Pa at 220V, 150Pa at 230, 240V
High : 200Pa at 220V, 200Pa at 230, 240V

* External static pressure of PEFY-P200-250VMH-E
Low : 110Pa at 380V, 130Pa at 400,415V
High : 220Pa at 380V, 260Pa at 400,415V

5. SOUND LEVELS

5-2. NC curves

PEFY-P20,25VMR-E-L/R
External static pressure : 5Pa
Power source : 220V, 50/60Hz

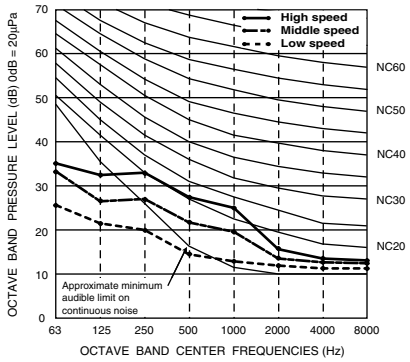

PEFY-P20,25VMR-E-L/R
External static pressure : 5Pa
Power source : 230V, 50/60Hz

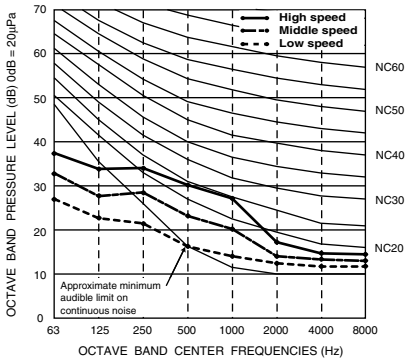

PEFY-P20,25VMR-E-L/R
External static pressure : 5Pa
Power source : 240V, 50Hz

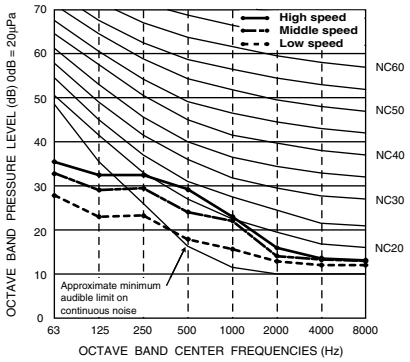

PEFY-P32VMR-E-L/R
External static pressure : 5Pa
Power source : 220V, 50/60Hz

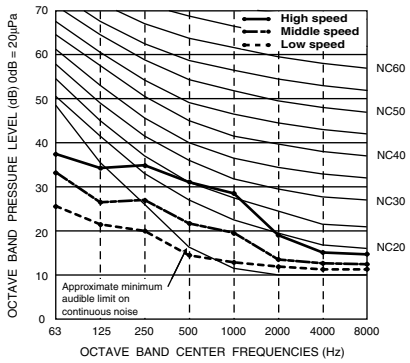

PEFY-P32VMR-E-L/R
External static pressure : 5Pa
Power source : 230V, 50/60Hz

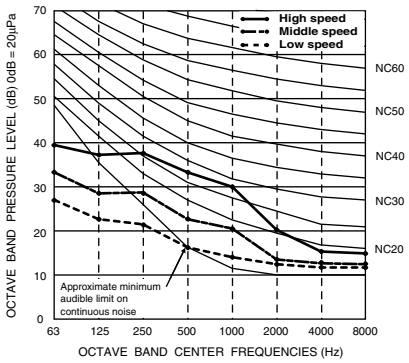

PEFY-P32VMR-E-L/R
External static pressure : 5Pa
Power source : 240V, 50Hz

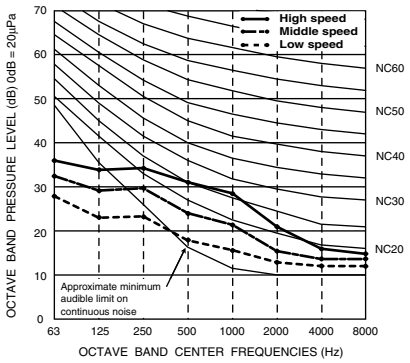

PEFY

5-2. NC curves

PEFY-P15VMS1(L)-E
External static pressure : 5Pa
Power source : 220,230,240V, 50/60Hz

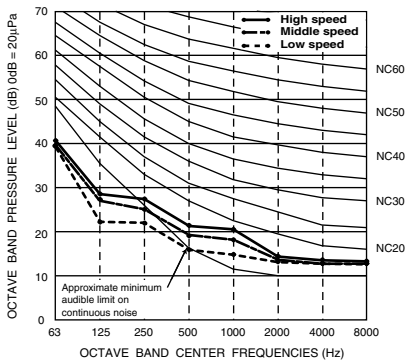

PEFY-P15VMS1(L)-E
External static pressure : 15Pa
Power source : 220,230,240V, 50/60Hz

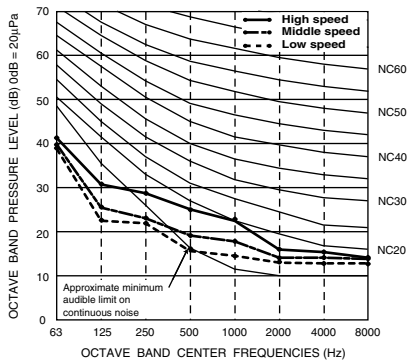

PEFY-P15VMS1(L)-E
External static pressure : 35Pa
Power source : 220,230,240V, 50/60HzHz

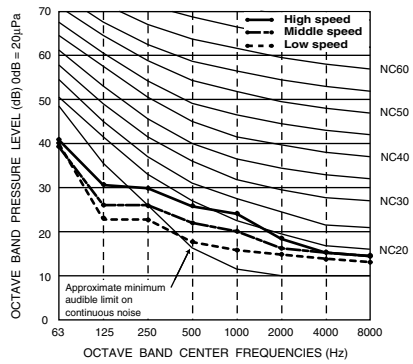

PEFY-P15VMS1(L)-E
External static pressure : 50Pa
Power source : 220,230,240V, 50/60Hz

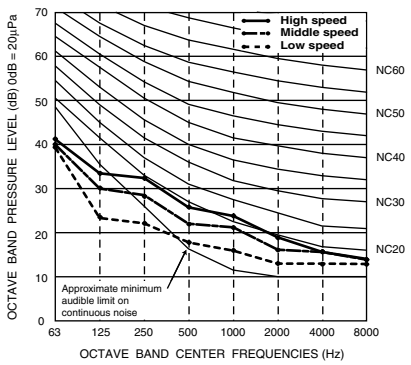

PEFY-P20VMS1(L)-E
External static pressure : 5Pa
Power source : 220,230,240V, 50/60Hz

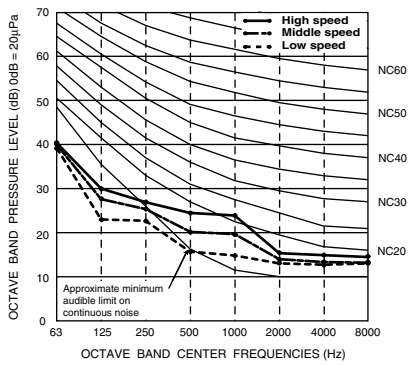

PEFY-P20VMS1(L)-E
External static pressure : 15Pa
Power source : 220,230,240V, 50/60Hz

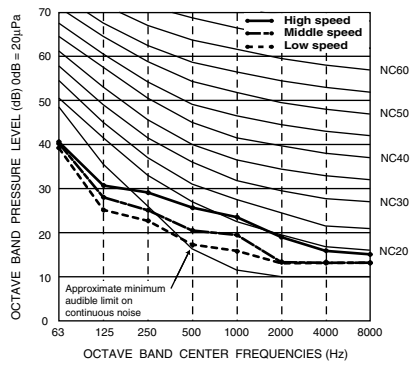

PEFY-P20VMS1(L)-E
External static pressure : 35Pa
Power source : 220,230,240V, 50/60Hz

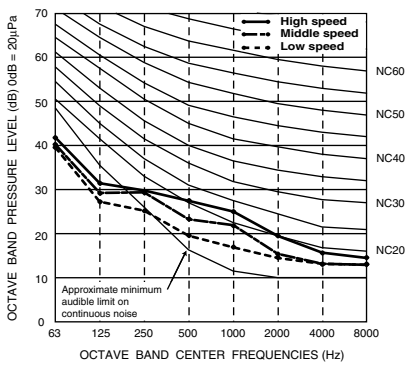

PEFY-P20VMS1(L)-E
External static pressure : 50Pa
Power source : 220,230,240V, 50/60Hz

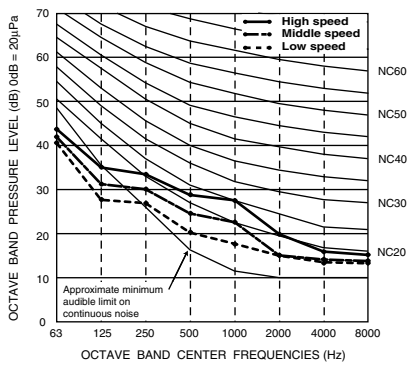

PEFY-P25VMS1(L)-E
External static pressure : 5Pa
Power source : 220,230,240V, 50/60Hz

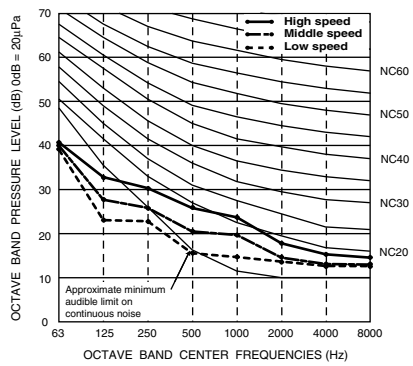

PEFY-P25VMS1(L)-E
External static pressure : 15Pa
Power source : 220,230,240V, 50/60Hz

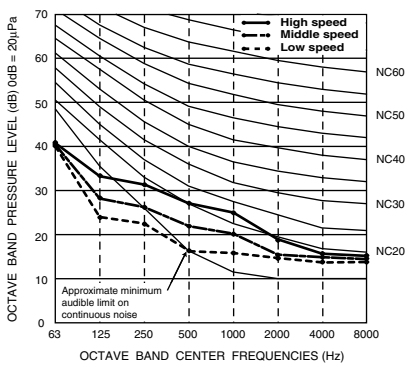

PEFY-P25VMS1(L)-E
External static pressure : 35Pa
Power source : 220,230,240V, 50/60Hz

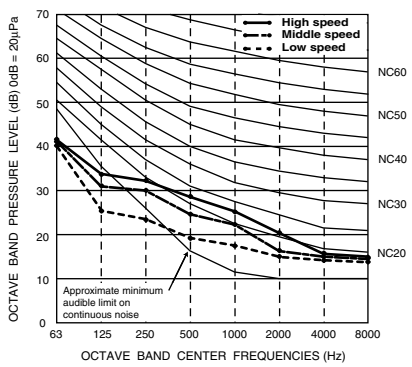

PEFY-P25VMS1(L)-E
External static pressure : 50Pa
Power source : 220,230,240V, 50/60Hz

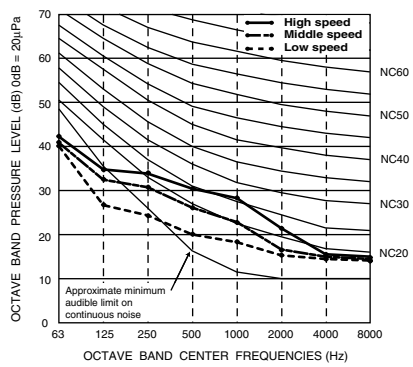

5. SOUND LEVELS

5-2. NC curves

PEFY-P32VMS1(L)-E
External static pressure : 5Pa
Power source : 220,230,240V, 50/60Hz

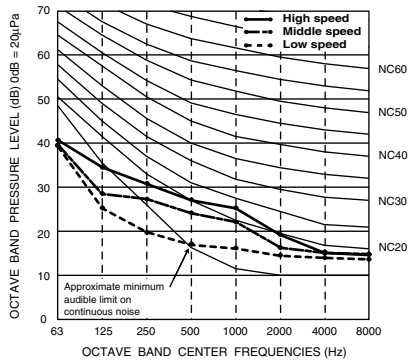

PEFY-P32VMS1(L)-E
External static pressure : 15Pa
Power source : 220,230,240V, 50/60Hz

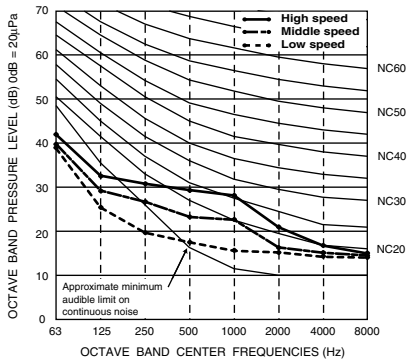

PEFY-P32VMS1(L)-E
External static pressure : 35Pa
Power source : 220,230,240V, 50/60HzHz

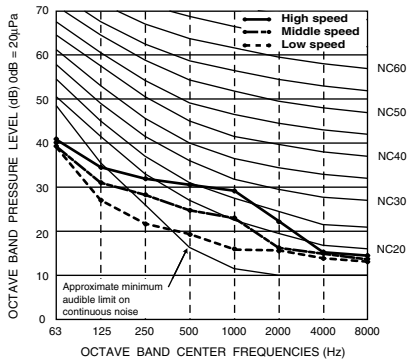

PEFY-P32VMS1(L)-E
External static pressure : 50Pa
Power source : 220,230,240V, 50/60Hz

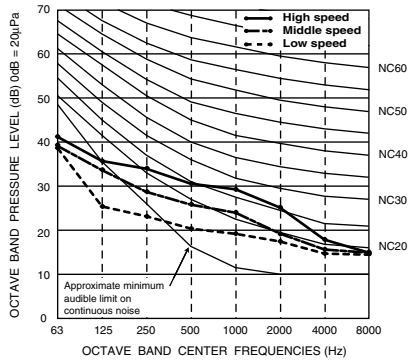

PEFY-P40VMS1(L)-E
External static pressure : 5Pa
Power source : 220,230,240V, 50/60Hz

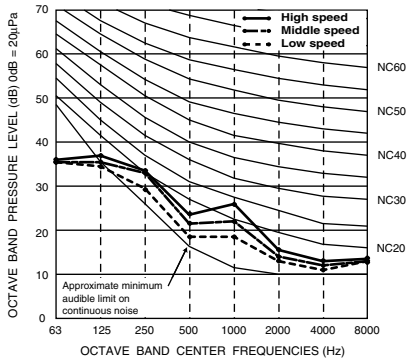

PEFY-P40VMS1(L)-E
External static pressure : 15Pa
Power source : 220,230,240V, 50/60Hz

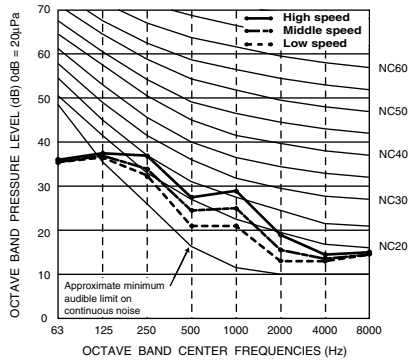

PEFY-P40VMS1(L)-E
External static pressure : 35Pa
Power source : 220,230,240V, 50/60Hz

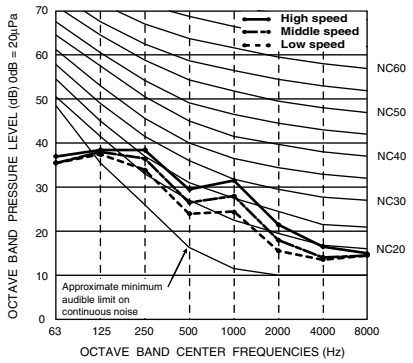

PEFY-P40VMS1(L)-E
External static pressure : 50Pa
Power source : 220,230,240V, 50/60Hz

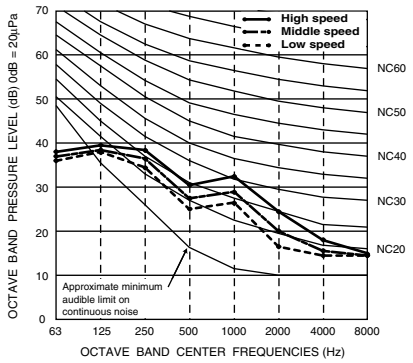

PEFY-P50VMS1(L)-E
External static pressure : 5Pa
Power source : 220,230,240V, 50/60Hz

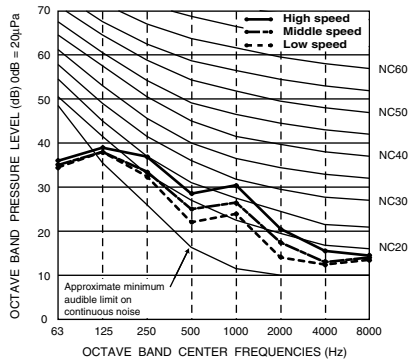

PEFY-P50VMS1(L)-E
External static pressure : 15Pa
Power source : 220,230,240V, 50/60Hz

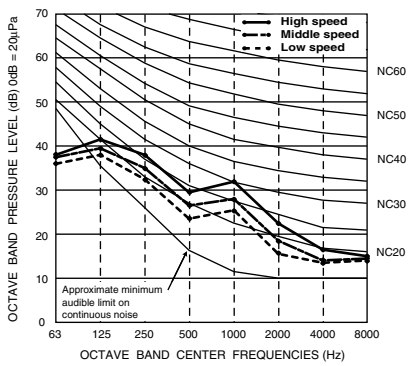

PEFY-P50VMS1(L)-E
External static pressure : 35Pa
Power source : 220,230,240V, 50/60Hz

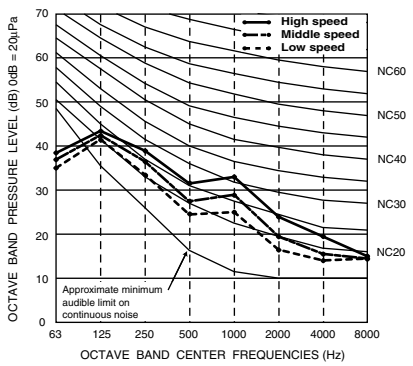

PEFY-P50VMS1(L)-E
External static pressure : 50Pa
Power source : 220,230,240V, 50/60Hz

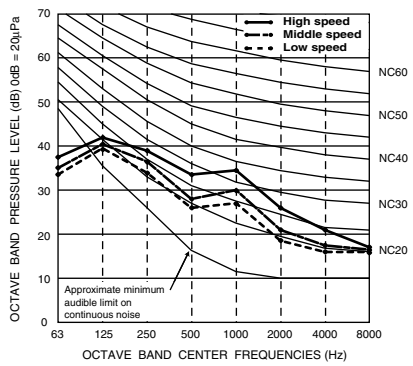

PEFY

5-2. NC curves

PEFY-P63VMS1(L)-E
External static pressure : 5Pa
Power source : 220,230,240V, 50/60Hz

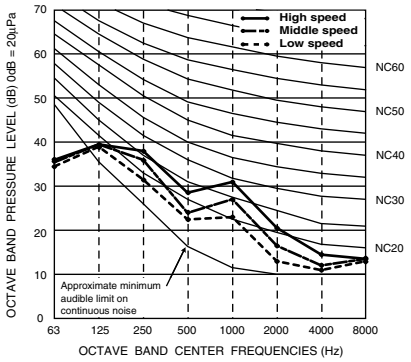

PEFY-P63VMS1(L)-E
External static pressure : 15Pa
Power source : 220,230,240V, 50/60Hz

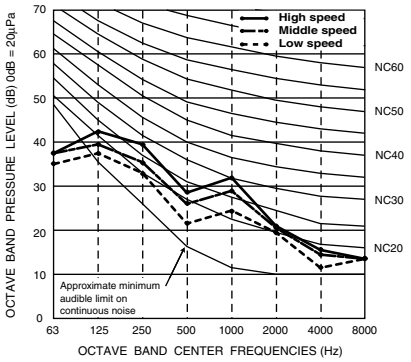

PEFY-P63VMS1(L)-E
External static pressure : 35Pa
Power source : 220,230,240V, 50/60Hz

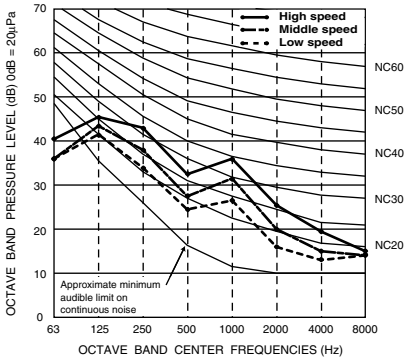

PEFY-P63VMS1(L)-E
External static pressure : 50Pa
Power source : 220,230,240V, 50/60Hz

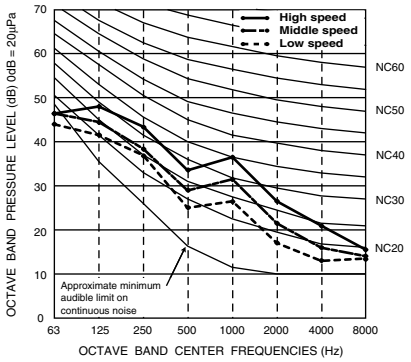

PEFY-P40,50VMH-E
External static pressure : 50Pa
Power source : 220V, 50/60Hz

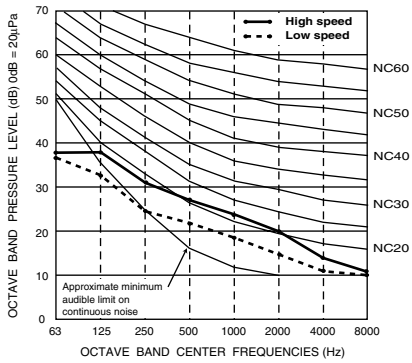

PEFY-P40,50VMH-E
External static pressure : 100Pa
Power source : 220V, 50/60Hz

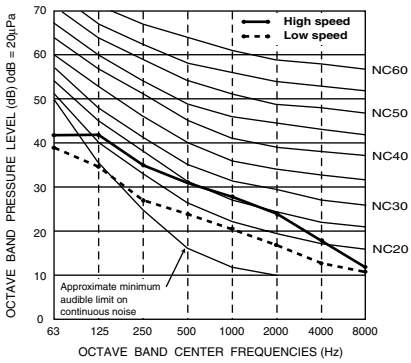

PEFY-P40,50VMH-E
External static pressure : 200Pa
Power source : 220V, 50/60Hz

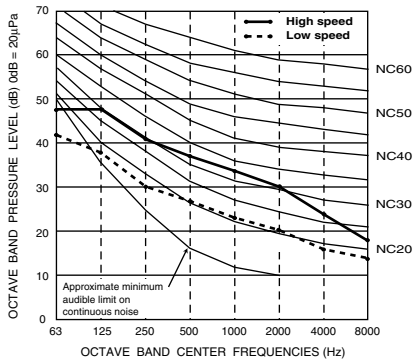

PEFY-P63VMH-E
External static pressure : 50Pa
Power source : 220V, 50/60Hz

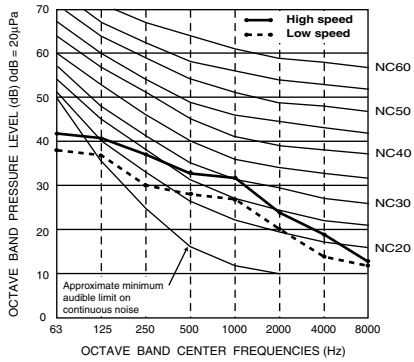

PEFY-P63VMH-E
External static pressure : 100Pa
Power source : 220V, 50/60Hz

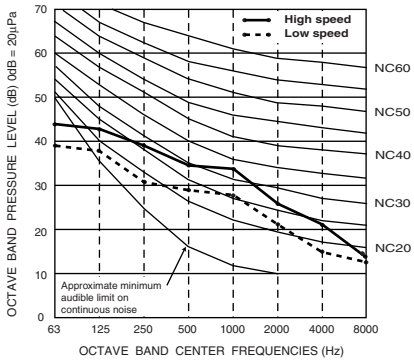

PEFY-P63VMH-E
External static pressure : 200Pa
Power source : 220V, 50/60Hz

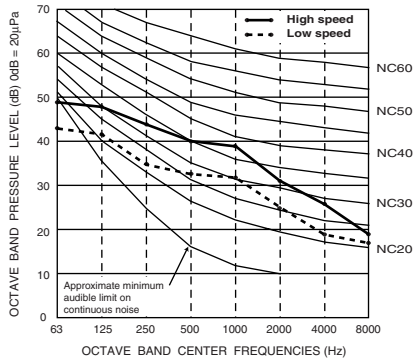

5. SOUND LEVELS

5-2. NC curves

PEFY-P71VMH-E
External static pressure : 50Pa
Power source : 220V, 50/60Hz

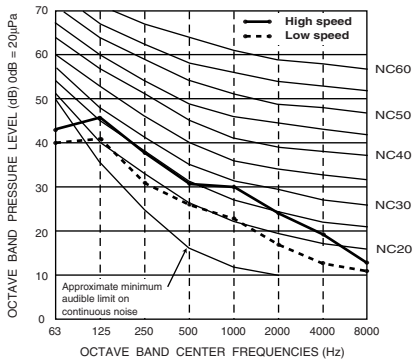

PEFY-P71VMH-E
External static pressure : 100Pa
Power source : 220V, 50/60Hz

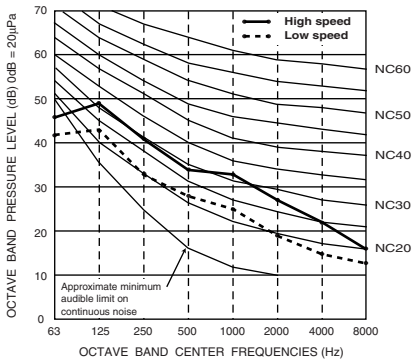

PEFY-P71VMH-E
External static pressure : 200Pa
Power source : 220V, 50/60Hz

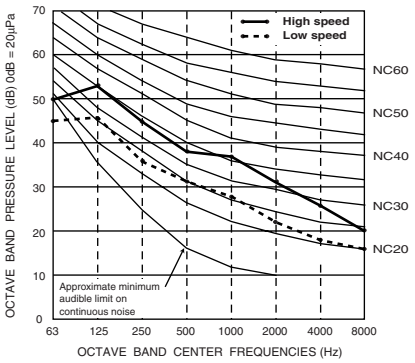

PEFY-P80VMH-E
External static pressure : 50Pa
Power source : 220V, 50/60Hz

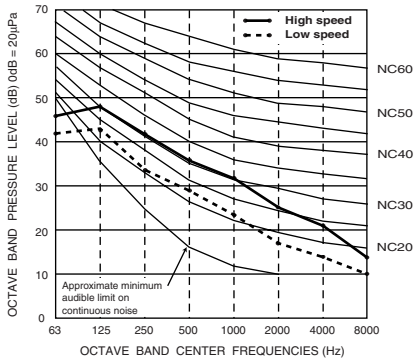

PEFY-P80VMH-E
External static pressure : 100Pa
Power source : 220V, 50/60Hz

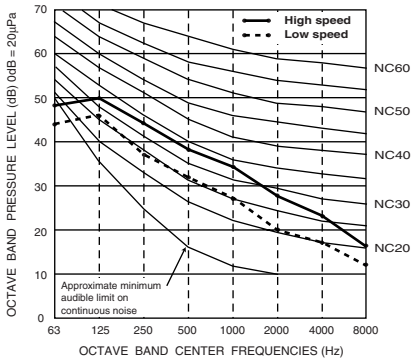

PEFY-P80VMH-E
External static pressure : 200Pa
Power source : 220V, 50/60Hz

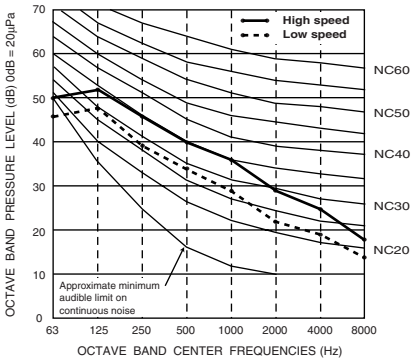

PEFY-P100,125,140VMH-E
External static pressure : 50Pa
Power source : 220V, 50/60Hz

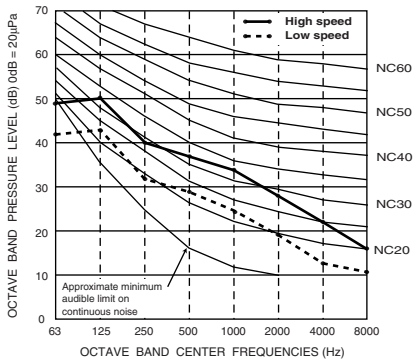

PEFY-P100,125,140VMH-E
External static pressure : 100Pa
Power source : 220V, 50/60Hz

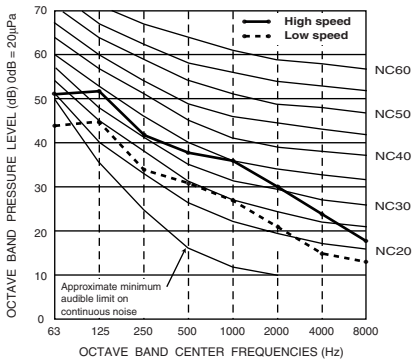

PEFY-P100,125,140VMH-E
External static pressure : 200Pa
Power source : 220V, 50/60Hz

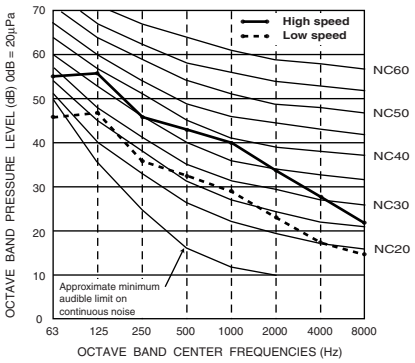

PEFY-P200VMH-E
External static pressure : 110,220Pa
Power source : 380V, 50/60Hz

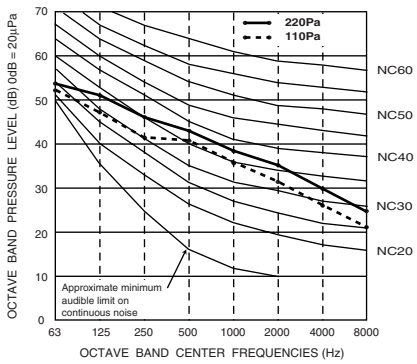

PEFY-P250VMH-E
External static pressure : 110,220Pa
Power source : 380V, 50/60Hz

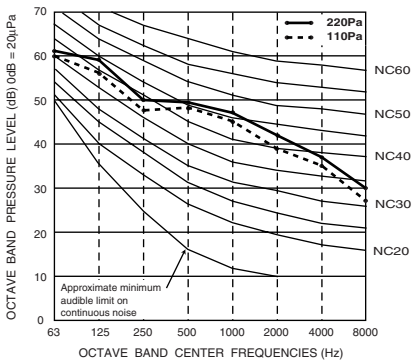

PEFY

5-2. NC curves

PEFY-P40,50VMH-E
External static pressure : 100Pa
Power source : 230,240V, 50/60Hz

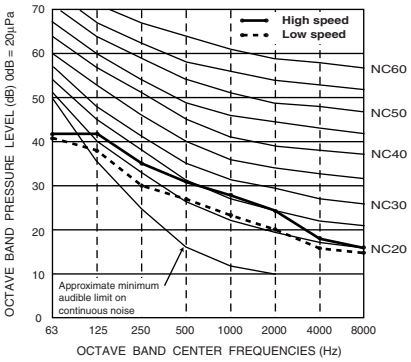

PEFY-P40,50VMH-E
External static pressure : 150Pa
Power source : 230,240V, 50/60Hz

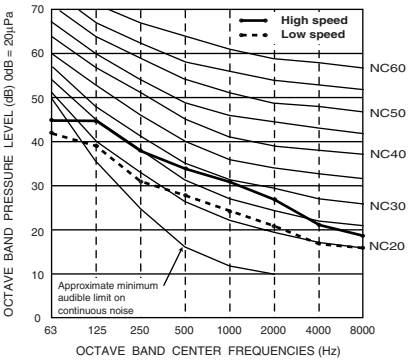

PEFY-P40,50VMH-E
External static pressure : 200Pa
Power source : 230,240V, 50/60Hz

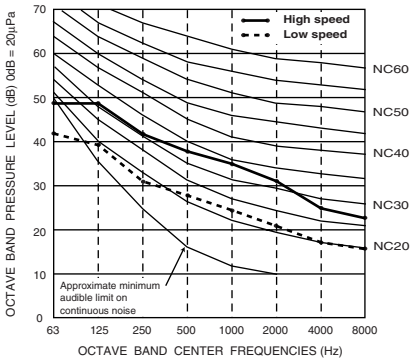

PEFY-P63VMH-E
External static pressure : 100Pa
Power source : 230,240V, 50/60Hz

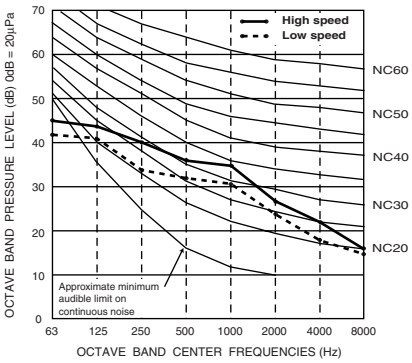

PEFY-P63VMH-E
External static pressure : 150Pa
Power source : 230,240V, 50/60Hz

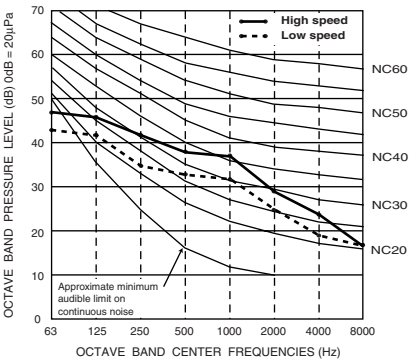

PEFY-P63VMH-E
External static pressure : 200Pa
Power source : 230,240V, 50/60Hz

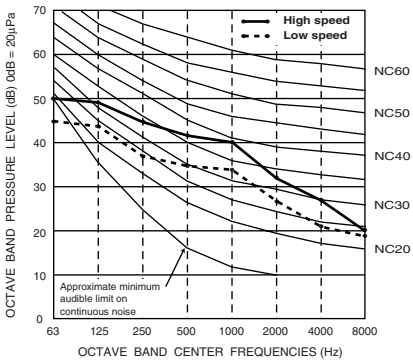

PEFY-P71VMH-E
External static pressure : 100Pa
Power source : 230,240V, 50/60Hz

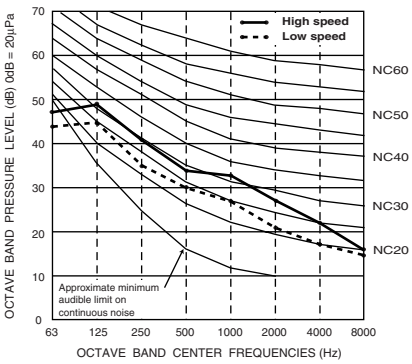

PEFY-P71VMH-E
External static pressure : 150Pa
Power source : 230,240V, 50/60Hz

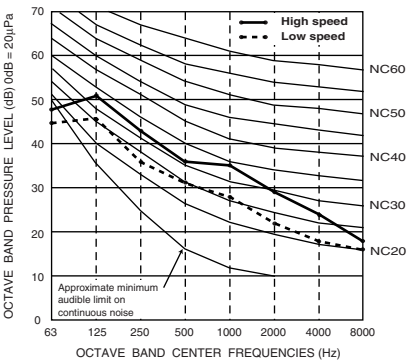

PEFY-P71VMH-E
External static pressure : 200Pa
Power source : 230,240V, 50/60Hz

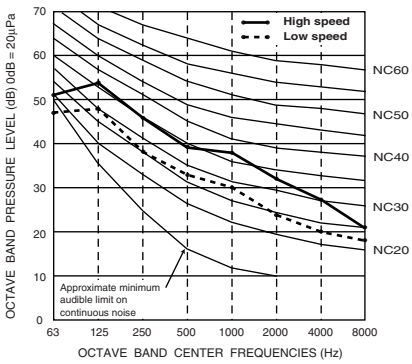

PEFY-P80VMH-E
External static pressure : 100Pa
Power source : 230,240V, 50/60Hz

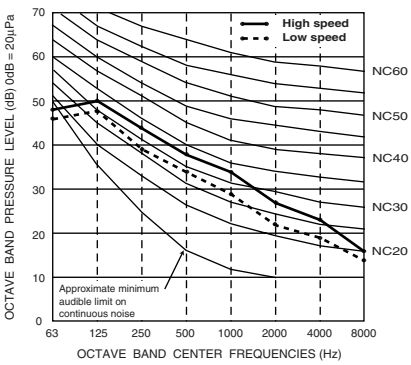

PEFY-P80VMH-E
External static pressure : 150Pa
Power source : 230,240V, 50/60Hz

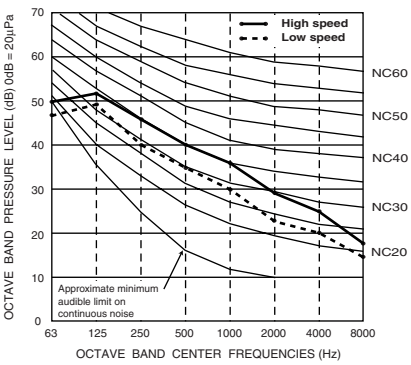

PEFY-P80VMH-E
External static pressure : 200Pa
Power source : 230,240V, 50/60Hz

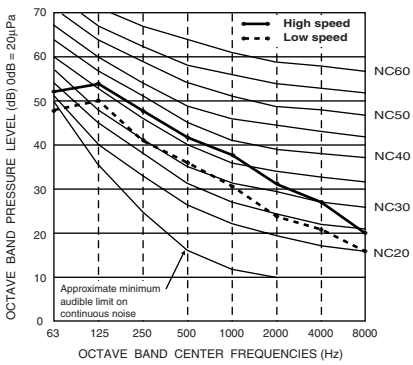

5. SOUND LEVELS

5-2. NC curves

PEFY-P100,125,140VMH-E
External static pressure : 100Pa
Power source : 230,240V, 50/60Hz

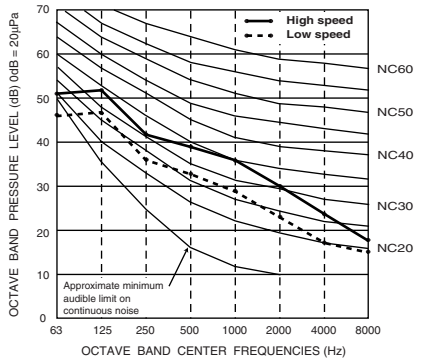

PEFY-P100,125,140VMH-E
External static pressure : 150Pa
Power source : 230,240V, 50/60Hz

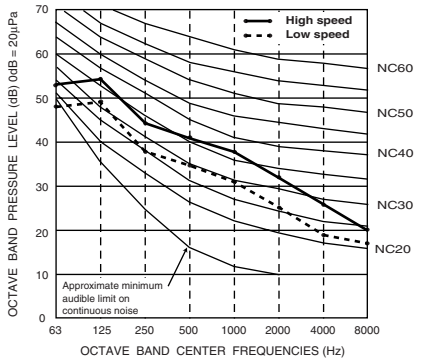

PEFY-P100,125,140VMH-E
External static pressure : 200Pa
Power source : 230,240V, 50/60Hz

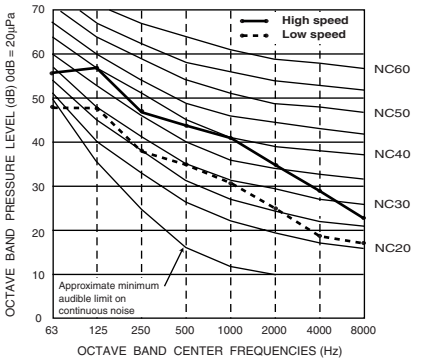

PEFY-P200VMH-E
External static pressure : 130,260Pa
Power source : 400,415V, 50/60Hz

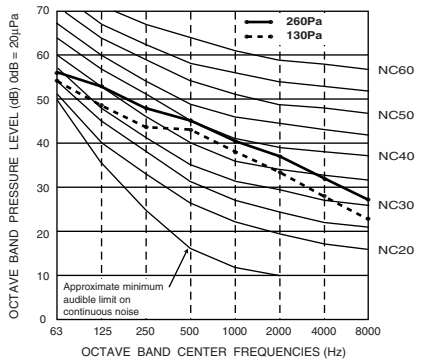

PEFY-P250VMH-E
External static pressure : 130,260Pa
Power source : 400,415V, 50/60Hz

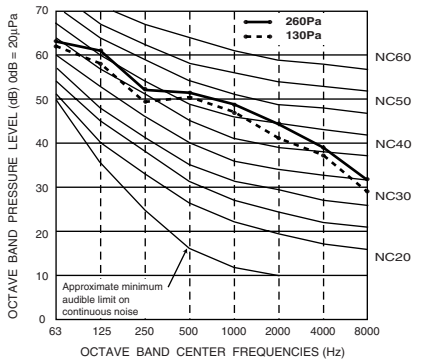

PEFY

5-3. Fan characteristics curves

PEFY-P20,25VMR-E-L/R

External static pressure : 5Pa

Power source : 220,230,240V

Suction : Back inlet

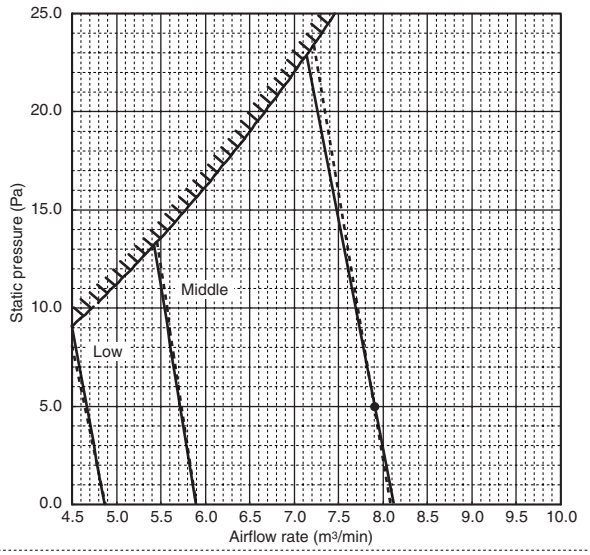

PEFY-P32VMR-E-L/R

External static pressure : 5Pa

Power source : 220,230,240V

Suction : Back inlet

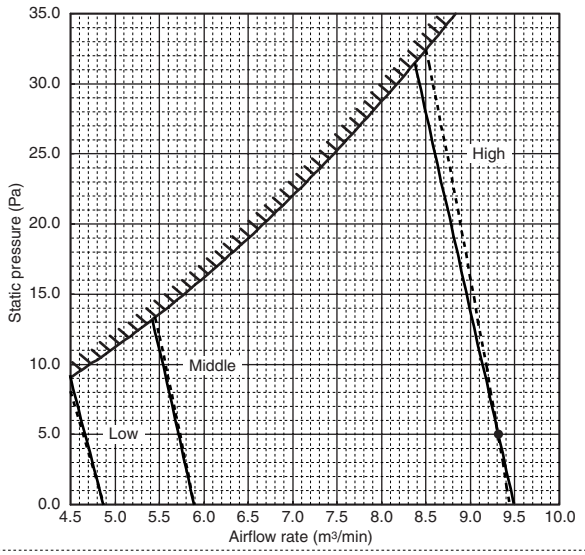

PEFY-P15VMS1(L)-E

External static pressure : 5Pa

Power source : 220,230,240V, 50/60Hz

Suction : Back inlet

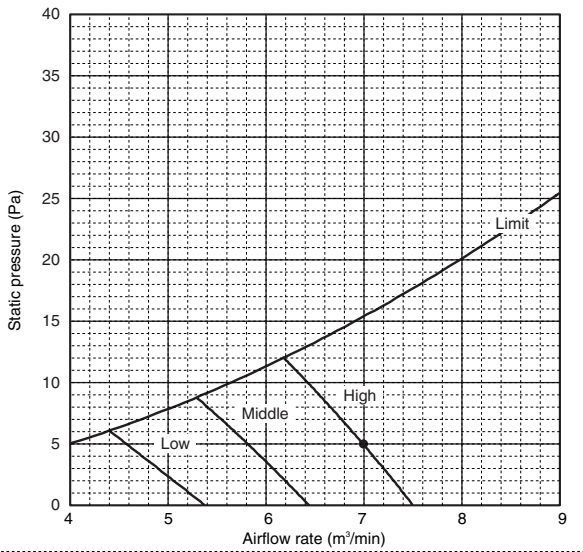

PEFY-P15VMS1(L)-E

External static pressure : 15Pa

Power source : 220,230,240V, 50/60Hz

Suction : Back inlet

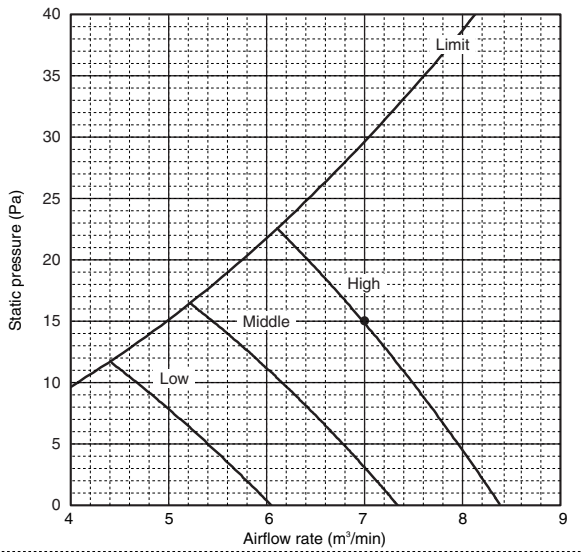

5. SOUND LEVELS

5-3. Fan characteristics curves

PEFY-P15VMS1(L)-E
External static pressure : 35Pa
Power source : 220,230,240V, 50/60Hz
Suction : Back inlet

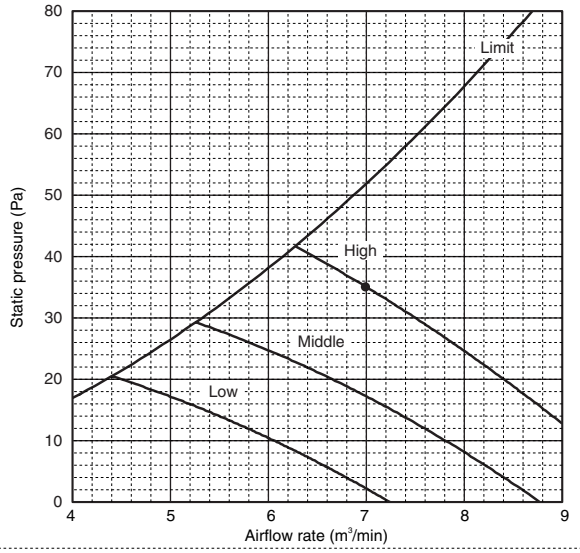

PEFY-P15VMS1(L)-E
External static pressure : 50Pa
Power source : 220,230,240V, 50/60Hz
Suction : Back inlet

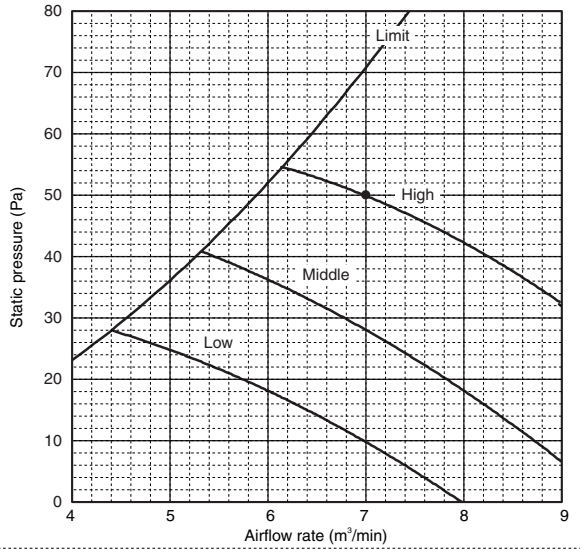

PEFY-P20VMS1(L)-E
External static pressure : 5Pa
Power source : 220,230,240V, 50/60Hz
Suction : Back inlet

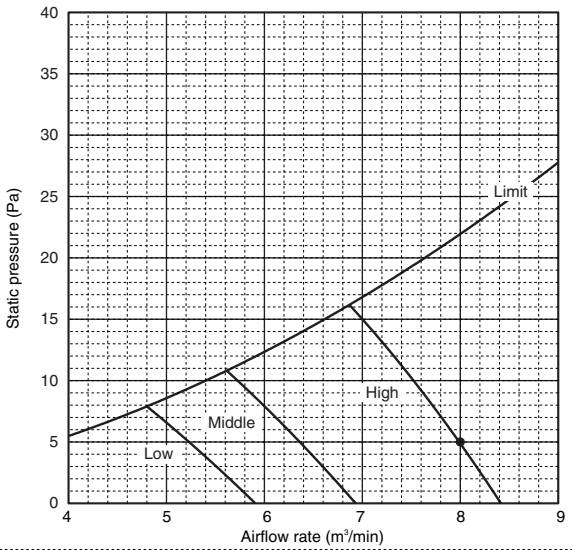

PEFY-P20VMS1(L)-E
External static pressure : 15Pa
Power source : 220,230,240V, 50/60Hz
Suction : Back inlet

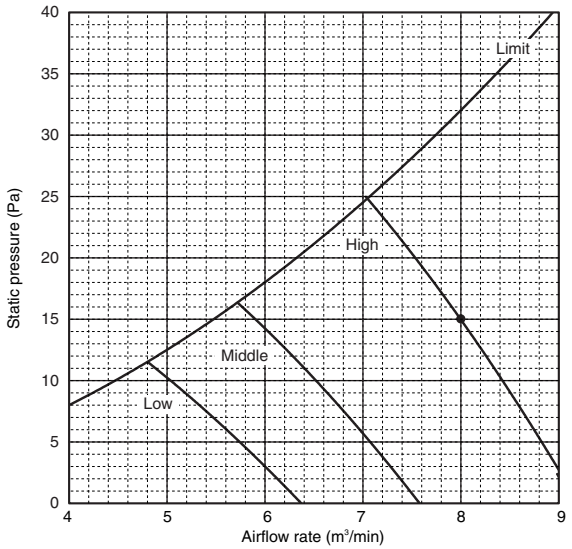

PEFY-P20VMS1(L)-E
External static pressure : 35Pa
Power source : 220,230,240V, 50/60Hz
Suction : Back inlet

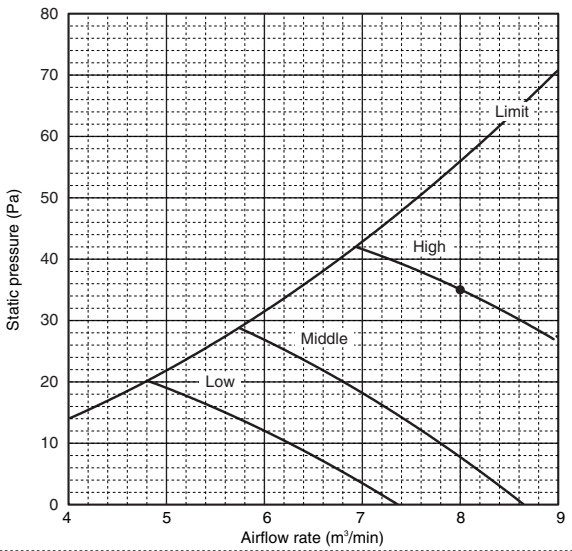

PEFY-P20VMS1(L)-E
External static pressure : 50Pa
Power source : 220,230,240V, 50/60Hz
Suction : Back inlet

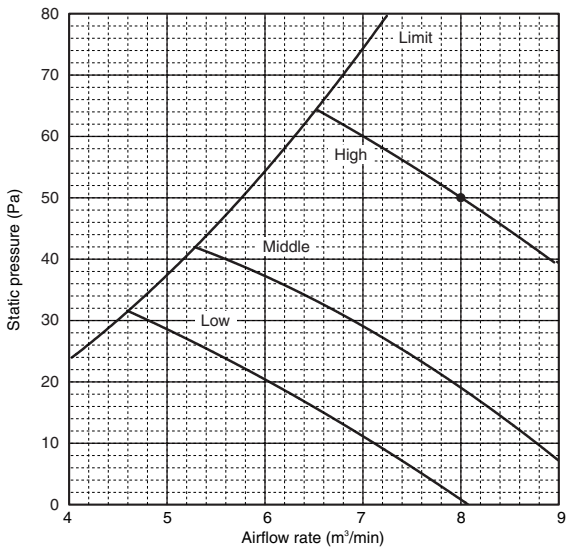

PEFY

5-3. Fan characteristics curves

PEFY-P25VMS1(L)-E
External static pressure : 5Pa
Power source : 220,230,240V, 50/60Hz
Suction : Back inlet

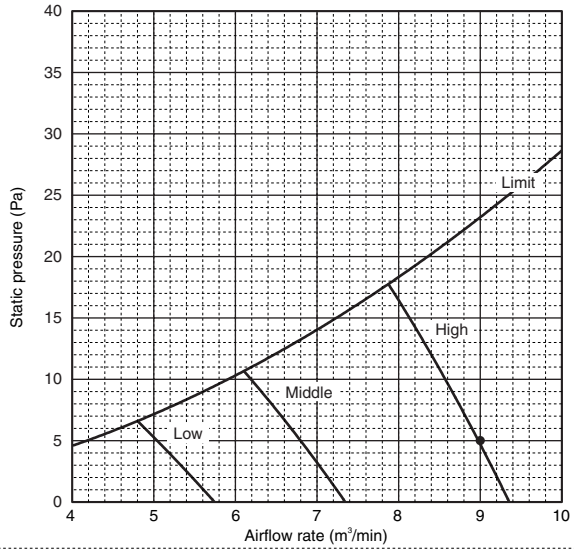

PEFY-P25VMS1(L)-E
External static pressure : 15Pa
Power source : 220,230,240V, 50/60Hz
Suction : Back inlet

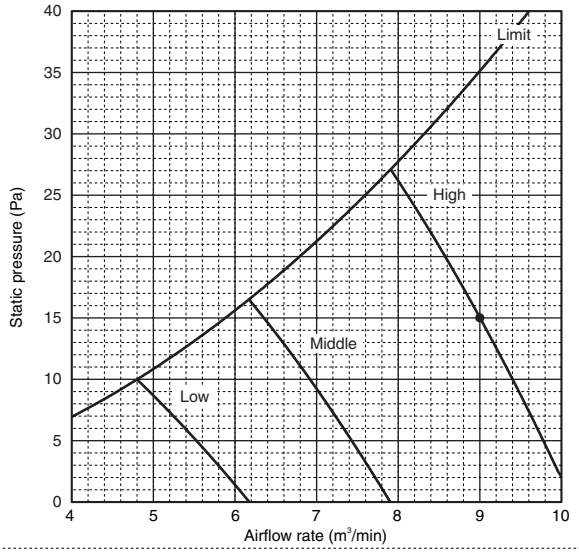

PEFY-P25VMS1(L)-E
External static pressure : 35Pa
Power source : 220,230,240V, 50/60Hz
Suction : Back inlet

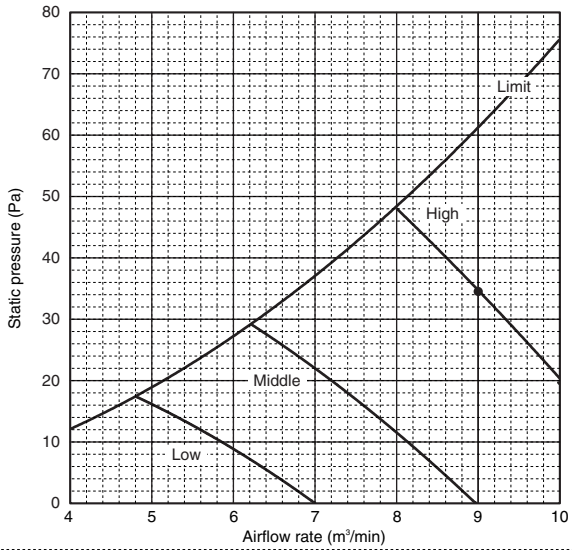

PEFY-P25VMS1(L)-E
External static pressure : 50Pa
Power source : 220,230,240V, 50/60Hz
Suction : Back inlet

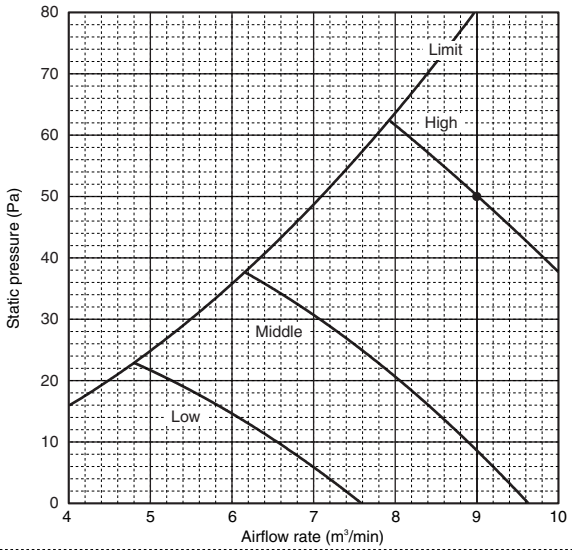

PEFY-P32VMS1(L)-E
External static pressure : 5Pa
Power source : 220,230,240V, 50/60Hz
Suction : Back inlet

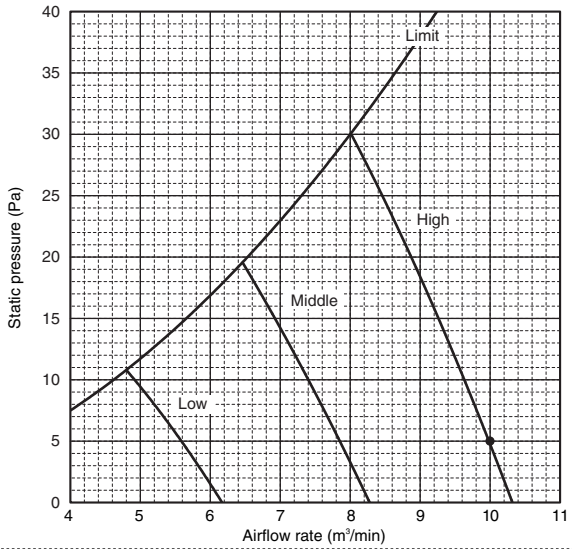

PEFY-P32VMS1(L)-E
External static pressure : 15Pa
Power source : 220,230,240V, 50/60Hz
Suction : Back inlet

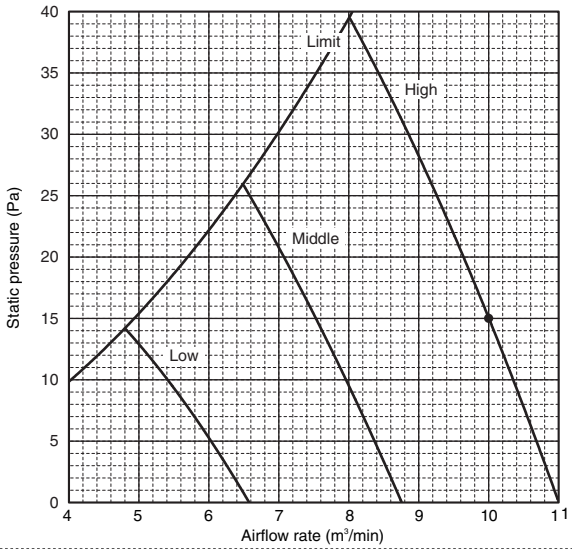

5-3. Fan characteristics curves

PEFY-P32VMS1(L)-E
External static pressure : 35Pa
Suction : Back inlet
Power source : 220,230,240V, 50/60Hz

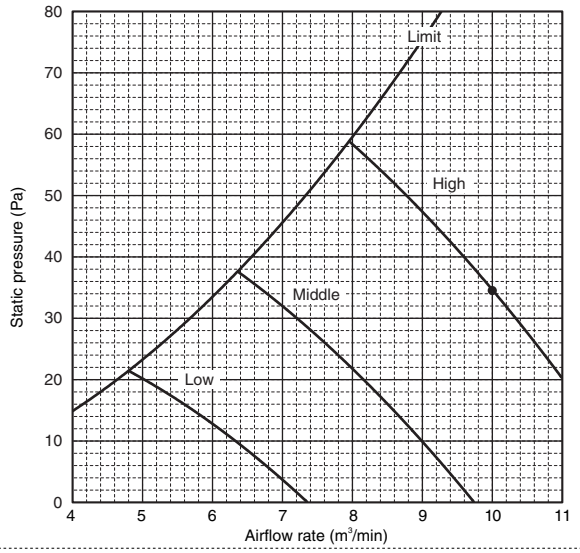

PEFY-P32VMS(L)-E
External static pressure : 50Pa
Suction : Back inlet
Power source : 220,230,240V, 50/60Hz

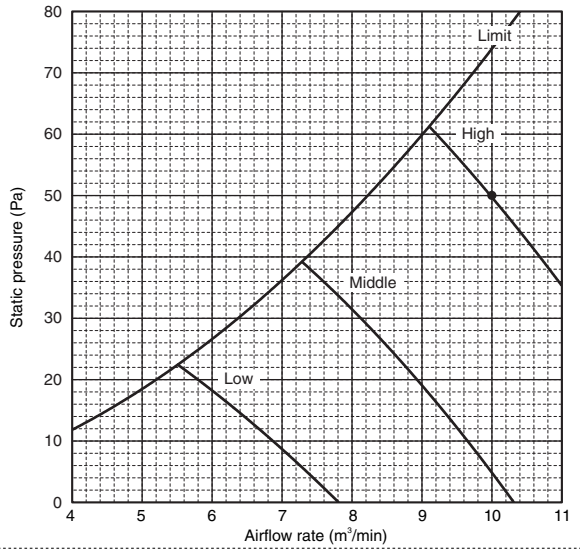

PEFY-P40VMS1(L)-E
External static pressure : 5Pa
Suction : Back inlet
Power source : 220,230,240V, 50/60Hz

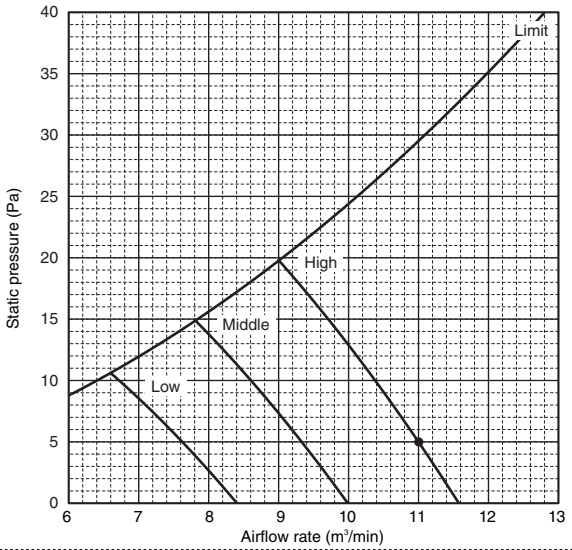

PEFY-P40VMS1(L)-E
External static pressure : 15Pa
Suction : Back inlet
Power source : 220,230,240V, 50/60Hz

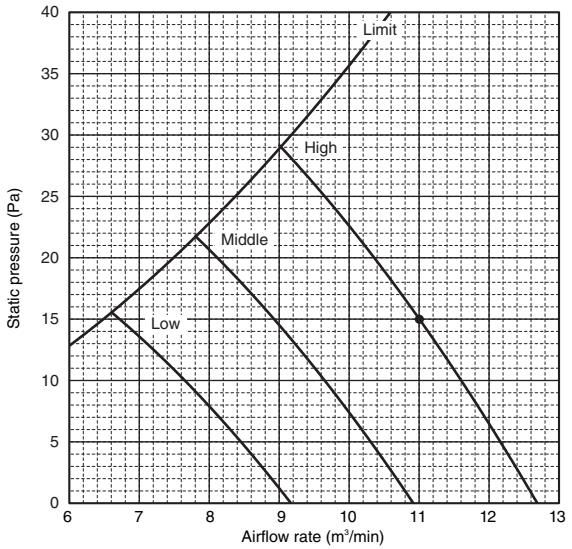

PEFY-P40VMS1(L)-E
External static pressure : 35Pa
Suction : Back inlet
Power source : 220,230,240V, 50/60Hz

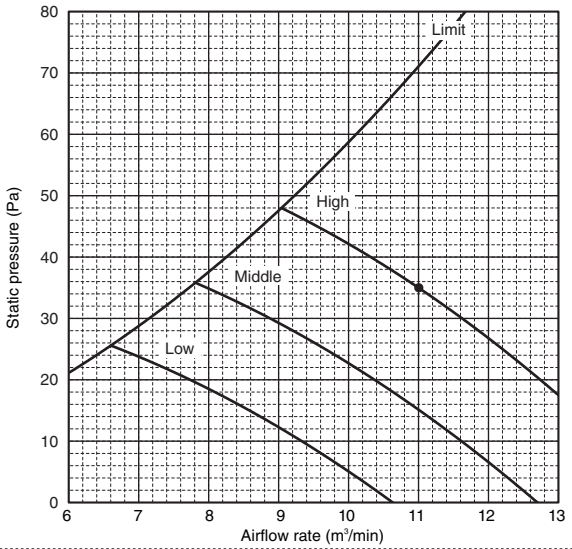

PEFY-P40VMS1(L)-E
External static pressure : 50Pa
Suction : Back inlet
Power source : 220,230,240V, 50/60Hz

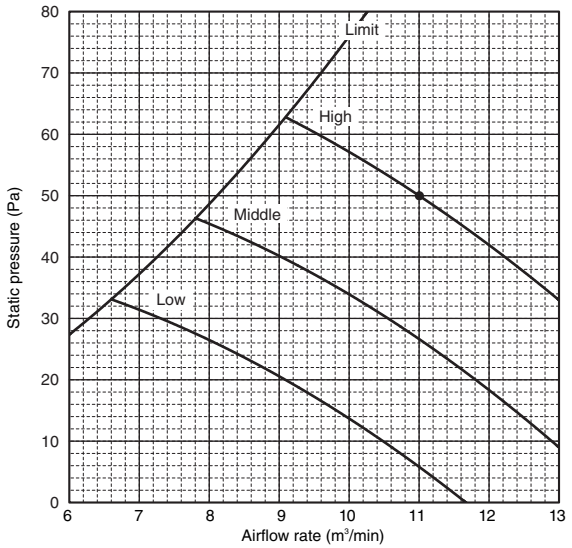

PEFY

5-3. Fan characteristics curves

PEFY-P50VMS1(L)-E
External static pressure : 5Pa
Power source : 220,230,240V, 50/60Hz
Suction : Back inlet

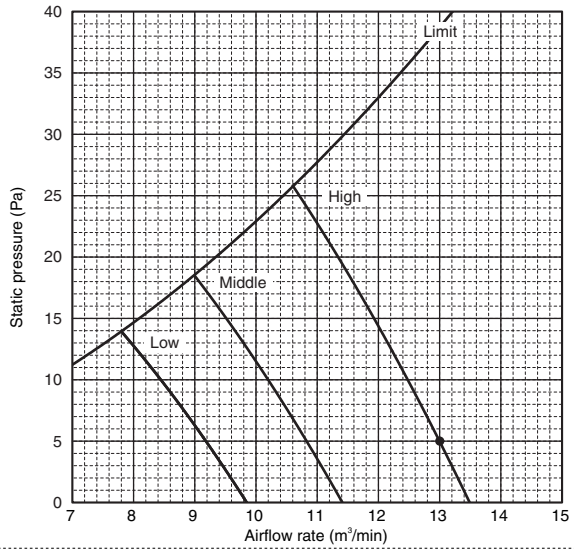

PEFY-P50VMS1(L)-E
External static pressure : 15Pa
Power source : 220,230,240V, 50/60Hz
Suction : Back inlet

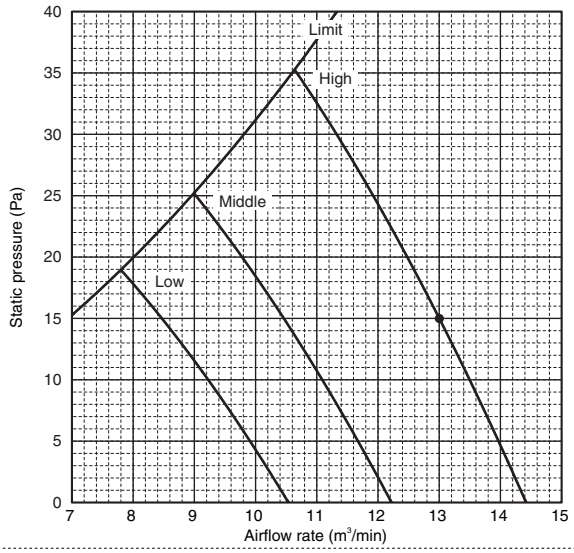

PEFY-P50VMS1(L)-E
External static pressure : 35Pa
Power source : 220,230,240V, 50/60Hz
Suction : Back inlet

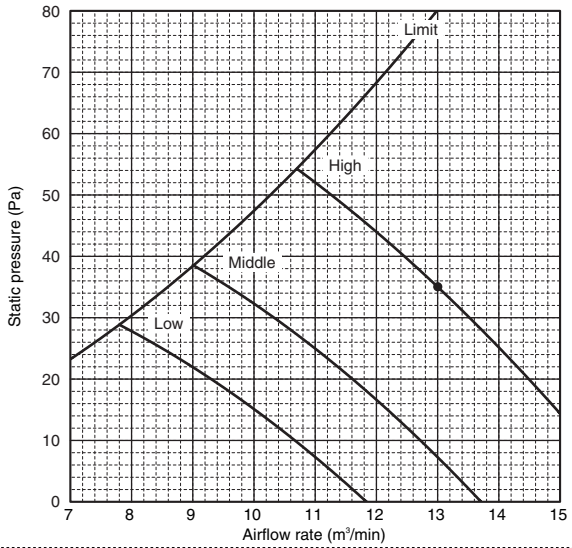

PEFY-P50VMS1(L)-E
External static pressure : 50Pa
Power source : 220,230,240V, 50/60Hz
Suction : Back inlet

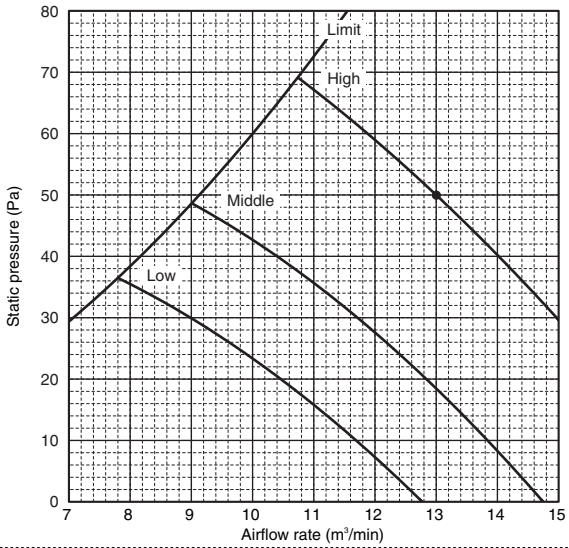

PEFY-P63VMS1(L)-E
External static pressure : 5Pa
Power source : 220,230,240V, 50/60Hz
Suction : Back inlet

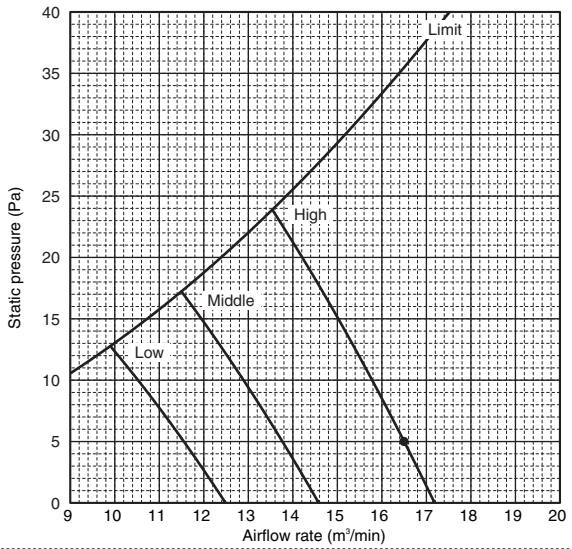

PEFY-P63VMS1(L)-E
External static pressure : 15Pa
Power source : 220,230,240V, 50/60Hz
Suction : Back inlet

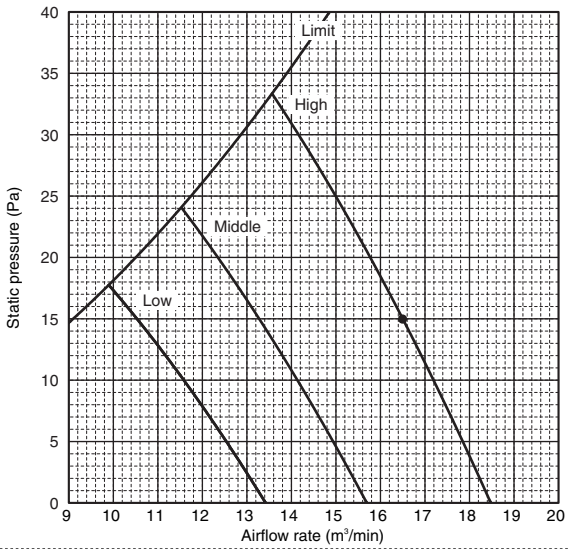

5-3. Fan characteristics curves

PEFY-P63VMS1(L)-E
External static pressure : 35Pa
Power source : 220,230,240V, 50/60Hz
Suction : Back inlet

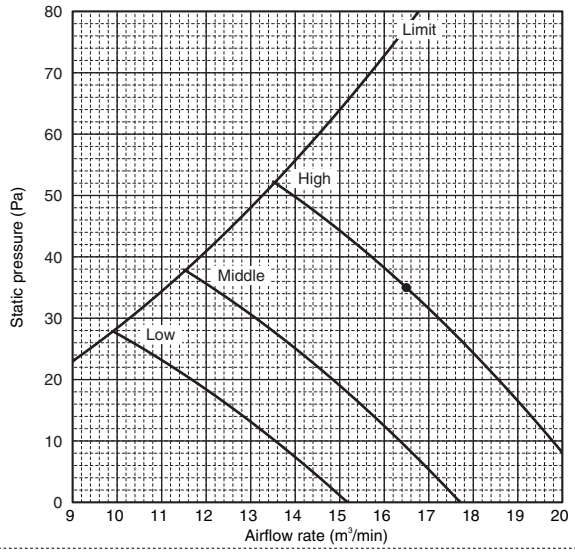

PEFY-P63VMS1(L)-E
External static pressure : 50Pa
Power source : 220,230,240V, 50/60Hz
Suction : Back inlet

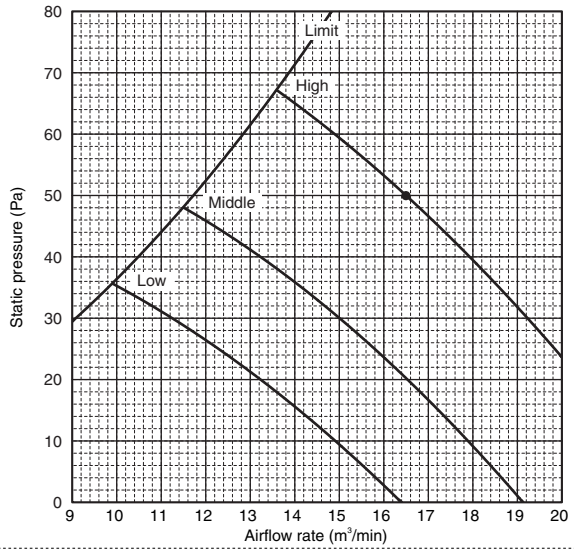

PEFY-P40,50VMH-E
External static pressure : 50,100,200Pa
Power source : 220V
Suction : Back inlet
50Hz
60Hz

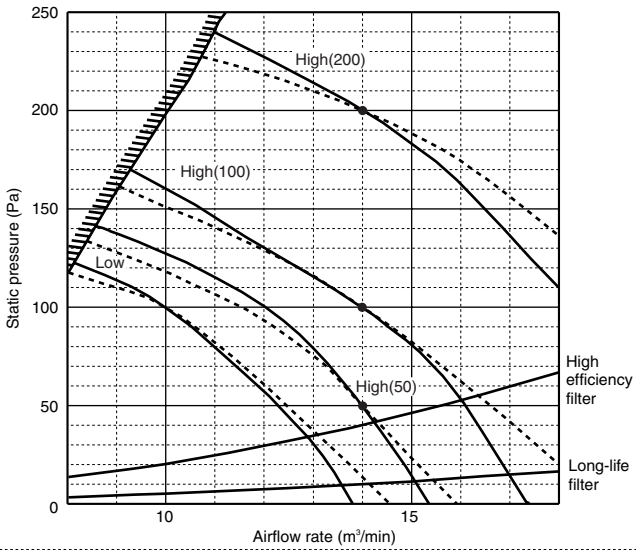

PEFY-P40,50VMH-E
External static pressure : 100,150,200Pa
Power source : 230,240V
Suction : Back inlet
50Hz
60Hz

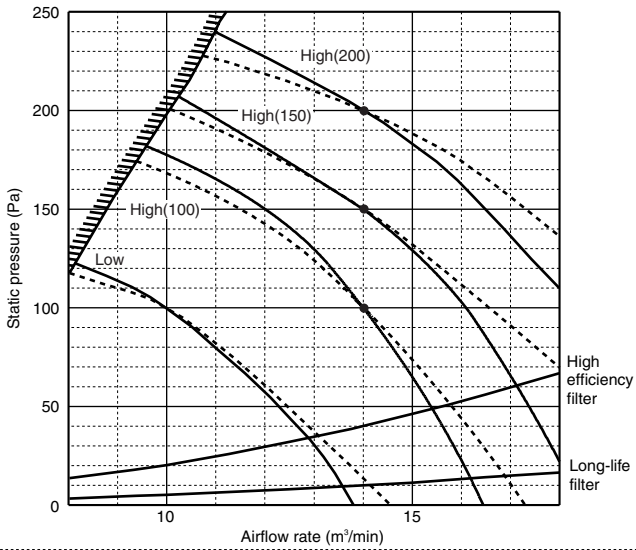

PEFY-P63VMH-E
External static pressure : 50,100,200Pa
Power source : 220V
Suction : Back inlet
50Hz
60Hz

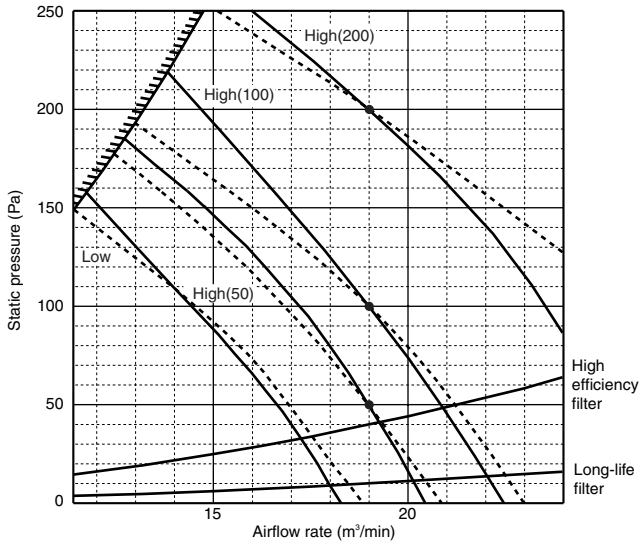

PEFY-P63VMH-E
External static pressure : 100,150,200Pa
Power source : 230,240V
Suction : Back inlet
50Hz
60Hz

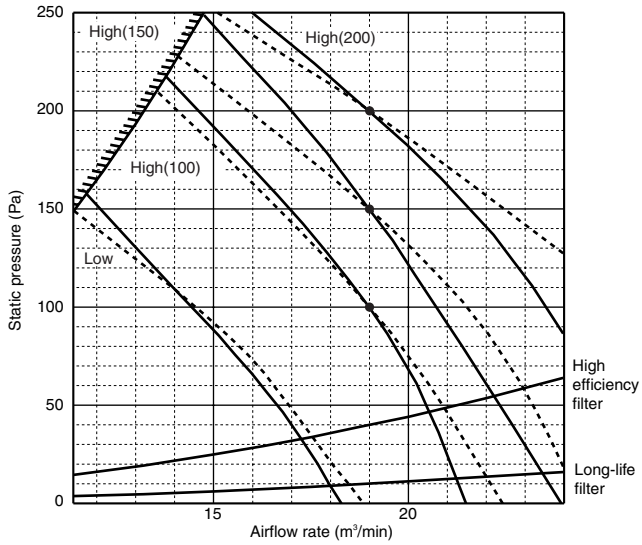

PEFY

5-3. Fan characteristics curves

PEFY-P71VMH-E
External static pressure : 50,100,200Pa
Power source : 220V

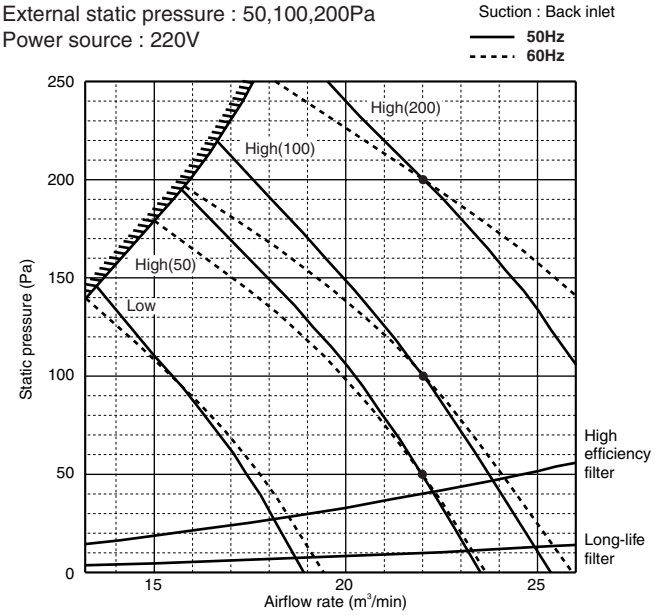

PEFY-P71VMH-E
External static pressure : 100,150,200Pa
Power source : 230,240V

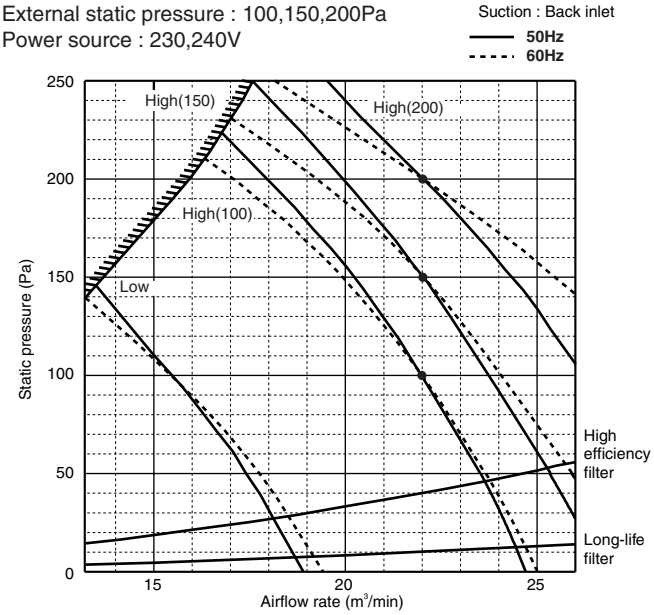

PEFY-P80VMH-E
External static pressure : 50,100,200Pa
Power source : 220V

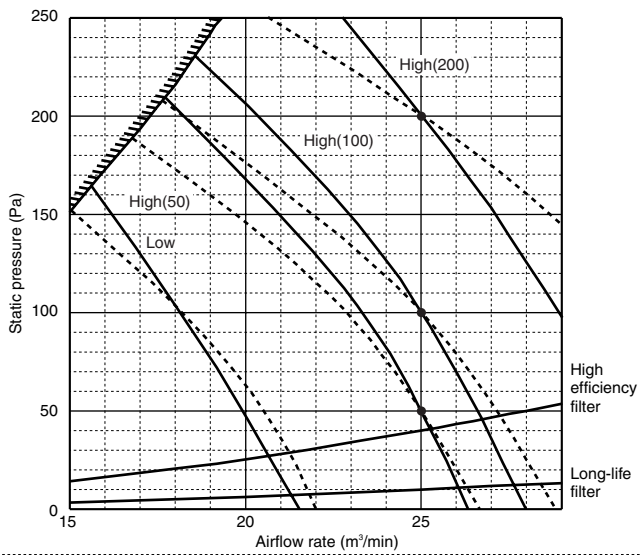

PEFY-P80VMH-E
External static pressure : 100,150,200Pa
Power source : 230,240V

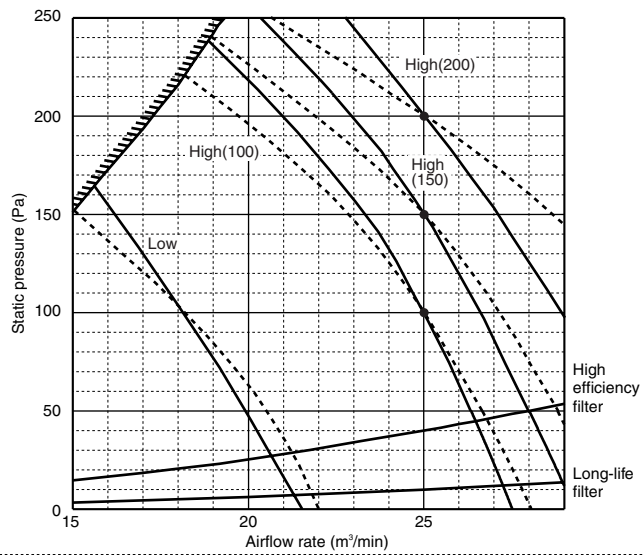

PEFY-P100,125VMH-E
External static pressure : 50,100,200Pa
Power source : 220V

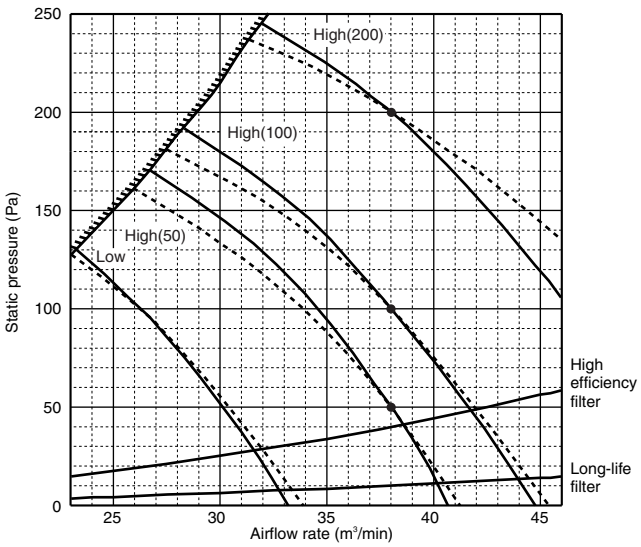

PEFY-P100,125VMH-E
External static pressure : 100,150,200Pa
Power source : 230,240V

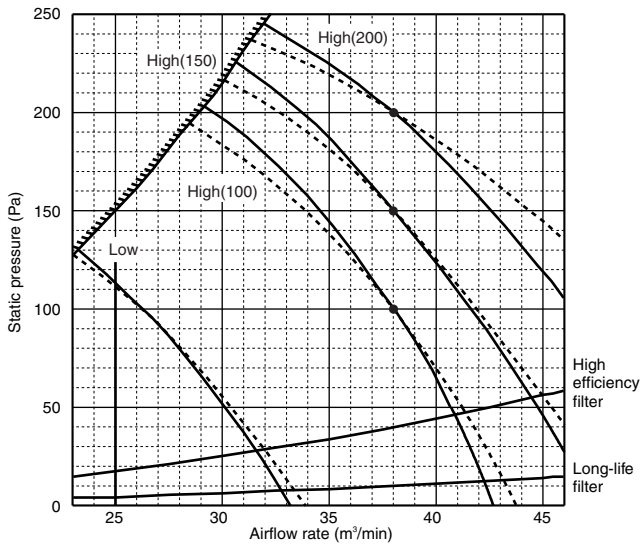

5. SOUND LEVELS

5-3. Fan characteristics curves

PEFY-P140VMH-E
External static pressure : 50,100,200Pa
Power source : 220V

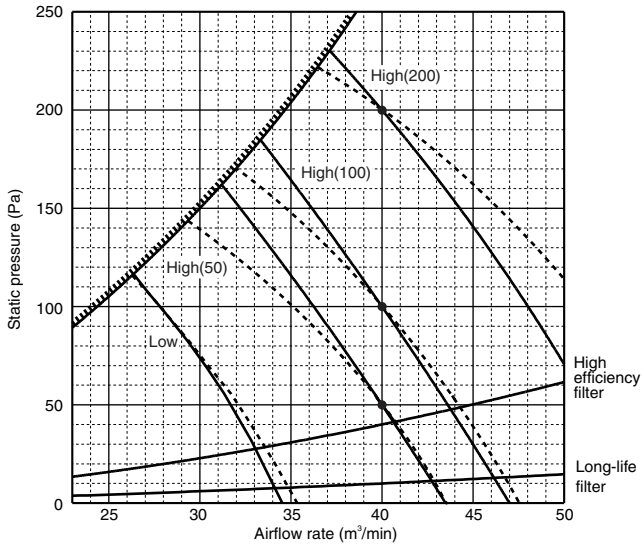

PEFY-P140VMH-E
External static pressure : 100,150,200Pa
Power source : 230,240V

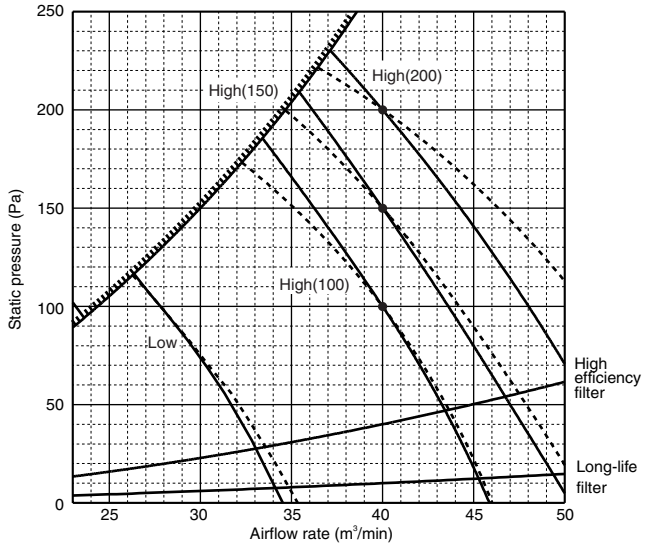

PEFY-P200VMH-E
External static pressure : 110,220Pa
Power source : 380V

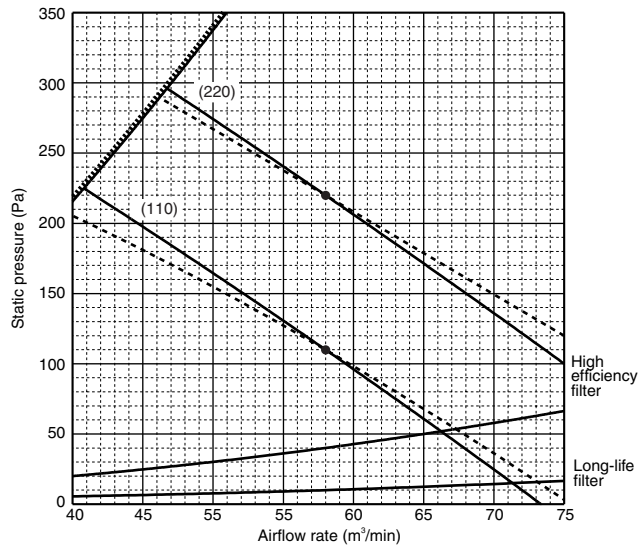

PEFY-P200VMH-E
External static pressure : 130,260Pa
Power source : 400,415V

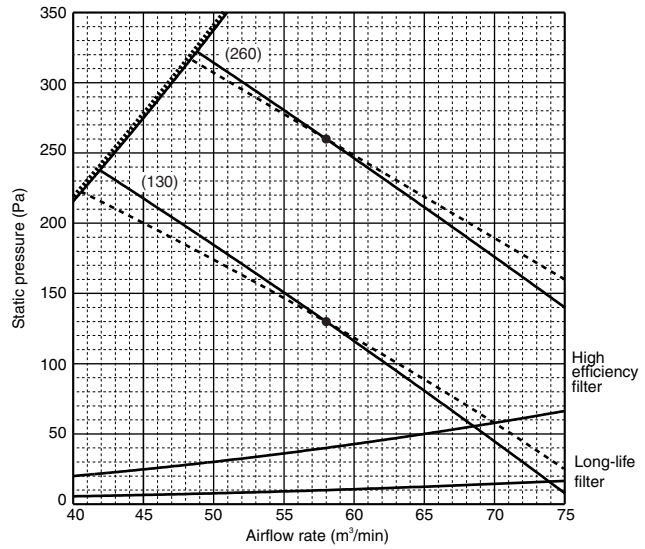

PEFY-P250VMH-E
External static pressure : 110,220Pa
Power source : 380V

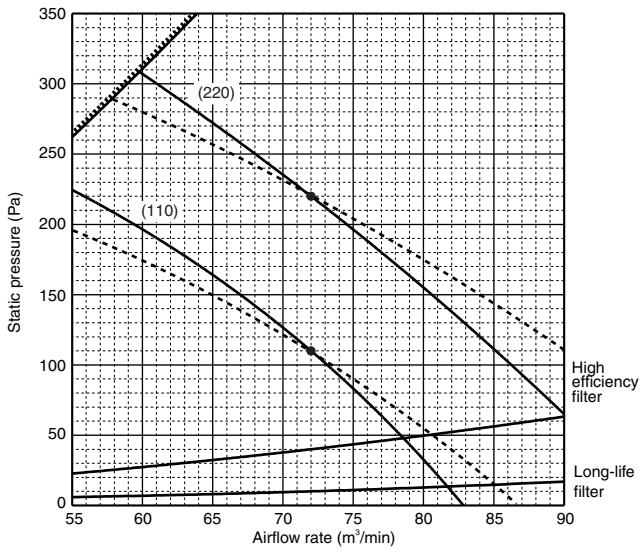

PEFY-P250VMH-E
External static pressure : 130,260Pa
Power source : 400,415V

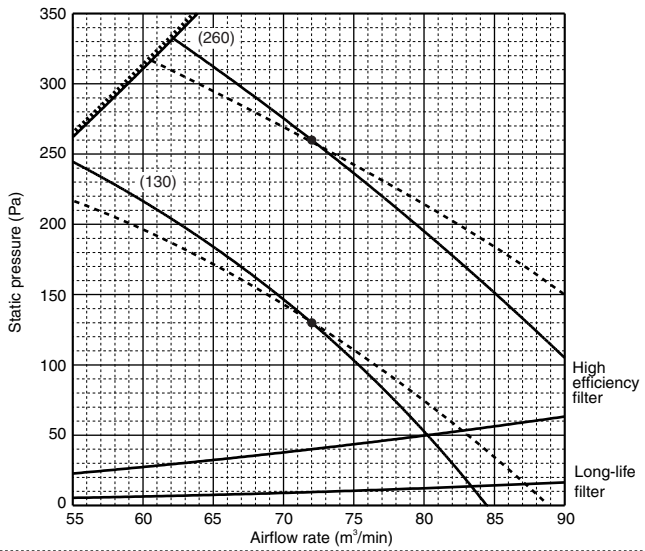

■ Optional parts line up for the Indoor unit

	Drain pump	Control box replace kit
PEFY-P15,20,25,32,40,50,63VMS1-E	-	PAC-KE70HS-E
PEFY-P15,20,25,32,40,50,63VMS1L-E	PAC-KE07DM-E	PAC-KE70HS-E

■ PEFY-P-VMS1 (L) -E

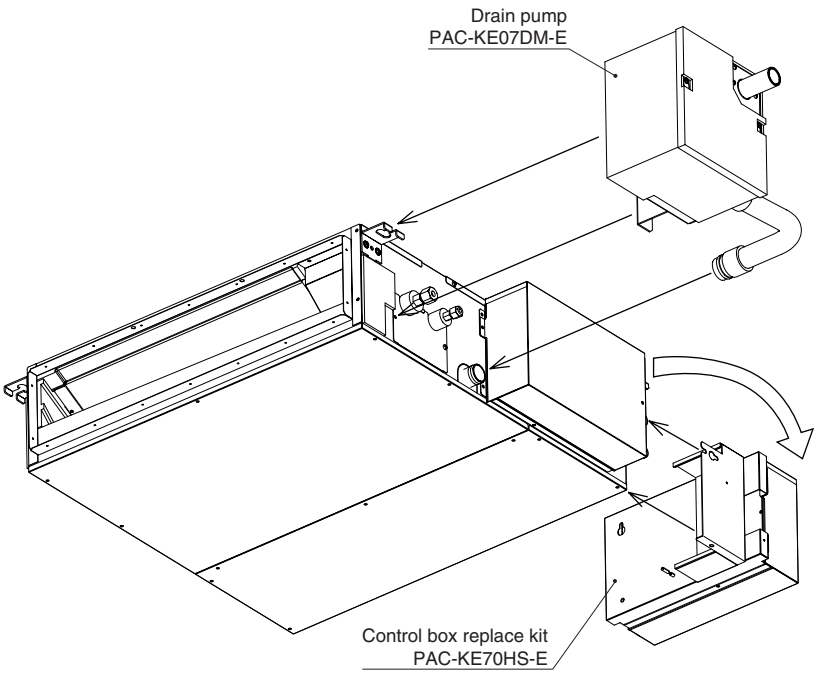

6. Optional parts for PEFY-P-VMS1L-E,VMH-E

■ Optional parts line up for the Indoor unit

	Drain pump	Control box replace kit
PEFY-P15,20,25,32,40,50,63VMS1-E	-	PAC-KE70HS-E
PEFY-P15,20,25,32,40,50,63VMS1L-E	PAC-KE07DM-E	PAC-KE70HS-E

■ Drain pump PAC-KE07DM-E

Drain pump is an optional part for VMS1L, and a standard for VMS1. When using drain pump, PAC-KE07DM-E (mounting type) is required.

Item	① Drain pump	② Attachment	③ Drain hose 1	④ Pipe cover 1	⑤ Pipe cover 2
Quantity	1	1	1	1	1
Shape			(385mm)	(255mm)	(200mm)
Item	⑥ Hose band	⑦ Screw	⑧ Clamp	⑨ Ferrite clamp	⑩ Band 1
Quantity	1	3	3	1	2
Shape	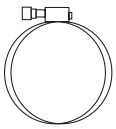			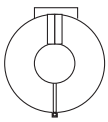	(100mm) 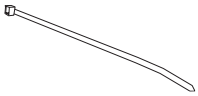
Item	⑪ Drain hose 2	⑫ Pipe cover 3	⑬ Band 2		
Quantity	1	1	6		
Shape	(175mm) 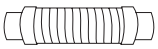	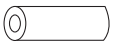	(380mm) 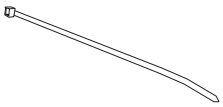		

■ Control box replace kit PAC-KE70HS-E

Parts	① PLATE A	② PLATE B	③ PLATE C	④ COVER A
Q'ty	1	1	1	1
Shape				
Parts	⑤ COVER B	⑥ LEAD WIRE MOTOR	⑦ LEAD WIRE LEV	⑧ LEAD WIRE THM A
Q'ty	1	1	1	1
Shape		White 7-pin connector	White 6-pin connector	White 4-pin connector
Parts	⑨ LEAD WIRE THM B	⑩ LEAD WIRE EARTH	⑪ LEAD WIRE PUMP	⑫ LEAD WIRE FS
Q'ty	1	1	1	1
Shape	Red 2-pin connector	Ring terminal on both ends	Blue 3-pin connector	White 4-pin connector
Parts	⑬ INSULATOR	⑭ Connecting terminals	⑮ BAND	⑯ CLAMP
Q'ty	3	4	6	4
Shape				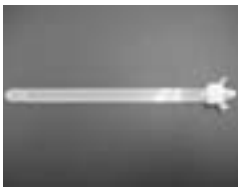
Parts	⑰ SCREW 1	⑱ SCREW 2	⑲ SCREW 3	⑳ FERRITE CORE
Q'ty	2	4	5	1
Shape	4X10	4X10 with a washer	5X10 with a washer	

When installing the control box replace kit on the air inlet on the unit, ⑫LEAD WIRE FS is not used.

6. Optional parts for PEFY-P-VMS1L-E,VMH-E

■ Optional parts line up for the Indoor unit

	Long-life filter	Filter box	Drain pump
PEFY-P40,50,63VMH-E	PAC-KE86LAF	PAC-KE63TB-F	PAC-KE04DM-F
PEFY-P71,80VMH-E	PAC-KE88LAF	PAC-KE80TB-F	PAC-KE04DM-F
PEFY-P100,125,140VMH-E	PAC-KE89LAF	PAC-KE140TB-F	PAC-KE04DM-F
PEFY-P200,250VMH-E	PAC-KE85LAF	PAC-KE250TB-F	PAC-KE04DM-F

● PEFY-P-VMH-E

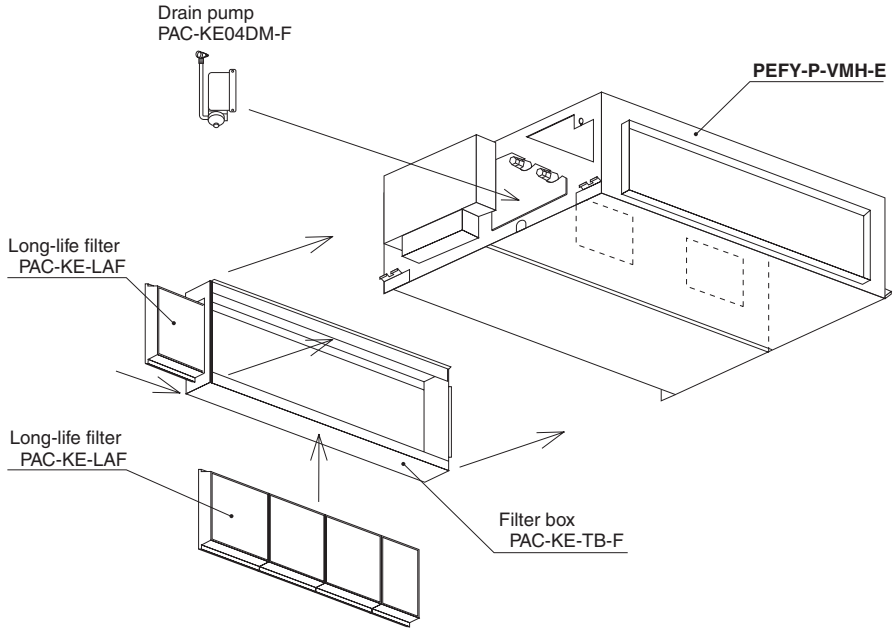

■ Optional parts line up for the Indoor unit

	Long-life filter	Filter box	Drain pump
PEFY-P40,50,63VMH-E	PAC-KE86LAF	PAC-KE63TB-F	PAC-KE04DM-F
PEFY-P71,80VMH-E	PAC-KE88LAF	PAC-KE80TB-F	PAC-KE04DM-F
PEFY-P100,125,140VMH-E	PAC-KE89LAF	PAC-KE140TB-F	PAC-KE04DM-F
PEFY-P200,250VMH-E	PAC-KE85LAF	PAC-KE250TB-F	PAC-KE04DM-F

■ Long-life filter PAC-KE-LAF and filter box PAC-KE-TB-F for PEFY-P-VMH-E

Life span: 2,500 hr (Dust concentration 0.15mg/m^3)

*. The actual dust situation affects the filter life span, which should be considered at the applying site.

Material: Synthetic fiber unwoven cloth filter

Static pressure loss is referred to 3-3 “Fan characteriastics curves”.

Long-life filter should be used together with filter box PAC-KE-TB-F.

PAC-KE-LAF

Item	PAC-KE86LAF	PAC-KE88LAF	PAC-KE89LAF	PAC-KE85LAF
Quantity	2	3	3	2
Shape	(298X300) 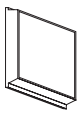	(298X300) 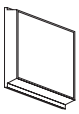	(298X300) 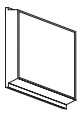	(411X600) 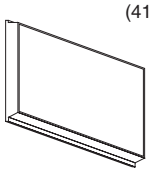

Detailed installation information should be referred to its Installation Manual (WT02574X04)

PAC-KE-TB-F

Item	① Screw	② Filter box	③ Installation manual	
Quantity	10/12*	1	1	
Shape		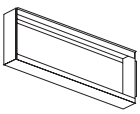	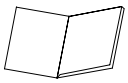	*PAC-KE250TB has 12 pieces of screw.

Detailed installation information should be referred to its Installation Manual (WT03018X02, WT03019X02)

■ Drain pump PAC-KE04DM-F

If drain water can not flow out the Indoor unit by gravity and gradient, a Drain-pump for draining is needed.
Drain pump PAC-KE04DM-F can pump water up to 550mm high from the drain pan.

Item	① Drain pump ass'y	② Separator	③ Rubber plug	④ Connector	⑤ Dummy connector
Quantity	1	1	2	1	1
Shape	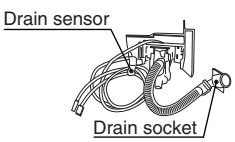	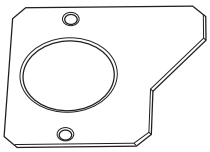		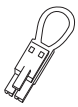	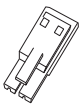
Item	⑥ Rubber bushing	⑦ Band	⑧ PTT screw 4X10	⑨ Fixing plate	⑩ Installation manual
Quantity	1	2	6+1 (spare)	1	1
Shape		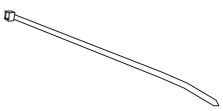		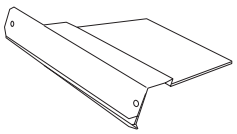	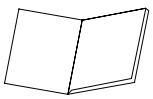

Detailed installation information should be referred to its Installation Manual (WT03312X02)

PEFY-P-VMA(L)-E

1. SPECIFICATIONS ..... 1 - 42
2. EXTERNAL DIMENSIONS ..... 1 - 48
3. CENTER OF GRAVITY ..... 1 - 56
4. ELECTRICAL WIRING DIAGRAMS ..... 1 - 57
5. SOUND LEVELS ..... 1 - 58
   5-1. Sound levels ..... 1 - 58
   5-2. NC curves ..... 1 - 59
6. FAN CHARACTERISTICS CURVES ..... 1 - 67
7. OPTIONAL PARTS ..... 1 - 76

Model			PEFY-P20VMA-E	PEFY-P25VMA-E	PEFY-P32VMA-E	PEFY-P40VMA-E
Power source			1-phase 220-230-240V 50/60Hz	1-phase 220-230-240V 50/60Hz	1-phase 220-230-240V 50/60Hz	1-phase 220-230-240V 50/60Hz
Cooling capacity (Nominal)	*1	kW	2.2	2.8	3.6	4.5
	*1	kcal / h	1,900	2,400	3,100	3,900
	*1	BTU / h	7,500	9,600	12,300	15,400
	*2 Power input	kW	0.06	0.06	0.07	0.09
	*2 Current input	A	0.53	0.53	0.55	0.64
Heating capacity (Nominal)	*3	kW	2.5	3.2	4.0	5.0
	*3	kcal / h	2,200	2,800	3,400	4,300
	*3	BTU / h	8,500	10,900	13,600	17,100
	*2 Power input	kW	0.04	0.04	0.05	0.07
	*2 Current input	A	0.42	0.42	0.44	0.53
External finish			Galvanized steel plate	Galvanized steel plate	Galvanized steel plate	Galvanized steel plate
External dimension HxWxD		mm	250 x 700 x 732	250 x 700 x 732	250 x 700 x 732	250 x 900 x 732
		inch	9-7/8 x 27-9/16 x 28-7/8	9-7/8 x 27-9/16 x 28-7/8	9-7/8 x 27-9/16 x 28-7/8	9-7/8 x 35-7/16 x 28-7/8
Net weight		kg(lbs)	23(51)	23(51)	23(51)	26(58)
Heat exchanger			Cross fin(Aluminum fin and copper tube)	Cross fin(Aluminum fin and copper tube)	Cross fin(Aluminum fin and copper tube)	Cross fin(Aluminum fin and copper tube)
FAN	Type x Quantity		Sirocco fan x 1	Sirocco fan x 1	Sirocco fan x 1	Sirocco fan x 1
	*4 External static press.	Pa	<35> - 50 - <70> - <100> - <150>	<35> - 50 - <70> - <100> - <150>	<35> - 50 - <70> - <100> - <150>	<35> - 50 - <70> - <100> - <150>
		mmH_2O	<3.6> - 5.1 - <7.1> - <10.2> - <15.3>	<3.6> - 5.1 - <7.1> - <10.2> - <15.3>	<3.6> - 5.1 - <7.1> - <10.2> - <15.3>	<3.6> - 5.1 - <7.1> - <10.2> - <15.3>
	Motor Type		DC brushless motor	DC brushless motor	DC brushless motor	DC brushless motor
	Motor output	kW	0.085	0.085	0.085	0.085
	Driving mechanism		Direct-driven by motor	Direct-driven by motor	Direct-driven by motor	Direct-driven by motor
	Air flow rate		(Low-Mid-High)	(Low-Mid-High)	(Low-Mid-High)	(Low-Mid-High)
		m^3 / min	6.0 - 7.5 - 8.5	6.0 - 7.5 - 8.5	7.5 - 9.0 - 10.5	10.0 - 12.0 - 14.0
		L/s	100 - 125 - 142	100 - 125 - 142	125 - 150 - 175	167 - 200 - 233
		cfm	212 - 265 - 300	212 - 265 - 300	265 - 318 - 371	353 - 424 - 494
Sound pressure level (measured in anechoic room)			(Low-Mid-High)	(Low-Mid-High)	(Low-Mid-High)	(Low-Mid-High)
	*2 *5	dB <A>	26-28-29	26-28-29	28-30-34	28-30-34
	*2 *6	dB <A>	23-25-26	23-25-26	23-26-29	23-27-30
Insulation material			EPS, Polyethylene foam, Urethane foam	EPS, Polyethylene foam, Urethane foam	EPS, Polyethylene foam, Urethane foam	EPS, Polyethylene foam, Urethane foam
Air filter			PP honeycomb fabric.	PP honeycomb fabric.	PP honeycomb fabric.	PP honeycomb fabric.
Protection device			Fuse	Fuse	Fuse	Fuse
Refrigerant control device			LEV	LEV	LEV	LEV
Connectable outdoor unit			R410A CITY MULTI	R410A CITY MULTI	R410A CITY MULTI	R410A CITY MULTI
Diameter of refrigerant pipe	Liquid (R410A)	mm(in.)	6.35(1/4)Brazed	6.35(1/4)Brazed	6.35(1/4)Brazed	6.35(1/4)Brazed
	Gas (R410A)	mm(in.)	12.7(1/2)Brazed	12.7(1/2)Brazed	12.7(1/2)Brazed	12.7(1/2)Brazed
Field drain pipe size		mm(in.)	O.D.32(1-1/4)	O.D.32(1-1/4)	O.D.32(1-1/4)	O.D.32(1-1/4)
Drawing	External		IU-KB94-R528	IU-KB94-R528	IU-KB94-R528	IU-KB94-R528
	Wiring		IU-KB94-R069	IU-KB94-R069	IU-KB94-R069	IU-KB94-R069
	Refrigerant cycle		-	-	-	-
Standard attachment	Document		Installation Manual, Instruction Book	Installation Manual, Instruction Book	Installation Manual, Instruction Book	Installation Manual, Instruction Book
	Accessory		Insulation pipe for refrigerant pipe, Washer, Drain hose, Tie band	Insulation pipe for refrigerant pipe, Washer, Drain hose, Tie band	Insulation pipe for refrigerant pipe, Washer, Drain hose, Tie band	Insulation pipe for refrigerant pipe, Washer, Drain hose, Tie band
Optional parts	Filter box		PAC-KE91TB-E	PAC-KE91TB-E	PAC-KE91TB-E	PAC-KE92TB-E
Remarks			* Details on foundation work, duct work, insulation work, electrical wiring, power source switch, and other items shall be referred to the Installation Manual. * Due to continuing improvement, above specifications may be subject to change without notice.			

Notes :

1.Nominal cooling conditions
Indoor:27°CDB/19°CWB(81°FDB/66°FWB), Outdoor:35°CDB(95°FDB)
Pipe length:7.5m(24-9/16ft.), Level difference:0m(0ft.)
2.The values are measured at the rated external static pressure.
3.Nominal heating conditions
Indoor:20°CDB(68°FDB), Outdoor:7°CDB/6°CWB(45°FDB/43°FWB)
Pipe length:7.5m(24-9/16ft.), Level difference:0m(0ft.)
4.The rated external static pressure is shown without < >.The factory setting is the rated value.
5.Measured in anechoic room with a 1m air inlet duct and 2m air outlet duct attached to the unit and 1.5m below the unit.
Refer to 5-1-1 for details.
6.Measured in anechoic room with a 2m air inlet duct and 2m air outlet duct attached to the unit and 1.5m below the unit.
Refer to 5-1-2 for details.

Unit converter

kcal	=kW x 860
BTU/h	=kW x 3,412
cfm	$=m^3$/min x 35.31
lbs	=kg / 0.4536

*Above specification data is subject to rounding variation.

1. SPECIFICATIONS

Model			PEFY-P50VMA-E	PEFY-P63VMA-E	PEFY-P71VMA-E	PEFY-P80VMA-E
Power source			1-phase 220-230-240V 50/60Hz	1-phase 220-230-240V 50/60Hz	1-phase 220-230-240V 50/60Hz	1-phase 220-230-240V 50/60Hz
Cooling capacity (Nominal)	*1	kW	5.6	7.1	8.0	9.0
	*1	kcal / h	4,800	6,100	6,900	7,700
	*1	BTU / h	19,100	24,200	27,300	30,700
	*2 Power input	kW	0.11	0.12	0.14	0.14
	*2 Current input	A	0.74	1.01	1.15	1.15
Heating capacity (Nominal)	*3	kW	6.3	8.0	9.0	10.0
	*3	kcal / h	5,400	6,900	7,700	8,600
	*3	BTU / h	21,500	27,300	30,700	34,100
	*2 Power input	kW	0.09	0.10	0.12	0.12
	*2 Current input	A	0.63	0.90	1.04	1.04
External finish			Galvanized steel plate	Galvanized steel plate	Galvanized steel plate	Galvanized steel plate
External dimension HxWxD		mm	250 x 900 x 732	250 x 1,100 x 732	250 x 1,100 x 732	250 x 1,100 x 732
		inch	9-7/8 x 35-7/16 x 28-7/8	9-7/8 x 43-5/16 x 28-7/8	9-7/8 x 43-5/16 x 28-7/8	9-7/8 x 43-5/16 x 28-7/8
Net weight		kg(lbs)	26(58)	32(71)	32(71)	32(71)
Heat exchanger			Cross fin(Aluminum fin and copper tube)	Cross fin(Aluminum fin and copper tube)	Cross fin(Aluminum fin and copper tube)	Cross fin(Aluminum fin and copper tube)
FAN	Type x Quantity		Sirocco fan x 1	Sirocco fan x 2	Sirocco fan x 2	Sirocco fan x 2
	*4 External static press.	Pa	<35> - 50 - <70> - <100> - <150>	<35> - 50 - <70> - <100> - <150>	<35> - 50 - <70> - <100> - <150>	<35> - 50 - <70> - <100> - <150>
		mmH_2O	<3.6> - 5.1 - <7.1> - <10.2> - <15.3>	<3.6> - 5.1 - <7.1> - <10.2> - <15.3>	<3.6> - 5.1 - <7.1> - <10.2> - <15.3>	<3.6> - 5.1 - <7.1> - <10.2> - <15.3>
	Motor Type		DC brushless motor	DC brushless motor	DC brushless motor	DC brushless motor
	Motor output	kW	0.085	0.121	0.121	0.121
	Driving mechanism		Direct-driven by motor	Direct-driven by motor	Direct-driven by motor	Direct-driven by motor
	Air flow rate		(Low-Mid-High)	(Low-Mid-High)	(Low-Mid-High)	(Low-Mid-High)
		m^3 / min	12.0 - 14.5 - 17.0	13.5 - 16.0 - 19.0	14.5 - 18.0 - 21.0	14.5 - 18.0 - 21.0
		L/s	200 - 242 - 283	225 - 267 - 317	242 - 300 - 350	242 - 300 - 350
		cfm	424 - 512 - 600	477 - 565 - 671	512 - 636 - 742	512 - 636 - 742
Sound pressure level (measured in anechoic room)			(Low-Mid-High)	(Low-Mid-High)	(Low-Mid-High)	(Low-Mid-High)
	*2 *5	dB <A>	28-32-35	29-32-36	30-34-38	30-34-38
	*2 *6	dB <A>	25-29-32	25-29-33	26-29-34	26-29-34
Insulation material			EPS, Polyethylene foam, Urethane foam	EPS, Polyethylene foam, Urethane foam	EPS, Polyethylene foam, Urethane foam	EPS, Polyethylene foam, Urethane foam
Air filter			PP honeycomb fabric.	PP honeycomb fabric.	PP honeycomb fabric.	PP honeycomb fabric.
Protection device			Fuse	Fuse	Fuse	Fuse
Refrigerant control device			LEV	LEV	LEV	LEV
Connectable outdoor unit			R410A CITY MULTI	R410A CITY MULTI	R410A CITY MULTI	R410A CITY MULTI
Diameter of refrigerant pipe	Liquid (R410A)	mm(in.)	6.35(1/4)Brazed	9.52(3/8)Brazed	9.52(3/8)Brazed	9.52(3/8)Brazed
	Gas (R410A)	mm(in.)	12.7(1/2)Brazed	15.88(5/8)Brazed	15.88(5/8)Brazed	15.88(5/8)Brazed
Field drain pipe size		mm(in.)	O.D.32(1-1/4)	O.D.32(1-1/4)	O.D.32(1-1/4)	O.D.32(1-1/4)
Drawing	External		IU-KB94-R528	IU-KB94-R528	IU-KB94-R528	IU-KB94-R528
	Wiring		IU-KB94-R069	IU-KB94-R069	IU-KB94-R069	IU-KB94-R069
	Refrigerant cycle		-	-	-	-
Standard attachment	Document		Installation Manual, Instruction Book	Installation Manual, Instruction Book	Installation Manual, Instruction Book	Installation Manual, Instruction Book
	Accessory		Insulation pipe for refrigerant pipe, Washer, Drain hose, Tie band	Insulation pipe for refrigerant pipe, Washer, Drain hose, Tie band	Insulation pipe for refrigerant pipe, Washer, Drain hose, Tie band	Insulation pipe for refrigerant pipe, Washer, Drain hose, Tie band
Optional parts	Filter box		PAC-KE92TB-E	PAC-KE93TB-E	PAC-KE93TB-E	PAC-KE93TB-E
Remarks			* Details on foundation work, duct work, insulation work, electrical wiring, power source switch, and other items shall be referred to the Installation Manual. * Due to continuing improvement, above specifications may be subject to change without notice.			

Notes :

1.Nominal cooling conditions
Indoor:27°CDB/19°CWB(81°FDB/66°FWB), Outdoor:35°CDB(95°FDB)
Pipe length:7.5m(24-9/16ft.), Level difference:0m(0ft.)
2.The values are measured at the rated external static pressure.
3.Nominal heating conditions
Indoor:20°CDB(68°FDB), Outdoor:7°CDB/6°CWB(45°FDB/43°FWB)
Pipe length:7.5m(24-9/16ft.), Level difference:0m(0ft.)
4.The rated external static pressure is shown without < >.The factory setting is the rated value.
5.Measured in anechoic room with a 1m air inlet duct and 2m air outlet duct attached to the unit and 1.5m below the unit.
Refer to 5-1-1 for details.
6.Measured in anechoic room with a 2m air inlet duct and 2m air outlet duct attached to the unit and 1.5m below the unit.
Refer to 5-1-2 for details.

Unit converter

kcal	=kW x 860
BTU/h	=kW x 3,412
cfm	$=m^3$/min x 35.31
lbs	=kg / 0.4536

*Above specification data is subject to rounding variation.

Model			PEFY-P100VMA-E	PEFY-P125VMA-E	PEFY-P140VMA-E	
Power source			1-phase 220-230-240V 50/60Hz	1-phase 220-230-240V 50/60Hz	1-phase 220-230-240V 50/60Hz	
Cooling capacity (Nominal)	*1	kW	11.2	14.0	16.0	
	*1	kcal / h	9,600	12,000	13,800	
	*1	BTU / h	38,200	47,800	54,600	
*2	Power input	kW	0.24	0.34	0.36	
*2	Current input	A	1.47	2.05	2.21	
Heating capacity (Nominal)	*3	kW	12.5	16.0	18.0	
	*3	kcal / h	10,800	13,800	15,500	
	*3	BTU / h	42,700	54,600	61,400	
*2	Power input	kW	0.22	0.32	0.34	
*2	Current input	A	1.36	1.94	2.10	
External finish			Galvanized steel plate	Galvanized steel plate	Galvanized steel plate	
External dimension HxWxD		mm	250 x 1,400 x 732	250 x 1,400 x 732	250 x 1,600 x 732	
		inch	9-7/8 x 55-1/8 x 28-7/8	9-7/8 x 55-1/8 x 28-7/8	9-7/8 x 63 x 28-7/8	
Net weight		kg(lbs)	42(93)	42(93)	46(102)	
Heat exchanger			Cross fin(Aluminum fin and copper tube)	Cross fin(Aluminum fin and copper tube)	Cross fin(Aluminum fin and copper tube)	
FAN	Type x Quantity		Sirocco fan x 2	Sirocco fan x 2	Sirocco fan x 2	
*4	External static press.	Pa	<35> - 50 - <70> - <100> - <150>	<35> - 50 - <70> - <100> - <150>	<35> - 50 - <70> - <100> - <150>	
		mmH_2O	<3.6> - 5.1 - <7.1> - <10.2> - <15.3>	<3.6> - 5.1 - <7.1> - <10.2> - <15.3>	<3.6> - 5.1 - <7.1> - <10.2> - <15.3>	
	Motor Type		DC brushless motor	DC brushless motor	DC brushless motor	
	Motor output	kW	0.244	0.244	0.244	
	Driving mechanism		Direct-driven by motor°	Direct-driven by motor	Direct-driven by motor	
	Air flow rate		(Low-Mid-High)	(Low-Mid-High)	(Low-Mid-High)	
		m^3 / min	23.0 - 28.0 - 33.0	28.0 - 34.0 - 40.0	29.5 - 35.5 - 42.0	
		L/s	383 - 467 - 550	467 - 567 - 667	492 - 592 - 700	
		cfm	812 - 989 - 1,165	989 - 1,201 - 1,412	1,042 - 1,254 - 1,483	
Sound pressure level (measured in anechoic room)			(Low-Mid-High)	(Low-Mid-High)	(Low-Mid-High)	
	*2 *5	dB <A>	32-37-41	35-40-44	36-41-45	
	*2 *6	dB <A>	28-33-37	32-36-40	33-37-42	
Insulation material			EPS, Polyethylene foam, Urethane foam	EPS, Polyethylene foam, Urethane foam	EPS, Polyethylene foam, Urethane foam	
Air filter			PP honeycomb fabric.	PP honeycomb fabric.	PP honeycomb fabric.	
Protection device			Fuse	Fuse	Fuse	
Refrigerant control device			LEV	LEV	LEV	
Connectable outdoor unit		*5	R410A CITY MULTI	R410A CITY MULTI	R410A CITY MULTI	
Diameter of refrigerant pipe	Liquid (R410A)	mm(in.)	9.52(3/8)Brazed	9.52(3/8)Brazed	9.52(3/8)Brazed	
	Gas (R410A)	mm(in.)	15.88(5/8)Brazed	15.88(5/8)Brazed	15.88(5/8)Brazed	
Field drain pipe size		mm(in.)	O.D.32(1-1/4)	O.D.32(1-1/4)	O.D.32(1-1/4)	
Drawing	External		IU-KB94-R528	IU-KB94-R528	IU-KB94-R528	
	Wiring		IU-KB94-R069	IU-KB94-R069	IU-KB94-R069	
	Refrigerant cycle		-	-	-	
Standard attachment	Document		Installation Manual, Instruction Book	Installation Manual, Instruction Book	Installation Manual, Instruction Book	
	Accessory		Insulation pipe for refrigerant pipe, Washer, Drain hose, Tie band	Insulation pipe for refrigerant pipe, Washer, Drain hose, Tie band	Insulation pipe for refrigerant pipe, Washer, Drain hose, Tie band	
Optional parts	Filter box		PAC-KE94TB-E	PAC-KE94TB-E	PAC-KE95TB-E	
Remarks			* Details on foundation work, duct work, insulation work, electrical wiring, power source switch, and other items shall be referred to the Installation Manual. * Due to continuing improvement, above specifications may be subject to change without notice.			

Notes :

1.Nominal cooling conditions
Indoor:27°CDB/19°CWB(81°FDB/66°FWB), Outdoor:35°CDB(95°FDB)
Pipe length:7.5m(24-9/16ft.), Level difference:0m(0ft.)
2.The values are measured at the rated external static pressure.
3.Nominal heating conditions
Indoor:20°CDB(68°FDB), Outdoor:7°CDB/6°CWB(45°FDB/43°FWB)
Pipe length:7.5m(24-9/16ft.), Level difference:0m(0ft.)
4.The rated external static pressure is shown without < >.The factory setting is the rated value.
5.Measured in anechoic room with a 1m air inlet duct and 2m air outlet duct attached to the unit and 1.5m below the unit.
Refer to 5-1-1 for details.
6.Measured in anechoic room with a 2m air inlet duct and 2m air outlet duct attached to the unit and 1.5m below the unit.
Refer to 5-1-2 for details.

Unit converter	
kcal	=kW x 860
BTU/h	=kW x 3,412
cfm	$=m^3$/min x 35.31
lbs	=kg / 0.4536

*Above specification data is subject to rounding variation.

Model			PEFY-P20VMAL-E	PEFY-P25VMAL-E	PEFY-P32VMAL-E	PEFY-P40VMAL-E
Power source			1-phase 220-230-240V 50/60Hz	1-phase 220-230-240V 50/60Hz	1-phase 220-230-240V 50/60Hz	1-phase 220-230-240V 50/60Hz
Cooling capacity (Nominal)	*1	kW	2.2	2.8	3.6	4.5
	*1	kcal / h	1,900	2,400	3,100	3,900
	*1	BTU / h	7,500	9,600	12,300	15,400
	*2 Power input	kW	0.04	0.04	0.05	0.07
	*2 Current input	A	0.42	0.42	0.44	0.53
Heating capacity (Nominal)	*3	kW	2.5	3.2	4.0	5.0
	*3	kcal / h	2,200	2,800	3,400	4,300
	*3	BTU / h	8,500	10,900	13,600	17,100
	*2 Power input	kW	0.04	0.04	0.05	0.07
	*2 Current input	A	0.42	0.42	0.44	0.53
External finish			Galvanized steel plate	Galvanized steel plate	Galvanized steel plate	Galvanized steel plate
External dimension HxWxD		mm	250 x 700 x 732	250 x 700 x 732	250 x 700 x 732	250 x 900 x 732
		inch	9-7/8 x 27-9/16 x 28-7/8	9-7/8 x 27-9/16 x 28-7/8	9-7/8 x 27-9/16 x 28-7/8	9-7/8 x 35-7/16 x 28-7/8
Net weight		kg(lbs)	22(49)	22(49)	22(49)	25(56)
Heat exchanger			Cross fin(Aluminum fin and copper tube)	Cross fin(Aluminum fin and copper tube)	Cross fin(Aluminum fin and copper tube)	Cross fin(Aluminum fin and copper tube)
FAN	Type x Quantity		Sirocco fan x 1	Sirocco fan x 1	Sirocco fan x 1	Sirocco fan x 1
	*4 External static press.	Pa	<35> - 50 - <70> - <100> - <150>	<35> - 50 - <70> - <100> - <150>	<35> - 50 - <70> - <100> - <150>	<35> - 50 - <70> - <100> - <150>
		mmH_2O	<3.6> - 5.1 - <7.1> - <10.2> - <15.3>	<3.6> - 5.1 - <7.1> - <10.2> - <15.3>	<3.6> - 5.1 - <7.1> - <10.2> - <15.3>	<3.6> - 5.1 - <7.1> - <10.2> - <15.3>
	Motor Type		DC brushless motor	DC brushless motor	DC brushless motor	DC brushless motor
	Motor output	kW	0.085	0.085	0.085	0.085
	Driving mechanism		Direct-driven by motor	Direct-driven by motor	Direct-driven by motor	Direct-driven by motor
	Air flow rate		(Low-Mid-High)	(Low-Mid-High)	(Low-Mid-High)	(Low-Mid-High)
		m^3 / min	6.0 - 7.5 - 8.5	6.0 - 7.5 - 8.5	7.5 - 9.0 - 10.5	10.0 - 12.0 - 14.0
		L/s	100 - 125 - 142	100 - 125 - 142	125 - 150 - 175	167 - 200 - 233
		cfm	212 - 265 - 300	212 - 265 - 300	265 - 318 - 371	353 - 424 - 494
Sound pressure level (measured in anechoic room)			(Low-Mid-High)	(Low-Mid-High)	(Low-Mid-High)	(Low-Mid-High)
	*2 *5	dB <A>	26-28-29	26-28-29	28-30-34	28-30-34
	*2 *6	dB <A>	23-25-26	23-25-26	23-26-29	23-27-30
Insulation material			EPS, Polyethylene foam, Urethane foam	EPS, Polyethylene foam, Urethane foam	EPS, Polyethylene foam, Urethane foam	EPS, Polyethylene foam, Urethane foam
Air filter			PP honeycomb fabric.	PP honeycomb fabric.	PP honeycomb fabric.	PP honeycomb fabric.
Protection device			Fuse	Fuse	Fuse	Fuse
Refrigerant control device			LEV	LEV	LEV	LEV
Connectable outdoor unit			R410A CITY MULTI	R410A CITY MULTI	R410A CITY MULTI	R410A CITY MULTI
Diameter of refrigerant pipe	Liquid (R410A)	mm(in.)	6.35(1/4)Brazed	6.35(1/4)Brazed	6.35(1/4)Brazed	6.35(1/4)Brazed
	Gas (R410A)	mm(in.)	12.7(1/2)Brazed	12.7(1/2)Brazed	12.7(1/2)Brazed	12.7(1/2)Brazed
Field drain pipe size		mm(in.)	O.D.32(1-1/4)	O.D.32(1-1/4)	O.D.32(1-1/4)	O.D.32(1-1/4)
Drawing	External		IU-KB94-R548	IU-KB94-R548	IU-KB94-R548	IU-KB94-R548
	Wiring		IU-KB94-R069	IU-KB94-R069	IU-KB94-R069	IU-KB94-R069
	Refrigerant cycle		-	-	-	-
Standard attachment	Document		Installation Manual, Instruction Book	Installation Manual, Instruction Book	Installation Manual, Instruction Book	Installation Manual, Instruction Book
	Accessory		Insulation pipe for refrigerant pipe, Washer, Drain hose, Tie band	Insulation pipe for refrigerant pipe, Washer, Drain hose, Tie band	Insulation pipe for refrigerant pipe, Washer, Drain hose, Tie band	Insulation pipe for refrigerant pipe, Washer, Drain hose, Tie band
Optional parts	Filter box		PAC-KE91TB-E	PAC-KE91TB-E	PAC-KE91TB-E	PAC-KE92TB-E
Remarks			* Details on foundation work, duct work, insulation work, electrical wiring, power source switch, and other items shall be referred to the Installation Manual. * Due to continuing improvement, above specifications may be subject to change without notice.			

Notes :

1.Nominal cooling conditions
Indoor:27°CDB/19°CWB(81°FDB/66°FWB), Outdoor:35°CDB(95°FDB)
Pipe length:7.5m(24-9/16ft.), Level difference:0m(0ft.)
2.The values are measured at the rated external static pressure.
3.Nominal heating conditions
Indoor:20°CDB(68°FDB), Outdoor:7°CDB/6°CWB(45°FDB/43°FWB)
Pipe length:7.5m(24-9/16ft.), Level difference:0m(0ft.)
4.The rated external static pressure is shown without < >.The factory setting is the rated value.
5.Measured in anechoic room with a 1m air inlet duct and 2m air outlet duct attached to the unit and 1.5m below the unit.
Refer to 5-1-1 for details.
6.Measured in anechoic room with a 2m air inlet duct and 2m air outlet duct attached to the unit and 1.5m below the unit.
Refer to 5-1-2 for details.

Unit converter

kcal	=kW x 860
BTU/h	=kW x 3,412
cfm	$=m^3$/min x 35.31
lbs	=kg / 0.4536

*Above specification data is subject to rounding variation.

Model			PEFY-P50VMAL-E	PEFY-P63VMAL-E	PEFY-P71VMAL-E	PEFY-P80VMAL-E
Power source			1-phase 220-230-240V 50/60Hz	1-phase 220-230-240V 50/60Hz	1-phase 220-230-240V 50/60Hz	1-phase 220-230-240V 50/60Hz
Cooling capacity (Nominal)	*1	kW	5.6	7.1	8.0	9.0
	*1	kcal / h	4,800	6,100	6,900	7,700
	*1	BTU / h	19,100	24,200	27,300	30,700
	*2 Power input	kW	0.09	0.10	0.12	0.12
	*2 Current input	A	0.63	0.90	1.04	1.04
Heating capacity (Nominal)	*3	kW	6.3	8.0	9.0	10.0
	*3	kcal / h	5,400	6,900	7,700	8,600
	*3	BTU / h	21,500	27,300	30,700	34,100
	*2 Power input	kW	0.09	0.10	0.12	0.12
	*2 Current input	A	0.63	0.90	1.04	1.04
External finish			Galvanized steel plate	Galvanized steel plate	Galvanized steel plate	Galvanized steel plate
External dimension HxWxD		mm	250 x 900 x 732	250 x 1,100 x 732	250 x 1,100 x 732	250 x 1,100 x 732
		inch	9-7/8 x 35-7/16 x 28-7/8	9-7/8 x 43-5/16 x 28-7/8	9-7/8 x 43-5/16 x 28-7/8	9-7/8 x 43-5/16 x 28-7/8
Net weight		kg(lbs)	25(56)	31(69)	31(69)	31(69)
Heat exchanger			Cross fin(Aluminum fin and copper tube)	Cross fin(Aluminum fin and copper tube)	Cross fin(Aluminum fin and copper tube)	Cross fin(Aluminum fin and copper tube)
FAN	Type x Quantity		Sirocco fan x 1	Sirocco fan x 2	Sirocco fan x 2	Sirocco fan x 2
	*4 External static press.	Pa	<35> - 50 - <70> - <100> - <150>	<35> - 50 - <70> - <100> - <150>	<35> - 50 - <70> - <100> - <150>	<35> - 50 - <70> - <100> - <150>
		mmH_2O	<3.6> - 5.1 - <7.1> - <10.2> - <15.3>	<3.6> - 5.1 - <7.1> - <10.2> - <15.3>	<3.6> - 5.1 - <7.1> - <10.2> - <15.3>	<3.6> - 5.1 - <7.1> - <10.2> - <15.3>
	Motor Type		DC brushless motor	DC brushless motor	DC brushless motor	DC brushless motor
	Motor output	kW	0.085	0.121	0.121	0.121
	Driving mechanism		Direct-driven by motor	Direct-driven by motor	Direct-driven by motor	Direct-driven by motor
	Air flow rate		(Low-Mid-High)	(Low-Mid-High)	(Low-Mid-High)	(Low-Mid-High)
		m^3 / min	12.0 - 14.5 - 17.0	13.5 - 16.0 - 19.0	14.5 - 18.0 - 21.0	14.5 - 18.0 - 21.0
		L/s	200 - 242 - 283	225 - 267 - 317	242 - 300 - 350	242 - 300 - 350
		cfm	424 - 512 - 600	477 - 565 - 671	512 - 636 - 742	512 - 636 - 742
Sound pressure level (measured in anechoic room)			(Low-Mid-High)	(Low-Mid-High)	(Low-Mid-High)	(Low-Mid-High)
	*2 *5	dB <A>	28-32-35	29-32-36	30-34-38	30-34-38
	*2 *6	dB <A>	25-29-32	25-29-33	26-29-34	26-29-34
Insulation material			EPS, Polyethylene foam, Urethane foam	EPS, Polyethylene foam, Urethane foam	EPS, Polyethylene foam, Urethane foam	EPS, Polyethylene foam, Urethane foam
Air filter			PP honeycomb fabric.	PP honeycomb fabric.	PP honeycomb fabric.	PP honeycomb fabric.
Protection device			Fuse	Fuse	Fuse	Fuse
Refrigerant control device			LEV	LEV	LEV	LEV
Connectable outdoor unit			R410A CITY MULTI	R410A CITY MULTI	R410A CITY MULTI	R410A CITY MULTI
Diameter of refrigerant pipe	Liquid (R410A)	mm(in.)	6.35(1/4)Brazed	9.52(3/8)Brazed	9.52(3/8)Brazed	9.52(3/8)Brazed
	Gas (R410A)	mm(in.)	12.7(1/2)Brazed	15.88(5/8)Brazed	15.88(5/8)Brazed	15.88(5/8)Brazed
Field drain pipe size		mm(in.)	O.D.32(1-1/4)	O.D.32(1-1/4)	O.D.32(1-1/4)	O.D.32(1-1/4)
Drawing	External		IU-KB94-R548	IU-KB94-R548	IU-KB94-R548	IU-KB94-R548
	Wiring		IU-KB94-R069	IU-KB94-R069	IU-KB94-R069	IU-KB94-R069
	Refrigerant cycle		-	-	-	-
Standard attachment	Document		Installation Manual, Instruction Book	Installation Manual, Instruction Book	Installation Manual, Instruction Book	Installation Manual, Instruction Book
	Accessory		Insulation pipe for refrigerant pipe, Washer, Drain hose, Tie band	Insulation pipe for refrigerant pipe, Washer, Drain hose, Tie band	Insulation pipe for refrigerant pipe, Washer, Drain hose, Tie band	Insulation pipe for refrigerant pipe, Washer, Drain hose, Tie band
Optional parts	Filter box		PAC-KE92TB-E	PAC-KE93TB-E	PAC-KE93TB-E	PAC-KE93TB-E
Remarks			* Details on foundation work, duct work, insulation work, electrical wiring, power source switch, and other items shall be referred to the Installation Manual. * Due to continuing improvement, above specifications may be subject to change without notice.			

Notes :

1.Nominal cooling conditions
Indoor:27°CDB/19°CWB(81°FDB/66°FWB), Outdoor:35°CDB(95°FDB)
Pipe length:7.5m(24-9/16ft.), Level difference:0m(0ft.)
2.The values are measured at the rated external static pressure.
3.Nominal heating conditions
Indoor:20°CDB(68°FDB), Outdoor:7°CDB/6°CWB(45°FDB/43°FWB)
Pipe length:7.5m(24-9/16ft.), Level difference:0m(0ft.)
4.The rated external static pressure is shown without < >.The factory setting is the rated value.
5.Measured in anechoic room with a 1m air inlet duct and 2m air outlet duct attached to the unit and 1.5m below the unit.
Refer to 5-1-1 for details.
6.Measured in anechoic room with a 2m air inlet duct and 2m air outlet duct attached to the unit and 1.5m below the unit.
Refer to 5-1-2 for details.

Unit converter	
kcal	=kW x 860
BTU/h	=kW x 3,412
cfm	$=m^3$/min x 35.31
lbs	=kg / 0.4536

*Above specification data is subject to rounding variation.

Model			PEFY-P100VMAL-E	PEFY-P125VMAL-E	PEFY-P140VMAL-E	
Power source			1-phase 220-230-240V 50/60Hz	1-phase 220-230-240V 50/60Hz	1-phase 220-230-240V 50/60Hz	
Cooling capacity (Nominal)	*1	kW	11.2	14.0	16.0	
	*1	kcal / h	9,600	12,000	13,800	
	*1	BTU / h	38,200	47,800	54,600	
*2	Power input	kW	0.22	0.32	0.34	
*2	Current input	A	1.36	1.94	2.10	
Heating capacity (Nominal)	*3	kW	12.5	16.0	18.0	
	*3	kcal / h	10,800	13,800	15,500	
	*3	BTU / h	42,700	54,600	61,400	
*2	Power input	kW	0.22	0.32	0.34	
*2	Current input	A	1.36	1.94	2.10	
External finish			Galvanized steel plate	Galvanized steel plate	Galvanized steel plate	
External dimension HxWxD		mm	250 x 1,400 x 732	250 x 1,400 x 732	250 x 1,600 x 732	
		inch	9-7/8 x 55-1/8 x 28-7/8	9-7/8 x 55-1/8 x 28-7/8	9-7/8 x 63 x 28-7/8	
Net weight		kg(lbs)	41(91)	41(91)	45(100)	
Heat exchanger			Cross fin(Aluminum fin and copper tube)	Cross fin(Aluminum fin and copper tube)	Cross fin(Aluminum fin and copper tube)	
FAN	Type x Quantity		Sirocco fan x 2	Sirocco fan x 2	Sirocco fan x 2	
*4	External static press.	Pa	<35> - 50 - <70> - <100> - <150>	<35> - 50 - <70> - <100> - <150>	<35> - 50 - <70> - <100> - <150>	
		mmH_2O	<3.6> - 5.1 - <7.1> - <10.2> - <15.3>	<3.6> - 5.1 - <7.1> - <10.2> - <15.3>	<3.6> - 5.1 - <7.1> - <10.2> - <15.3>	
	Motor Type		DC brushless motor	DC brushless motor	DC brushless motor	
	Motor output	kW	0.244	0.244	0.244	
	Driving mechanism		Direct-driven by motor	Direct-driven by motor	Direct-driven by motor	
	Air flow rate		(Low-Mid-High)	(Low-Mid-High)	(Low-Mid-High)	
		m^3 / min	23.0 - 28.0 - 33.0	28.0 - 34.0 - 40.0	29.5 - 35.5 - 42.0	
		L/s	383 - 467 - 550	467 - 567 - 667	492 - 592 - 700	
		cfm	812 - 989 - 1,165	989 - 1,201 - 1,412	1,042 - 1,254 - 1,483	
Sound pressure level (measured in anechoic room)			(Low-Mid-High)	(Low-Mid-High)	(Low-Mid-High)	
	*2 *5	dB <A>	32-37-41	35-40-44	36-41-45	
	*2 *6	dB <A>	28-33-37	32-36-40	33-37-42	
Insulation material			EPS, Polyethylene foam, Urethane foam	EPS, Polyethylene foam, Urethane foam	EPS, Polyethylene foam, Urethane foam	
Air filter			PP honeycomb fabric.	PP honeycomb fabric.	PP honeycomb fabric.	
Protection device			Fuse	Fuse	Fuse	
Refrigerant control device			LEV	LEV	LEV	
Connectable outdoor unit		*5	R410A CITY MULTI	R410A CITY MULTI	R410A CITY MULTI	
Diameter of refrigerant pipe	Liquid (R410A)	mm(in.)	9.52(3/8)Brazed	9.52(3/8)Brazed	9.52(3/8)Brazed	
	Gas (R410A)	mm(in.)	15.88(5/8)Brazed	15.88(5/8)Brazed	15.88(5/8)Brazed	
Field drain pipe size		mm(in.)	O.D.32(1-1/4)	O.D.32(1-1/4)	O.D.32(1-1/4)	
Drawing	External		IU-KB94-R548	IU-KB94-R548	IU-KB94-R548	
	Wiring		IU-KB94-R069	IU-KB94-R069	IU-KB94-R069	
	Refrigerant cycle		-	-	-	
Standard attachment	Document		Installation Manual, Instruction Book	Installation Manual, Instruction Book	Installation Manual, Instruction Book	
	Accessory		Insulation pipe for refrigerant pipe, Washer, Drain hose, Tie band	Insulation pipe for refrigerant pipe, Washer, Drain hose, Tie band	Insulation pipe for refrigerant pipe, Washer, Drain hose, Tie band	
Optional parts	Filter box		PAC-KE94TB-E	PAC-KE94TB-E	PAC-KE95TB-E	
Remarks			* Details on foundation work, duct work, insulation work, electrical wiring, power source switch, and other items shall be referred to the Installation Manual. * Due to continuing improvement, above specifications may be subject to change without notice.			

Notes :

1.Nominal cooling conditions
Indoor:27°CDB/19°CWB(81°FDB/66°FWB), Outdoor:35°CDB(95°FDB)
Pipe length:7.5m(24-9/16ft.), Level difference:0m(0ft.)
2.The values are measured at the rated external static pressure.
3.Nominal heating conditions
Indoor:20°CDB(68°FDB), Outdoor:7°CDB/6°CWB(45°FDB/43°FWB)
Pipe length:7.5m(24-9/16ft.), Level difference:0m(0ft.)
4.The rated external static pressure is shown without < >.The factory setting is the rated value.
5.Measured in anechoic room with a 1m air inlet duct and 2m air outlet duct attached to the unit and 1.5m below the unit.
Refer to 5-1-1 for details.
6.Measured in anechoic room with a 2m air inlet duct and 2m air outlet duct attached to the unit and 1.5m below the unit.
Refer to 5-1-2 for details.

Unit converter	
kcal	=kW x 860
BTU/h	=kW x 3,412
cfm	$=m^3$/min x 35.31
lbs	=kg / 0.4536

*Above specification data is subject to rounding variation.

PEFY-P20, 25, 32, 40, 50, 63, 71, 80, 100, 125, 140VMA-E

Unit : mm

Note 1. Use M10 screw for the Suspension bolt (field supply).
2. Keep the service space for the maintenance at the bottom.
3. This chart indicates for PEFY-P63·71·80·100·125·140VMA-E models, which have 2 fans. PEFY-P20·25·32·40·50VMA-E models have 1 fan.
4. In case of the inlet duct is used, remove the air filter (supply with the unit), then install the filter (field supply) at suction side.

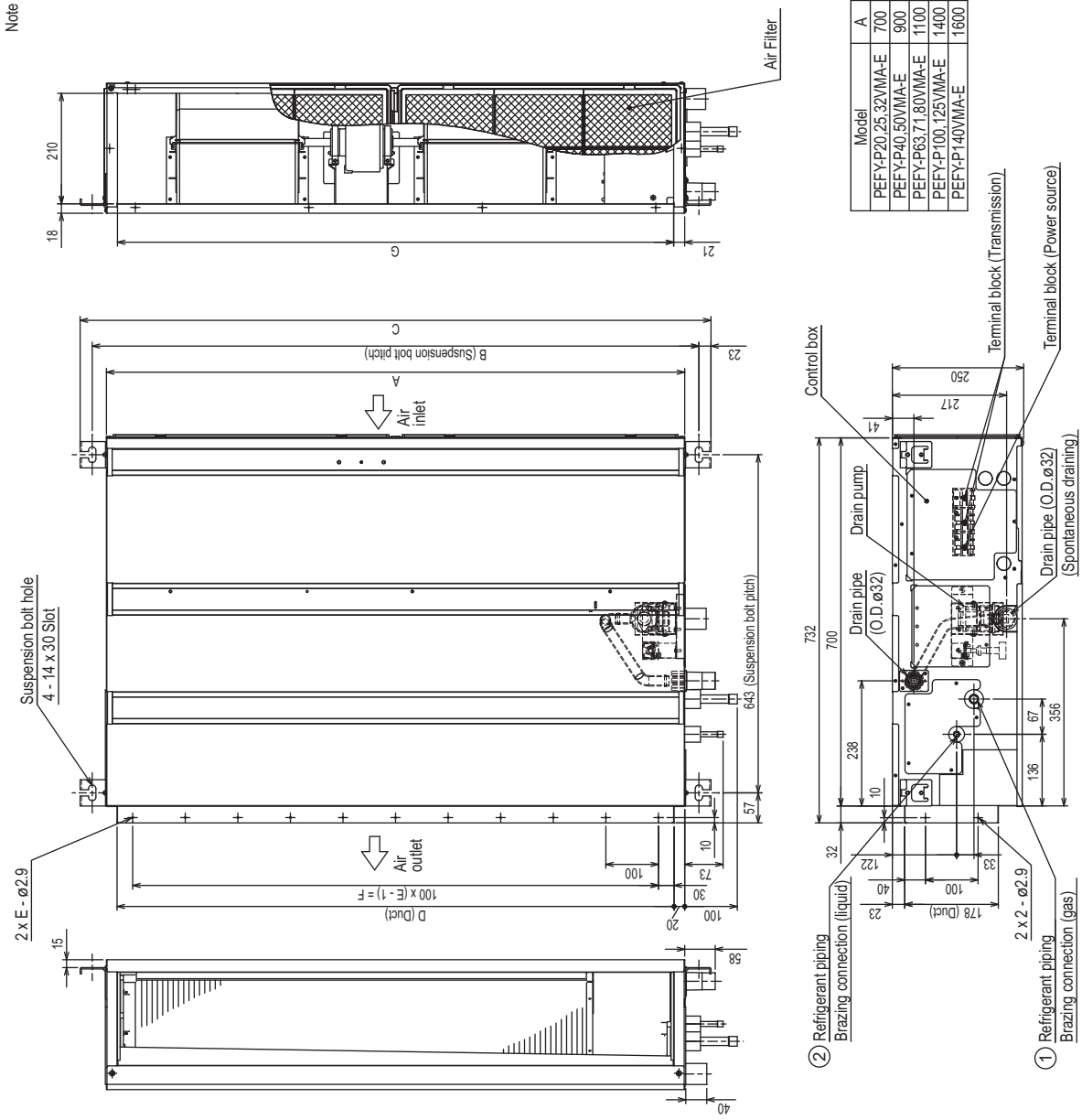

Model	A	B	C	D	E	F	G	① Gas pipe	② Liquid pipe
PEFY-P20,25,32VMA-E	700	754	800	660	7	600	658	ø12.7	ø6.35
PEFY-P40,50VMA-E	900	954	1000	860	9	800	858		
PEFY-P63,71,80VMA-E	1100	1154	1200	1060	11	1000	1058	ø15.88	ø9.52
PEFY-P100,125VMA-E	1400	1454	1500	1360	14	1300	1358		
PEFY-P140VMA-E	1600	1654	1700	1560	16	1500	1558		

PEFY-P20, 25, 32, 40, 50, 63, 71, 80, 100, 125, 140VMA-E

Unit : mm

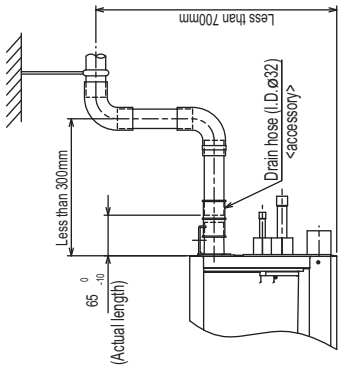

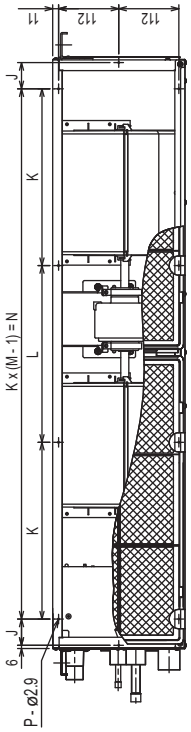

Model	H	J	K	L	M	N	P
PEFY-P20,25,32VMA-E	800	44	150	300			10
PEFY-P40VMA-E	1000	54	260		4	780	10
PEFY-P50VMA-E							
PEFY-P63,71,80VMA-E	1200	49	330		4	990	10
PEFY-P100,125VMA-E	1500	54	320		5	1280	12
PEFY-P140VMA-E	1700	54	370		5	1480	12

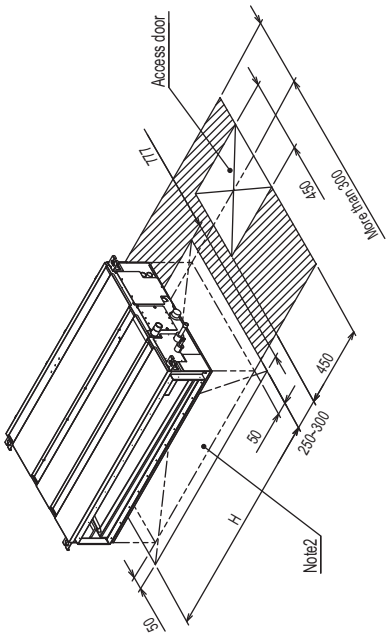

Required space for service and maintenance

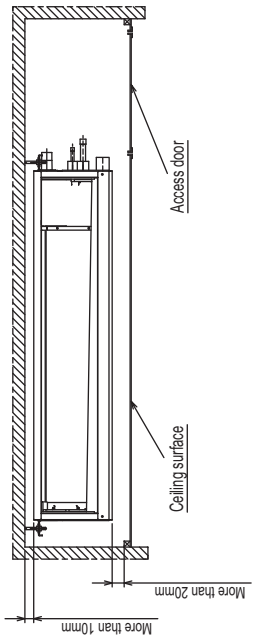

Make the access door at the appointed position properly for service maintenance.

PEFY-

PEFY-P20, 25, 32, 40, 50, 63, 71, 80, 100, 125, 140VMA-E with filter box

Unit : mm

Note 1. Use M10 screw for the Suspension bolt (field supply).
2. Keep the service space for the maintenance at the bottom.
3. This chart indicates for PEFY-P63·71·80·100·125·140VMA-E models, which have 2 fans. PEFY-P20·25·32·40·50VMA-E models have 1 fan.
4. Use air filter installed with indoor unit.

Model	① Gas pipe	② Liquid pipe	③ Filter box
PEFY-P20,25,32VMA-E	ø12.7	ø6.35	PAC-KE91TB-E
PEFY-P40,50VMA-E			PAC-KE92TB-E
PEFY-P63,71,80VMA-E	ø15.88	ø9.52	PAC-KE93TB-E
PEFY-P100,125VMA-E			PAC-KE94TB-E
PEFY-P140VMA-E			PAC-KE95TB-E

Model	A	B	C	D	E	F	G	H	J
PEFY-P20,25,32VMA-E	700	754	800	660	7	600	658	7	600
PEFY-P40,50VMA-E	900	954	1000	860	9	800	858	9	800
PEFY-P63,71,80VMA-E	1100	1154	1200	1060	11	1000	1058	11	1000
PEFY-P100,125VMA-E	1400	1454	1500	1360	14	1300	1358	14	1300
PEFY-P140VMA-E	1600	1654	1700	1560	16	1500	1558	16	1500

<Suction filetr box built-in specification>

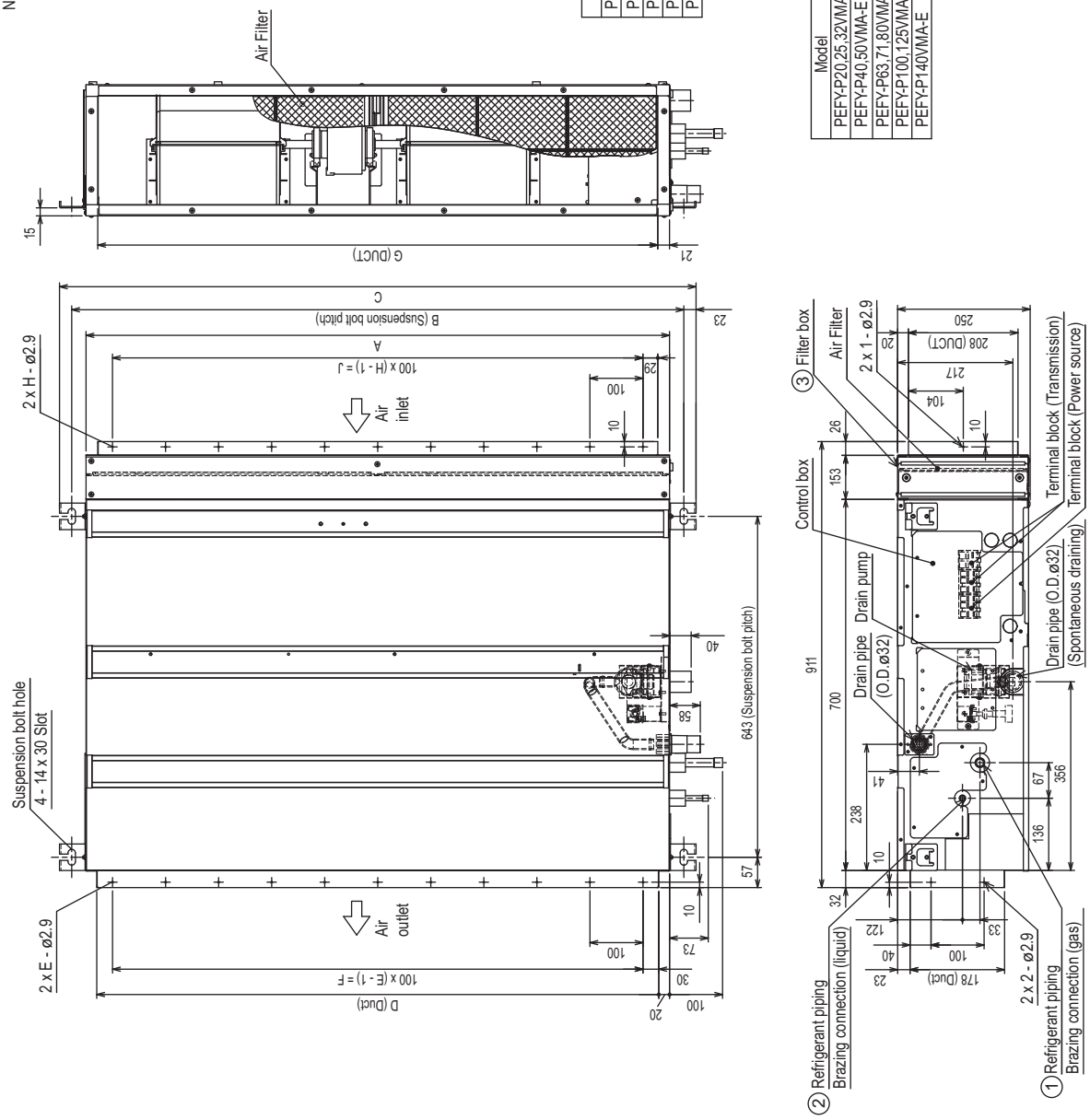

PEFY-P20, 25, 32, 40, 50, 63, 71, 80, 100, 125, 140VMA-E with filter box

Unit : mm

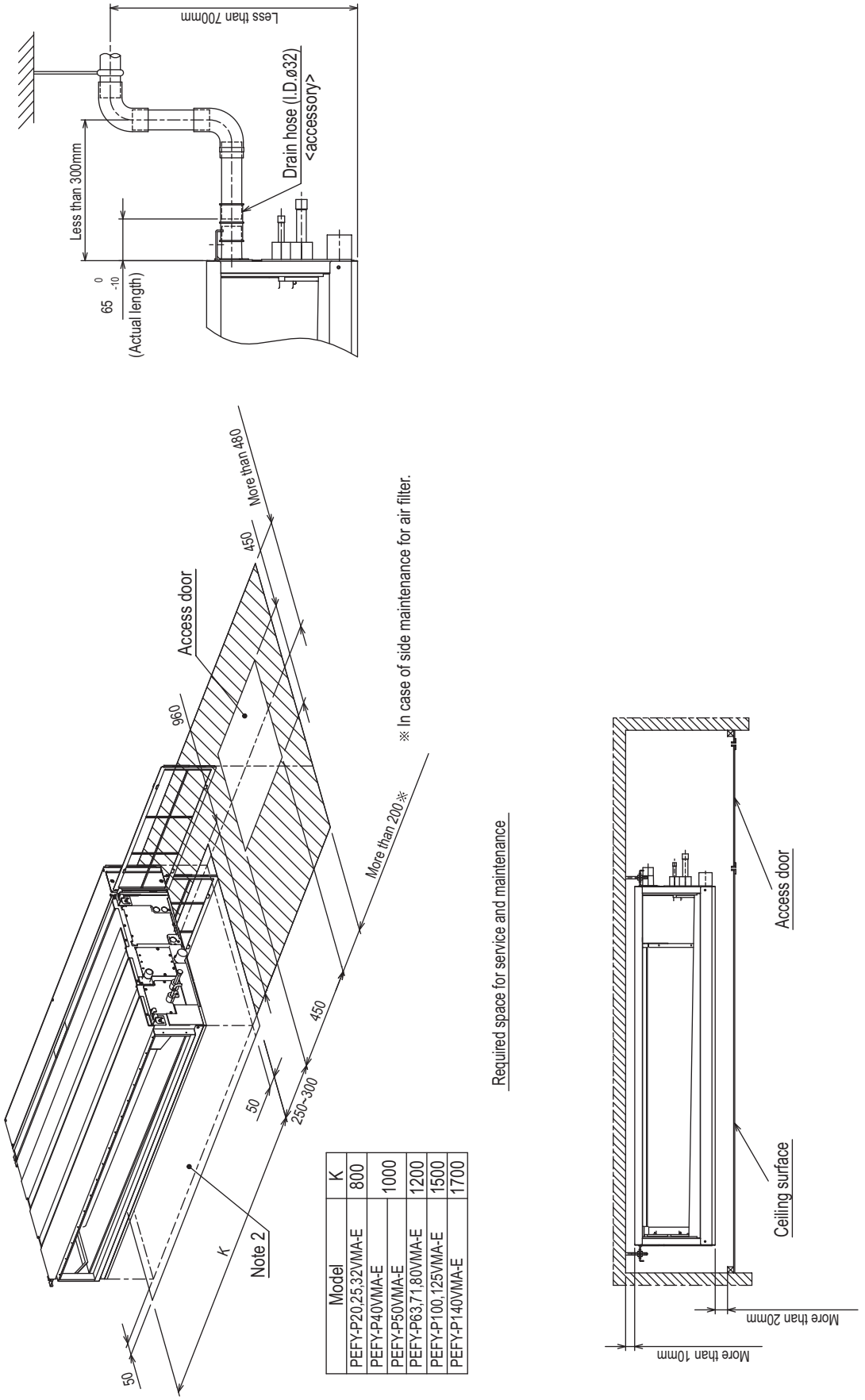

Model	K
PEFY-P20,25,32VMA-E	800
PEFY-P40VMA-E	1000
PEFY-P50VMA-E	
PEFY-P63,71,80VMA-E	1200
PEFY-P100,125VMA-E	1500
PEFY-P140VMA-E	1700

PEFY-P20, 25, 32, 40, 50, 63, 71, 80, 100, 125, 140VMAL-E

Unit : mm

Note 1. Use M10 screw for the Suspension bolt (field supply).
2. Keep the service space for the maintenance at the bottom.
3. This chart indicates for PEFY-P63·71·80·100·125·140VMAL-E models, which have 2 fans. PEFY-P20·25·32·40·50VMAL-E models have 1 fan.
4. In case of the inlet duct is used, remove the air filter (supply with the unit), then install the filter (field supply) at suction side.

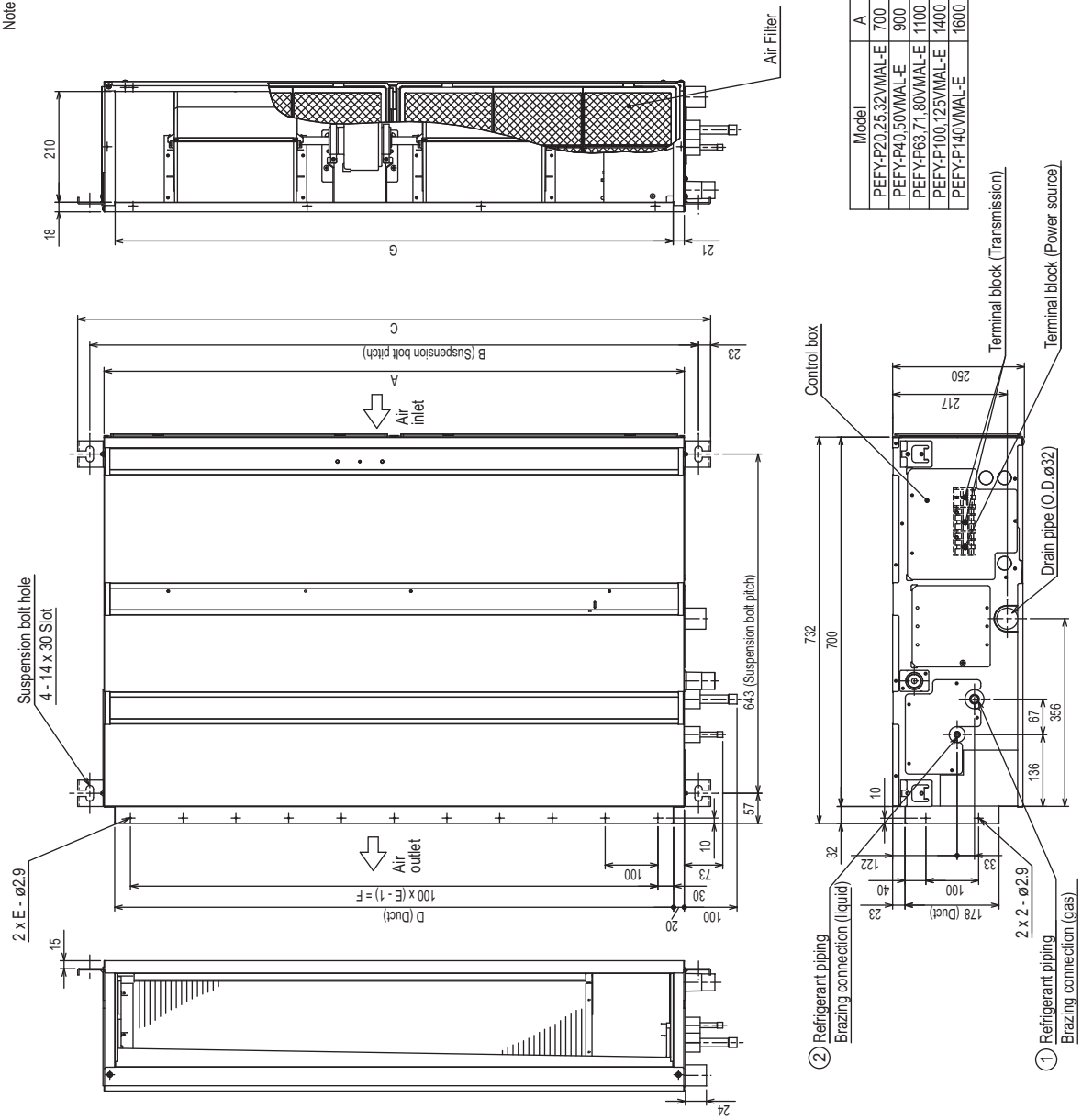

Model	A	B	C	D	E	F	G	①Gas pipe	②Liquid pipe
PEFY-P20,25,32VMAL-E	700	754	800	660	7	600	658	ø12.7	ø6.35
PEFY-P40,50VMAL-E	900	954	1000	860	9	800	858		
PEFY-P63,71,80VMAL-E	1100	1154	1200	1060	11	1000	1058	ø15.88	ø9.52
PEFY-P100,125VMAL-E	1400	1454	1500	1360	14	1300	1358		
PEFY-P140VMAL-E	1600	1654	1700	1560	16	1500	1558		

PEFY-P20, 25, 32, 40, 50, 63, 71, 80, 100, 125, 140VMAL-E

Unit : mm

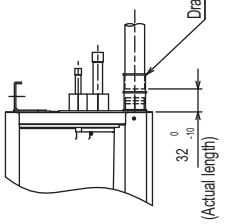

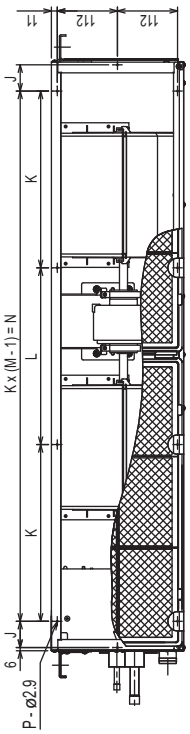

Model	H	J	K	L	M	N	P
PEFY-P20,25,32VMAL-E	800	44	150	300			10
PEFY-P40VMAL-E	1000	54	260		4	780	10
PEFY-P50VMAL-E							
PEFY-P63,71,80VMAL-E	1200	49	330		4	990	10
PEFY-P100,125VMAL-E	1500	54	320		5	1280	12
PEFY-P140VMAL-E	1700	54	370		5	1480	12

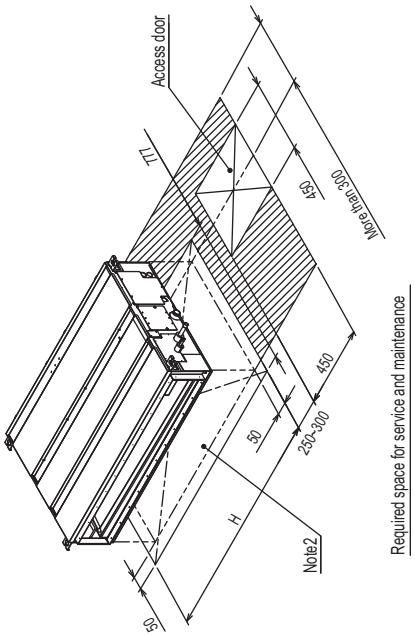

Required space for service and maintenance

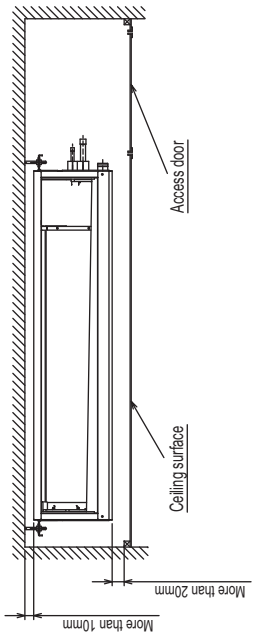

Make the access door at the appointed position properly for service maintenance.

PEFY-P20, 25, 32, 40, 50, 63, 71, 80, 100, 125, 140VMAL-E with filter box

Unit : mm

Note 1. Use M10 screw for the Suspension bolt (field supply).
2. Keep the service space for the maintenance at the bottom.
3. This chart indicates for PEFY-P63·71·80·100·125·140VMAL-E models, which have 2 fans. PEFY-P20·25·32·40·50VMAL-E models have 1 fan.
4. Use air filter installed with indoor unit.

Model	① Gas pipe	② Liquid pipe	③ Filter box
PEFY-P20,25,32VMAL-E	ø12.7	ø6.35	PAC-KE91TB-E
PEFY-P40,50VMAL-E			PAC-KE92TB-E
PEFY-P63,71,80VMAL-E	ø15.88	ø9.52	PAC-KE93TB-E
PEFY-P100,125VMAL-E			PAC-KE94TB-E
PEFY-P140VMAL-E			PAC-KE95TB-E

Model	A	B	C	D	E	F	G	H	J
PEFY-P20,25,32VMAL-E	700	754	800	660	7	600	658	7	600
PEFY-P40,50VMAL-E	900	954	1000	860	9	800	858	9	800
PEFY-P63,71,80VMAL-E	1100	1154	1200	1060	11	1000	1058	11	1000
PEFY-P100,125VMAL-E	1400	1454	1500	1360	14	1300	1358	14	1300
PEFY-P140VMAL-E	1600	1654	1700	1560	16	1500	1558	16	1500

<Suction filetr box built-in specification>

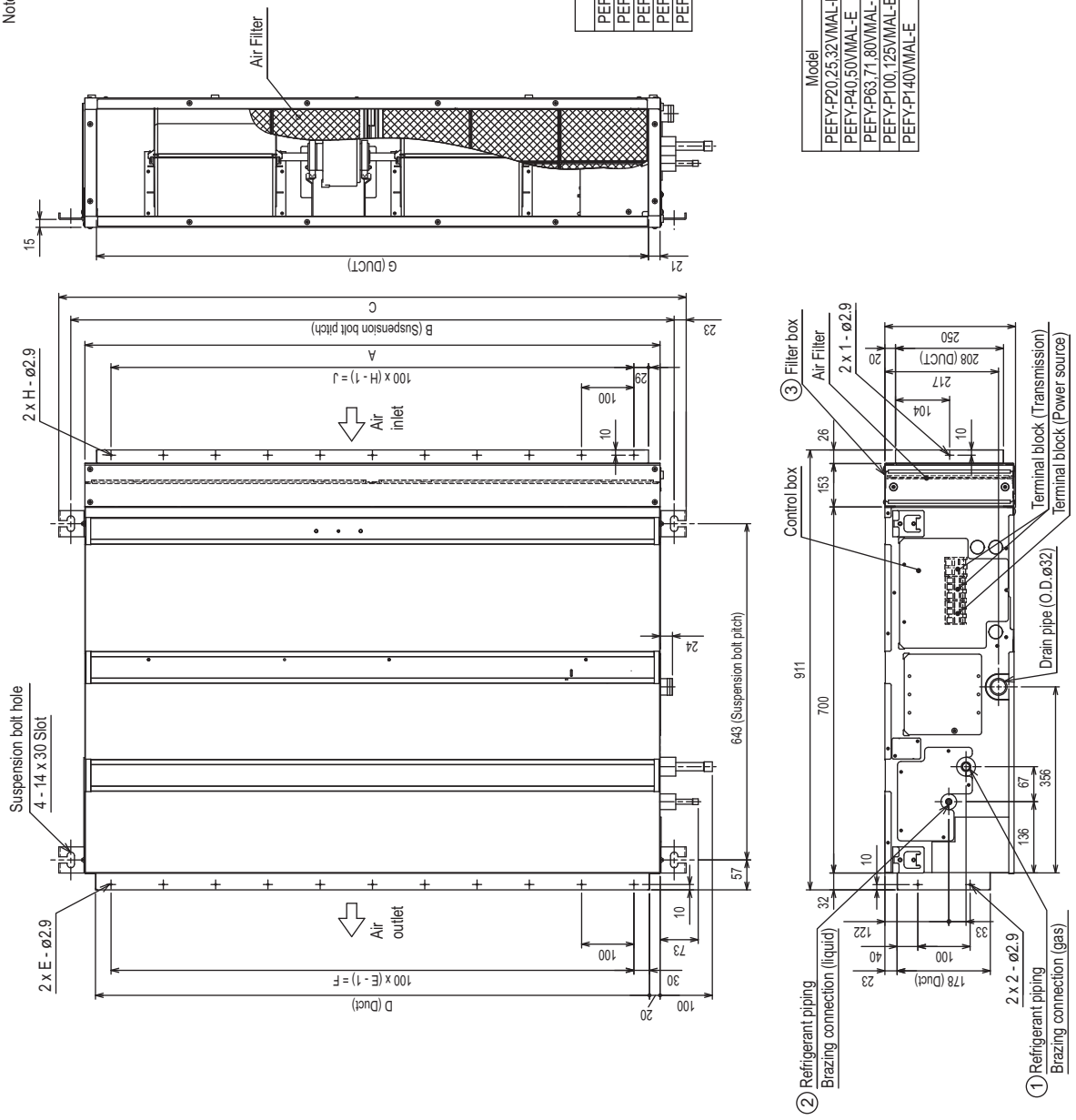

PEFY-P20, 25, 32, 40, 50, 63, 71, 80, 100, 125, 140VMAL-E with filter box

Unit : mm

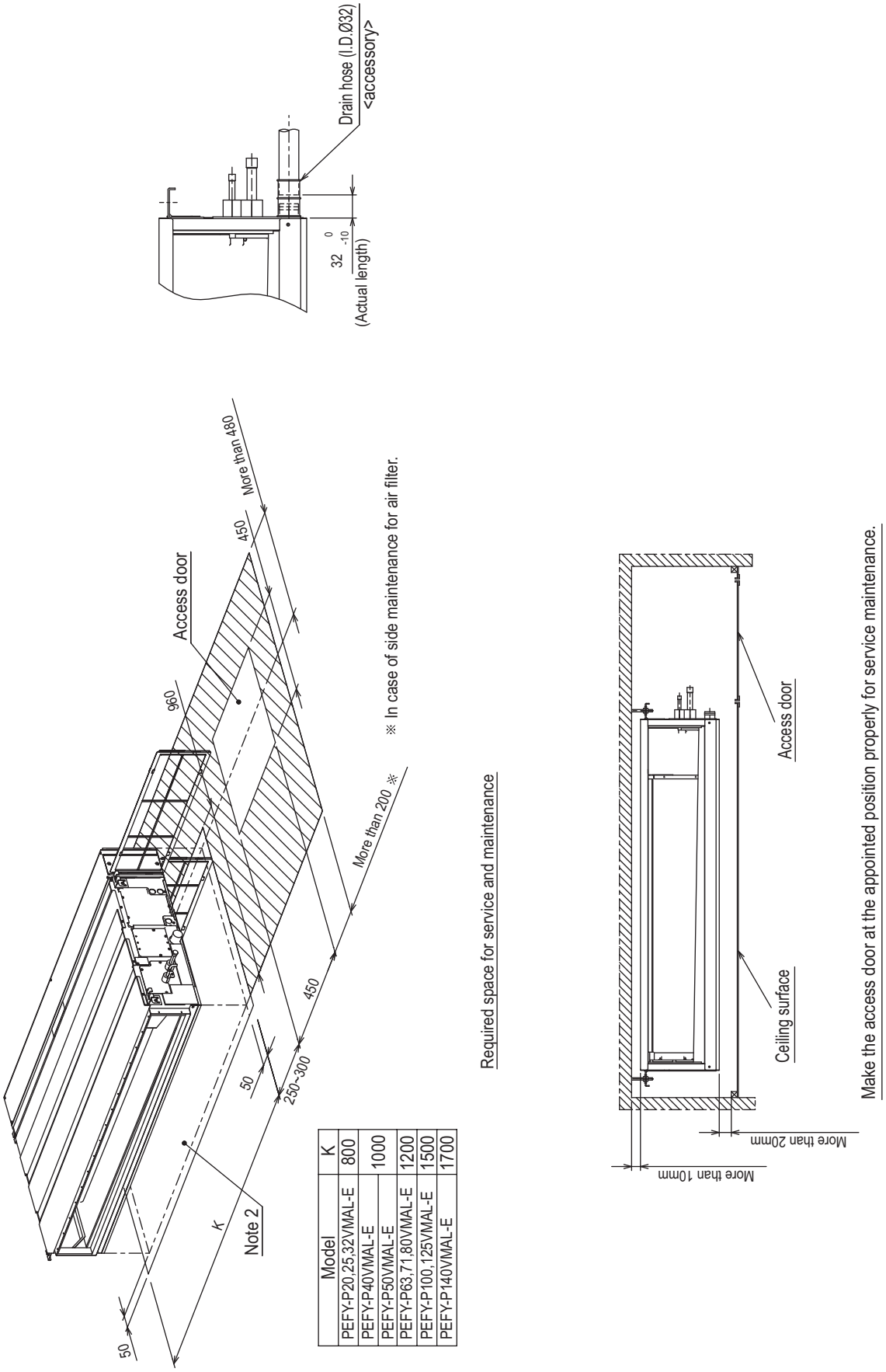

Model	K
PEFY-P20,25,32VMAL-E	800
PEFY-P40VMAL-E	1000
PEFY-P50VMAL-E	
PEFY-P63,71,80VMAL-E	1200
PEFY-P100,125VMAL-E	1500
PEFY-P140VMAL-E	1700

PEFY-P20, 25, 32, 40, 50, 63, 71, 80, 100, 125, 140VMA(L)-E

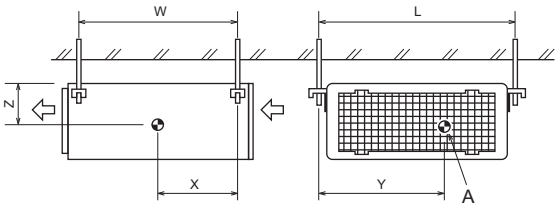

A : Center of gravity

(mm)[in]

Model name	W	L	X	Y	Z
PEFY-P20VMA(L)-E	643 [25 - 6/16]	754 [29 - 11/16]	330 [13]	300 [11 -13/16]	130 [5 -2/16]
PEFY-P25VMA(L)-E	643 [25 - 6/16]	754 [29 - 11/16]	330 [13]	300 [11 -13/16]	130 [5 -2/16]
PEFY-P32VMA(L)-E	643 [25 - 6/16]	754 [29 - 11/16]	330 [13]	300 [11 -13/16]	130 [5 -2/16]
PEFY-P40VMA(L)-E	643 [25 - 6/16]	954 [37 - 9/16]	340 [13 - 7/16]	375 [14 -13/16]	130 [5 -2/16]
PEFY-P50VMA(L)-E	643 [25 - 6/16]	954 [37 - 9/16]	340 [13 - 7/16]	375 [14 -13/16]	130 [5 -2/16]
PEFY-P63VMA(L)-E	643 [25 - 6/16]	1154 [45 - 7/16]	325 [12 - 13/16]	525 [20 -11/16]	130 [5 -2/16]
PEFY-P71VMA(L)-E	643 [25 - 6/16]	1154 [45 - 7/16]	325 [12 - 13/16]	525 [20 -11/16]	130 [5 -2/16]
PEFY-P80VMA(L)-E	643 [25 - 6/16]	1154 [45 - 7/16]	325 [12 - 13/16]	525 [20 -11/16]	130 [5 -2/16]
PEFY-P100VMA(L)-E	643 [25 - 6/16]	1454 [57 - 4/16]	330 [13]	675 [26 -10/16]	130 [5 -2/16]
PEFY-P125VMA(L)-E	643 [25 - 6/16]	1454 [57 - 4/16]	330 [13]	675 [26 -10/16]	130 [5 -2/16]
PEFY-P140VMA(L)-E	643 [25 - 6/16]	1654 [65 - 2/16]	332 [13 - 2/16]	725 [28 -9/16]	130 [5 -2/16]

PEFY-P20, 25, 32, 40, 50, 63, 71, 80, 100, 125, 140VMA(L)-E

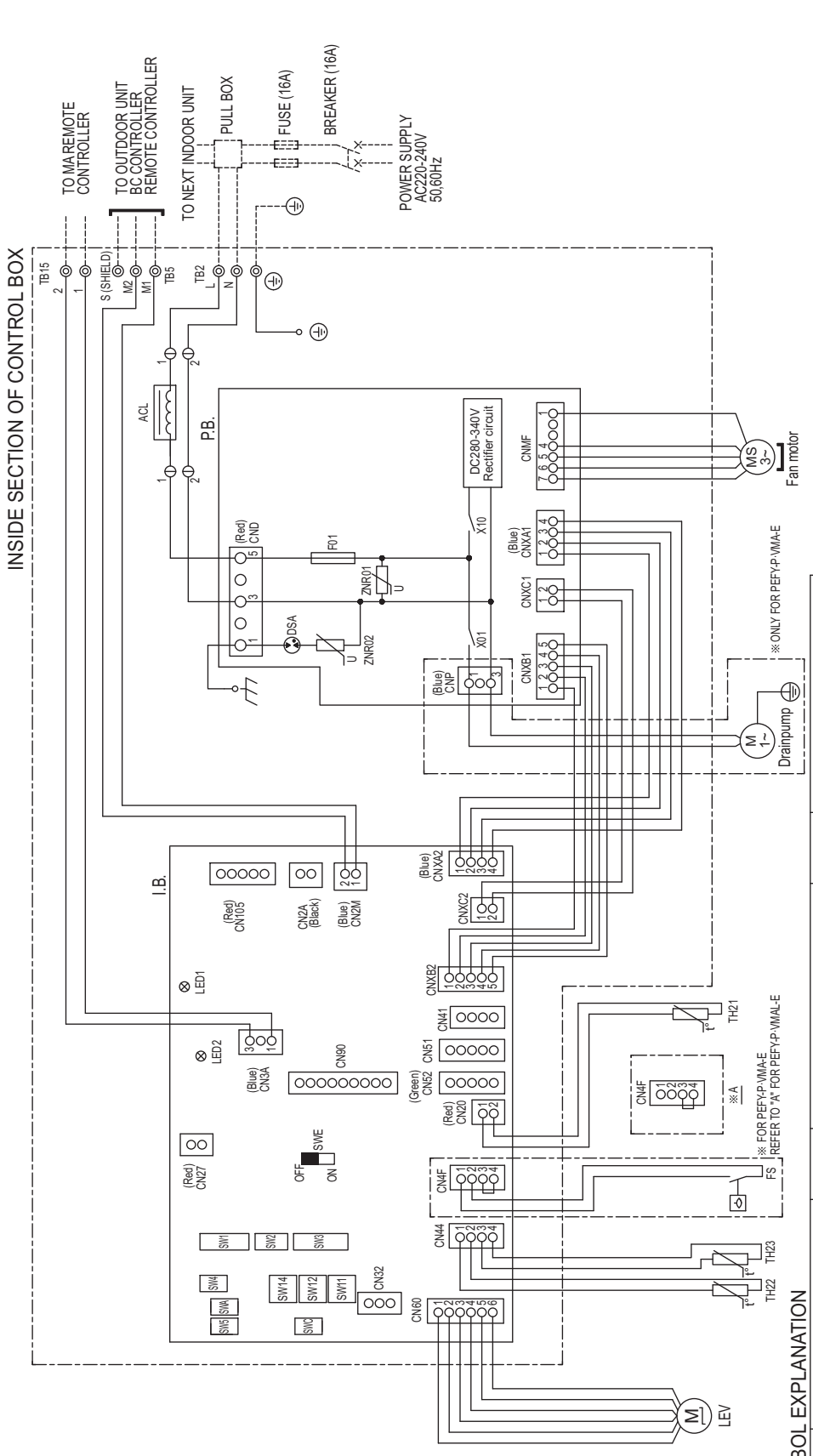

NOTE: 1. The wirings to TB2, TB5, TB15 shown in dotted line are field work.
2. Mark ◎ indicates terminal block, ⊕ connector.

SYMBOL EXPLANATION

SYMBOL	NAME	SYMBOL	NAME	SYMBOL	NAME
I.B.	Indoor controller board	CN41	Connector (HA terminal-A)	SW4 (I.B.)	Switch (for model selection)
P.B.	Power supply board	CN51	Connector (Centrally control)	SW5 (I.B.)	Switch (for mode selection)
TB2	Power source terminal block	CN52	Connector (Remote indication)	SW11 (I.B.)	Switch (1s digit address set)
TB5	Transmission terminal block	CN90	Connector (Wireless)	SW12 (I.B.)	Switch (10ths digit address set)
TB15	Transmission terminal block	CN105	Connector (IT terminal)	SW14 (I.B.)	Switch (BRANCH No.)
F01	Fuse AC250V 6.3A	CN2A	Connector (0-10V Analog input)	SWA (I.B.)	Switch (for static pressure selection)
ZNR01,02	Varistor	FS	Float switch	SWC (I.B.)	Switch (for static pressure selection)
DSA	Arrester	TH21	Thermistor (inlet air temp. detection)	SWE (I.B.)	Connector (emergency operation)
X01	Aux. relay	TH22	Thermistor (piping temp. detection/liquid)	LED1	LED (Power supply)
X10	Aux. relay	TH23	Thermistor (piping temp. detection/gas)	LED2	LED (Remote controller supply)
ACL	AC reactor (Power factor improvement)	SW1 (I.B.)	Switch (for mode selection)		
CN27	Connector (Damper)	SW2 (I.B.)	Switch (for capacity code)		
CN32	Connector (Remote switch)	SW3 (I.B.)	Switch (for mode selection)		

5. SOUND LEVELS

5-1. Sound levels

5-1-1. Sound levels (Measured point : With 1m air inlet duct and 2m air outlet duct)

PEFY-P-VMA(L)-E

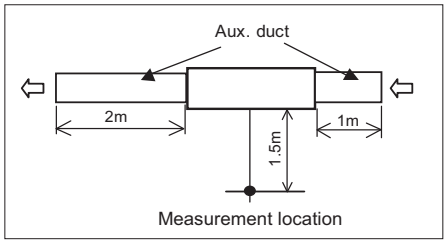

* Measured in anechoic room.

Sound level at anechoic room : Low-Mid-High

Model	Sound level dB(A)				
	35Pa	50Pa	70Pa	100Pa	150Pa
PEFY-P20VMA(L)-E	26-27-28	26-28-29	26-29-31	27-30-33	28-33-37
PEFY-P25VMA(L)-E	26-27-28	26-28-29	26-29-31	27-30-33	28-33-37
PEFY-P32VMA(L)-E	28-30-34	28-30-34	29-32-36	29-33-37	31-35-40
PEFY-P40VMA(L)-E	28-30-34	28-30-34	29-32-36	29-33-37	32-36-40
PEFY-P50VMA(L)-E	28-31-35	28-32-35	29-33-37	30-34-38	32-37-41
PEFY-P63VMA(L)-E	29-32-35	29-32-36	30-33-38	31-35-39	33-38-41
PEFY-P71VMA(L)-E	30-33-37	30-34-38	31-36-39	33-37-41	36-41-44
PEFY-P80VMA(L)-E	30-33-37	30-34-38	31-36-39	33-37-41	36-41-44
PEFY-P100VMA(L)-E	31-36-40	32-37-41	33-38-42	35-39-43	37-42-45
PEFY-P125VMA(L)-E	35-40-44	35-40-44	37-41-45	38-42-46	39-44-47
PEFY-P140VMA(L)-E	36-41-45	36-41-45	38-42-46	39-43-47	40-45-48

5-1-2. Sound levels (Measured point : With 2m air inlet duct and 2m air outlet duct)

PEFY-P-VMA(L)-E

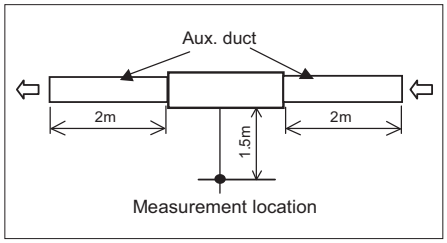

* Measured in anechoic room.

Sound level at anechoic room : Low-Mid-High

Model	Sound level dB(A)				
	35Pa	50Pa	70Pa	100Pa	150Pa
PEFY-P20VMA(L)-E	23-24-25	23-25-26	23-26-28	24-27-30	25-30-34
PEFY-P25VMA(L)-E	23-24-25	23-25-26	23-26-28	24-27-30	25-30-34
PEFY-P32VMA(L)-E	23-25-28	23-26-29	24-27-30	25-28-32	28-32-36
PEFY-P40VMA(L)-E	23-26-29	23-27-30	24-28-31	26-29-33	29-33-37
PEFY-P50VMA(L)-E	24-28-31	25-29-32	26-30-33	27-31-34	29-34-38
PEFY-P63VMA(L)-E	25-28-32	25-29-33	26-30-34	27-31-35	29-34-38
PEFY-P71VMA(L)-E	26-29-33	26-29-34	26-30-35	29-33-37	32-37-41
PEFY-P80VMA(L)-E	26-29-33	26-29-34	26-30-35	29-33-37	32-37-41
PEFY-P100VMA(L)-E	28-32-36	28-33-37	30-35-39	31-36-40	33-38-43
PEFY-P125VMA(L)-E	31-35-39	32-36-40	32-37-41	33-39-42	37-40-44
PEFY-P140VMA(L)-E	31-35-40	33-37-42	34-38-43	35-39-44	37-41-45

5-2. NC curves

5-2-1. NC curves (Sound level measured point : With 1m air inlet duct and 2m air outlet duct)

PEFY-P20,25VMA(L)-E

External Static Pressure: 35Pa
Power Source: 220-240V(50/60Hz)

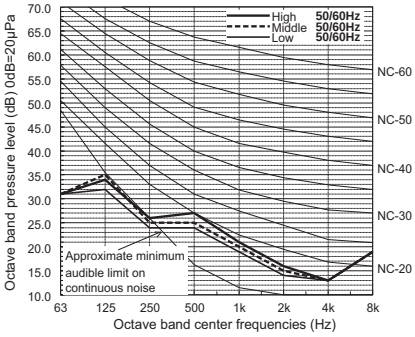

PEFY-P20,25VMA(L)-E

External Static Pressure: 50Pa
Power Source: 220-240V(50/60Hz)

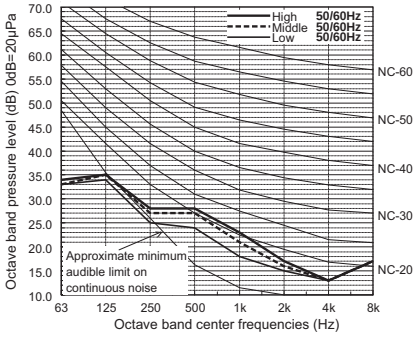

PEFY-P20,25VMA(L)-E

External Static Pressure: 70Pa
Power Source: 220-240V(50/60Hz)

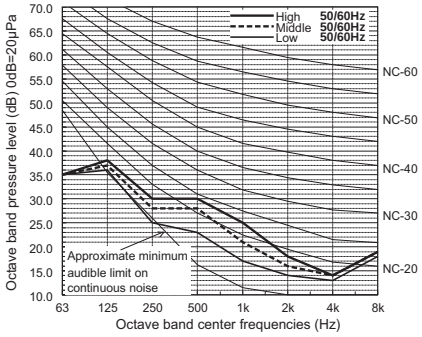

PEFY-P20,25VMA(L)-E

External Static Pressure: 100Pa
Power Source: 220-240V(50/60Hz)

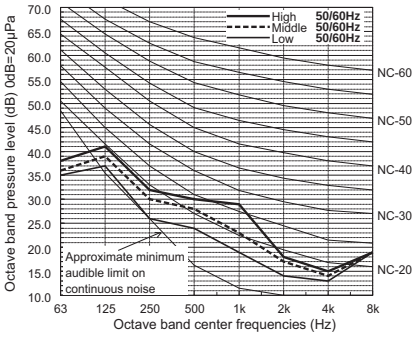

PEFY-P20,25VMA(L)-E

External Static Pressure: 150Pa
Power Source: 220-240V(50/60Hz)

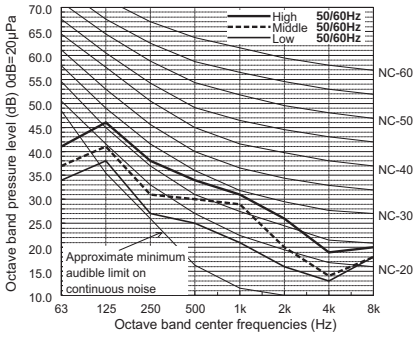

PEFY-P32VMA(L)-E

External Static Pressure: 35Pa
Power Source: 220-240V(50/60Hz)

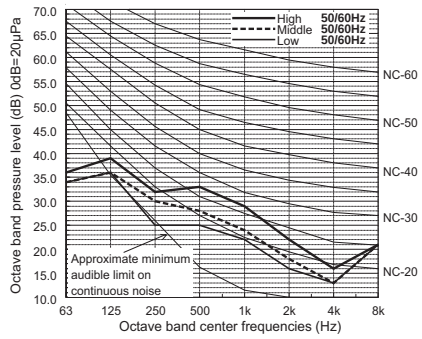

PEFY-P32VMA(L)-E

External Static Pressure: 50Pa
Power Source: 220-240V(50/60Hz)

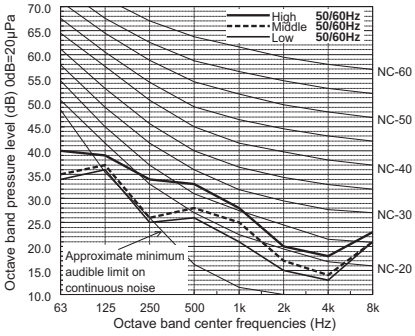

PEFY-P32VMA(L)-E

External Static Pressure: 70Pa
Power Source: 220-240V(50/60Hz)

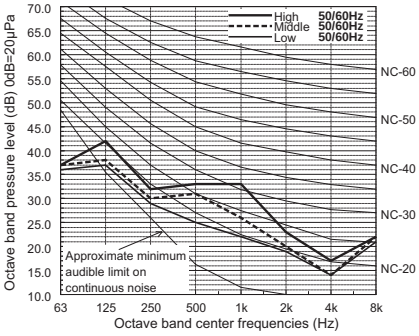

PEFY-P32VMA(L)-E

External Static Pressure: 100Pa
Power Source: 220-240V(50/60Hz)

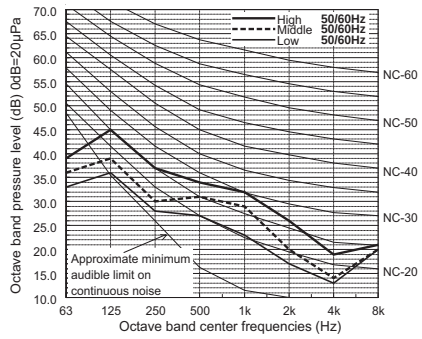

PEFY-P32VMA(L)-E

External Static Pressure: 150Pa
Power Source: 220-240V(50/60Hz)

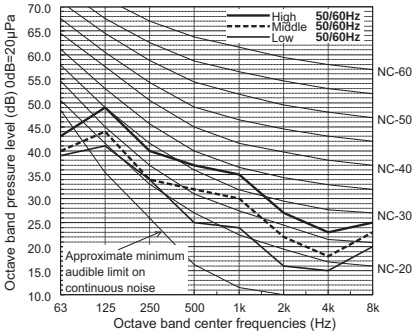

PEFY-P40VMA(L)-E

External Static Pressure: 35Pa
Power Source: 220-240V(50/60Hz)

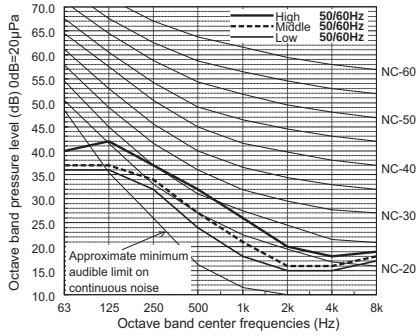

PEFY-P40VMA(L)-E

External Static Pressure: 50Pa
Power Source: 220-240V(50/60Hz)

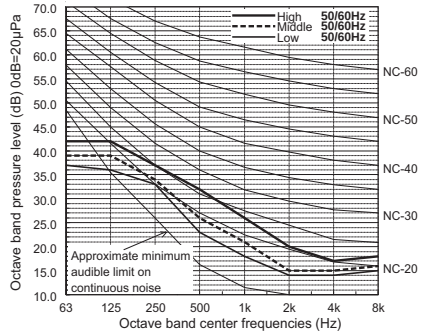

PEFY-P40VMA(L)-E

External Static Pressure: 70Pa
Power Source: 220-240V(50/60Hz)

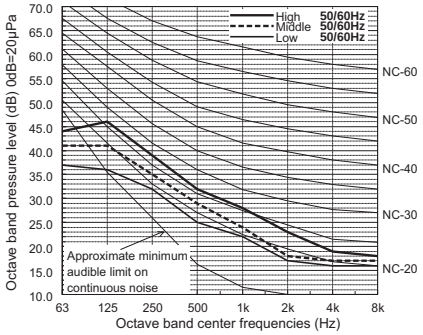

PEFY-P40VMA(L)-E

External Static Pressure: 100Pa
Power Source: 220-240V(50/60Hz)

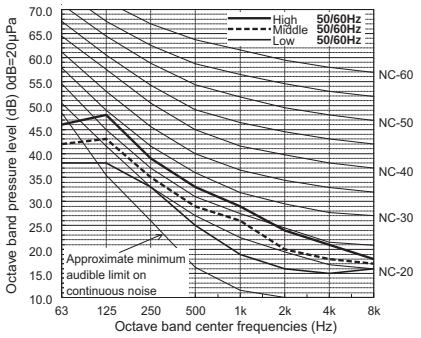

PEFY-P40VMA(L)-E

External Static Pressure: 150Pa
Power Source: 220-240V(50/60Hz)

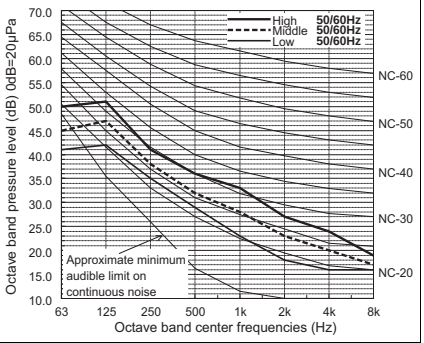

PEFY-P50VMA(L)-E

External Static Pressure: 35Pa
Power Source: 220-240V(50/60Hz)

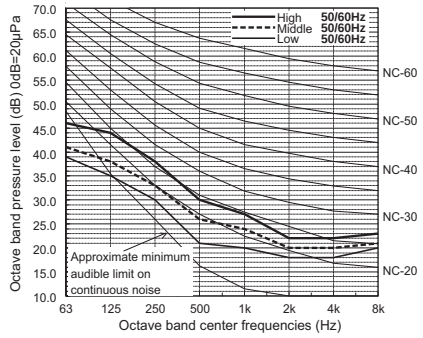

PEFY-P50VMA(L)-E

External Static Pressure: 50Pa
Power Source: 220-240V(50/60Hz)

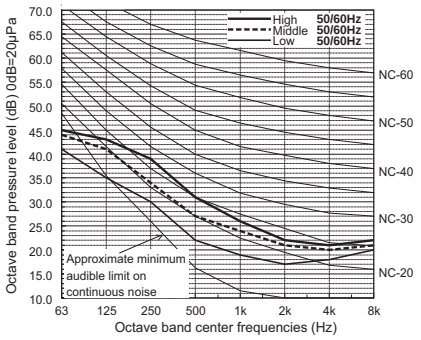

PEFY-P50VMA(L)-E

External Static Pressure: 70Pa
Power Source: 220-240V(50/60Hz)

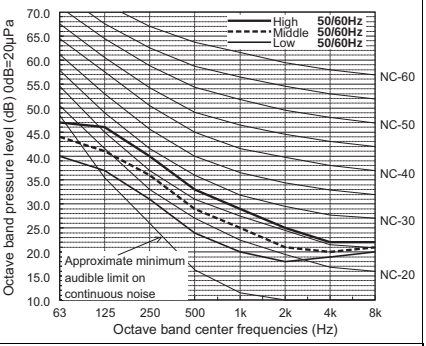

PEFY-P50VMA(L)-E

External Static Pressure: 100Pa
Power Source: 220-240V(50/60Hz)

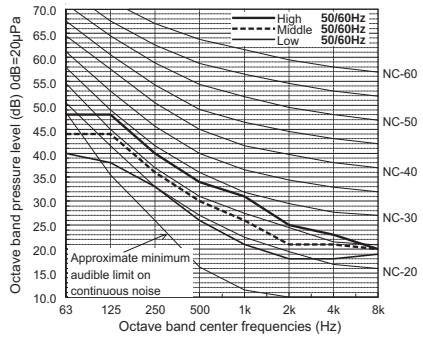

PEFY-P50VMA(L)-E

External Static Pressure: 150Pa
Power Source: 220-240V(50/60Hz)

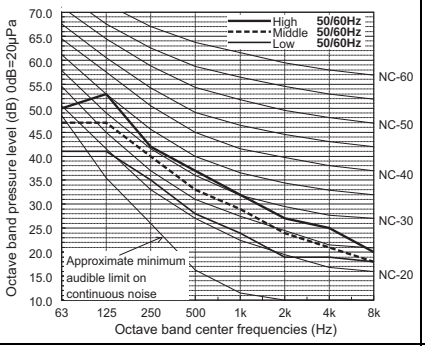

PEFY-P63VMA(L)-E

External Static Pressure: 35Pa
Power Source: 220-240V(50/60Hz)

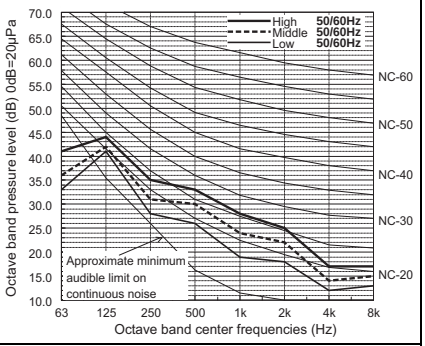

PEFY-P63VMA(L)-E

External Static Pressure: 50Pa
Power Source: 220-240V(50/60Hz)

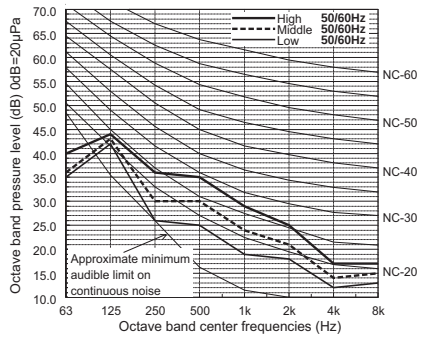

PEFY-P63VMA(L)-E

External Static Pressure: 70Pa
Power Source: 220-240V(50/60Hz)

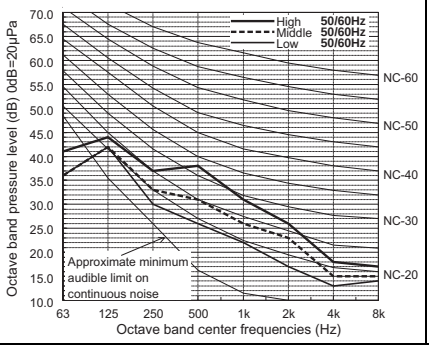

PEFY-P63VMA(L)-E

External Static Pressure: 100Pa
Power Source: 220-240V(50/60Hz)

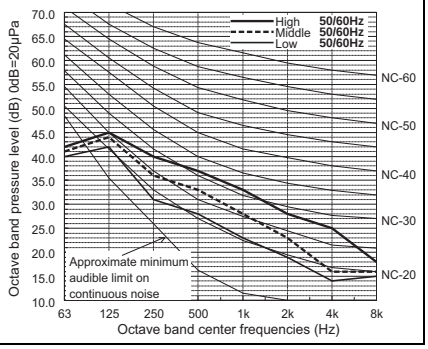

PEFY-P63VMA(L)-E

External Static Pressure: 150Pa
Power Source: 220-240V(50/60Hz)

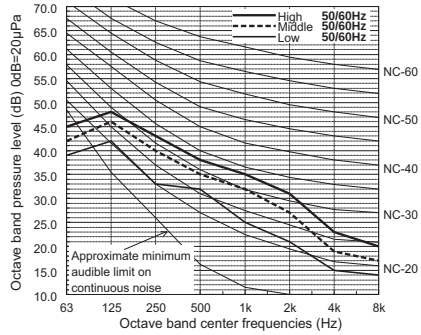

PEFY-P71,80VMA(L)-E

External Static Pressure: 35Pa
Power Source: 220-240V(50/60Hz)

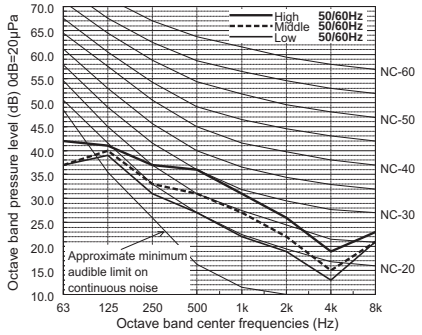

PEFY-P71,80VMA(L)-E

External Static Pressure: 50Pa
Power Source: 220-240V(50/60Hz)

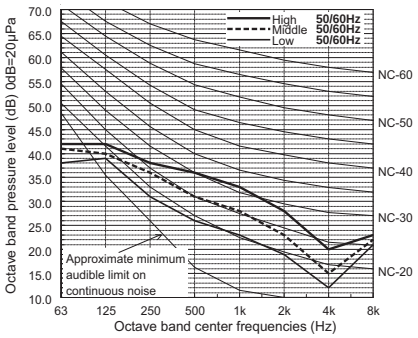

PEFY-P71,80VMA(L)-E

External Static Pressure: 70Pa
Power Source: 220-240V(50/60Hz)

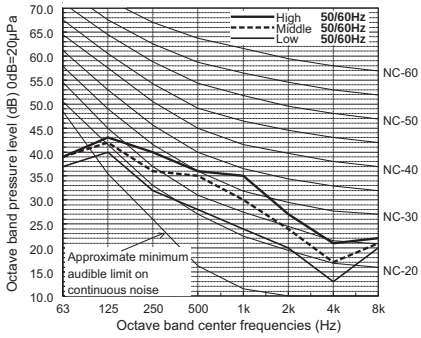

PEFY-P71,80VMA(L)-E

External Static Pressure: 100Pa
Power Source: 220-240V(50/60Hz)

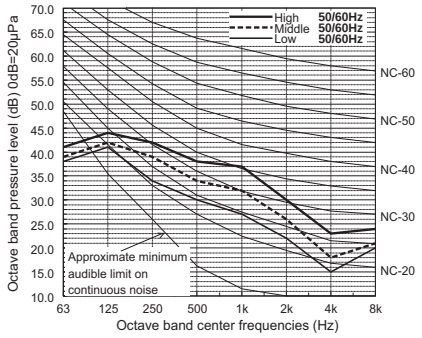

PEFY-P71,80VMA(L)-E

External Static Pressure: 150Pa
Power Source: 220-240V(50/60Hz)

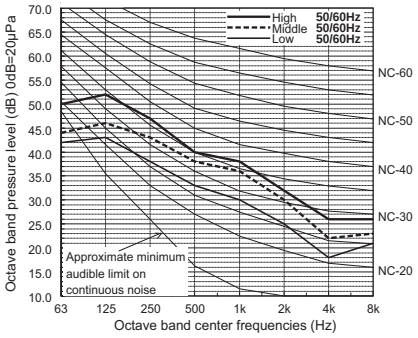

PEFY-P100VMA(L)-E

External Static Pressure: 35Pa
Power Source: 220-240V(50/60Hz)

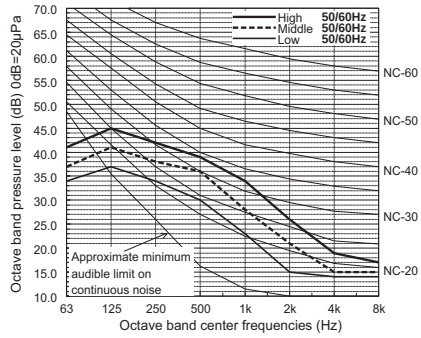

PEFY-P100VMA(L)-E

External Static Pressure: 50Pa
Power Source: 220-240V(50/60Hz)

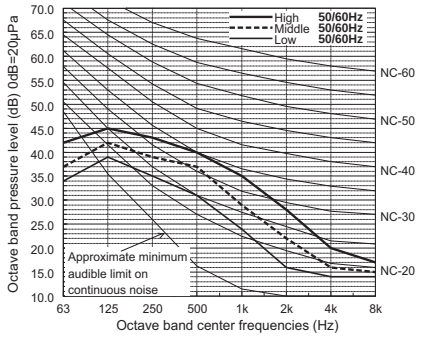

PEFY-P100VMA(L)-E

External Static Pressure: 70Pa
Power Source: 220-240V(50/60Hz)

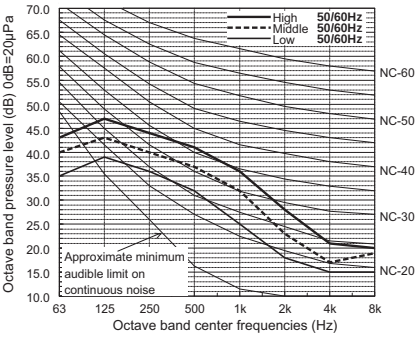

PEFY-P100VMA(L)-E

External Static Pressure: 100Pa
Power Source: 220-240V(50/60Hz)

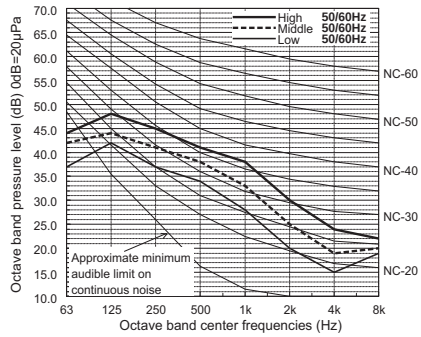

PEFY-P100VMA(L)-E

External Static Pressure: 150Pa
Power Source: 220-240V(50/60Hz)

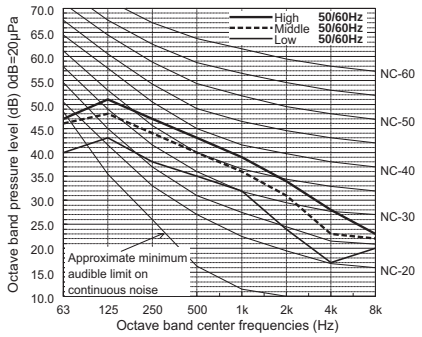

PEFY-P125VMA(L)-E

External Static Pressure: 35Pa
Power Source: 220-240V(50/60Hz)

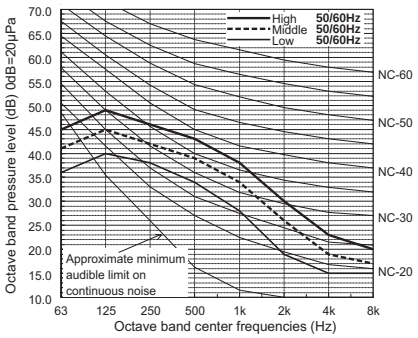

PEFY-P125VMA(L)-E

External Static Pressure: 50Pa
Power Source: 220-240V(50/60Hz)

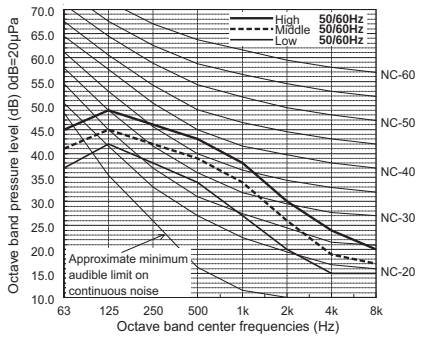

PEFY-P125VMA(L)-E

External Static Pressure: 70Pa
Power Source: 220-240V(50/60Hz)

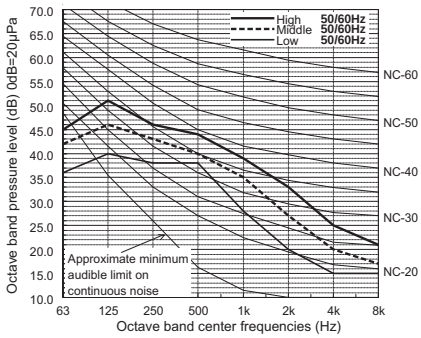

PEFY-P125VMA(L)-E

External Static Pressure: 100Pa
Power Source: 220-240V(50/60Hz)

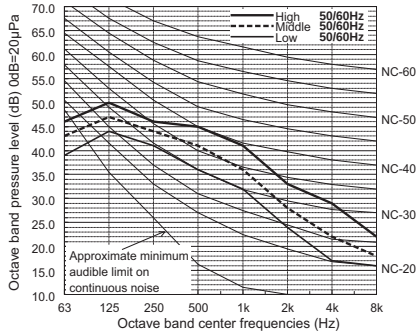

PEFY-P125VMA(L)-E

External Static Pressure: 150Pa
Power Source: 220-240V(50/60Hz)

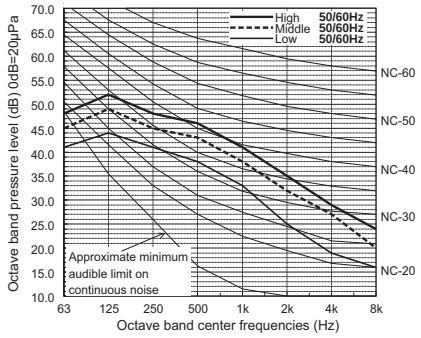

PEFY-P140VMA(L)-E

External Static Pressure: 35Pa
Power Source: 220-240V(50/60Hz)

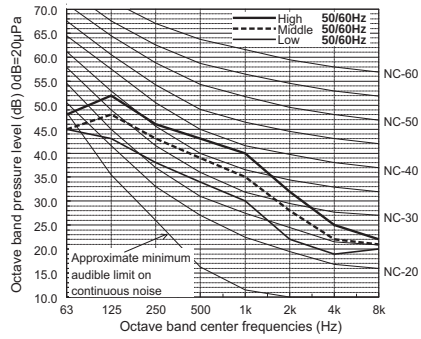

PEFY-P140VMA(L)-E

External Static Pressure: 50Pa
Power Source: 220-240V(50/60Hz)

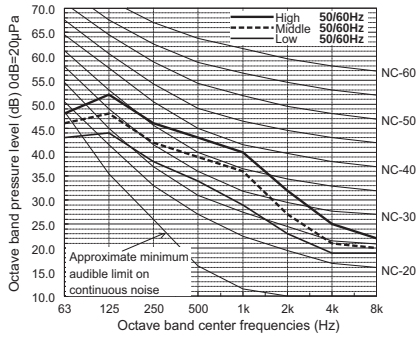

PEFY-P140VMA(L)-E

External Static Pressure: 70Pa
Power Source: 220-240V(50/60Hz)

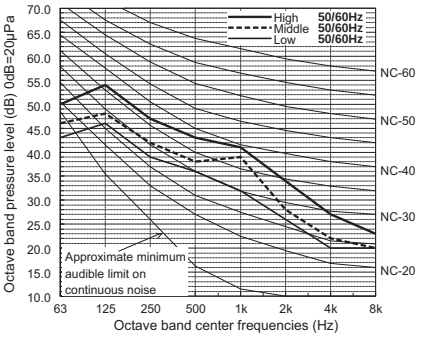

PEFY-P140VMA(L)-E

External Static Pressure: 100Pa
Power Source: 220-240V(50/60Hz)

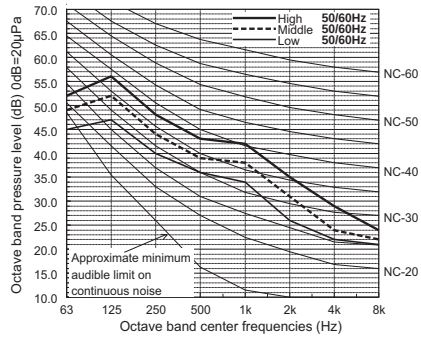

PEFY-P140VMA(L)-E

External Static Pressure: 150Pa
Power Source: 220-240V(50/60Hz)

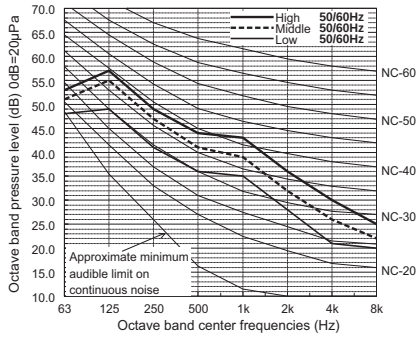

5-2-2. NC curves (Sound level measured point : With 2m air inlet duct and 2m air outlet duct)

PEFY-P20,25VMA(L)-E

External Static Pressure: 35Pa
Power Source: 220-230-240V(50/60Hz)

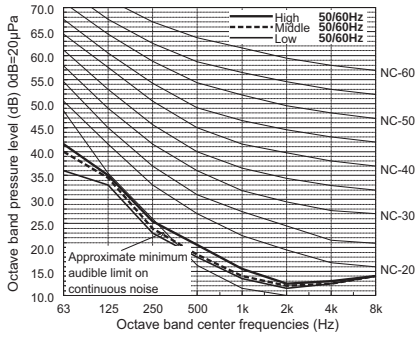

PEFY-P20,25VMA(L)-E

External Static Pressure: 50Pa
Power Source: 220-230-240V(50/60Hz)

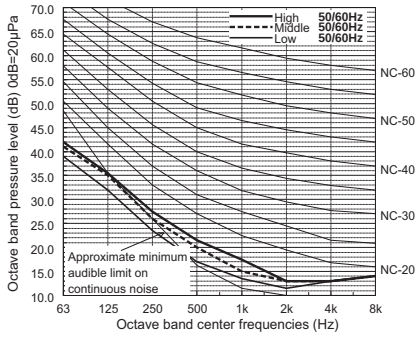

PEFY-P20,25VMA(L)-E

External Static Pressure: 70Pa
Power Source: 220-230-240V(50/60Hz)

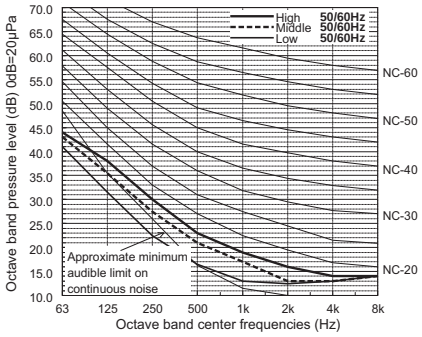

PEFY-P20,25VMA(L)-E

External Static Pressure: 100Pa
Power Source: 220-230-240V(50/60Hz)

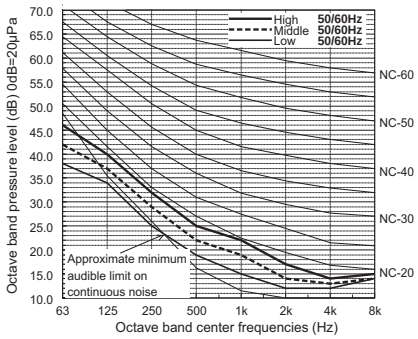

PEFY-P20,25VMA(L)-E

External Static Pressure: 150Pa
Power Source: 220-230-240V(50/60Hz)

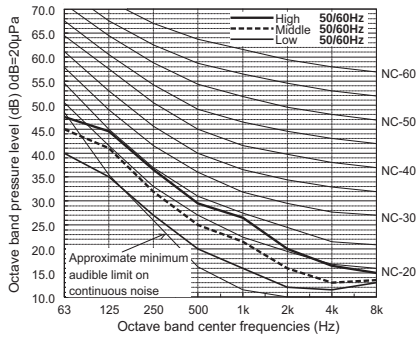

PEFY-P32VMA(L)-E

External Static Pressure: 35Pa
Power Source: 220-230-240V(50/60Hz)

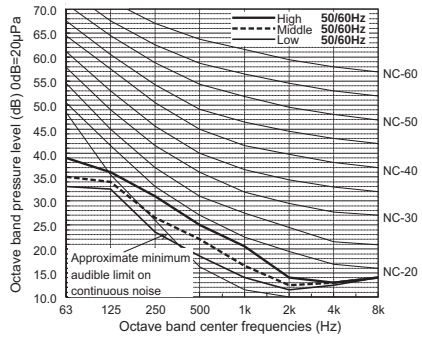

PEFY-P32VMA(L)-E

External Static Pressure: 50Pa
Power Source: 220-230-240V(50/60Hz)

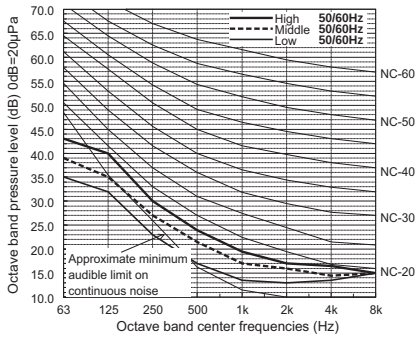

PEFY-P32VMA(L)-E

External Static Pressure: 70Pa
Power Source: 220-230-240V(50/60Hz)

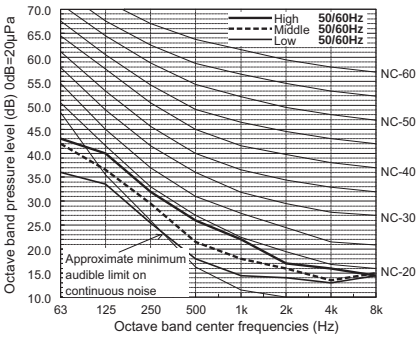

PEFY-P32VMA(L)-E

External Static Pressure: 100Pa
Power Source: 220-230-240V(50/60Hz)

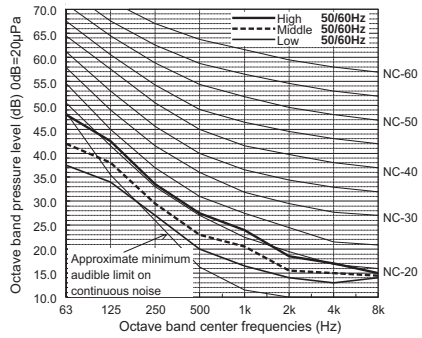

PEFY-P32VMA(L)-E

External Static Pressure: 150Pa
Power Source: 220-230-240V(50/60Hz)

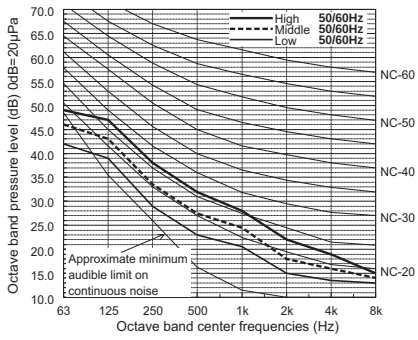

PEFY-P40VMA(L)-E

External Static Pressure: 35Pa
Power Source: 220-230-240V(50/60Hz)

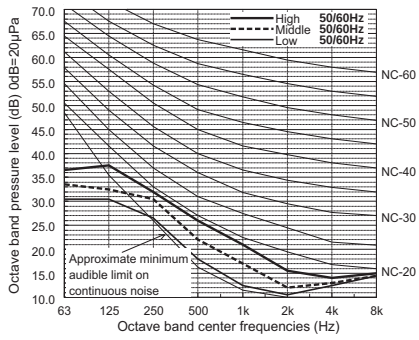

PEFY-P40VMA(L)-E

External Static Pressure: 50Pa
Power Source: 220-230-240V(50/60Hz)

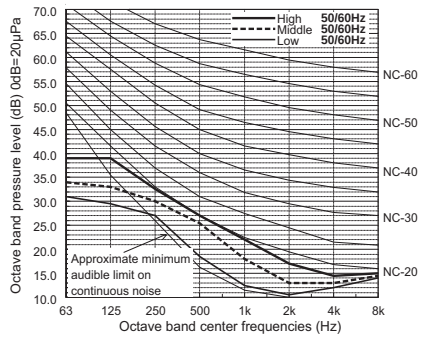

PEFY-P40VMA(L)-E

External Static Pressure: 70Pa
Power Source: 220-230-240V(50/60Hz)

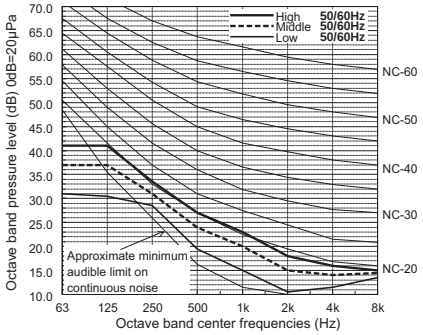

PEFY-P40VMA(L)-E

External Static Pressure: 100Pa
Power Source: 220-230-240V(50/60Hz)

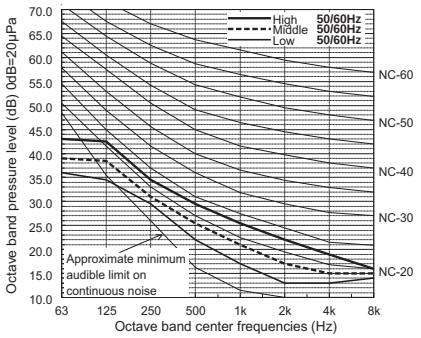

PEFY-P40VMA(L)-E

External Static Pressure: 150Pa
Power Source: 220-230-240V(50/60Hz)

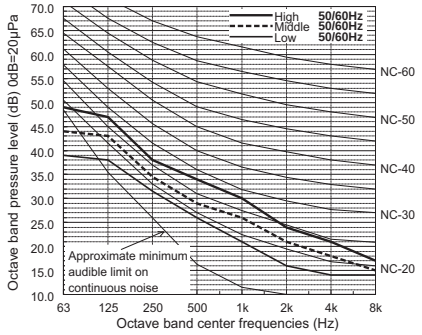

PEFY-P50VMA(L)-E

External Static Pressure: 35Pa
Power Source: 220-230-240V(50/60Hz)

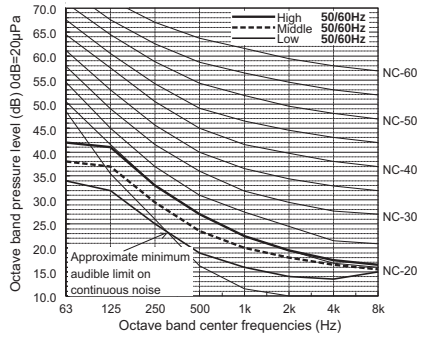

PEFY-P50VMA(L)-E

External Static Pressure: 50Pa
Power Source: 220-230-240V(50/60Hz)

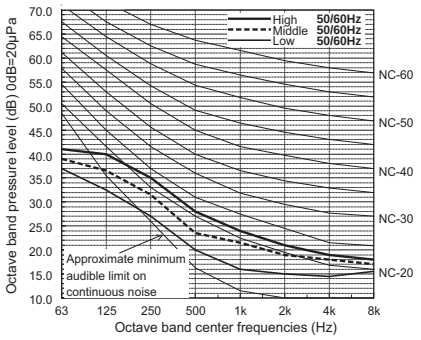

PEFY-P50VMA(L)-E

External Static Pressure: 70Pa
Power Source: 220-230-240V(50/60Hz)

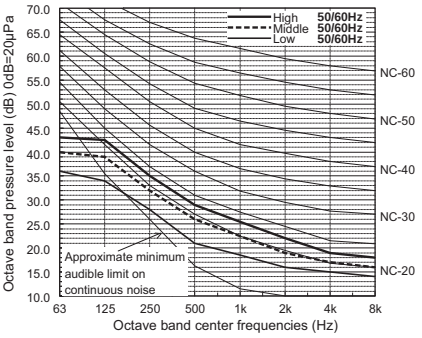

PEFY-P50VMA(L)-E

External Static Pressure: 100Pa
Power Source: 220-230-240V(50/60Hz)

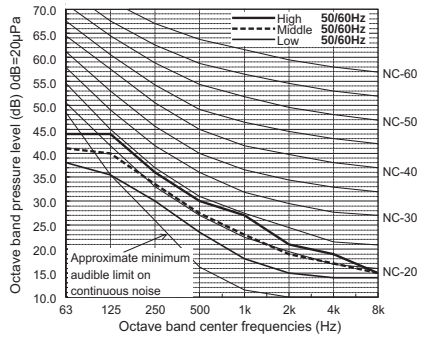

PEFY-P50VMA(L)-E

External Static Pressure: 150Pa
Power Source: 220-230-240V(50/60Hz)

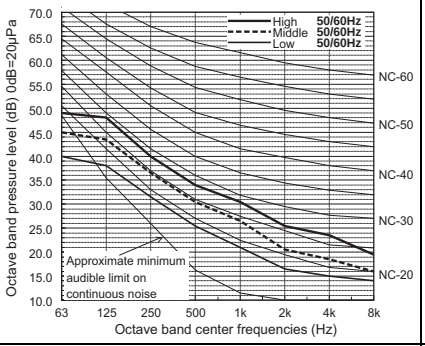

PEFY-P63VMA(L)-E

External Static Pressure: 35Pa
Power Source: 220-230-240V(50/60Hz)

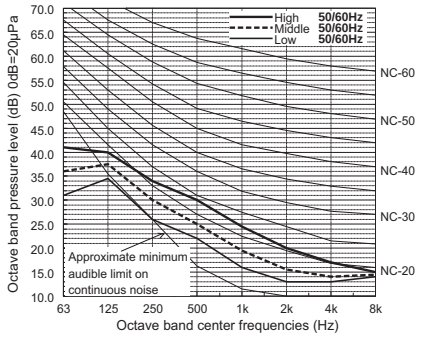

PEFY-P63VMA(L)-E

External Static Pressure: 50Pa
Power Source: 220-230-240V(50/60Hz)

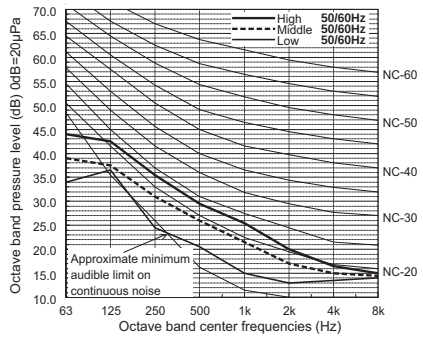

PEFY-P63VMA(L)-E

External Static Pressure: 70Pa
Power Source: 220-230-240V(50/60Hz)

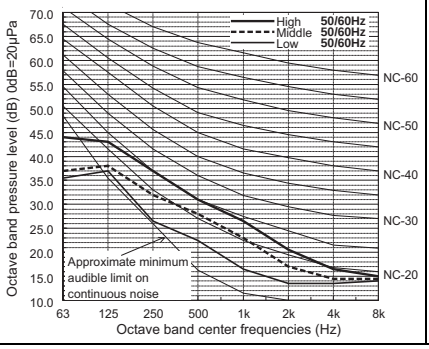

PEFY-P63VMA(L)-E

External Static Pressure: 100Pa
Power Source: 220-230-240V(50/60Hz)

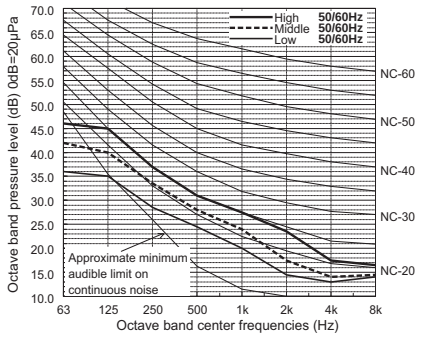

5. SOUND LEVELS

PEFY-P63VMA(L)-E

External Static Pressure: 150Pa
Power Source: 220-230-240V(50/60Hz)

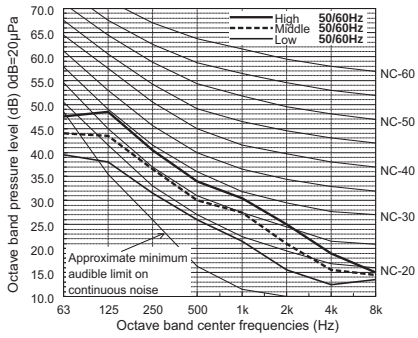

PEFY-P71, 80VMA(L)-E

External Static Pressure: 35Pa
Power Source: 220-230-240V(50/60Hz)

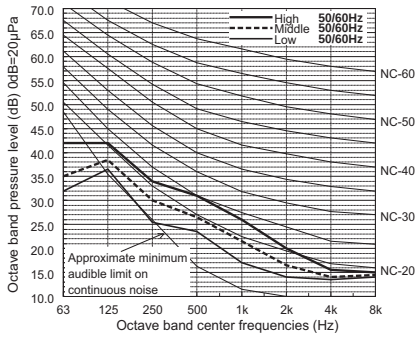

PEFY-P71, 80VMA(L)-E

External Static Pressure: 50Pa
Power Source: 220-230-240V(50/60Hz)

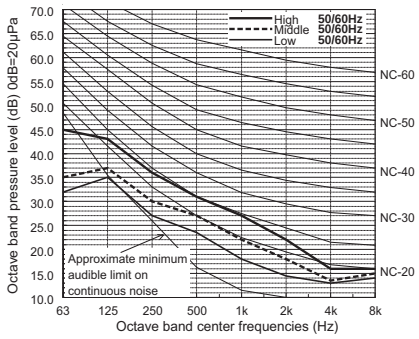

PEFY-P71, 80VMA(L)-E

External Static Pressure: 70Pa
Power Source: 220-230-240V(50/60Hz)

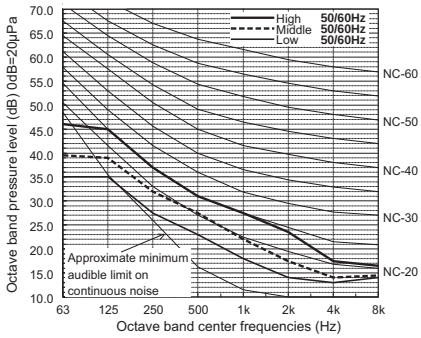

PEFY-P71, 80VMA(L)-E

External Static Pressure: 100Pa
Power Source: 220-230-240V(50/60Hz)

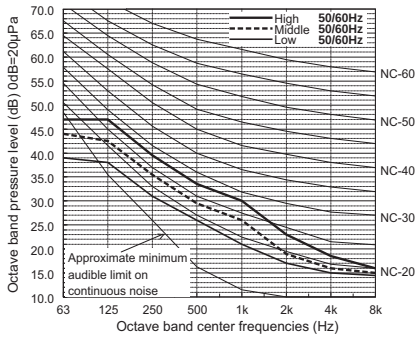

PEFY-P71, 80VMA(L)-E

External Static Pressure: 150Pa
Power Source: 220-230-240V(50/60Hz)

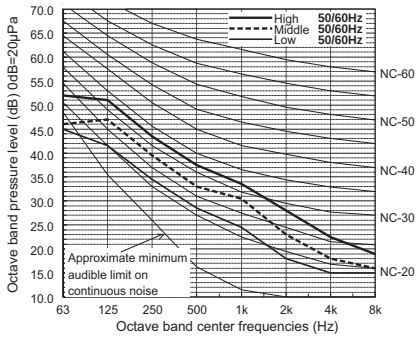

PEFY-P100VMA(L)-E

External Static Pressure: 35Pa
Power Source: 220-230-240V(50/60Hz)

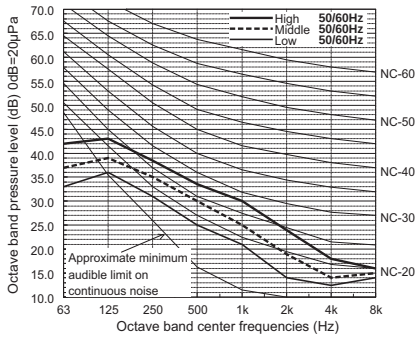

PEFY-P100VMA(L)-E

External Static Pressure: 50Pa
Power Source: 220-230-240V(50/60Hz)

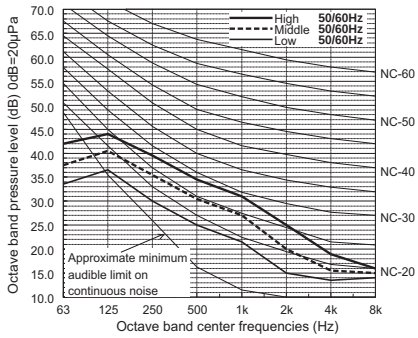

PEFY-P100VMA(L)-E

External Static Pressure: 70Pa
Power Source: 220-230-240V(50/60Hz)

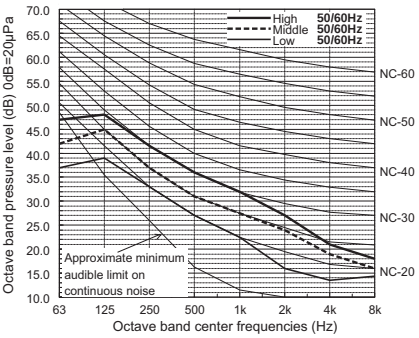

PEFY-P100VMA(L)-E

External Static Pressure: 100Pa
Power Source: 220-230-240V(50/60Hz)

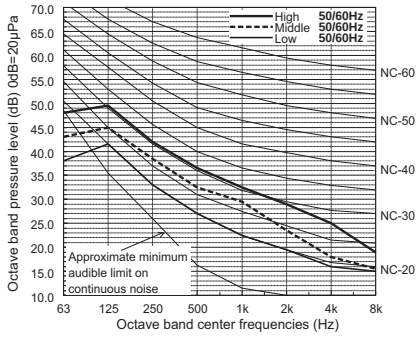

PEFY-P100VMA(L)-E

External Static Pressure: 150Pa
Power Source: 220-230-240V(50/60Hz)

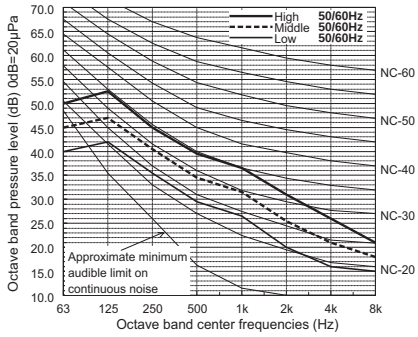

PEFY-P125VMA(L)-E

External Static Pressure: 35Pa
Power Source: 220-230-240V(50/60Hz)

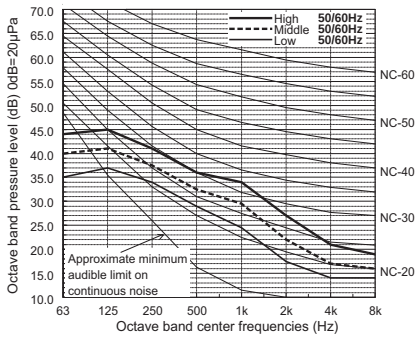

PEFY-P125VMA(L)-E

External Static Pressure: 50Pa
Power Source: 220-230-240V(50/60Hz)

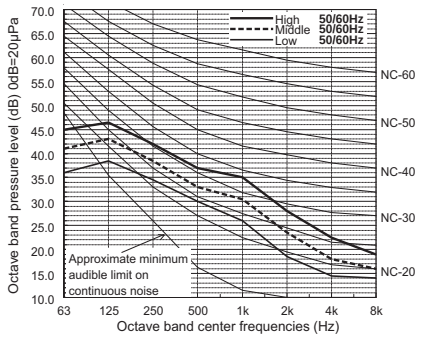

PEFY-P125VMA(L)-E

External Static Pressure: 70Pa
Power Source: 220-230-240V(50/60Hz)

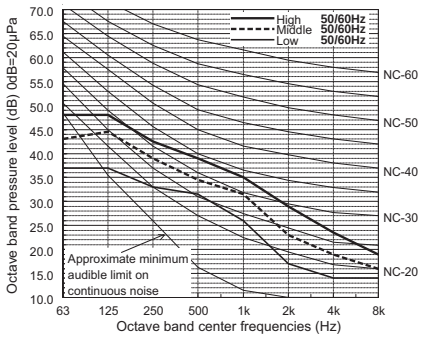

PEFY-P125VMA(L)-E

External Static Pressure: 100Pa
Power Source: 220-230-240V(50/60Hz)

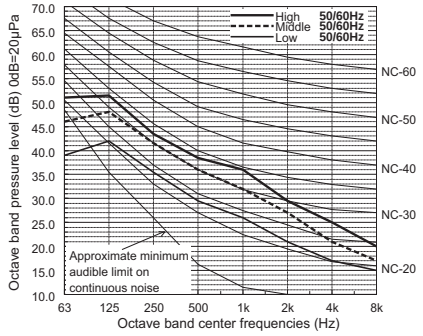

PEFY-P125VMA(L)-E

External Static Pressure: 150Pa
Power Source: 220-230-240V(50/60Hz)

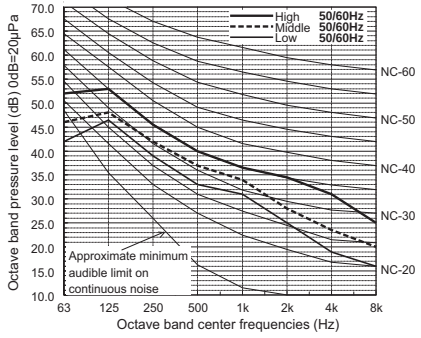

PEFY-P140VMA(L)-E

External Static Pressure: 35Pa
Power Source: 220-230-240V(50/60Hz)

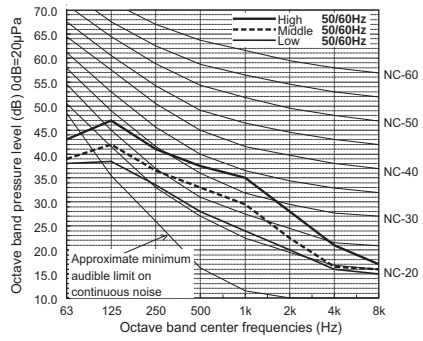

PEFY-P140VMA(L)-E

External Static Pressure: 50Pa
Power Source: 220-230-240V(50/60Hz)

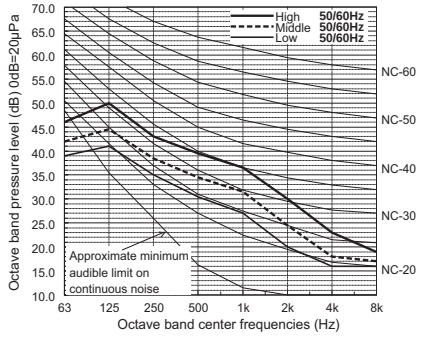

PEFY-P140VMA(L)-E

External Static Pressure: 70Pa
Power Source: 220-230-240V(50/60Hz)

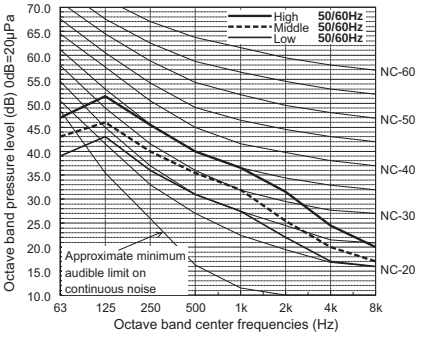

PEFY-P140VMA(L)-E

External Static Pressure: 100Pa
Power Source: 220-230-240V(50/60Hz)

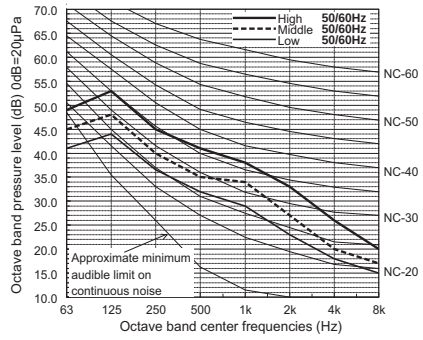

PEFY-P140VMA(L)-E

External Static Pressure: 150Pa
Power Source: 220-230-240V(50/60Hz)

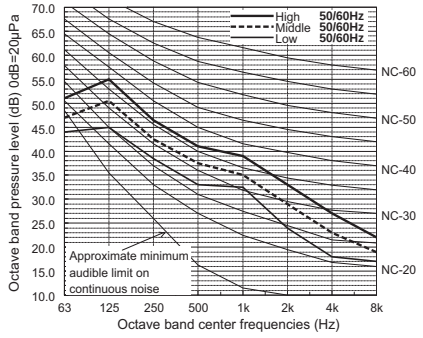

6. FAN CHARACTERISTICS CURVES

PEFY-P20,25VMA(L)-E
External static pressure : 35Pa
Power source : 220-240V

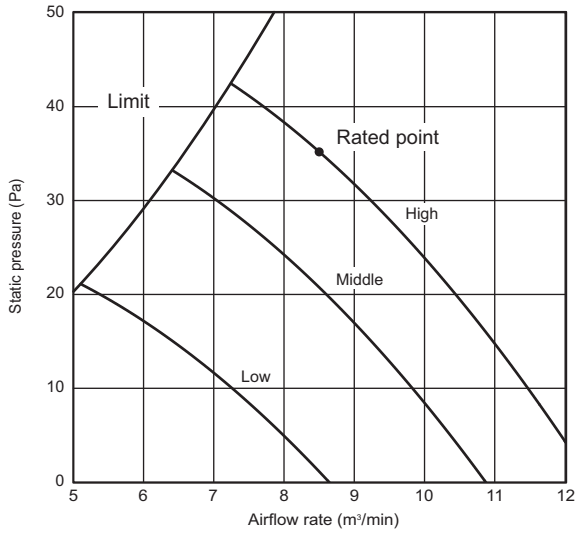

PEFY-P20,25VMA(L)-E
External static pressure : 50Pa
Power source : 220-240V

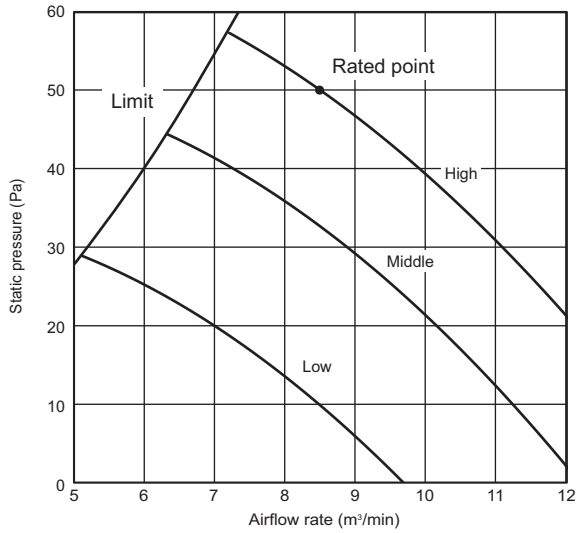

PEFY-P20,25VMA(L)-E
External static pressure : 70Pa
Power source : 220-240V

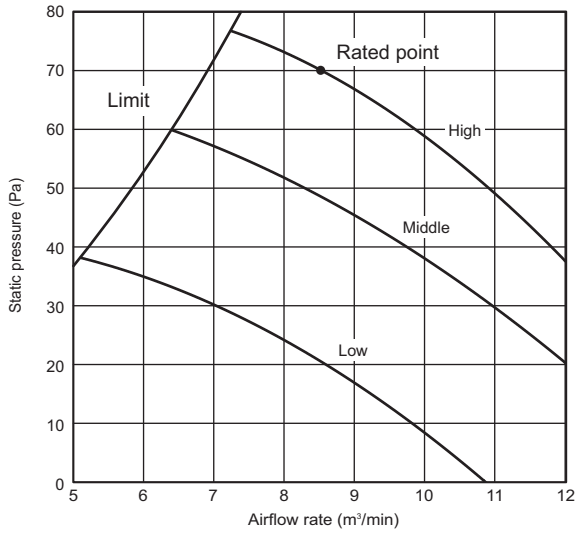

PEFY-P20,25VMA(L)-E
External static pressure : 100Pa
Power source : 220-240V

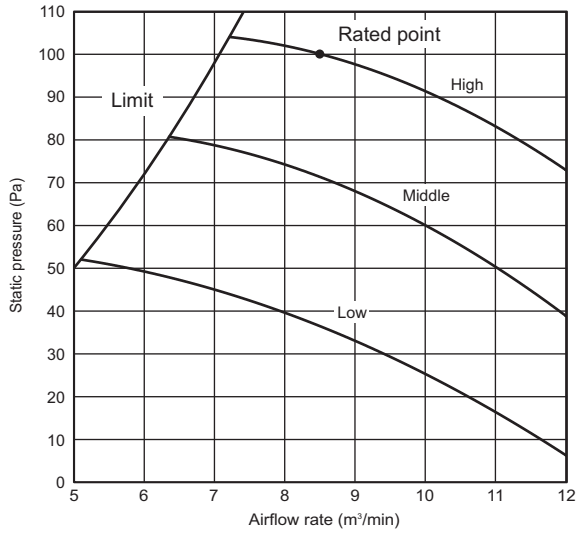

PEFY-P20,25VMA(L)-E
External static pressure : 150Pa
Power source : 220-240V

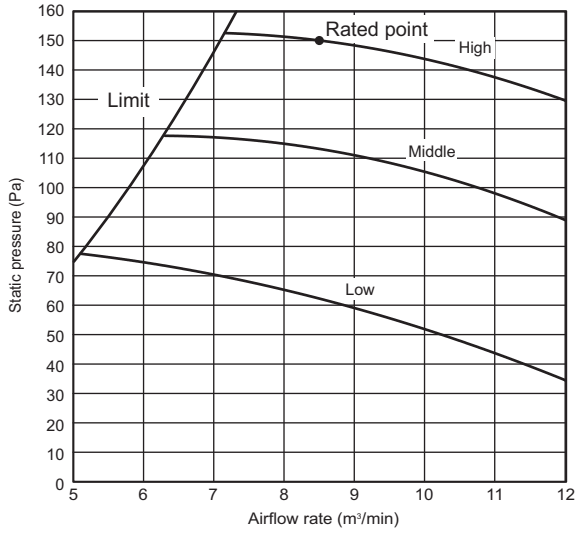

PEFY-P32VMA(L)-E
External static pressure : 35Pa
Power source : 220-240V

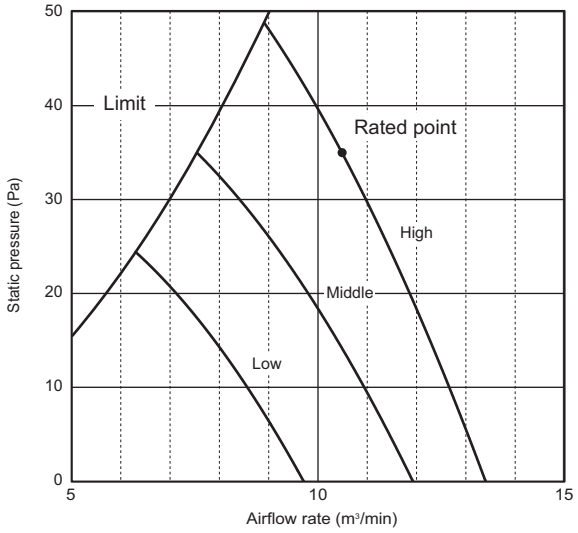

PEFY-P32VMA(L)-E
External static pressure : 50Pa
Power source : 220-240V

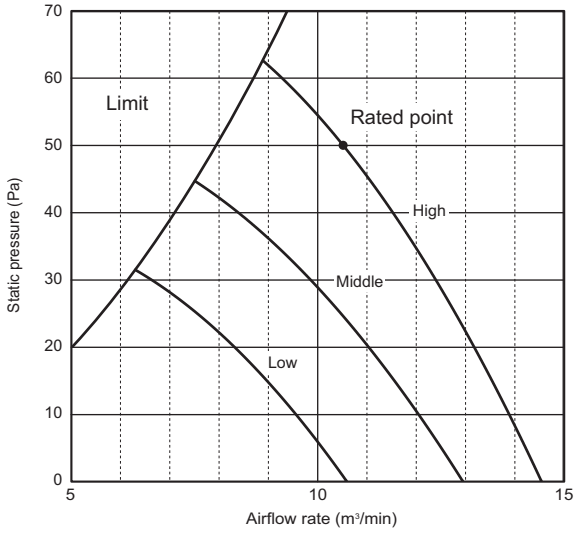

PEFY-P32VMA(L)-E
External static pressure : 70Pa
Power source : 220-240V

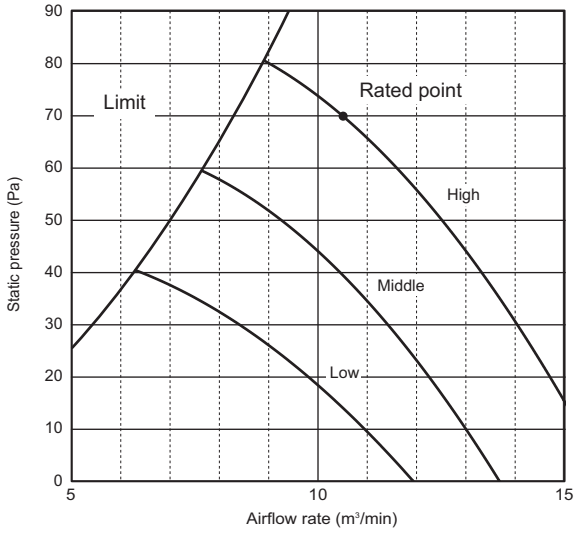

PEFY-P32VMA(L)-E
External static pressure : 100Pa
Power source : 220-240V

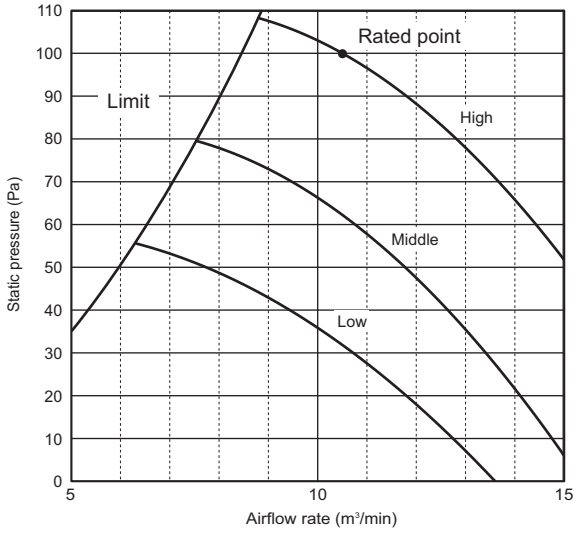

PEFY-P32VMA(L)-E
External static pressure : 150Pa
Power source : 220-240V

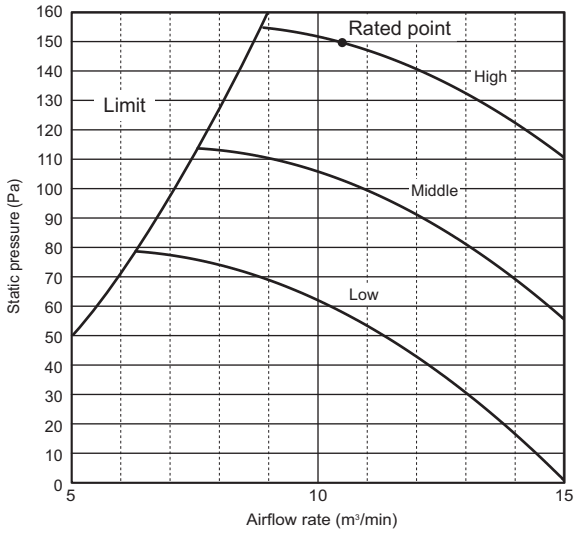

6. FAN CHARACTERISTICS CURVES

PEFY-P40VMA(L)-E
External static pressure : 35Pa
Power source : 220-240V

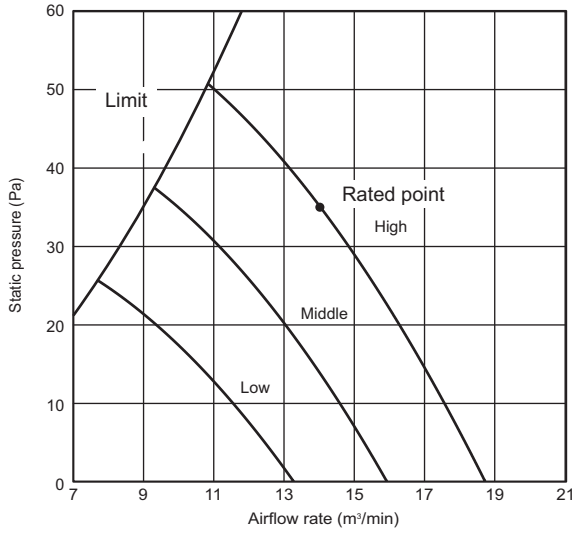

PEFY-P40VMA(L)-E
External static pressure : 50Pa
Power source : 220-240V

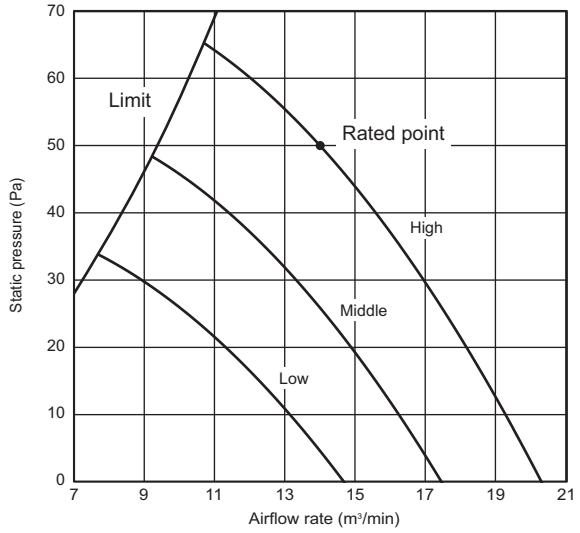

PEFY-P40VMA(L)-E
External static pressure : 70Pa
Power source : 220-240V

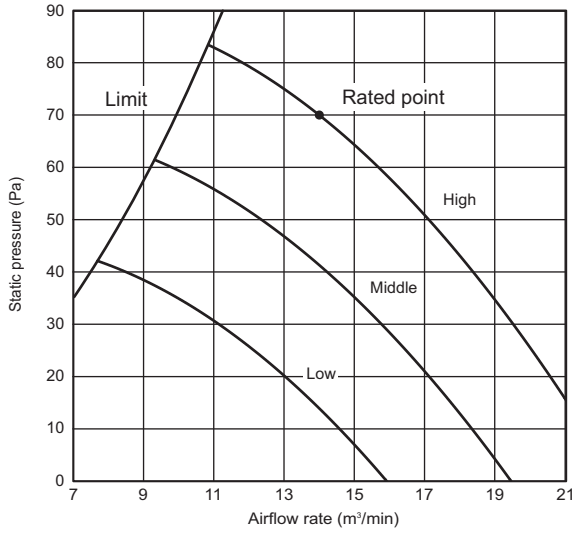

PEFY-P40VMA(L)-E
External static pressure : 100Pa
Power source : 220-240V

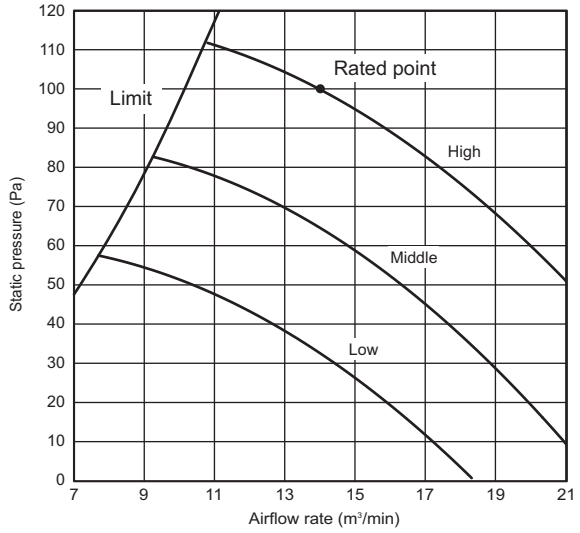

PEFY-P40VMA(L)-E
External static pressure : 150Pa
Power source : 220-240V

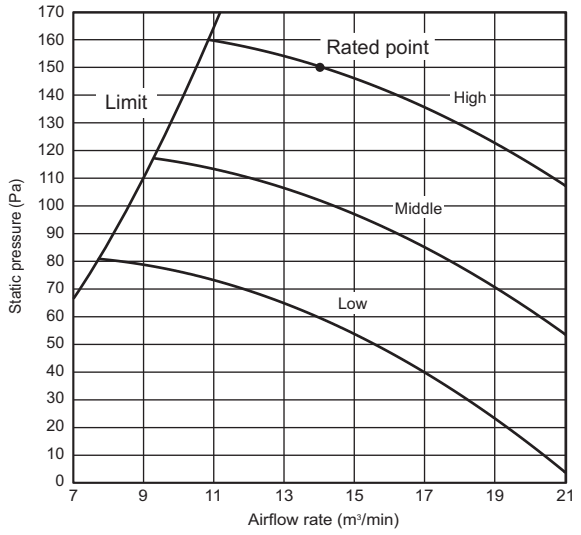

6. FAN CHARACTERISTICS CURVES

PEFY-P50VMA(L)-E
External static pressure : 35Pa
Power source : 220-240V

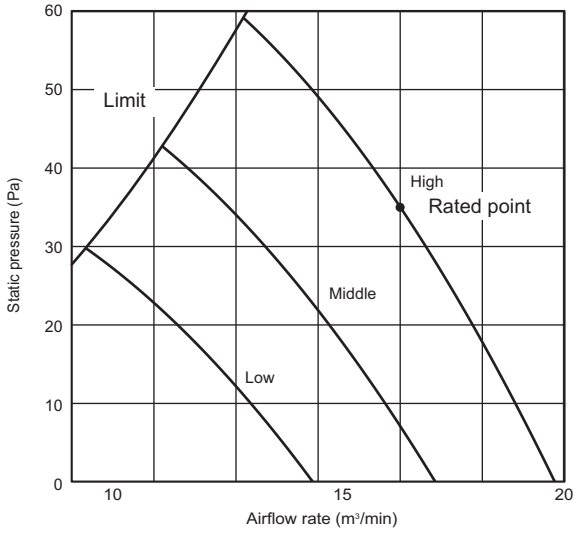

PEFY-P50VMA(L)-E
External static pressure : 50Pa
Power source : 220-240V

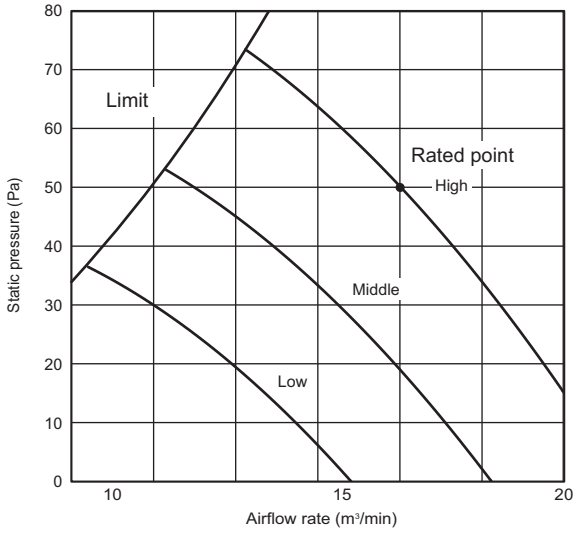

PEFY-P50VMA(L)-E
External static pressure : 70Pa
Power source : 220-240V

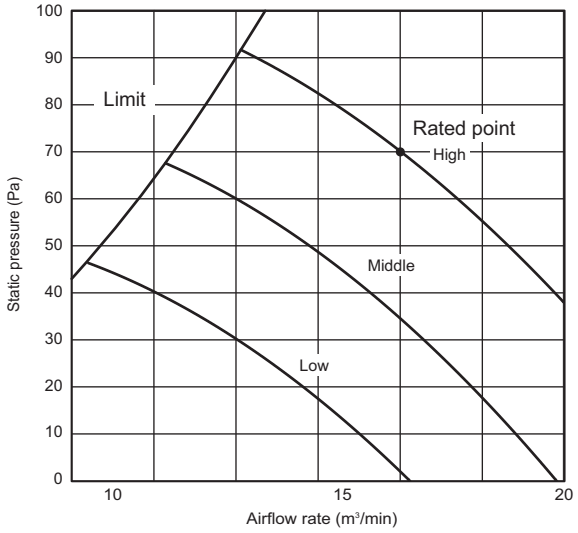

PEFY-P50VMA(L)-E
External static pressure : 100Pa
Power source : 220-240V

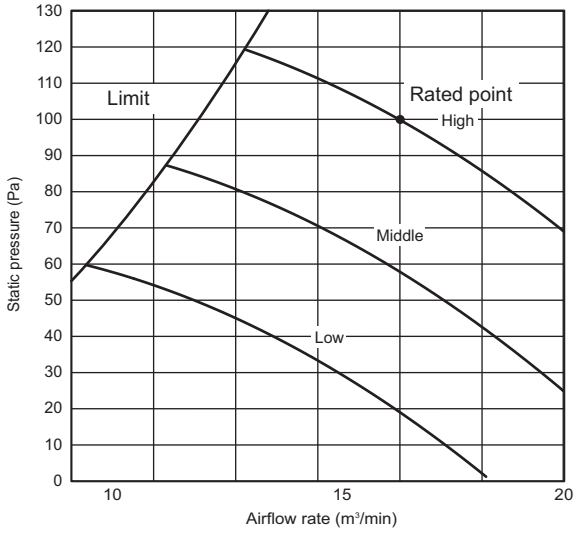

PEFY-P50VMA(L)-E
External static pressure : 150Pa
Power source : 220-240V

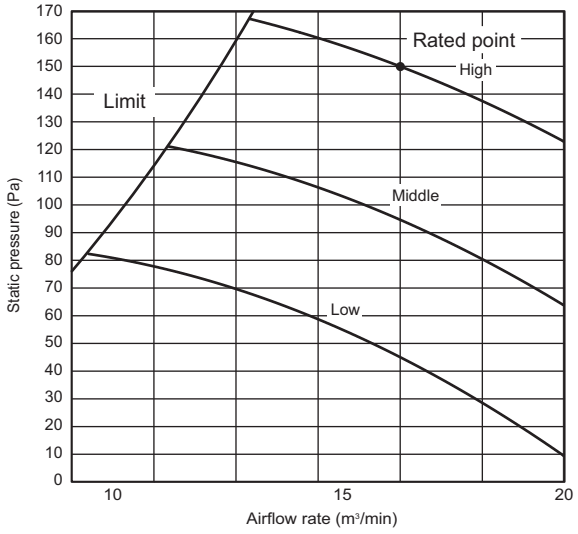

6. FAN CHARACTERISTICS CURVES

PEFY-P63VMA(L)-E
External static pressure : 35Pa
Power source : 220-240V

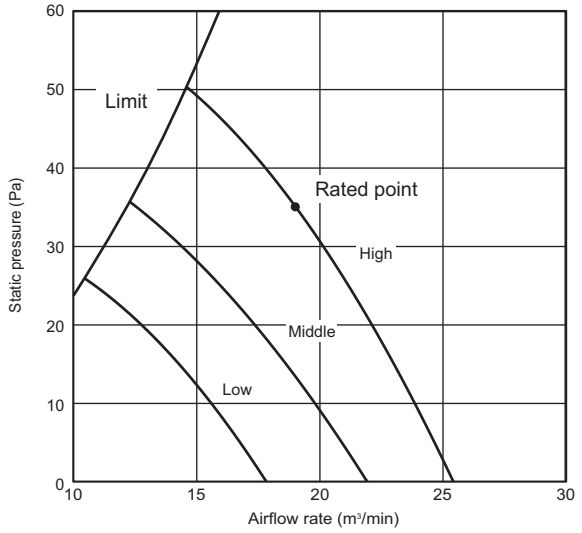

PEFY-P63VMA(L)-E
External static pressure : 50Pa
Power source : 220-240V

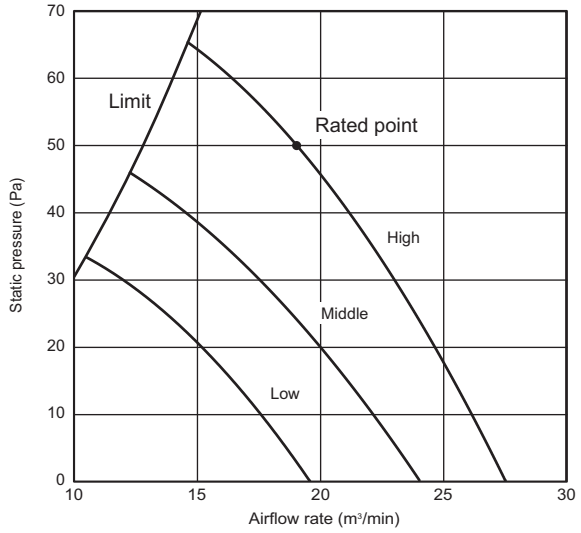

PEFY-P63VMA(L)-E
External static pressure : 70Pa
Power source : 220-240V

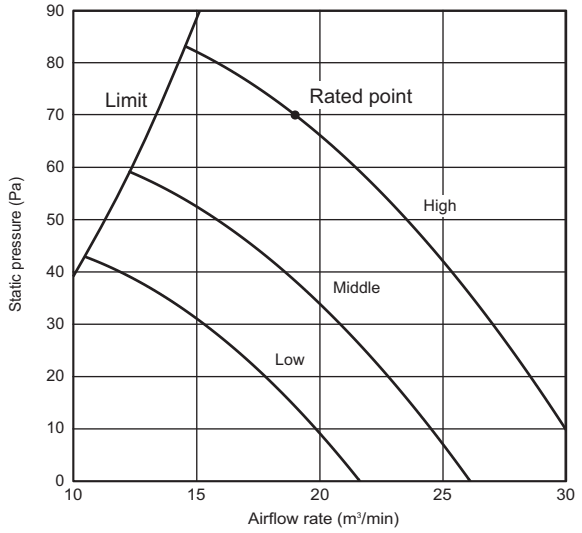

PEFY-P63VMA(L)-E
External static pressure : 100Pa
Power source : 220-240V

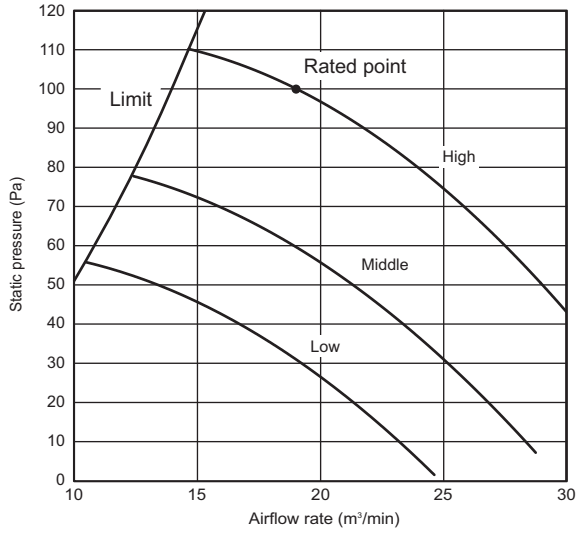

PEFY-P63VMA(L)-E
External static pressure : 150Pa
Power source : 220-240V

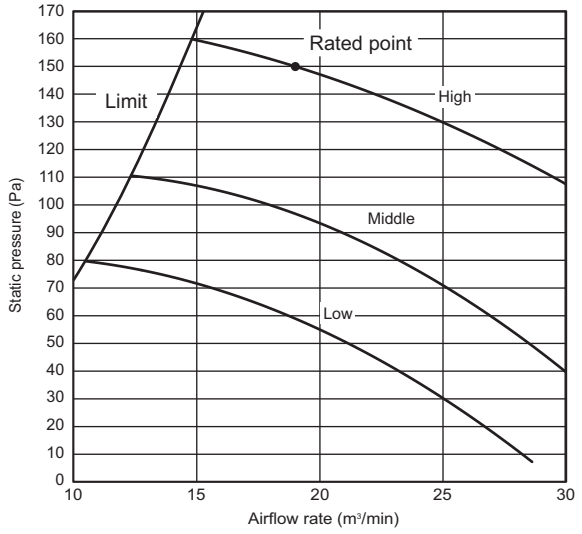

6. FAN CHARACTERISTICS CURVES

PEFY-P71,80VMA(L)-E
External static pressure : 35Pa
Power source : 220-240V

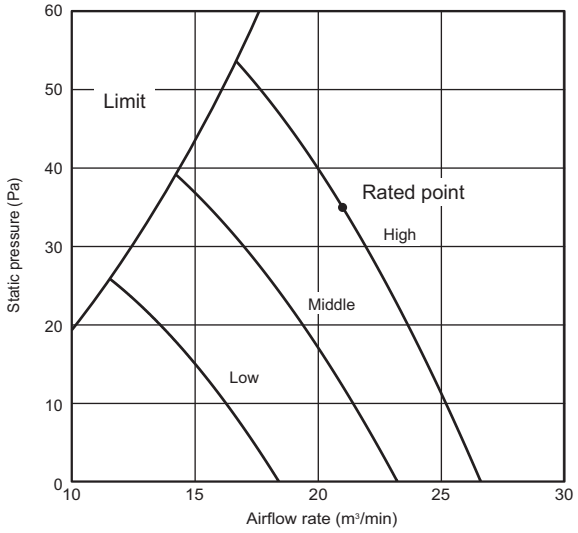

PEFY-P71,80VMA(L)-E
External static pressure : 50Pa
Power source : 220-240V

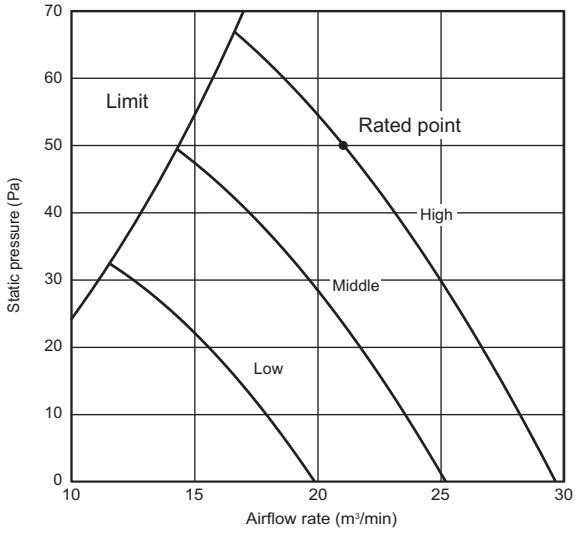

PEFY-P71,80VMA(L)-E
External static pressure : 70Pa
Power source : 220-240V

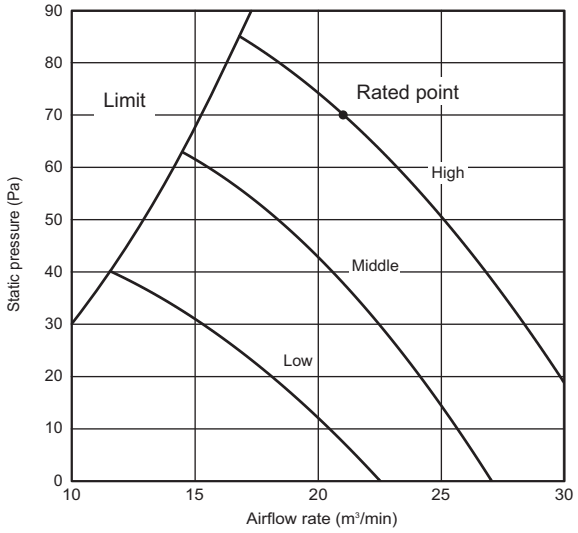

PEFY-P71,80VMA(L)-E
External static pressure : 100Pa
Power source : 220-240V

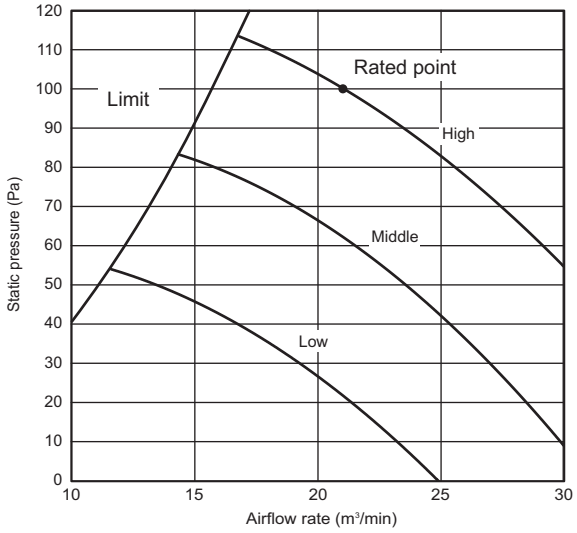

PEFY-P71,80VMA(L)-E
External static pressure : 150Pa
Power source : 220-240V

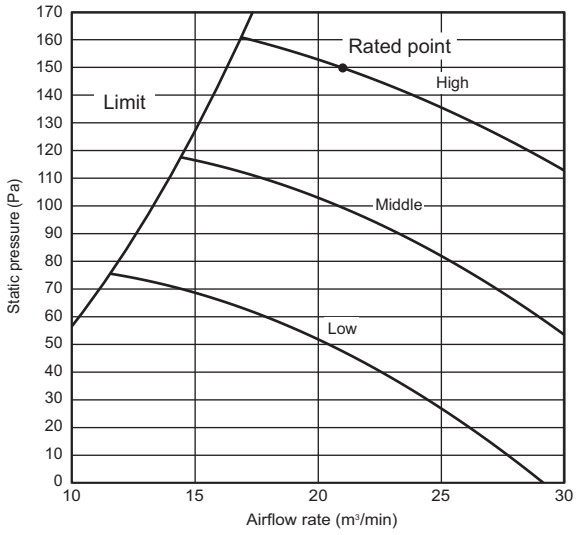

6. FAN CHARACTERISTICS CURVES

PEFY-P100VMA(L)-E
External static pressure : 35Pa
Power source : 220-240V

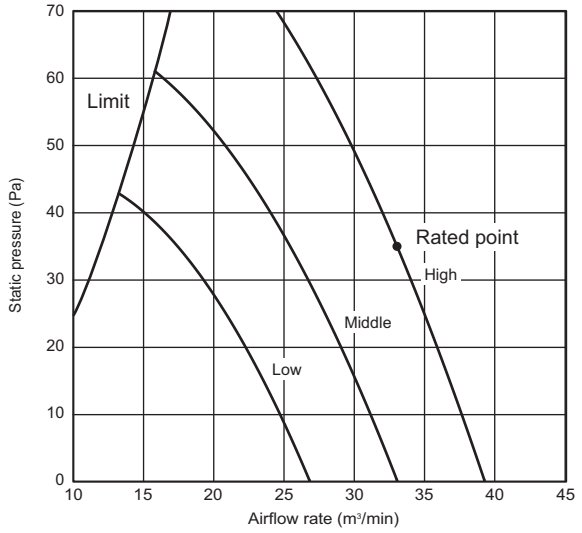

PEFY-P100VMA(L)-E
External static pressure : 50Pa
Power source : 220-240V

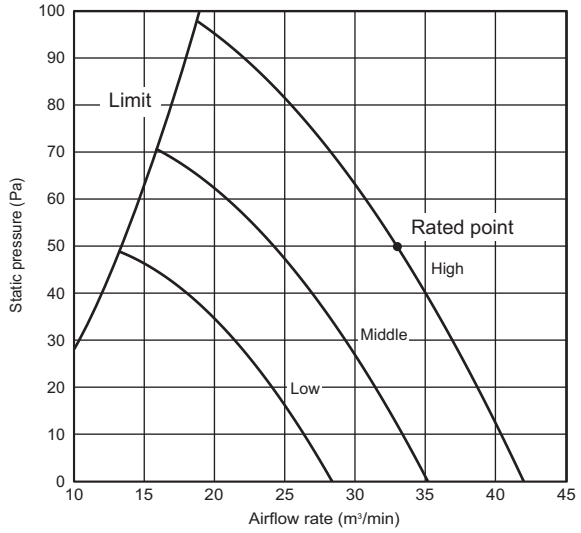

PEFY-P100VMA(L)-E
External static pressure : 70Pa
Power source : 220-240V

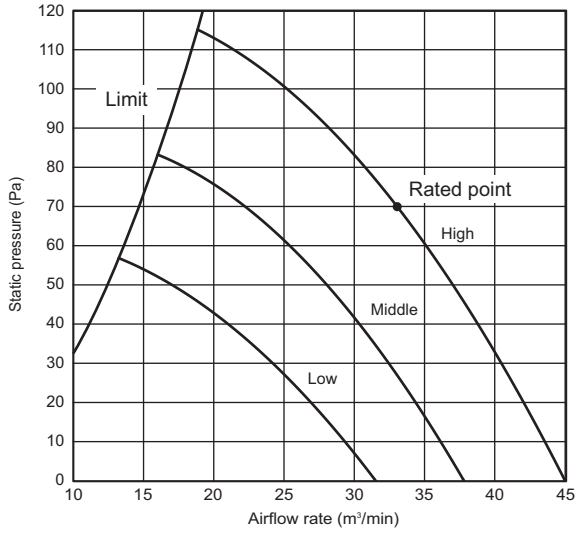

PEFY-P100VMA(L)-E
External static pressure : 100Pa
Power source : 220-240V

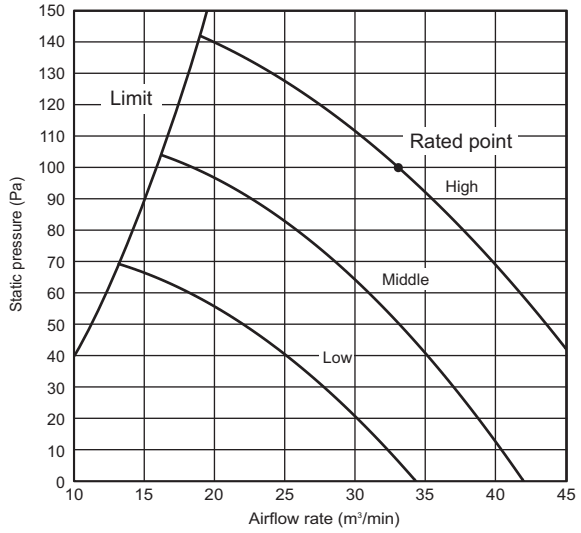

PEFY-P100VMA(L)-E
External static pressure : 150Pa
Power source : 220-240V

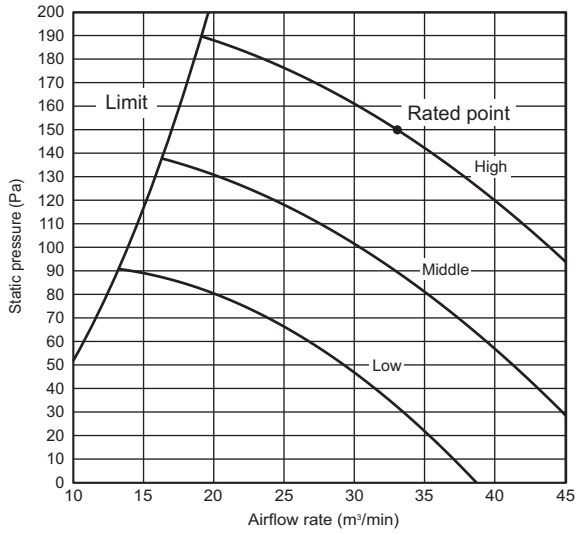

6. FAN CHARACTERISTICS CURVES

PEFY-P125VMA(L)-E
External static pressure : 35Pa
Power source : 220-240V

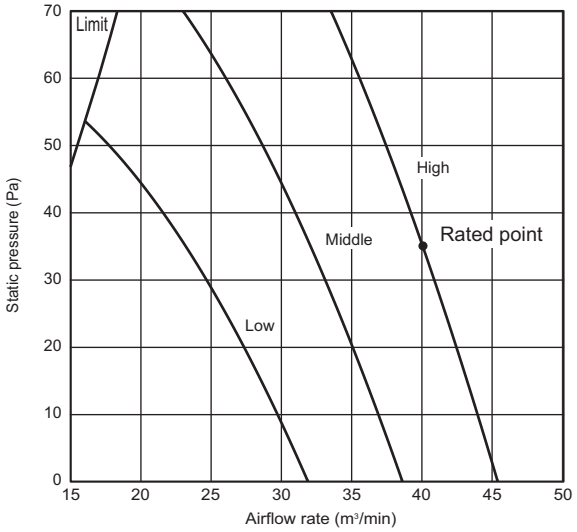

PEFY-P125VMA(L)-E
External static pressure : 50Pa
Power source : 220-240V

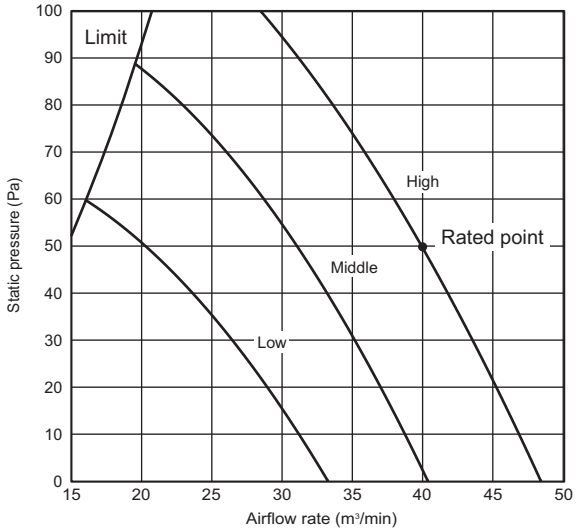

PEFY-P125VMA(L)-E
External static pressure : 70Pa
Power source : 220-240V

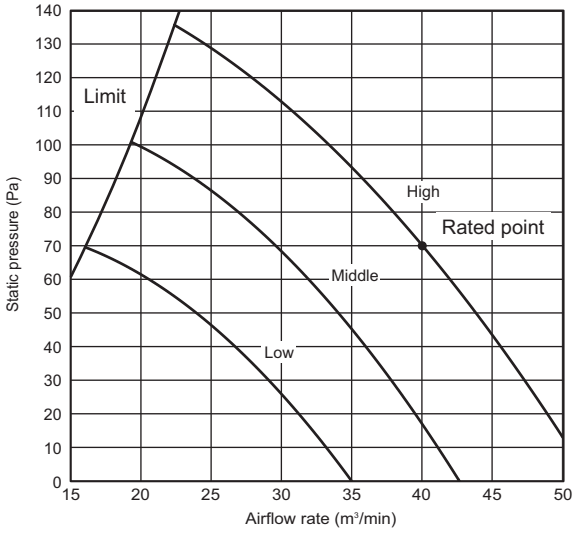

PEFY-P125VMA(L)-E
External static pressure : 100Pa
Power source : 220-240V

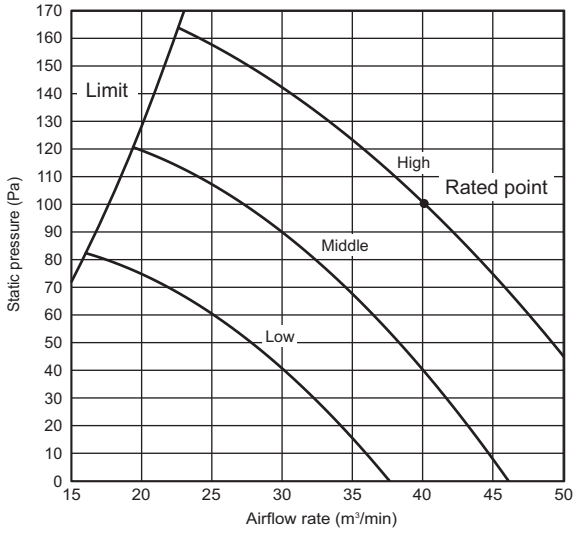

PEFY-P125VMA(L)-E
External static pressure : 150Pa
Power source : 220-240V

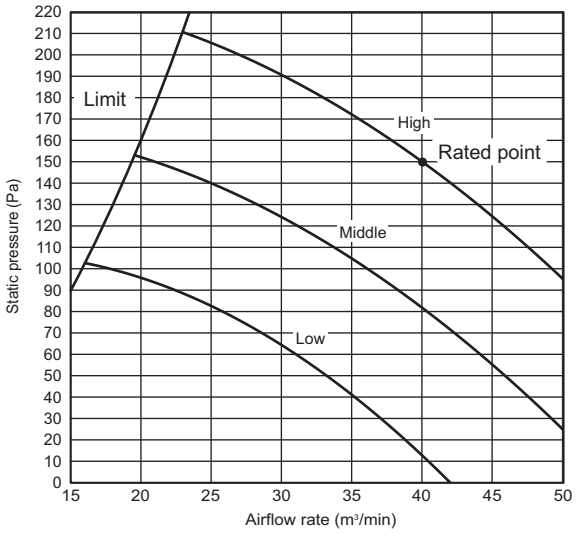

6. FAN CHARACTERISTICS CURVES

PEFY-P140VMA(L)-E
External static pressure : 35Pa
Power source : 220-240V

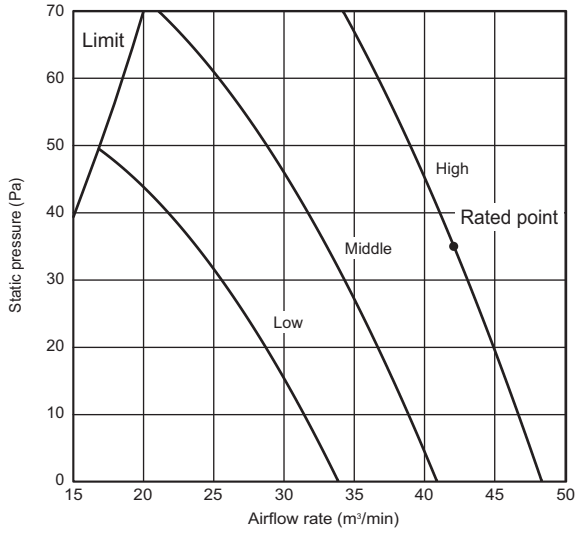

PEFY-P140VMA(L)-E
External static pressure : 50Pa
Power source : 220-240V

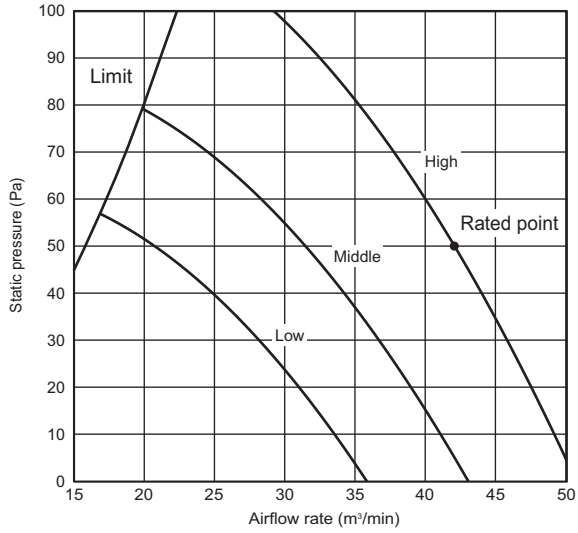

PEFY-P140VMA(L)-E
External static pressure : 70Pa
Power source : 220-240V

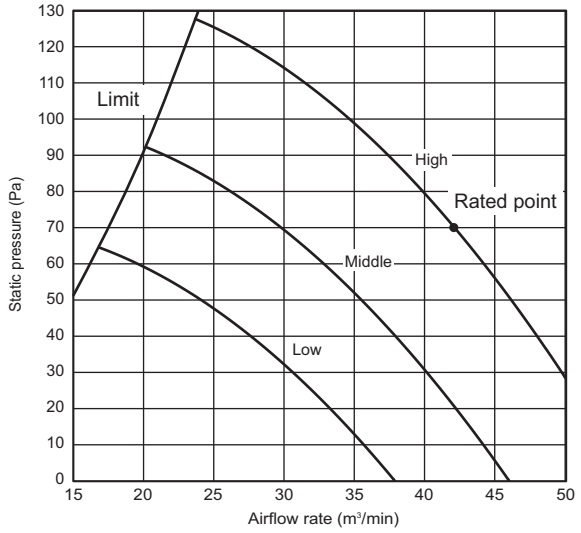

PEFY-P140VMA(L)-E
External static pressure : 100Pa
Power source : 220-240V

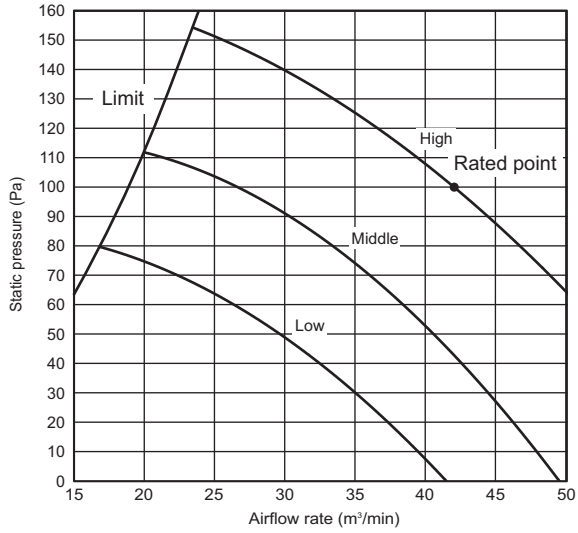

PEFY-P140VMA(L)-E
External static pressure : 150Pa
Power source : 220-240V

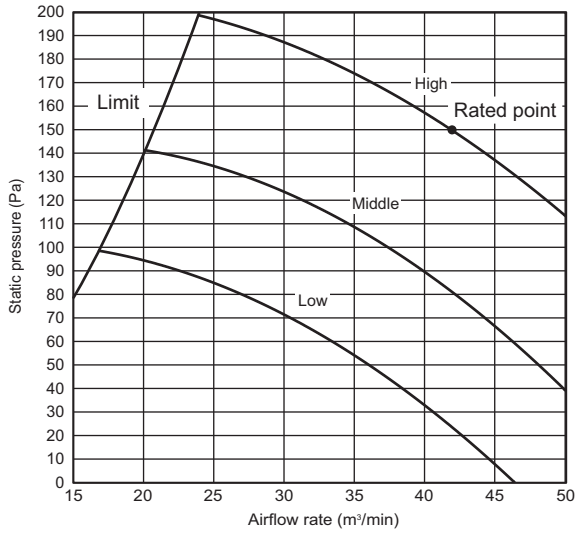

■ Optional parts line up for the Indoor unit

	Filter box
PEFY-P20, 25, 32VMA(L)-E	PAC-KE91TB-E
PEFY-P40, 50VMA(L)-E	PAC-KE92TB-E
PEFY-P63, 71, 80VMA(L)-E	PAC-KE93TB-E
PEFY-P100, 125VMA(L)-E	PAC-KE94TB-E
PEFY-P140VMA(L)-E	PAC-KE95TB-E

● PEFY-P-VMA(L)-E

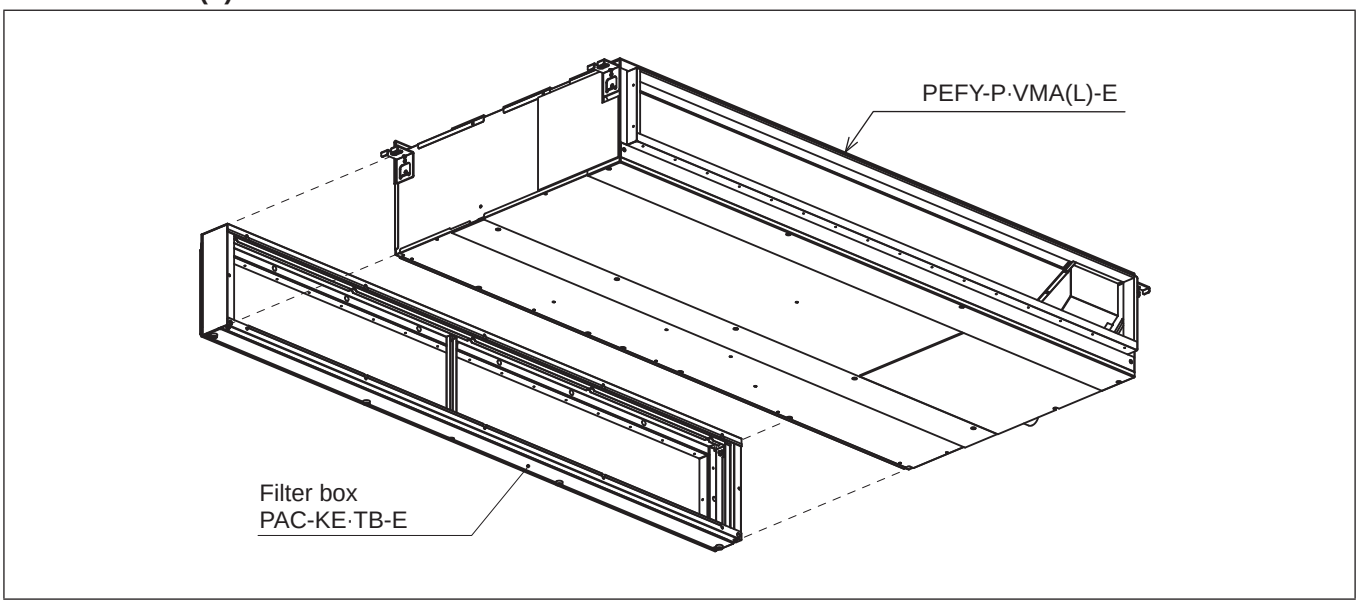

■ Filter box PAC-KE-TB-E for PEFY-P-VMA(L)-E

PAC-KE-TB-E

Item	1 Screw	2 Filter box	3 FLANGE	4 Installation manual	
Quantity	30	1	1	1	
Shape		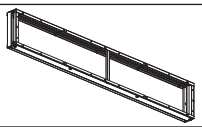	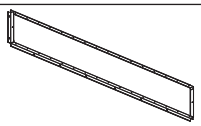	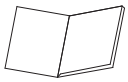	

Detailed installation information should be referred to its Installation Manual (WT05704X01)

PEFY-P-VMH-E-F

1. SPECIFICATIONS 1 - 78

2. EXTERNAL DIMENSIONS 1 - 79

3. CENTER OF GRAVITY 1 - 81

4. ELECTRICAL WIRING DIAGRAMS 1 - 82

5. SOUND LEVELS
   5-1. Sound levels 1 - 84
   5-2. NC curves 1 - 84
   5-3. Fan characteristics curves 1 - 88

6. CAPACITY TABLES
   6-1. Cooling capacity 1 - 91
   6-2. Outlet air temp cooled 1 - 92
   6-3. Heating capacity 1 - 93
   6-4. Outlet air temp heated 1 - 94

7. Optional parts for PEFY-P-VMH-E-F 1 - 95

1. SPECIFICATIONS

Model				PEFY-P80VMH-E-F	PEFY-P140VMH-E-F	PEFY-P200VMH-E-F	PEFY-P250VMH-E-F
Power source				1-phase 220-240V 50Hz, 1-phase 208-230V 60Hz		3-phase, 4-wire, 380-415V 50/60Hz	
Cooling capacity (Nominal)		✻1	kW	9.0	16.0	22.4	28.0
		✻1	kcal / h	7,700	13,800	19,300	24,100
		✻1	Btu / h	30,700	54,600	76,400	95,500
		✻2	kcal / h	-	-	-	-
	✻4 Power input		kW	0.16/0.21	0.29/0.33	0.34/0.42	0.39/0.50
	✻4 Current input		A	0.67/0.91	1.24/1.48	0.58/0.74	0.68/0.86
Temp. range of Cooling				21˚CDB/15.5˚CWB ~ 43˚CDB/35˚CWB 70˚FDB/60˚FWB ~ 109˚FDB/95˚FWB *Thermo-off (FAN-mode) automatically starts if the outdoor temperature is lower than 21˚CDB (70˚FDB).			
Heating capacity (Nominal)		✻3	kW	8.5	15.1	21.2	26.5
		✻3	kcal / h	7,300	13,000	18,200	22,800
		✻3	Btu / h	29,000	51,500	72,300	90,400
	✻4 Power input		kW	0.16/0.21	0.29/0.33	0.34/0.42	0.39/0.50
	✻4 Current input		A	0.67/0.91	1.24/1.48	0.58/0.74	0.68/0.86
Temp. range of Heating				-10˚CDB ~ 20˚CDB 14˚FDB ~ 68˚FDB *Thermo-off (FAN-mode) automatically starts if the outdoor temperature is higher than 20˚CDB (68˚FDB).			
External finish				Galvanized			
External dimension H x W x D			mm	380 x 1,000 x 900	380 x 1,200 x 900	470 x 1,250 x 1,120	470 x 1,250 x 1,120
			in.	15 x 39-3/8 x 35-7/16	15 x 47-2/8 x 35-7/16	18-9/16 x 49-1/4 x 44-1/8	18-9/16 x 49-1/4 x 44-1/8
Net weight			kg (lb)	50 (111)	70 (155)	100 (221)	100 (221)
Heat exchanger				Cross fin (Aluminum fin and copper tube)			
FAN	Type x Quantity			Sirocco fan x 1	Sirocco fan x 2	Sirocco fan x 2	Sirocco fan x 2
	External static press.	(208V)	Pa	<35> -85- <170>	<35> -85- <170>	<140> -200	<110> -190
			mmH_2O	<3.6> -8.7- <17.3>	<3.6> -8.7- <17.3>	<14.3> -20.4	<11.2> -19.4
		(220V)	Pa	<40> -115- <190>	<50> -115- <190>	<150> -210	<120> -200
			mmH_2O	<4.1> -11.7- <19.4>	<5.1> -11.7- <19.4>	<15.3> -21.4	<12.2> -20.4
		(230V)	Pa	<50> -130- <210>	<60> -130- <220>	<160> -220	<130> -210
			mmH_2O	<5.1> -13.3- <21.4>	<6.1> -13.3- <22.4>	<16.3> -22.4	<13.3> -21.4
		(240V)	Pa	<80> -170- <220>	<100> -170- <240>	-	-
		✻5	mmH_2O	<8.2> -17.3- <22.4>	<10.2> -17.3- <24.5>	-	-
	Motor type			Single phase induction motor		3-phase induction motor	
	Motor output		kW	0.09 (220V, 115Pa)	0.14 (220V, 115Pa)	0.20 (415V, 220Pa)	0.23 (415V, 210Pa)
	Driving mechanism			Direct-driven by motor			
	Airflow rate (Low-Mid-High)		m^3 / min	9.0	18.0	28.0	35.0
			L / s	150	300	467	583
			cfm	318	636	989	1,236
Sound pessure level (Low-Mid-High)/(Low-High) (measured in anechoic room)			dB <A>	27-38-43 (208,220V)	28-38-43 (208,220V)	39-42 (380V)	40-44 (380V)
			dB <A>	33-43-45 (230,240V)	34-43-45 (230,240V)	40-43 (400V)	40-45 (400V)
		✻4	dB <A>	-	-	40-44 (415V)	41-46 (415V)
Insulation material				EPS, Polyethylene foam			
Air filter				Optional long life filter (synthetic fiber unwoven cloth filter) and filter box are recommended. Field supplied filter is also possible.			
Protection device				Fuse			
Refrigerant control device				LEV			
Connectable outdoor unit				R410A CITY MULTI			
Diameter of refrigerant pipe	Liquid (R410A)		mm (in.)	ø9.52 (ø3/8) Flare	ø9.52 (ø3/8) Flare	ø9.52 (ø3/8) Brazed	ø9.52 (ø3/8) Brazed
	Gas (R410A)		mm (in.)	ø15.88 (ø5/8) Flare	ø15.88 (ø5/8) Flare	ø19.05 (ø3/4) Brazed	ø22.2 (ø7/8) Brazed
Field drain pipe size			mm (in.)	O.D. 32mm (1-1/4)			
Drawing	External			IU-W27-5926		IU-W27-7653	
	Wiring			IU-W65-3961		IU-W65-3999	
	Refrigerant cycle			-		-	
Standard attachment	Document			Installation Manual, Instruction Book			
	Accessory			Insulation pipe for refrigerant pipe, washer, drain hose, tie band, pipe			
Remark	Optional long life filter			PAC-KE88LAF	PAC-KE89LAF	PAC-KE85LAF	PAC-KE85LAF
	Optional filter box			PAC-KE80TB-F	PAC-KE140TB-F	PAC-KE250TB-F	PAC-KE250TB-F
	Drain pump			PAC-KE04DM-F	PAC-KE04DM-F	PAC-KE04DM-F	PAC-KE04DM-F
				a. When the PEFY-P-VMH-E-F is connected with the outdoor unit, the maximum connectable total indoor unit capacity is as follows. Heat pump model: 110% (100% in case of heating below -5˚C(23˚F)) Cooling only model: 110% b. Only the thermo-sensor in the remote controller or an extra remote thermo-sensor can be chosen as the room temperature sensor. c. No Auto mode or Dry mode is available. d. The fan temporally stops in defrosting. e. The air flow rate should be kept lower than 110% of value above. Please see "FAN Curve" for details. f. As PEFY-P-VMH-E-F cools the outdoor air directly, dewing at the air outlet grilles is possible, and should be considered. g. Air filter must be installed in the air intake side, and should be easy to maintain.			
	Installation			Details on foundation work, duct work, insulation work, electrical wiring, power source switch, and other items shall be referred to the Installation Manual.			

Note :

	✻1 Nominal cooling condition	✻2 Nominal cooling condition	✻3 Nominal heating condition
Indoor :	33˚CDB/28˚CWB (91˚FDB/82˚FWB)	-	0˚CDB/-2.9˚CDB (32˚FDB/27˚FDB)
Outdoor :	33˚CDB (91˚FDB)	-	0˚CDB/-2.9˚CDB (32˚FDB/27˚FDB)
Pipe length :	7.5 m (24-9/16 ft)	-	7.5 m (24-9/16 ft)
Level difference :	0 m (0 ft)	-	0 m (0 ft)

✻4 The values are measured at the rated external static pressure.
✻5 The figure in < > indicates the value when external static pressure is changed.

* Due to continuing improvement, above specification may be subject to change without notice.

Unit converter
kcal/h = kW x 860
Btu/h = kW x 3,412
cfm = m^3/min x 35.31
lb = kg / 0.4536

*Above specification data is subject to rounding variation.

Ref.: Spec_PEFY-P-VMH-E-F

PEFY-P80,140VMH-E-F

Drw. : IU-W27-5926
Unit : mm

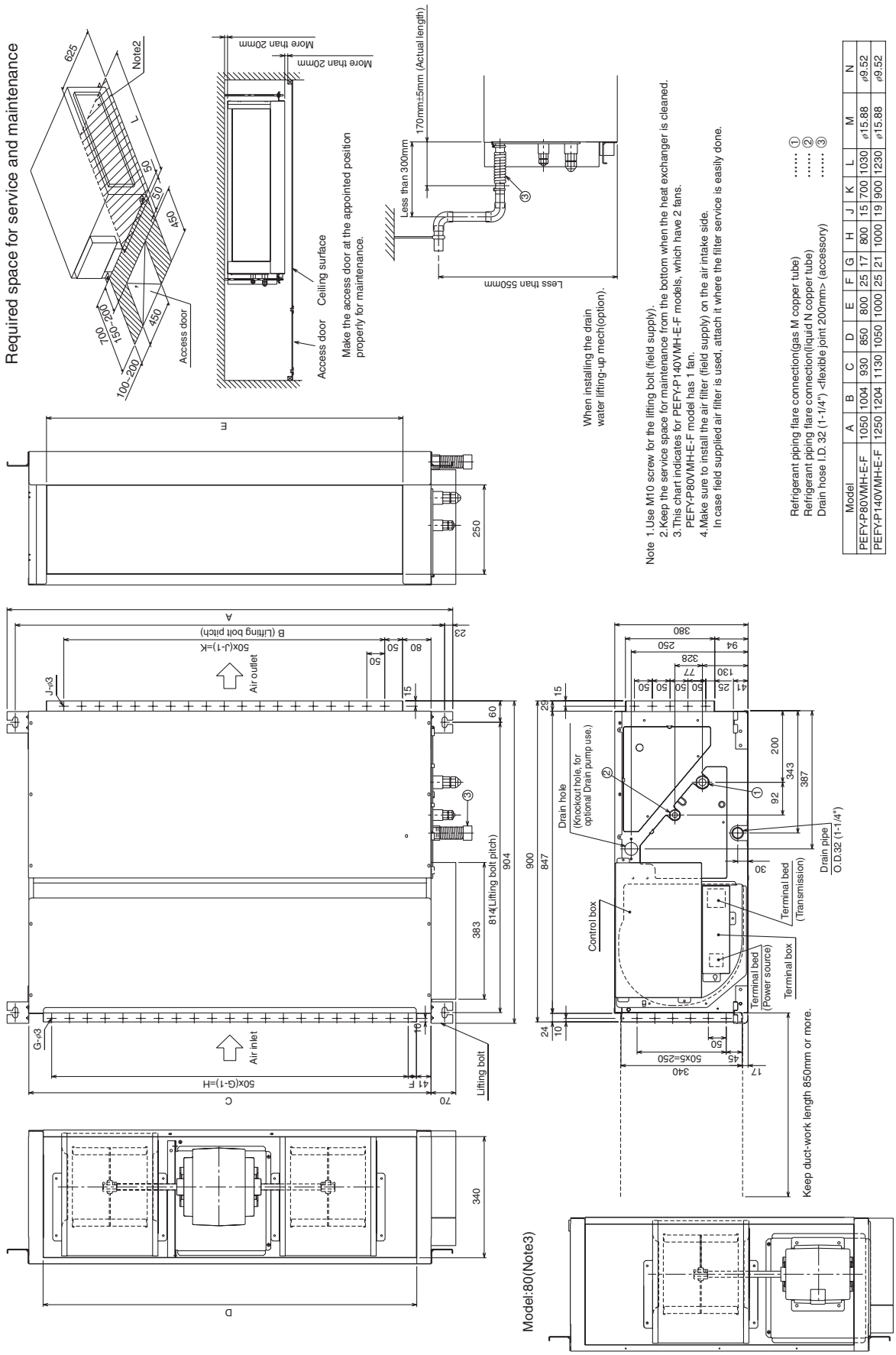

Note 1.Use M10 screw for the lifting bolt (field supply).
2.Keep the service space for maintenance from the bottom when the heat exchanger is cleaned.
3.This chart indicates for PEFY-P140VMH-E-F models, which have 2 fans.
PEFY-P80VMH-E-F model has 1 fan.
4.Make sure to install the air filter (field supply) on the air intake side.
In case field supplied air filter is used, attach it where the filter service is easily done.

Refrigerant piping flare connection(gas M copper tube) ..... ①
Refrigerant piping flare connection(liquid N copper tube) ..... ②
Drain hose I.D. 32 (1-1/4") <flexible joint 200mm> (accessory) ..... ③

Model	A	B	C	D	E	F	G	H	J	K	L	M	N
PEFY-P80VMH-E-F	1050	1004	930	850	800	25	17	800	15	700	1030	ø15.88	ø9.52
PEFY-P140VMH-E-F	1250	1204	1130	1050	1000	25	21	1000	19	900	1230	ø15.88	ø9.52

PEFY-E-F

PEFY-P200,250VMH-E-F

Drw. : IU-W27-7653
Unit : mm

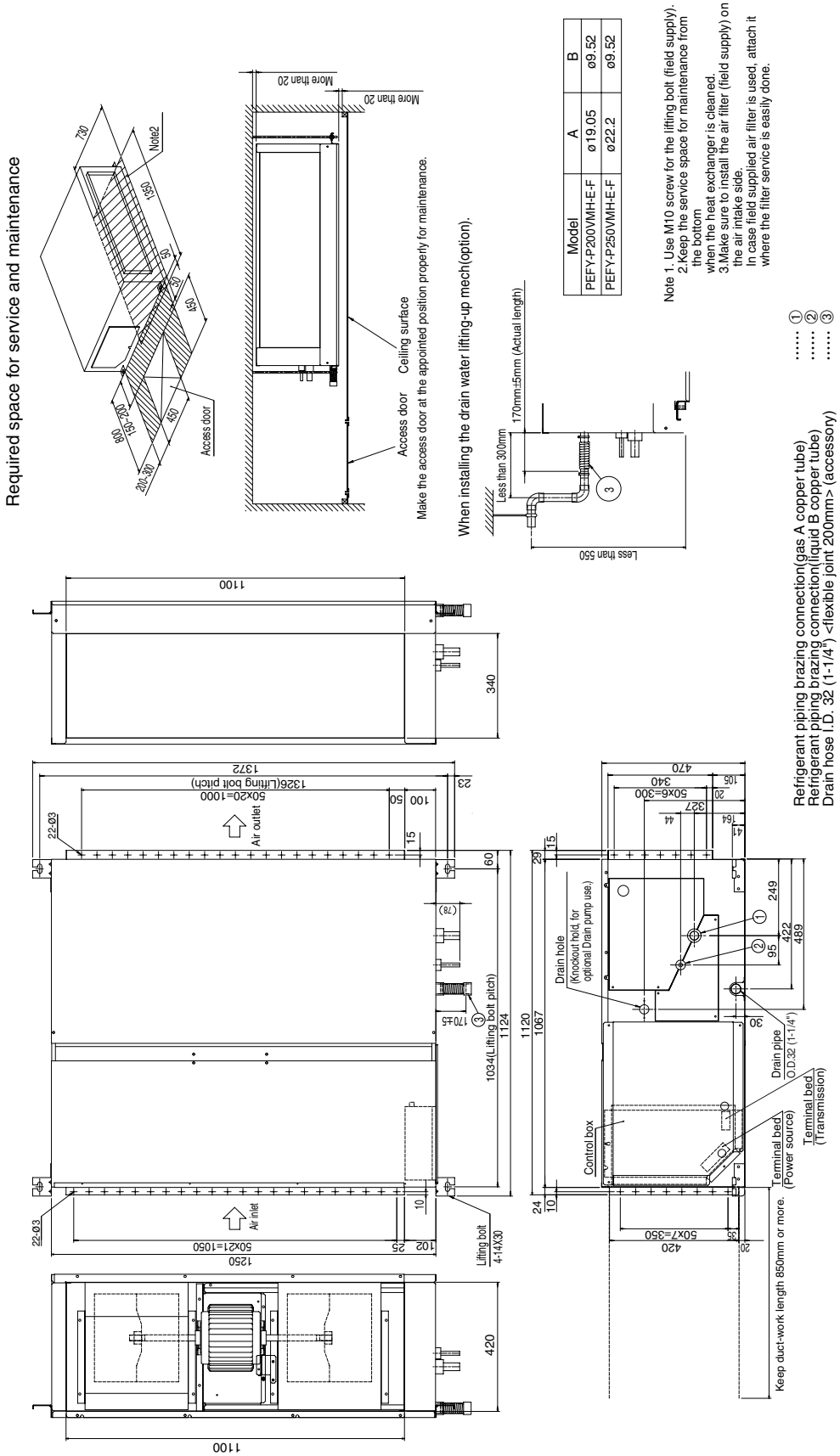

3. CENTER OF GRAVITY

PEFY-P80,140,200,250VMH-E-F

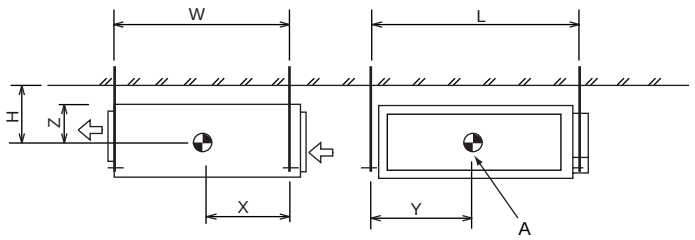

A: Center of gravity

(mm)[in]

Model name	W	L	H	X	Y	Z
PEFY-P80VMH-E-F	814 [32-1/16]	1004 [39-17/32]	210 [8-9/32]	394 [15-17/32]	584 [22-32/32]	190 [7-1/2]
PEFY-P140VMH-E-F	814 [32-1/16]	1204 [47-13/32]	210 [8-9/32]	364 [14-11/32]	649 [25-9/16]	190 [7-1/2]
PEFY-P200VMH-E-F	1034 [40-23/32]	1326 [52-7/32]	255 [10-1/16]	462 [18-7/32]	660 [25-32/32]	235 [9-9/32]
PEFY-P250VMH-E-F	1034 [40-23/32]	1326 [52-7/32]	255 [10-1/16]	462 [18-7/32]	660 [25-32/32]	235 [9-9/32]

PEFY-E-F

PEFY-P80,140VMH-E-F

Drw. : IU-W65-3961

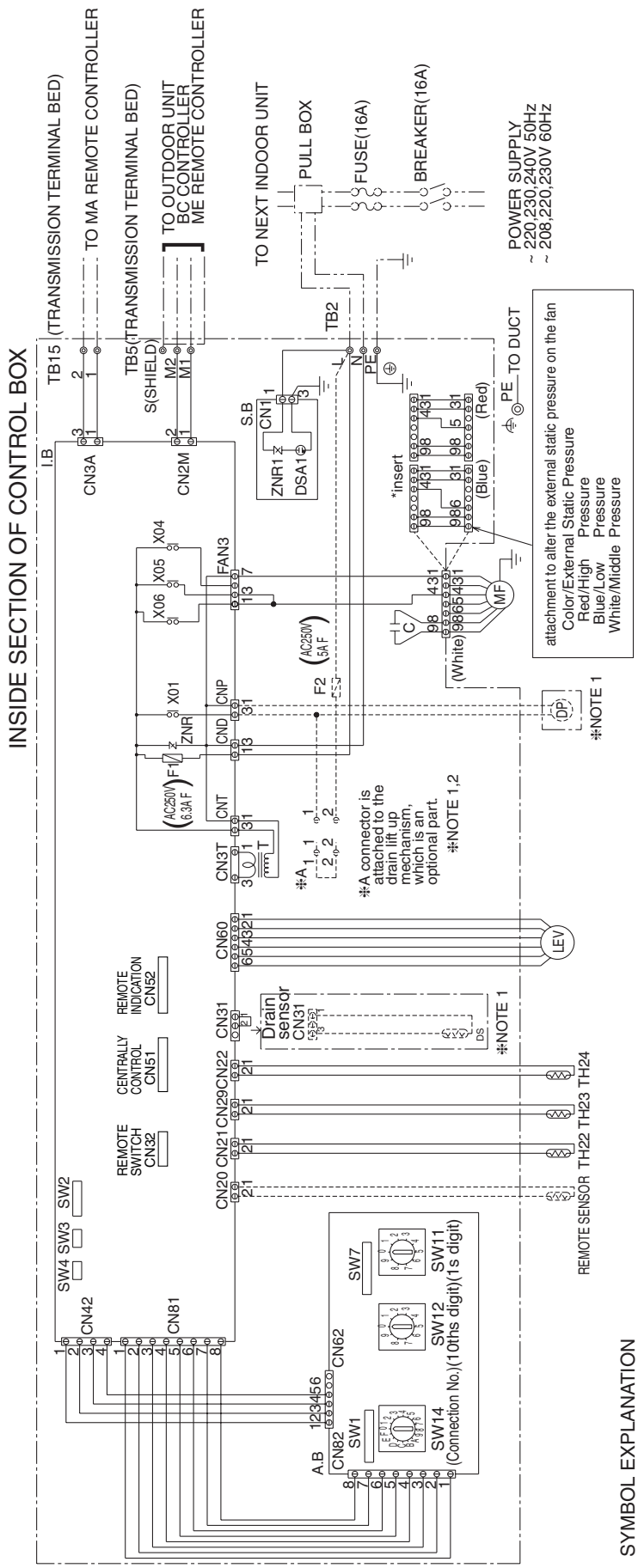

NOTE
1. The part of the broken line indicates the circuit for optional parts.
2. *A in the chart is the connector for a drain pump test run operation. (The Drain Pump operates continuously if the connector is inserted and the power is supplied.) After the test run, make sure to remove the *A connector.
3. The wirings to TB2,TB5 (shown in dotted line) are field work.
4. Mark ◎ indicates terminal bed, ⊖ connector, ⊟ board insertion connector or fastening connector of control board.

SYMBOL EXPLANATION

SYMBOL	NAME	SYMBOL	NAME
MF	Fan motor	CN20	Connector (remote sensor)
C	B Capacitor (for MF)	TH22	Thermistor (piping temp.detection/liquid)
I.B	Indoor controller board	TH23	Thermistor (piping temp.detection/gas)
<DS>	Drain sensor	TH24	Thermistor (outdoor air temp.detection)
A.B	Address board	SW11(A.B)	Switch (1s digit address set)
TB2	Power source terminal bed	SW12(A.B)	Switch (10ths digit address set)
TB5	Transmission terminal bed	SW14(A.B)	Switch (connection No.set)
TB15	Transmission terminal bed	SW1(A.B)	Switch(for mode selection)
F1	Fuse AC250V 6.3A F	SW2(I.B)	Switch(for capacity code)
<F2>	Fuse AC250V 5A F	SW3(I.B)	Switch(for mode selection)
T	Transformer	SW4(I.B)	Switch(for model selection)
<DP>	Drain Pump	SW7(A.B)	Switch(for model selection)
LEV	Electronic linear expan. valve	X04 ~ X06	Aux.relay
S.B	Surge absorber board		

Inside < > is the optional parts.

PEFY-P200,250VMH-E-F

Drw. : IU-W65-3999

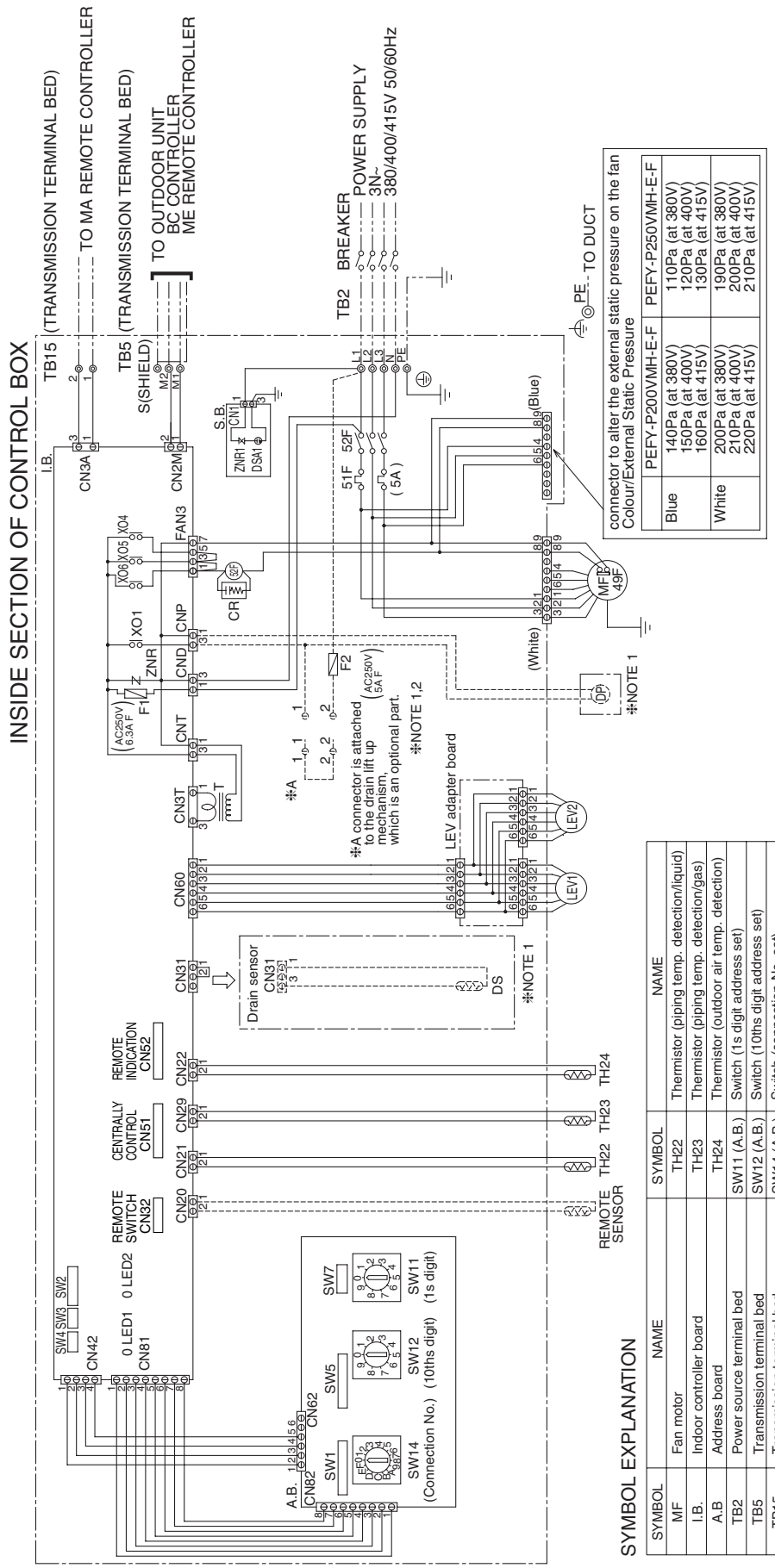

connector to alter the external static pressure on the fan
Colour/External Static Pressure

	PEFY-P200VMH-E-F	PEFY-P250VMH-E-F
Blue	140Pa (at 380V) 150Pa (at 400V) 160Pa (at 415V)	110Pa (at 380V) 120Pa (at 400V) 130Pa (at 415V)
White	200Pa (at 380V) 210Pa (at 400V) 220Pa (at 415V)	190Pa (at 380V) 200Pa (at 400V) 210Pa (at 415V)

CAUTION; 1. To protect Fan motor from abnormal current, Over current relays <51F> is installed.
Therefore, do not change factory set value of Over current relays.

NOTE; 1. The part of the broken line indicates the circuit for optional parts.
2. ※A in the chart is the connector for a drain pump test run operation.
(The Drain Pump operates continuously if the connector is inserted and the power is supplied.)
After the test run, make sure to remove the ※A connector.
3. The wirings to TB2,TB5 shown in dotted line are field work.
4. Mark ◎ indicates terminal bed, ⊖ connector, ⊟ board insertion connector or fastening connector of control board.

SYMBOL EXPLANATION

SYMBOL	NAME	SYMBOL	NAME
MF	Fan motor	TH22	Thermistor (piping temp. detection/liquid)
I.B.	Indoor controller board	TH23	Thermistor (piping temp. detection/gas)
A.B	Address board	TH24	Thermistor (outdoor air temp. detection)
TB2	Power source terminal bed	SW11 (A.B.)	Switch (1s digit address set)
TB5	Transmission terminal bed	SW12 (A.B.)	Switch (10ths digit address set)
TB15	Transmission terminal bed	SW14 (A.B.)	Switch (connection No. set)
F1	Fuse AC250V 6.3A F	SW1 (A.B.)	Switch (for mode selection)
<F2>	Fuse AC250V 5A F	SW2 (I.B.)	Switch (for capacity code)
T	Transformer	SW3 (I.B.)	Switch (for mode selection)
<DP>	Drain Pump	SW4 (I.B.)	Switch (for model selection)
LEV1,LEV2	Electronic linear expan. valve	SW5 (A.B.)	Switch (for voltage selection)
<DS>	Drain sensor	SW7 (A.B.)	Switch (for model selection)
S.B.	Surge absorber board	X04~X06	Aux. relay
52F	Contactor (fan motor)	49F	Inner thermostat
51F	Over current relay (fan motor)	LED1	Power Supply (I.B.)
		LED2	Power Supply (Remote Controller)

Inside < > is the optional parts.

PEFY-E-F

5. SOUND LEVELS

5-1. Sound levels

PEFY-P-VMH-E-F

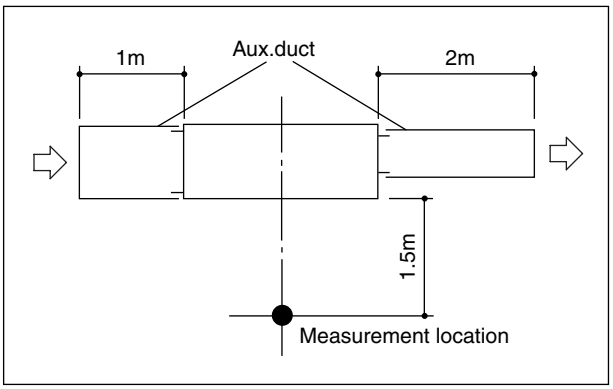

Sound level at anechoic room : Low-Mid-High, Low-High

		Sound level dB (A)
PEFY-P80VMH-E-F	208, 220V	27-38-43
	230, 240V	33-43-45
PEFY-P140VMH-E-F	208, 220V	28-38-43
	230, 240V	34-43-45
PEFY-P200VMH-E-F	380V	39-42
	400V	40-43
	415V	40-44
PEFY-P250VMH-E-F	380V	40-44
	400V	40-45
	415V	41-46

* Measured in anechoic room.

External static pressure : Low-Mid-High, Low-High

Unit : Pa

		PEFY-P80VMH-E-F	PEFY-P140VMH-E-F	PEFY-P200VMH-E-F	PEFY-P250VMH-E-F
External static press.(Pa)	50Hz	-	-	140-200 (380V)	110-190 (380V)
	60Hz	35-85-170 (208V)	35-85-170 (208V)	140-200 (380V)	110-190 (380V)
	50Hz	40-115-190 (220V)	50-115-190 (220V)	150-210 (400V)	120-200 (400V)
	60Hz	40-115-190 (220V)	50-115-190 (220V)	150-210 (400V)	120-200 (400V)
	50Hz	50-130-210 (230V)	60-130-220 (230V)	160-220 (415V)	130-210 (415V)
	60Hz	50-130-210 (230V)	60-130-220 (230V)	160-220 (415V)	130-210 (415V)
	50Hz	80-170-220 (240V)	100-170-240 (240V)		
	60Hz	-	-		

5-2. NC curves

PEFY-P80VMH-E-F
External static pressure : 35Pa
Power source : 208V, 60Hz

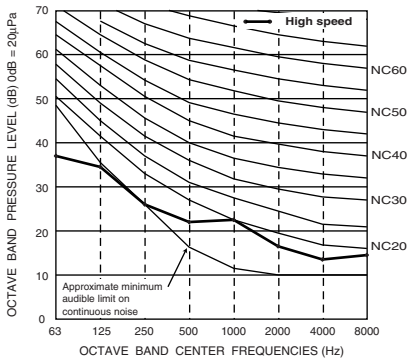

PEFY-P80VMH-E-F
External static pressure : 85Pa
Power source : 208V, 60Hz

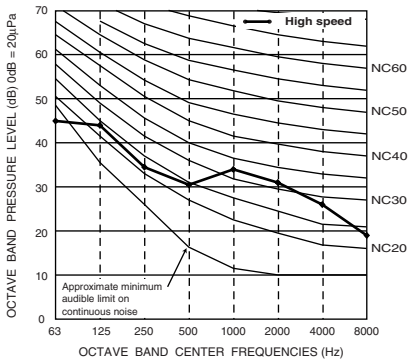

PEFY-P80VMH-E-F
External static pressure : 170Pa
Power source : 208V, 60Hz

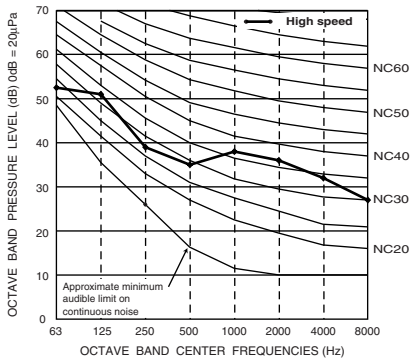

PEFY-P80VMH-E-F
External static pressure : 40Pa
Power source : 220V, 50/60Hz

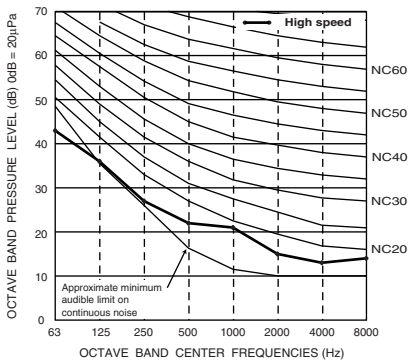

PEFY-P80VMH-E-F
External static pressure : 115Pa
Power source : 220V, 50/60Hz

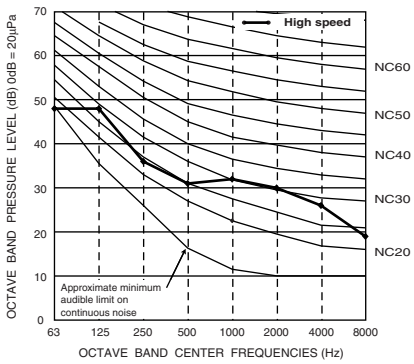

PEFY-P80VMH-E-F
External static pressure : 190Pa
Power source : 220V, 50/60Hz

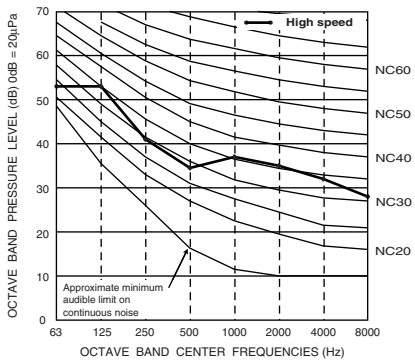

5. SOUND LEVELS

5-2. NC curves

PEFY-P80VMH-E-F
External static pressure : 50Pa
Power source : 230V, 50/60Hz

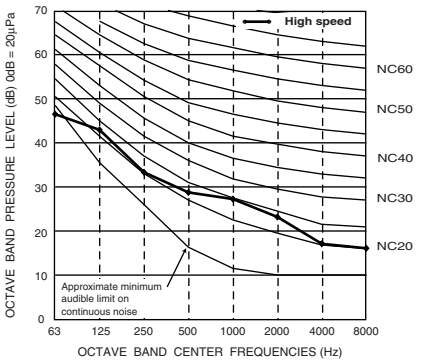

PEFY-P80VMH-E-F
External static pressure : 130Pa
Power source : 230V, 50/60Hz

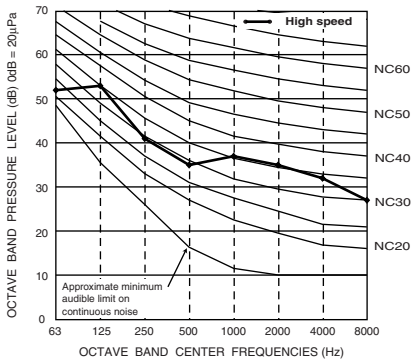

PEFY-P80VMH-E-F
External static pressure : 210Pa
Power source : 230V, 50/60Hz

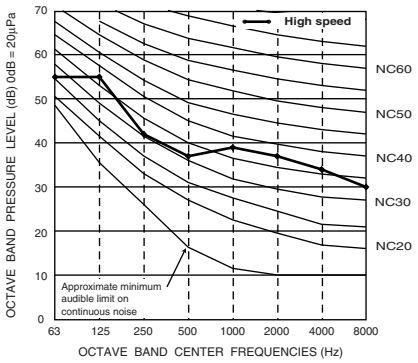

PEFY-P80VMH-E-F
External static pressure : 80Pa
Power source : 240V, 50Hz

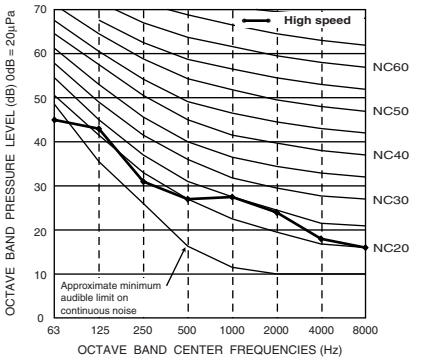

PEFY-P80VMH-E-F
External static pressure : 170Pa
Power source : 240V, 50Hz

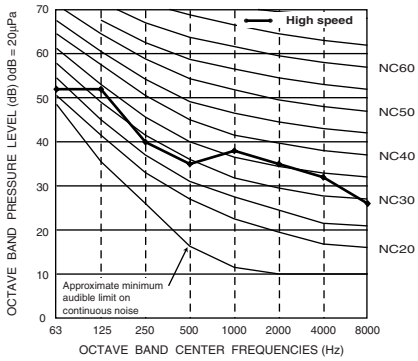

PEFY-P80VMH-E-F
External static pressure : 220Pa
Power source : 240V, 50Hz

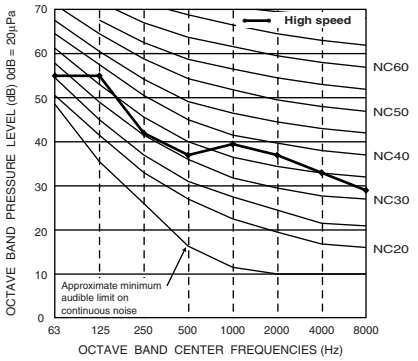

PEFY-P140VMH-E-F
External static pressure : 35Pa
Power source : 208V, 60Hz

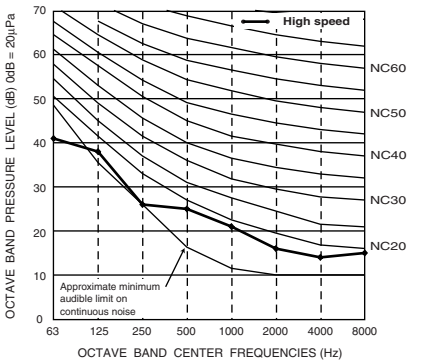

PEFY-P140VMH-E-F
External static pressure : 85Pa
Power source : 208V, 60Hz

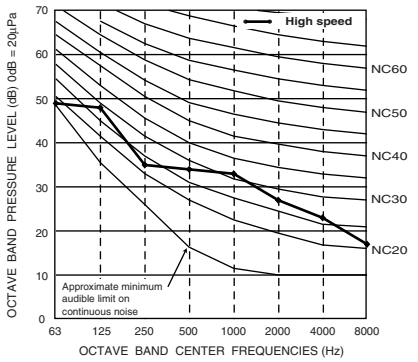

PEFY-P140VMH-E-F
External static pressure : 170Pa
Power source : 208V, 60Hz

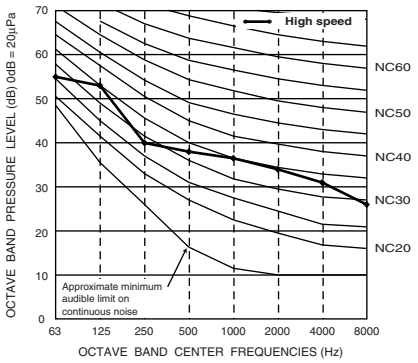

PEFY-P140VMH-E-F
External static pressure : 50Pa
Power source : 220V, 50/60Hz

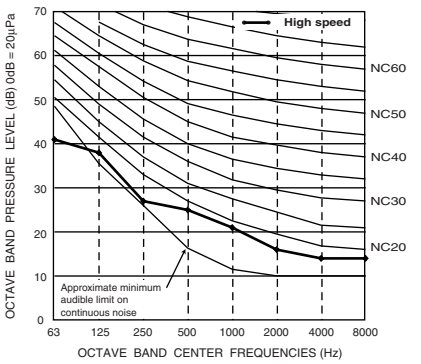

PEFY-P140VMH-E-F
External static pressure : 115Pa
Power source : 220V, 50/60Hz

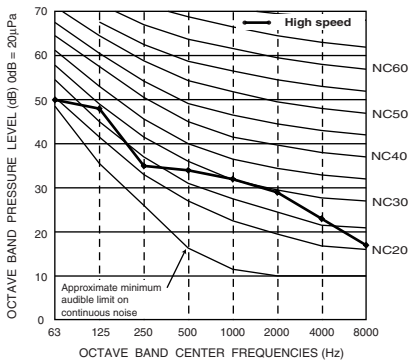

PEFY-P140VMH-E-F
External static pressure : 190Pa
Power source : 220V, 50/60Hz

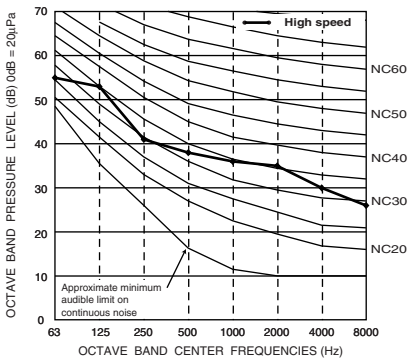

5. SOUND LEVELS

5-2. NC curves

PEFY-P140VMH-E-F
External static pressure : 60Pa
Power source : 230V, 50/60Hz

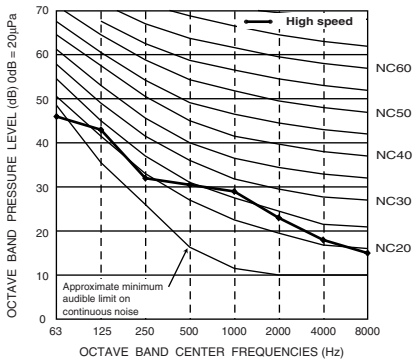

PEFY-P140VMH-E-F
External static pressure : 130Pa
Power source : 230V, 50/60Hz

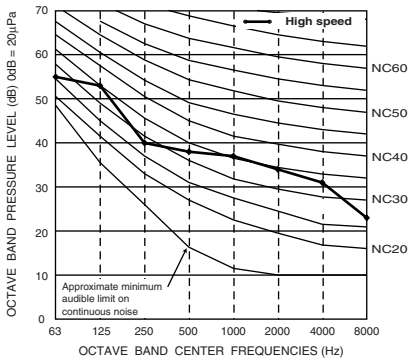

PEFY-P140VMH-E-F
External static pressure : 220Pa
Power source : 230V, 50/60Hz

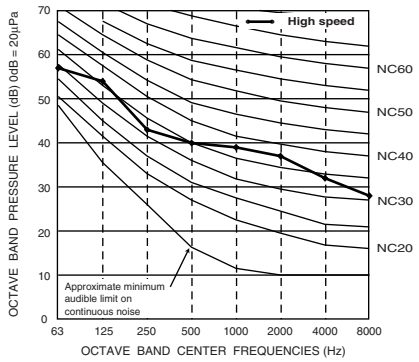

PEFY-P140VMH-E-F
External static pressure : 100Pa
Power source : 240V, 50Hz

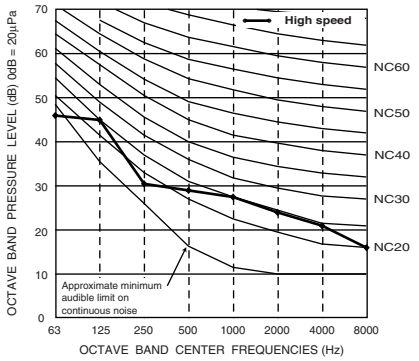

PEFY-P140VMH-E-F
External static pressure : 170Pa
Power source : 240V, 50Hz

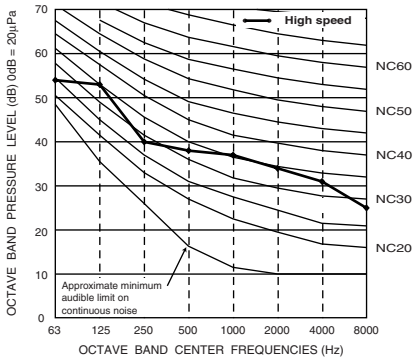

PEFY-P140VMH-E-F
External static pressure : 240Pa
Power source : 240V, 50Hz

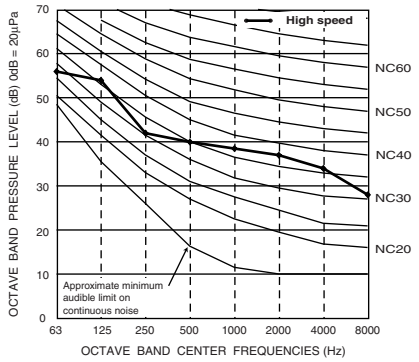

PEFY-P200VMH-E-F
External static pressure : 140Pa
Power source : 380V, 50/60Hz

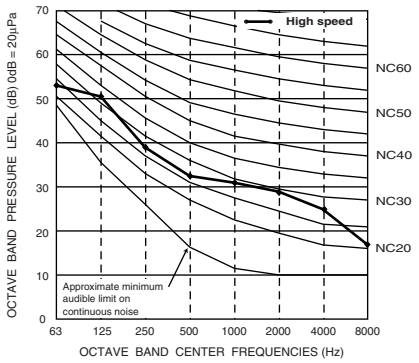

PEFY-P200VMH-E-F
External static pressure : 200Pa
Power source : 380V, 50/60Hz

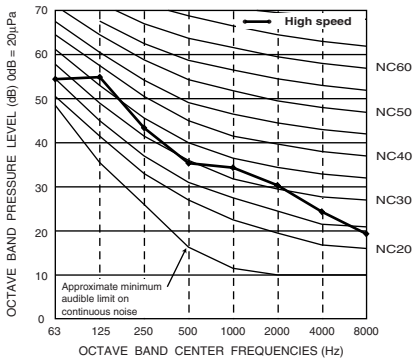

PEFY-P200VMH-E-F
External static pressure : 150Pa
Power source : 400V, 50/60Hz

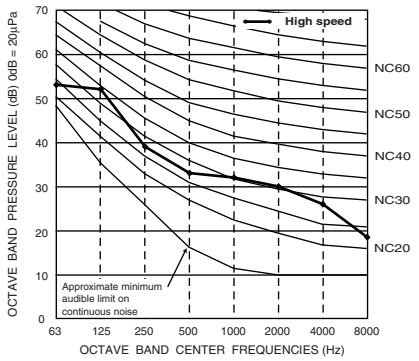

PEFY-P200VMH-E-F
External static pressure : 210Pa
Power source : 400V, 50/60Hz

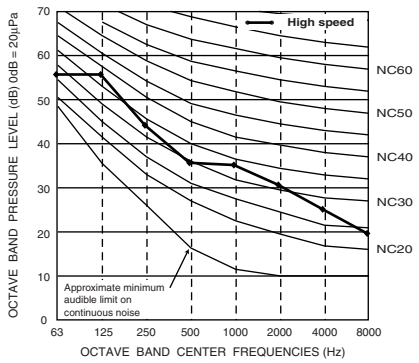

PEFY-P200VMH-E-F
External static pressure : 160Pa
Power source : 415V, 50/60Hz

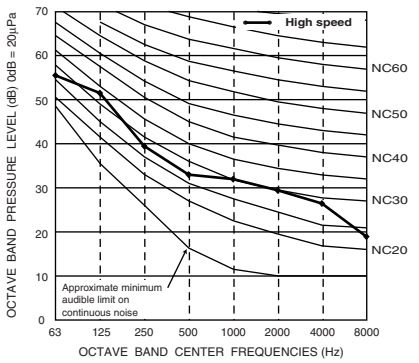

PEFY-P200VMH-E-F
External static pressure : 220Pa
Power source : 415V, 50/60Hz

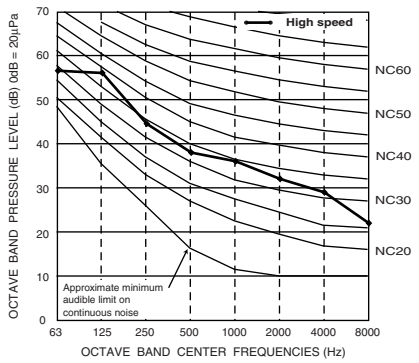

5. SOUND LEVELS

5-2. NC curves

PEFY-P250VMH-E-F
External static pressure : 110Pa
Power source : 380V, 50/60Hz

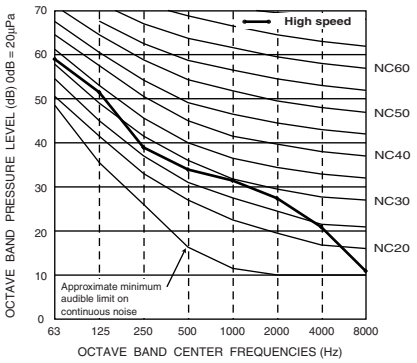

PEFY-P250VMH-E-F
External static pressure : 190Pa
Power source : 380V, 50/60Hz

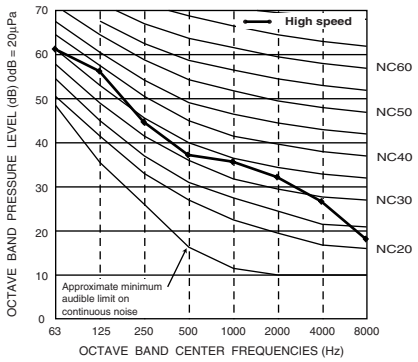

PEFY-P250VMH-E-F
External static pressure : 120Pa
Power source : 400V, 50/60Hz

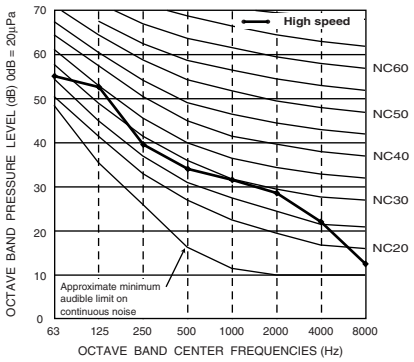

PEFY-P250VMH-E-F
External static pressure : 200Pa
Power source : 400V, 50/60Hz

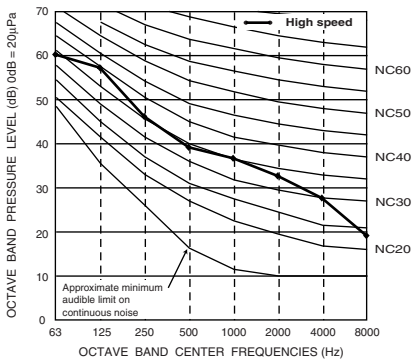

PEFY-P250VMH-E-F
External static pressure : 130Pa
Power source : 415V, 50/60Hz

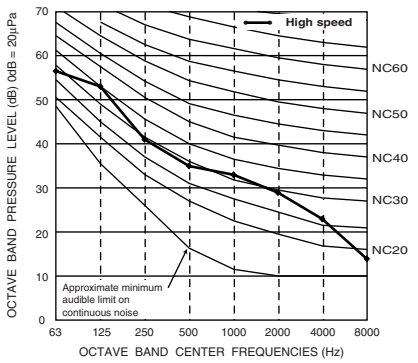

PEFY-P250VMH-E-F
External static pressure : 210Pa
Power source : 415V, 50/60Hz

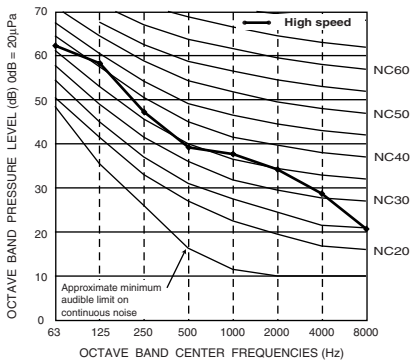

5-3. Fan characteristics curves

PEFY-P80VMH-E-F
External static pressure : 35,85,170Pa
Power source : 208V 60Hz

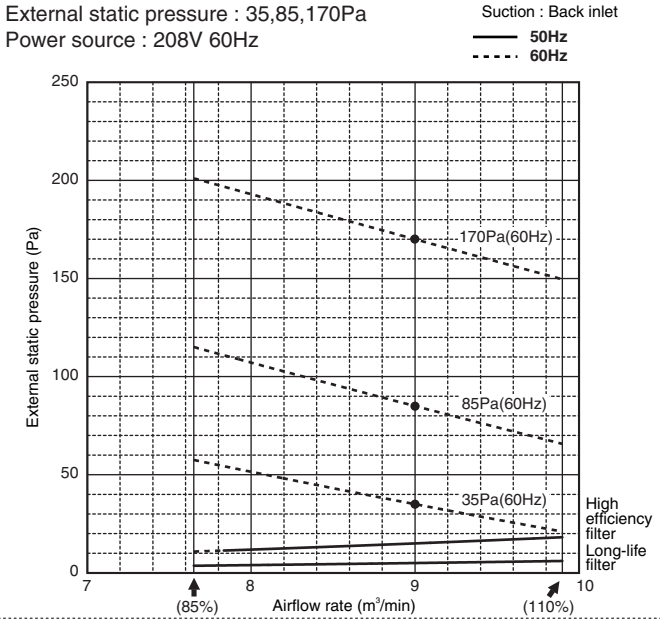

PEFY-P80VMH-E-F
External static pressure : 40,115,190Pa
Power source : 220V 50/60Hz

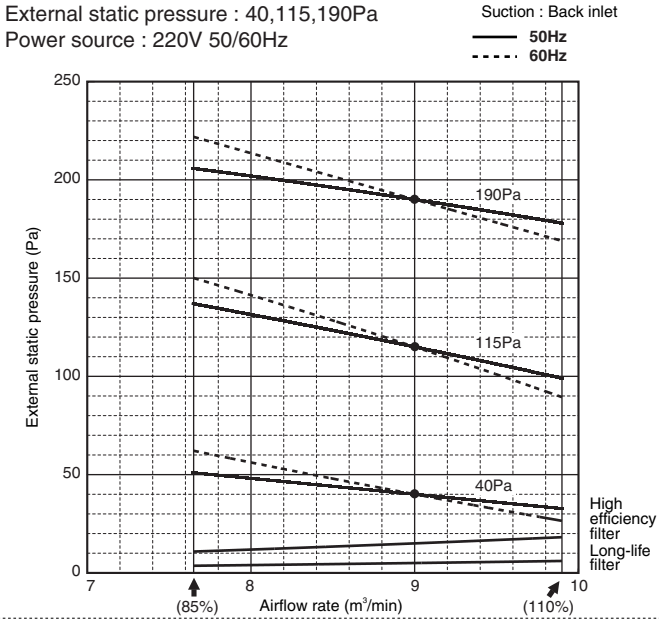

PEFY-P80VMH-E-F
External static pressure : 50,130,210Pa
Power source : 230V 50/60Hz

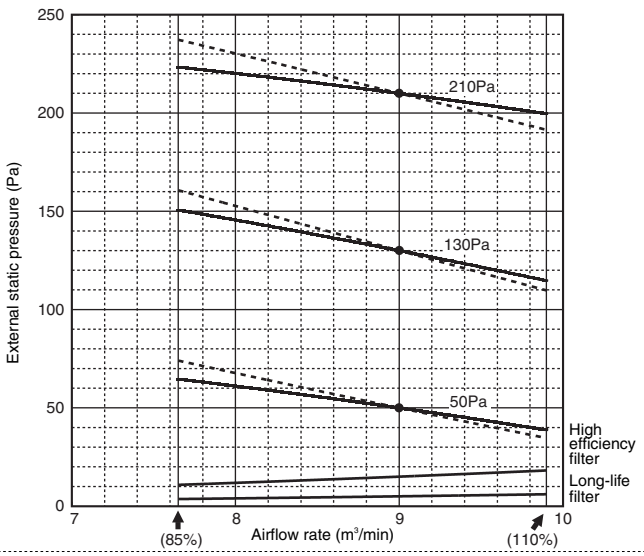

PEFY-P80VMH-E-F
External static pressure : 80,170,220Pa
Power source : 240V 50Hz

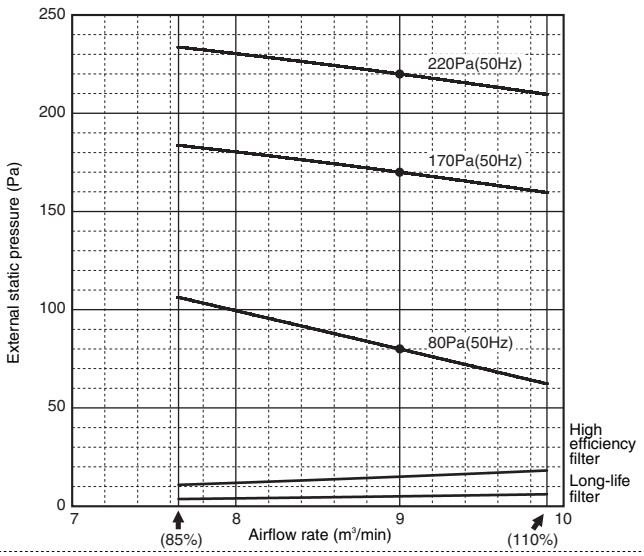

PEFY-P140VMH-E-F
External static pressure : 35,85,170Pa
Power source : 208V 60Hz

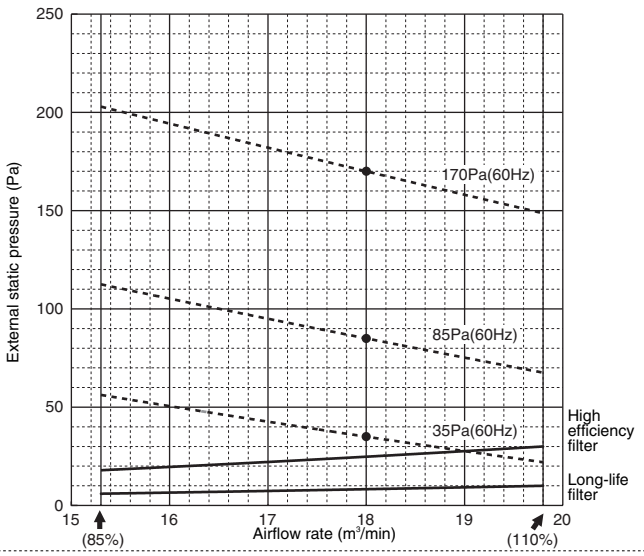

PEFY-P140VMH-E-F
External static pressure : 50,115,190Pa
Power source : 220V 50/60Hz

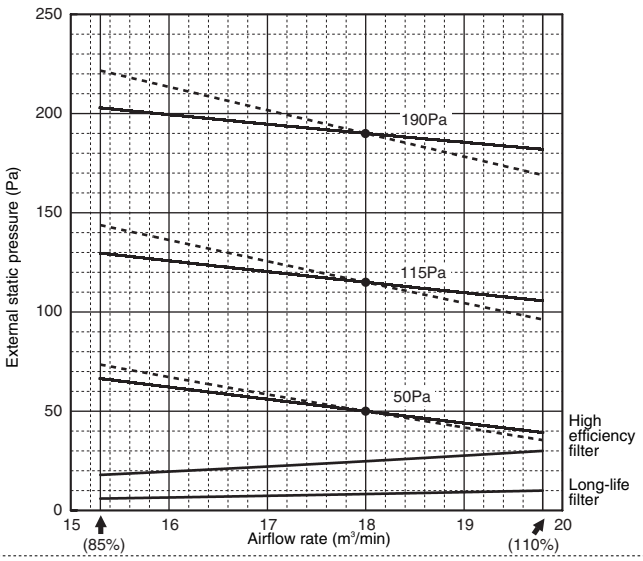

5-3. Fan characteristics curves

PEFY-P140VMH-E-F
External static pressure : 60,130,220Pa
Power source : 230V 50/60Hz

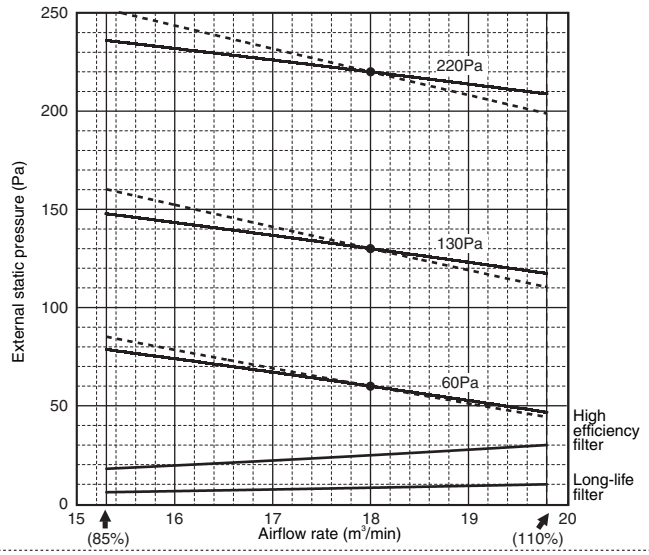

PEFY-P140VMH-E-F
External static pressure : 100,170,240Pa
Power source : 240V 50Hz

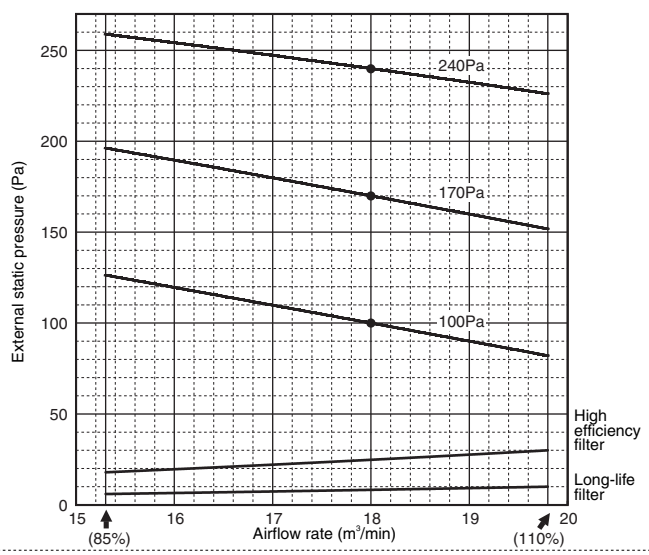

PEFY-P200VMH-E-F
External static pressure : 140,200Pa
Power source : 380V 50/60Hz

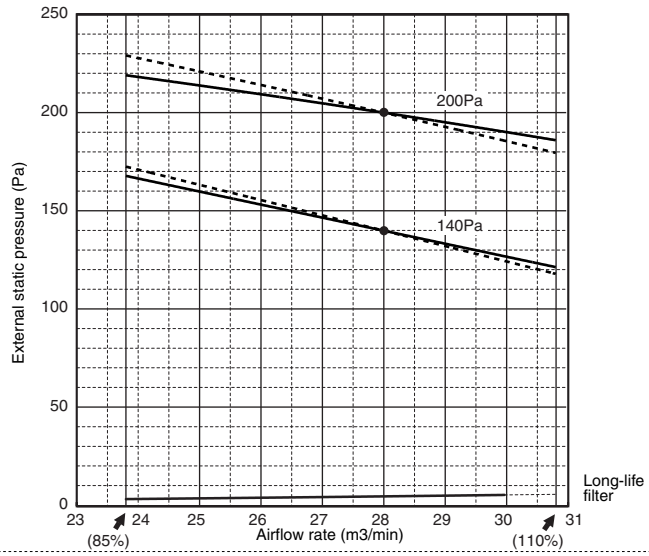

PEFY-P200VMH-E-F
External static pressure : 150,210Pa
Power source : 400V 50/60Hz

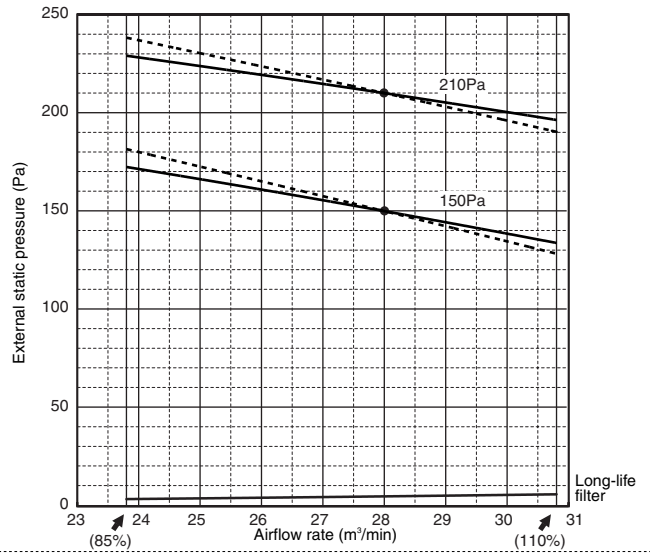

PEFY-P200VMH-E-F
External static pressure : 160,220Pa
Power source : 415V 50/60Hz

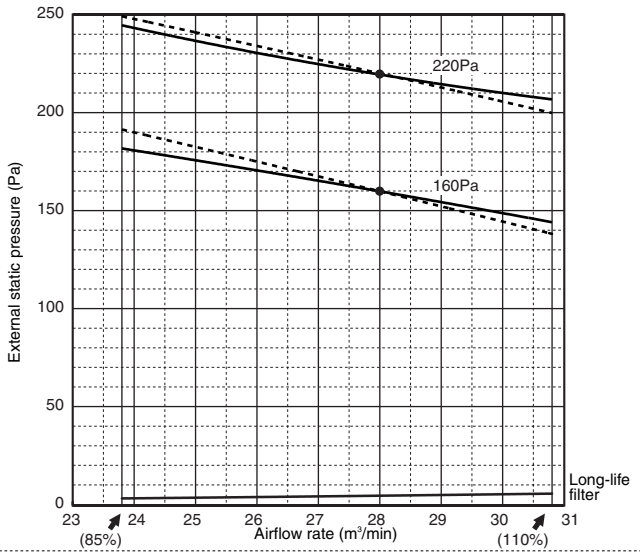

PEFY-E-F

5-3. Fan characteristics curves

PEFY-P250VMH-E-F
External static pressure : 110,190Pa
Power source : 380V 50/60Hz

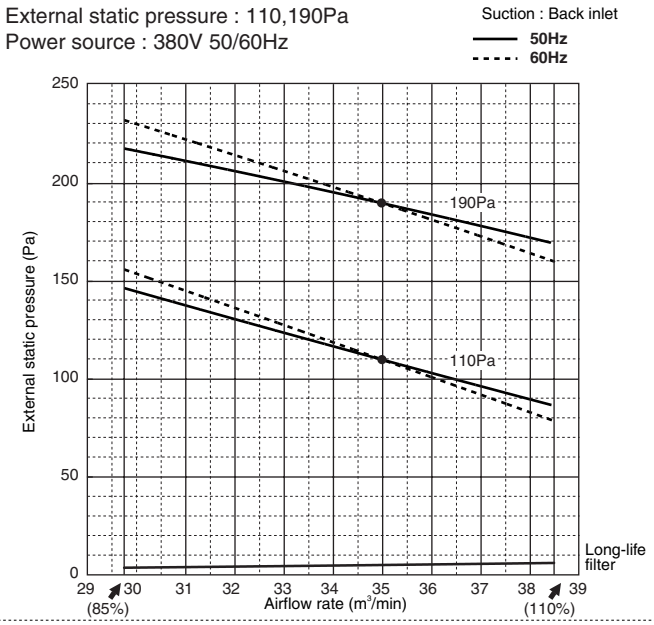

PEFY-P250VMH-E-F
External static pressure : 120,200Pa
Power source : 400V 50/60Hz

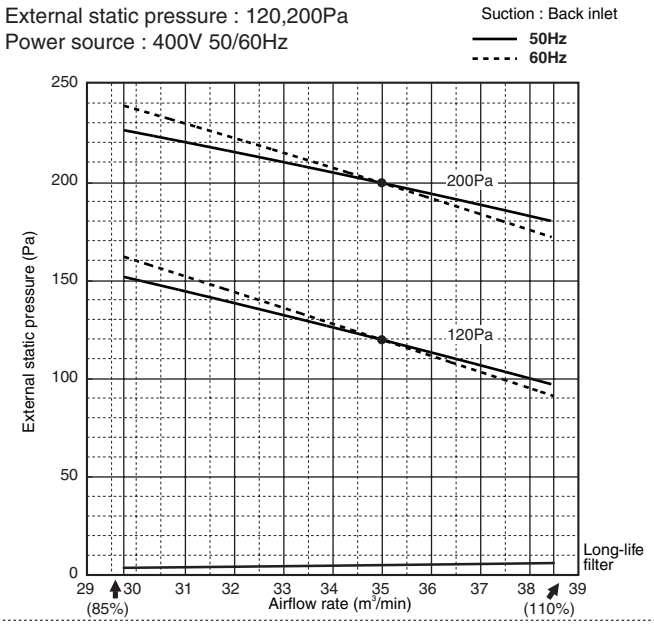

PEFY-P250VMH-E-F
External static pressure : 130,210Pa
Power source : 415V 50/60Hz

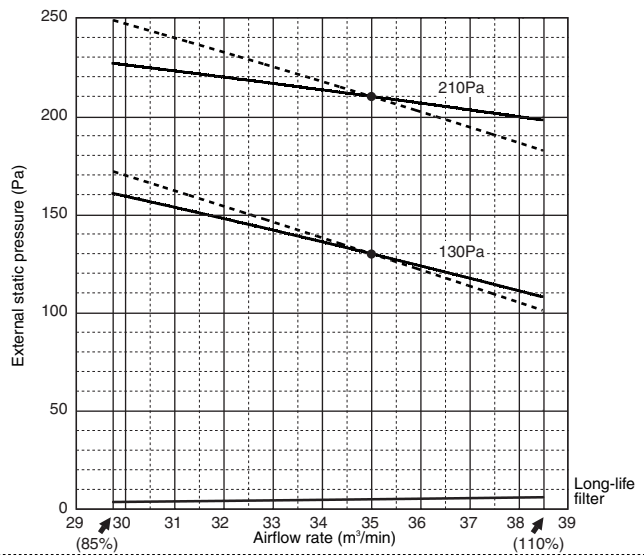

6. CAPACITY TABLES

6-1. Cooling capacity

CA :Capacity(kW)
SHC:Sensible Heat Capacity(kW)

PEFY-P80VMH-E-F

Outdoor air temp.		59˚FWB		63˚FWB		68˚FWB		73˚FWB		79˚FWB		82˚FWB		86˚FWB		90˚FWB		95˚FWB	
		15˚CWB		17˚CWB		20˚CWB		23˚CWB		26˚CWB		28˚CWB		30˚CWB		32˚CWB		35˚CWB	
˚FDB	˚CDB	CA	SHC	CA	SHC	CA	SHC	CA	SHC	CA	SHC	CA	SHC	CA	SHC	CA	SHC	CA	SHC
70	21	4.4	3.0	5.3	2.9	-	-	-	-	-	-	-	-	-	-	-	-	-	-
73	23	4.4	3.4	5.3	3.3	6.5	3.0	-	-	-	-	-	-	-	-	-	-	-	-
77	25	4.4	3.8	5.2	3.7	6.4	3.4	-	-	-	-	-	-	-	-	-	-	-	-
81	27	-	-	5.2	4.0	6.4	3.7	7.5	3.3	-	-	-	-	-	-	-	-	-	-
84	29	-	-	-	-	6.4	4.1	7.5	3.7	8.5	3.2	-	-	-	-	-	-	-	-
88	31	-	-	-	-	6.3	4.5	7.4	4.0	8.4	3.5	9.1	3.1	-	-	-	-	-	-
91	33	-	-	-	-	-	-	7.3	4.4	8.3	3.8	9.0	3.5	9.6	3.0	-	-	-	-
95	35	-	-	-	-	-	-	7.2	4.7	8.2	4.2	8.9	3.8	9.5	3.3	-	-	-	-
99	37	-	-	-	-	-	-	-	-	8.1	4.5	8.8	4.1	9.4	3.7	9.9	3.2	-	-
104	40	-	-	-	-	-	-	-	-	8.0	5.0	8.6	4.6	9.1	4.1	9.7	3.7	10.5	2.9

PEFY-P140VMH-E-F

Outdoor air temp.		59˚FWB		63˚FWB		68˚FWB		73˚FWB		79˚FWB		82˚FWB		86˚FWB		90˚FWB		95˚FWB	
		15˚CWB		17˚CWB		20˚CWB		23˚CWB		26˚CWB		28˚CWB		30˚CWB		32˚CWB		35˚CWB	
˚FDB	˚CDB	CA	SHC	CA	SHC	CA	SHC	CA	SHC	CA	SHC	CA	SHC	CA	SHC	CA	SHC	CA	SHC
70	21	7.8	5.6	9.4	5.3	-	-	-	-	-	-	-	-	-	-	-	-	-	-
73	23	7.8	6.3	9.3	6.0	11.5	5.4	-	-	-	-	-	-	-	-	-	-	-	-
77	25	7.8	7.1	9.3	6.8	11.5	6.1	-	-	-	-	-	-	-	-	-	-	-	-
81	27	-	-	9.3	7.5	11.4	6.8	13.4	6.0	-	-	-	-	-	-	-	-	-	-
84	29	-	-	-	-	11.3	7.5	13.3	6.7	15.2	5.6	-	-	-	-	-	-	-	-
88	31	-	-	-	-	11.2	8.2	13.2	7.3	15.0	6.3	16.2	5.5	-	-	-	-	-	-
91	33	-	-	-	-	-	-	13.0	8.0	14.8	7.0	16.0	6.2	17.1	5.3	-	-	-	-
95	35	-	-	-	-	-	-	12.9	8.7	14.6	7.6	15.8	6.8	16.9	6.0	-	-	-	-
99	37	-	-	-	-	-	-	-	-	14.5	8.3	15.6	7.5	16.6	6.6	17.7	5.7	-	-
104	40	-	-	-	-	-	-	-	-	14.2	9.3	15.2	8.5	16.3	7.6	17.3	6.7	18.7	5.3

PEFY-P200VMH-E-F

Outdoor air temp.		59˚FWB		63˚FWB		68˚FWB		73˚FWB		79˚FWB		82˚FWB		86˚FWB		90˚FWB		95˚FWB	
		15˚CWB		17˚CWB		20˚CWB		23˚CWB		26˚CWB		28˚CWB		30˚CWB		32˚CWB		35˚CWB	
˚FDB	˚CDB	CA	SHC	CA	SHC	CA	SHC	CA	SHC	CA	SHC	CA	SHC	CA	SHC	CA	SHC	CA	SHC
70	21	10.9	7.9	13.1	7.5	-	-	-	-	-	-	-	-	-	-	-	-	-	-
73	23	11.0	9.0	13.1	8.5	16.1	7.6	-	-	-	-	-	-	-	-	-	-	-	-
77	25	11.0	10.1	13.0	9.6	16.0	8.6	-	-	-	-	-	-	-	-	-	-	-	-
81	27	-	-	13.0	10.7	15.9	9.7	18.8	8.4	-	-	-	-	-	-	-	-	-	-
84	29	-	-	-	-	15.8	10.7	18.6	9.4	21.2	7.9	-	-	-	-	-	-	-	-
88	31	-	-	-	-	15.7	11.7	18.4	10.4	21.0	8.9	22.6	7.7	-	-	-	-	-	-
91	33	-	-	-	-	-	-	18.2	11.4	20.7	9.8	22.4	8.7	23.9	7.5	-	-	-	-
95	35	-	-	-	-	-	-	18.0	12.4	20.5	10.8	22.1	9.6	23.6	8.4	-	-	-	-
99	37	-	-	-	-	-	-		-	20.2	11.8	21.8	10.6	23.3	9.4	24.7	8.1	-	-
104	40	-	-	-	-	-	-		-	19.8	13.2	21.3	12.0	22.8	10.8	24.2	9.5	26.2	7.47

PEFY-P250VMH-E-F

Outdoor air temp.		59˚FWB		63˚FWB		68˚FWB		73˚FWB		79˚FWB		82˚FWB		86˚FWB		90˚FWB		95˚FWB	
		15˚CWB		17˚CWB		20˚CWB		23˚CWB		26˚CWB		28˚CWB		30˚CWB		32˚CWB		35˚CWB	
˚FDB	˚CDB	CA	SHC	CA	SHC	CA	SHC	CA	SHC	CA	SHC	CA	SHC	CA	SHC	CA	SHC	CA	SHC
70	21	13.7	9.9	16.4	9.3	-	-	-	-	-	-	-	-	-	-	-	-	-	-
73	23	13.7	11.3	16.3	10.7	20.2	9.5	-	-	-	-	-	-	-	-	-	-	-	-
77	25	13.7	12.6	16.3	12.0	20.1	10.8	-	-	-	-	-	-	-	-	-	-	-	-
81	27	-	-	16.2	13.3	19.9	12.1	23.4	10.5	-	-	-	-	-	-	-	-	-	-
84	29	-	-	-	-	19.8	13.4	23.2	11.7	26.5	9.8	-	-	-	-	-	-	-	-
88	31	-	-	-	-	19.6	14.7	23.0	13.0	26.2	11.1	28.3	9.7	-	-	-	-	-	-
91	33	-	-	-	-	-	-	22.8	14.2	25.9	12.3	28.0	10.9	29.9	9.3	-	-	-	-
95	35	-	-	-	-	-	-	22.5	15.5	25.6	13.5	27.6	12.1	29.5	10.5	-	-	-	-
99	37	-	-	-	-	-	-	-	-	25.3	14.7	27.2	13.3	29.1	11.7	30.9	10.1	-	-
104	40	-	-	-	-	-	-	-	-	24.8	16.5	26.6	15.0	28.4	13.5	30.2	11.9	32.7	9.34

There are times when the cooling capacity is lowered to protect the compressor in cases where the outdoor air temperature exceeds 40˚C (104˚F)

6-2. Outlet air temp. cooled

PEFY-P80VMH-E-F

Outdoor air temp.		59˚FWB		63˚FWB		68˚FWB		73˚FWB		79˚FWB		82˚FWB		86˚FWB		90˚FWB		95˚FWB	
		15˚CWB		17˚CWB		20˚CWB		23˚CWB		26˚CWB		28˚CWB		30˚CWB		32˚CWB		35˚CWB	
˚FDB	˚CDB	˚CDB	˚CWB	˚CDB	˚CWB	˚CDB	˚CWB	˚CDB	˚CWB	˚CDB	˚CWB	˚CDB	˚CWB	˚CDB	˚CWB	˚CDB	˚CWB	˚CDB	˚CWB
70	21	5.1	5.0	5.6	5.6	-	-	-	-	-	-	-	-	-	-	-	-	-	-
73	23	5.1	5.0	5.7	5.6	7.0	7.0	-	-	-	-	-	-	-	-	-	-	-	-
77	25	5.1	5.0	5.7	5.7	7.1	7.1	-	-	-	-	-	-	-	-	-	-	-	-
81	27	-	-	5.8	5.7	7.2	7.2	9.2	9.2	-	-	-	-	-	-	-	-	-	-
84	29	-	-	-	-	7.4	7.3	9.4	9.4	12.0	12.0	-	-	-	-	-	-	-	-
88	31	-	-	-	-	7.5	7.4	9.6	9.6	12.2	12.2	14.2	14.2	-	-	-	-	-	-
91	33	-	-	-	-	-	-	9.8	9.7	12.4	12.4	14.4	14.4	16.6	16.6	-	-	-	-
95	35	-	-	-	-	-	-	10.0	9.9	12.6	12.6	14.6	14.6	16.8	16.8	-	-	-	-
99	37	-	-	-	-	-	-	-	-	12.8	12.8	14.9	14.8	17.1	17.1	19.5	19.5	-	-
104	40	-	-	-	-	-	-	-	-	13.2	13.1	15.3	15.2	17.5	17.4	19.9	19.8	23.7	23.7

PEFY-P140VMH-E-F

Outdoor air temp.		59˚FWB		63˚FWB		68˚FWB		73˚FWB		79˚FWB		82˚FWB		86˚FWB		90˚FWB		95˚FWB	
		15˚CWB		17˚CWB		20˚CWB		23˚CWB		26˚CWB		28˚CWB		30˚CWB		32˚CWB		35˚CWB	
˚FDB	˚CDB	˚CDB	˚CWB	˚CDB	˚CWB	˚CDB	˚CWB	˚CDB	˚CWB	˚CDB	˚CWB	˚CDB	˚CWB	˚CDB	˚CWB	˚CDB	˚CWB	˚CDB	˚CWB
70	21	6.3	6.3	7.1	7.0	-	-	-	-	-	-	-	-	-	-	-	-	-	-
73	23	6.3	6.3	7.1	7.1	8.7	8.7	-	-	-	-	-	-	-	-	-	-	-	-
77	25	6.4	6.3	7.2	7.1	8.8	8.8	-	-	-	-	-	-	-	-	-	-	-	-
81	27	-	-	7.2	7.1	8.9	8.9	11.1	11.1	-	-	-	-	-	-	-	-	-	-
84	29	-	-	-	-	9.0	9.0	11.2	11.2	13.9	13.9	-	-	-	-	-	-	-	-
88	31	-	-	-	-	9.1	9.0	11.4	11.3	14.0	14.0	16.1	16.1	-	-	-	-	-	-
91	33	-	-	-	-	-	-	11.5	11.5	14.2	14.2	16.2	16.2	18.4	18.4	-	-	-	-
95	35	-	-	-	-	-	-	11.7	11.6	14.4	14.4	16.4	16.4	18.6	18.6	-	-	-	-
99	37	-	-	-	-	-	-	-	-	14.6	14.5	16.7	16.6	18.8	18.8	21.2	21.1	-	-
104	40	-	-	-	-	-	-	-	-	14.9	14.8	17.0	16.9	19.2	19.1	21.5	21.5	25.2	25.2

PEFY-P200VMH-E-F

Outdoor air temp.		59˚FWB		63˚FWB		68˚FWB		73˚FWB		79˚FWB		82˚FWB		86˚FWB		90˚FWB		95˚FWB	
		15˚CWB		17˚CWB		20˚CWB		23˚CWB		26˚CWB		28˚CWB		30˚CWB		32˚CWB		35˚CWB	
˚FDB	˚CDB	˚CDB	˚CWB	˚CDB	˚CWB	˚CDB	˚CWB	˚CDB	˚CWB	˚CDB	˚CWB	˚CDB	˚CWB	˚CDB	˚CWB	˚CDB	˚CWB	˚CDB	˚CWB
70	21	7.6	7.2	8.3	8.2	-	-	-	-	-	-	-	-	-	-	-	-	-	-
73	23	7.7	7.2	8.5	8.2	10.0	10.0	-	-	-	-	-	-	-	-	-	-	-	-
77	25	7.8	7.2	8.6	8.2	10.3	10.1	-	-	-	-	-	-	-	-	-	-	-	-
81	27	-	-	8.8	8.2	10.5	10.1	12.5	12.4	-	-	-	-	-	-	-	-	-	-
84	29	-	-	-	-	10.7	10.2	12.8	12.6	15.3	15.3	-	-	-	-	-	-	-	-
88	31	-	-	-	-	10.9	10.3	13.0	12.7	15.6	15.4	17.5	17.5	-	-	-	-	-	-
91	33	-	-	-	-	-	-	13.3	12.8	15.9	15.6	17.7	17.6	19.8	19.8	-	-	-	-
95	35	-	-	-	-	-	-	13.6	12.9	16.1	15.7	18.1	17.8	20.1	20.0	-	-	-	-
99	37	-	-	-	-	-	-	-	-	16.4	15.9	18.4	17.9	20.4	20.1	22.6	22.4	-	-
104	40	-	-	-	-	-	-	-	-	16.9	16.1	18.8	18.2	20.9	20.4	23.1	22.7	26.5	26.3

PEFY-P250VMH-E-F

Outdoor air temp.		59˚FWB		63˚FWB		68˚FWB		73˚FWB		79˚FWB		82˚FWB		86˚FWB		90˚FWB		95˚FWB	
		15˚CWB		17˚CWB		20˚CWB		23˚CWB		26˚CWB		28˚CWB		30˚CWB		32˚CWB		35˚CWB	
˚FDB	˚CDB	˚CDB	˚CWB	˚CDB	˚CWB	˚CDB	˚CWB	˚CDB	˚CWB	˚CDB	˚CWB	˚CDB	˚CWB	˚CDB	˚CWB	˚CDB	˚CWB	˚CDB	˚CWB
70	21	7.6	7.2	8.3	8.2	-	-	-	-	-	-	-	-	-	-	-	-	-	-
73	23	7.7	7.2	8.5	8.2	10.0	10.0	-	-	-	-	-	-	-	-	-	-	-	-
77	25	7.8	7.2	8.6	8.2	10.3	10.1	-	-	-	-	-	-	-	-	-	-	-	-
81	27	-	-	8.8	8.2	10.5	10.1	12.5	12.4	-	-	-	-	-	-	-	-	-	-
84	29	-	-	-	-	10.7	10.2	12.8	12.6	15.3	15.3	-	-	-	-	-	-	-	-
88	31	-	-	-	-	10.9	10.3	13.0	12.7	15.6	15.4	17.5	17.5	-	-	-	-	-	-
91	33	-	-	-	-	-	-	13.3	12.8	15.9	15.6	17.7	17.6	19.8	19.8	-	-	-	-
95	35	-	-	-	-	-	-	13.6	12.9	16.1	15.7	18.1	17.8	20.1	20.0	-	-	-	-
99	37	-	-	-	-	-	-	-	-	16.4	15.9	18.4	17.9	20.4	20.1	22.6	22.4	-	-
104	40	-	-	-	-	-	-	-	-	16.9	16.1	18.8	18.2	20.9	20.4	23.1	22.7	26.5	26.3

6-3. Heating capacity

PEFY-P80VMH-E-F

SHC:Sensible Heat Capacity(kW)

Outdoor air temp.		16˚FWB	23˚FWB	27˚FWB	32˚FWB	36˚FWB	39˚FWB	43˚FWB	50˚FWB	57˚FWB
		-9˚CWB	-5˚CWB	-2.9˚CWB	0˚CWB	2˚CWB	4˚CWB	6˚CWB	10˚CWB	14˚CWB
˚FDB	˚CDB	SHC	SHC	SHC	SHC	SHC	SHC	SHC	SHC	SHC
18	-8	8.2	-	-	-	-	-	-	-	-
27	-3	-	9.1	-	-	-	-	-	-	-
32	0	-	-	8.5	-	-	-	-	-	-
37	3	-	-	-	7.9	7.9	-	-	-	-
45	7	-	-	-	-	7.1	7.1	7.1	-	-
52	11	-	-	-	-	-	-	6.3	6.3	-
59	15	-	-	-	-	-	-	-	5.5	5.5
64	18	-	-	-	-	-	-	-	5.0	5.0
68	20	-	-	-	-	-	-	-	-	4.6

PEFY-P140VMH-E-F

Outdoor air temp.		16˚FWB	23˚FWB	27˚FWB	32˚FWB	36˚FWB	39˚FWB	43˚FWB	50˚FWB	57˚FWB
		-9˚CWB	-5˚CWB	-2.9˚CWB	0˚CWB	2˚CWB	4˚CWB	6˚CWB	10˚CWB	14˚CWB
˚FDB	˚CDB	SHC	SHC	SHC	SHC	SHC	SHC	SHC	SHC	SHC
18	-8	14.6	-	-	-	-	-	-	-	-
27	-3	-	16.2	-	-	-	-	-	-	-
32	0	-	-	15.1	-	-	-	-	-	-
37	3	-	-	-	14.0	14.0	-	-	-	-
45	7	-	-	-	-	12.6	12.6	12.6	-	-
52	11	-	-	-	-	-	-	11.2	11.2	-
59	15	-	-	-	-	-	-	-	9.8	9.8
64	18	-	-	-	-	-	-	-	8.8	8.8
68	20	-	-	-	-	-	-	-	-	8.1

PEFY-P200VMH-E-F

Outdoor air temp.		16˚FWB	23˚FWB	27˚FWB	32˚FWB	36˚FWB	39˚FWB	43˚FWB	50˚FWB	57˚FWB
		-9˚CWB	-5˚CWB	-2.9˚CWB	0˚CWB	2˚CWB	4˚CWB	6˚CWB	10˚CWB	14˚CWB
˚FDB	˚CDB	SHC	SHC	SHC	SHC	SHC	SHC	SHC	SHC	SHC
18	-8	20.5	-	-	-	-	-	-	-	-
27	-3	-	22.7	-	-	-	-	-	-	-
32	0	-	-	21.2	-	-	-	-	-	-
37	3	-	-	-	19.7	19.7	-	-	-	-
45	7	-	-	-	-	17.8	17.8	17.8	-	-
52	11	-	-	-	-	-	-	15.8	15.8	-
59	15	-	-	-	-	-	-	-	13.8	13.8
64	18	-	-	-	-	-	-	-	12.3	12.3
68	20	-	-	-	-	-	-	-	-	11.4

PEFY-P250VMH-E-F

Outdoor air temp.		16˚FWB	23˚FWB	27˚FWB	32˚FWB	36˚FWB	39˚FWB	43˚FWB	50˚FWB	57˚FWB
		-9˚CWB	-5˚CWB	-2.9˚CWB	0˚CWB	2˚CWB	4˚CWB	6˚CWB	10˚CWB	14˚CWB
˚FDB	˚CDB	SHC	SHC	SHC	SHC	SHC	SHC	SHC	SHC	SHC
18	-8	25.7	-	-	-	-	-	-	-	-
27	-3	-	28.3	-	-	-	-	-	-	-
32	0	-	-	26.5	-	-	-	-	-	-
37	3	-	-	-	24.7	24.7	-	-	-	-
45	7	-	-	-	-	22.2	22.2	22.2	-	-
52	11	-	-	-	-	-	-	19.7	19.7	-
59	15	-	-	-	-	-	-	-	17.3	17.3
64	18	-	-	-	-	-	-	-	15.4	15.4
68	20	-	-	-	-	-	-	-	-	14.2

6-4. Outlet air temp. heated

PEFY-P80VMH-E-F

Outdoor air temp.		16˚FWB	23˚FWB	27˚FWB	32˚FWB	36˚FWB	39˚FWB	43˚FWB	50˚FWB	57˚FWB
		-9˚CWB	-5˚CWB	-2.9˚CWB	0˚CWB	2˚CWB	4˚CWB	6˚CWB	10˚CWB	14˚CWB
˚FDB	˚CDB	˚CDB	˚CDB	˚CDB	˚CDB	˚CDB	˚CDB	˚CDB	˚CDB	˚CDB
18	-8	40.6	-	-	-	-	-	-	-	-
27	-3	-	53.1	-	-	-	-	-	-	-
32	0	-	-	51.9	-	-	-	-	-	-
37	3	-	-	-	51.3	51.8	-	-	-	-
45	7	-	-	-	-	50.5	50.5	50.9	-	-
52	11	-	-	-	-	-	-	49.6	50.1	-
59	15	-	-	-	-	-	-	-	48.8	49.2
64	18	-	-	-	-	-	-	-	48.2	48.2
68	20	-	-	-	-	-	-	-	-	47.8

PEFY-P140VMH-E-F

Outdoor air temp.		16˚FWB	23˚FWB	27˚FWB	32˚FWB	36˚FWB	39˚FWB	43˚FWB	50˚FWB	57˚FWB
		-9˚CWB	-5˚CWB	-2.9˚CWB	0˚CWB	2˚CWB	4˚CWB	6˚CWB	10˚CWB	14˚CWB
˚FDB	˚CDB	˚CDB	˚CDB	˚CDB	˚CDB	˚CDB	˚CDB	˚CDB	˚CDB	˚CDB
18	-8	34.7	-	-	-	-	-	-	-	-
27	-3	-	45.8	-	-	-	-	-	-	-
32	0	-	-	45.6	-	-	-	-	-	-
37	3	-	-	-	45.4	45.4	-	-	-	-
45	7	-	-	-	-	45.2	45.2	45.2	-	-
52	11	-	-	-	-	-	-	45.0	45.0	-
59	15	-	-	-	-	-	-	-	44.7	45.1
64	18	-	-	-	-	-	-	-	44.6	44.6
68	20	-	-	-	-	-	-	-	-	44.4

PEFY-P200VMH-E-F

Outdoor air temp.		16˚FWB	23˚FWB	27˚FWB	32˚FWB	36˚FWB	39˚FWB	43˚FWB	50˚FWB	57˚FWB
		-9˚CWB	-5˚CWB	-2.9˚CWB	0˚CWB	2˚CWB	4˚CWB	6˚CWB	10˚CWB	14˚CWB
˚FDB	˚CDB	˚CDB	˚CDB	˚CDB	˚CDB	˚CDB	˚CDB	˚CDB	˚CDB	˚CDB
18	-8	29.7	-	-	-	-	-	-	-	-
27	-3	-	40.0	-	-	-	-	-	-	-
32	0	-	-	40.3	-	-	-	-	-	-
37	3	-	-	-	40.6	40.7	-	-	-	-
45	7	-	-	-	-	40.8	40.9	41.0	-	-
52	11	-	-	-	-	-	-	41.2	41.4	-
59	15	-	-	-	-	-	-	-	41.5	41.7
64	18	-	-	-	-	-	-	-	41.7	41.8
68	20	-	-	-	-	-	-	-	-	41.9

PEFY-P250VMH-E-F

Outdoor air temp.		16˚FWB	23˚FWB	27˚FWB	32˚FWB	36˚FWB	39˚FWB	43˚FWB	50˚FWB	57˚FWB
		-9˚CWB	-5˚CWB	-2.9˚CWB	0˚CWB	2˚CWB	4˚CWB	6˚CWB	10˚CWB	14˚CWB
˚FDB	˚CDB	˚CDB	˚CDB	˚CDB	˚CDB	˚CDB	˚CDB	˚CDB	˚CDB	˚CDB
18	-8	29.7	-	-	-	-	-	-	-	-
27	-3	-	40.0	-	-	-	-	-	-	-
32	0	-	-	40.3	-	-	-	-	-	-
37	3	-	-	-	40.6	40.7	-	-	-	-
45	7	-	-	-	-	40.8	40.9	41.0	-	-
52	11	-	-	-	-	-	-	41.2	41.4	-
59	15	-	-	-	-	-	-	-	41.5	41.7
64	18	-	-	-	-	-	-	-	41.6	41.8
68	20	-	-	-	-	-	-	-	-	41.9

7. Optional parts for PEFY-P-VMH-E-F

■ Optional parts line up for the Indoor unit

	Long-life filter	Filter box	Drain pump
PEFY-P80VMH-E-F	PAC-KE88LAF	PAC-KE80TB-F	PAC-KE04DM-F
PEFY-P100VMH-E-F	PAC-KE89LAF	PAC-KE140TB-F	PAC-KE04DM-F
PEFY-P200VMH-E-F	PAC-KE85LAF	PAC-KE250TB-F	PAC-KE04DM-F
PEFY-P250VMH-E-F	PAC-KE85LAF	PAC-KE250TB-F	PAC-KE04DM-F

● PEFY-P-VMH-E-F

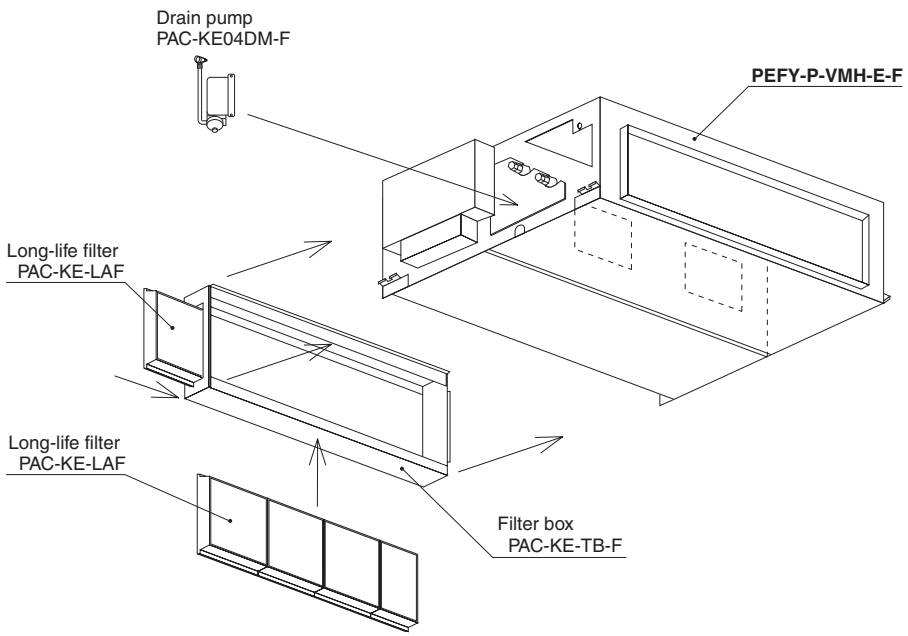

■ Long-life filter PAC-KE-LAF and filter box PAC-KE-TB-F for PEFY-P-VMH-E-F

Life span: 2,500 hr (Dust concentration 0.15mg/m^3)

* The actual dust situation affects the filter life span, which should be considered at the applying site.

Material: Synthetic fiber unwoven cloth filter

Static pressure loss is referred to 3-3 “Fan characteristics curves” at Data G2 IU-C-11 to 13.

Long-life filter should be used together with filter box PAC-KE-TB-F.

PAC-KE-LAF

Item	PAC-KE86LAF	PAC-KE88LAF	PAC-KE89LAF	PAC-KE85LAF
Quantity	2	3	3	2
Shape	(298X300) 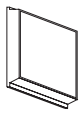	(298X300) 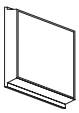	(298X300) 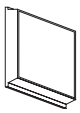	(411X600) 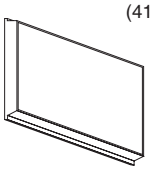

Detailed installation information should be referred to its Installation Manual (WT02574X04)

PAC-KE-TB-F

Item	① Screw	② Filter box	③ Installation manual	
Quantity	10	1	1	
Shape		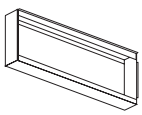	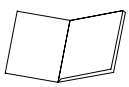	

Detailed installation information should be referred to its Installation Manual (WT03018X02, WT03019X02)

7. Optional parts for PEFY-P-VMH-E-F

■ Optional parts line up for the Indoor unit

	Long-life filter	Filter box	Drain pump
PEFY-P80VMH-E-F	PAC-KE88LAF	PAC-KE80TB-F	PAC-KE04DM-F
PEFY-P100VMH-E-F	PAC-KE89LAF	PAC-KE140TB-F	PAC-KE04DM-F
PEFY-P200VMH-E-F	PAC-KE85LAF	PAC-KE250TB-F	PAC-KE04DM-F
PEFY-P250VMH-E-F	PAC-KE85LAF	PAC-KE250TB-F	PAC-KE04DM-F

■ Drain pump PAC-KE04DM-F

If drain water can not flow out the Indoor unit by gravity and gradient, a Drain-pump for draining is needed.
Drain pump PAC-KE04DM-F can pump water up to 550mm high from the drain pan.

Item	① Drain pump ass'y	② Separator	③ Rubber plug	④ Connector	⑤ Dummy connector
Quantity	1	1	2	1	1
Shape	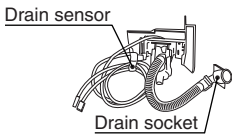	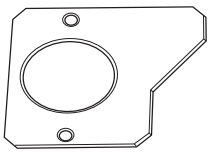		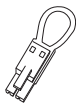	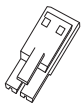
Item	⑥ Rubber bushing	⑦ Band	⑧ PTT screw 4X10	⑨ Fixing plate	⑩ Installation manual
Quantity	1	2	6+1 (spare)	1	1
Shape		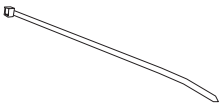		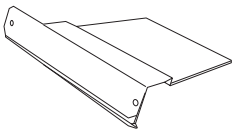	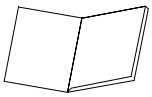

Detailed installation information should be referred to its Installation Manual (WT03312X02)

PMFY-P-VBM-E

1. SPECIFICATIONS 1 - 98

2. EXTERNAL DIMENSIONS 1 - 99

3. CENTER OF GRAVITY 1 - 100

4. ELECTRICAL WIRING DIAGRAMS 1 - 101

5. SOUND LEVELS
   5-1. Sound levels 1 - 102
   5-2. NC curve 1 - 102

6. TEMPERATURE/AIRFLOW DISTRIBUTIONS
   6-1. Temperature distributions 1 - 103
   6-2. Airflow distributions 1 - 103

1. SPECIFICATIONS

Model			PMFY-P20VBM-E	PMFY-P25VBM-E	PMFY-P32VBM-E	PMFY-P40VBM-E
Power source			1-phase 220-240V 50Hz, 1-phase 220V 60Hz			
Cooling capacity (Nominal)	✻1	kW	2.2	2.8	3.6	4.5
	✻1	kcal / h	1,900	2,400	3,100	3,900
	✻1	Btu / h	7,500	9,600	12,300	15,400
	✻2	kcal / h	2,000	2,500	3,150	4,000
✻4	Power input	kW	0.042	0.044	0.044	0.054
✻4	Current input	A	0.20	0.21	0.21	0.26
Heating capacity (Nominal)	✻3	kW	2.5	3.2	4.0	5.0
	✻3	kcal / h	2,200	2,800	3,400	4,300
	✻3	Btu / h	8,500	10,900	13,600	17,100
✻4	Power input	kW	0.042	0.044	0.044	0.054
✻4	Current input	A	0.20	0.21	0.21	0.26
External finish			Galvanized, with grey insulation sheet			
External dimension H x W x D		mm	230 x 812 x 395			
		in.	9-1/16 x 32 x 15-9/16			
Net weight		kg (lb)	14 (31)			
Decoration panel	Model		PMP-40BM	PMP-40BM	PMP-40BM	PMP-40BM
	External finish		MUNSELL (0.98Y 8.99/0.63)			
	Dimension H x W x D	mm	30 x 1,000 x 470			
		in.	1-3/16 x 39-3/8 x 18-9/16			
	Net Weight	kg (lb)	3 (7)			
Heat exchanger			Cross fin (Aluminum fin and copper tube)			
FAN	Type x Quantity		Line flow fan x 1			
	External static press.	Pa	0			
		mmH_2O	0			
	Motor type		1-phase induction motor			
	Motor output	kW	0.028			
	Driving mechanism		Direct-driven by motor			
	Airflow rate (Low-Mid-High)	m^3 / min	6.5 - 7.2 - 8.0 - 8.7	7.3 - 8.0 - 8.6 - 9.3	7.3 - 8.0 - 8.6 - 9.3	7.7 - 8.7 - 9.7 - 10.7
		L / s	108 - 120 - 133 - 145	122 - 133 - 143 - 155	122 - 133 - 143 - 155	128 - 145 - 162 - 178
		cfm	230 - 254 - 283 - 307	258 - 283 - 304 - 328	258 - 283 - 304 - 328	272 - 307 - 343 - 378
Sound pressure level (Low-Mid-High) (measured in anechoic room) ✻4		dB <A>	27 - 30 - 33 - 35	32 - 34 - 36 - 37	32 - 34 - 36 - 37	33 - 35 - 37 - 39
Insulation material			Polyester sheet			
Air filter			PP honeycomb fabric			
Protection device			Fuse			
Refrigerant control device			LEV			
Connectable outdoor unit			R410A CITY MULTI			
Diameter of refrigerant pipe	Liquid (R410A)	mm (in.)	ø6.35 (ø1/4) Flare	ø6.35 (ø1/4) Flare	ø6.35 (ø1/4) Flare	ø6.35 (ø1/4) Flare
	Gas (R410A)	mm (in.)	ø12.7 (ø1/2) Flare	ø12.7 (ø1/2) Flare	ø12.7 (ø1/2) Flare	ø12.7 (ø1/2) Flare
Field drain pipe size		mm (in.)	O.D. 26 (1)			
Drawing	External		IU-BH01-C184			
	Wiring		IU-RG79-A671			
	Refrigerant cycle					
Standard attachment	Document		Installation Manual, Instruction Book			
	Accessory		Drain hose I.D. 26 (1) (flexible joint)			
Remark	Optional parts					
	Decoration panel		PMP-40BM	PMP-40BM	PMP-40BM	PMP-40BM
			*PMFY-P-VBM-E should used together with PMP-40BM			
	Installation		Details on foundation work, duct work, insulation work, electrical wiring, power source switch, and other items shall be referred to the Installation Manual.			

Note :

	✻1 Nominal cooling conditions	✻2 Nominal cooling conditions	✻3 Nominal heating conditions
Indoor :	27˚CDB/19˚CWB (81˚FDB/66˚FWB)	27˚CDB/19.5˚CWB (81˚FDB/67˚FWB)	20˚CDB (68˚FDB)
Outdoor :	35˚CDB (95˚FDB)	35˚CDB (95˚FDB)	7˚CDB/6˚CWB (45˚FDB/43˚FWB)
Pipe length :	7.5 m (24-9/16 ft)	5 m (16-3/8 ft)	7.5 m (24-9/16 ft)
Level difference :	0 m (0 ft)	0 m (0 ft)	0 m (0 ft)

* Nominal conditions ✻1, ✻3 are subject to JIS B8615-1.
* Due to continuing improvement, above specification may be subject to change without notice.

✻4 The values are measured at the rated external static pressure.

Unit converter

kcal/h = kW x 860
Btu/h = kW x 3,412
cfm = m^3/min x 35.31
lb = kg / 0.4536

*Above specification data is subject to rounding variation.

Ref.: Spec_PMFY-P20VBM-E

2. EXTERNAL DIMENSIONS

PMFY-P20,25,32,40VBM-E

Drw. : IU-BH01-C184
Unit : mm

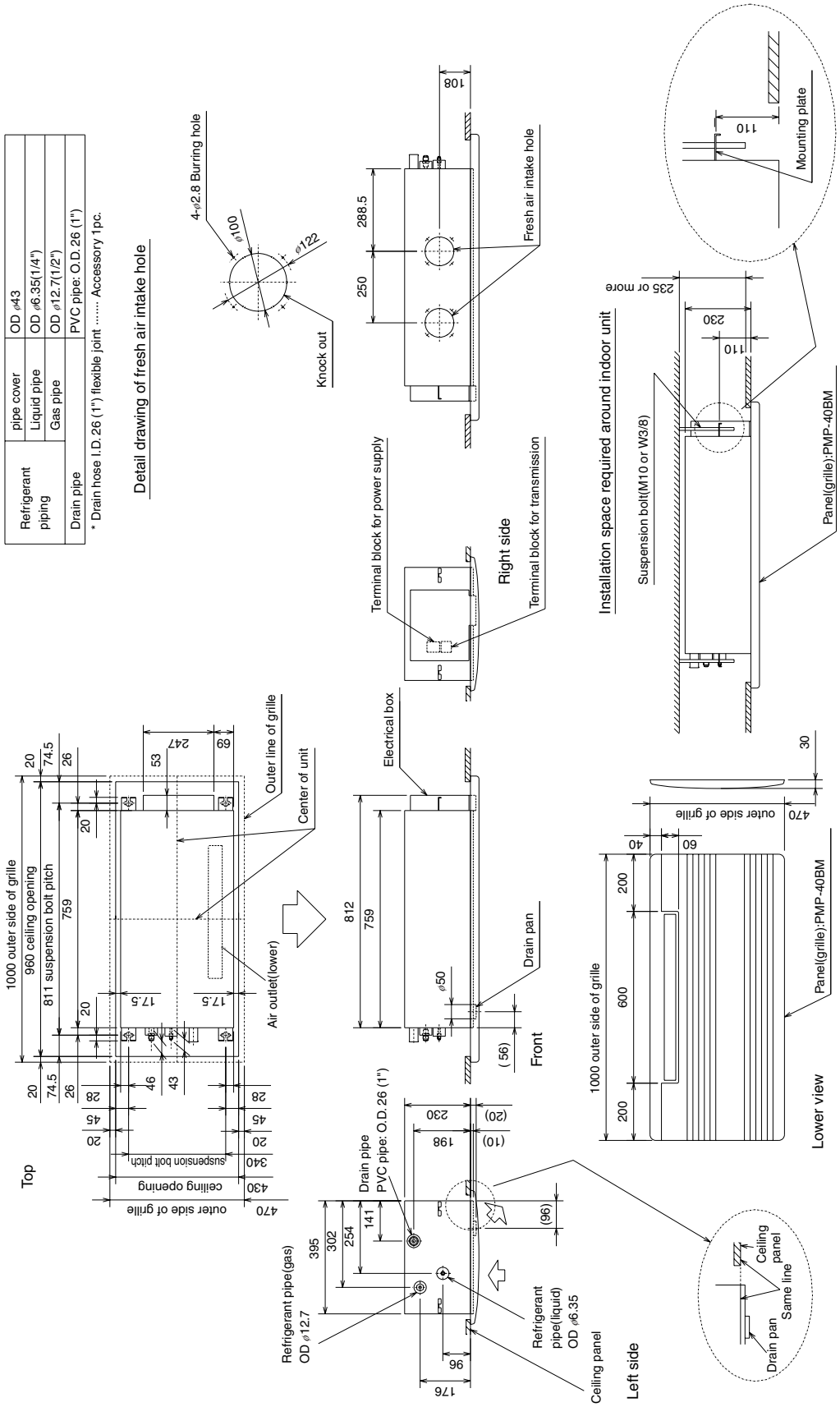

3. CENTER OF GRAVITY

PMFY-P20,25,32,40VBM-E

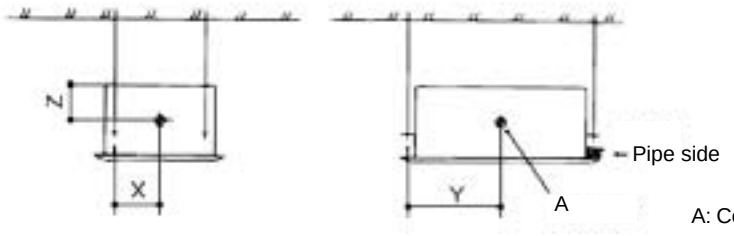

A: Center of gravity

(mm)[in]

Model name	X	Y	Z
PMFY-P20VBM-E	165 [6-1/2]	390 [15-3/8]	130 [5-1/8]
PMFY-P25VBM-E	165 [6-1/2]	390 [15-3/8]	130 [5-1/8]
PMFY-P32VBM-E	165 [6-1/2]	390 [15-3/8]	130 [5-1/8]
PMFY-P40VBM-E	165 [6-1/2]	390 [15-3/8]	130 [5-1/8]

PMFY-P20,25,32,40VBM-E

Drw. : IU-RG79-A671

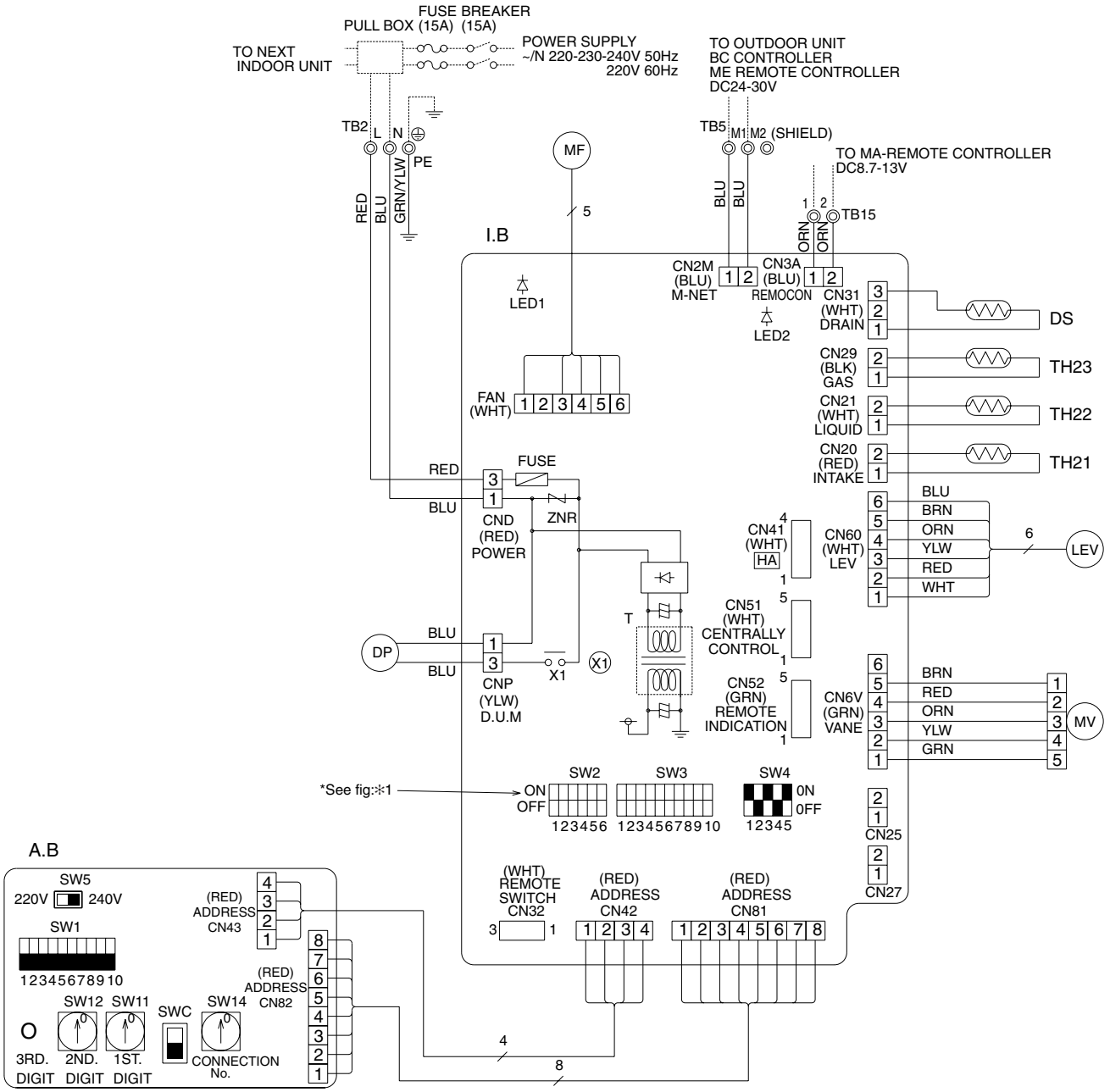

<SYMBOL EXPLANATION>

SYMBOL	NAME		SYMBOL	NAME	
I.B	INDOOR CONTROLLER BOARD		MF	FAN MOTOR	
CN25	CONNECTOR	HUMIDIFIER	MV	VANE MOTOR	
CN27		DAMPER	DP	DRAIN WATER LIFTING-UP MACH.	
CN32		REMOTE SWITCH	DS	DRAIN SENSOR	
CN41		HA TERMINAL-A	TB2	TERMINAL BLOCK	POWER SUPPLY
CN51		CENTRALLY CONTROL	TB5		TRANSMISSION
CN52		REMOTE INDICATION	TB15		MA-REMOTE CONTROLLER
SW2	SWITCH	CAPACITY CODE	TH21	THERMISTOR	ROOM TEMPERATURE DETECTION (0˚C/15kΩ, 25˚C/5.4kΩ)
SW3		MODE SELECTION			
SW4		MODEL SELECTION	TH22		PIPE TEMPERATURE DETECTION/LIQUID (0˚C/15kΩ, 25˚C/5.4kΩ)
ZNR	VARISTOR				
FUSE	FUSE(6.3A/250V)		TH23		PIPE TEMPERATURE DETECTION/GAS (0˚C/15kΩ, 25˚C/5.4kΩ)
X1	AUX.RELAY	DRAIN PUMP			
T	TRANSFORMER		LEV	LINEAR EXPANSION VALVE	
LED1	POWER SUPPLY(I.B)				
LED2	POWER SUPPLY(I.B)				
A.B	CIRCUIT BOARD				
SW1	SWITCH	MODE SELECTION			
SW5		VOLTAGE SELECTION			
SW11		ADDRESS SETTING 1ST DIGIT			
SW12		ADDRESS SETTING 2ND DIGIT			
SW14		CONNECTION NO.			

<*1>

MODELS	SW2	SW3
P20	0N 0FF 123456	0N 0FF 12345678910
P25	0N 0FF 123456	0N 0FF 12345678910
P32	0N 0FF 123456	0N 0FF 12345678910
P40	0N 0FF 123456	0N 0FF 12345678910

NOTES:
1. At servicing for outdoor unit, always follow the wiring diagram of outdoor unit.
2. Symbol [S] of TB5 is the shield wire connection.
3. Symbols used in wiring diagram above are, ◎:terminal block, □□□:connector.
4. The setting of the SW2 dip switches differs in the capacity for the detail, see the table <*1>.
5. Please set the switch SW5 according to the power supply voltage. Set SW5 to 240V side when the power supply is 230 and 240 volts. When the power supply is 220 volts, set SW5 to 220V side.

5. SOUND LEVELS

5-1. Sound levels

PMFY-P-VBM-E

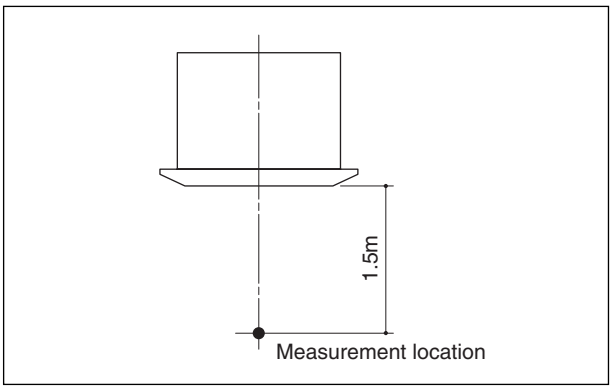

Sound level at anechoic room : Low-Middle2-Middle1-High

	Sound level dB (A)
PMFY-P20VBM-E	27-30-33-35
PMFY-P25VBM-E PMFY-P32VBM-E	32-34-36-37
PMFY-P40VBM-E	33-35-37-39

* Measured in anechoic room.

PMFY

5-2. NC curves

PMFY-P20VBM-E
External static pressure : 0Pa
Power source : 220,230,240V, 50Hz / 220V, 60Hz

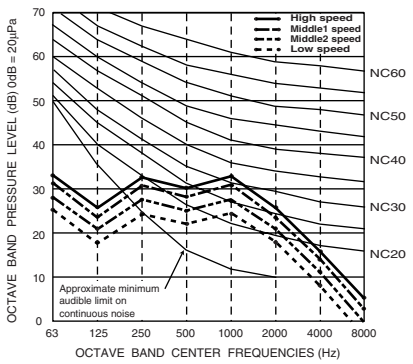

PMFY-P25,32VBM-E
External static pressure : 0Pa
Power source : 220,230,240V, 50Hz / 220V, 60Hz

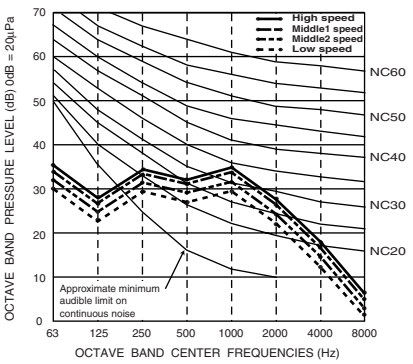

PMFY-P40VBM-E
External static pressure : 0Pa
Power source : 220,230,240V, 50Hz / 220V, 60Hz

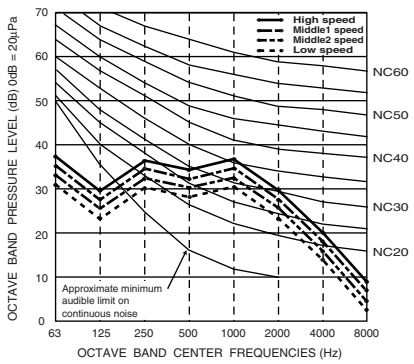

6. TEMPERATURE/AIRFLOW DISTRIBUTIONS

6-1. Temperature distributions

PMFY-P20-40VBM-E

<Cooling mode>
Flow angle 30˚

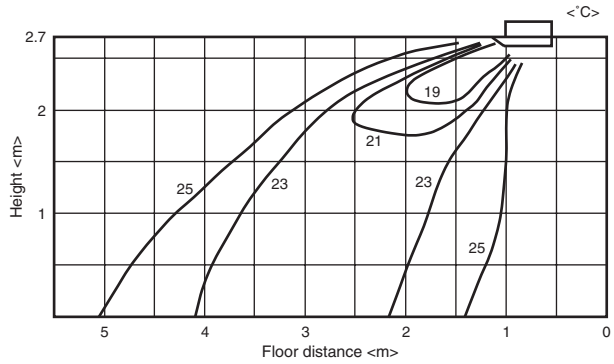

<Heating mode>
Flow angle 70˚

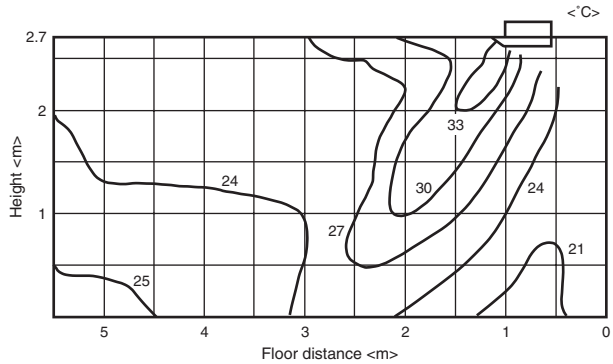

Note : These figures show typical temperature distributions in the conditions above. In the actual installation, they may differ from these figures under the influence of air temperature conditions, ceiling height, cooling/heating load,obstacles,etc.

6-2. Airflow distributions

PMFY-P20-40VBM-E

<Fan mode>
Flow angle 30˚

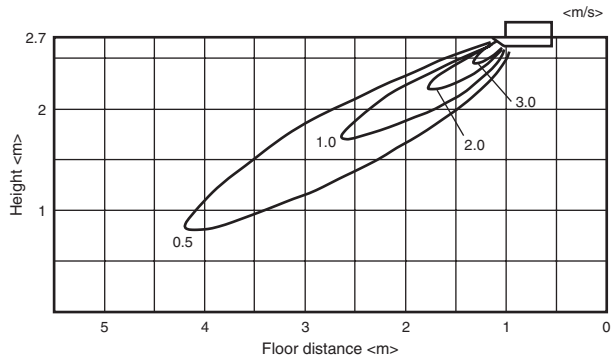

<Fan mode>
Flow angle 70˚

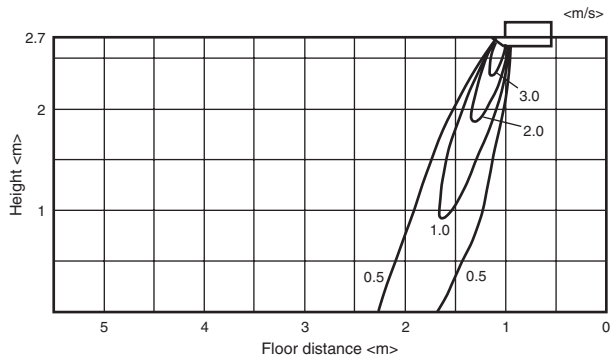

Note : These figures show typical airflow distributions in the conditions above. In the actual installation, they may differ from these figures under the influence of air temperature conditions, ceiling height, cooling/heating load,obstacles,etc.

PMFY

PLFY-P-VLMD-E

1. SPECIFICATIONS 1 - 106

2. EXTERNAL DIMENSIONS 1 - 108

3. CENTER OF GRAVITY 1 - 111

4. ELECTRICAL WIRING DIAGRAMS 1 - 112

5. SOUND LEVELS
   5-1. Sound levels 1 - 114
   5-2. NC curves 1 - 114
   5-3. OA Intake-static pressure curves 1 - 116
   5-4. Branch duct Discharge-static pressure curves 1 - 116

6. TEMPERATURE/AIRFLOW DISTRIBUTIONS
   6-1. Temperature distributions 1 - 117
   6-2. Airflow distributions 1 - 117

7. Optional parts for PLFY-P-VLMD-E 1 - 118

1. SPECIFICATIONS

Model			PLFY-P20VLMD-E	PLFY-P25VLMD-E	PLFY-P32VLMD-E	PLFY-P40VLMD-E
Power source			1-phase 220-240V 50Hz, 1-phase 220-230V 60Hz			
Cooling capacity (Nominal)	✻1	kW	2.2	2.8	3.6	4.5
	✻1	kcal / h	1,900	2,400	3,100	3,900
	✻1	Btu / h	7,500	9,600	12,300	15,400
	✻2	kcal / h	2,000	2,500	3,150	4,000
✻4	Power input	kW	0.072 / 0.075	0.072 / 0.075	0.072 / 0.075	0.081 / 0.085
✻4	Current input	A	0.36 / 0.37	0.36 / 0.37	0.36 / 0.37	0.40 / 0.42
Heating capacity (Nominal)	✻3	kW	2.5	3.2	4.0	5.0
	✻3	kcal / h	2,200	2,800	3,400	4,300
	✻3	Btu / h	8,500	10,900	13,600	17,100
✻4	Power input	kW	0.065 / 0.069	0.065 / 0.069	0.065 / 0.069	0.074 / 0.079
✻4	Current input	A	0.30 / 0.32	0.30 / 0.32	0.30 / 0.32	0.34 / 0.37
External finish			Unit : Galvanized			
External dimension H x W x D		mm	290 x 776 x 634		290 x 776 x 634	
		in.	11-7/16 x 30-9/16 x 25		11-7/16 x 30-9/16 x 25	
Net weight		kg (lb)	23 (51)	23 (51)	24 (53)	24 (53)
Decoration panel	Model		**CMP-40VLW-C**	**CMP-40VLW-C**	**CMP-40VLW-C**	**CMP-40VLW-C**
	External finish		ABS, MUNSELL (6.4Y 8.9/0.4), include Service Panel : Galvanized, MUNSELL (6.4Y 8.9/0.4)			
	Dimension H x W x D	mm	20 x 1,080 x 710			
		in.	13/16 x 30-9/16 x 28			
	Net Weight	kg (lb)	6.5 (15)			
Heat exchanger			Cross fin			
FAN	Type x Quantity		Turbo fan x 1	Turbo fan x 1	Turbo fan x 1	Turbo fan x 1
	External static press.	Pa	0	0	0	0
		mmH_2O	0	0	0	0
	Motor type		1-phase induction motor			
	Motor output	kW	0.015 (at 240V)	0.015 (at 240V)	0.015 (at 240V)	0.015 (at 240V)
	Driving mechanism		Direct-driven by motor			
	Airflow rate (Low-Mid-High)	m^3 / min	6.5 - 8.0 - 9.5	6.5 - 8.0 - 9.5	6.5 - 8.0 - 9.5	7.0 - 8.5 - 10.5
		L / s	108 - 133 - 158	108 - 133 - 158	108 - 133 - 158	117 - 142 - 175
		cfm	230 - 283 - 335	230 - 283 - 335	230 - 283 - 335	247 - 300 - 371
Sound pressure level (Low-Mid-High)		dB <A>	27 - 30 - 33 (220, 240V)	27 - 30 - 33 (220,240V)	27 - 30 - 33 (220,240V)	29 - 33 - 36 (220,240V)
(measured in anechoic room)	✻4	dB <A>	28 - 31 - 34 (230V)	28 - 31 - 34 (230V)	28 - 31 - 34 (230V)	30 - 34 - 37 (230V)
Insulation material			Polystyrene foam, Polyethylene foam, Urethane foam			
Air filter			PP honeycomb fabric (long life filter)			
Protection device			Fuse			
Refrigerant control device			LEV			
Connectable outdoor unit			R410A CITY MULTI			
Diameter of refrigerant pipe	Liquid (R410A)	mm (in.)	ø6.35 (ø1/4) Flare	ø6.35 (ø1/4) Flare	ø6.35 (ø1/4) Flare	ø6.35 (ø1/4) Flare
	Gas (R410A)	mm (in.)	ø12.7 (ø1/2) Flare	ø12.7 (ø1/2) Flare	ø12.7 (ø1/2) Flare	ø12.7 (ø1/2) Flare
Field drain pipe size		mm (in.)	O.D. 32mm (1-1/4)			
Drawing	External		IU-W275-920			
	Wiring		IU-W653-952			
	Refrigerant cycle		-			
Standard attachment	Document		Installation Manual, Instruction Book			
	Accessory		Drain hose I.D. 32mm (1-1/4) (flexible joint)			
Remark	Optional parts					
	Decoration panel		CMP-40VLW-C	CMP-40VLW-C	CMP-40VLW-C	CMP-40VLW-C
	OA duct flange		PAC-KH11OF	PAC-KH11OF	PAC-KH11OF	PAC-KH11OF
	Installation		Details on foundation work, duct work, insulation work, electrical wiring, power source switch, and other items shall be referred to the Installation Manual.			

Note :

	✻1 Nominal cooling conditions	✻2 Nominal cooling conditions	✻3 Nominal heating conditions
Indoor :	27˚CDB/19˚CWB (81˚FDB/66˚FWB)	27˚CDB/19.5˚CWB (81˚FDB/67˚FWB)	20˚CDB (68˚FDB)
Outdoor :	35˚CDB (95˚FDB)	35˚CDB (95˚FDB)	7˚CDB/6˚CWB (45˚FDB/43˚FWB)
Pipe length :	7.5 m (24-9/16 ft)	5 m (16-3/8 ft)	7.5 m (24-9/16 ft)
Level difference :	0 m (0 ft)	0 m (0 ft)	0 m (0 ft)

* Nominal conditions ✻1, ✻3 are subject to JIS B8615-1.
* Due to continuing improvement, above specification may be subject to change without notice.

✻4 The values are measured at the rated external static pressure.

Unit converter

kcal/h = kW x 860
Btu/h = kW x 3,412
cfm = m^3/min x 35.31
lb = kg / 0.4536

*Above specification data is subject to rounding variation.

Ref.: Spec_PLFY-P20VLMD-E_1

1. SPECIFICATIONS

Model			PLFY-P50VLMD-E	PLFY-P63VLMD-E	PLFY-P80VLMD-E	PLFY-P100VLMD-E	PLFY-P125VLMD-E
Power source			1-phase 220-240V 50Hz, 1-phase 220-230V 60Hz				
Cooling capacity (Nominal)	※1	kW	5.6	7.1	9.0	11.2	14.0
	※1	kcal / h	4,800	6,100	7,700	9,600	12,000
	※1	Btu / h	19,100	24,200	30,700	38,200	47,800
	※2	kcal / h	5,000	6,300	8,000	10,000	12,500
※4	Power input	kW	0.082 / 0.086	0.101 / 0.105	0.147 / 0.156	0.157 / 0.186	0.28 / 0.28
※4	Current input	A	0.41 / 0.43	0.49 / 0.51	0.72 / 0.74	0.75 / 0.88	1.35 / 1.35
Heating capacity (Nominal)	※3	kW	6.3	8.0	10.0	12.5	16.0
	※3	kcal / h	5,400	6,900	8,600	10,800	13,800
	※3	Btu / h	21,500	27,300	34,100	42,700	54,600
※4	Power input	kW	0.075 / 0.080	0.094 / 0.099	0.140 / 0.150	0.150 / 0.180	0.27 / 0.27
※4	Current input	A	0.35 / 0.38	0.43 / 0.46	0.66 / 0.69	0.69 / 0.83	1.33 / 1.33
External finish			Unit : Galvanized				
External dimension H x W x D		mm	290 x 946 x 634		290 x 1,446 x 634		290 x 1,708 x 606
		in.	11-7/16 x 37-1/4 x 25		11-7/16 x 56-15/16 x 25		11-7/16 x 67-1/4 x 23-7/8
Net weight		kg (lb)	27 (60)	28 (62)	44 (98)	47 (104)	56 (124)
Decoration panel	Model		**CMP-63VLW-C**	**CMP-63VLW-C**	**CMP-100VLW-C**	**CMP-100VLW-C**	**CMP-125VLW-C**
	External finish		ABS, MUNSELL (6.4Y 8.9/0.4), include Service Panel : Galvanized, MUNSELL (6.4Y 8.9/0.4)				
	Dimension H x W x D	mm	20 x 1,250 x 710		20 x 1,750 x 710		20 x 2,010 x 710
		in.	13/16 x49-1/4 x 28		13/16 x 56-15/16 x 28		13/16 x 67-1/4 x 28
	Net Weight	kg (lb)	7.5 (17)		12.5 (28)		13.0 (29)
Heat exchanger			Cross fin				
FAN	Type x Quantity		Turbo fan x 1	Turbo fan x 1	Turbo fan x 2	Turbo fan x 2	Sirocco fan x 4
	External static press.	Pa	0	0	0	0	0
		mmH_2O	0	0	0	0	0
	Motor type		1-phase induction motor				
	Motor output	kW	0.020 (at 240V)	0.020 (at 240V)	0.020 (at 240V)	0.030 (at 240V)	0.078 x 2 (at 240V)
	Driving mechanism		Direct-driven by motor				
	Airflow rate (Low-Mid-High)	m^3 / min	9.0 - 11.0 - 12.5	10.0 - 13.0 - 15.5	15.5 - 18.5 - 22.0	17.5 - 21.0 - 25.0	24.0 - 27.0 - 30.0 - 33.0
		L / s	150 - 183 - 208	167 - 217 - 258	258 - 308 - 367	292 - 350 - 417	400 - 450 - 500 - 550
		cfm	318 - 388 - 441	353 - 459 - 547	547 - 653 - 777	618 - 742 - 883	848 - 953 - 1,059 - 1,165
Sound pressure level (Low-Mid-High)		dB <A>	31 - 34 - 37 (220, 240V)	32 - 37 - 39 (220, 240V)	33 - 36 - 39 (220, 240V)	36 - 39 - 42 (220, 240V)	40 - 42 - 44 - 46 (220, 240V)
(measured in anechoic room)	※4	dB <A>	32 - 35 - 38 (230V)	33 - 38 - 40 (230V)	34 - 37 - 40 (230V)	37 - 41 - 43 (230V)	40 - 42 - 44 - 46 (230V)
Insulation material			Polystyrene foam, Polyethylene foam, Urethane foam				
Air filter			PP honeycomb fabric (long life filter)				Synthetic fiber unwoven cloth filter (long life)
Protection device			Fuse				
Refrigerant control device			LEV				
Connectable outdoor unit			R410A CITY MULTI				
Diameter of refrigerant pipe	Liquid (R410A)	mm (in.)	ø6.35 (ø1/4) Flare	ø9.52 (ø3/8) Flare	ø9.52 (ø3/8) Flare	ø9.52 (ø3/8) Flare	ø9.52 (ø3/8) Flare
	Gas (R410A)	mm (in.)	ø12.7 (ø1/2) Flare	ø15.88 (ø5/8) Flare	ø15.88 (ø5/8) Flare	ø15.88 (ø5/8) Flare	ø15.88 (ø5/8) Flare
Field drain pipe size		mm (in.)	O.D. 32mm (1-1/4)				
Drawing	External		IU-W275-920	IU-W275-920	IU-W275-920	IU-W275-920	IU-W275-921
	Wiring		IU-W653-952	IU-W653-952	IU-W653-952	IU-W653-952	IU-W275-927
	Refrigerant cycle		-	-	-	-	-
Standard attachment	Document		Installation Manual, Instruction Book				
	Accessory		Drain hose I.D. 32mm (1-1/4) (flexible joint)				
Remark	Optional parts						
	Decoration panel		CMP-63VLW-C	CMP-63VLW-C	CMP-100VLW-C	CMP-100VLW-C	CMP-125VLW-C
	OA duct flange		PAC-KH11OF	PAC-KH11OF	PAC-KH11OF	PAC-KH11OF	PAC-KH11OF
	Installation		Details on foundation work, duct work, insulation work, electrical wiring, power source switch, and other items shall be referred to the Installation Manual.				

Note :

	※1 Nominal cooling conditions	※2 Nominal cooling conditions	※3 Nominal heating conditions
Indoor :	27˚CDB/19˚CWB (81˚FDB/66˚FWB)	27˚CDB/19.5˚CWB (81˚FDB/67˚FWB)	20˚CDB (68˚FDB)
Outdoor :	35˚CDB (95˚FDB)	35˚CDB (95˚FDB)	7˚CDB/6˚CWB (45˚FDB/43˚FWB)
Pipe length :	7.5 m (24-9/16 ft)	5 m (16-3/8 ft)	7.5 m (24-9/16 ft)
Level difference :	0 m (0 ft)	0 m (0 ft)	0 m (0 ft)

* Nominal conditions ※1, ※3 are subject to JIS B8615-1.
* Due to continuing improvement, above specification may be subject to change without notice.

※4 The values are measured at the rated external static pressure.

Unit converter

kcal/h = kW x 860
Btu/h = kW x 3,412
cfm = m^3/min x 35.31
lb = kg / 0.4536

*Above specification data is subject to rounding variation.

Ref.: Spec_PLFY-P20VLMD-E_2

PLFY

PLFY

PLFY-P20,25,32,40,50,63,80,100VLMD-E

Drw. : IU-W275-920
Unit : mm

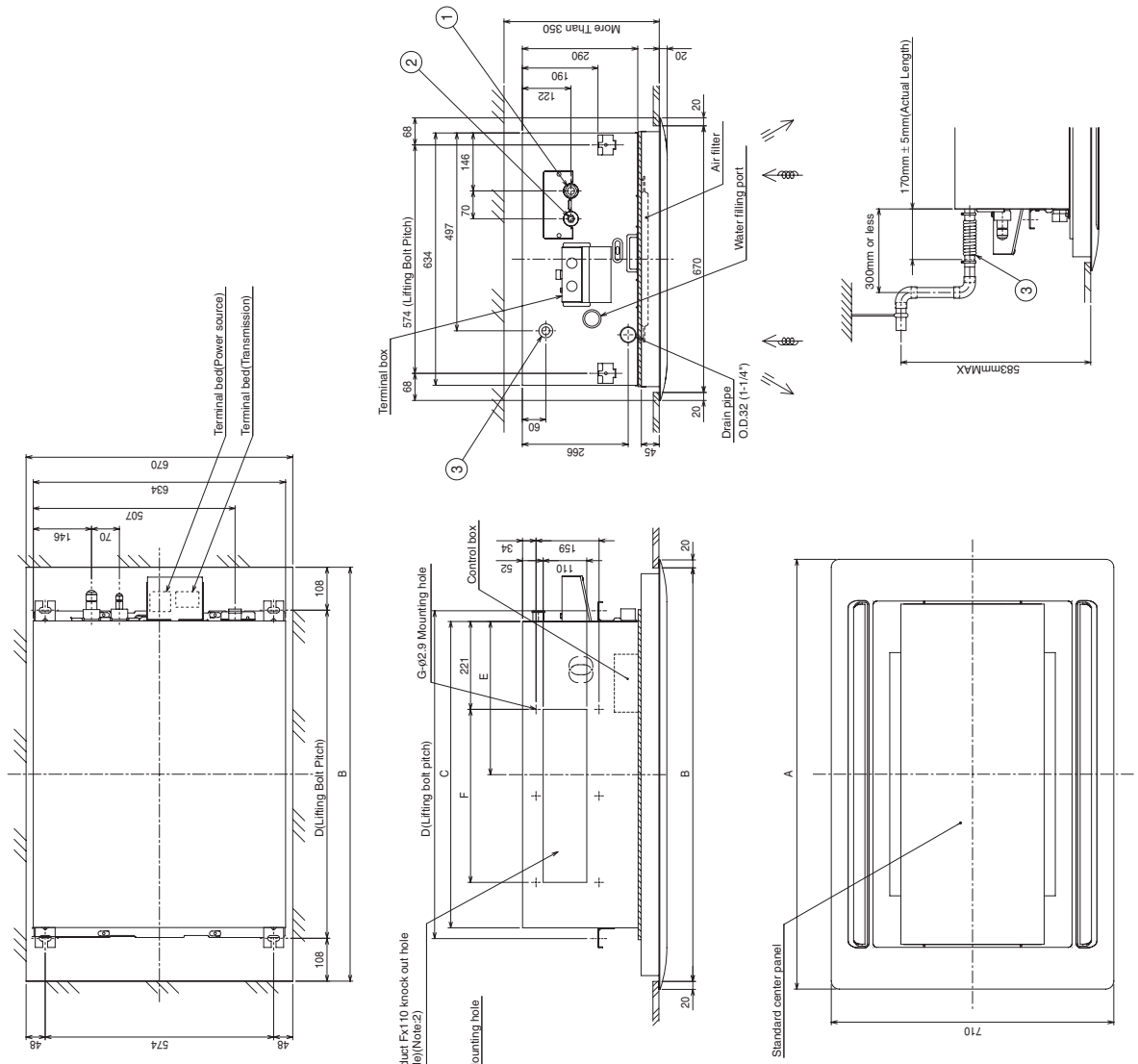

Note: 1. Use M10 screw for the lifting bolt (field supply).
2. It is available to connect the branch duct on right and left side both.

		<flare>	
Model 20·25·32·40	Gas pipe	ø12.7	..... ①
	Liquid pipe	ø6.35	..... ②
Model 50	Gas pipe	ø12.7	..... ①
	Liquid pipe	ø6.35	..... ②
Model 63·80	Gas pipe	ø15.88	..... ①
	Liquid pipe	ø9.52	..... ②
Model 100	Gas pipe	ø15.88	..... ①
	Liquid pipe	ø9.52	..... ②
Drain hose	I.D. 32 (1-1/4") <flexible joint> (accessory)		..... ③

Model	A	B	C	D	E	F	G	H(Liquid)	H(Gas)
PLFY-P20VLMD-E PLFY-P25VLMD-E PLFY-P32VLMD-E PLFY-P40VLMD-E	CMP-40VLW-B	1080	1040	776	824	388	217.5X2 =435	6	17	27
PLFY-P50VLMD-E PLFY-P63VLMD-E	CMP-63VLW-B	1250	1210	946	994	473			22	29
PLFY-P80VLMD-E	CMP-100VLW-B	1750	1710	1446	1494	723	188.5X4 =754	10	22	36
PLFY-P100VLMD-E										

PLFY-P20,25,32,40,50,63,80,100VLMD-E with OA duct flange

Drw. : IU-W275-920-1
Unit : mm

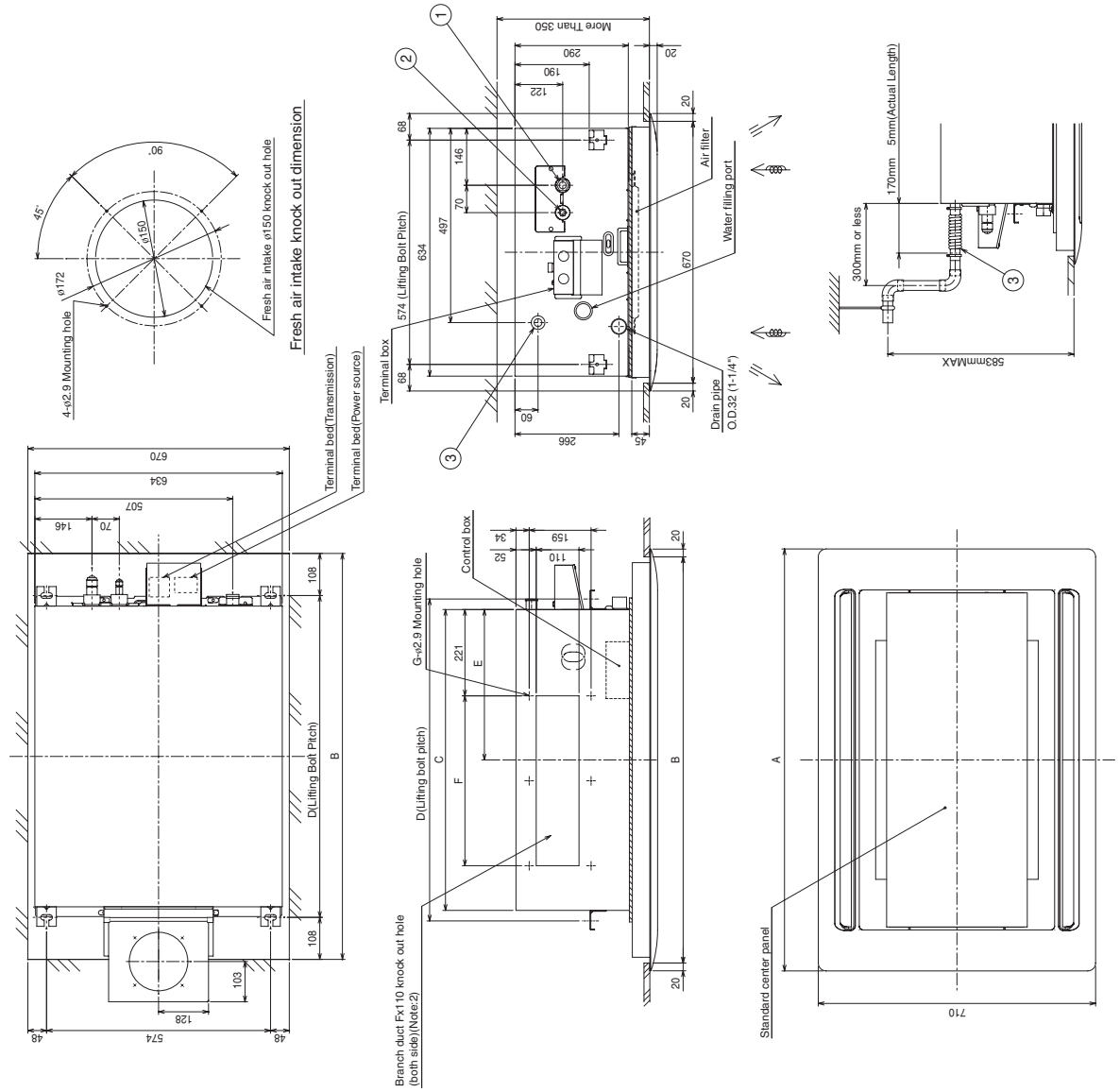

Note: 1.Use M10 screw for the lifting bolt (field supply).
2.It is available to connect the branch duct on right and left side both.

			<flare>	
Model 20-25-32-40	Gas pipe	ø12.7	.....	①
	Liquid pipe	ø6.35	.....	②
Model 50	Gas pipe	ø12.7	.....	①
	Liquid pipe	ø6.35	.....	②
Model 63-80	Gas pipe	ø15.88	.....	①
	Liquid pipe	ø9.52	.....	②
Model 100	Gas pipe	ø15.88	.....	①
	Liquid pipe	ø9.52	.....	②
Drain hose	I.D. 32 (1-1/4") <flexible joint> (accessory)		.....	③

Model	A	B	C	D	E	F	G
PLFY-P20VLMD-E	1080	1040	776	824	388	217.5X2 =435	6
PLFY-P25VLMD-E							
PLFY-P32VLMD-E							
PLFY-P40VLMD-E							
PLFY-P50VLMD-E	1250	1210	946	994	473		
PLFY-P63VLMD-E							
PLFY-P80VLMD-E	1750	1710	1446	1494	723	188.5X4 =754	10
PLFY-P100VLMD-E							

PLFY-P125VLMD-E

Drw. : IU-W275-921
Unit : mm

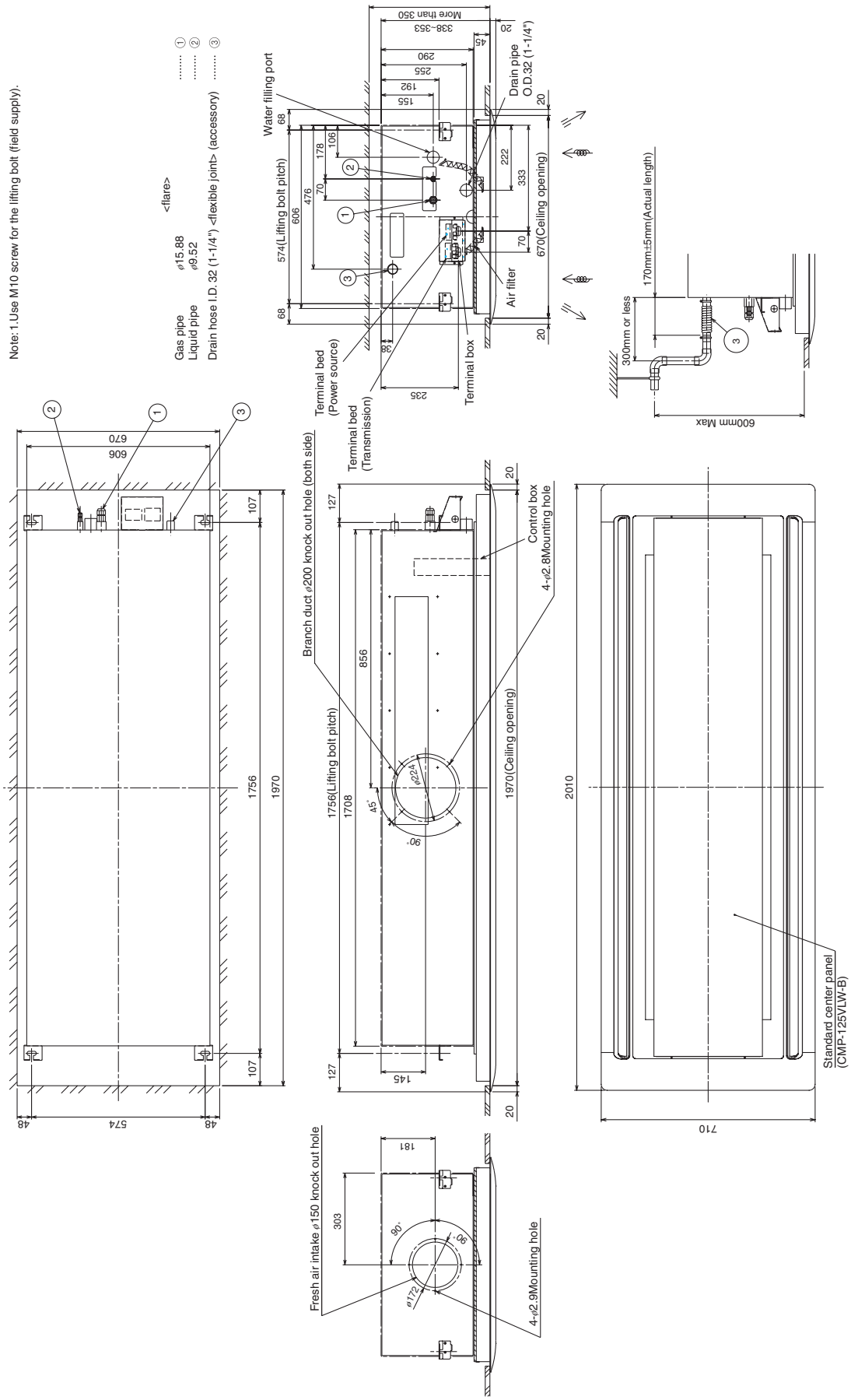

PLFY-P20,25,32,40,50,63,80,100,125VLMD-E

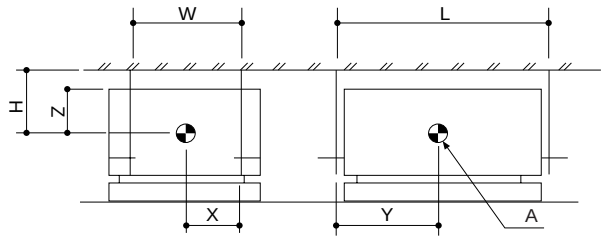

A: Center of gravity

(mm)[in]

Model name	W	L	H	X	Y	Z
PLFY-P20VLMD-E	574 [22-5/8]	824 [32-15/32]	172 [6-25/32]	287 [11-5/16]	370 [14-19/32]	160 [6-5/16]
PLFY-P25VLMD-E	574 [22-5/8]	824 [32-15/32]	172 [6-25/32]	287 [11-5/16]	370 [14-19/32]	160 [6-5/16]
PLFY-P32VLMD-E	574 [22-5/8]	824 [32-15/32]	172 [6-25/32]	287 [11-5/16]	370 [14-19/32]	160 [6-5/16]
PLFY-P40VLMD-E	574 [22-5/8]	824 [32-15/32]	172 [6-25/32]	287 [11-5/16]	370 [14-19/32]	160 [6-5/16]
PLFY-P50VLMD-E	574 [22-5/8]	994 [32-5/32]	172 [6-25/32]	287 [11-5/16]	445 [17-17/32]	160 [6-5/16]
PLFY-P63VLMD-E	574 [22-5/8]	994 [32-5/32]	172 [6-25/32]	287 [11-5/16]	445 [17-17/32]	160 [6-5/16]
PLFY-P80VLMD-E	574 [22-5/8]	1494 [58-27/32]	172 [6-25/32]	287 [11-5/16]	655 [25-13/16]	160 [6-5/16]
PLFY-P100VLMD-E	574 [22-5/8]	1494 [58-27/32]	172 [6-25/32]	287 [11-5/16]	655 [25-13/16]	160 [6-5/16]
PLFY-P125VLMD-E	574 [22-5/8]	1756 [69-5/32]	203 [8]	287 [11-5/16]	758 [29-27/32]	181 [7-5/32]

PLFY

PLFY-P20,25,32,40,50,63,80,100VLMD-E

Drw. : IU-W653-952

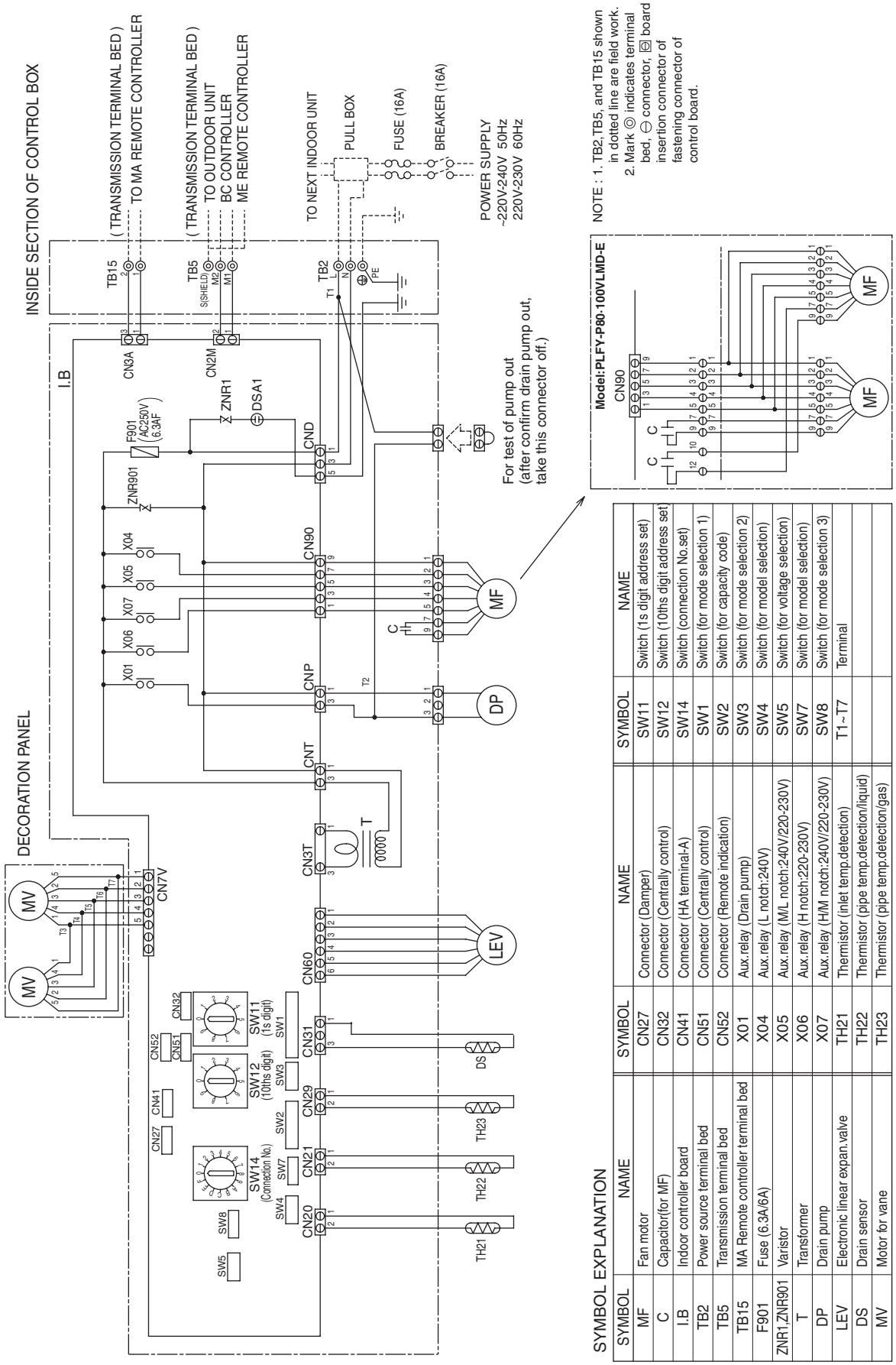

SYMBOL EXPLANATION

SYMBOL	NAME	SYMBOL	NAME	SYMBOL	NAME
MF	Fan motor	CN27	Connector (Damper)	SW11	Switch (1s digit address set)
C	Capacitor(for MF)	CN32	Connector (Centrally control)	SW12	Switch (10ths digit address set)
I.B	Indoor controller board	CN41	Connector (HA terminal-A)	SW14	Switch (connection No.set)
TB2	Power source terminal bed	CN51	Connector (Centrally control)	SW1	Switch (for mode selection 1)
TB5	Transmission terminal bed	CN52	Connector (Remote indication)	SW2	Switch (for capacity code)
TB15	MA Remote controller terminal bed	X01	Aux.relay (Drain pump)	SW3	Switch (for mode selection 2)
F901	Fuse (6.3A/6A)	X04	Aux.relay (L notch:240V)	SW4	Switch (for model selection)
ZNR1,ZNR901	Varistor	X05	Aux.relay (M/L notch:240V/220-230V)	SW5	Switch (for voltage selection)
T	Transformer	X06	Aux.relay (H notch:220-230V)	SW7	Switch (for model selection)
DP	Drain pump	X07	Aux.relay (H/M notch:240V/220-230V)	SW8	Switch (for mode selection 3)
LEV	Electronic linear expan.valve	TH21	Thermistor (inlet temp.detection)	T1~T7	Terminal
DS	Drain sensor	TH22	Thermistor (pipe temp.detection/liquid)		
MV	Motor for vane	TH23	Thermistor (pipe temp.detection/gas)		

PLFY-125VLMD-E

Drw. : IU-W275-927

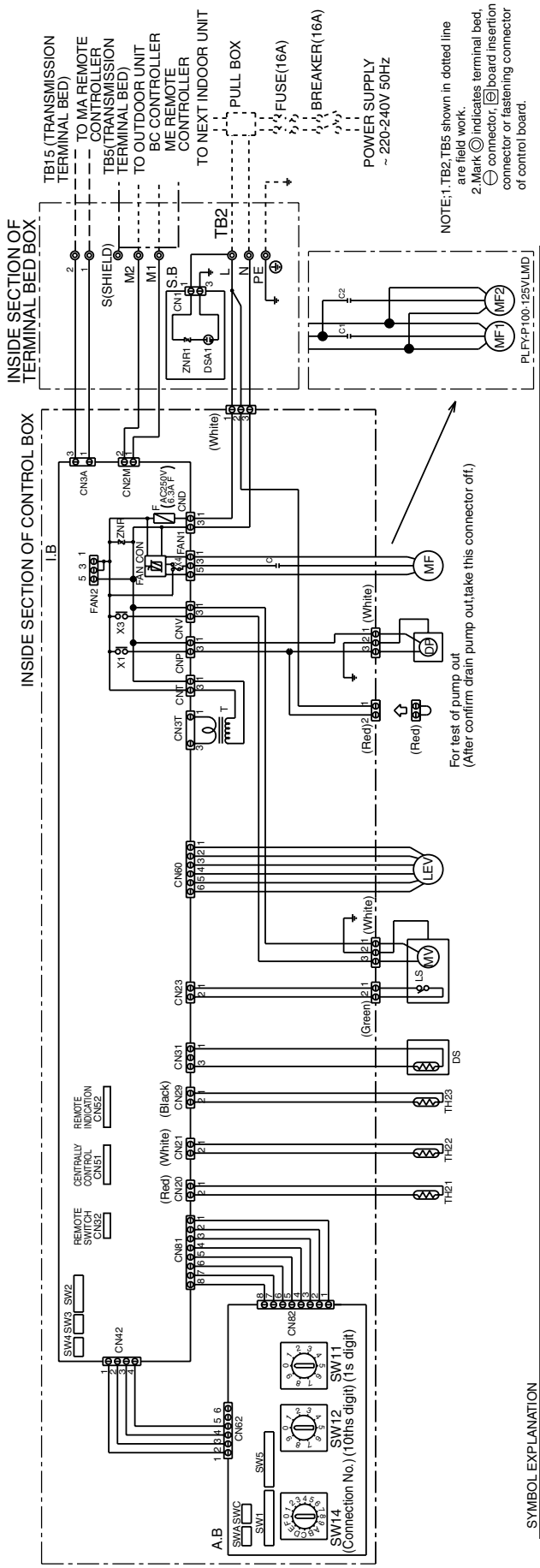

SYMBOL EXPLANATION

SYMBOL	NAME	SYMBOL	NAME	SYMBOL	NAME
MF,MF1,MF2	Fan motor	LEV	Electronic linear expan.valve	SW14(A.B)	Switch (connection No.set)
C,C1,C2	Capacitor(for MF,MF1,MF2)	S.B	Surge absorber board	SW1(A.B)	Switch (for mode selection)
I.B	Indoor controller board	LS	Limit switch (MV built in)	SW2(I.B)	Switch (for capacity code)
A.B	Address board	MV	Motor for vane (with limit switch)	SW3(I.B)	Switch (for mode selection)
TB2	Power source terminal bed	DS	Drain sensor	SW4(I.B)	Switch (for model selection)
TB5	Transmission terminal bed	TH21	Thermistor (inlet temp.detection)	SW5(A.B)	Switch (for voltage selection)
TB15	Transmission terminal bed	TH22	Thermistor (pipe temp.detection / liquid)	SWA(A.B)	Switch (option parts)
F	Fuse AC250V 6.3A F	TH23	Thermistor (pipe temp.detection / gas)	SWC(A.B)	Switch (option parts)
T	Transformer	SW11(A.B)	Switch (1s digit address set)	X1,X3,X4	Aux.relay
DP	Drain pump	SW12(A.B)	Switch (10ths digit address set)		

5. SOUND LEVELS

5-1. Sound levels

PLFY-P-VLMD-E

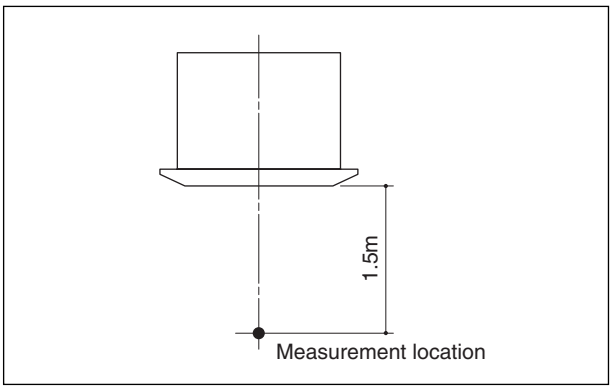

Sound level at anechoic room : Low-Mid-High

	Sound level dB (A)	
	220,240V	230V
PLFY-P20VLMD-E PLFY-P25VLMD-E PLFY-P32VLMD-E	27-30-33	28-31-34
PLFY-P40VLMD-E	29-33-36	30-34-37
PLFY-P50VLMD-E	31-34-37	32-35-38
PLFY-P63VLMD-E	32-37-39	33-38-40
PLFY-P80VLMD-E	33-36-39	34-37-40
PLFY-P100VLMD-E	36-39-42	37-41-43
PLFY-P125VLMD-E	40-42-44-46	

PLFY

5-2. NC curves

PLFY-P20,25VLMD-E
External static pressure : 0Pa
Power source : 220,240V, 50/60Hz

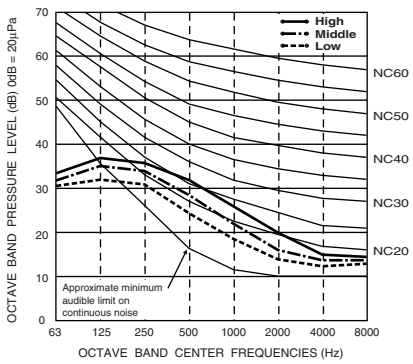

PLFY-P20,25VLMD-E
External static pressure : 0Pa
Power source : 230V, 50/60Hz

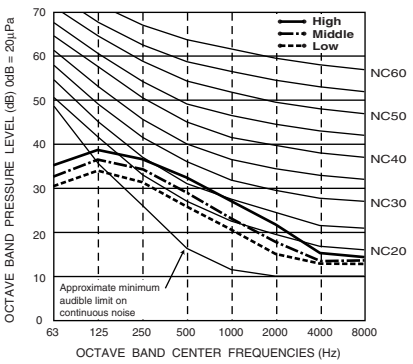

PLFY-P32VLMD-E
External static pressure : 0Pa
Power source : 220,240V, 50/60Hz

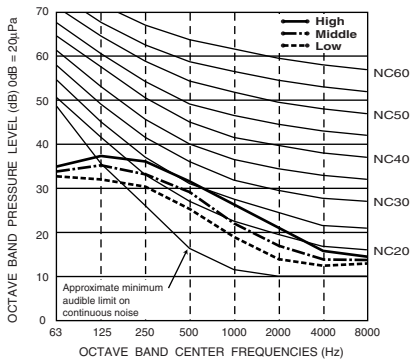

PLFY-P32VLMD-E
External static pressure : 0Pa
Power source : 230V, 50/60Hz

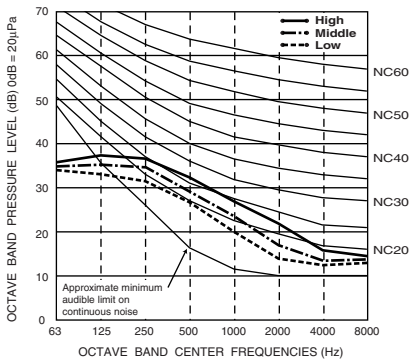

PLFY-P40VLMD-E
External static pressure : 0Pa
Power source : 220,240V, 50/60Hz

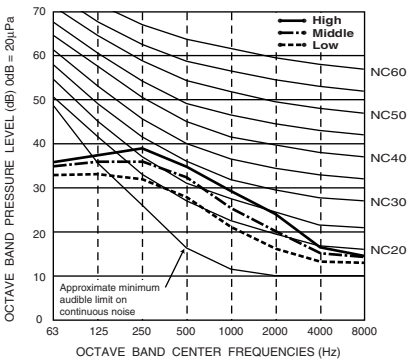

PLFY-P40VLMD-E
External static pressure : 0Pa
Power source : 230V, 50/60Hz

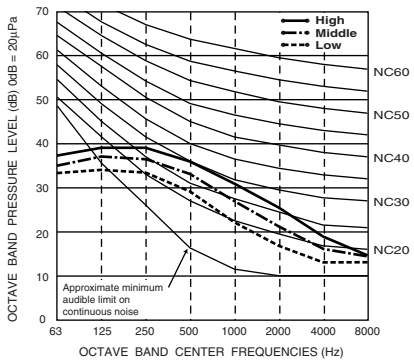

5. SOUND LEVELS

5-2. NC curves

PLFY-P50VLMD-E
External static pressure : 0Pa
Power source : 220,240V, 50/60Hz

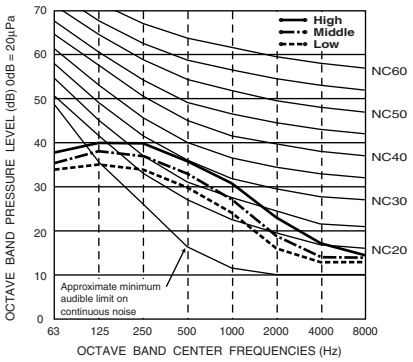

PLFY-P50VLMD-E
External static pressure : 0Pa
Power source : 230V, 50/60Hz

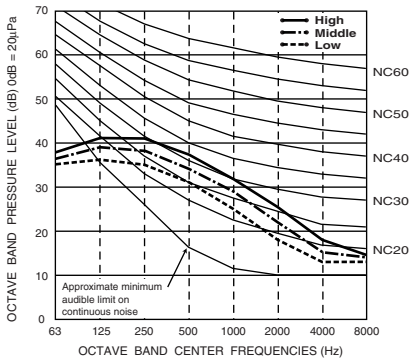

PLFY-P63VLMD-E
External static pressure : 0Pa
Power source : 220,240V, 50/60Hz

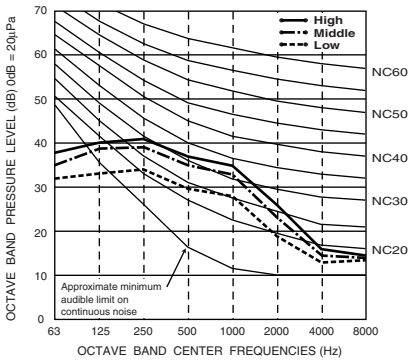

PLFY-P63VLMD-E
External static pressure : 0Pa
Power source : 230V, 50/60Hz

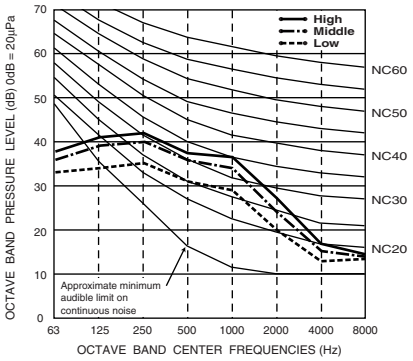

PLFY-P80VLMD-E
External static pressure : 0Pa
Power source : 220,240V, 50/60Hz

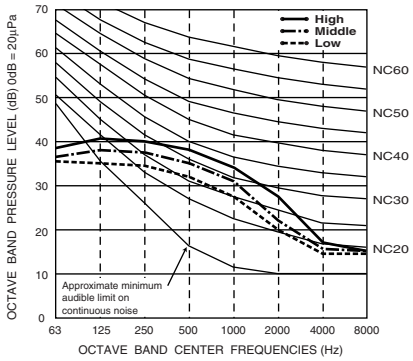

PLFY-P80VLMD-E
External static pressure : 0Pa
Power source : 230V, 50/60Hz

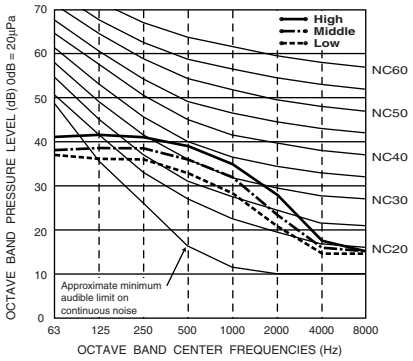

PLFY-P100VLMD-E
External static pressure : 0Pa
Power source : 220,240V, 50/60Hz

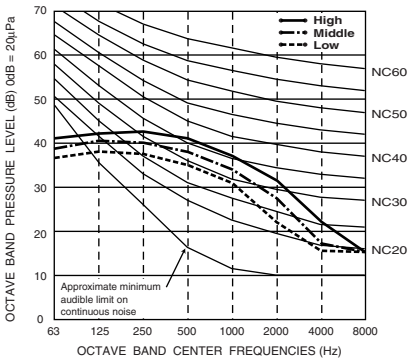

PLFY-P100VLMD-E
External static pressure : 0Pa
Power source : 230V, 50/60Hz

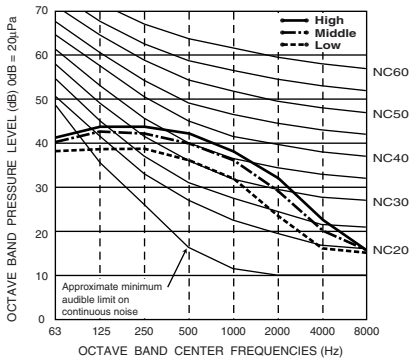

PLFY-P125VLMD-E
External static pressure : 0Pa
Power source : 220,240V, 50/60Hz

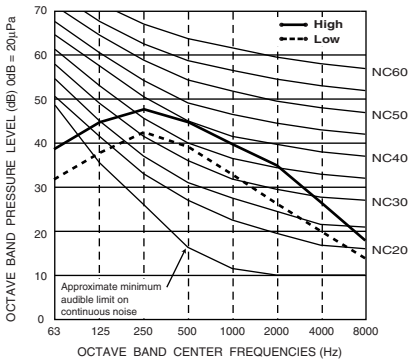

PLFY-P125VLMD-E
External static pressure : 0Pa
Power source : 230V, 50/60Hz

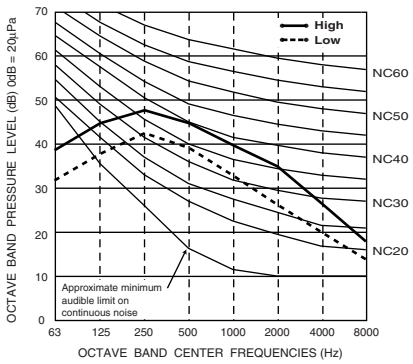

5-3. OA Intake-static pressure curves

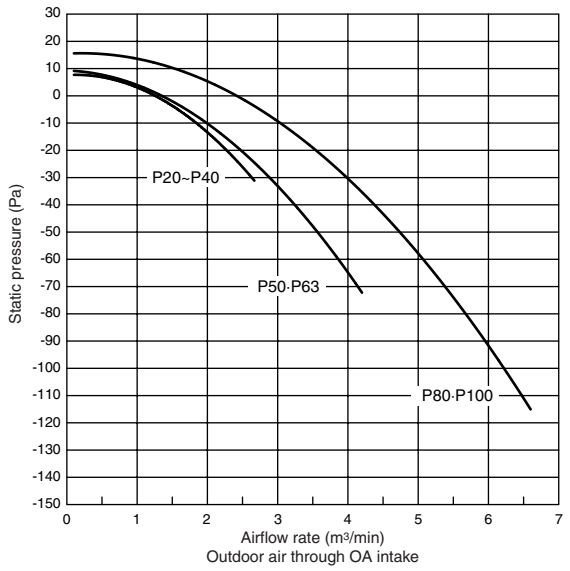

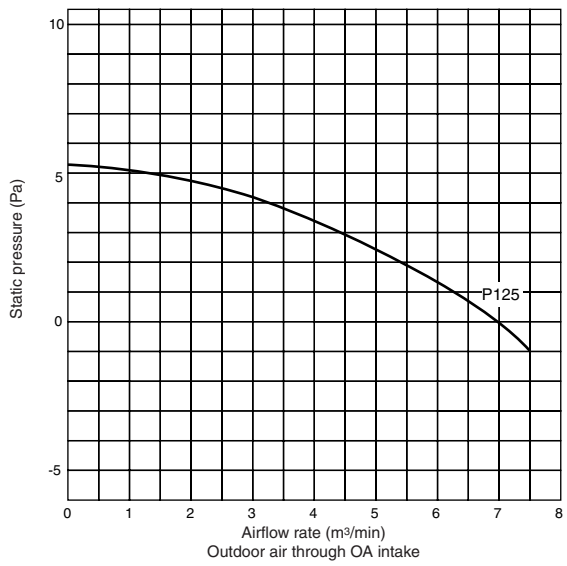

PLFY

Please confirm that inlet-air temperature (which is mixed with outdoor air) is in the following operating temperature range.

PLFY-P-VLMD-E : Operating temperature range

Mode	Temperature range of inlet air
Cooling	15˚C~24˚C(Wet bulb)
Dry	
Heating	15˚C~27˚C(Dry bulb)

*Relative humidity range is 30~80%.

5-4. Branch duct Discharge-static pressure curves

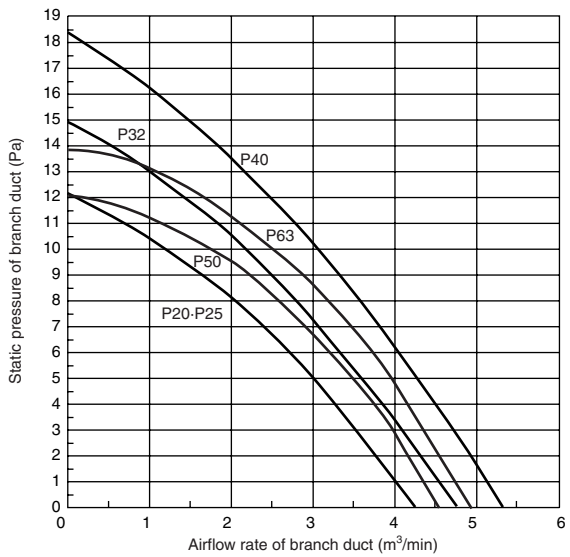

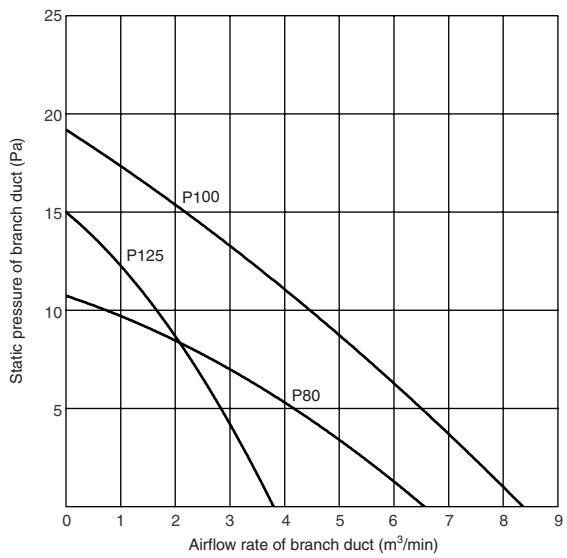

6. TEMPERATURE/AIRFLOW DISTRIBUTIONS

6-1. Temperature distributions

PLFY-P20-125VLMD-E

<Cooling mode>
Airflow angle : Horizontal
Room temp.: 27˚C
Airflow rate : High

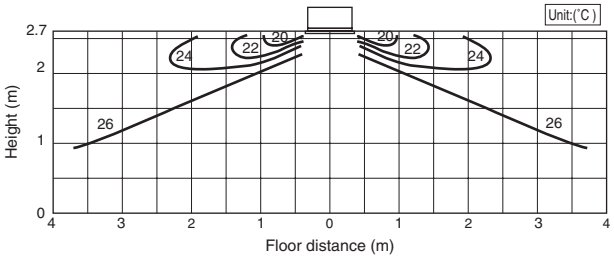

<Heating mode>
Airflow angle : Downward
Room temp.: 20˚C
Airflow rate : High

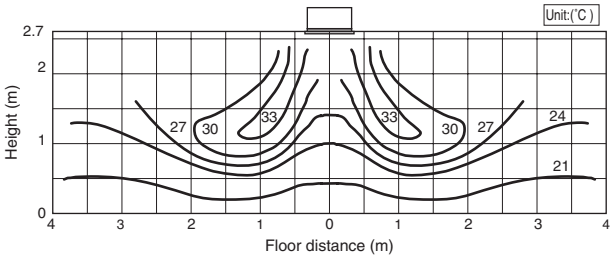

Note : These figures show typical temperature distributions in the conditions above. In the actual installation, they may differ from these figures under the influence of air temperature conditions, ceiling height, cooling/heating load,obstacles,etc.

6-2. Airflow distributions

PLFY-P20-125VLMD-E

<Cooling mode>
Airflow angle : Horizontal
Room temp.: 27˚C
Airflow rate : High

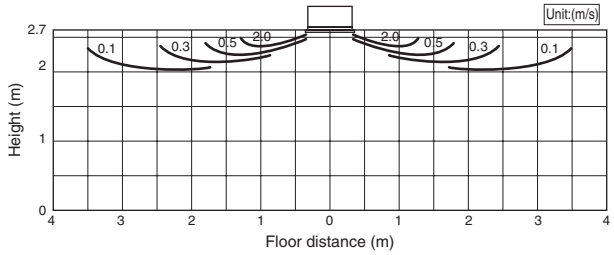

<Heating mode>
Airflow angle : Downward
Room temp.: 20˚C
Airflow rate : High

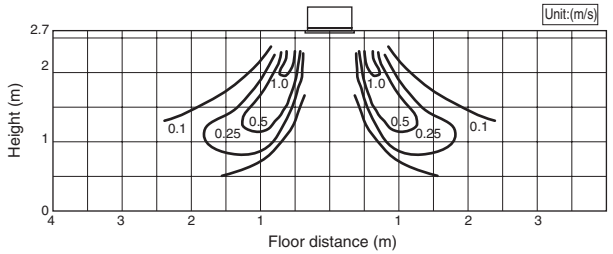

Note : These figures show typical airflow distributions in the conditions above. In the actual installation, they may differ from these figures under the influence of air temperature conditions, ceiling height, cooling/heating load,obstacles,etc.

PLFY

7. Optional parts for PLFY-P-VLMD-E

■ Optional parts line up for the Indoor unit

	OA duct flange
PLFY-P-VLMD-E	PAC-KH11OF

● PLFY-P-VLMD-E

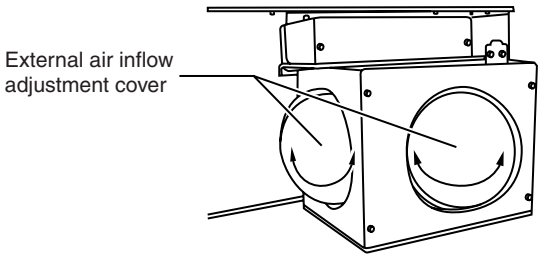

■ OA duct flange PAC-KH11OF for PLFY-P-VLMD-E

OA duct flange PAC-KH11OF makes outside fresh air ducting to the Indoor unit easier.

Material: Galvanized steel plate, with insulation sheet adhered.

Item	① External air intake ducting	② Ducting flange	③ PTT screws (4×10)
Quantity	1	1	10 (two spares)
Shape	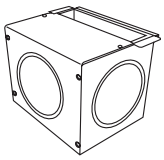	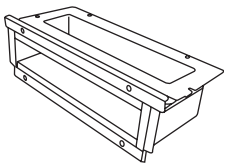	

Detailed installation information should be referred to its Installation Manual (WT03833X06)

PLFY

PLFY-P-VCM-E
PLFY-P-VBM-E

1. SPECIFICATIONS 1 - 120

2. EXTERNAL DIMENSIONS 1 - 123

3. CENTER OF GRAVITY 1 - 125

4. ELECTRICAL WIRING DIAGRAMS 1 - 126

5. SOUND LEVELS
   5-1. Sound levels 1 - 128
   5-2. NC curves 1 - 128

6. TEMPERATURE/AIRFLOW DISTRIBUTIONS
   6-1. Temperature distributions 1 - 130
   6-2. Airflow distributions 1 - 132

7. Optional parts for PLFY-P-VBM-E 1 - 133

1. SPECIFICATIONS

Model			PLFY-P20VCM-E	PLFY-P25VCM-E	PLFY-P32VCM-E	PLFY-P40VCM-E
Power source			1-phase 220-240V 50Hz			
Cooling capacity (Nominal)	✻1	kW	2.2	2.8	3.6	4.5
	✻1	kcal / h	1,900	2,400	3,100	3,900
	✻1	Btu / h	7,500	9,600	12,300	15,400
	✻2	kcal / h	2,000	2,500	3,150	4,000
✻4	Power input	kW	0.05	0.05	0.06	0.06
✻4	Current input	A	0.23	0.23	0.28	0.28
Heating capacity (Nominal)	✻3	kW	2.5	3.2	4.0	5.0
	✻3	kcal / h	2,200	2,800	3,400	4,300
	✻3	Btu / h	8,500	10,900	13,600	17,100
✻4	Power input	kW	0.05	0.05	0.06	0.06
✻4	Current input	A	0.23	0.23	0.28	0.28
External finish			Galvanized steel sheet, with grey heat insulation			
External dimension H x W x D		mm	208 x 570 x 570	208 x 570 x 570	208 x 570 x 570	208 x 570 x 570
		in.	8-1/4 x 22-1/2 x 22-1/2	8-1/4 x 22-1/2 x 22-1/2	8-1/4 x 22-1/2 x 22-1/2	8-1/4 x 22-1/2 x 22-1/2
Net weight		kg (lb)	15.5 (35)	15.5 (35)	17 (38)	17 (38)
Decoration panel	Model		**SLP-2AA**	**SLP-2AA**	**SLP-2AA**	**SLP-2AA**
	External finish		White Munsell(0.7Y 8.59/0.97)			
	Dimension H x W x D	mm	20 x 650 x 650	20 x 650 x 650	20 x 650 x 650	20 x 650 x 650
		in.	13/16 x 25-5/8 x 25-5/8	13/16 x 25-5/8 x 25-5/8	13/16 x 25-5/8 x 25-5/8	13/16 x 25-5/8 x 25-5/8
	Net Weight	kg (lb)	3 (7)	3 (7)	3 (7)	3 (7)
	Cord heater	kW	0.015	0.015	0.015	0.015
Heat exchanger			Cross fin & copper tube			
FAN	Type x Quantity		Turbo fan x 1			
	External static press.		0Pa (0mmH_2O)	0Pa (0mmH_2O)	0Pa (0mmH_2O)	0Pa (0mmH_2O)
	Motor type		Single phase induction motor			
	Motor output	kW	0.011	0.015	0.02	0.02
	Driving mechanism		Direct-driven by motor			
	Airflow rate	m^3 / min	8-9-10	8-9-10	8-9-11	8-9-11
		L / s	133-150-167	133-150-167	133-150-183	133-150-183
		cfm	283-318-353	283-318-353	283-318-388	283-318-388
Sound pressure level (Low-Mid-High) (measured in anechoic room) ✻4		dB <A>	28-31-35 (230V)	28-31-37 (230V)	29-33-38 (230V)	30-34-39 (230V)
Insulation material			Polyethylene foam (softlon FR)			
Air filter			PP honeycomb fabric (long life type)			
Protection device			Fuse			
Refrigerant control device			LEV			
Connectable outdoor unit			R410A CITY MULTI			
Diameter of refrigerant pipe	Liquid	mm (in.)	ø6.35 (ø1/4) Flare	ø6.35 (ø1/4) Flare	ø6.35 (ø1/4) Flare	ø6.35 (ø1/4) Flare
	Gas	mm (in.)	ø12.7 (ø1/2) Flare	ø12.7 (ø1/2) Flare	ø12.7 (ø1/2) Flare	ø12.7 (ø1/2) Flare
Field drain pipe size		mm (in.)	O.D. 32 (1-1/4)			
Drawing	External		IU-VRG01N654			
	Wiring		IU-VRG79N625			
	Refrigerant circle		-			
Standard attachment	Document		Installation manual, Instruction book			
	Accessory		Drain hose I.D. 32mm (1-1/4) (flexible joint)			
Remark	Optional parts		Decoration panel : SLP-2AA *PLFY-P-VCM-E should use together with SLP-2AA.			
	Installation		Details on foundation work, duct work, insulation work, electrical wiring, power source switch, and other items shall be referred to the Installation Manual.			

Note :

	✻1 Nominal cooling condition	✻2 Nominal cooling condition	✻3 Nominal heating condition
Indoor :	27˚CDB/19˚CWB (81˚FDB/66˚FWB)	27˚CDB/19.5˚CWB (81˚FDB/67˚FWB)	20˚CDB (68˚FDB)
Outdoor :	35˚CDB (95˚FDB)	35˚CDB (95˚FDB)	7˚CDB/6˚CWB (45˚FDB/43˚FWB)
Pipe length :	7.5 m (24-9/16 ft)	5 m (16-3/8 ft)	7.5 m (24-9/16 ft)
Level difference :	0 m (0 ft)	0 m (0 ft)	0 m (0 ft)

* Nominal conditions ✻1, ✻3 are subject to JIS B8615-1.
* Due to continuing improvement, above specification may be subject to change without notice.

✻4 The values are measured at the rated external static pressure.

Unit converter

kcal = kW x 860
Btu/h = kW x 3,412
cfm = m^3/min x 35.31
lb = kg / 0.4536

Ref.: Spec_PLFY-P-VCM-E

1. SPECIFICATIONS

Model			PLFY-P32VBM-E	PLFY-P40VBM-E	PLFY-P50VBM-E	PLFY-P63VBM-E
Power source			1-phase 220-240V 50Hz, 1-phase 220V 60Hz			
Cooling capacity (Nominal)	✻1	kW	3.6	4.5	5.6	7.1
	✻1	kcal / h	3,100	3,900	4,800	6,100
	✻1	Btu / h	12,300	15,400	19,100	24,200
	✻2	kcal / h	3,150	4,000	5,000	6,300
✻4	Power input	kW	0.03	0.04	0.04	0.05
✻4	Current input	A	0.22	0.29	0.29	0.36
Heating capacity (Nominal)	✻3	kW	4.0	5.0	6.3	8.0
	✻3	kcal / h	3,400	4,300	5,400	6,900
	✻3	Btu / h	13,600	17,100	21,500	27,300
✻4	Power input	kW	0.02	0.03	0.03	0.04
✻4	Current input	A	0.14	0.22	0.22	0.29
External finish			Galvanized steel sheet			
External dimension H x W x D		mm	258 x 840 x 840			
		in.	10-3/16 x 33-1/8 x 33-1/8			
Net weight		kg (lb)	22 (49)	22 (49)	22 (49)	23 (51)
Decoration panel	Model		**PLP-6BA**	**PLP-6BA**	**PLP-6BA**	**PLP-6BA**
	External finish		MUNSELL (6.4Y 8.9/0.4)			
	Dimension H x W x D	mm	35 x 950 x 950			
		in.	1-3/8 x 37-7/16 x 37-7/16			
	Net weight	kg (lb)	6 (13)			
Heat exchanger			Cross fin (Aluminum fin and copper tube)			
FAN	Type x Quantity		Turbo fan x 1	Turbo fan x 1	Turbo fan x 1	Turbo fan x 1
	External static press.	Pa	0	0	0	0
		mmH_2O	0	0	0	0
	Motor type		DC motor			
	Motor output	kW	0.050	0.050	0.050	0.050
	Driving mechanism		Direct-drive			
	Airflow rate (Low-Mid2-Mid1-High)	m^3 / min	11 - 12 - 13 - 14	12 - 13 - 14 - 16	12 - 13 - 14 - 16	14 - 15 - 16 - 18
		L / s	183 - 200 - 217 - 233	200 - 217 - 233 - 267	200 - 217 - 233 - 267	233 - 250 - 267 - 300
		cfm	388 - 424 - 459 - 494	424 - 459 - 494 - 565	424 - 459 - 494 - 565	494 - 530 - 565 - 636
Sound pressure level (Low-Mid2-Mid1-High) (measured in anechoic room) ✻4		dB <A>	27 - 28 - 29 - 31	27 - 28 - 30 - 31	27 - 28 - 30 - 31	28 - 29 - 30 - 32
Insulation material			PS			
Air filter			PP honeycomb			
Protection device			Fuse			
Refrigerant control device			LEV			
Connectable outdoor unit			R410A CITY MULTI			
Diameter of refrigerant pipe	Liquid (R410A)	mm (in.)	ϕ6.35 (ϕ1/4) Flare	ϕ6.35 (ϕ1/4) Flare	ϕ6.35 (ϕ1/4) Flare	ϕ9.52 (ϕ3/8) Flare
	Gas (R410A)	mm (in.)	ϕ12.7 (ϕ1/2) Flare	ϕ12.7 (ϕ1/2) Flare	ϕ12.7 (ϕ1/2) Flare	ϕ15.88 (ϕ5/8) Flare
Field drain pipe size		mm (in.)	O.D. 32 (1-1/4)			
Standard attachment	Document Accessory		Installation Manual, Instruction Book			
Remark	Optional parts					
	Decoration panel **1		PLP-6BA	PLP-6BA	PLP-6BA	PLP-6BA
	Air outlet shutter plate		PAC-SH51SP-E	PAC-SH51SP-E	PAC-SH51SP-E	PAC-SH51SP-E
	High efficiency filter element **2		PAC-SH59KF-E	PAC-SH59KF-E	PAC-SH59KF-E	PAC-SH59KF-E
	Multi-function casement		PAC-SH53TM-E	PAC-SH53TM-E	PAC-SH53TM-E	PAC-SH53TM-E
			**1.PLFY-P-VBM-E should use together with PLP-6BA. **2.PAC-SH53TM-E is necessary to use with filter PAC-SH59KF-E.			
	Installation		Details on foundation work, duct work, insulation work, electrical wiring, power source switch, and other items shall be referred to the Installation Manual.			

Note :

	✻1 Nominal cooling conditions	✻2 Nominal cooling conditions	✻3 Nominal heating conditions
Indoor :	27℃DB/19℃WB (81°FDB/66°FWB)	27℃DB/19.5℃WB (81°FDB/67°FWB)	20℃DB (68°FDB)
Outdoor :	35℃DB (95°FDB)	35℃DB (95°FDB)	7℃DB/6℃WB (45°FDB/43°FWB)
Pipe length :	7.5 m (24-9/16 ft)	5 m (16-3/8 ft)	7.5 m (24-9/16 ft)
Level difference :	0 m (0 ft)	0 m (0 ft)	0 m (0 ft)

* Nominal conditions 1, 3 are subject to JIS B8615-1.
* Due to continuing improvement, above specification may be subject to change without notice.

✻4 The values are measured at the rated external static pressure.

Unit converter

kcal/h = kW x 860
Btu/h = kW x 3,412
cfm = m^3/min x 35.31
lb = kg / 0.4536

*Above specification data is subject to rounding variation.

PLFY-VCM/VBM

1. SPECIFICATIONS

Model			PLFY-P80VBM-E	PLFY-P100VBM-E	PLFY-P125VBM-E
Power source			1-phase 220-240V 50Hz, 1-phase 220V 60Hz		
Cooling capacity (Nominal)	＊1	kW	9.0	11.2	14.0
	＊1	kcal / h	7,700	9,600	12,000
	＊1	Btu / h	30,700	38,200	47,800
	＊2	kcal / h	8,000	10,000	12,500
＊4	Power input	kW	0.07	0.15	0.16
＊4	Current input	A	0.51	1.00	1.07
Heating capacity (Nominal)	＊3	kW	10.0	12.5	16.0
	＊3	kcal / h	8,600	10,800	13,800
	＊3	Btu / h	34,100	42,700	54,600
＊4	Power input	kW	0.06	0.14	0.15
＊4	Current input	A	0.43	0.94	1.00
External finish			Galvanized steel sheet		
External dimension H x W x D		mm	258 x 840 x 840	298 x 840 x 840	
		in.	10-3/16 x 33-1/8 x 33-1/8	11-3/4 x 33-1/8 x 33-1/8	
Net weight		kg (lb)	23(51)	27(60)	27(60)
Decoration panel	Model		**PLP-6BA**	**PLP-6BA**	**PLP-6BA**
	External finish		MUNSELL (6.4Y 8.9/0.4)		
	Dimension H x W x D	mm	35 x 950 x 950		
		in.	1-3/8 x 37-7/16 x 37-7/16		
	Net weight	kg (lb)	6(13)		
Heat exchanger			Cross fin (Aluminum fin and copper tube)		
FAN	Type x Quantity		Turbo fan x 1	Turbo fan x 1	Turbo fan x 1
	External static press.	Pa	0	0	0
		mmH_2O	0	0	0
	Motor type		DC motor		
	Motor output	kW	0.050	0.120	0.120
	Driving mechanism		Direct-drive		
	Airflow rate (Low-Mid2-Mid1-High)	m^3 / min	16 - 18 - 20 - 22	21 - 24 - 27 - 29	22 - 25 - 28 - 30
		L / s	267 - 300 - 333 - 367	350 - 400 - 450 - 483	367 - 417 - 467 - 500
		cfm	565 - 636 - 706 - 777	742 - 848 - 953 - 1024	777 - 883 - 989 - 1059
Sound prseeure level (Low-Mid2-Mid1-High) (measured in anechoic room) ＊4		dB <A>	30 - 32 - 35 - 37	34 - 37 - 39- 41	35 - 38 - 41 - 43
Insulation material			PS		
Air filter			PP honeycomb		
Protection device			Fuse		
Refrigerant control device			LEV		
Connectable outdoor unit			R410A CITY MULTI		
Diameter of refrigerant pipe	Liquid (R410A)	mm (in.)	ϕ9.52 (ϕ3/8) Flare	ϕ9.52 (ϕ3/8) Flare	ϕ9.52 (ϕ3/8) Flare
	Gas (R410A)	mm (in.)	ϕ15.88 (ϕ5/8) Flare	ϕ15.88 (ϕ5/8) Flare	ϕ15.88 (ϕ5/8) Flare
Field drain pipe size		mm (in.)	O.D. 32 (1-1/4)		
Standard attachment	Document Accessory		Installation Manual, Instruction Book		
Remark	Optional parts				
	Decoration panel **1		PLP-6BA	PLP-6BA	PLP-6BA
	Air outlet shutter plate		PAC-SH51SP-E	PAC-SH51SP-E	PAC-SH51SP-E
	High efficiency filter element **2		PAC-SH59KF-E	PAC-SH59KF-E	PAC-SH59KF-E
	Multi-function casement		PAC-SH53TM-E	PAC-SH53TM-E	PAC-SH53TM-E
			**1.PLFY-P-VBM-E should use together with PLP-6BA. **2.PAC-SH53TM-E is necessary to use with filter PAC-SH59KF-E.		
	Installation		Details on foundation work, duct work, insulation work, electrical wiring, power source switch, and other items shall be referred to the Installation Manual.		

Note :

	＊1 Nominal cooling conditions	＊2 Nominal cooling conditions	＊3 Nominal heating conditions
Indoor :	27℃DB/19℃WB (81°FDB/66°FWB)	27℃DB/19.5℃WB (81°FDB/67°FWB)	20℃DB (68°FDB)
Outdoor :	35℃DB (95°FDB)	35℃DB (95°FDB)	7℃DB/6°CWB (45°FDB/43°FWB)
Pipe length :	7.5 m (24-9/16 ft)	5 m (16-3/8 ft)	7.5 m (24-9/16 ft)
Level difference :	0 m (0 ft)	0 m (0 ft)	0 m (0 ft)

* Nominal conditions 1, 3 are subject to JIS B8615-1.
* Due to continuing improvement, above specification may be subject to change without notice.

＊4 The values are measured at the rated external static pressure.

Unit converter

kcal/h = kW x 860
Btu/h = kW x 3,412
cfm = m^3/min x 35.31
lb = kg / 0.4536

*Above specification data is subject to rounding variation.

PLFY-VCM/VBM

2. EXTERNAL DIMENSIONS

PLFY-P20,25,32,40VCM-E

Drw. : IU-RG01-N654
Unit : mm

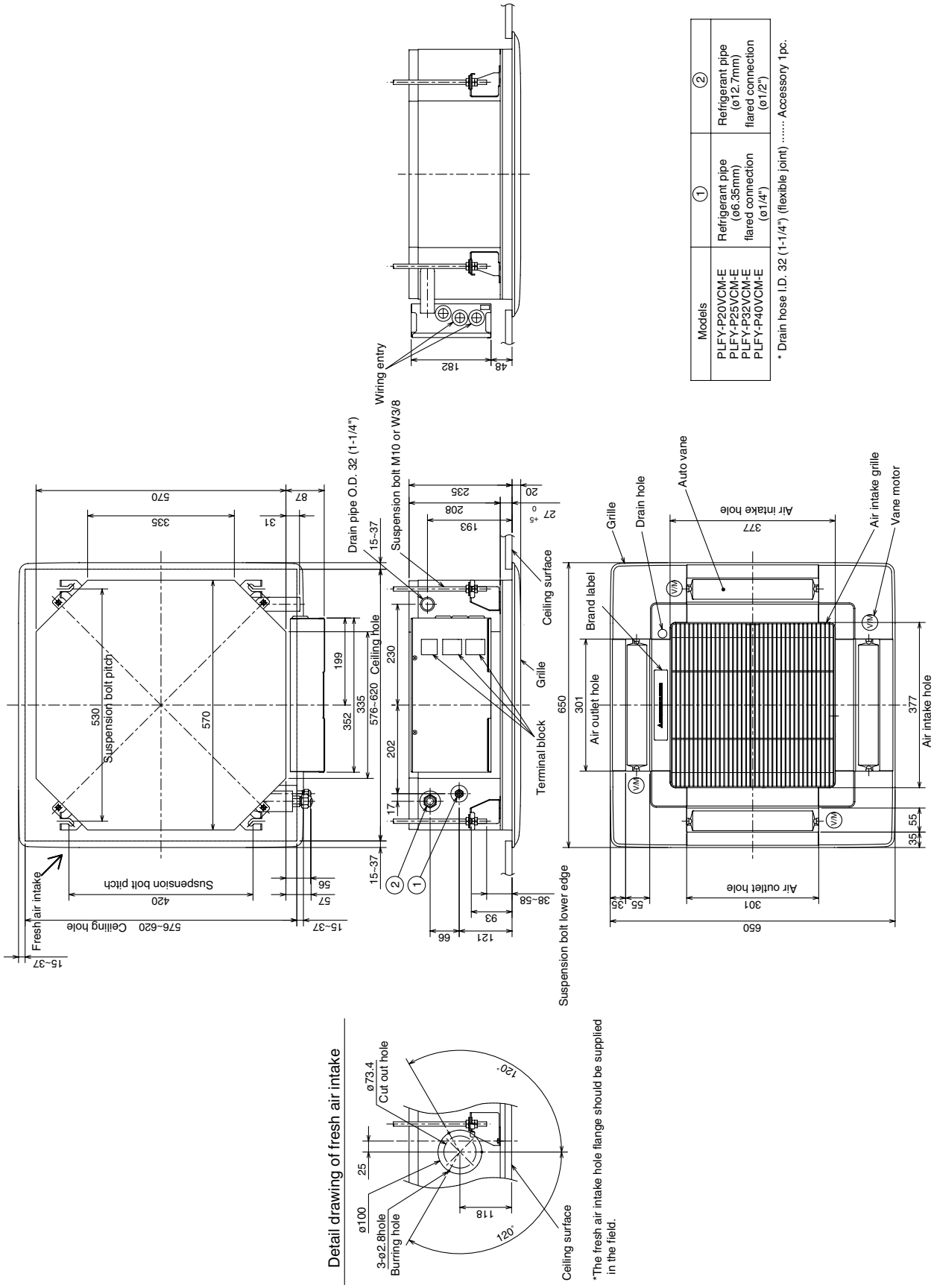

Models	①	②
PLFY-P20VCM-E PLFY-P25VCM-E PLFY-P32VCM-E PLFY-P40VCM-E	Refrigerant pipe (ø6.35mm) flared connection (ø1/4")	Refrigerant pipe (ø12.7mm) flared connection (ø1/2")

* Drain hose I.D. 32 (1-1/4") (flexible joint) ..... Accessory 1pc.

PLFY-VCM/VBM

PLFY-P32,40,50,63,80,100,125VBM-E

Unit : mm

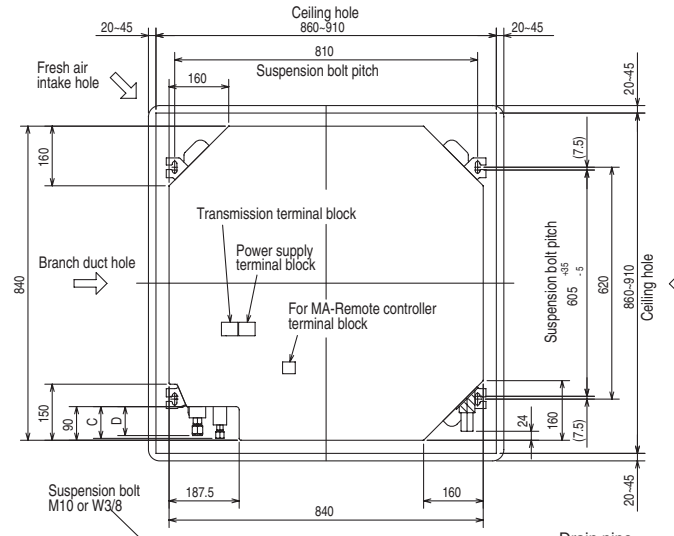

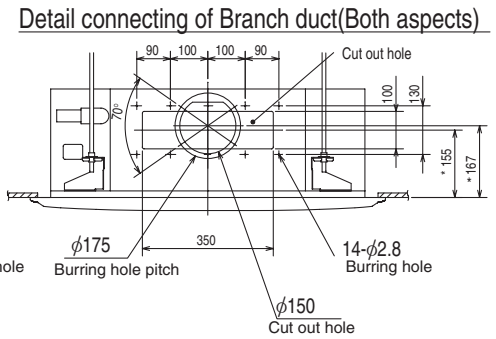

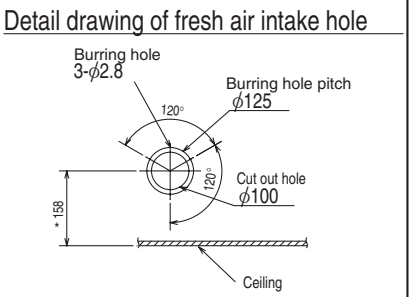

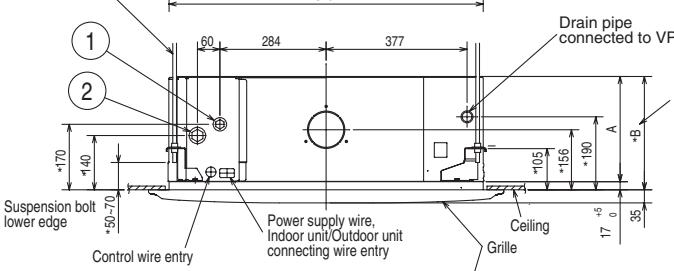

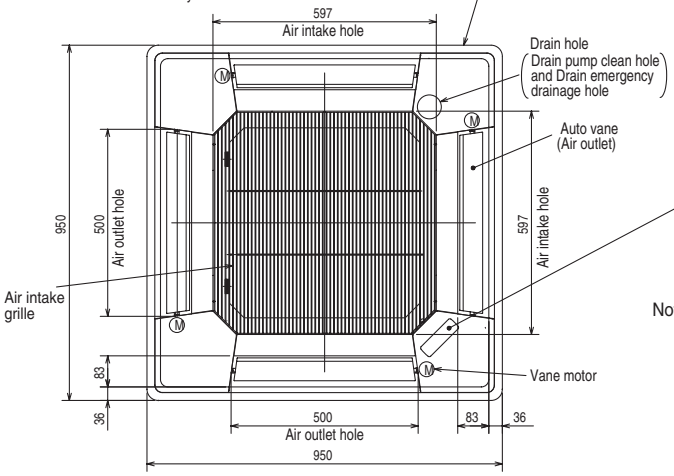

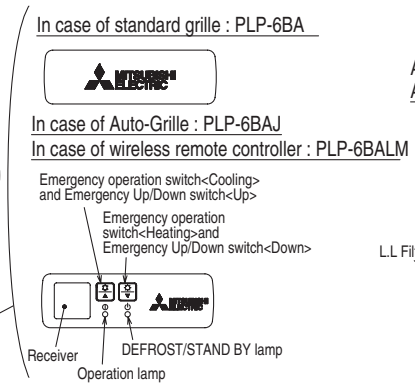

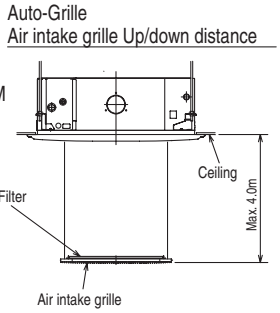

Note 1. Please choose the Grille from a standard grille, Auto-Grille.
2. As for drain pipe, please use VP-25(O.D. ϕ32 PVC TUBE).
Drain pump inclusion.
Raise is max 850mm from the ceiling.
3. As for suspension bolt, please use M10 or W3/8. (Procured at local site)
4. Electrical box may be removed for the service purpose.
Make sure to slack the electrical wire little bit for control/power wires connection.
5. The height of the indoor unit is able to be adjusted with the grille attached.
6. For the installation of the optional high efficiency filter or optional multi-functional casement.
1) Requires E or more space between transom and ceiling for the installation.
2) Add 135 mm to the dimensions * marked on the figure.
3) The optional high efficiency filter becomes optional multi-functional casement and concomitant use.
7. When installing the branch ducts, be sure to insulate adequately.
Otherwise condensation and dripping may occur.
(It becomes the cause of dew drops/Wear dew.)
8. As for necessary installation/service space, please refer to the under at figure.

Accessory ··· Drain socket (I.D. 32)

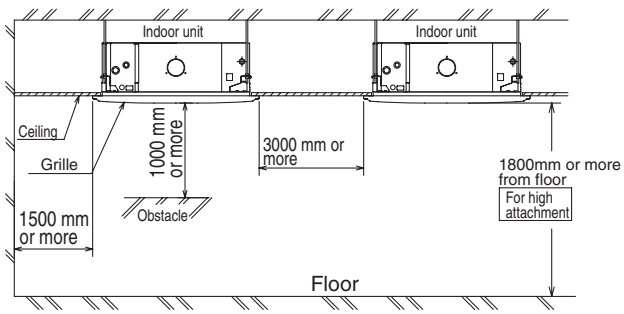

Models	①	②	A	B	C	D	E
PLFY-P32,40VBM-E	Refrigerant pipe···ϕ 6.35 Flared connection···1/4F	Refrigerant pipe ···ϕ12.7 Flared connection···1/2F	241	258	80	74	400
PLFY-P50VBM-E	Refrigerant pipe ϕ6.35 /ϕ9.52 Flared connection 1/4F / 3/8F (compatible)	Refrigerant pipe ϕ12.7 Flared connection 1/2F			87	78	
PLFY-P63,80VBM-E	Refrigerant pipe···3/8F Flared connection···ϕ9.52	Refrigerant pipe···ϕ15.88 Flared connection···5/8F			85	77	
PLFY-P100,125VBM-E		Refrigerant pipe ϕ15.88 Flared connection 5/8F	281	298		81	440

PLFY-P20,25,32,40VCM-E

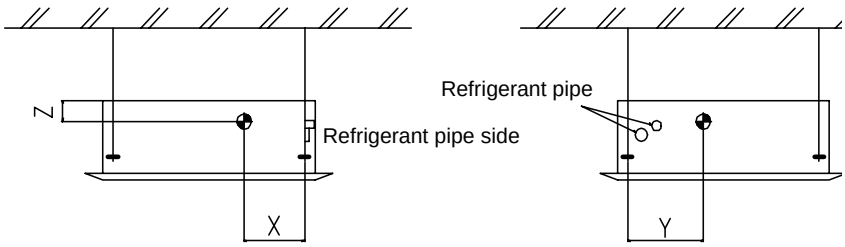

(mm)[in]

Model name	X	Y	Z
PLFY-P20VCM-E	150 [5-29/32]	260 [10-1/4]	105 [4-5/32]
PLFY-P25VCM-E	150 [5-29/32]	260 [10-1/4]	105 [4-5/32]
PLFY-P32VCM-E	150 [5-29/32]	260 [10-1/4]	105 [4-5/32]
PLFY-P40VCM-E	150 [5-29/32]	260 [10-1/4]	105 [4-5/32]

PLFY-P32,40,50,63,80,100,125VBM-E

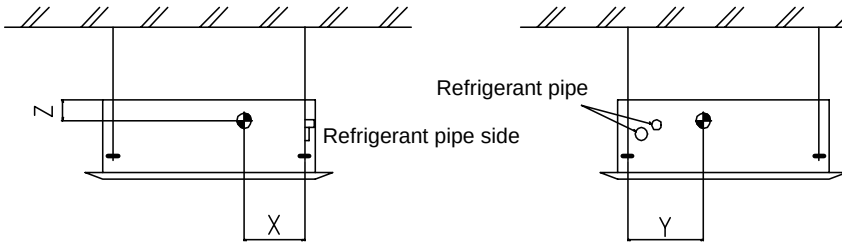

(mm)[in]

Model name	X	Y	Z
PLFY-P32VBM-E	280 [11-1/32]	400 [15-3/4]	105 [4-5/32]
PLFY-P40VBM-E	280 [11-1/32]	400 [15-3/4]	105 [4-5/32]
PLFY-P50VBM-E	280 [11-1/32]	400 [15-3/4]	105 [4-5/32]
PLFY-P63VBM-E	280 [11-1/32]	400 [15-3/4]	105 [4-5/32]
PLFY-P80VBM-E	280 [11-1/32]	400 [15-3/4]	105 [4-5/32]
PLFY-P100VBM-E	280 [11-1/32]	400 [15-3/4]	125 [4-15/16]
PLFY-P125VBM-E	280 [11-1/32]	400 [15-3/4]	125 [4-15/16]

PLFY-P20,25,32,40VCM-E

Drw. : IU-RG79-N625

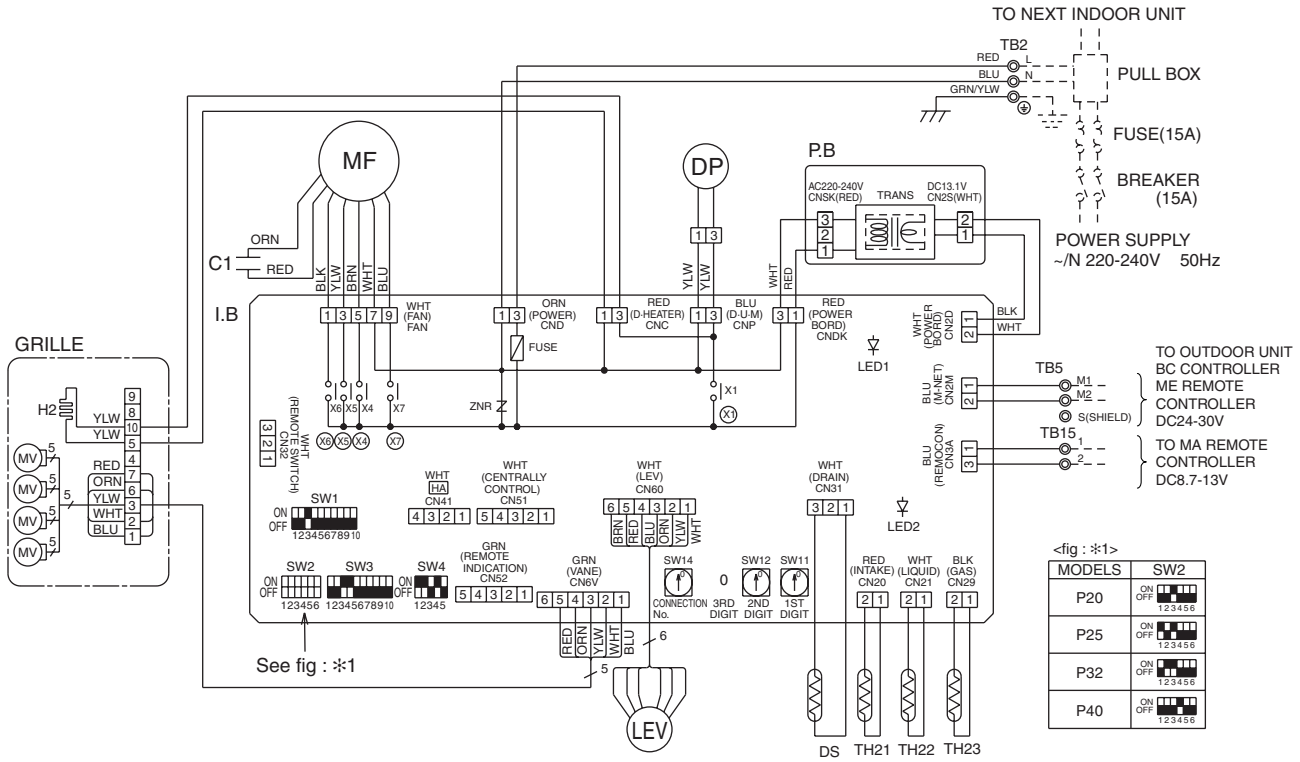

[LEGEND]

SYMBOL		NAME		SYMBOL	NAME	
I.B		INDOOR CONTROLLER BOARD		C1	CAPACITOR (FAN MOTOR)	
	CN32	CONNECTOR	REMOTE SWITCH	DP	DRAIN WATER LIFTING-UP MACHINE	
	CN41		HA TERMINAL-A	DS	DRAIN SENSOR	
	CN51		CENTRALLY CONTROL	H2	DEW PREVENTION HEATER	
	CN52		REMOTE INDICATION	LEV	LINEAR EXPANSION VALVE	
	FUSE	FUSE (6.3A/250V)		MF	FAN MOTOR (WITH THERMAL FUSE)	
	SW1	SWITCH	MODE SELECTION	MV	VANE MOTOR	
	SW2		CAPACITY CODE	TB2	TERMINAL BLOCK	POWER SUPPLY
	SW3		MODE SELECTION	TB5		TRANSMISSION
	SW4		MODEL SELECTION	TB15		MA REMOTE CONTROLLER
	SW11		ADDRESS SETTING 1ST DIGIT	TH21	THERMISTOR	ROOM TEMP. DETECTION (0˚C/15kΩ, 25˚C/5.4kΩ)
	SW12		ADDRESS SETTING 2ND DIGIT			
	SW14		CONNECTION No.	TH22		PIPE TEMP. DETECTION/LIQUID (0˚C/15kΩ, 25˚C/5.4kΩ)
	X1	AUX. RELAY	DRAIN PUMP/DEW PREVENTION HEATER			
	X4		FAN MOTOR (LL)	TH23		PIPE TEMP. DETECTION/GAS (0˚C/15kΩ, 25˚C/5.4kΩ)
	X5		FAN MOTOR (Lo)			
	X6		FAN MOTOR (Hi)	P.B	INDOOR POWER BOARD	
	X7		FAN MOTOR (Me)			
	ZNR	VARISTOR				

Notes:
1.At servicing for outdoor unit,always follow the wiring diagram of outdoor unit.
2.In case of using MA Remote controller, please connect to TB15. (Remote controller wire is non-polar.)
3.In case of using M-NET, please connect to TB5. (Transmission line is non-polar.)
4.Symbol[S] of TB5 is the shield wire connection.
5.Symbols used in wiring diagram above are, ◎ :terminal block, ▭▭ :connecter.
6.The setting of the SW2 dip switches differs in the capacity for the detail,refer to the fig : ✻1.

LED on indoor board for service

Mark	Meaning	Function
LED1	Main power supply	Main power supply(Indoor unit:220-240V) power on → lamp is lit
LED2	Power supply for MA Remote controller	Power supply for MA Remote controller on → lamp is lit

PLFY-P32,40,50,63,80,100,125VBM-E

[LEGEND]

SYMBOL		NAME		SYMBOL	NAME		SYMBOL	NAME		SYMBOL	NAME
I. B		INDOOR CONTROLLER BOARD		TB2	TERMINAL BLOCK	POWER SUPPLY	OPTION PART				
	CN27	CONNECTOR	DAMPER	TB5		TRANSMISSION		W.B			PCB FOR WIRELESS REMOTE CONTROLLER
	CN32		REMOTE SWITCH	TB15		MA-REMOTE CONTROLLER			BZ		BUZZER
	CN51		CENTRALLY CONTROL	TH21	THERMISTOR	ROOM TEMP. DETECTION (0℃ / 15kΩ, 25℃ / 5.4kΩ)			LED1		LED (OPERATION INDICATION : GREEN)
	CN52		REMOTE INDICATION						LED2		LED (PREPARATION FOR HEATING : ORANGE)
	DSA	SURGE ABSORBER		TH22		PIPE TEMP. DETECTION / LIQUID (0℃ / 15kΩ, 25℃ / 5.4kΩ)			RU		RECEVING UNIT
	FUSE	FUSE (T6.3AL250V)							SW1		EMERGENCY OPERATION (HEAT / DOWN)
	LED1	POWER SUPPLY (I. B)		TH23		PIPE TEMP. DETECTION / GAS (0℃ / 15kΩ, 25℃ / 5.4kΩ)			SW2		EMERGENCY OPERATION (COOL / UP)
	LED2	POWER SUPPLY (I. B)									
	SW2	SWITCH	CAPACITY CODE	A. B		ADDRESS BOARD					
	SW3		MODE SELECTION		SWA	SWITCH	CEILING HEIGHT SELECTOR				
	SW4		MODEL SELECTION		SWB		DISCHARGE OUTLET NUMBER SELECTOR				
	SWE		DRAIN-UP MACHINE (TEST MODE)								
	X1	AUX. RELAY	DRAIN WATER LIFTING-UP MACH.		SWC		OPTION SELECTOR				
	ZNR01,02	VARISTOR			SW1		MODE SELECTION				
DP		DRAIN-UP MACHINE			SW11		ADDRESS SETTING 1ST DIGIT				
FS		DRAIN FLOAT SWITCH			SW12		ADDRESS SETTING 2ND DIGIT				
LEV		LINEAR EXPANSION VALVE			SW14		CONNECTION NO.				
MF		FAN MOTOR									
MV		VANE MOTOR									

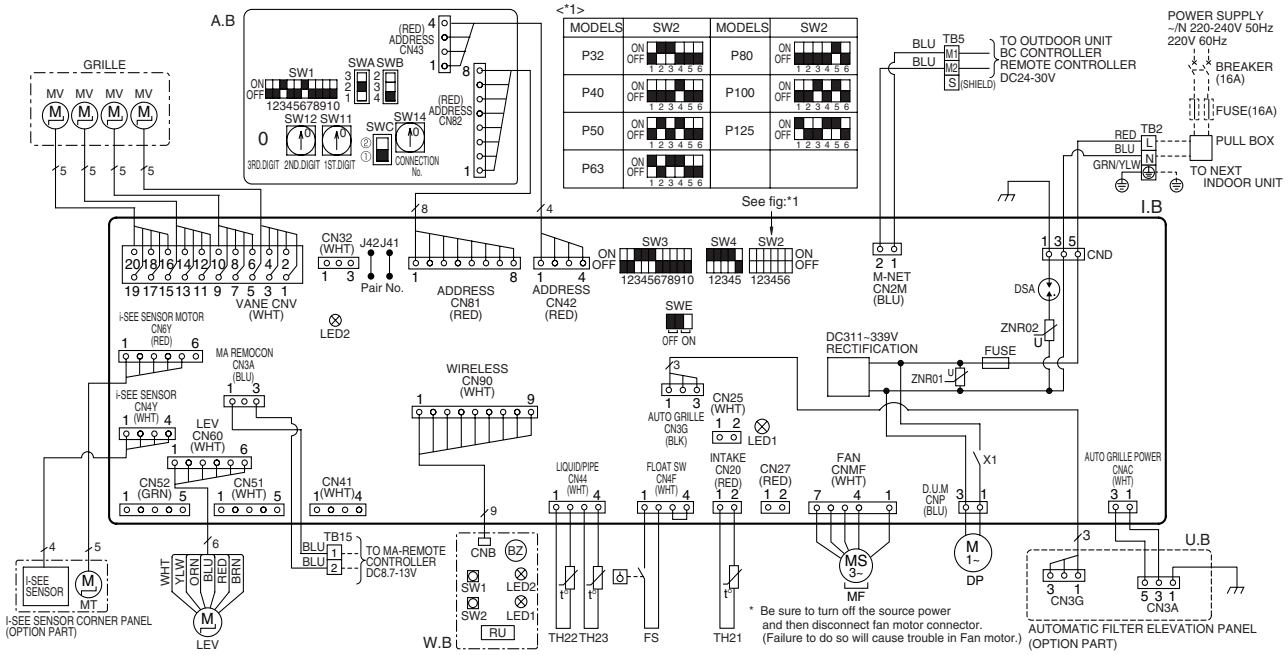

NOTES:

1. At servicing for outdoor unit, always follow the wiring diagram of outdoor unit.
2. In case of using MA-Remote controller, please connect to TB15.
   (Remote controller wire is non-polar.)
3. In case of using M-NET, please connect to TB5. (Transmission line is non-polar.)
4. Symbol [S] of TB5 is the shield wire connection.
5. Symbols used in wiring diagram above are, ▭▭▭: terminal block, ▭▭▭: connecter.
6. The setting of the SW2 dip switches differs in the capacity. For the detail, refer to fig<*1>.

LED on indoor board for service

Mark	Meaning	Function
LED1	Main power supply	Main Power supply (Indoor unit:220-240V) power on → lamp is lit
LED2	Power supply for MA-Remote controller	Power supply for MA-Remote controller on → lamp is lit

5. SOUND LEVELS

5-1. Sound levels

PLFY-P-VCM-E, VBM-E

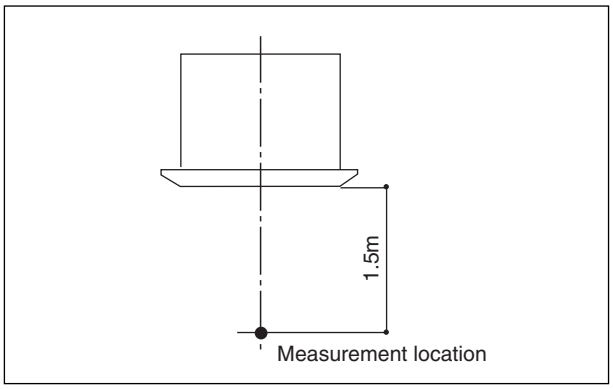

Sound level at anechoic room : Low-Mid-High

	Sound level dB (A)
PLFY-P20VCM-E	28-31-35
PLFY-P25VCM-E	28-31-37
PLFY-P32VCM-E	29-33-38
PLFY-P40VCM-E	30-34-39

Sound level at anechoic room : Low-Mid2-Mid1-High

	Sound level dB (A)
PLFY-P32VBM-E	27-28-29-31
PLFY-P40VBM-E PLFY-P50VBM-E	27-28-30-31
PLFY-P63VBM-E	28-29-30-32
PLFY-P80VBM-E	30-32-35-37
PLFY-P100VBM-E	34-37-39-41
PLFY-P125VBM-E	35-38-41-43

* Measured in anechoic room.

5-2. NC curves

PLFY-VCM/VBM

PLFY-P20VCM-E
External static pressure : 0Pa
Power source : 220,230,240V, 50Hz

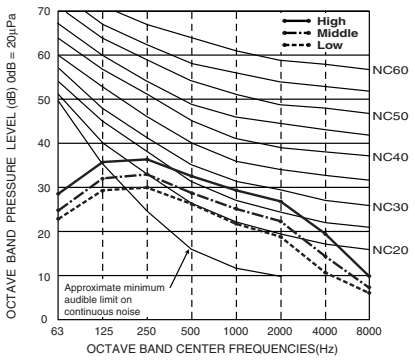

PLFY-P25VCM-E
External static pressure : 0Pa
Power source : 220,230,240V, 50Hz

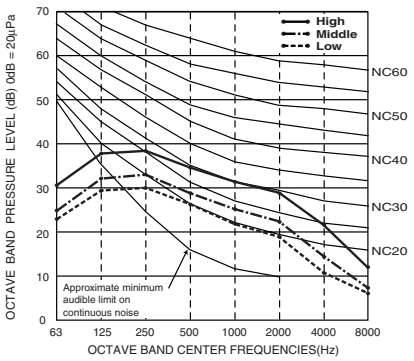

PLFY-P32VCM-E
External static pressure : 0Pa
Power source : 220,230,240V, 50Hz

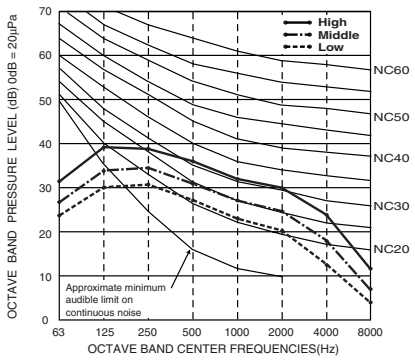

PLFY-P40VCM-E
External static pressure : 0Pa
Power source : 220,230,240V, 50Hz

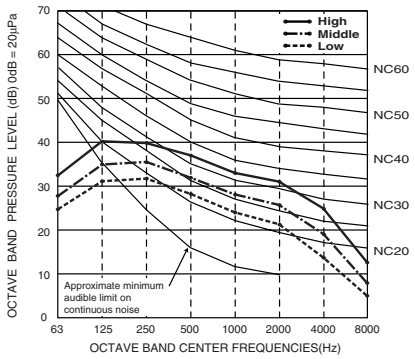

5. SOUND LEVELS

5-2. NC curves

PLFY-P32VBM-E
External static pressure : 0Pa
Power source : 220,230,240V, 50Hz / 220V, 60Hz

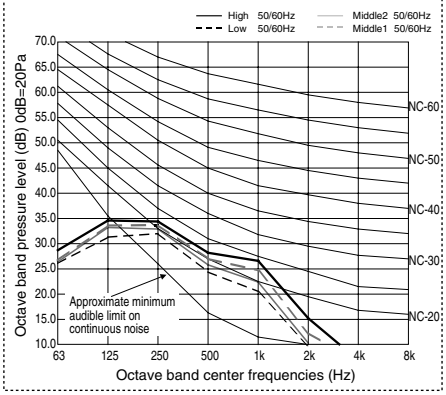

PLFY-P40VBM-E
External static pressure : 0Pa
Power source : 220,230,240V, 50Hz / 220V, 60Hz

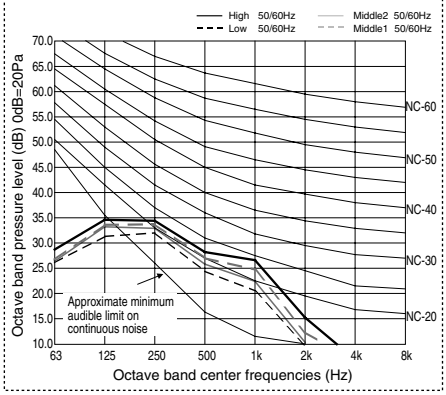

PLFY-P50VBM-E
External static pressure : 0Pa
Power source : 220,230,240V, 50Hz / 220V, 60Hz

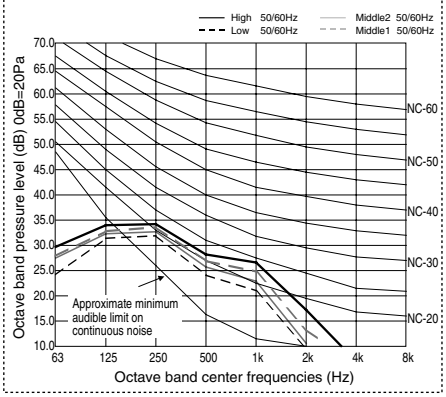

PLFY-P63VBM-E
External static pressure : 0Pa
Power source : 220,230,240V, 50Hz / 220V, 60Hz

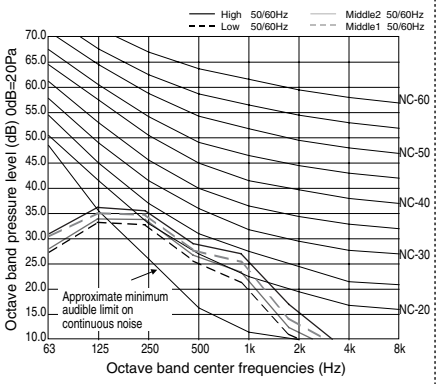

PLFY-P80VBM-E
External static pressure : 0Pa
Power source : 220,230,240V, 50Hz / 220V, 60Hz

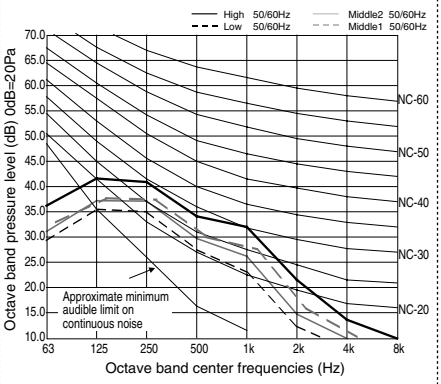

PLFY-P100VBM-E
External static pressure : 0Pa
Power source : 220,230,240V, 50Hz / 220V, 60Hz

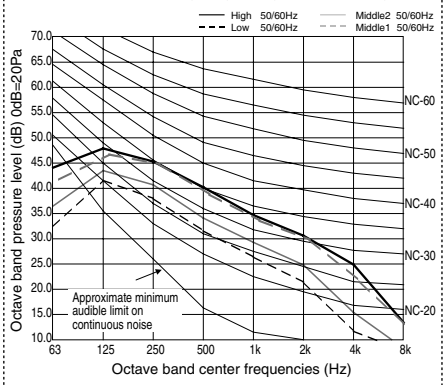

PLFY-P125VBM-E
External static pressure : 0Pa
Power source : 220,230,240V, 50Hz / 220V, 60Hz

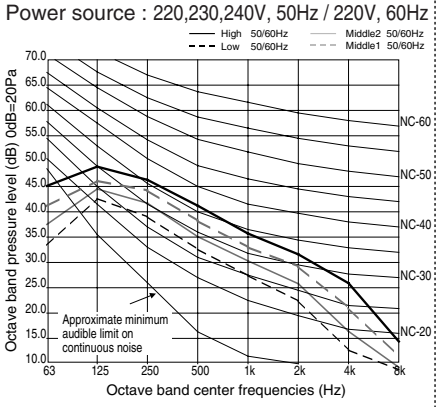

6. TEMPERATURE/AIRFLOW DISTRIBUTIONS

6-1. Temperature distributions

PLFY-P20-40VCM-E

<Cooling mode>
Flow angle 30˚

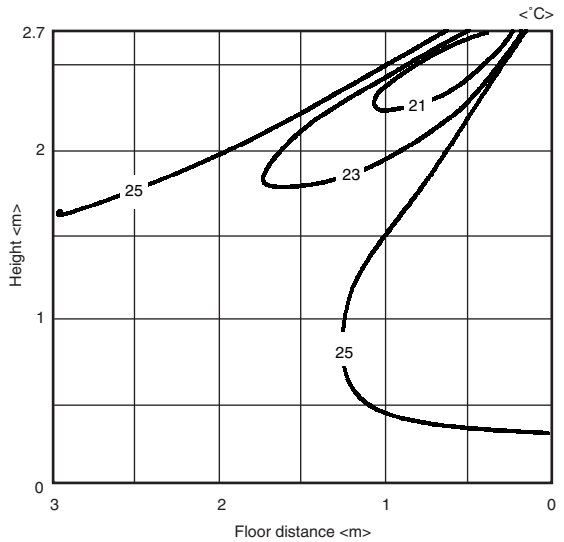

<Heating mode>
Flow angle 70˚

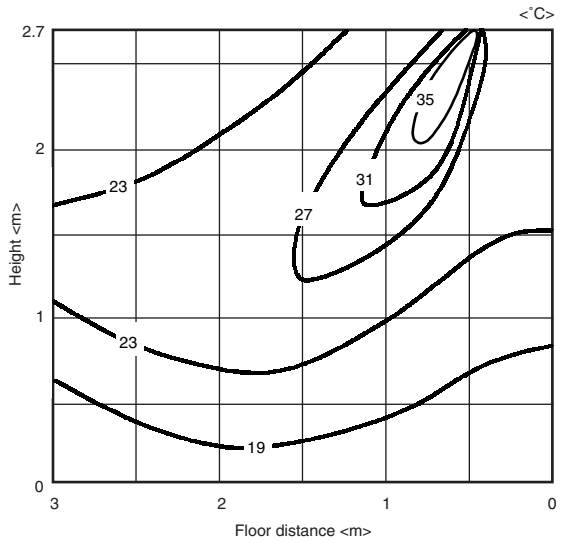

Note : These figures show typical temperature distributions in the conditions above. In the actual installation, they may differ from these figures under the influence of air temperature conditions, ceiling height, cooling/heating load,obstacles,etc.

6. TEMPERATURE/AIRFLOW DISTRIBUTIONS

6-1. Temperature distributions

PLFY-P-VBM-E

• PLFY-P32-80VBM-E
<Cooling mode> Standard
Flow angle : 30° 4-way flow
ceiling height : 2.7 m

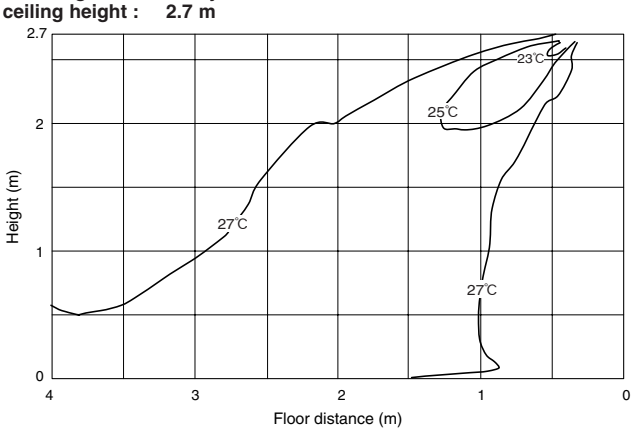

<Heating mode> Standard
Flow angle : 60° 4-way flow
ceiling height : 2.7 m

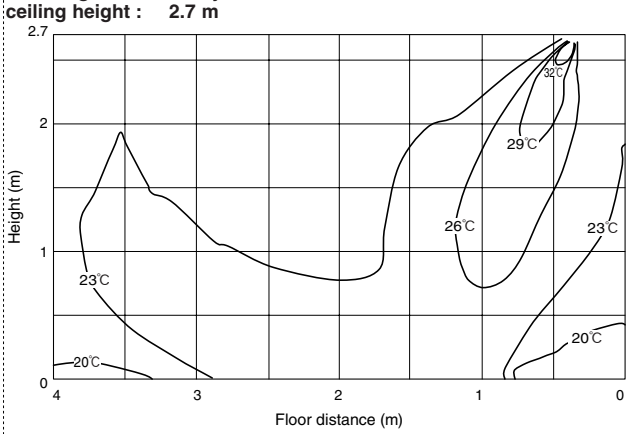

• PLFY-P100, 125VBM-E
<Cooling mode> Standard
Flow angle : 30° 4-way flow
ceiling height : 3.2 m

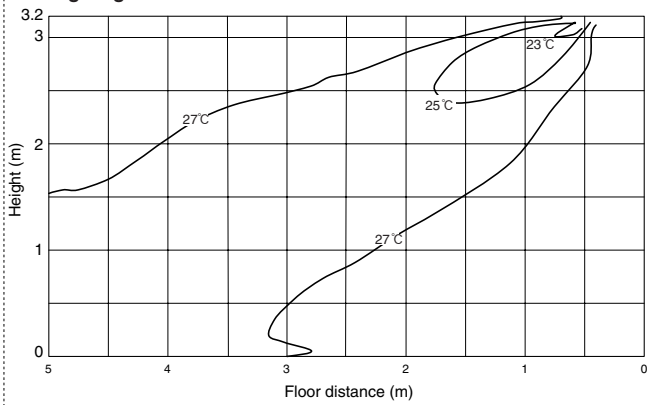

<Heating mode> Standard
Flow angle : 60° 4-way flow
ceiling height : 3.2 m

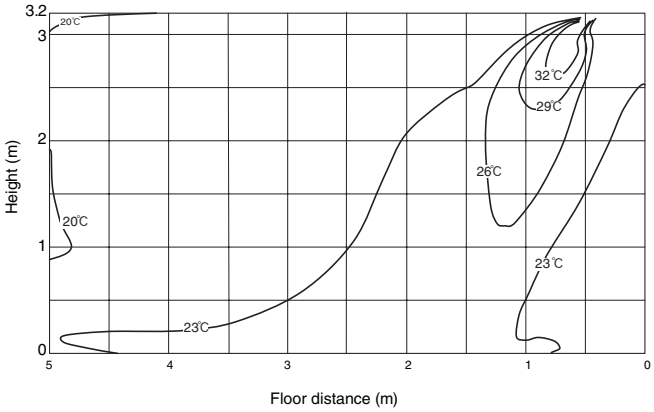

Note : These figures show typical temperature distributions in the conditions above. In the actual installation, they may differ from these figures under the influence of air temperature conditions, ceiling height, cooling/heating load,obstacles,etc.

6-2. Airflow distributions

PLFY-P20-40VCM-E

<Fan mode>
Flow angle 70˚

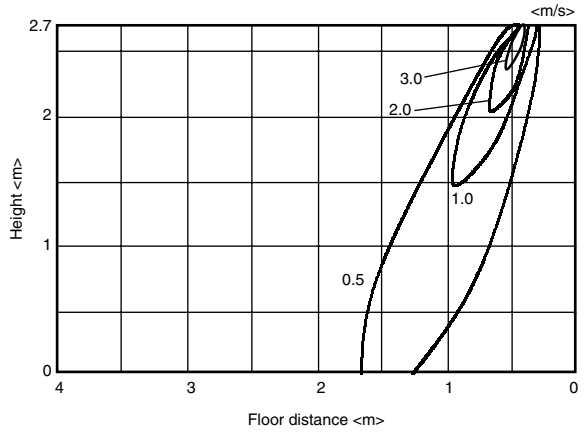

<Fan mode>
Flow angle 30˚

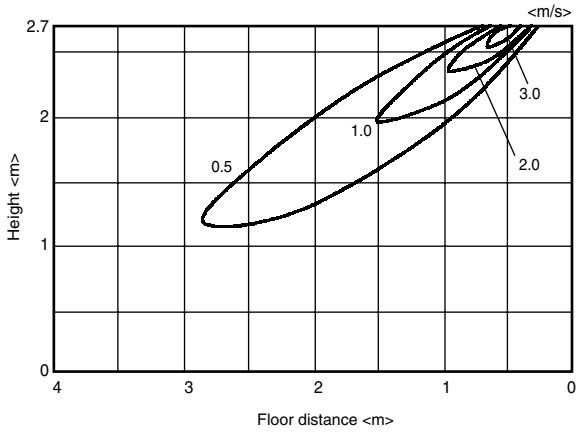

PLFY-P32-80VBM-E

<Heating mode>
Flow angle 60˚

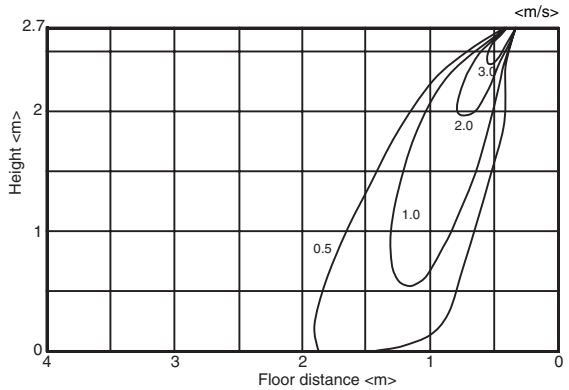

<Cooling mode>
Flow angle 30˚

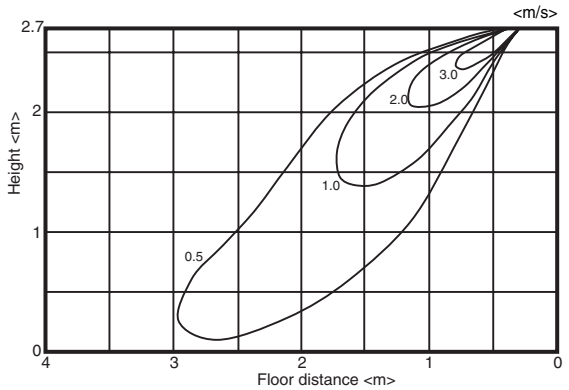

PLFY-P100, 125VBM-E

<Heating mode>
Flow angle 60˚

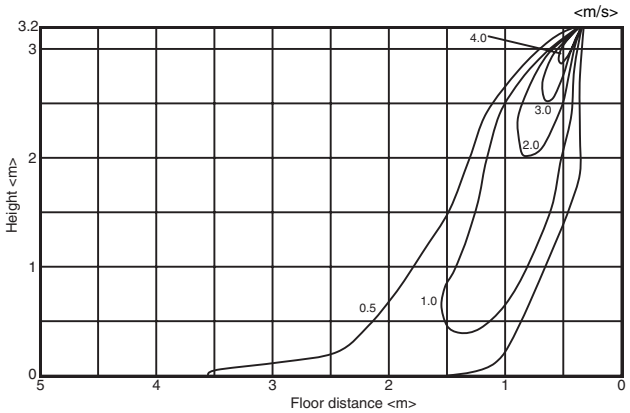

<Cooling mode>
Flow angle 30˚

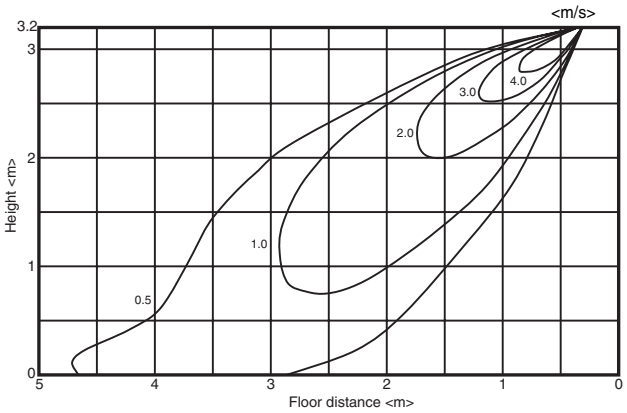

Note : These figures show typical airflow distributions in the conditions above. In the actual installation, they may differ from these figures under the influence of air temperature conditions, ceiling height, cooling/heating load,obstacles,etc.

7. Optional parts for PLFY-P-VBM-E

■ Optional parts line up for the Indoor unit

	Description	Model
PLFY-P-VBM-E	Air outlet shutter plate	PAC-SH51SP-E
	Multi-function casement	PAC-SH53TM-E
	High efficiency filter element	PAC-SH59KF-E
	i-see Sensor corner panel	PAC-SA1ME-E
	Automatic filter elevation panel	PLP-6BAJ
	Wireless signal receiver	PAR-SA9FA-E
	Space panel	PAC-SH48AS-E
	Duct flange for fresh air intake	PAC-SH65OF-E

● PLFY-P-VBM-E

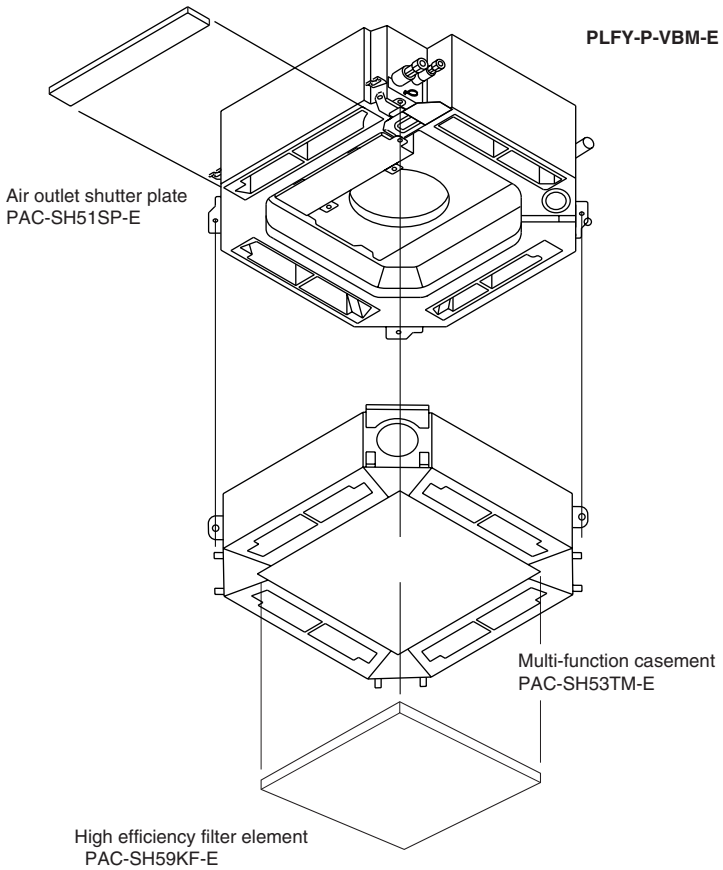

High efficiency filter element
PAC-SH59KF-E
PAC-SH53TM-E is necessary to use with filter PAC-SH59KF-E.

■ Air outlet shutter plate PAC-SH51SP-E

Using the air outlet shutter plate to block the air outlet to modify the air-way from 4 to 3 or 2.
With 1 PAC-SH51SP-E, 4 air-ways can be changed to 3;
With 2 PAC-SH51SP-E, 4 air-ways can be changed to 2;
Changing to 1 way is not allowed.
Material: Foamed polyethylene + foamed urethane, color: black.

Item	① Shutter plate	② Insulator	
Quantity	2	1	
Shape	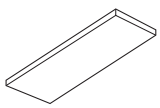	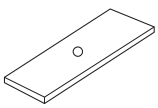	

Detailed installation information should be referred to its Installation Manual (BH79G726H01)

■ High efficiency filter element PAC-SH59KF-E

Life span: 2,500 hr (Dust concentration 0.15mg/m³); Colorimetric method 65% (JIS 11 class)); No re-production.
* The actual dust situation affects the filter life span, which should be considered at the applying site.
Material: Electrostatic polyolefin fiber
High efficiency filter element PAC-SH59KF-E should be used together with the Multi-function casement PAC-SH53TM-E. When using PAC-SH59KF-E, switching on SWC of the Indoor unit address board is needed. Details are referred to its Installation Manual.

Quantity	1	
Shape	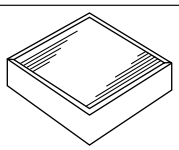	

Detailed installation information should be referred to its Installation Manual (BH79G727H01)

■ Multi-function casement PAC-SH53TM-E

Multi-function casement is used for High efficiency filter element and/or fresh air intake from outdoor.
It should be used with High efficiency filter element PAC-SH59KF-E (Colorimetric method 65%).
Fresh air intake on the Multi-function casement is possible from any 2 or less corners among the 4 ones.
But duct and flange on the casement should be prepare locally.

Item	① Multi-functional casement	② Screw with washer (black)	③ Screw
Quantity	1	4	8
Shape	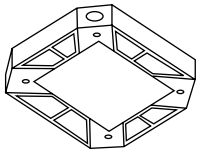	M5X0.8X25	M5X0.8X12
Item	④ Decorative panel securing bracket	⑤ Insulator A for Decorative panel	⑥ Insulator B for Decorative panel
Quantity	4	1	1
Shape	With insulator 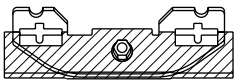	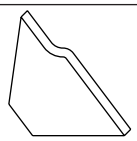	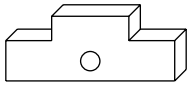

Detailed installation information should be referred to its Installation Manual (RG79Y264H01)

■ i-see sensor corner panel PAC-SA1ME-E

i-see sensor provides comfortable space as it detects the floor temperature to prevent spotty temperature.
And that enables the unit to save energy.
Attention
Make sure that there are no gaps between the unit and the grille, and the grille and ceiling.
※ It way cause dew dripping.

Item	① i-see sensor corner panel	② Plastic fastener	
Quantity	1	2	
Shape			

Detailed installation information should be referred to its Installation Manual (RG79V563H01)

■ Automatic filter elevation panel PLP-6BAJ

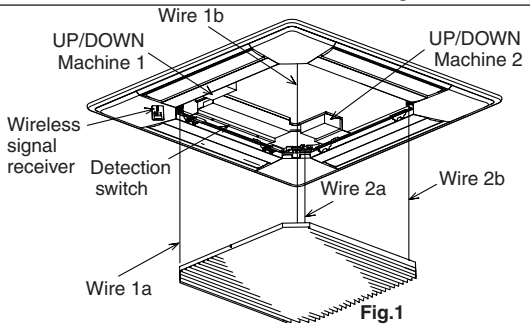

Fig.1

· Air intake grille can be lifted and lowered automatically by wired remote controller (MA type : PAR-21MAA) or wireless remote controller (Item ⑨).
· Lowering the air intake grille allows you to clean the filter easily.
· You can set up eight different stages of lowering distance for the air intake grille according to the set up location if desired. (Maximum : 4m)

Item	① Decorative panel	② Screw with washer	③ Installation gauge	④ Plastic fastener
Quantity	1	4	1	3
Shape	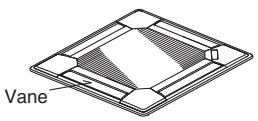 Vane	M5 × 0.8 × 25 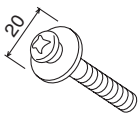 20	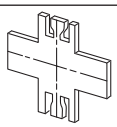 (Used split into four pieces)	
Item	⑤ Tag	⑥ Screw	⑦ Screw	⑧ Screw
Quantity	1	4	1	3
Shape	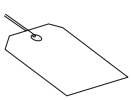	4 × 8 Only three are used	4 × 12	M5 × 10
Item	⑨ Wireless remote controller			
Quantity	1			
Shape				

Detailed installation information should be referred to its Installation Manual (RG79D167K01)

7. Optional parts for PLFY-P-VBM-E

■ Wireless signal receiver PAR-SA9FA-E

Wireless signal receiver PAR-SA9FA-E is necessary for using wireless remote controller PAR-SA9FA-E is a corner panel with the signal receiver for wireless remote controller.		
Item	① Wireless signal receiver	
Quantity	1	
Shape		

Detailed installation information should be referred to its Installation Manual (RG79V531H01)

■ Space panel PAC-SH48AS-E

Decorative cover for the installation when the ceiling height is low.		
Item	① Space panel	② Gauge for installation
Quantity	2	1
Shape	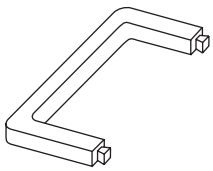	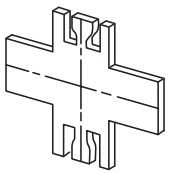

■ Duct flange for fresh air intake PAC-SH65OF-E

Part to attach a duct to take in fresh air from outdoors.			
Item	① Duct flange	② Insulator	③ Screws (M4 x 10)
Quantity	1	1	3
Shape	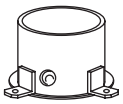	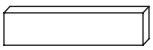	

PCFY-P-VKM-E

1. SPECIFICATIONS ..... 1 - 138
2. EXTERNAL DIMENSIONS ..... 1 - 139
3. CENTER OF GRAVITY ..... 1 - 142
4. ELECTRICAL WIRING DIAGRAMS ..... 1 - 143
5. SOUND LEVELS ..... 1 - 144
   5-1. Sound levels ..... 1 - 144
   5-2. NC curves ..... 1 - 144
6. OA INTAKE-STATIC PRESSURE CURVES ..... 1 - 145
7. TEMPERATURE/AIRFLOW DISTRIBUTIONS ..... 1 - 146
   7-1. Temperature distributions ..... 1 - 146
   7-2. Airflow distributions ..... 1 - 147
8. OPTIONAL PARTS ..... 1 - 148
   8-1. Optional parts line up for the Indoor unit ..... 1 - 148
   8-2. High efficiency filter ..... 1 - 148
   8-3. Drain pump ..... 1 - 148
   8-4. Wireless remote controller kit ..... 1 - 148

Model			PCFY-P40VKM-E	PCFY-P63VKM-E	PCFY-P100VKM-E	PCFY-P125VKM-E
Power source			1-phase 220-240V 50Hz, 1-phase 220V 60Hz	1-phase 220-240V 50Hz, 1-phase 220V 60Hz	1-phase 220-240V 50Hz, 1-phase 220V 60Hz	1-phase 220-240V 50Hz, 1-phase 220V 60Hz
Cooling capacity	*1	kW	4.5	7.1	11.2	14.0
(Nominal)	*1	kcal / h	3,900	6,100	9,600	12,000
	*1	BTU / h	15,400	24,200	38,200	47,800
	*2	kcal / h	4,000	6,300	10,000	12,500
	Power input	kW	0.04	0.05	0.09	0.11
(220V)	Current input	A	0.28	0.33	0.65	0.76
Heating capacity	*3	kW	5.0	8.0	12.5	16.0
(Nominal)	*3	kcal / h	4,300	6,900	10,800	13,800
	*3	BTU / h	17,100	27,300	42,700	54,600
	Power input	kW	0.04	0.05	0.09	0.11
(220V)	Current input	A	0.28	0.33	0.65	0.76
External finish			MUNSELL (6.4Y 8.9/0.4)	MUNSELL (6.4Y 8.9/0.4)	MUNSELL (6.4Y 8.9/0.4)	MUNSELL (6.4Y 8.9/0.4)
External dimension HxWxD		mm	230x960x680	230x1280x680	230x1600x680	230x1600x680
		in.	9-1/16 x 37-13/16 x 26-3/4	9-1/16 x 50-3/8 x 26-3/4	9-1/16 x 63 x 26-3/4	9-1/16 x 63 x 26-3/4
Net weight		kg(lbs)	24(53)	32(71)	36(79)	38(84)
Heat exchanger			Cross fin (Aluminum fin and copper tube)	Cross fin (Aluminum fin and copper tube)	Cross fin (Aluminum fin and copper tube)	Cross fin (Aluminum fin and copper tube)
FAN	Type x Quantity		Sirocco fan x 2	Sirocco fan x 3	Sirocco fan x 4	Sirocco fan x 4
	External static press.	Pa	0	0	0	0
		mmH_2O	0	0	0	0
	Motor Type		DC motor	DC motor	DC motor	DC motor
	Motor output	kW	0.090	0.095	0.160	0.160
	Driving mechanism		Direct-drive	Direct-drive	Direct-drive	Direct-drive
	Air flow rate	m^3 / min	10-11-12-13	14-15-16-18	21-24-26-28	21-24-27-31
	(Low-Mid2-Mid1-High)	L/s	167-183-200-217	233-250-267-300	350-400-433-467	350-400-450-517
		cfm	353-388-424-459	494-530-565-636	742-847-918-989	742-847-953-1095
Sound pressure level (measured in anechoic room)		dB <A>	29-32-34-36	31-33-35-37	36-38-41-43	36-39-42-44
Insulation material			Polyeter sheet	Polyeter sheet	Polyeter sheet	Polyeter sheet
Air filter			PP honeycomb (long life)	PP honeycomb (long life)	PP honeycomb (long life)	PP honeycomb (long life)
Protection device			Fuse	Fuse	Fuse	Fuse
Refrigerant control device			LEV	LEV	LEV	LEV
Connectable outdoor unit			R410A CITY MULTI	R410A CITY MULTI	R410A CITY MULTI	R410A CITY MULTI
Diameter of refrigerant pipe	Liquid (R410A)	mm(in.)	6.35(1/4) Flare	9.52(3/8) Flare	9.52(3/8) Flare	9.52(3/8) Flare
	Gas (R410A)	mm(in.)	12.70(1/2) Flare	15.88(5/8) Flare	15.88(5/8) Flare	15.88(5/8) Flare
Field drain pipe size		mm(in.)	O.D. 26mm(1)	O.D. 26mm(1)	O.D. 26mm(1)	O.D. 26mm(1)
Drawing	External		-	-	-	-
	Wiring		-	-	-	-
	Refrigerant cycle		-	-	-	-
Standard attachment	Document		Installation Manual, Instruction Book	Installation Manual, Instruction Book	Installation Manual, Instruction Book	Installation Manual, Instruction Book
	Accessory		-	-	-	-
Optional parts	Circular duct flange		-	-	-	-
	Drain pump kit		PAC-SH83DM-E	PAC-SH84DM-E	PAC-SH84DM-E	PAC-SH84DM-E
	Square duct flange		-	-	-	-
	Filter box for rear suction		-	-	-	-
	Filter box for bottom suction		-	-	-	-
	Canvas duct for bottom suction		-	-	-	-
	Medium efficiency filter 65%		-	-	-	-
	High efficiency filter		PAC-SH88KF-E	PAC-SH89KF-E	PAC-SH90KF-E	PAC-SH90KF-E
	Maintenance panel with air intake		-	-	-	-
	Wireless remote controller kit		PAR-SL94B-E	PAR-SL94B-E	PAR-SL94B-E	PAR-SL94B-E
Remarks			* Details on foundation work, duct work, insulation work, electrical wiring, power source switch, and other items shall be referred to the Installation Manual.	* Details on foundation work, duct work, insulation work, electrical wiring, power source switch, and other items shall be referred to the Installation Manual.	* Details on foundation work, duct work, insulation work, electrical wiring, power source switch, and other items shall be referred to the Installation Manual.	* Details on foundation work, duct work, insulation work, electrical wiring, power source switch, and other items shall be referred to the Installation Manual.

Notes :	*1 Nominal cooling conditions (subject to JIS B8615-1)	*2 Nominal cooling conditions	*3 Nominal heating conditions (subject to JIS B8615-1)
Indoor :	27degC D.B. / 19degC W.B.	27degC D.B. / 19.5degC W.B.	20degC D.B.
	(81degF D.B. / 66degF W.B.)	(81degF D.B. / 67degF W.B.)	(68degF D.B.)
Outdoor :	35degC D.B.	35degC D.B.	7degC D.B. / 6degC W.B.
	(95degF D.B.)	(95degF D.B.)	(45degF D.B. / 43degF W.B.)
Pipe length :	7.5 m (24-9/16 ft.)	5 m (16-3/8 ft.)	7.5 m (24-9/16 ft.)
Level difference :	0 m (0 ft.)	0 m (0 ft.)	0 m (0 ft.)

Unit converter
kcal/h = kW x 860
BTU/h = kW x 3,412
cfm = m3/min x 35.31
lbs = kg / 0.4536
*The specification data is subject to rounding variation.

Ref.: Spec_PCFY-P40-125VKM-E

PCFY

PCFY-P40VKM-E

Unit : mm

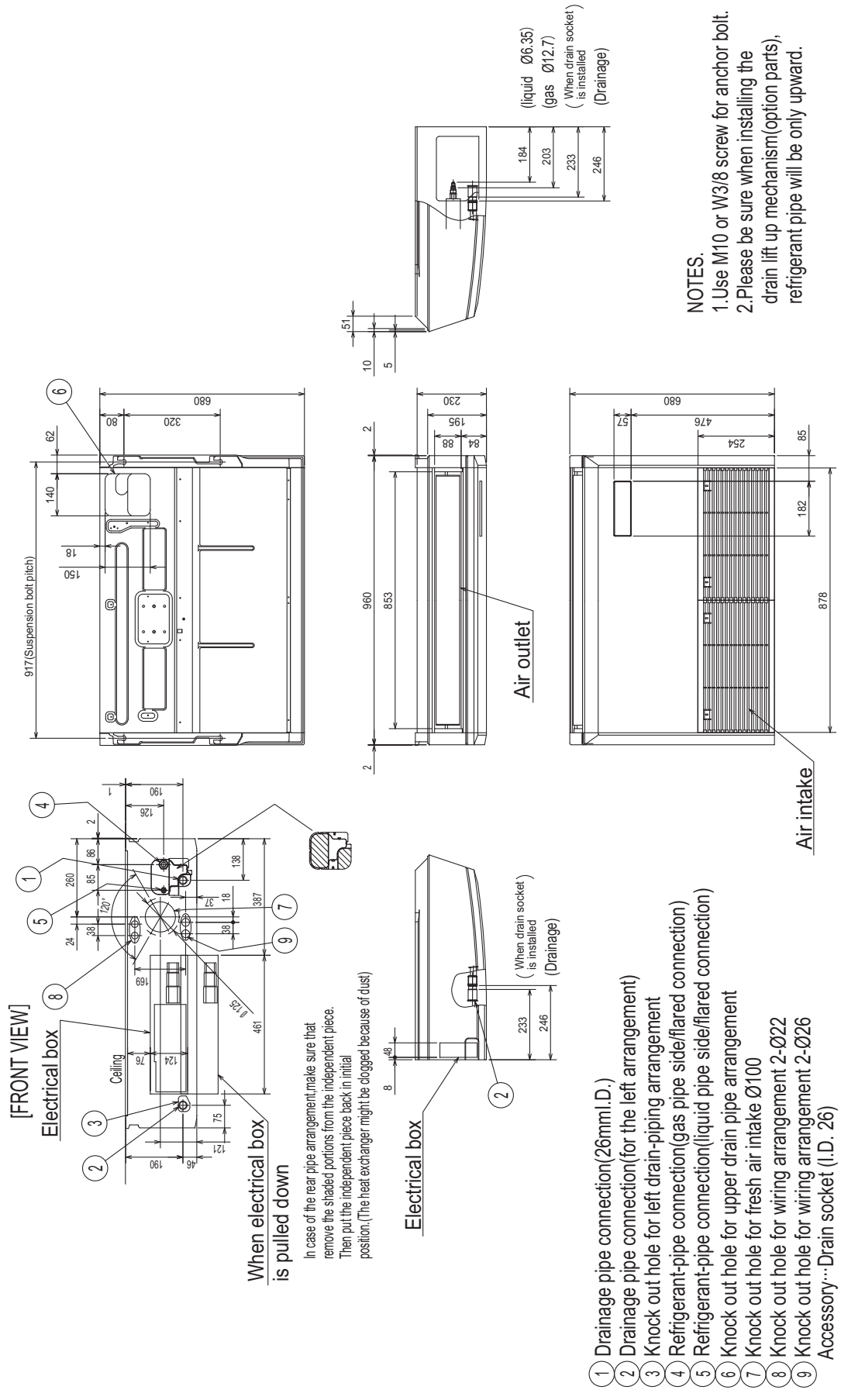

PCFY

2. EXTERNAL DIMENSIONS

PCFY-P63VKM-E

Unit : mm

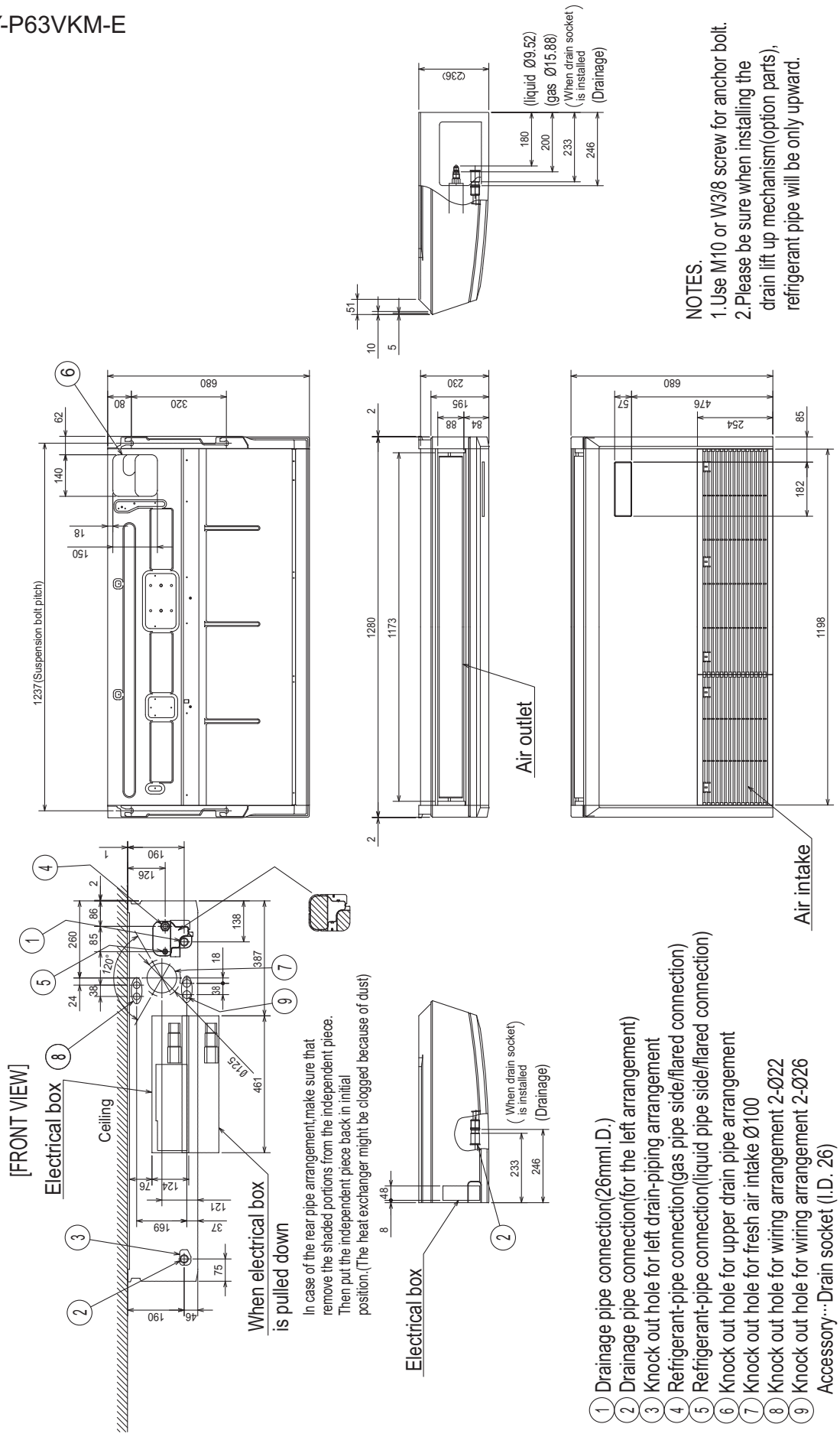

PCFY

2. EXTERNAL DIMENSIONS

PCFY-P100,125VKM-E

Unit : mm

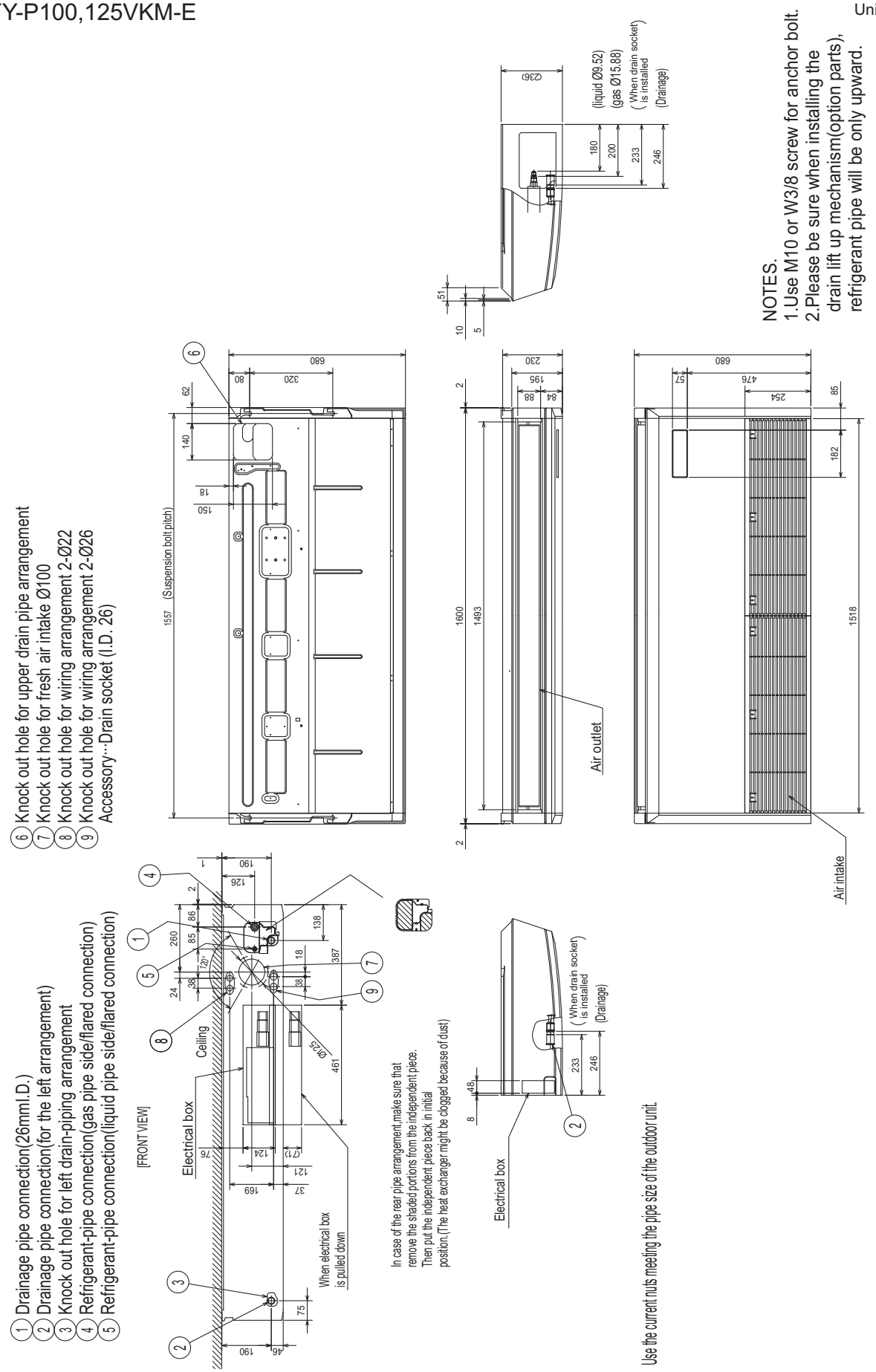

PCFY

PCFY-P40,63,100,125VKM-E

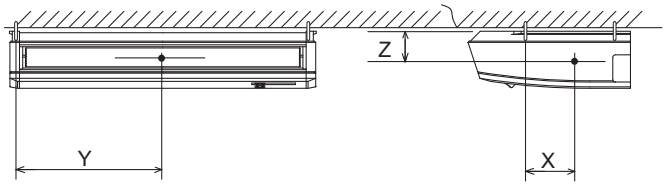

Model name	X	Y	Z
PCFY-P40VKM-E	110	450	115
PCFY-P63VKM-E	110	610	115
PCFY-P100VKM-E	110	770	115
PCFY-P125VKM-E	110	770	115

PCFY-P40, 63, 100, 125VKM-E

SYMBOL		NAME	
I. B		INDOOR CONTROLLER BOARD	
	CN27	CONNECTOR	DAMPER
	CN32		REMOTE SWITCH
	CN51		CENTRALLY CONTROL
	CN52		REMOTE INDICATION
	DSA	SURGE ABSORBER	
	FUSE	FUSE (T6.3AL250V)	
	SW2	SWITCH	CAPACITY CODE
	SW3		MODE SELECTION
	SW4		MODEL SELECTION
	SWE		DRAIN LIFT UP MECHANISM(TEST MODE)
	X1	AUX. RELAY	DRAIN LIFT UP MECHANISM(OPTIONAL PARTS)
	ZNR01,02	VARISTOR	
LEV		LINEAR EXPANSION VALVE	
DCL		REACTOR	
MF		FAN MOTOR	
MV		VANE MOTOR	
TB2		TERMINAL BLOCK	POWER SUPPLY
TB5			TRANSMISSION
TB15			MA-REMOTE CONTROLLER
TH21		THERMISTOR	ROOM TEMP. DETECTION (0°C / 15kΩ, 25°C / 5.4kΩ)

SYMBOL		NAME	
TH22		THERMISTOR	PIPE TEMP. DETECTION / LIQUID (0°C / 15kΩ, 25°C / 5.4kΩ)
TH23			PIPE TEMP. DETECTION / GAS (0°C / 15kΩ, 25°C / 5.4kΩ)
A. B		ADDRESS BOARD	
	SWA	SWITCH	CEILING HEIGHT SELECTOR
	SWC		OPTION SELECTOR
	SW1		MODE SELECTION
	SW11		ADDRESS SETTING 1s DIGIT
	SW12		ADDRESS SETTING 10ths DIGIT
	SW14		BRANCH No.
OPTIONAL PARTS			
W.B		PCB FOR WIRELESS REMOTE CONTROLLER	
	BZ	BUZZER	
	LED1	LED (OPERATION INDICATION : GREEN)	
	LED2	LED (PREPARATION FOR HEATING : ORANGE)	
	RU	RECEVING UNIT	
	SW1	EMERGENCY OPERATION (HEAT / DOWN)	
	SW2	EMERGENCY OPERATION (COOL / UP)	
DP		DRAIN LIFT UP MECHANISM	
	FS	DRAIN FLOAT SWITCH	

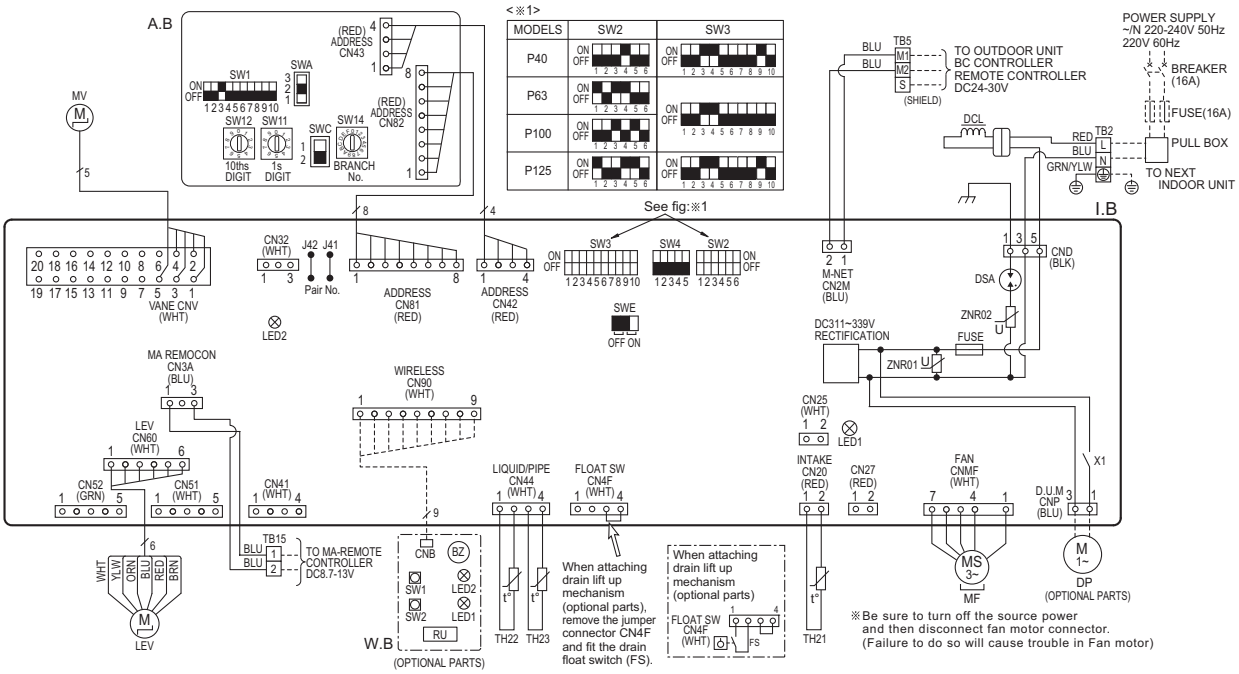

LED on indoor board for service

Mark	Meaning	Function
LED1	Main power supply	Main power supply (Indoor unit:220-240V) Power on → lamp is lit
LED2	Power supply for MA-Remote controller	Power supply for MA-Remote controller on → lamp is lit

NOTES:
1.At servicing for outdoor unit,always follow the wiring diagram of outdoor unit.
2.In case of using MA-Remote controller, please connect to TB15.
(Remote controller wire is non-polar.)
3.In case of using M-NET, please connect to TB5. (Transmission line is non-polar.)
4.Symbol [S] of TB5 is the shield wire connection.
5.Symbols used in wiring diagram above are, ▭▭▭: terminal block, ▭○○○▭:connecter.
6.The setting of the SW2 dip switches differs in the capacity. for the detail, refer to the fig:※1.

PCFY

5. SOUND LEVELS

5-1. Sound levels

Ceiling suspended

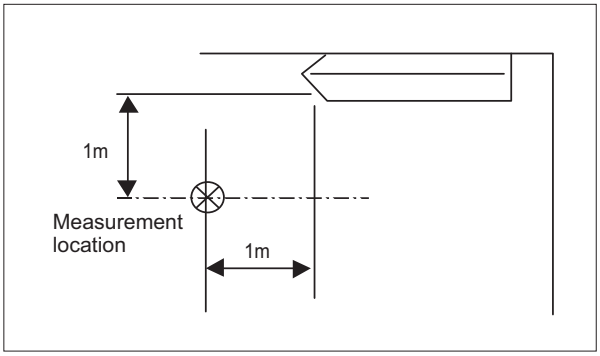

Sound level at anechoic room : Low-Middle2-Middle1-High

Model	Sound level dB (A)
PCFY-P40VKM-E	29-32-34-36
PCFY-P63VKM-E	31-33-35-37
PCFY-P100VKM-E	36-38-41-43
PCFY-P125VKM-E	36-39-42-44

* Measured in anechoic room.

5-2. NC curves

PCFY-P40VKM

External Static Pressure: 30Pa
Power Source: 200V, 50/60Hz

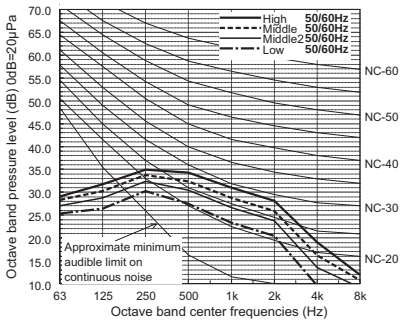

PCFY-P63VKM

External Static Pressure: 30Pa
Power Source: 200V 50/60Hz

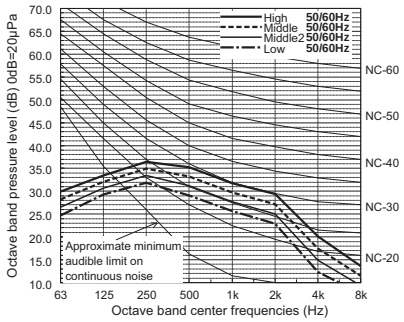

PCFY-P100VKM

External Static Pressure: 30Pa
Power Source: 200V 50/60Hz

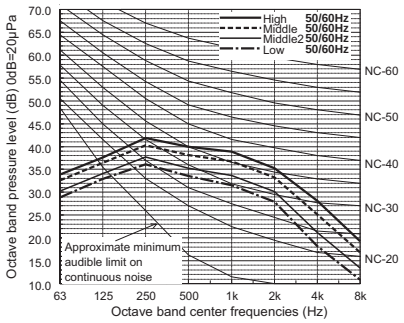

PCFY-P125VKM

External Static Pressure: 30Pa
Power Source: 200V 50/60Hz

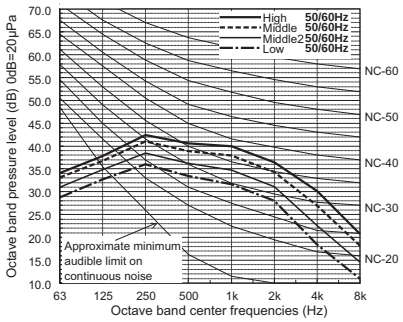

PCFY

■ PCFY-P40VKM-E

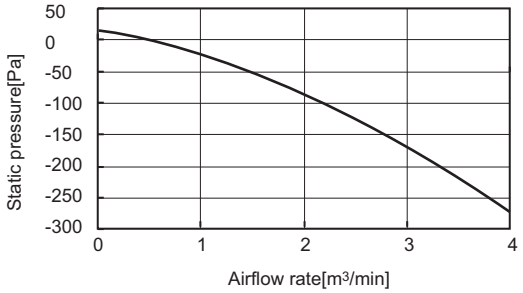

■ PCFY-P63VKM-E

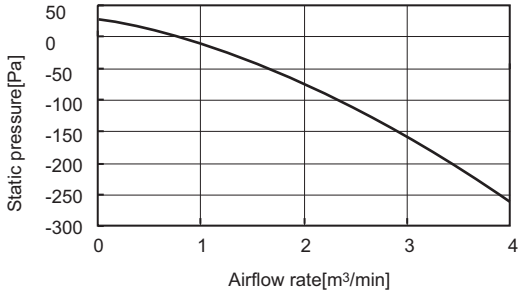

■ PCFY-P100, 125VKM-E

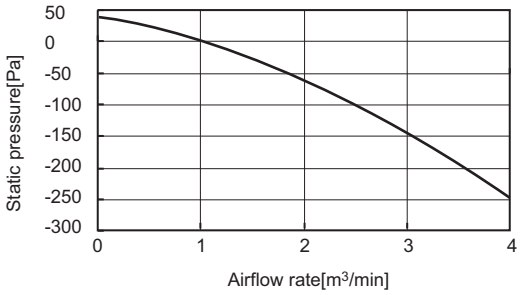

PCFY

7. TEMPERATURE/AIRFLOW DISTRIBUTIONS

7-1. Temperature distributions

Temperature distributions
PCFY-P40, 63VKM-E

<Cooling mode>
Flow angle : 10˚
Temperature setting : 27˚C
High notch

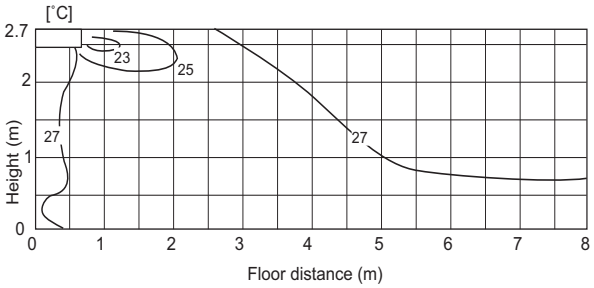

<Heating mode>
Flow angle : 60˚
Temperature setting : 20˚C
High notch

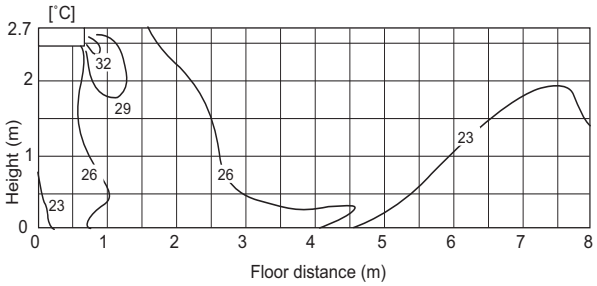

PCFY-P100, 125VKM-E

<Cooling mode>
Flow angle : 10˚
Temperature setting : 27˚C
High notch

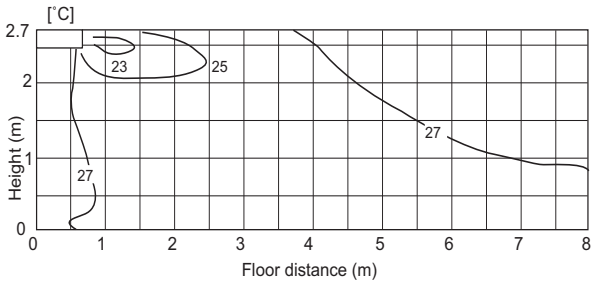

<Heating mode>
Flow angle : 60˚
Temperature setting : 20˚C
High notch

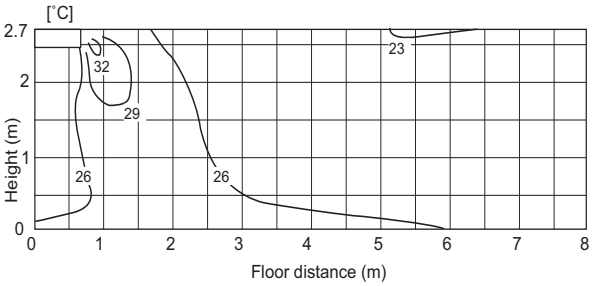

Note : These figures show typical airflow distributions in the conditions above. In the actual installation, they may differ from these figures under the influence of air temperature conditions, ceiling height, cooling/heating load,obstacles,etc.

7-2. Airflow distributions

Airflow distributions
PCFY-P40, 63VKM-E

<Cooling mode>
Flow angle : 10˚
Temperature setting : 27˚C
High notch
Ceiling height : 2.7m

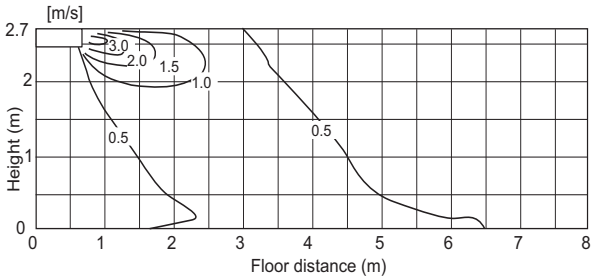

<Heating mode>
Flow angle : 60˚
Temperature setting : 27˚C
High notch
Ceiling height : 2.7m

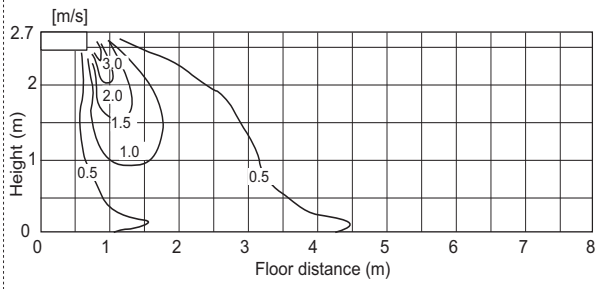

PCFY-P100, 125VKM-E

<Fan mode>
Flow angle : 10˚
Temperature setting : 27˚C
High notch
Ceiling height : 2.7m

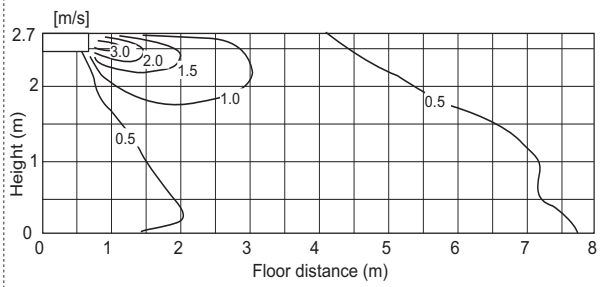

<Fan mode>
Flow angle : 60˚
Temperature setting : 27˚C
High notch
Ceiling height : 2.7m

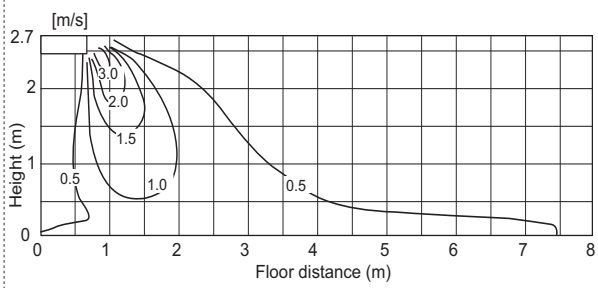

Note : These figures show typical airflow distributions in the conditions above. In the actual installation, they may differ from these figures under the influence of air temperature conditions, ceiling height, cooling/heating load,obstacles,etc.

PCFY

8. OPTIONAL PARTS

8-1. Optional parts line up for the Indoor unit

	High-efficiency filter	Wireless remote controller kit	Drain pump
PCFY-P40VKM-E	PAC-SH88KF-E	PAR-SL94B-E	PAC-SH83DM-E
PCFY-P63VKM-E	PAC-SH89KF-E	PAR-SL94B-E	PAC-SH84DM-E
PCFY-P100,125VKM-E	PAC-SH90KF-E	PAR-SL94B-E	PAC-SH84DM-E

8-2. High efficiency filter

Material: PP honeycomb
Gravimetric method: 70%

Item	PAC-SH88KF-E	PAC-SH89KF-E	PAC-SH90KF-E
Quantity	2 (Small)	1 (Small), 2 (Large)	2 (Large)
Shape	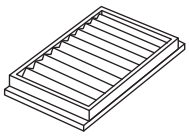		

8-3. Drain pump

If drain water can not flow out the Indoor unit by gravity and gradient, a Drain-pump for draining is needed.
Drain pump PAC-SH-DM-E can pump water up to 600 mm high from the ceiling.

Item	① Drain lift up mechanism	② Attachment	③ Screws (4×10)	④ VP-20 pipe	⑤ Pipe cover
Quantity	1	1	6	1	1
Shape	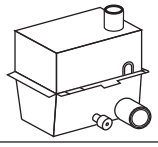	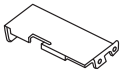 1 Drain lift up mechanism fixture	For the installation of drain lift up mechanism 1		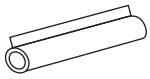 For insulation of VP20 pipe4
Item	⑥ Flexible hose	⑦ Fastener	⑧ L-shaped pipe (gas pipe)	⑨ L-shaped pipe (liquid pipe)	⑩ Insulator A
Quantity	1	1	1	1	2
Shape	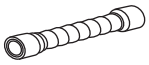		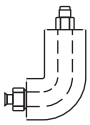		6t×220×80 (For internal insulation) For the insulation of L-shaped pipes ⑧ and ⑨ and the refrigerant pipes.
Item	⑪ Insulator B				
Quantity	2				
Shape	3t×250×120 (For external insulation) 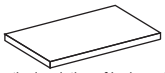 For the insulation of L-shaped pipes ⑧ and ⑨ and the refrigerant pipes.				

Detailed installation information should be referred to its Installation Manual (RG79V973H01).

8-4. Wireless remote controller kit

Wireless remote controller receiver is built-in type.

Item	① Wireless remote controller receiver	② Wireless remote controller	③ Remote control holder	④ "AAA" LR3 alkanine batterise	⑤ 4.1 x 16 wood screw
Quantity	1	1	1	2	2
Item	⑥ Cord rataining clips	⑦ Connection cord fixing seal (12x30 size)			
Quantity	2	1			

Detailed installation information should be referred to its Installation Manual (RG79V995H01).

PCFY

PKFY-P-VBM-E, VHM-E, VKM-E

1. SPECIFICATIONS ..... 1 - 150
2. EXTERNAL DIMENSIONS ..... 1 - 152
3. CENTER OF GRAVITY ..... 1 - 155
4. ELECTRICAL WIRING DIAGRAMS ..... 1 - 156
5. SOUND LEVELS ..... 1 - 159
   5-1. Sound levels ..... 1 - 159
   5-2. NC curves ..... 1 - 159
6. TEMPERATURE/AIRFLOW DISTRIBUTIONS ..... 1 - 160
   6-1. Temperature distributions ..... 1 - 160
   6-2. Airflow distributions ..... 1 - 161
7. OPTIONAL PARTS ..... 1 - 162

1. SPECIFICATIONS

Model			PKFY-P15VBM-E	PKFY-P20VBM-E	PKFY-P25VBM-E	PKFY-P32VHM-E
Power source			1-phase 220-240V 50Hz, 1-phase 220V 60Hz	1-phase 220-240V 50Hz, 1-phase 220V 60Hz	1-phase 220-240V 50Hz, 1-phase 220V 60Hz	1-phase 220-240V 50Hz, 1-phase 220V 60Hz
Cooling capacity	*1	kW	1.7	2.2	2.8	3.6
(Nominal)	*1	kcal / h	1,450	1,900	2,400	3,100
	*1	BTU / h	5,800	7,500	9,600	12,300
	*2	kcal / h	1,500	2,000	2,500	3,150
Power input	*4	kW	0.04	0.04	0.04	0.04
(220V) Current input	*4	A	0.20	0.20	0.20	0.40
Heating capacity	*3	kW	1.9	2.5	3.2	4.0
(Nominal)	*3	kcal / h	1,600	2,200	2,800	3,400
	*3	BTU / h	6,500	8,500	10,900	13,600
Power input		kW	0.04	0.04	0.04	0.03
(220V) Current input		A	0.20	0.20	0.20	0.30
External finish			Plastic, MUNSELL (1.0Y 9.2/0.2)	Plastic, MUNSELL (1.0Y 9.2/0.2)	Plastic, MUNSELL (1.0Y 9.2/0.2)	Plastic, MUNSELL (1.0Y 9.2/0.2)
External dimension HxWxD		mm	295x815x225	295x815x225	295x815x225	295x898x249
		in.	11-5/8 x 32-1/8 x 8-7/8	11-5/8 x 32-1/8 x 8-7/8	11-5/8 x 32-1/8 x 8-7/8	11-5/8 x 35-3/8 x 9-13/16
Net weight		kg(lbs)	10 (23)	10 (23)	10 (23)	13(29)
Heat exchanger			Cross fin (Aluminum fin and copper tube)	Cross fin (Aluminum fin and copper tube)	Cross fin (Aluminum fin and copper tube)	Cross fin (Aluminum fin and copper tube)
FAN	Type x Quantity		Line flow fan x 1	Line flow fan x 1	Line flow fan x 1	Line flow fan x 1
	External static press.	Pa	0	0	0	0
		mmH_2O	0	0	0	0
	Motor Type		1-phase induction motor	1-phase induction motor	1-phase induction motor	DC motor
	Motor output	kW	0.017	0.017	0.017	0.030
	Driving mechanism		Direct-driven by motor	Direct-driven by motor	Direct-driven by motor	Direct-drive
	Airflow rate	m^3 / min	4.9-5.0-5.2-5.3	4.9-5.2-5.6-5.9	4.9-5.2-5.6-5.9	9-10-11
	(Low-Mid2-Mid-High)	L/s	82-83-87-88	82-87-93-98	82-87-93-98	150-167-183
		cfm	173-177-184-187	173-184-198-208	173-184-198-208	318-353-388
Sound pressure level (measured in anechoic room)		dB <A>	29-31-32-33	29-31-34-36	29-31-34-36	34-37-41
Insulation material			Polyethylene sheet	Polyethylene sheet	Polyethylene sheet	Polyethylene sheet
Air filter			PP honeycomb	PP honeycomb	PP honeycomb	PP honeycomb
Protection device			Fuse	Fuse	Fuse	Fuse
Refrigerant control device			LEV	LEV	LEV	LEV
Connectable outdoor unit			R410A CITY MULTI	R410A CITY MULTI	R410A CITY MULTI	R410A CITY MULTI
Diameter of refrigerant pipe	Liquid (R410A)	mm(in.)	6.35(1/4) Flare	6.35(1/4) Flare	6.35(1/4) Flare	6.35(1/4) Flare
	Gas (R410A)	mm(in.)	12.70(1/2) Flare	12.70(1/2) Flare	12.70(1/2) Flare	12.70(1/2) Flare
Field drain pipe size		mm(in.)	I.D. 16(5/8)	I.D. 16(5/8)	I.D. 16(5/8)	I.D. 16(5/8)
Drawing	External		-	-	-	-
	Wiring		-	-	-	-
	Refrigerant cycle		-	-	-	-
Standard attachment	Document		Installation Manual, Instruction Book	Installation Manual, Instruction Book	Installation Manual, Instruction Book	Installation Manual, Instruction Book
	Accessory		-	-	-	-
Optional parts	External LEV Box		PAC-SG95LE-E	PAC-SG95LE-E	PAC-SG95LE-E	-
	Drain pump		-	-	-	PAC-SH75DM-E
Remarks			* Details on foundation work, duct work, insulation work, electrical wiring, power source switch, and other items shall be referred to the Installation Manual. * Due to continuing improvement, above specification may be subject to change without notice.			

Notes :	*1 Nominal cooling conditions (subject to JIS B8615-1)	*2 Nominal cooling conditions	*3 Nominal heating conditions (subject to JIS B8615-1)	Unit converter
Indoor :	27degC D.B. / 19degC W.B.	27degC D.B. / 19.5degC W.B.	20degC D.B.	kcal/h = kW x 860
	(81degF D.B. / 66degF W.B.)	(81degF D.B. / 67degF W.B.)	(68degF D.B.)	BTU/h = kW x 3,412
Outdoor :	35degC D.B.	35degC D.B.	7degC D.B. / 6degC W.B.	cfm = m3/min x 35.31
	(95degF D.B.)	(95degF D.B.)	(45degF D.B. / 43degF W.B.)	lbs = kg / 0.4536
Pipe length :	7.5 m (24-9/16 ft.)	5 m (16-3/8 ft.)	7.5 m (24-9/16 ft.)	
Level difference :	0 m (0 ft.)	0 m (0 ft.)	0 m (0 ft.)	*The specification data is subject to rounding variation.
*4 Electrical characteristic of cooling are included optional drain-pump. (Applicable only to PKFY-P32VHM-E)				

PKFY

1. SPECIFICATIONS

Model				PKFY-P40VHM-E	PKFY-P50VHM-E	PKFY-P63VKM-E	PKFY-P100VKM-E
Power source				1-phase 220-240V 50Hz, 1-phase 220V 60Hz	1-phase 220-240V 50Hz, 1-phase 220V 60Hz	1-phase 220-240V 50Hz, 1-phase 220V 60Hz	1-phase 220-240V 50Hz, 1-phase 220V 60Hz
Cooling capacity		*1	kW	4.5	5.6	7.1	11.2
(Nominal)		*1	kcal / h	3,900	4,800	6,100	9,600
		*1	BTU / h	15,400	19,100	24,200	38,200
		*2	kcal / h	4,000	5,000	6,300	10,000
	Power input	*4	kW	0.04	0.04	0.05	0.08
(220V)	Current input	*4	A	0.40	0.40	0.37	0.58
Heating capacity		*3	kW	5.0	6.3	8.0	12.5
(Nominal)		*3	kcal / h	4,300	5,400	6,900	10,800
		*3	BTU / h	17,100	21,500	27,300	42,600
	Power input		kW	0.03	0.03	0.04	0.07
(220V)	Current input		A	0.30	0.30	0.30	0.51
External finish				Plastic, MUNSELL (1.0Y 9.2/0.2)	Plastic, MUNSELL (1.0Y 9.2/0.2)	Plastic, MUNSELL (1.0Y 9.2/0.2)	Plastic, MUNSELL (1.0Y 9.2/0.2)
External dimension HxWxD			mm	295x898x249	295x898x249	365x1170x295	365x1170x295
			in.	11-5/8 x 35-3/8 x 9-13/16	11-5/8 x 35-3/8 x 9-13/16	14-3/8 x 46-1/16 x 11-5/8	14-3/8 x 46-1/16 x 11-5/8
Net weight			kg(lbs)	13(29)	13(29)	21(46)	21(46)
Heat exchanger				Cross fin (Aluminum fin and copper tube)	Cross fin (Aluminum fin and copper tube)	Cross fin (Aluminum fin and copper tube)	Cross fin (Aluminum fin and copper tube)
FAN	Type x Quantity			Line flow fan x 1	Line flow fan x 1	Line flow fan x 1	Line flow fan x 1
	External static press.		Pa	0	0	0	0
			mmH_2O	0	0	0	0
	Motor Type			DC motor	DC motor	DC motor	DC motor
	Motor output		kW	0.030	0.030	0.056	0.056
	Driving mechanism			Direct-drive	Direct-drive	Direct-drive	Direct-drive
	Airflow rate		m^3 / min	9-10.5-11.5	9-10.5-12	16-20	20-26
	(Low-Mid-High)		L/s	150-175-192	150-175-200	267-333	333-433
			cfm	318-371-406	318-371-424	565-706	706-918
Sound pressure level (measured in anechoic room)			dB <A>	34-38-41	34-39-43	39-45	41-49
Insulation material				Polyethylene sheet	Polyethylene sheet	Polyethylene sheet	Polyethylene sheet
Air filter				PP honeycomb	PP honeycomb	PP honeycomb	PP honeycomb
Protection device				Fuse	Fuse	Fuse	Fuse
Refrigerant control device				LEV	LEV	LEV	LEV
Connectable outdoor unit				R410A CITY MULTI	R410A CITY MULTI	R410A CITY MULTI	R410A CITY MULTI
Diameter of refrigerant pipe	Liquid (R410A)		mm(in.)	6.35(1/4) Flare	6.35(1/4) Flare	9.52(3/8) Flare	9.52(3/8) Flare
	Gas (R410A)		mm(in.)	12.70(1/2) Flare	12.70(1/2) Flare	15.88(5/8) Flare	15.88(5/8) Flare
Field drain pipe size			mm(in.)	I.D. 16(5/8)	I.D. 16(5/8)	I.D. 16(5/8)	I.D. 16(5/8)
Drawing	External			-	-	-	-
	Wiring			-	-	-	-
	Refrigerant cycle			-	-	-	-
Standard attachment	Document			Installation Manual, Instruction Book	Installation Manual, Instruction Book	Installation Manual, Instruction Book	Installation Manual, Instruction Book
	Accessory			-	-	-	-
Optional parts	External LEV Box			-	-	-	-
	Drain pump			PAC-SH75DM-E	PAC-SH75DM-E	PAC-SH94DM-E	PAC-SH94DM-E
Remarks				* Details on foundation work, duct work, insulation work, electrical wiring, power source switch, and other items shall be referred to the Installation Manual. * Due to continuing improvement, above specification may be subject to change without notice.			

Notes :	*1 Nominal cooling conditions (subject to JIS B8615-1)	*2 Nominal cooling conditions	*3 Nominal heating conditions (subject to JIS B8615-1)	Unit converter
Indoor :	27degC D.B. / 19degC W.B.	27degC D.B. / 19.5degC W.B.	20degC D.B.	kcal/h = kW x 860
	(81degF D.B. / 66degF W.B.)	(81degF D.B. / 67degF W.B.)	(68degF D.B.)	BTU/h = kW x 3,412
Outdoor :	35degC D.B.	35degC D.B.	7degC D.B. / 6degC W.B.	cfm = m3/min x 35.31
	(95degF D.B.)	(95degF D.B.)	(45degF D.B. / 43degF W.B.)	lbs = kg / 0.4536
Pipe length :	7.5 m (24-9/16 ft.)	5 m (16-3/8 ft.)	7.5 m (24-9/16 ft.)	
Level difference :	0 m (0 ft.)	0 m (0 ft.)	0 m (0 ft.)	*The specification data is subject to rounding variation.
*4 Electrical characteristic of cooling are included optional drain-pump.				

PKFY

PKFY-P15, 20, 25VBM-E

Unit : mm

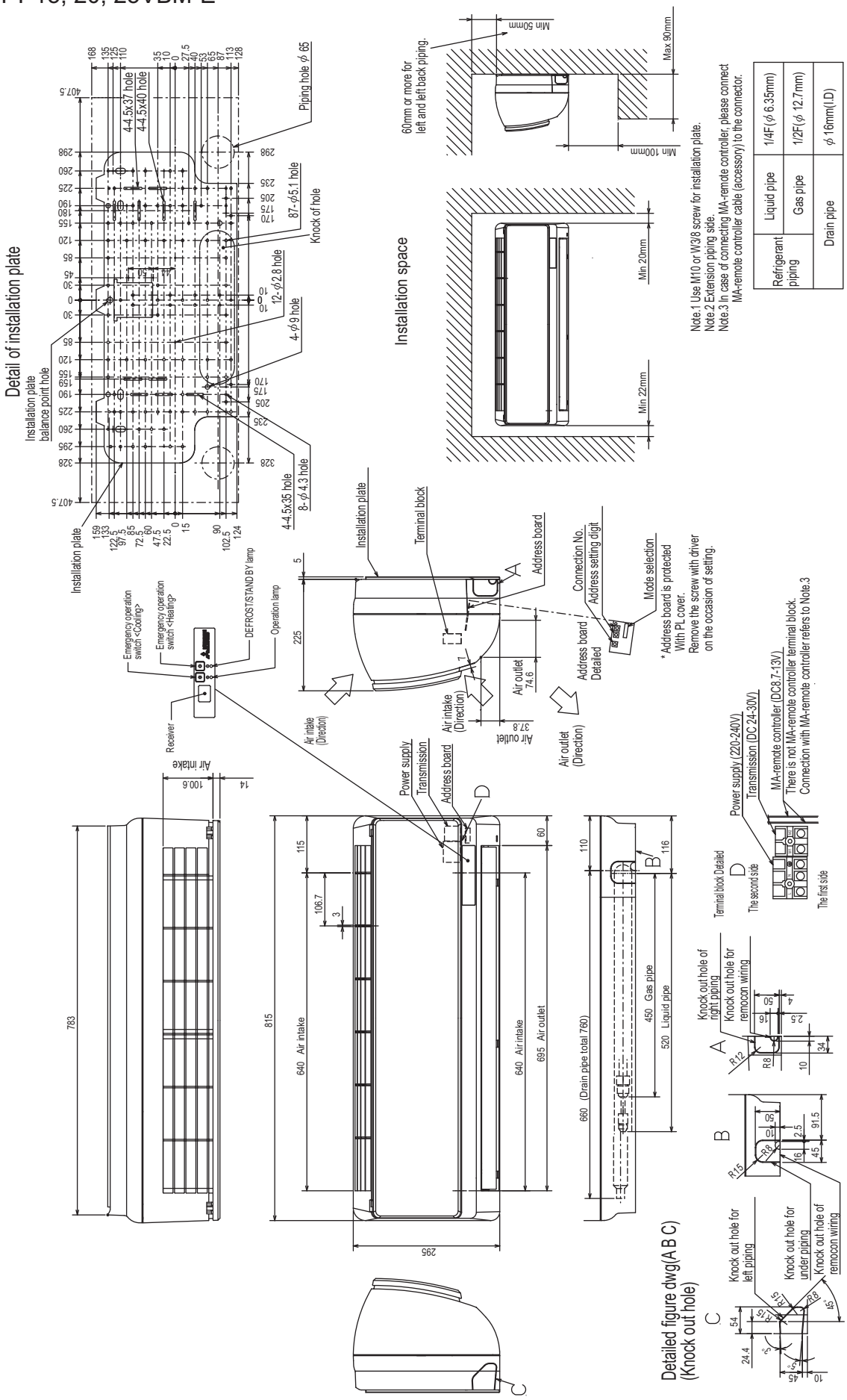

PKFY

2. EXTERNAL DIMENSIONS

PKFY-P32, 40, 50VHM-E

Unit : mm

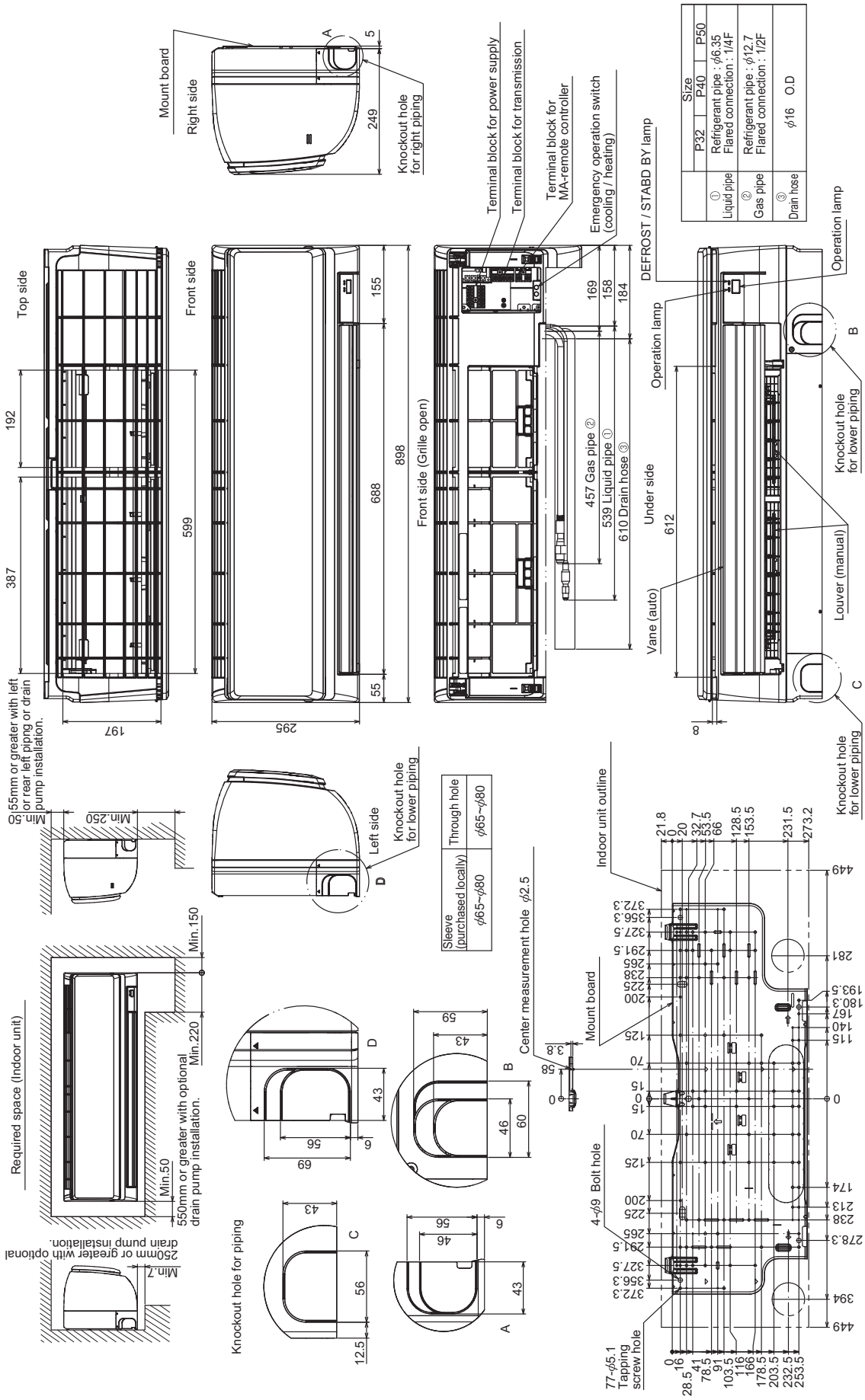

PKFY-P63, 100VKM-E

Unit : mm

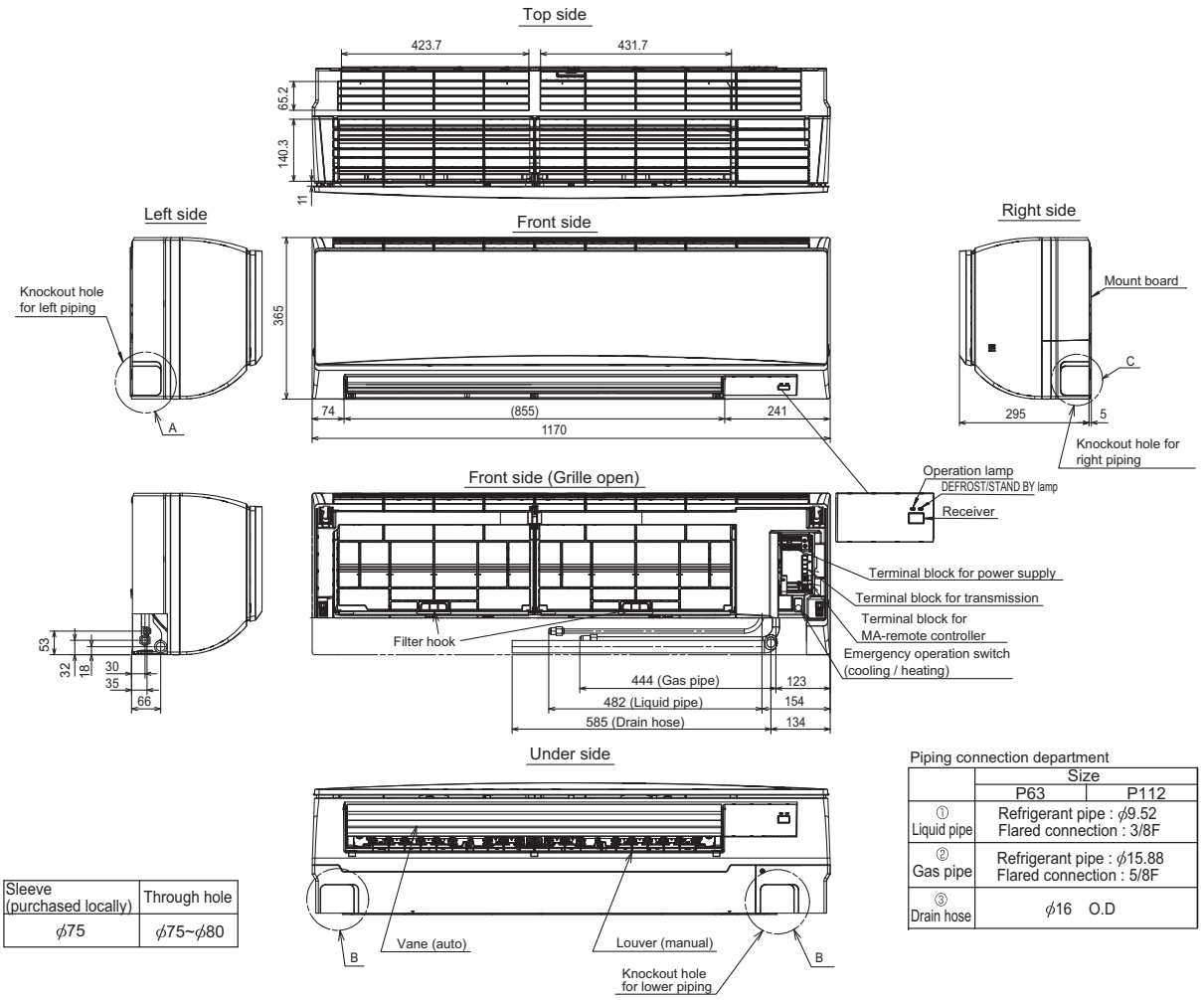

Sleeve (purchased locally)	Through hole
ϕ75	ϕ75~ϕ80

Piping connection department

	Size	
	P63	P112
① Liquid pipe	Refrigerant pipe : ϕ9.52 Flared connection : 3/8F	
② Gas pipe	Refrigerant pipe : ϕ15.88 Flared connection : 5/8F	
③ Drain hose	ϕ16 O.D	

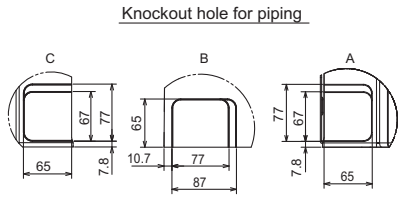

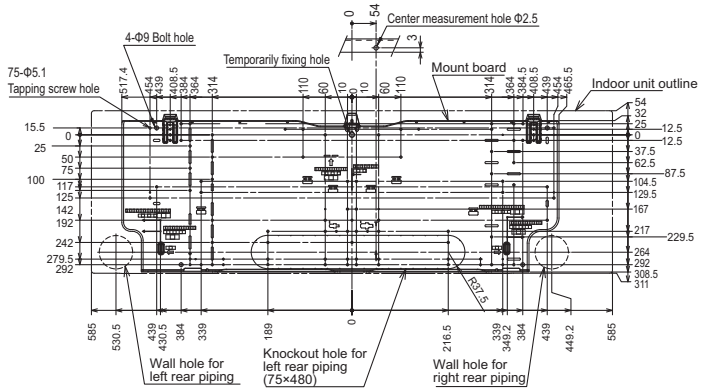

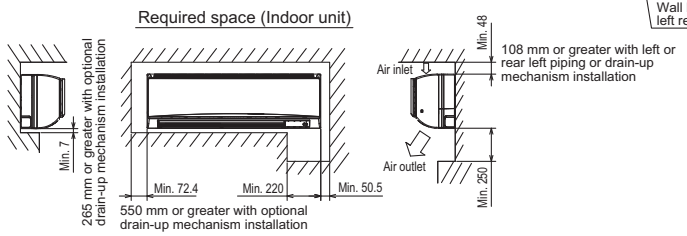

3. CENTER OF GRAVITY

PKFY-P-VBM-E, VHM-E, VKM-E

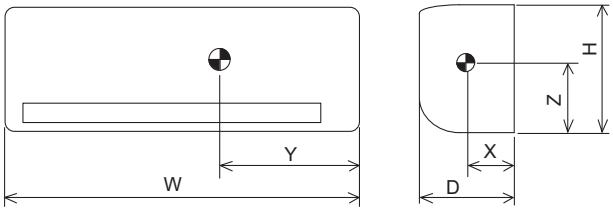

Model	W	D	H	X	Y	Z
PKFY-P15VBM-E	815	225	295	120	300	150
PKFY-P20VBM-E	815	225	295	120	300	150
PKFY-P25VBM-E	815	225	295	120	300	150
PKFY-P32VHM-E	898	249	295	120	390	160
PKFY-P40VHM-E	898	249	295	120	390	160
PKFY-P50VHM-E	898	249	295	120	390	160
PKFY-P63VKM-E	1170	295	365	190	460	190
PKFY-P100VKM-E	1170	295	365	190	460	190

PKFY-P15, 20, 25VBM-E

Legend

Symbol		Name		Symbol	Name		Symbol		Name	
I.B		Indoor controller board		MV	Vane motor			SW5	Switch	Voltage selection
	CN32	Connector	Remote switch	LEV	Linear expansion valve			SW11		Address setting 1s digit
	CN51		Centrally control	TB2	Terminal block	Power supply		SW12		Address setting 10ths digit
	CN52		Remote indication	TB5		Transmission		SW14		Connection No.
	SW2	Switch	Capacity code	TH21	Thermistor	Room temp.detection	W.B		Wireless remote controller board	
	SW3		Mode selection			(0°C/15kΩ,25°C/5.4kΩ)		RU	Receving unit	
P.B		Indoor power board		TH22		Pipe temp.detection/Liquid		BZ	Buzzer	
	ZNR	Varistor				(0°C/15kΩ,25°C/5.4kΩ)		LED1	LED(Operation indicator:Green)	
	FUSE	Fuse (T6.3AL 250V)		TH23		Pipe temp.detection/Gas		LED2	LED(Preparation for heating:Orange)	
	F.C	Fan phase control				(0°C/15kΩ,25°C/5.4kΩ)		SW1	Emergency operation (Heat)	
	C1	Capacitor (Fan motor)		A.B	Address board			SW2	Emergency operation (Cool)	
MF		Fan motor			SW1	Switch Mode selection				

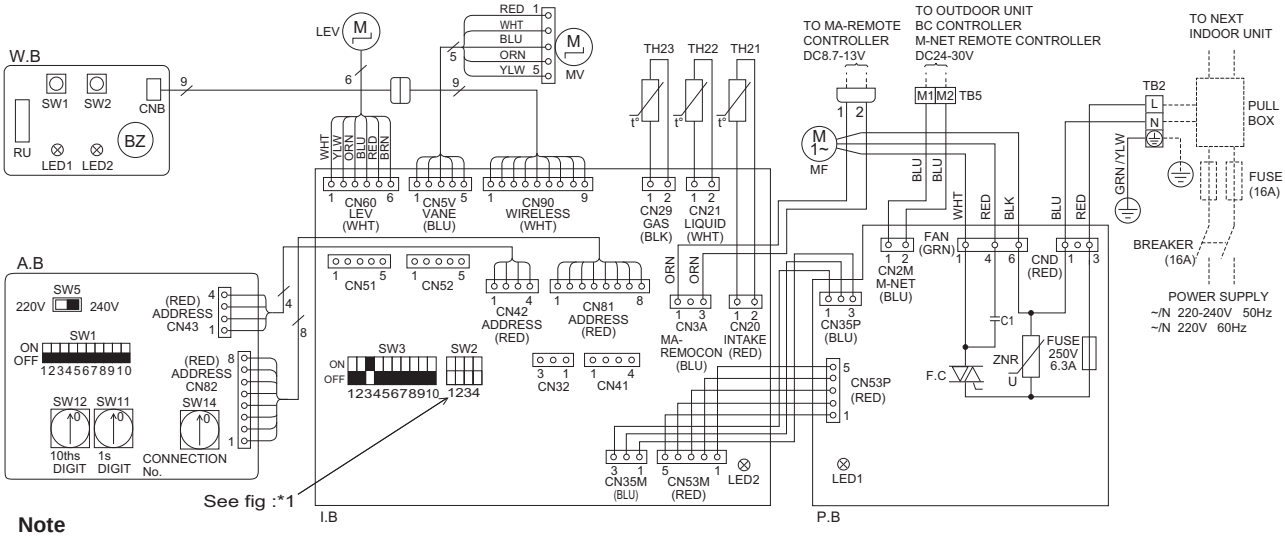

Note

1.At servicing for outdoor unit, always follow the wiring diagram of outdoor unit.

2.In case of using MA-remote controller,please connect MA-remote controller cable in an accessory to the connector (1 2) (Remote controller wire is non-polar.)

3.In case of using M-NET,please connect to TB5 (Transmission line is non-polar.)

4.Symbols used in wiring diagram above are, ▭▭▭ : terminal block, ○○○ : connector

5.The setting of the SW2 dip switches differs in the capacity. For the detail, refer to the fig :*1.

6.Please set the switch SW5 according to the power supply voltage.
Set SW5 to 240V side when the power supply is 230 and 240 volts.
When the power supply is 220 volts, set SW5 to 220V side.

LED on indoor board for service

Mark	Meaning	Function
LED1	Main power supply	Main power supply (indoor unit:220-240V) power on → lamp is lit
LED2	Power supply for MA-Remote controller	Power supply for MA-Remote controller on → lamp is lit

<*1>

MODELS	SW2	MODELS	SW2	MODELS	SW2
P15	ON OFF 1 2 3 4	P20	ON OFF 1 2 3 4	P25	ON OFF 1 2 3 4

PKFY

PKFY-P32, 40, 50VHM-E

SYMBOL	NAME		SYMBOL	NAME	
I.B	INDOOR CONTROLLER BOARD		TH21	THERMISTOR	ROOM TEMP. DETECTION (0°C/15kΩ, 25°C/5.4kΩ)
CN32	CONNECTOR	REMOTE SWITCH			
CN51		CENTRALLY CONTROL	TH22		PIPE TEMP. DETECTION / LIQUID (0°C/15kΩ, 25°C/5.4kΩ)
CN52		REMOTE INDICATION			
BZ	BUZZER		TH23		PIPE TEMP. DETECTION / GAS1 (0°C/15kΩ, 25°C/5.4kΩ)
DSA	SURGE ABSORBER				
FUSE	FUSE (T3.15AL 250V)		TH24		PIPE TEMP. DETECTION / GAS2 (0°C/15kΩ, 25°C/5.4kΩ)
LED1	POWER SUPPLY (I.B)				
LED2	POWER SUPPLY (I.B)		A.B	ADDRESS BOARD	
SW2	SWITCH	CAPACITY CODE	SWA	SWITCH	FAN SPEED SELECTOR
SW3		MODE SELECTION	SW1		MODE SELECTION
SW4		MODEL SELECTOR	SW11		ADDRESS SETTING 1s DIGIT
SWE		DRAIN PUMP (TEST MODE)	SW12		ADDRESS SETTING 10ths DIGIT
X1	AUX.RELAY	DRAIN PUMP (OPTION)	SW14		BRANCH No.
MOV 01.02	VARISTOR		S.B	SWITCH BOARD	
LEV	LINEAR EXPANSION VALVE		SWE1	EMERGENCY OPERATION(HEAT)	
MF	FAN MOTOR		SWE2	EMERGENCY OPERATION(COOL)	
MV	VANE MOTOR		W.B	PCB FOR WIRELESS REMOTE CONTROLLER	
TB2	TERMINAL BLOCK	POWER SUPPLY	LED1	LED(OPERATION INDICATOR:GREEN)	
TB5		TRANSMISSION	LED2	LED(OPERATION FOR HEATING :ORANGE)	
TB15		MA-REMOTE CONTROLLER	RU	RECEIVING UNIT	
			DP	DRAIN PUMP (OPTION)	
			FS	DRAIN FLOAT SWITCH (OPTION)	

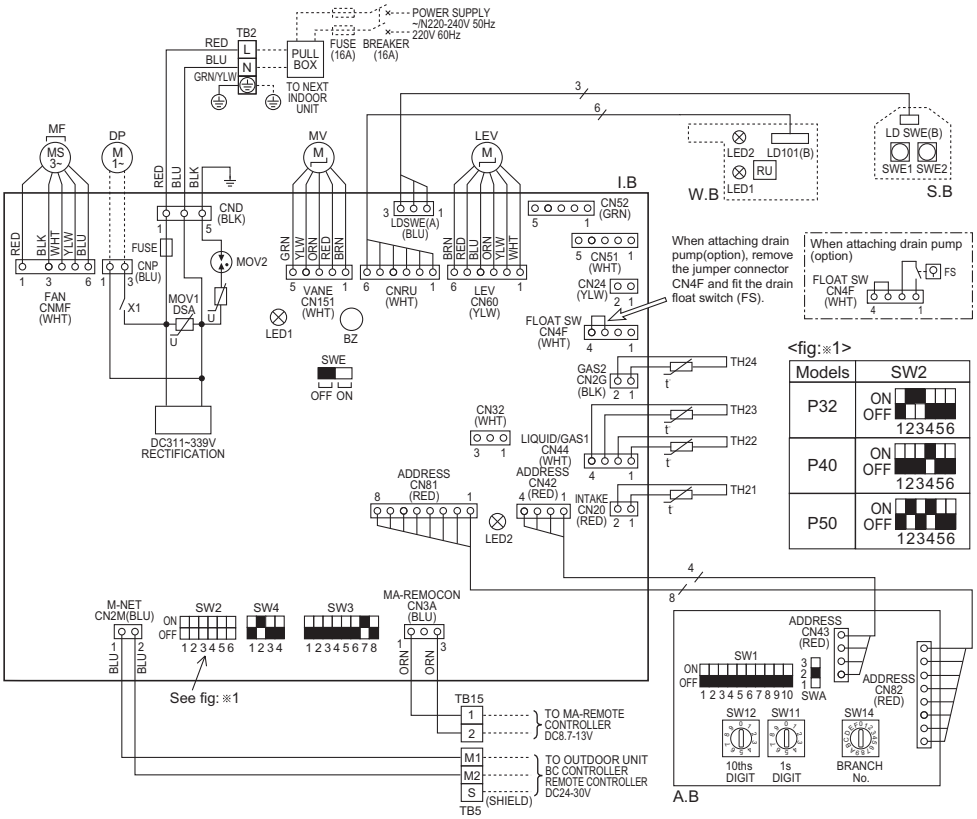

<fig:※1>

Models	SW2
P32	ON OFF 123456
P40	ON OFF 123456
P50	ON OFF 123456

LED on indoor board for service

Mark	Meaning	Function
LED1	Main power supply	Main power supply (Indoor unit:220-240V) Power on → lamp is lit
LED2	Power supply for MA-Remote controller	Power supply for MA-Remote controller on → lamp is lit

NOTES:
1.At servicing for outdoor unit,always follow the wiring diagram of outdoor unit.
2.In case of using MA-Remote controller, please connect to TB15.
(Remote controller wire is non-polar.)
3.In case of using M-NET, please connect to TB5. (Transmission line is non-polar.)
4.Symbol [S] of TB5 is the shield wire connection.
5.Symbols used in wiring diagram above are, □□□: terminal block, ○○○:connecter.
6.The setting of the SW2 dip switches differs in the capacity. for the detail, refer to the fig: ※1.

PKFY

PKFY-P63, 100VKM-E

SYMBOL		NAME	
I.B		INDOOR CONTROLLER BOARD	
	CN32	CONNECTOR	REMOTE SWITCH
	CN51		CENTRALLY CONTROL
	CN52		REMOTE INDICATION
	BZ	BUZZER	
	DSA	SURGE ABSORBER	
	FUSE	FUSE (T3.15AL 250V)	
	LED1	POWER SUPPLY (I.B)	
	LED2	POWER SUPPLY (I.B)	
	SW2	SWITCH	CAPACITY CODE
	SW3		MODE SELECTION
	SW4		MODEL SELECTOR
	SWE		DRAIN PUMP (TEST MODE)
	X1	AUX.RELAY	DRAIN PUMP (OPTION)
	MOV 01.02	VARISTOR	
LEV		LINEAR EXPANSION VALVE	
MF		FAN MOTOR	
MV		VANE MOTOR	
TB2		TERMINAL BLOCK	POWER SUPPLY
TB5			TRANSMISSION
TB15			MA-REMOTE CONTROLLER

SYMBOL		NAME	
TH21		THERMISTOR	ROOM TEMP. DETECTION (0°C/15kΩ, 25°C/5.4kΩ)
TH22			PIPE TEMP. DETECTION / LIQUID (0°C/15kΩ, 25°C/5.4kΩ)
TH23			PIPE TEMP. DETECTION / GAS1 (0°C/15kΩ, 25°C/5.4kΩ)
TH24			PIPE TEMP. DETECTION / GAS2 (0°C/15kΩ, 25°C/5.4kΩ)
A.B		ADDRESS BOARD	
	SWA	SWITCH	FAN SPEED SELECTOR
	SW1		MODE SELECTION
	SW11		ADDRESS SETTING 1s DIGIT
	SW12		ADDRESS SETTING 10ths DIGIT
	SW14		BRANCH No.
S.B		SWITCH BOARD	
	SWE1	EMERGENCY OPERATION(HEAT)	
	SWE2	EMERGENCY OPERATION(COOL)	
W.B		PCB FOR WIRELESS REMOTE CONTROLLER	
	LED1	LED(OPERATION INDICATOR:GREEN)	
	LED2	LED(OPERATION FOR HEATING :ORANGE)	
	RU	RECEIVING UNIT	
DP		DRAIN PUMP (OPTION)	
	FS	DRAIN FLOAT SWITCH (OPTION)	

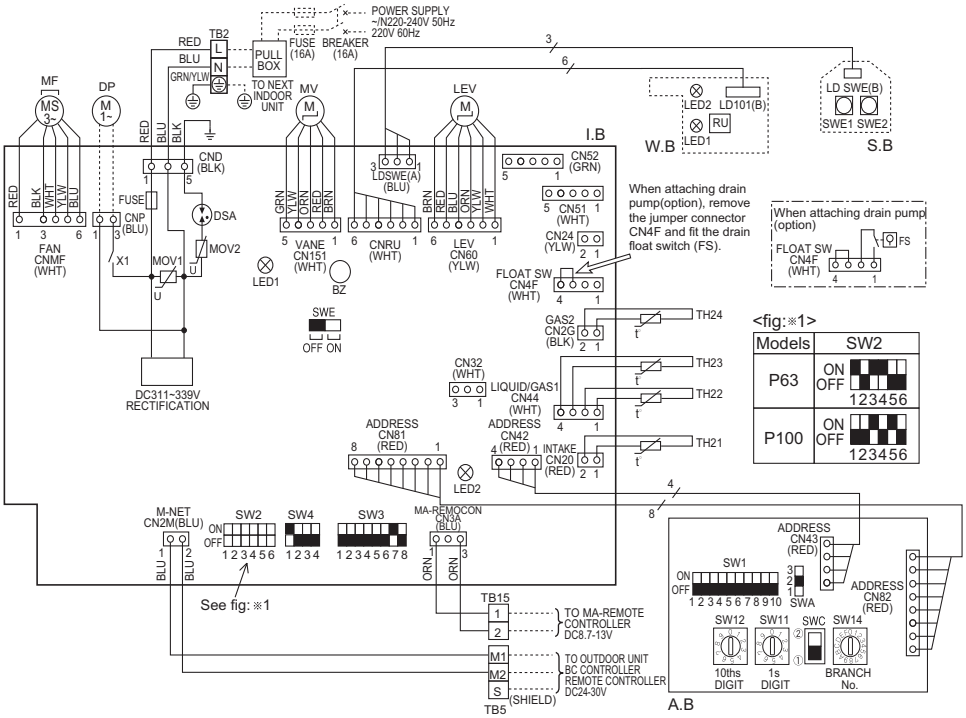

<fig:※1>

Models	SW2
P63	ON OFF 123456
P100	ON OFF 123456

LED on indoor board for service

Mark	Meaning	Function
LED1	Main power supply	Main power supply (Indoor unit:220-240V) Power on → lamp is lit
LED2	Power supply for MA-Remote controller	Power supply for MA-Remote controller on → lamp is lit

NOTES:
1.At servicing for outdoor unit,always follow the wiring diagram of outdoor unit.
2.In case of using MA-Remote controller, please connect to TB15.
(Remote controller wire is non-polar.)
3.In case of using M-NET, please connect to TB5. (Transmission line is non-polar.)
4.Symbol [S] of TB5 is the shield wire connection.
5.Symbols used in wiring diagram above are, ▭▭▭: terminal block, ▭○○○▭:connecter.
6.The setting of the SW2 dip switches differs in the capacity. for the detail, refer to the fig:※1.

PKFY

5. SOUND LEVELS

5-1. Sound levels

Wall mounted

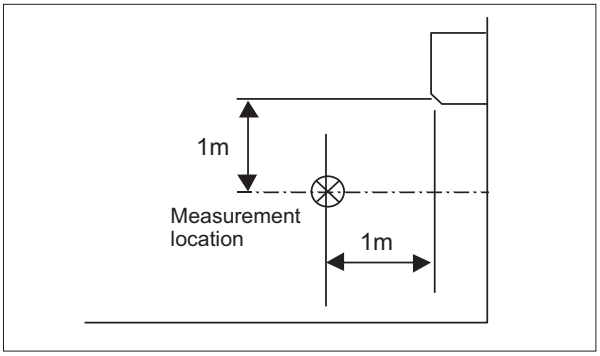

Sound level at anechoic room : Low-(Middle2-Middle)-High

Model	Sound level dB (A)
PKFY-P15VBM-E	29-31-32-33
PKFY-P20VBM-E PKFY-P25VBM-E	29-31-34-36
PKFY-P32VHM-E	34-37-41
PKFY-P40VHM-E	34-38-41
PKFY-P50VHM-E	34-39-43
PKFY-P63VKM-E	39-45
PKFY-P100VKM-E	41-49

* Measured in anechoic room.

5-2. NC curves

PKFY-P15VBM-E

External Static Pressure: 0Pa
Power Source: 220-240V/50Hz, 220V/60Hz

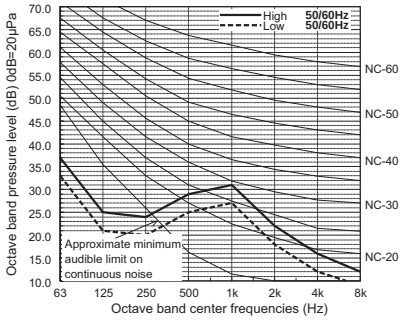

PKFY-P20, 25VBM-E

External Static Pressure: 0Pa
Power Source: 220-240V/50Hz, 220V/60Hz

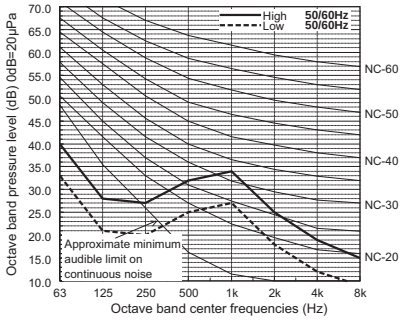

PKFY-P32VHM-E

External Static Pressure: 0Pa
Power Source: 220-240V/50Hz, 220V/60Hz

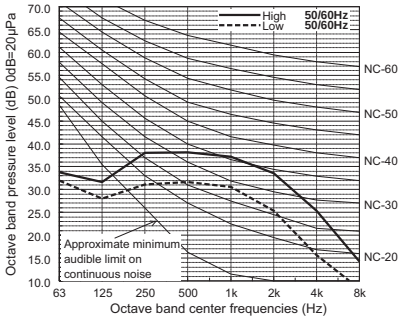

PKFY-P40VHM-E

External Static Pressure: 0Pa
Power Source: 220-240V/50Hz, 220V/60Hz

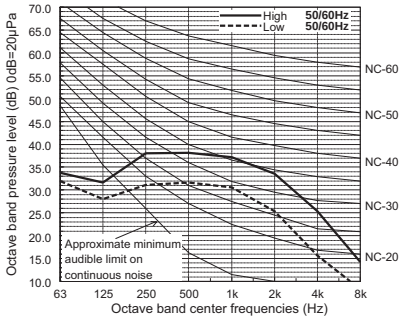

PKFY-P50VHM-E

External Static Pressure: 0Pa
Power Source: 220-240V/50Hz, 220V/60Hz

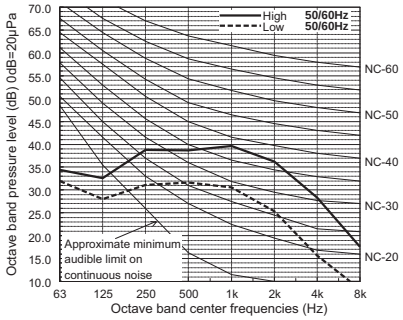

PKFY-P63VKM-E

External Static Pressure: 0Pa
Power Source: 220-240V/50Hz, 220V/60Hz

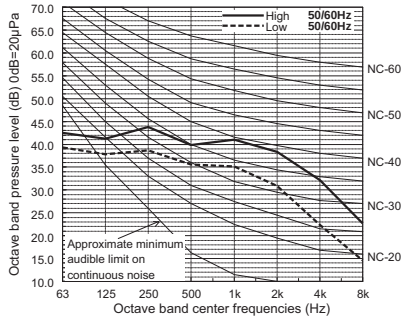

PKFY-P100VKM-E

External Static Pressure: 0Pa
Power Source: 220-240V/50Hz, 220V/60Hz

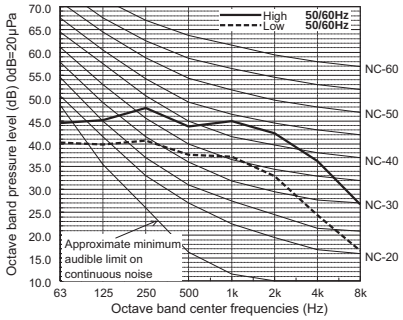

6. TEMPERATURE/AIRFLOW DISTRIBUTIONS

6-1. Temperature distributions

PKFY-P15-25VBM-E

<Cooling mode>
Horizontal air flow

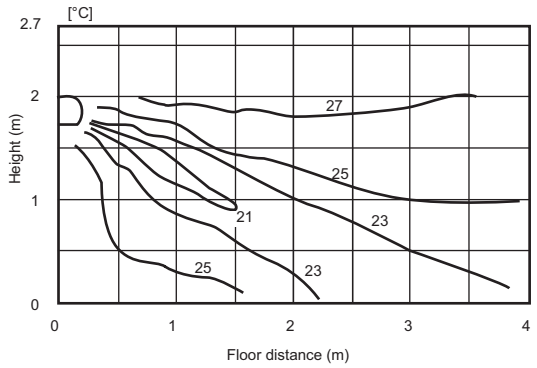

<Heating mode>
Downward air flow

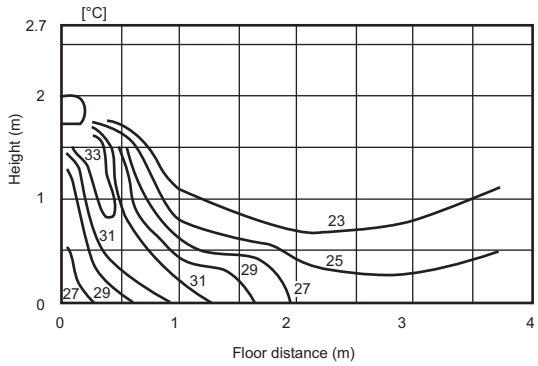

PKFY-P32-50VHM-E

<Cooling mode>
Horizontal air flow

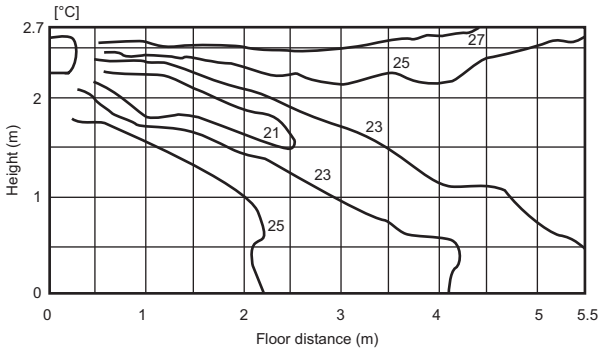

<Heating mode>
Downward air flow

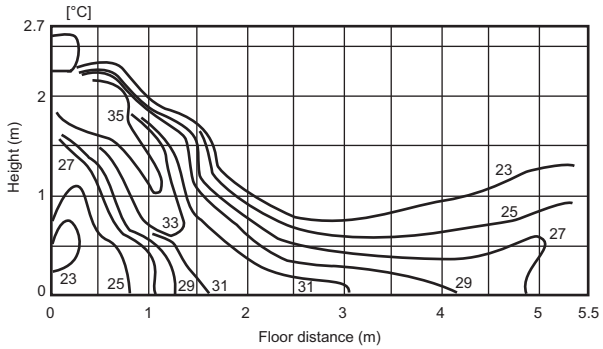

PKFY-P63, 100VKM-E

<Cooling mode>
Horizontal air flow

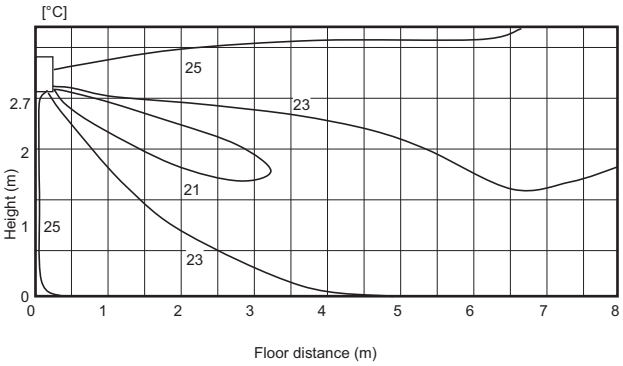

<Heating mode>
Downward air flow

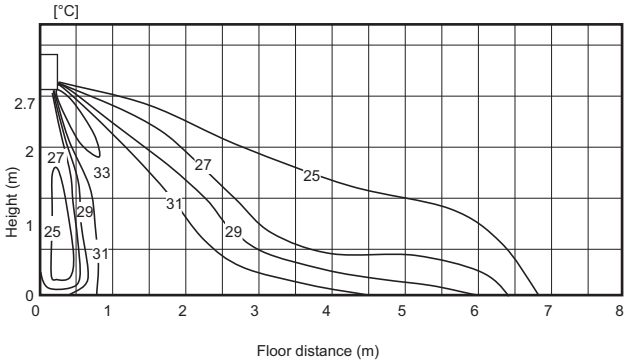

Note : These figures show typical temperature distributions in the conditions above. In the actual installation, they may differ from these figures under the influence of air temperature conditions, ceiling height, cooling/heating load,obstacles,etc.

PKFY

6-2. Airflow distributions

PKFY-P15-25VBM-E

<Fan mode>
Horizontal air flow

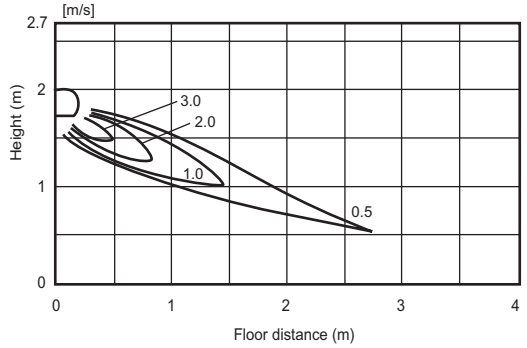

<Fan mode>
Downward air flow

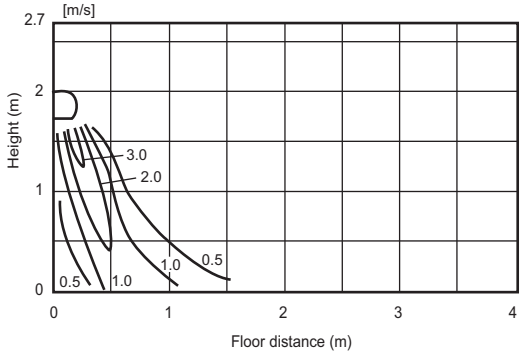

PKFY-P32-50VHM-E

<Fan mode>
Horizontal air flow

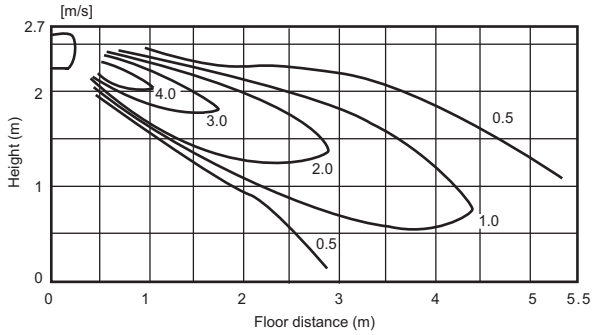

<Fan mode>
Downward air flow

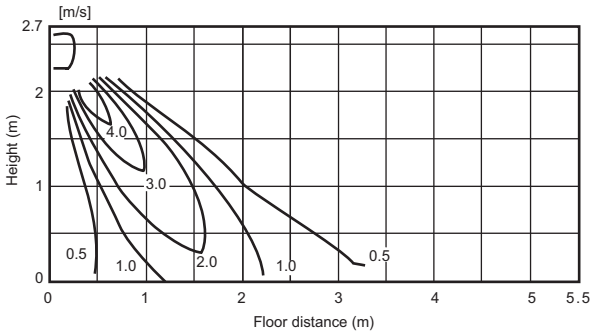

PKFY-P63, 100VKM-E

<Fan mode>
Horizontal air flow

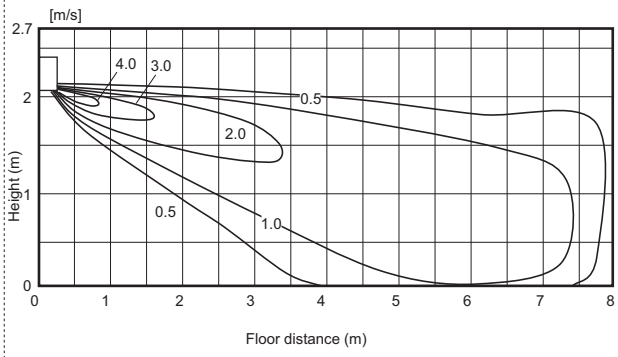

<Fan mode>
Downward air flow

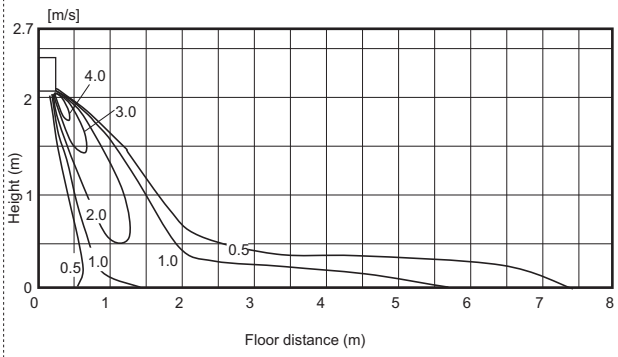

Note : These figures show typical airflow distributions in the conditions above. In the actual installation, they may differ from these figures under the influence of air temperature conditions, ceiling height, cooling/heating load,obstacles,etc.

PKFY

7. OPTIONAL PARTS

7-1. Optional parts line up for the Indoor unit

	External LEV Box	Drain pump
PKFY-P15, 20, 25VBM-E	PAC-SG95LE-E	—
PKFY-P32, 40, 50VHM-E	—	PAC-SH75DM-E
PKFY-P63, 100VKM-E	—	PAC-SH94DM-E

7-2. External LEV Box

Item	① External LEV Box	② Joint pipe	③ Pipe cover	④ Band	⑤ Fastener
Quantity	1	2	2	2	2
Shape	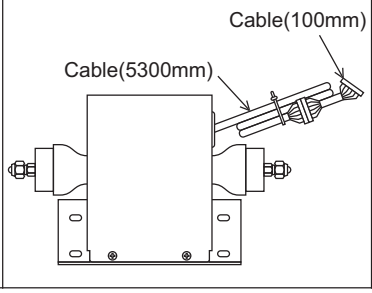	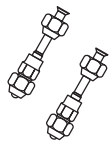	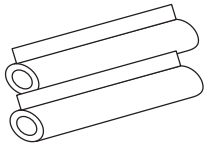		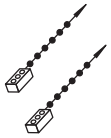

Detailed installation information should be referred to its Installation Manual (RG79A417K01)

7-3. Drain pump

PAC-SH75DM-E

If drain water can not flow out the Indoor unit by gravity and gradient, a Drain-pump for draining is needed.
Drain pump PAC-SH75DM-E can pump water up to 800mm high from the drain pan.

Item	① Drain pump	② Screw	③ Drain hose	④ Drain hose cover	⑤ Hose band
Quantity	1	(M4×16)×1, (M4×35)×6	1	1	1
Shape	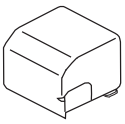		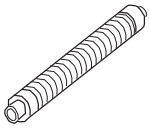	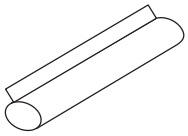	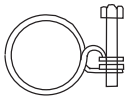

Item	⑥ Band	⑦ Installtion plate	⑧ Wiring diagram
Quantity	1	1	1
Shape	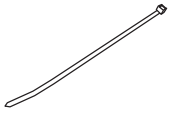	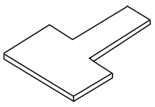	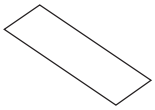

Detailed installation information should be referred to its Installation Manual (RG79Y375H01)

PAC-SH94DM-E

If drain water can not flow out the Indoor unit by gravity and gradient, a Drain-pump for draining is needed.
Drain pump PAC-SH94DM-E can pump water up to 800mm high from the drain pan.

Item	① Drain pump	② Screw	③ Drain hose	④ Drain hose cover	⑤ Hose band
Quantity	1	(M4×16)×1, (M4×35)×6	1	1	1
Shape	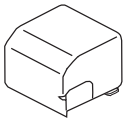		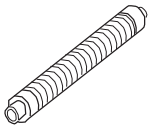	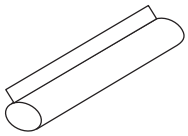	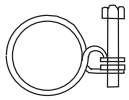

Item	⑥ Band	⑦ Installtion plate	⑧ Wiring diagram
Quantity	1	1	1
Shape	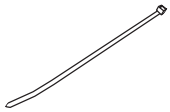	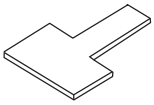	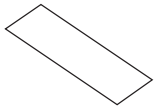

Detailed installation information should be referred to its Installation Manual (RG79Y376H01)

PKFY

PFFY-P-VKM-E
PFFY-P-VLEM-E
PFFY-P-VLRM-E
PFFY-P-VLRMM-E

1. SPECIFICATIONS 1 - 164

2. EXTERNAL DIMENSIONS 1 - 170

3. CENTER OF GRAVITY 1 - 174

4. ELECTRICAL WIRING DIAGRAMS 1 - 176

5. SOUND LEVELS
   5-1. Sound levels 1 - 179
   5-2. NC curves 1 - 179
   5-3. Fan characteristics curves 1 - 182

6. TEMPERATURE/AIRFLOW DISTRIBUTIONS
   6-1. Temperature distributions 1 - 185
   6-2. Airflow distributions 1 - 186

1. SPECIFICATIONS

Model			PFFY-P20VKM-E	PFFY-P25VKM-E	PFFY-P32VKM-E	PFFY-P40VKM-E
Power source			1-phase 220-230-240V 50Hz			
Cooling capacity (Nominal)	✻1	kW	2.2	2.8	3.6	4.5
	✻1	kcal / h	1,900	2,400	3,100	3,900
	✻1	Btu / h	7,500	9,600	12,300	15,400
	✻2	kcal / h	2,000	2,500	3,200	4,000
✻4	Power input	kW	0.025	0.025	0.025	0.028
✻4	Current input	A	0.20	0.20	0.20	0.24
Heating capacity (Nominal)	✻3	kW	2.5	3.2	4.0	5.0
	✻3	kcal / h	2,200	2,800	3,400	4,300
	✻3	Btu / h	8,500	10,900	13,600	17,100
✻4	Power input	kW	0.025	0.025	0.025	0.028
✻4	Current input	A	0.20	0.20	0.20	0.24
External finish			Plastic (Pure White)			
External dimension H x W x D		mm	600 x 700 x 200			
		in.	23-5/8 x 27-9/16 x 7-7/8			
Net weight		kg (lb)	15 (34)			
Heat exchanger			Cross fin (Aluminium fin and copper tube)			
FAN	Type x Quantity		Line flow fan x 2			
	External static press.	Pa	0			
		mmH_2O	0			
	Motor type		DC motor			
	Motor output	kW	0.03 x 2			
	Driving mechanism		Direct-drive			
	Airflow rate (Low-Mid-High -SHigh)	m^3 / min	5.9 - 6.8 - 7.6 - 8.7	6.1 - 7.0 - 8.0 - 9.1	6.1 - 7.0 - 8.0 - 9.1	8.0 - 9.0 - 9.5 - 10.7
		L / s	98 - 113 - 127 - 145	102 - 117 - 133 - 152	102 - 117 - 133 - 152	133 - 150 - 158 - 178
		cfm	208 - 240 - 268 - 307	215 - 247 - 283 - 321	215 - 247 - 283 - 321	283 - 318 - 335 - 378
Sound pressure level (Low-Mid-High-SHigh) (measured in anechoic room) ✻4		dB <A>	27 - 31 - 34 - 37	28 - 32 - 35 - 38	28 - 32 - 35 - 38	35 - 38 - 42 - 44
Insulation material			Polyethylene sheet			
Air filter			PP honeycomb fabric (Catechin air filter)			
Protection device			Fuse			
Refrigerant control device			LEV			
Connectable outdoor unit			R410A CITY MULTI			
Diameter of refrigerant pipe	Liquid (R410A)	mm (in.)	ø6.35 (ø1/4) Flare			
	Gas (R410A)	mm (in.)	ø12.7 (ø1/2) Flare			
Field drain pipe size		mm (in.)	I.D. 16mm (5/8)			
Drawing	External		IU-BK01-B517			
	Wiring		IU-RG79-V367			
	Refrigerant cycle		-			
Standard attachment	Document Accessory		Installation Manual, Instruction Book			
Remark	Optional parts		-			
	Installation		Details on foundation work, duct work, insulation work, electrical wiring, power source switch, and other items shall be referred to the Installation Manual.			

Note :

	✻1 Nominal cooling conditions	✻2 Nominal cooling conditions	✻3 Nominal heating conditions
Indoor :	27˚CDB/19˚CWB (81˚FDB/66˚FWB)	27˚CDB/19.5˚CWB (81˚FDB/67˚FWB)	20˚CDB (68˚FDB)
Outdoor :	35˚CDB (95˚FDB)	35˚CDB (95˚FDB)	7˚CDB/6˚CWB (45˚FDB/43˚FWB)
Pipe length :	7.5 m (24-9/16 ft)	5 m (16-3/8 ft)	7.5 m (24-9/16 ft)
Level difference :	0 m (0 ft)	0 m (0 ft)	0 m (0 ft)

* Nominal conditions ✻1, ✻3 are subject to JIS B8615-1.
* Due to continuing improvement, above specification may be subject to change without notice.

✻4 The values are measured at the rated external static pressure.

Unit converter

kcal/h = kW x 860
Btu/h = kW x 3,412
cfm = m^3/min x 35.31
lb = kg / 0.4536

*Above specification data is subject to rounding variation.

Ref.: Spec_PFFY-P-VKM-E_1

PFFY

1. SPECIFICATIONS

Model			PFFY-P20VLEM-E	PFFY-P25VLEM-E	PFFY-P32VLEM-E	PFFY-P40VLEM-E
Power source			1-phase 220-240V 50Hz, 1-phase 208-230V 60Hz			
Cooling capacity (Nominal)	✻1	kW	2.2	2.8	3.6	4.5
	✻1	kcal / h	1,900	2,400	3,100	3,900
	✻1	Btu / h	7,500	9,600	12,300	15,400
	✻2	kcal / h	2,000	2,500	3,150	4,000
✻4	Power input	kW	0.04 / 0.06	0.04 / 0.06	0.06 / 0.07	0.065 / 0.075
✻4	Current input	A	0.19 / 0.25	0.19 / 0.25	0.29/0.30	0.32 / 0.33
Heating capacity (Nominal)	✻3	kW	2.5	3.2	4.0	5.0
	✻3	kcal / h	2,200	2,800	3,400	4,300
	✻3	Btu / h	8,500	10,900	13,600	17,100
✻4	Power input	kW	0.04 / 0.06	0.04 / 0.06	0.06 / 0.07	0.065 / 0.075
✻4	Current input	A	0.19 / 0.25	0.19 / 0.25	0.29 / 0.30	0.32 / 0.33
External finish			Acrylic painted, MUNSELL (5Y 8/1)			
External dimension H x W x D		mm	630 x 1,050 x 220	630 x 1,050 x 220	630 x 1,170 x 220	630 x 1,170 x 220
		in.	24-13/16 x 41-3/8 x 8-11/16	24-13/16 x 41-3/8 x 8-11/16	24-13/16 x 46-1/8 x 8-11/16	24-13/16 x 46-1/8 x 8-11/16
Net weight		kg (lb)	23 (51)	23 (51)	25 (56)	26 (58)
Heat exchanger			Cross fin (Aluminium fin and copper tube)			
FAN	Type x Quantity		Sirocco fan x 1	Sirocco fan x 1	Sirocco fan x 2	Sirocco fan x 2
	External static press.	Pa	0	0	0	0
		mmH_2O	0	0	0	0
	Motor type		1-phase induction motor			
	Motor output	kW	0.015	0.015	0.018	0.030
	Driving mechanism		Direct-driven by motor			
	Airflow rate (Low-High)	m^3 / min	5.5 - 6.5	5.5 - 6.5	7.0 - 9.0	9.0 - 11.0
		L / s	92 - 108	92 - 108	117 - 150	150 - 183
		cfm	194 - 230	194 - 230	247 - 318	318 - 388
Sound pressure level (Low-High) (measured in anechoic room)		dB <A>	32 - 38 (220V, 50Hz)	32 - 38 (220V, 50Hz)	33 - 38 (220V, 50Hz)	36 - 41 (220V, 50Hz)
		dB <A>	33 - 39 (230V, 50Hz)	33 - 39 (230V, 50Hz)	34 - 39 (230V, 50Hz)	37 - 42 (230V, 50Hz)
	✻4	dB <A>	34 - 40 (240V, 50Hz)	34 - 40 (240V, 50Hz)	35 - 40 (240V, 50Hz)	38 - 43 (240V, 50Hz)
Insulation material			Polyethylene foam, Urethane foam			
Air filter			PP honeycomb fabric (washable)			
Protection device			Fuse			
Refrigerant control device			LEV			
Connectable outdoor unit			R410A CITY MULTI			
Diameter of refrigerant pipe	Liquid (R410A)	mm (in.)	ø6.35 (ø1/4) Flare	ø6.35 (ø1/4) Flare	ø6.35 (ø1/4) Flare	ø6.35 (ø1/4) Flare
	Gas (R410A)	mm (in.)	ø12.7 (ø1/2) Flare	ø12.7 (ø1/2) Flare	ø12.7 (ø1/2) Flare	ø12.7 (ø1/2) Flare
Field drain pipe size		mm (in.)	I.D. 26mm (1)			
Drawing	External		IU-W65-3950			
	Wiring		IU-W65-3960			
	Refrigerant cycle		-			
Standard attachment	Document		Installation Manual, Instruction Book			
	Accessory		Drain hose (O.D.27mm(1-3/32), (End O.D.20mm(13/16))) (flexible joint)			
Remark	Optional parts		-			
	Installation		Details on foundation work, duct work, insulation work, electrical wiring, power source switch, and other items shall be referred to the Installation Manual.			

Note :

	✻1 Nominal cooling conditions	✻2 Nominal cooling conditions	✻3 Nominal heating conditions
Indoor :	27˚CDB/19˚CWB (81˚FDB/66˚FWB)	27˚CDB/19.5˚CWB (81˚FDB/67˚FWB)	20˚CDB (68˚FDB)
Outdoor :	35˚CDB (95˚FDB)	35˚CDB (95˚FDB)	7˚CDB/6˚CWB (45˚FDB/43˚FWB)
Pipe length :	7.5 m (24-9/16 ft)	5 m (16-3/8 ft)	7.5 m (24-9/16 ft)
Level difference :	0 m (0 ft)	0 m (0 ft)	0 m (0 ft)

* Nominal conditions ✻1, ✻3 are subject to JIS B8615-1.
* Due to continuing improvement, above specification may be subject to change without notice.

✻4 The values are measured at the rated external static pressure.

Unit converter

kcal/h = kW x 860
Btu/h = kW x 3,412
cfm = m^3/min x 35.31
lb = kg / 0.4536

*Above specification data is subject to rounding variation.

Ref.: Spec_PFFY-P-VLE(R)M-E_1

PFFY

1. SPECIFICATIONS

Model			PFFY-P50VLEM-E	PFFY-P63VLEM-E	PFFY-P20VLRM-E	PFFY-P25VLRM-E
Power source			1-phase 220-240V 50Hz, 1-phase 208-230V 60Hz			
Cooling capacity (Nominal)	✻1	kW	5.6	7.1	2.2	2.8
	✻1	kcal / h	4,800	6,100	1,900	2,400
	✻1	Btu / h	19,100	24,200	7,500	9,600
	✻2	kcal / h	5,000	6,300	2,000	2,500
✻4	Power input	kW	0.085 / 0.09	0.1 / 0.11	0.04 / 0.06	0.04 / 0.06
✻4	Current input	A	0.40 / 0.41	0.46 / 0.47	0.19 / 0.25	0.19 / 0.25
Heating capacity (Nominal)	✻3	kW	6.3	8.0	2.5	3.2
	✻3	kcal / h	5,400	6,900	2,200	2,800
	✻3	Btu / h	21,500	27,300	8,500	10,900
✻4	Power input	kW	0.085 / 0.09	0.1 / 0.11	0.04 / 0.06	0.04 / 0.06
✻4	Current input	A	0.40 / 0.41	0.46 / 0.47	0.19 / 0.25	0.19 / 0.25
External finish			Acrylic painted, MUNSELL (5Y 8/1)		Galvanized	
External dimension H x W x D		mm	630 x 1,410 x 220	630 x 1,410 x 220	639 x 886 x 220	639 x 886 x 220
		in.	24-13/16 x 55-9/16 x 8-11/16	24-13/16 x 55-9/16 x 8-11/16	25-3/16 x 34-15/16 x 8-11/16	25-3/16 x 34-15/16 x 8-11/16
Net weight		kg (lb)	30 (67)	32 (71)	18.5 (41)	18.5 (41)
Heat exchanger			Cross fin (Aluminium fin and copper tube)			
FAN	Type x Quantity		Sirocco fan x 2	Sirocco fan x 2	Sirocco fan x 1	Sirocco fan x 1
	External static press.	Pa	0	0	0	0
		mmH_2O	0	0	0	0
	Motor type		1-phase induction motor			
	Motor output	kW	0.035	0.050	0.015	0.015
	Driving mechanism		Direct-driven by motor			
	Airflow rate (Low-High)	m^3 / min	12.0 - 14.0	12.0 - 15.5	5.5 - 6.5	5.5 - 6.5
		L / s	200 - 233	200 - 258	92 - 108	92 - 108
		cfm	424 - 494	424 - 547	194 - 230	194 - 230
Sound pressure level (Low-High) (measured in anechoic room)		dB <A>	36 - 41 (220V, 50Hz)	38 - 44 (220V, 50Hz)	32 - 38 (220V, 50Hz)	32 - 38 (220V, 50Hz)
		dB <A>	37 - 42 (230V, 50Hz)	39 - 45 (230V, 50Hz)	33 - 39 (230V, 50Hz)	33 - 39 (230V, 50Hz)
	✻4	dB <A>	38 - 43 (240V, 50Hz)	40 - 46 (240V, 50Hz)	34 - 40 (240V, 50Hz)	34 - 40 (240V, 50Hz)
Insulation material			Polyethylene foam, Urethane foam			
Air filter			PP honeycomb fabric (washable)			
Protection device			Fuse			
Refrigerant control device			LEV			
Connectable outdoor unit			R410A CITY MULTI			
Diameter of refrigerant pipe	Liquid (R410A)	mm (in.)	ø6.35 (ø1/4) Flare	ø9.52 (ø3/8) Flare	ø6.35 (ø1/4) Flare	ø6.35 (ø1/4) Flare
	Gas (R410A)	mm (in.)	ø12.7 (ø1/2) Flare	ø15.88 (ø5/8) Flare	ø12.7 (ø1/2) Flare	ø12.7 (ø1/2) Flare
Field drain pipe size		mm (in.)	I.D. 26mm (1)			
Drawing	External		IU-W65-3950	IU-W65-3950	IU-W65-3951	IU-W65-3951
	Wiring		IU-W65-3960	IU-W65-3960	IU-W65-3960	IU-W65-3960
	Refrigerant cycle		-	-	-	-
Standard attachment	Document		Installation Manual, Instruction Book			
	Accessory		Drain hose (O.D.27mm(1-3/32), (End O.D.20mm(13/16))) (flexible joint)			
Remark	Optional parts		-			
	Installation		Details on foundation work, duct work, insulation work, electrical wiring, power source switch, and other items shall be referred to the Installation Manual.			

Note :

	✻1 Nominal cooling conditions	✻2 Nominal cooling conditions	✻3 Nominal heating conditions
Indoor :	27˚CDB/19˚CWB (81˚FDB/66˚FWB)	27˚CDB/19.5˚CWB (81˚FDB/67˚FWB)	20˚CDB (68˚FDB)
Outdoor :	35˚CDB (95˚FDB)	35˚CDB (95˚FDB)	7˚CDB/6˚CWB (45˚FDB/43˚FWB)
Pipe length :	7.5 m (24-9/16 ft)	5 m (16-3/8 ft)	7.5 m (24-9/16 ft)
Level difference :	0 m (0 ft)	0 m (0 ft)	0 m (0 ft)

* Nominal conditions ✻1, ✻3 are subject to JIS B8615-1.
* Due to continuing improvement, above specification may be subject to change without notice.

✻4 The values are measured at the rated external static pressure.

Unit converter

kcal/h = kW x 860
Btu/h = kW x 3,412
cfm = m^3/min x 35.31
lb = kg / 0.4536

*Above specification data is subject to rounding variation.

Ref.: Spec_PFFY-P-VLE(R)M-E_2

PFFY

1. SPECIFICATIONS

Model			PFFY-P32VLRM-E	PFFY-P40VLRM-E	PFFY-P50VLRM-E	PFFY-P63VLRM-E
Power source			1-phase 220-240V 50Hz, 1-phase 208-230V 60Hz			
Cooling capacity (Nominal)	✻1	kW	3.6	4.5	5.6	7.1
	✻1	kcal / h	3,100	3,900	4,800	6,100
	✻1	Btu / h	12,300	15,400	19,100	24,200
	✻2	kcal / h	3,150	4,000	5,000	6,300
✻4	Power input	kW	0.06 / 0.07	0.065 / 0.075	0.085 / 0.09	0.1 / 0.11
✻4	Current input	A	0.29 / 0.30	0.32 / 0.33	0.40 / 0.41	0.46 / 0.47
Heating capacity (Nominal)	✻3	kW	4.0	5.0	6.3	8.0
	✻3	kcal / h	3,400	4,300	5,400	6,900
	✻3	Btu / h	13,600	17,100	21,500	27,300
✻4	Power input	kW	0.06 / 0.07	0.065 / 0.075	0.085 / 0.09	0.1 / 0.11
✻4	Current input	A	0.29 / 0.30	0.32 / 0.33	0.40 / 0.41	0.46 / 0.47
External finish			Galvanized			
External dimension H x W x D		mm	639 x 1,006 x 220	639 x 1,006 x 220	639 x 1,246 x 220	639 x 1,246 x 220
		in.	25-3/16 x 39-5/8 x 8-11/16	25-3/16 x 39-5/8 x 8-11/16	25-3/16 x 49-1/16 x 8-11/16	25-3/16 x 49-1/16 x 8-11/16
Net weight		kg (lb)	20 (45)	21 (47)	25 (56)	27 (60)
Heat exchanger			Cross fin (Aluminium fin and copper tube)			
FAN	Type x Quantity		Sirocco fan x 2	Sirocco fan x 2	Sirocco fan x 2	Sirocco fan x 2
	External static press.	Pa	0	0	0	0
		mmH_2O	0	0	0	0
	Motor type		1-phase induction motor			
	Motor output	kW	0.018	0.030	0.035	0.050
	Driving mechanism		Direct-driven by motor			
	Airflow rate (Low-High)	m^3 / min	7.0 - 9.0	9.0 - 11.0	12.0 - 14.0	12.0 - 15.5
		L / s	117 - 150	150 - 183	200 - 233	200 - 258
		cfm	247 - 318	318 - 388	424 - 494	424 - 547
Sound pressure level (Low-High) (measured in anechoic room)		dB <A>	33 - 38 (220V, 50Hz)	36 - 41 (220V, 50Hz)	36 - 41 (220V, 50Hz)	38 - 44 (220V, 50Hz)
		dB <A>	34 - 39 (230V, 50Hz)	37 - 42 (230V, 50Hz)	37 - 42 (230V, 50Hz)	39 - 45 (230V, 50Hz)
	✻4	dB <A>	35 - 40 (240V, 50Hz)	38 - 43 (240V, 50Hz)	38 - 43 (240V, 50Hz)	40 - 46 (240V, 50Hz)
Insulation material			Polyethylene foam, Urethane foam			
Air filter			PP honeycomb fabric (washable)			
Protection device			Fuse			
Refrigerant control device			LEV			
Connectable outdoor unit			R410A CITY MULTI			
Diameter of refrigerant pipe	Liquid (R410A)	mm (in.)	ø6.35 (ø1/4) Flare	ø6.35 (ø1/4) Flare	ø6.35 (ø1/4) Flare	ø9.52 (ø3/8) Flare
	Gas (R410A)	mm (in.)	ø12.7 (ø1/2) Flare	ø12.7 (ø1/2) Flare	ø12.7 (ø1/2) Flare	ø15.88 (ø5/8) Flare
Field drain pipe size		mm (in.)	I.D. 26mm (1)			
Drawing	External		IU-W65-3951			
	Wiring		IU-W65-3960			
	Refrigerant cycle		-			
Standard attachment	Document		Installation Manual, Instruction Book			
	Accessory		Drain hose (O.D.27mm(1-3/32), (End O.D.20mm(13/16))) (flexible joint)			
Remark	Optional parts		-			
	Installation		Details on foundation work, duct work, insulation work, electrical wiring, power source switch, and other items shall be referred to the Installation Manual.			

Note :

	✻1 Nominal cooling conditions	✻2 Nominal cooling conditions	✻3 Nominal heating conditions
Indoor :	27˚CDB/19˚CWB (81˚FDB/66˚FWB)	27˚CDB/19.5˚CWB (81˚FDB/67˚FWB)	20˚CDB (68˚FDB)
Outdoor :	35˚CDB (95˚FDB)	35˚CDB (95˚FDB)	7˚CDB/6˚CWB (45˚FDB/43˚FWB)
Pipe length :	7.5 m (24-9/16 ft)	5 m (16-3/8 ft)	7.5 m (24-9/16 ft)
Level difference :	0 m (0 ft)	0 m (0 ft)	0 m (0 ft)

* Nominal conditions ✻1, ✻3 are subject to JIS B8615-1.
* Due to continuing improvement, above specification may be subject to change without notice.

✻4 The values are measured at the rated external static pressure.

Unit converter

kcal/h = kW x 860
Btu/h = kW x 3,412
cfm = m^3/min x 35.31
lb = kg / 0.4536

*Above specification data is subject to rounding variation.

Ref.: Spec_PFFY-P-VLE(R)M-E_3

PFFY

1. SPECIFICATIONS

Model			PFFY-P20VLRMM-E	PFFY-P25VLRMM-E	PFFY-P32VLRMM-E	PFFY-P40VLRMM-E
Power source			1-phase 220-240V (50/60Hz)			
Cooling capacity (Nominal)	✻1	kW	2.2	2.8	3.6	4.5
	✻1	kcal / h	1,900	2,400	3,100	3,900
	✻1	Btu / h	7,500	9,600	12,300	15,400
	✻2	kcal / h	2,000	2,500	3,150	4,000
✻4	Power input	kW	0.04	0.04	0.04	0.05
✻4	Current input	A	0.34	0.34	0.38	0.43
Heating capacity (Nominal)	✻3	kW	2.5	3.2	4.0	5.0
	✻3	kcal / h	2,200	2,800	3,400	4,300
	✻3	Btu / h	8,500	10,900	13,600	17,100
✻4	Power input	kW	0.04	0.04	0.04	0.05
✻4	Current input	A	0.34	0.34	0.38	0.43
External finish			Galvanized steel plate			
External dimension H x W x D		mm	639 x 886 x 220	639 x 886 x 220	639 x 1006 x 220	639 x 1006 x 220
		in.	25-3/16 x 34-15/16 x 8-11/16	25-3/16 x 34-15/16 x 8-11/16	25-3/16 x 39-5/8 x 8-11/16	25-3/16 x 39-5/8 x 8-11/16
Net weight		kg (lb)	18.5 (41)	18.5 (41)	20 (45)	21(47)
Heat exchanger			Cross fin (Aluminium fin and copper tube)			
FAN	Type x Quantity		Sirocco fan x 1	Sirocco fan x 1	Sirocco fan x 2	Sirocco fan x 2
	External static press.	Pa	20 - <40> - <60>	20 - <40> - <60>	20 - <40> - <60>	20 - <40> - <60>
		mmH_2O	2.0 - <4.1> - <6.1>	2.0 - <4.1> - <6.1>	2.0 - <4.1> - <6.1>	2.0 - <4.1> - <6.1>
	Motor type		DC blushless motor			
	Motor output	kW	0.096	0.096	0.096	0.096
	Driving mechanism		Direct-driven			
	Airflow rate (Low-Mid-High)	m^3 / min	4.5 - 5.5 - 6.5	4.5 - 5.5 - 6.5	6.5 - 7.5 - 9.0	8.0 - 9.5 - 11.0
		L / s	75 - 92 - 108	75 - 92 - 108	108 - 125 - 150	133 - 158 - 183
		cfm	159 - 194 - 230	159 - 194 - 230	230 - 265 - 318	283 - 335 - 388
Sound pressure level (Low-Mid-High) (measured in anechoic room)		dB <A>	31 - 36 - 40 (20Pa)	31 - 36 - 40 (20Pa)	27 - 32 - 37 (20Pa)	30 - 36 - 40 (20Pa)
		dB <A>	34 - 39 - 42 (40Pa)	34 - 39 - 42 (40Pa)	30 - 35 - 41 (40Pa)	32 - 38 - 42 (40Pa)
	✻4	dB <A>	35 - 40 - 43 (60Pa)	35 - 40 - 43 (60Pa)	32 - 37 - 42 (60Pa)	35 - 39 - 44 (60Pa)
Insulation material			Polyethylene foam, Urethane foam			
Air filter			PP honeycomb fabric (washable)			
Protection device			Fuse			
Refrigerant control device			LEV			
Connectable outdoor unit			R410A CITY MULTI			
Diameter of refrigerant pipe	Liquid (R410A)	mm (in.)	ø6.35 (ø1/4) Brazed	ø6.35 (ø1/4) Brazed	ø6.35 (ø1/4) Brazed	ø6.35 (ø1/4) Brazed
	Gas (R410A)	mm (in.)	ø12.7 (ø1/2) Brazed	ø12.7 (ø1/2) Brazed	ø12.7 (ø1/2) Brazed	ø12.7 (ø1/2) Brazed
Field drain pipe size		mm (in.)	I.D. 26mm (1)<Accessory hose O.D.27mm(top end:O.D.20mm)>			
Drawing	External		IU-KB94-L081	IU-KB94-L081	IU-KB94-L081	IU-KB94-L081
	Wiring		IU-KB94-G985	IU-KB94-G985	IU-KB94-G985	IU-KB94-G985
	Refrigerant cycle		-	-	-	-
Standard attachment	Document		Installation Manual, Instruction Book			
	Accessory		Screw plate, Level adjusting screw, Strainer, Drain hose (flexible joint), Hose band			
Remark	Optional parts		-			
	Installation		Details on foundation work, duct work, insulation work, electrical wiring, power source switch, and other items shall be referred to the Installation Manual.			

Note :

	✻1 Nominal cooling conditions	✻2 Nominal cooling conditions	✻3 Nominal heating conditions
Indoor :	27˚CDB/19˚CWB (81˚FDB/66˚FWB)	27˚CDB/19.5˚CWB (81˚FDB/67˚FWB)	20˚CDB (68˚FDB)
Outdoor :	35˚CDB (95˚FDB)	35˚CDB (95˚FDB)	7˚CDB/6˚CWB (45˚FDB/43˚FWB)
Pipe length :	7.5 m (24-9/16 ft)	5 m (16-3/8 ft)	7.5 m (24-9/16 ft)
Level difference :	0 m (0 ft)	0 m (0 ft)	0 m (0 ft)

* Nominal conditions ✻1, ✻3 are subject to JIS B8615-1.
* Due to continuing improvement, above specification may be subject to change without notice.

✻4 The values are measured at the rated external static pressure.

Unit converter

kcal/h = kW x 860
Btu/h = kW x 3,412
cfm = m^3/min x 35.31
lb = kg / 0.4536

*Above specification data is subject to rounding variation.

Ref.: Spec_PFFY-P-VLRMM-E_1

PFFY

1. SPECIFICATIONS

Model			PFFY-P50VLRMM-E	PFFY-P63VLRMM-E		
Power source			1-phase 220-240V (50/60Hz)			
Cooling capacity (Nominal)	✻1	kW	5.6	7.1		
	✻1	kcal / h	4,800	6,100		
	✻1	Btu / h	19,100	24,200		
	✻2	kcal / h	5,000	6,300		
✻4	Power input	kW	0.05	0.07		
✻4	Current input	A	0.48	0.59		
Heating capacity (Nominal)	✻3	kW	6.3	8.0		
	✻3	kcal / h	5,400	6,900		
	✻3	Btu / h	21,500	27,300		
✻4	Power input	kW	0.05	0.07		
✻4	Current input	A	0.48	0.59		
External finish			Galvanized steel plate			
External dimension H x W x D		mm	639 x 1246 x 220	639 x 1246 x 220		
		in.	25-3/16 x 49-1/16 x 8-11/16	25-3/16 x 49-1/16 x 8-11/16		
Net weight		kg (lb)	25 (56)	27 (60)		
Heat exchanger			Cross fin (Aluminium fin and copper tube)			
FAN	Type x Quantity		Sirocco fan x 2	Sirocco fan x 2		
	External static press.	Pa	20 - <40> - <60>	20 - <40> - <60>		
		mmH_2O	2.0 - <4.1> - <6.1>	2.0 - <4.1> - <6.1>		
	Motor type		DC blushless motor			
	Motor output	kW	0.096	0.096		
	Driving mechanism		Direct-driven			
	Airflow rate (Low-Mid-High)	m^3 / min	10.0 - 12.0 - 14.0	11.0 - 13.0-15.5		
		L / s	167 - 200 - 233	183 - 217 - 258		
		cfm	353 - 424 - 494	388 - 459 - 547		
Sound pressure level (Low-Mid-High) (measured in anechoic room)		dB <A>	32 - 37 - 41 (20Pa)	35 - 40 - 44 (20Pa)		
		dB <A>	35 - 40 - 44 (40Pa)	36 - 42 - 47 (40Pa)		
	✻4	dB <A>	36 - 41 - 45 (60Pa)	38 - 43 - 48 (60Pa)		
Insulation material			Polyethylene foam, Urethane foam			
Air filter			PP honeycomb fabric (washable)			
Protection device			Fuse			
Refrigerant control device			LEV			
Connectable outdoor unit			R410A CITY MULTI			
Diameter of refrigerant pipe	Liquid (R410A)	mm (in.)	ø6.35 (ø1/4) Brazed	ø9.52 (ø3/8) Brazed		
	Gas (R410A)	mm (in.)	ø12.7 (ø1/2) Brazed	ø15.88 (ø5/8) Brazed		
Field drain pipe size		mm (in.)	I.D. 26mm (1)<Accessory hose O.D.27mm(top end:O.D.20mm)>			
Drawing	External		IU-KB94-L081	IU-KB94-L081		
	Wiring		IU-KB94-G985	IU-KB94-G985		
	Refrigerant cycle		-	-		
Standard attachment	Document		Installation Manual, Instruction Book			
	Accessory		Screw plate, Level adjusting screw, Strainer, Drain hose (flexible joint), Hose band			
Remark	Optional parts		-			
	Installation		Details on foundation work, duct work, insulation work, electrical wiring, power source switch, and other items shall be referred to the Installation Manual.			

Note :

	✻1 Nominal cooling conditions	✻2 Nominal cooling conditions	✻3 Nominal heating conditions
Indoor :	27˚CDB/19˚CWB (81˚FDB/66˚FWB)	27˚CDB/19.5˚CWB (81˚FDB/67˚FWB)	20˚CDB (68˚FDB)
Outdoor :	35˚CDB (95˚FDB)	35˚CDB (95˚FDB)	7˚CDB/6˚CWB (45˚FDB/43˚FWB)
Pipe length :	7.5 m (24-9/16 ft)	5 m (16-3/8 ft)	7.5 m (24-9/16 ft)
Level difference :	0 m (0 ft)	0 m (0 ft)	0 m (0 ft)

* Nominal conditions ✻1, ✻3 are subject to JIS B8615-1.
* Due to continuing improvement, above specification may be subject to change without notice.

✻4 The values are measured at the rated external static pressure.

Unit converter

kcal/h = kW x 860
Btu/h = kW x 3,412
cfm = m^3/min x 35.31
lb = kg / 0.4536

*Above specification data is subject to rounding variation.

Ref.: Spec_PFFY-P-VLRMM-E_2

PFFY

2. EXTERNAL DIMENSIONS

PFFY-P20,25,32,40VKM-E

Drw. : IU-BK01-B517
Unit : mm

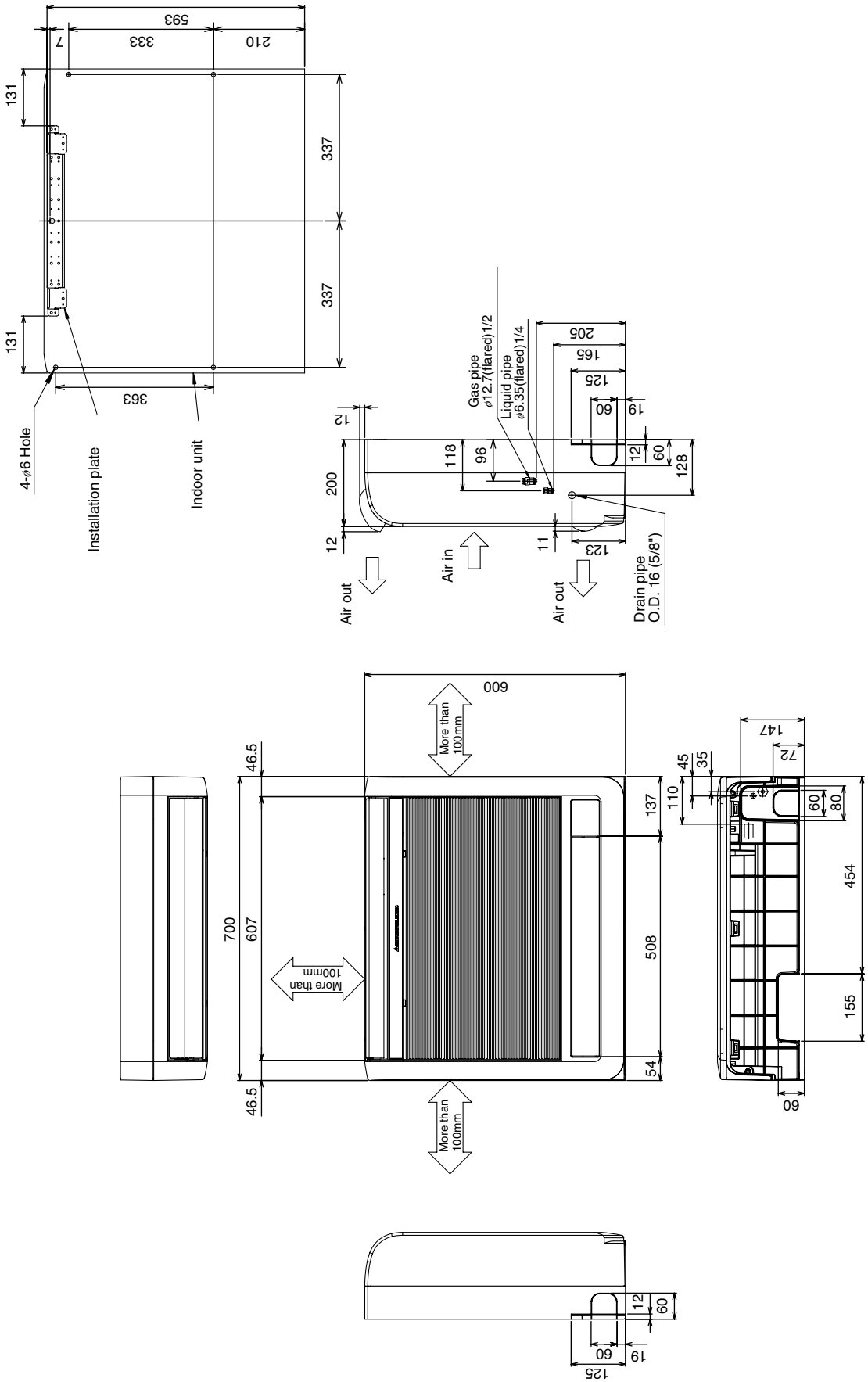

PFFY

PFFY-P20,25,32,40,50,63VLEM-E

Drw. : IU-W65-3950
Unit : mm

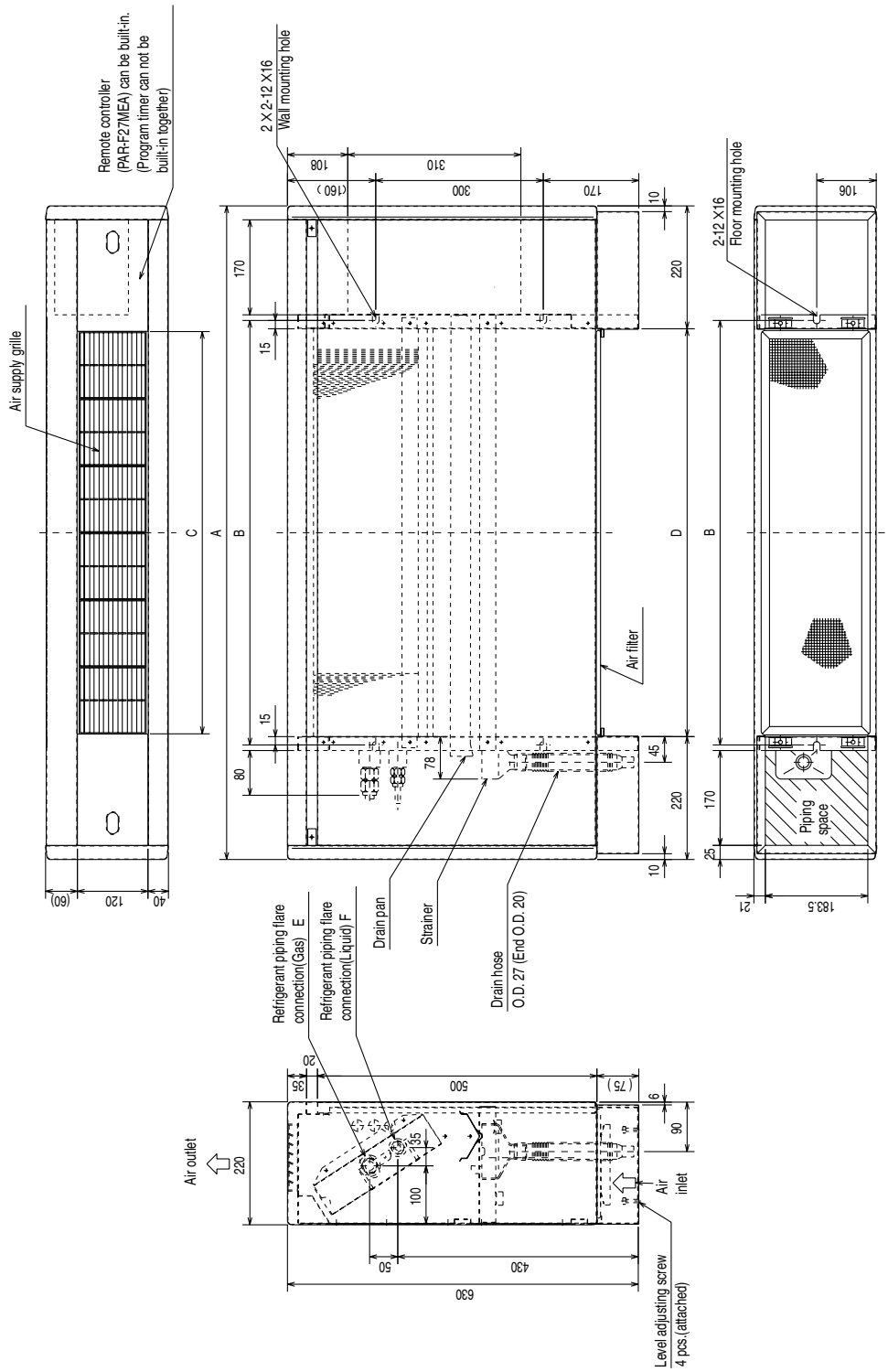

Dimensions

Model	A	B	C	D	E(Gas)	F(Liquid)
PFFY-P20VLEM-E	1050	640	600	610	ø12.7	ø6.35
PFFY-P25VLEM-E	1050	640	600	610	ø12.7	ø6.35
PFFY-P32VLEM-E	1170	760	720	730	ø12.7	ø6.35
PFFY-P40VLEM-E	1170	760	720	730	ø12.7	ø6.35
PFFY-P50VLEM-E	1410	1000	960	970	ø12.7	ø6.35
PFFY-P63VLEM-E	1410	1000	960	970	ø15.88	ø9.52

PFFY

2. EXTERNAL DIMENSIONS

PFFY-P20,25,32,40,50,63VLRM-E

Drw. : IU-W65-3951
Unit : mm

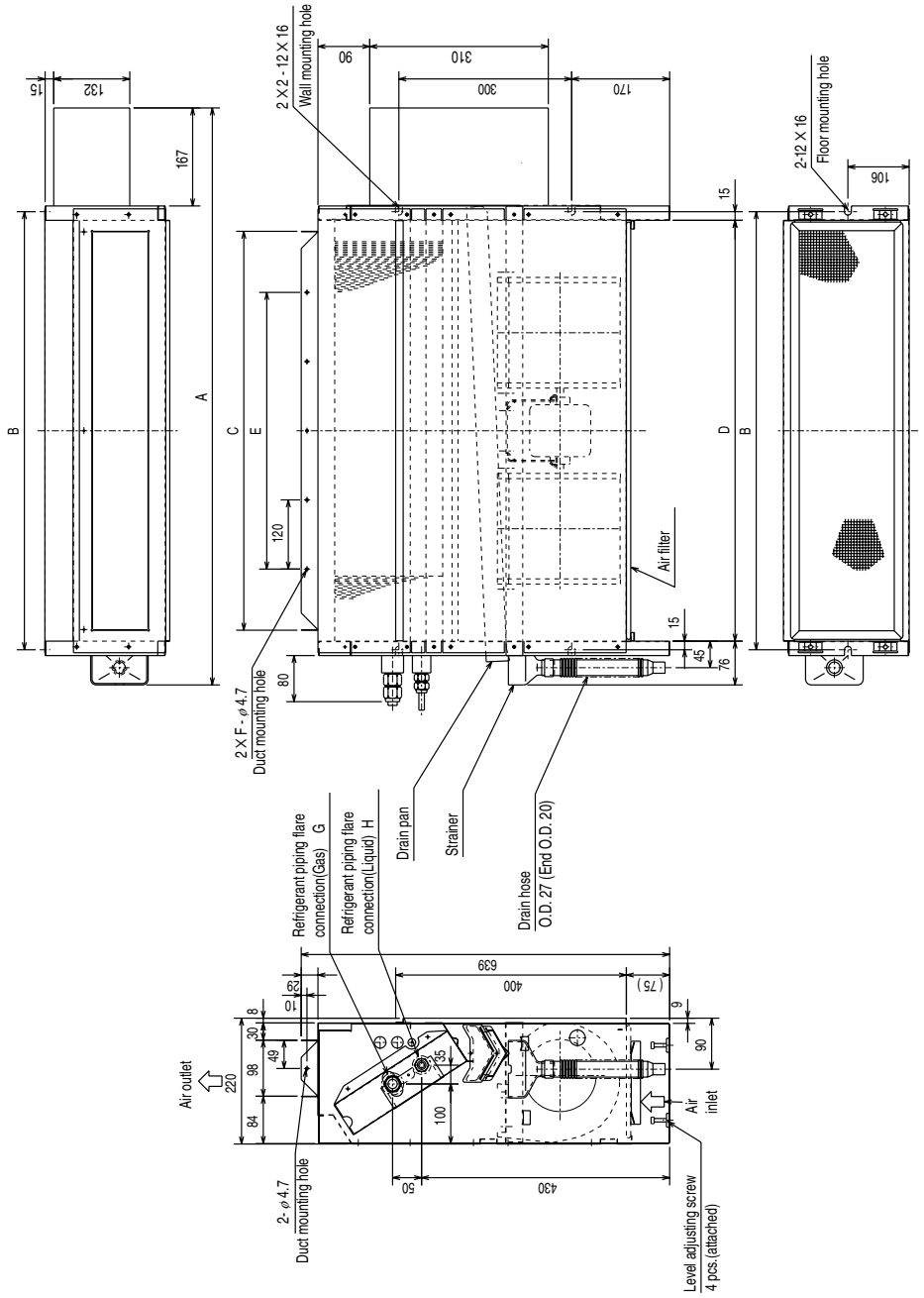

Dimensions

Model	A	B	C	D	E	F	G(Gas)	H(Liquid)
PFFY-P20VLRM-E	886	640	572	610	360	4	ø12.7	ø6.35
PFFY-P25VLRM-E	886	640	572	610	360	4	ø12.7	ø6.35
PFFY-P32VLRM-E	1006	760	692	730	480	5	ø12.7	ø6.35
PFFY-P40VLRM-E	1006	760	692	730	480	5	ø12.7	ø6.35
PFFY-P50VLRM-E	1246	1000	932	970	720	7	ø12.7	ø6.35
PFFY-P63VLRM-E	1246	1000	932	970	720	7	ø15.88	ø9.52

2. EXTERNAL DIMENSIONS

PFFY-P20,25,32,40,50,63VLRMM-E

Drw. : IU-KB94-L081
Unit : mm

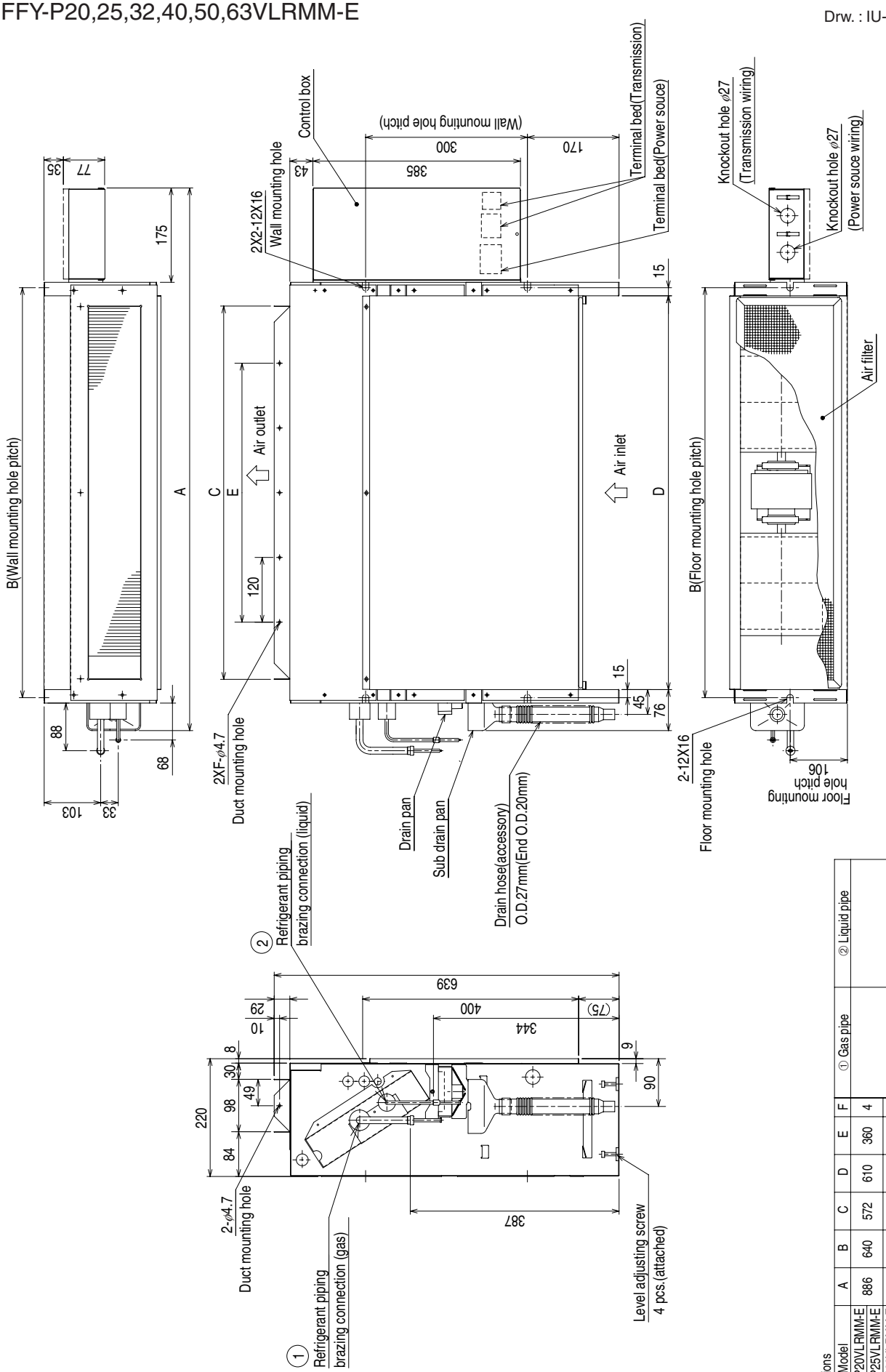

Dimensions

Model	A	B	C	D	E	F	① Gas pipe	② Liquid pipe
PFFY-P20VLRMM-E	886	640	572	610	360	4	φ12.7	φ6.35
PFFY-P25VLRMM-E								
PFFY-P32VLRMM-E	1006	760	692	730	480	5		
PFFY-P40VLRMM-E								
PFFY-P50VLRMM-E	1246	1000	932	970	720	7	φ15.88	φ9.52
PFFY-P63VLRMM-E								

PFFY

PFFY-P20,25,32,40VKM-E

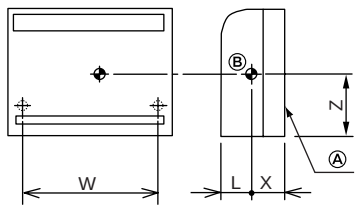

Ⓐ Wall hole for fixing
Ⓑ Center of gravity

(mm)[in]

Model name	W	L	X	Z
PFFY-P20VKM-E	674 [26-9/16]	85 [3-3/8]	115 [4-9/16]	330 [13]
PFFY-P25VKM-E	674 [26-9/16]	85 [3-3/8]	115 [4-9/16]	330 [13]
PFFY-P32VKM-E	674 [26-9/16]	85 [3-3/8]	115 [4-9/16]	330 [13]
PFFY-P40VKM-E	674 [26-9/16]	85 [3-3/8]	115 [4-9/16]	330 [13]

PFFY-P20,25,32,40,50,63VLEM-E

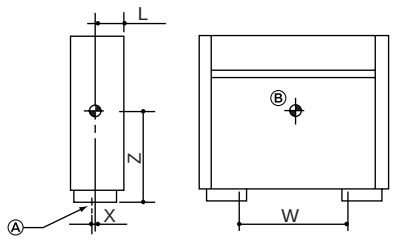

Ⓐ Floor hole for fixing
Ⓑ Center of gravity

(mm)[in]

Model name	W	L	X	Z
PFFY-P20VLEM-E	640 [25-1/4]	100 [3-15/16]	17 [11/16]	335 [13-1/4]
PFFY-P25VLEM-E	640 [25-1/4]	100 [3-15/16]	17 [11/16]	335 [13-1/4]
PFFY-P32VLEM-E	760 [29-15/16]	100 [3-15/16]	17 [11/16]	335 [13-1/4]
PFFY-P40VLEM-E	760 [29-15/16]	100 [3-15/16]	17 [11/16]	335 [13-1/4]
PFFY-P50VLEM-E	1000 [39-3/8]	100 [3-15/16]	17 [11/16]	335 [13-1/4]
PFFY-P63VLEM-E	1000 [39-3/8]	100 [3-15/16]	17 [11/16]	335 [13-1/4]

PFFY-P20,25,32,40,50,63VLRM-E

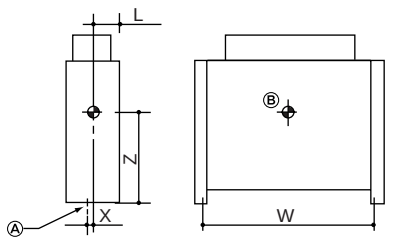

Ⓐ Floor hole for fixing
Ⓑ Center of gravity

(mm)[in]

Model name	W	L	X	Z
PFFY-P20VLRM-E	640 [25-1/4]	100 [3-15/16]	17 [11/16]	335 [13-1/4]
PFFY-P25VLRM-E	640 [25-1/4]	100 [3-15/16]	17 [11/16]	335 [13-1/4]
PFFY-P32VLRM-E	760 [29-15/16]	100 [3-15/16]	17 [11/16]	335 [13-1/4]
PFFY-P40VLRM-E	760 [29-15/16]	100 [3-15/16]	17 [11/16]	335 [13-1/4]
PFFY-P50VLRM-E	1000 [39-3/8]	100 [3-15/16]	17 [11/16]	335 [13-1/4]
PFFY-P63VLRM-E	1000 [39-3/8]	100 [3-15/16]	17 [11/16]	335 [13-1/4]

3. CENTER OF GRAVITY

PFFY-P20,25,32,40,50,63VLRMM-E

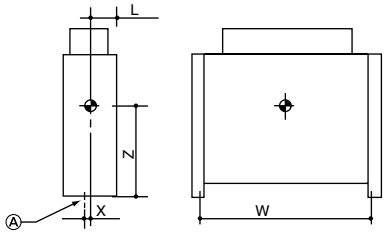

Ⓐ Floor hole for fixing

(mm)[in]

Model name	W	L	X	Z
PFFY-P20VLRMM-E	640 [25-1/4]	100 [3-15/16]	17 [11/16]	335 [13-1/4]
PFFY-P25VLRMM-E	640 [25-1/4]	100 [3-15/16]	17 [11/16]	335 [13-1/4]
PFFY-P32VLRMM-E	760 [29-15/16]	100 [3-15/16]	17 [11/16]	335 [13-1/4]
PFFY-P40VLRMM-E	760 [29-15/16]	100 [3-15/16]	17 [11/16]	335 [13-1/4]
PFFY-P50VLRMM-E	1000 [39-3/8]	100 [3-15/16]	17 [11/16]	335 [13-1/4]
PFFY-P63VLRMM-E	1000 [39-3/8]	100 [3-15/16]	17 [11/16]	335 [13-1/4]

PFFY-P20,25,32,40VKM-E

Drw. : IU-RG79-V367

[LEGEND]

SYMBOL		NAME		SYMBOL	NAME		SYMBOL		NAME	
I. B		INDOOR CONTROLLER BOARD		MF1	FAN MOTOR (UPPER)		TH23		PIPE TEMP. DETECTION/GAS (0℃/15kΩ, 25℃/5.4kΩ)	
	CN32	CONNECTOR	REMOTE SWITCH	MF2	FAN MOTOR (LOWER)					
	CN51		CENTRALLY CONTROL	MV1	VANE MOTOR		A. B		ADDRESS BOARD	
	CN52		REMOTE INDICATION	MV2	DAMPER MOTOR			SW1	SWITCH	MODE SELECTION
	SW2	SWITCH	CAPACITY CODE	LS	DAMPER LIMIT SWITCH (CLOSE)			SW11		ADDRESS SETTING 1ST DIGIT
	SW3		MODE SELECTION	LEV	LINEAR EXPANSION VALVE			SW12		ADDRESS SETTING 2ND DIGIT
	SW4		MODEL SELECTOR	TB2	TERMINAL BLOCK	POWER SUPPLY		SW14		CONNECTION NO.
	ZNR	VARISTOR		TB5		TRANSMISSION		SWC		AIR OUTLET SELECTION
	FUSE	FUSE (T6.3AL250V)		TH21	THERMISTOR	ROOM TEMP. DETECTION (0℃/15kΩ, 25℃/5.4kΩ)				
	LED1	POWER SUPPLY (I.B)								
	LED2	POWER SUPPLY (I.B)		TH22		PIPE TEMP. DETECTION/LIQUID (0℃/15kΩ, 25℃/5.4kΩ)				

NOTES

1. At servicing for outdoor unit, always follow the wiring diagram of outdoor unit.
2. In case of connecting MA-Remote controller, please connect MA remote controller cable in an accessory to the connecter 1 2. (Remote controller wire is non-polar.)
3. In case of using M-NET, please connect to TB5. (Transmission line is non-polar.)
4. Symbol [S] of TB5 is the shield wire connection.
5. Symbols used in wiring diagram above are, ◎: terminal block, ▭▭▭: connector.
6. The setting of the SW2 dip switches differs in the capacity for the detail, refer to the fig:※1.

LED on indoor board for service

MARK	MEANING	FUNCTION
LED1	Main power supply	Main power supply (Indoor unit:220-240V) power on ➔ lamp is lit
LED2	Power supply for MA-Remote controller	Power supply for MA-remote controller on ➔ lamp is lit

<fig:※1>

MODELS	SW2
P20	ON OFF 1 2 3 4 5 6
P25	ON OFF 1 2 3 4 5 6
P32	ON OFF 1 2 3 4 5 6
P40	ON OFF 1 2 3 4 5 6

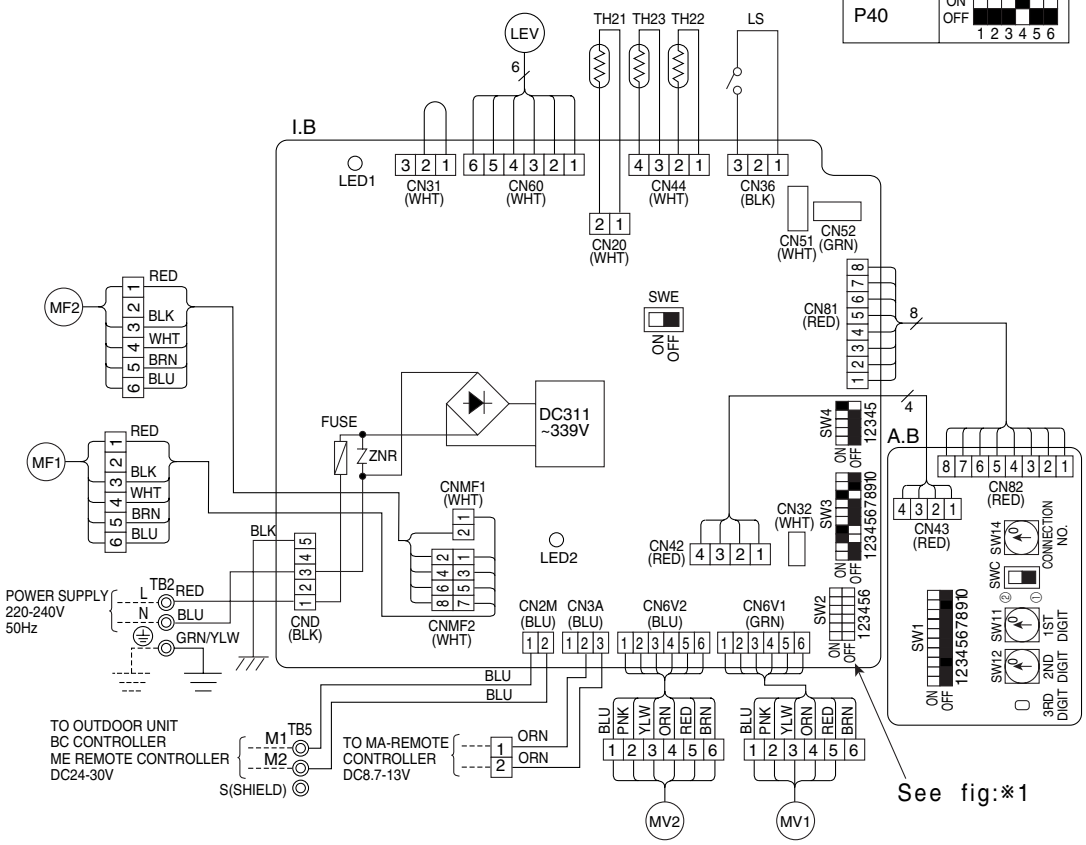

PFFY-P20,25,32,40,50,63VLEM-E,VLRM-E

Drw. : IU-W65-3960

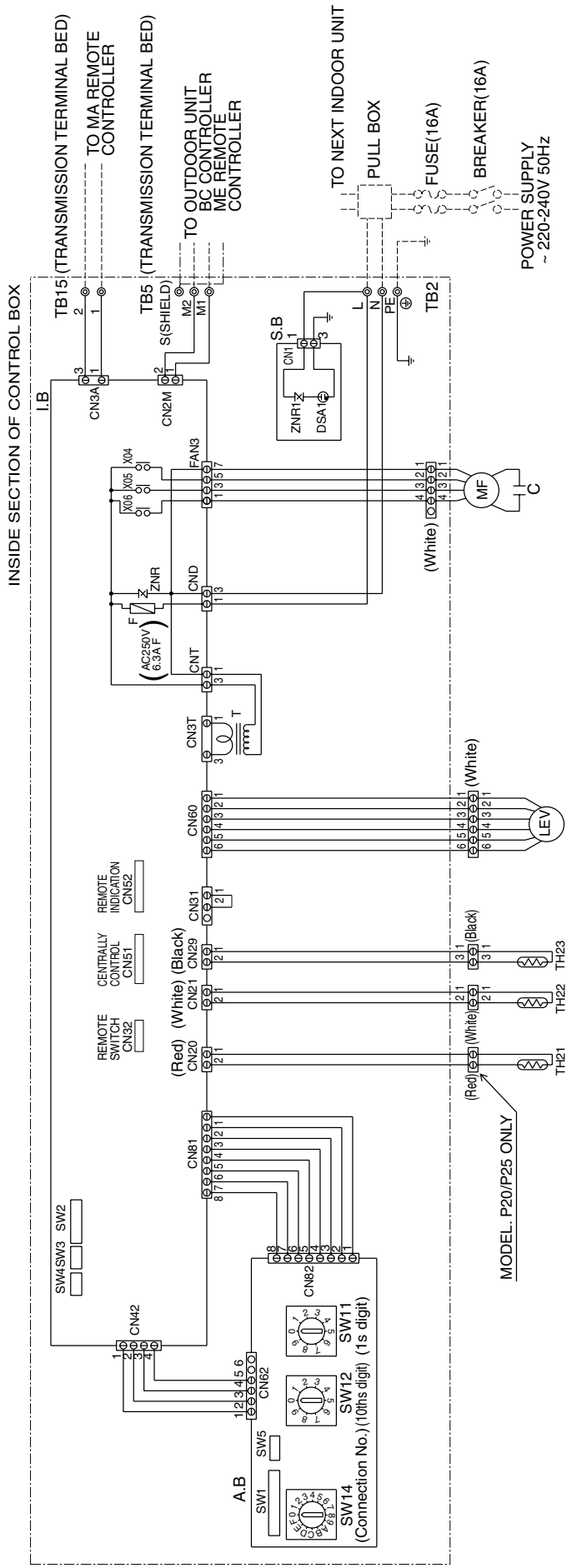

SYMBOL EXPLANATION

SYMBOL	NAME	SYMBOL	NAME
MF	Fan motor	TH22	Thermistor (piping temp.detection/liquid)
C	Capacitor (for MF)	TH23	Thermistor (piping temp.detection/gas)
I.B	Indoor controller board	SW11(A.B)	Switch (1s digit address set)
A.B	Address board	SW12(A.B)	Switch (10ths digit address set)
TB2	Power source terminal bed	SW14(A.B)	Switch (connection No.set)
TB5	Transmission terminal bed	SW1(A.B)	Switch(for mode selection)
TB15	Transmission terminal bed	SW2(I.B)	Switch(for capacity code)
F	Fuse AC250V 6.3A F	SW3(I.B)	Switch(for mode selection)
T	Transformer	SW4(I.B)	Switch(for model selection)
LEV	Electronic linear expan. valve	SW5(A.B)	Switch(for voltage selection)
S.B	Surge absorber board	X04~06	Aux.relay
TH21	Thermistor (inlet temp.detection)		

PFFY

PFFY-P20,25,32,40,50,63VLRMM-E

Drw. : IU-KB94-G985

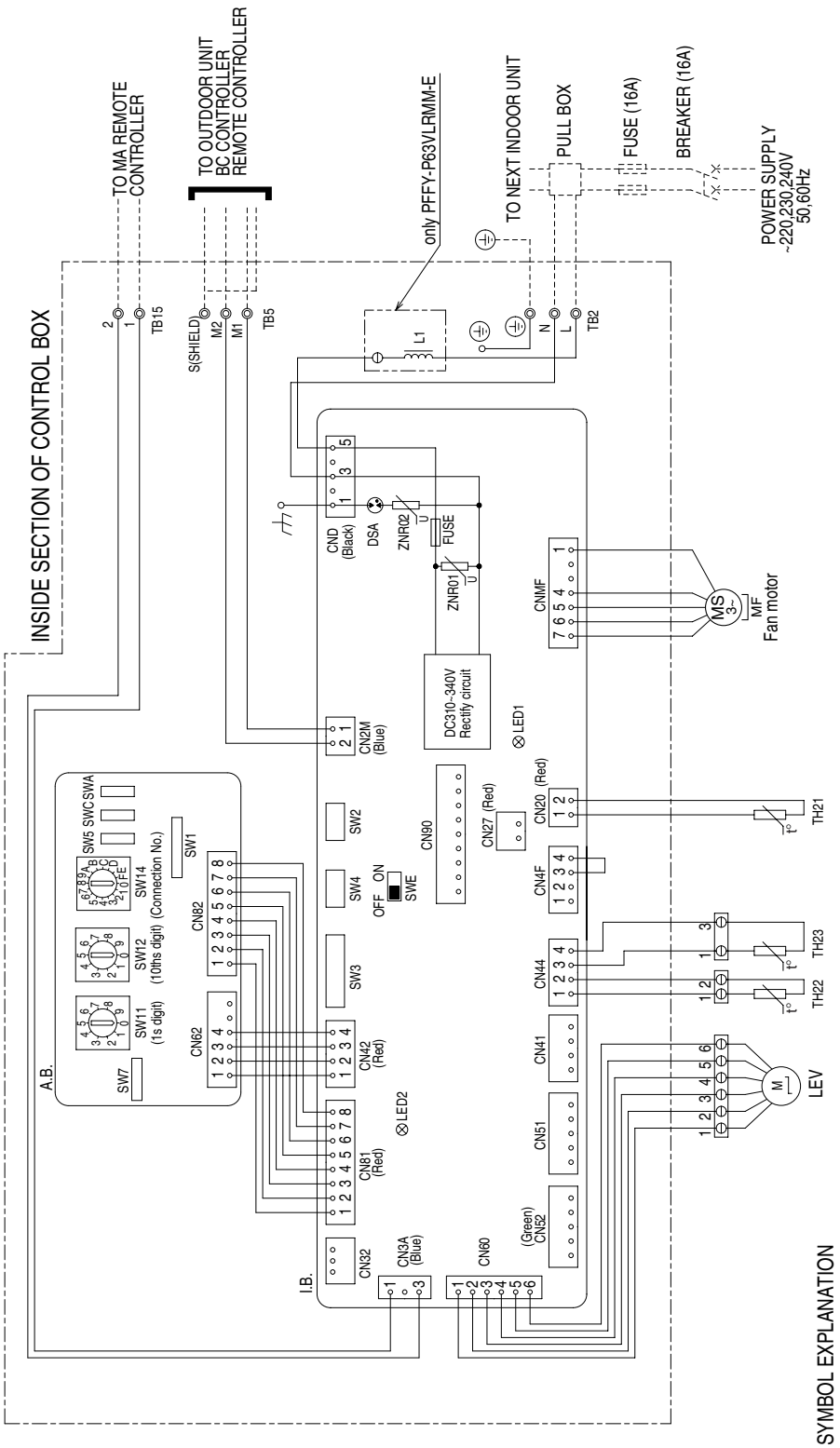

NOTE:1.The wirings to TB2,TB5,TB15 shown in dotted line are field work.
2.Mark ◎ indicates terminal bed, ⊖ connector.

OPERATION OF LED FOR INDOOR CIRCUIT BOARD SERVICE

SYMBOL	LED operation under normal state
LED1	At applying main power source → Lighting
LED2	At receiving MA transmission power source → Lighting

SYMBOL EXPLANATION

SYMBOL	NAME	SYMBOL	NAME
I.B.	Indoor controller board	A.B.	Address board
FUSE	Fuse <AC250V 6.3A>	SW1	Switch (for mode selection)
ZNR01,02	Varistor	SW5	Switch (for mode selection)
DSA	Arrester	SW7	Switch (for model selection)
CN27	Connector (Damper)	SW11	Switch (1s digit address set)
CN32	Connector (Remote switch)	SW12	Switch (10ths digit address set)
CN41	Connector (HA terminal-A)	SW14	Switch (connection No.set)
CN51	Connector (Centrally control)	SWA	Switch (for static pressure selection)
CN52	Connector (Remote indication)	SWC	Switch (for static pressure selection)
CN90	Connector (Wireless)	TB2	Power source terminal bed
SW2	Switch (for capacity code)	TB5	Transmission terminal bed
SW3	Switch (for mode selection)	TB15	Transmission terminal bed
SW4	Switch (for model selection)	TH21	Thermistor (inlet air temp.detection)
SWE	Connector (emergency operation)	TH22	Thermistor (piping temp.detection/liquid)
L1	AC reactor(Power factor improvement)	TH23	Thermistor (piping temp.detection/gas)
		LEV	Electronic linear expan.valve

PFFY

5. SOUND LEVELS

5-1. Sound levels

PFFY-P-VKM-E,VLEM-E,VLRM-E

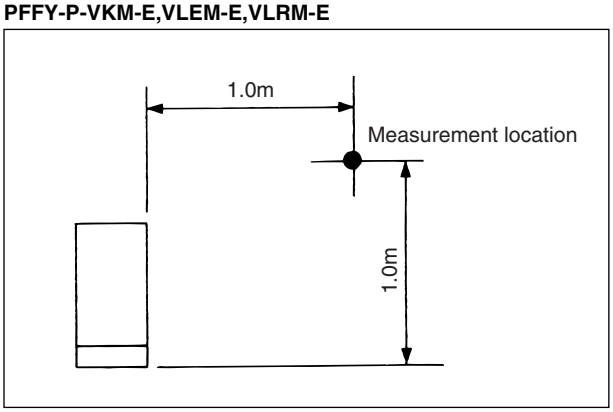

* Measured in anechoic room.

Sound level at anechoic room : Low-High

	Sound level dB (A)
PFFY-P20VKM-E	27-31-34-37
PFFY-P25VKM-E	28-32-35-38
PFFY-P32VKM-E	28-32-35-38
PFFY-P40VKM-E	35-38-42-44
PFFY-P20VLEM-E PFFY-P20VLRM-E PFFY-P25VLEM-E PFFY-P25VLRM-E	34-40
PFFY-P32VLEM-E PFFY-P32VLRM-E	35-40
PFFY-P40VLEM-E PFFY-P40VLRM-E PFFY-P50VLEM-E PFFY-P50VLRM-E	38-43
PFFY-P63VLEM-E PFFY-P63VLRM-E	40-46

PFFY-P-VLRMM-E

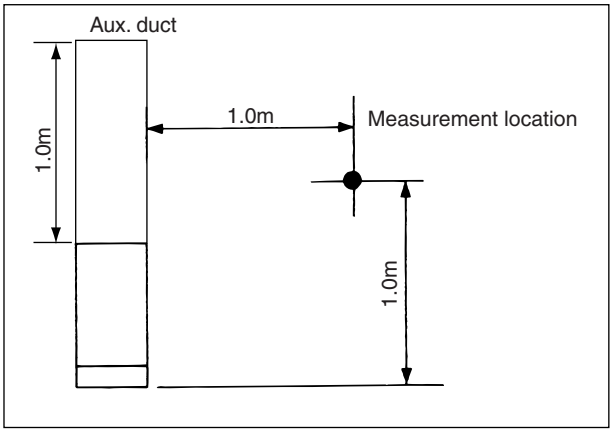

* Measured in anechoic room.

Sound level at anechoic room : Low-middle-High

	Sound level dB (A)		
	20Pa	40Pa	60Pa
PFFY-P20VLRMM-E	31-36-40	34-39-42	35-40-43
PFFY-P25VLRMM-E	31-36-40	34-39-42	35-40-43
PFFY-P32VLRMM-E	27-32-37	30-35-41	32-37-42
PFFY-P40VLRMM-E	30-36-40	32-38-42	35-39-44
PFFY-P50VLRMM-E	32-37-41	35-40-44	36-41-45
PFFY-P63VLRMM-E	35-40-44	36-42-47	38-43-48

5-2. NC curves

PFFY-P20VKM-E
External static pressure : 0Pa
Power source : 220,230,240V, 50Hz

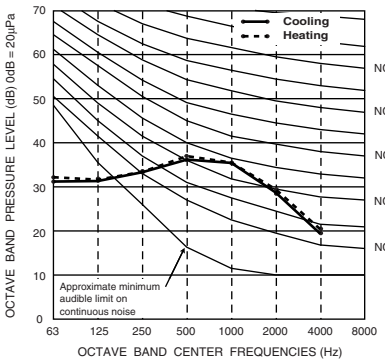

PFFY-P25,32VKM-E
External static pressure : 0Pa
Power source : 220,230,240V, 50Hz

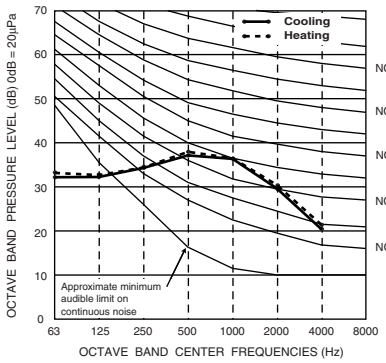

PFFY-P40VKM-E
External static pressure : 0Pa
Power source : 220,230,240V, 50Hz

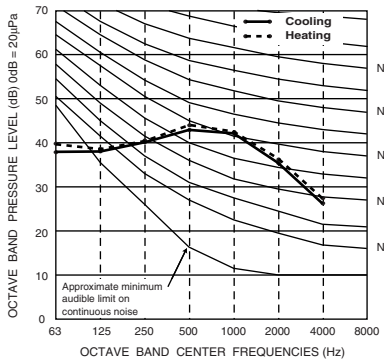

PFFY-P20,25VLEM-E,VLRM-E
External static pressure : 0Pa
Power source : 220,230,240V, 50Hz / 208,220,230V, 60Hz

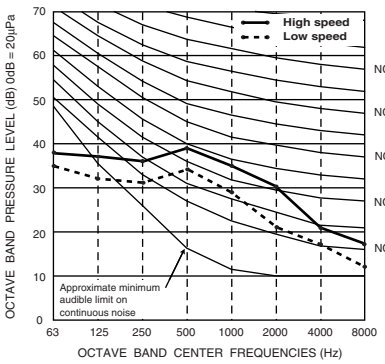

PFFY-P32VLEM-E,VLRM-E
External static pressure : 0Pa
Power source : 220,230,240V, 50Hz / 208,220,230V, 60Hz

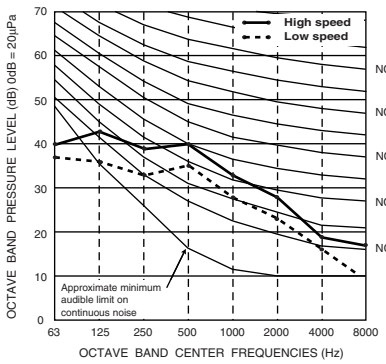

PFFY-P40VLEM-E,VLRM-E
External static pressure : 0Pa
Power source : 220,230,240V, 50Hz / 208,220,230V, 60Hz

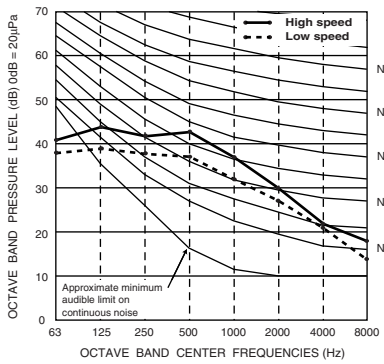

PFFY

5. SOUND LEVELS

5-2. NC curves

PFFY-P50VLEM-E,VLRM-E
External static pressure : 0Pa
Power source : 220,230,240V, 50Hz / 208,220,230V, 60Hz

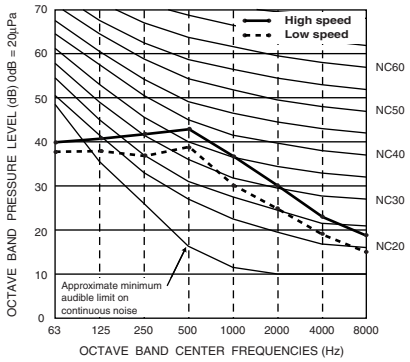

PFFY-P63VLEM-E,VLRM-E
External static pressure : 0Pa
Power source : 220,230,240V, 50Hz / 208,220,230V, 60Hz

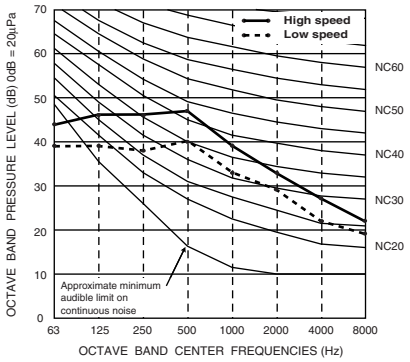

PFFY-P20,25VLRMM-E
External static pressure : 20Pa
Power source : 220,230,240V, 50/60Hz

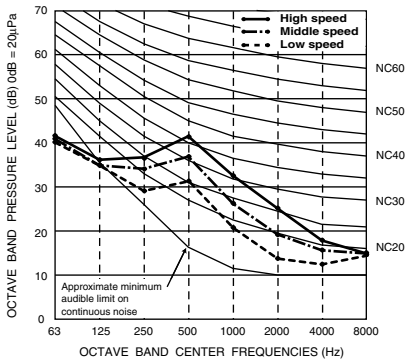

PFFY-P20,25VLRMM-E
External static pressure : 40Pa
Power source : 220,230,240V, 50/60Hz

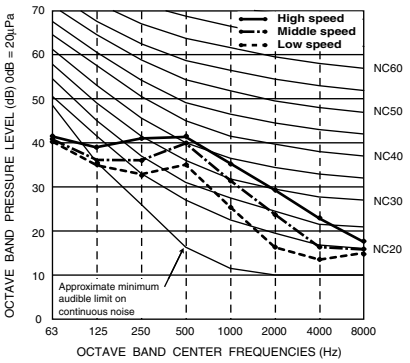

PFFY-P20,25VLRMM-E
External static pressure : 60Pa
Power source : 220,230,240V, 50/60Hz

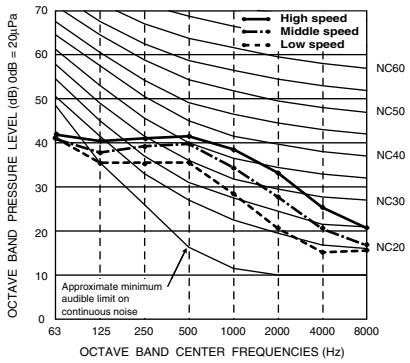

PFFY-P32VLRMM-E
External static pressure : 20Pa
Power source : 220,230,240V, 50/60Hz

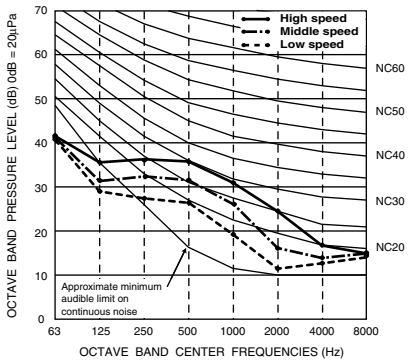

PFFY-P32VLRMM-E
External static pressure : 40Pa
Power source : 220,230,240V, 50/60Hz

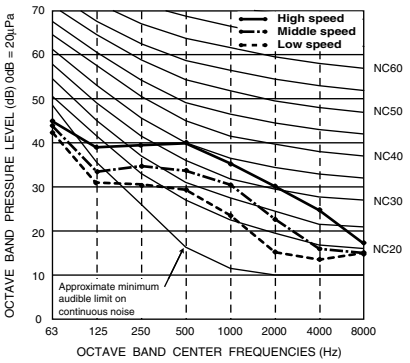

PFFY-P32VLRMM-E
External static pressure : 60Pa
Power source : 220,230,240V, 50/60Hz

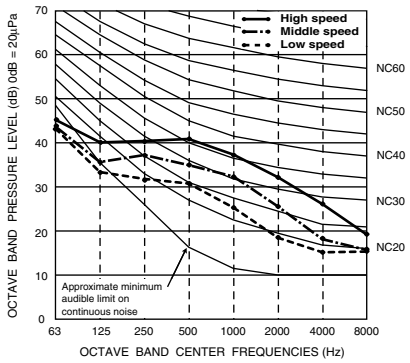

PFFY-P40VLRMM-E
External static pressure : 20Pa
Power source : 220,230,240V, 50/60Hz

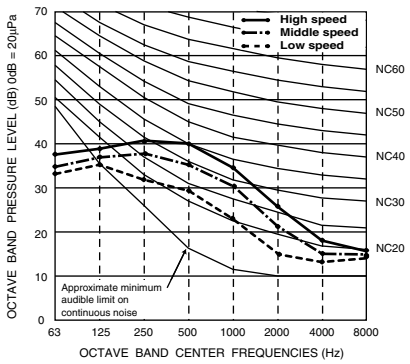

PFFY-P40VLRMM-E
External static pressure : 40Pa
Power source : 220,230,240V, 50/60Hz

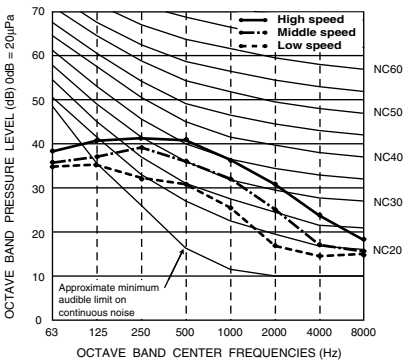

PFFY-P40VLRMM-E
External static pressure : 60Pa
Power source : 220,230,240V, 50/60Hz

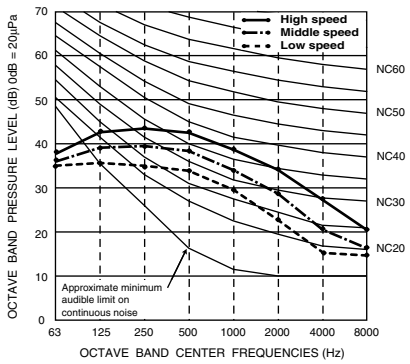

5. SOUND LEVELS

5-2. NC curves

PFFY-P50VLRMM-E
External static pressure : 20Pa
Power source : 220,230,240V, 50/60Hz

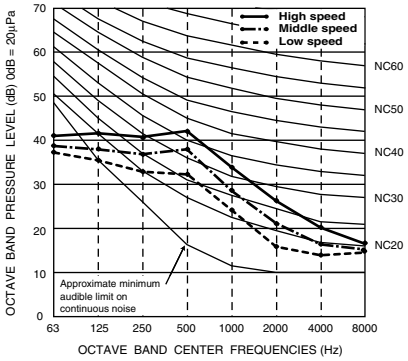

PFFY-P50VLRMM-E
External static pressure : 40Pa
Power source : 220,230,240V, 50/60Hz

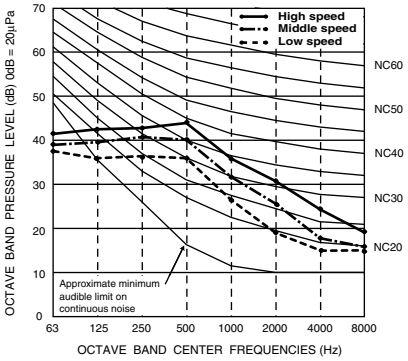

PFFY-P50VLRMM-E
External static pressure : 60Pa
Power source : 220,230,240V, 50/60Hz

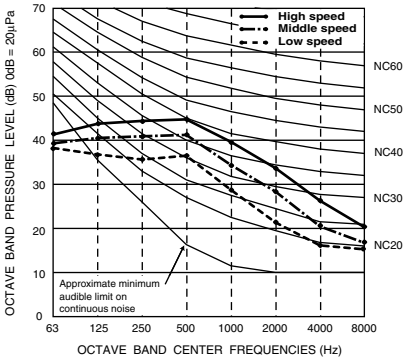

PFFY-P63VLRMM-E
External static pressure : 20Pa
Power source : 220,230,240V, 50/60Hz

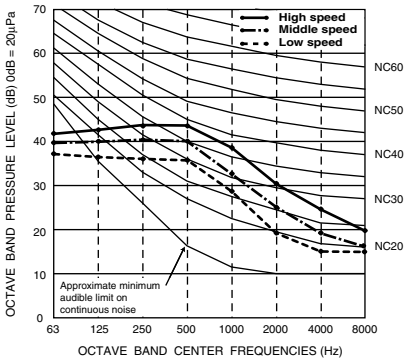

PFFY-P63VLRMM-E
External static pressure : 40Pa
Power source : 220,230,240V, 50/60Hz

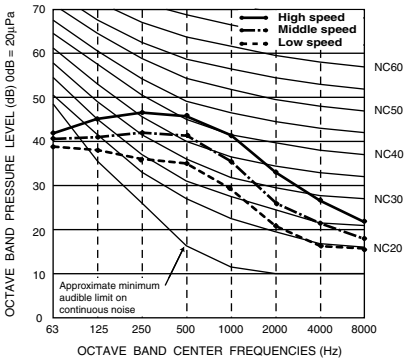

PFFY-P63VLRMM-E
External static pressure : 60Pa
Power source : 220,230,240V, 50/60Hz

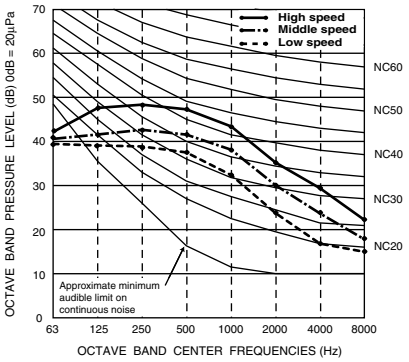

PFFY

5. SOUND LEVELS

5-3. Fan characteristics curves

PFFY-P20,25VLRMM-E
External static pressure : 20Pa
Power source : 220,230,240V, 50/60Hz

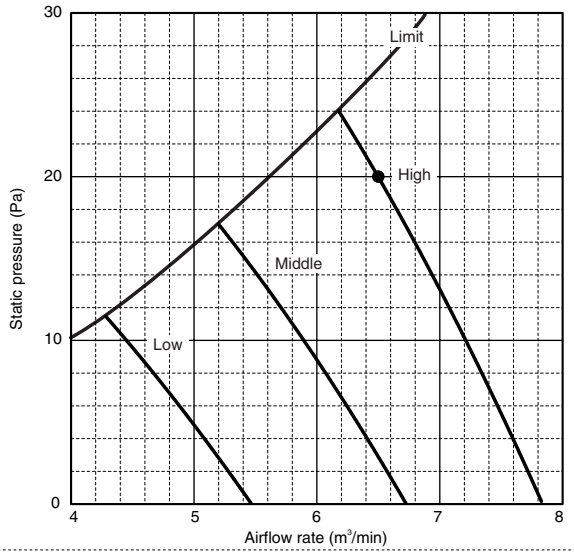

PFFY-P20,25VLRMM-E
External static pressure : 40Pa
Power source : 220,230,240V, 50/60Hz

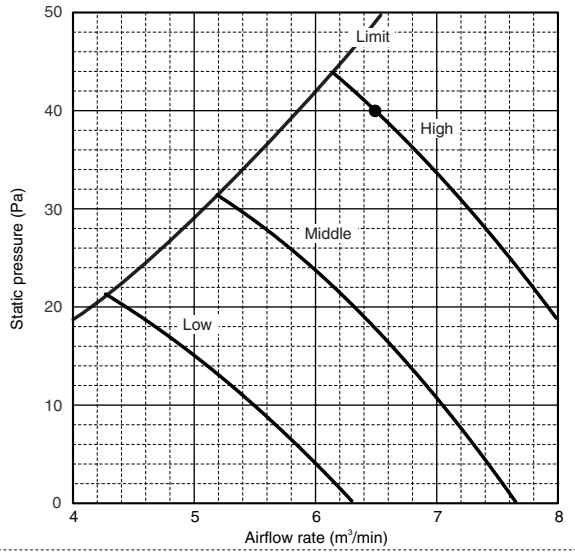

PFFY-P20,25VLRMM-E
External static pressure : 60Pa
Power source : 220,230,240V, 50/60Hz

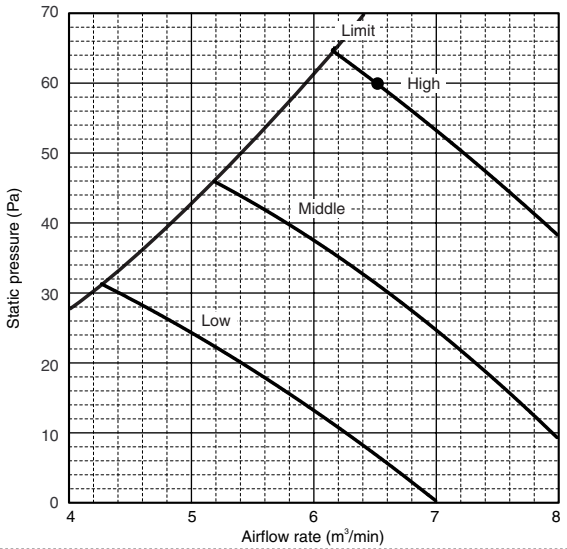

PFFY-P32VLRMM-E
External static pressure : 20Pa
Power source : 220,230,240V, 50/60Hz

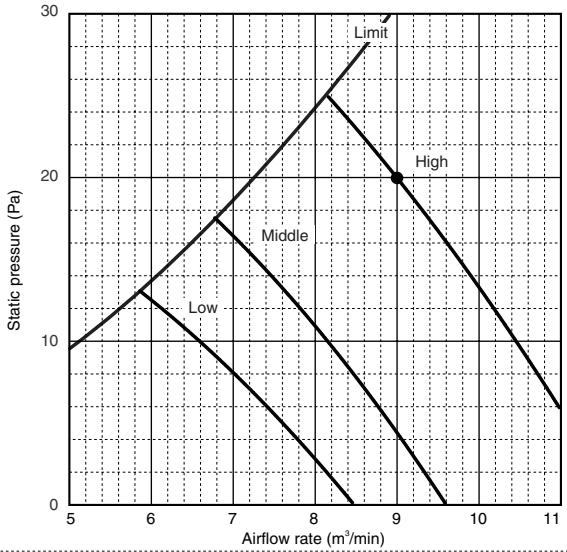

PFFY-P32VLRMM-E
External static pressure : 40Pa
Power source : 220,230,240V, 50/60Hz

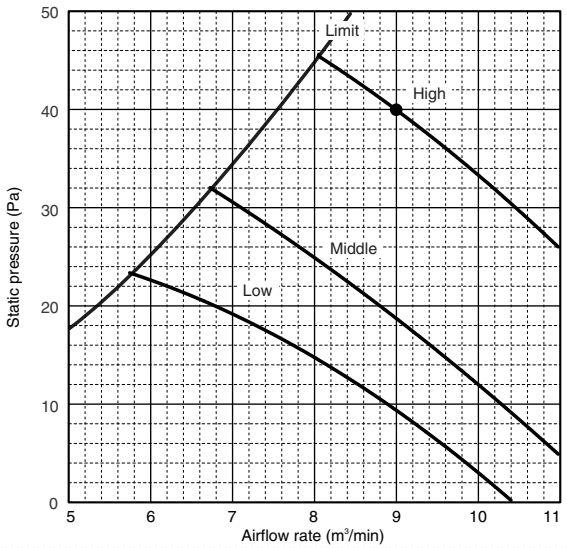

PFFY-P32VLRMM-E
External static pressure : 60Pa
Power source : 220,230,240V, 50/60Hz

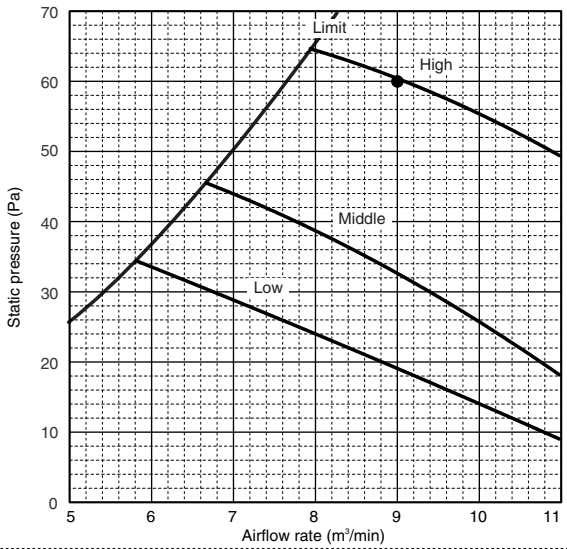

5-3. Fan characteristics curves

PFFY-P40VLRMM-E
External static pressure : 20Pa
Power source : 220,230,240V, 50/60Hz

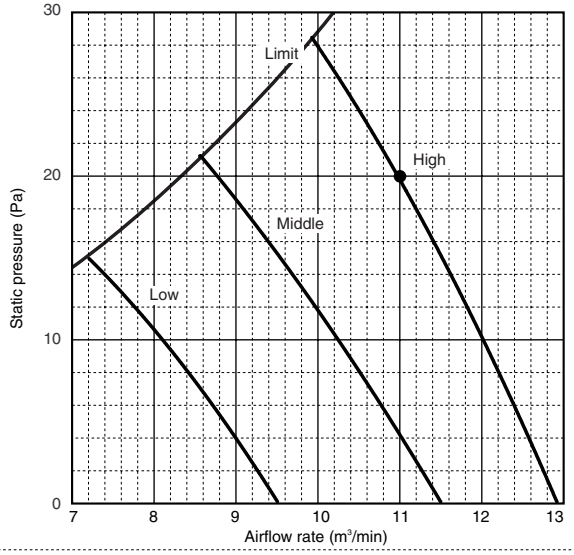

PFFY-P40VLRMM-E
External static pressure : 40Pa
Power source : 220,230,240V, 50/60Hz

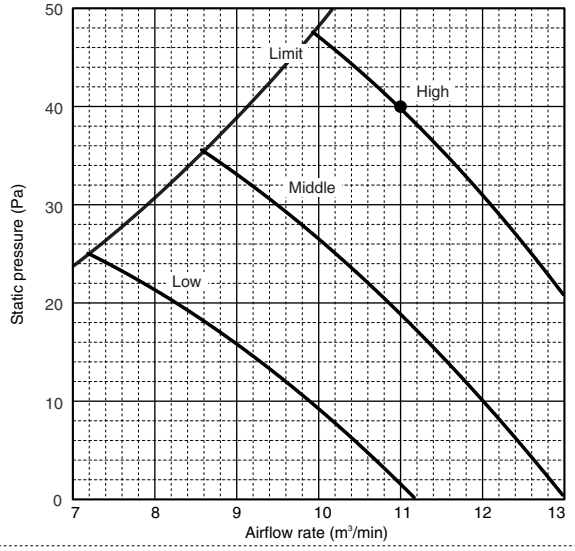

PFFY-P40VLRMM-E
External static pressure : 60Pa
Power source : 220,230,240V, 50/60Hz

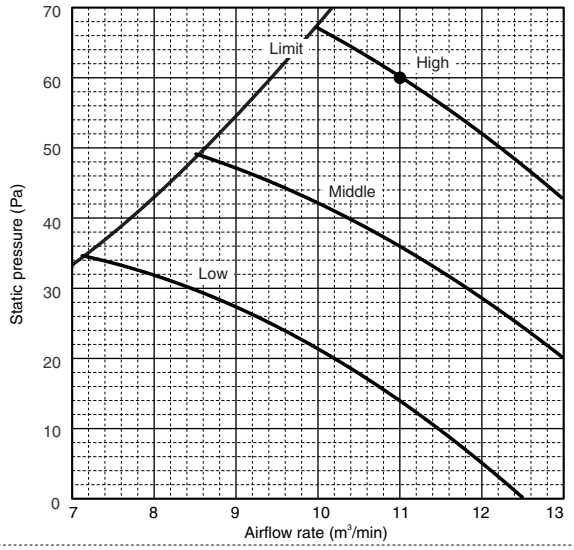

PFFY-P50VLRMM-E
External static pressure : 20Pa
Power source : 220,230,240V, 50/60Hz

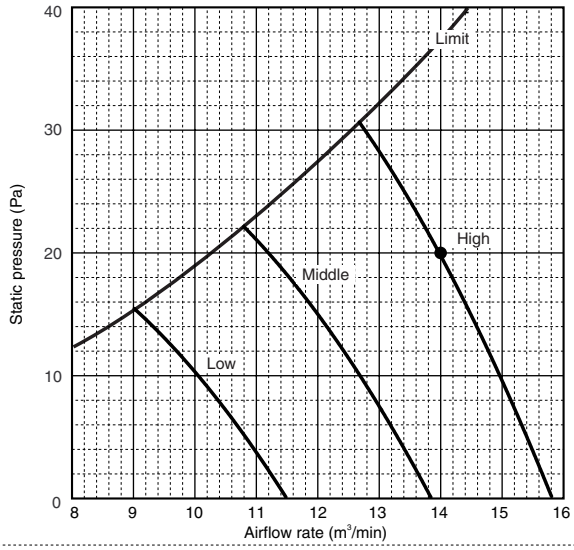

PFFY-P50VLRMM-E
External static pressure : 40Pa
Power source : 220,230,240V, 50/60Hz

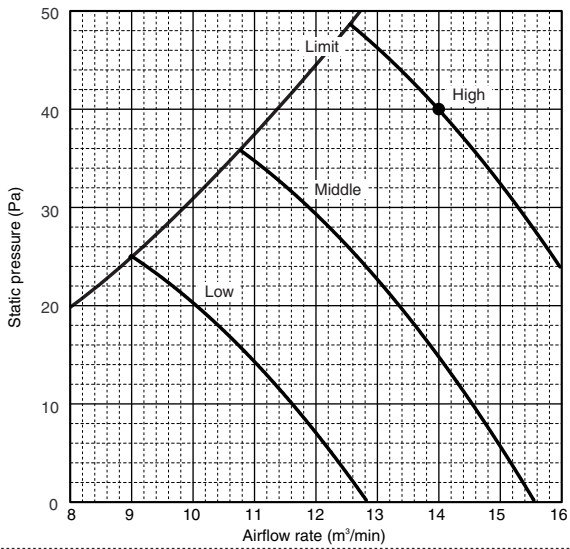

PFFY-P50VLRMM-E
External static pressure : 60Pa
Power source : 220,230,240V, 50/60Hz

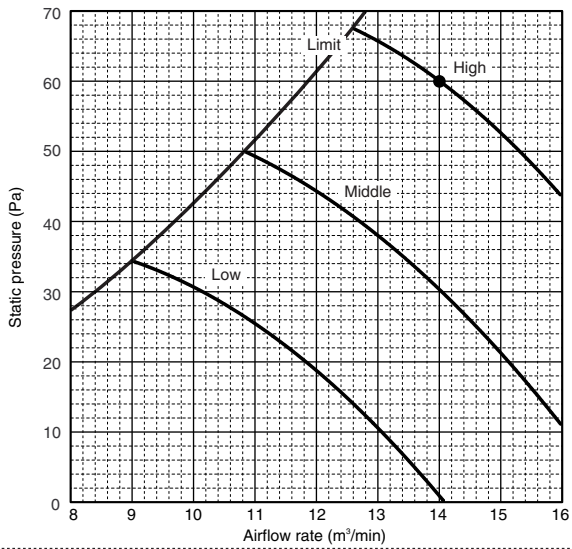

PFFY

5. SOUND LEVELS

5-3. Fan characteristics curves

PFFY-P63VLRMM-E
External static pressure : 20Pa
Power source : 220,230,240V, 50/60Hz

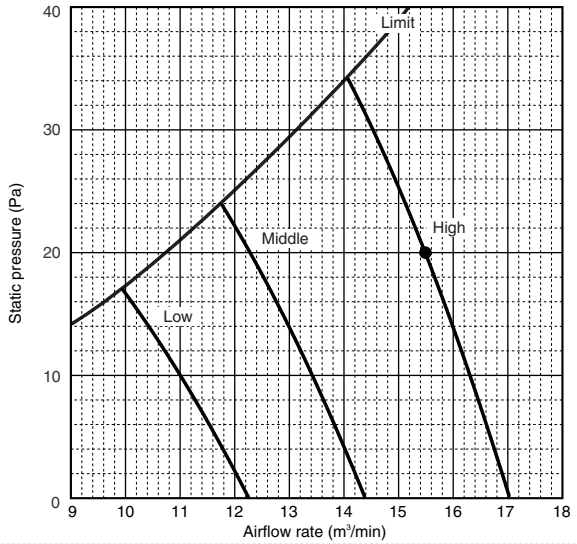

PFFY-P63VLRMM-E
External static pressure : 40Pa
Power source : 220,230,240V, 50/60Hz

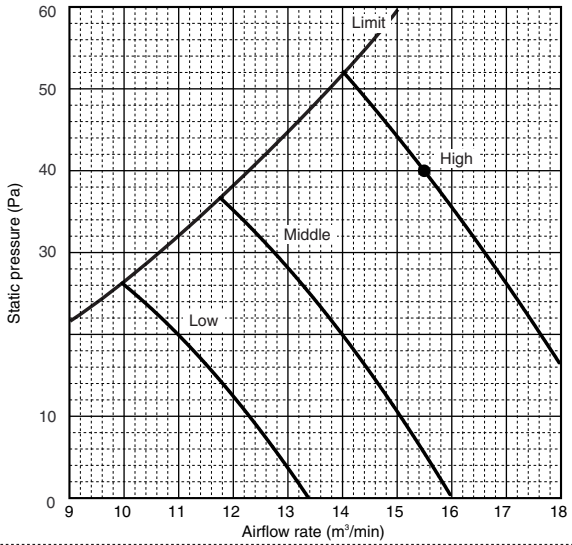

PFFY-P63VLRMM-E
External static pressure : 60Pa
Power source : 220,230,240V, 50/60Hz

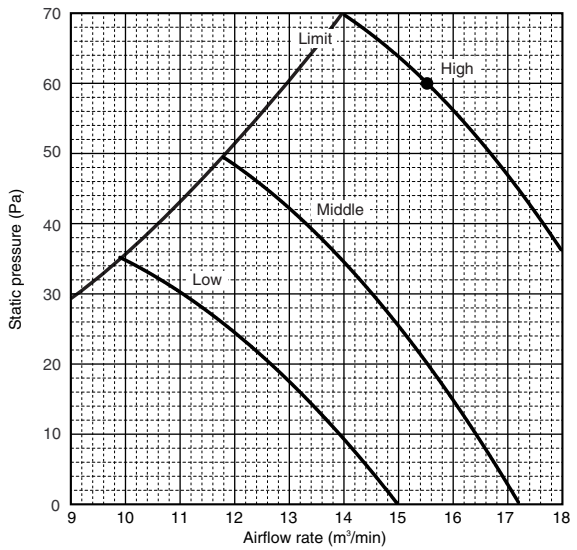

PFFY

6. TEMPERATURE/AIRFLOW DISTRIBUTIONS

6-1. Temperature distributions

PFFY-P20-63VLEM-E

<Cooling mode>

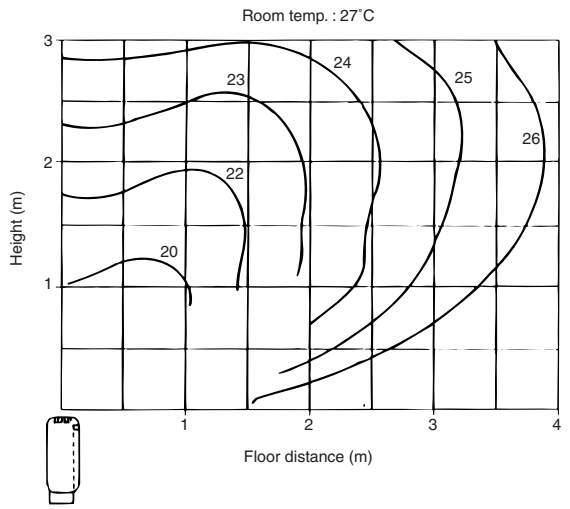

<Heating mode>

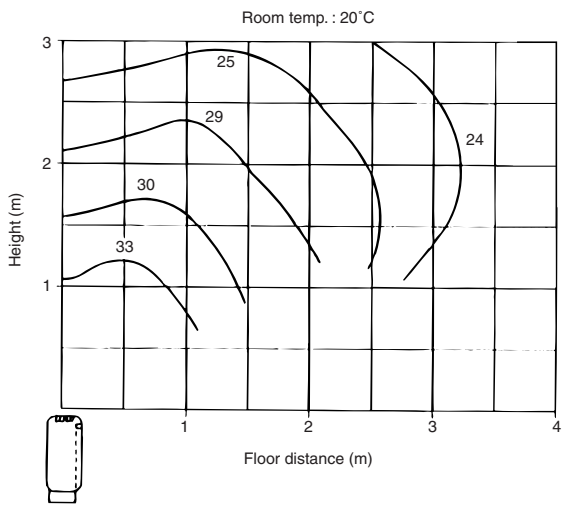

PFFY-P20-40VKM-E

<Cooling mode>

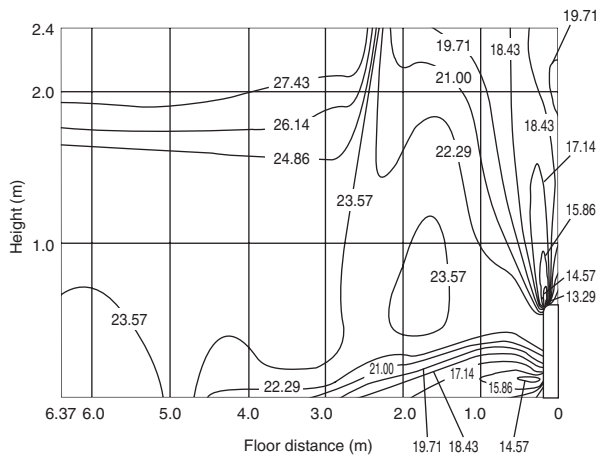

<Heating mode>

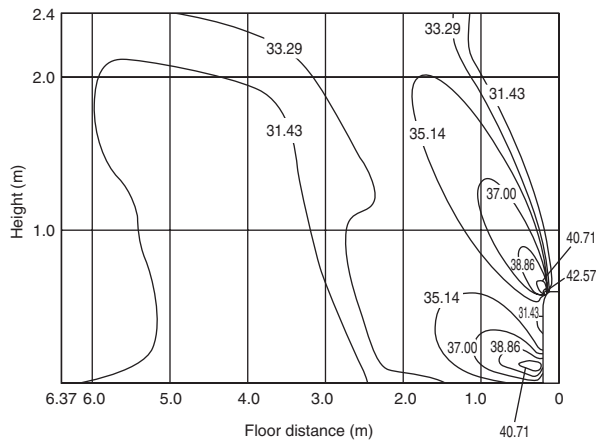

Note : These figures show typical temperature distributions in the conditions above. In the actual installation, they may differ from these figures under the influence of air temperature conditions, ceiling height, cooling/heating load,obstacles,etc.

PFFY

6-2. Airflow distributions

PFFY-P20-63VLEM-E

<Cooling mode>

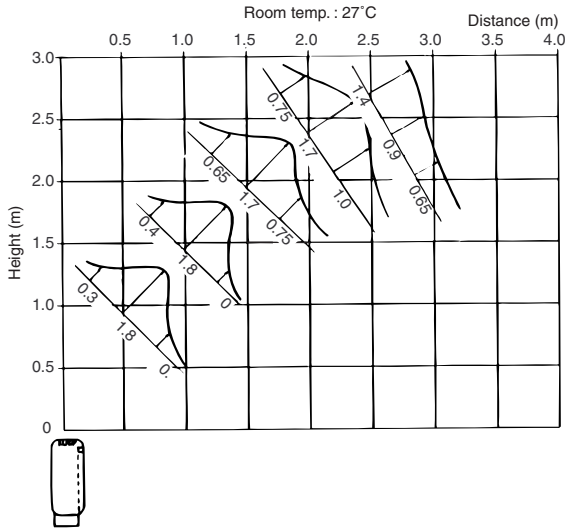

<Heating mode>

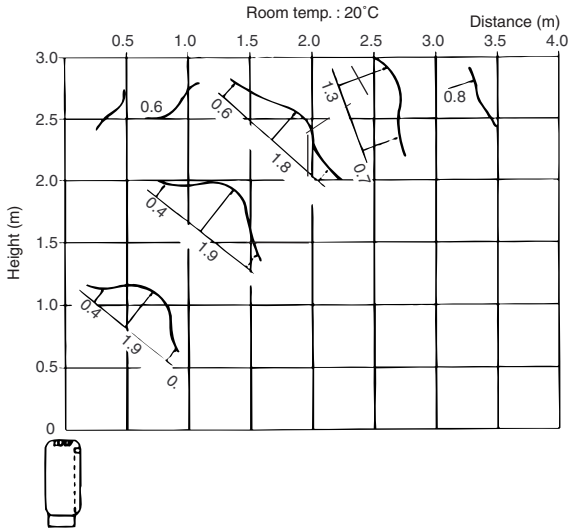

PFFY-P20-40VKM-E

<Cooling mode>

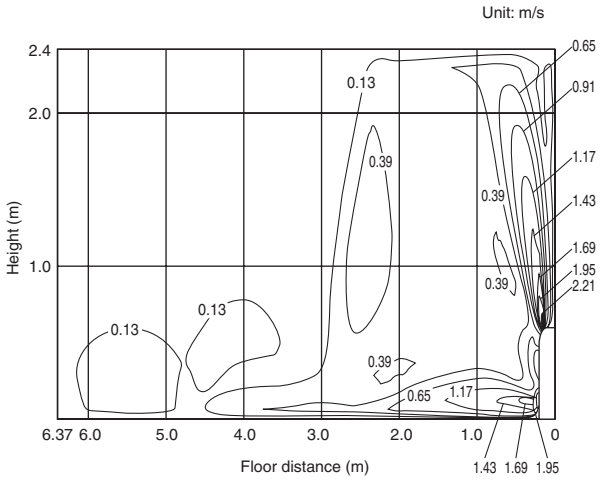

<Heating mode>

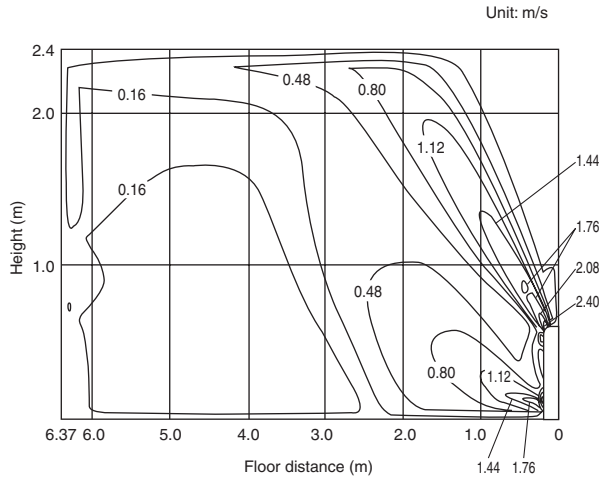

Note : These figures show typical airflow distributions in the conditions above. In the actual installation, they may differ from these figures under the influence of air temperature conditions, ceiling height, cooling/heating load,obstacles,etc.

PFFY

LGH-RX5-E

1. DIMENSIONS ..... 1 - 188
2. PERFORMANCES ..... 1 - 190
3. SPECIFICATIONS ..... 1 - 193
4. SAMPLE INSTALLATIONS ..... 1 - 196
5. WIRING DIAGRAMS ..... 1 - 197

LOSSNAY is a perfect combination of heat recovery and ventilation, which is a leading edge product in the ventilation and air-conditioning field.

The LOSSNAY core is a special preserved paper made cross-flow and plate-fin structure, which is referable below.

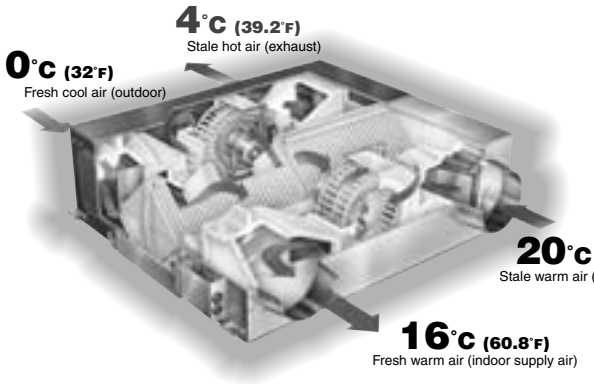

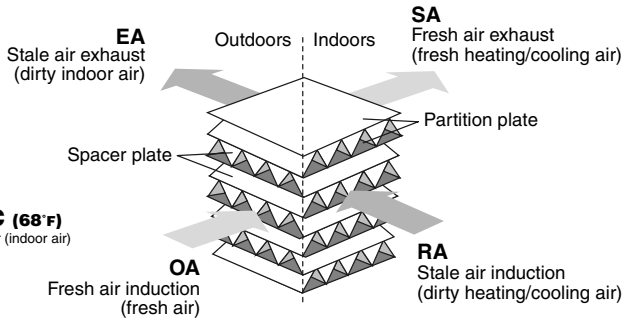

CITY MULTI can combine LOSSNAY into the air conditioning system, performing the best solution to ventilation and air-conditioning.

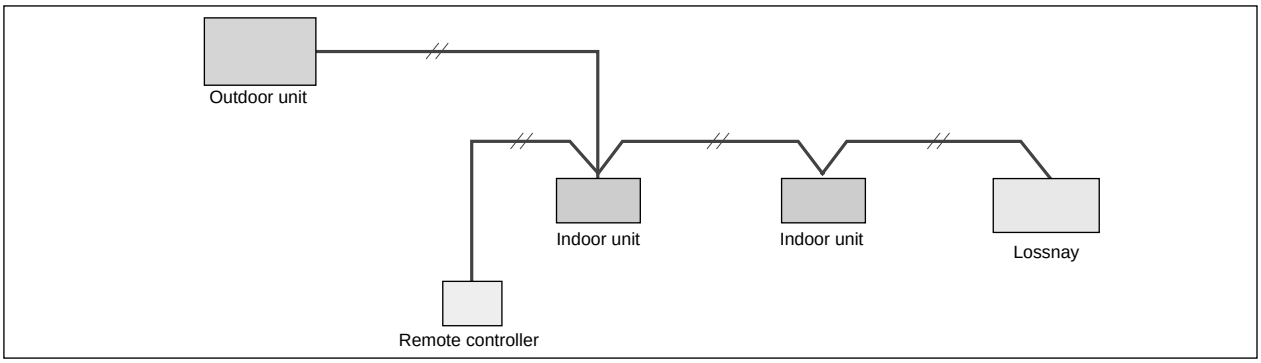

Line up of LOSSNAY units

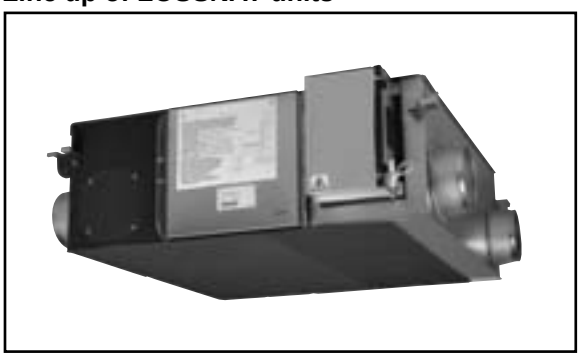

LGH-15RX5 [150m^3/h Single phase 220-240V 50Hz]
LGH-25RX5 [250m^3/h Single phase 220-240V 50Hz]
LGH-35RX5 [350m^3/h Single phase 220-240V 50Hz]
LGH-50RX5 [500m^3/h Single phase 220-240V 50Hz]
LGH-65RX5 [650m^3/h Single phase 220-240V 50Hz]
LGH-80RX5 [800m^3/h Single phase 220-240V 50Hz]
LGH-100RX5 [1000m^3/h Single phase 220-240V 50Hz]
LGH-150RX5 [1500m^3/h Single phase 220-240V 50Hz]
LGH-200RX5 [2000m^3/h Single phase 220-240V 50Hz]

(Unit : mm)

LGH-15RX5-E

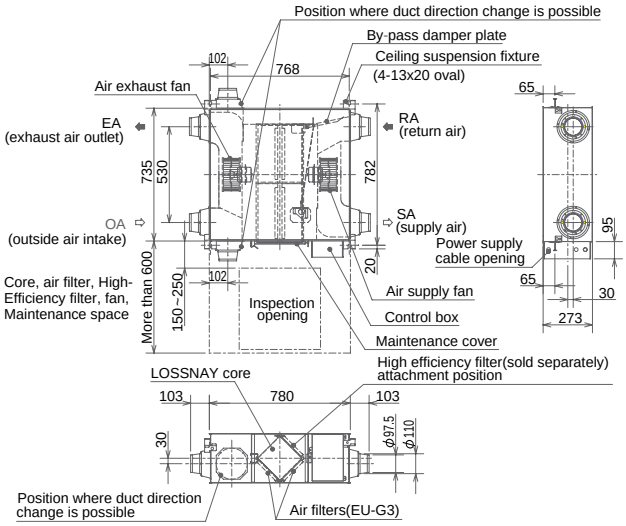

LGH-25RX5-E

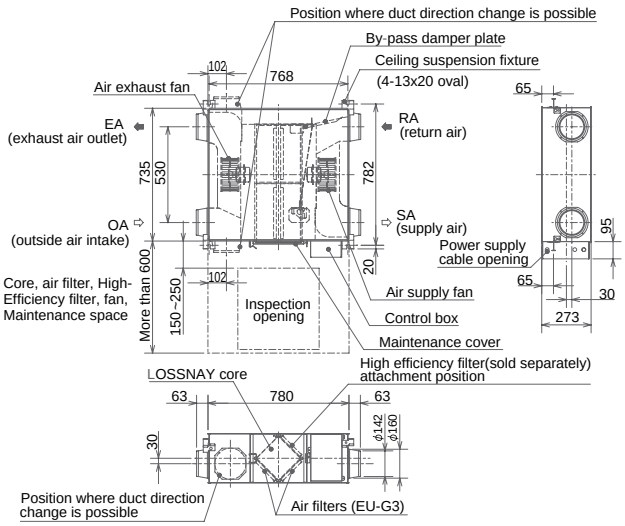

LGH-35RX5-E

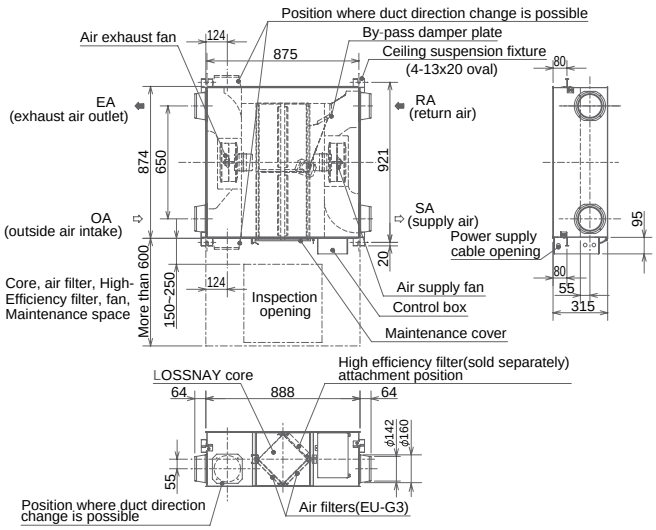

LGH-50RX5-E

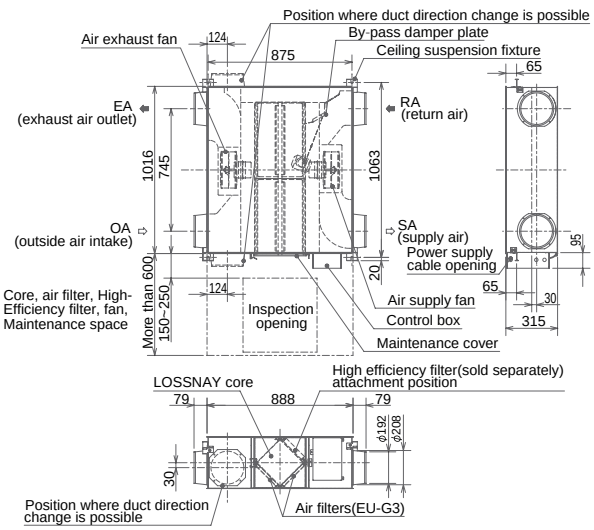

LGH-65RX5-E

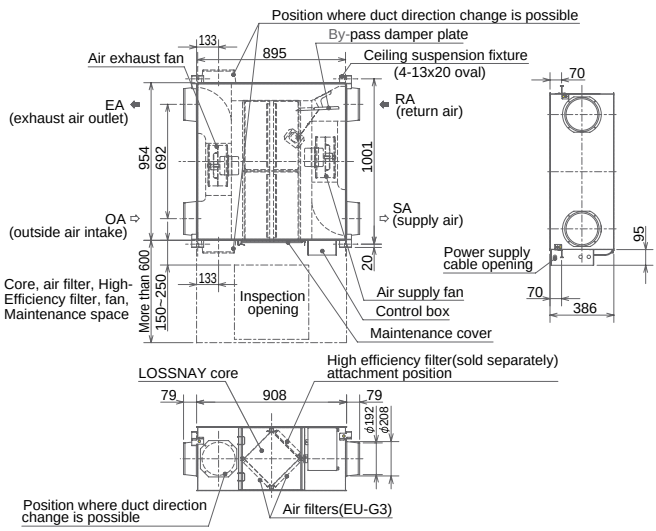

LGH-80RX5-E

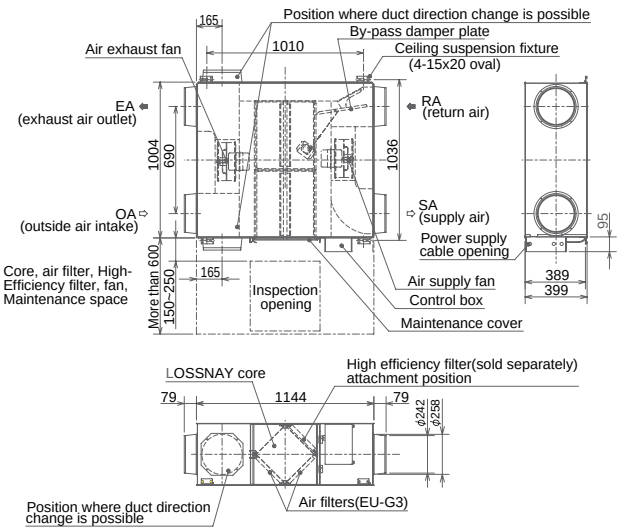

Lossnay

(Unit : mm)

LGH-100RX5-E

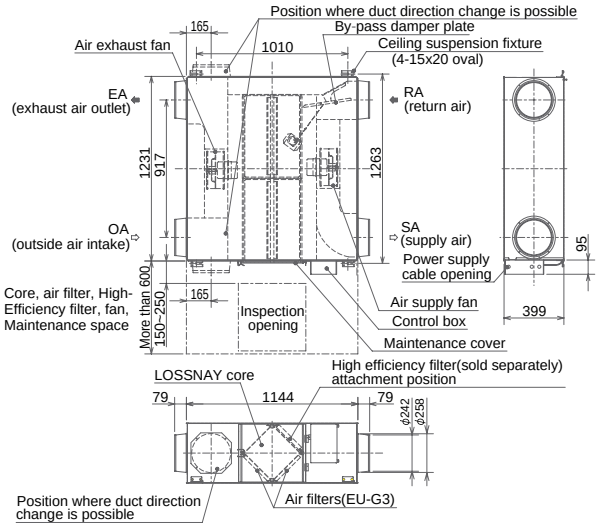

LGH-150RX5-E

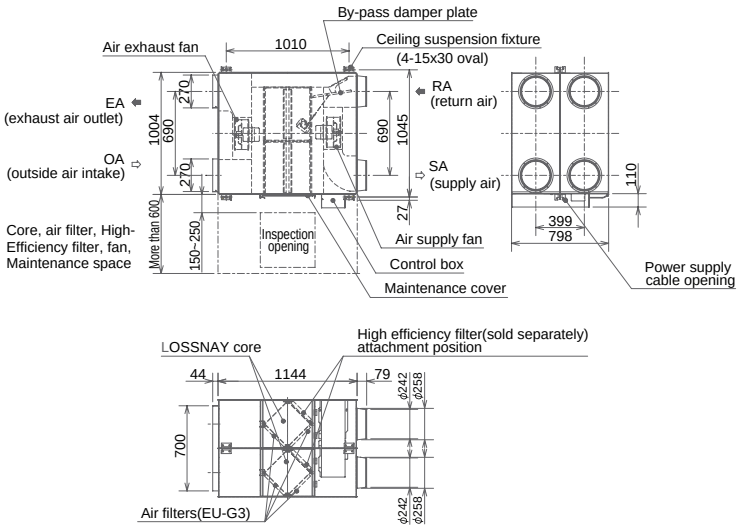

LGH-200RX5-E

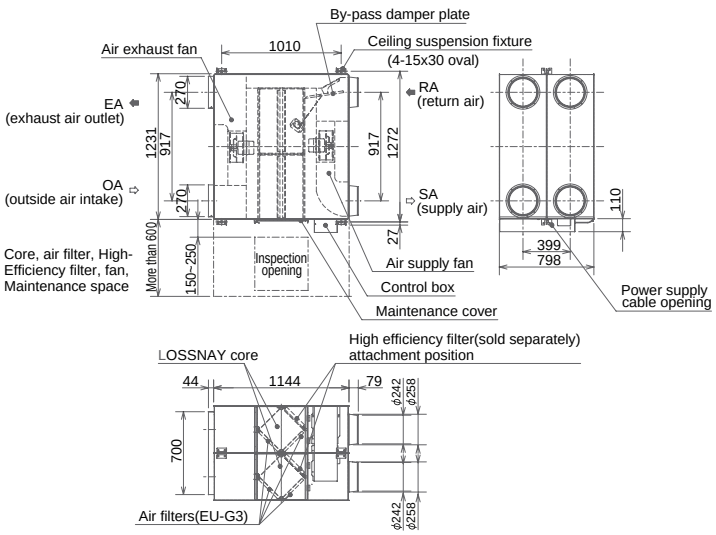

Lossnay

LGH-15RX5-E

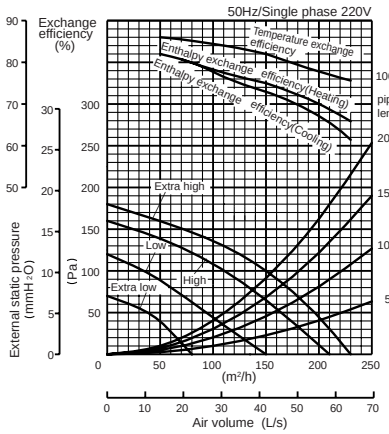

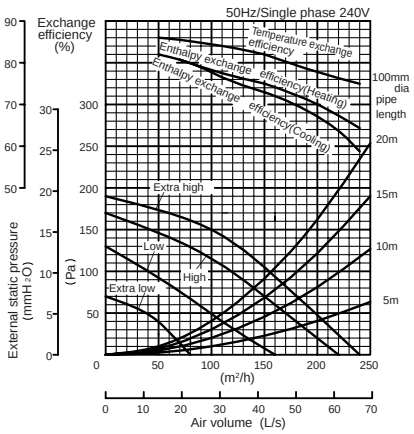

LGH-25RX5-E

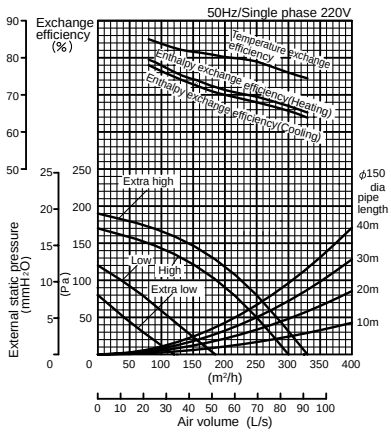

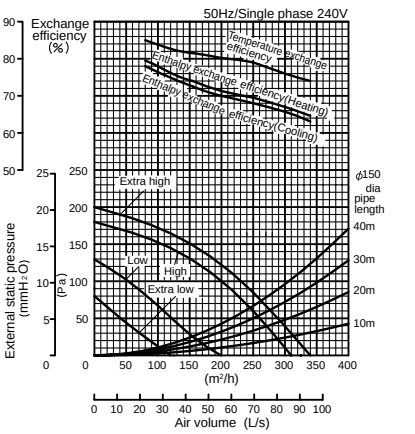

LGH-35RX5-E

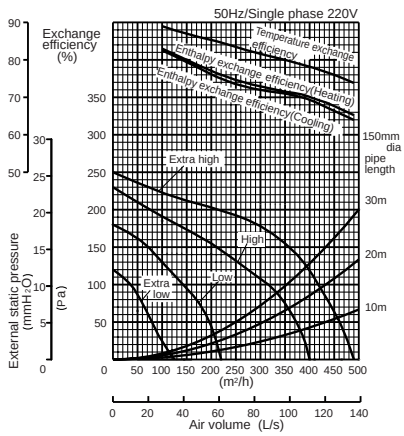

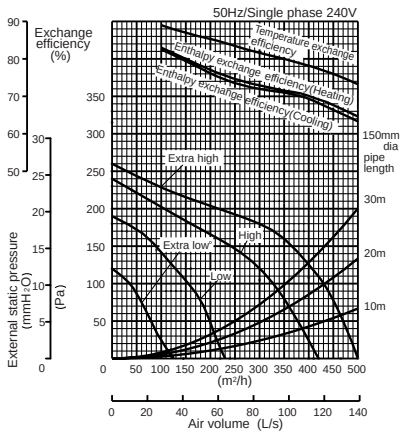

LGH-50RX5-E

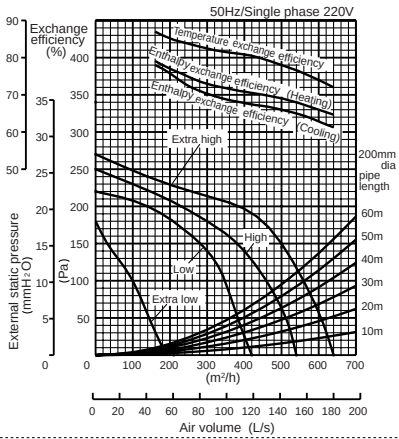

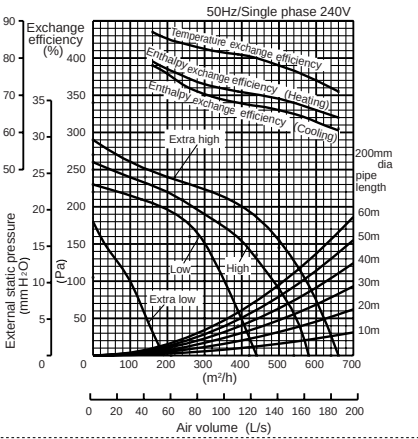

Lossnay

LGH-65RX5-E

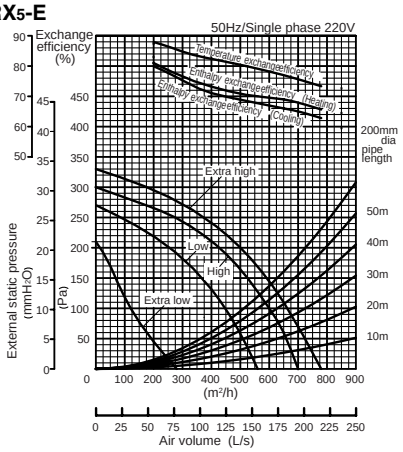

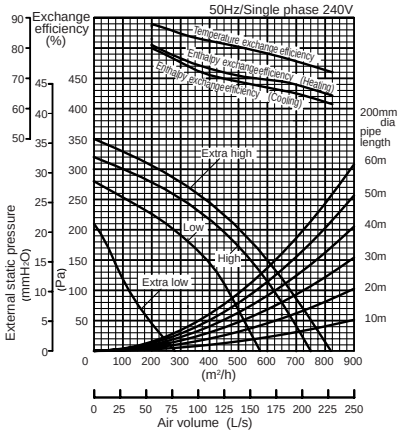

LGH-80RX5-E

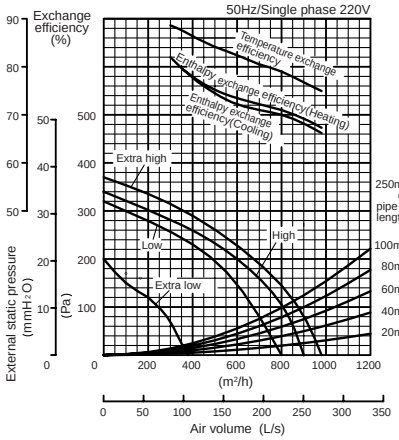

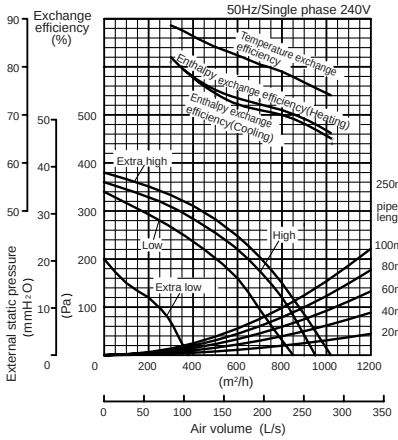

LGH-100RX5-E

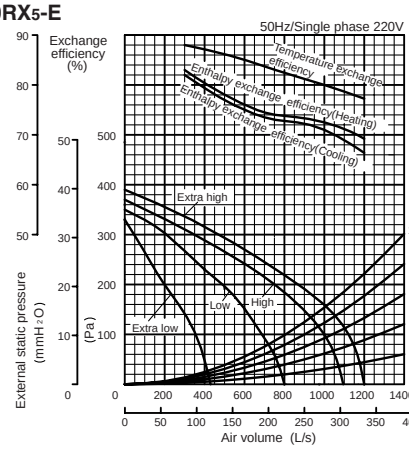

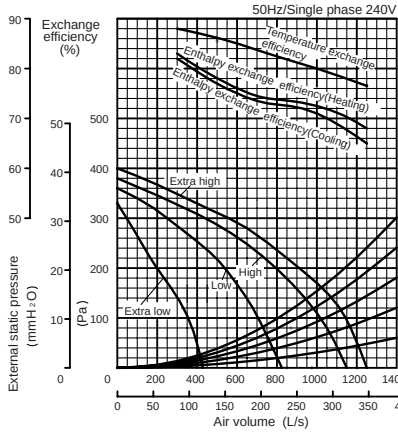

LGH-150RX5-E

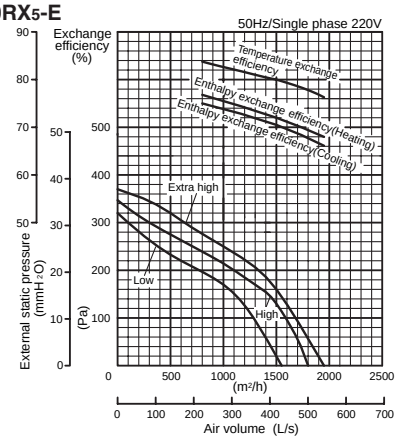

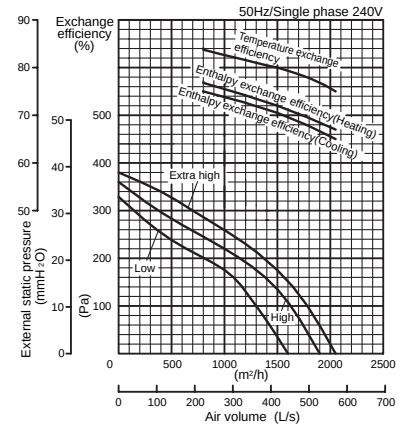

Lossnay

LGH-200RX5-E

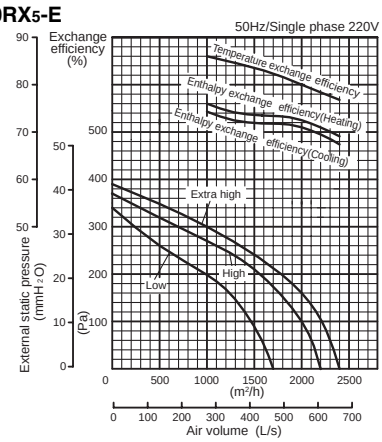

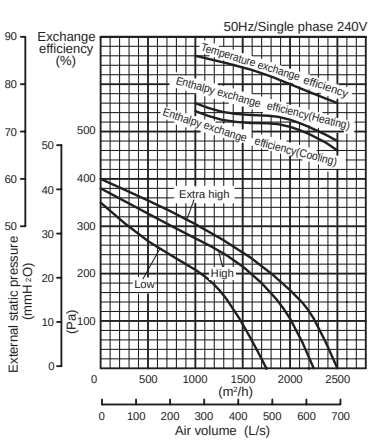

Lossnay

LGH-15RX5-E

Model		LGH-15RX5-E							
Frequency / Power source		50Hz / Single phase 220-240V							
Ventilation mode		LOSSNAY ventilation				By-pass ventilation			
Fan speed		Extra High	High	Low	Extra Low	Extra High	High	Low	Extra Low
Current (A)		0.44-0.46	0.37-0.38	0.25-0.25	0.14-0.15	0.45-0.46	0.37-0.38	0.25-0.26	0.14-0.15
Power consumption (W)		96-110	80-90	53-59	30-35	97-110	81-91	54-61	30-35
Air volume	(m³/h)	150	150	110	70	150	150	110	70
	(L/s)	42	42	31	19	42	42	31	19
External static pressure	(mmH2O)	10.2-10.7	6.6-7.1	3.6-4.1	1.4	10.2-10.7	6.6-7.1	3.6-4.1	1.4
	(Pa)	100-105	65-70	35-40	14	100-105	65-70	35-40	14
Temperature exchange efficiency (%)		82.0	82.0	84.0	85.5	—	—	—	—
Enthalpy exchange efficiency (%)	Heating	75.0	75.0	77.5	81.0	—	—	—	—
	Cooling	73.0	73.0	76.5	81.0	—	—	—	—
Noise (dB) (Measured at 1.5m under the center of panel in an anechoeic chamber)		27.5-28	26.5-27	22-23.5	18	28.5-29	27-28	23-24	18-19
Weight (kg)		20							
Starting current		Under 0.8 A Less							

*The Air outlets noise (45° angle, 1.5 meters in front of the unit) is about 6 dB greater than the indicated value. (at High Fan speed)

LGH-25RX5-E

Model		LGH-25RX5-E							
Frequency / Power source		50Hz / Single phase 220-240V							
Ventilation mode		LOSSNAY ventilation				By-pass ventilation			
Fan speed		Extra High	High	Low	Extra Low	Extra High	High	Low	Extra Low
Current (A)		0.52-0.55	0.47-0.48	0.26-0.27	0.17-0.18	0.53-0.55	0.47-0.48	0.26-0.27	0.17-0.18
Power consumption (W)		113-129	102-114	56-62	36-42	115-131	103-115	56-63	36-42
Air volume	(m³/h)	250	250	155	105	250	250	155	105
	(L/s)	69	69	43	29	69	69	43	29
External static pressure	(mmH2O)	8.2-8.7	5.1-6.1	2-2.5	0.9	8.2-8.7	5.1-6.1	2-2.5	0.9
	(Pa)	80-85	50-60	20-25	9	80-85	50-60	20-25	9
Temperature exchange efficiency (%)		79.0	79.0	81.5	83.5	—	—	—	—
Enthalpy exchange efficiency (%)	Heating	69.5	69.5	74.0	77.5	—	—	—	—
	Cooling	68.0	68.0	72.5	76.0	—	—	—	—
Noise (dB) (Measured at 1.5m under the center of panel in an anechoeic chamber)		26-27	25-26	20-21.5	18-19	26.5-27.5	25.5-26.5	20.5-22	18-19
Weight (kg)		20							
Starting current		Under 0.9 A Less							

*The Air outlets noise (45° angle,1.5 meters in front of the unit) is about 10 dB greater than the indicated value. (at High Fan speed)

LGH-35RX5-E

Model		LGH-35RX5-E							
Frequency / Power source		50Hz / Single phase 220-240V							
Ventilation mode		LOSSNAY ventilation				By-pass ventilation			
Fan speed		Extra High	High	Low	Extra Low	Extra High	High	Low	Extra Low
Current (A)		0.92-0.92	0.74-0.74	0.5-0.51	0.28-0.3	0.93-0.94	0.77-0.77	0.51-0.52	0.28-0.3
Power consumption (W)		195-212	160-169	105-116	58-69	197-217	164-173	105-116	58-69
Air volume	(m³/h)	350	350	210	115	350	350	210	115
	(L/s)	97	97	58	32	97	97	58	32
External static pressure	(mmH2O)	15.8-16.3	7.6-8.2	2.5-3.1	0.9	15.8-16.3	7.6-8.2	2.5-3.1	0.9
	(Pa)	155-160	75-80	25-30	9	155-160	75-80	25-30	9
Temperature exchange efficiency (%)		80.0	80.0	85.0	88.0	—	—	—	—
Enthalpy exchange efficiency (%)	Heating	71.5	71.5	76.5	81.5	—	—	—	—
	Cooling	71.0	71.0	75.5	81.0	—	—	—	—
Noise (dB) (Measured at 1.5m under the center of panel in an anechoeic chamber)		32-32	28.5-29.5	21.5-23	18	32.5-32.5	29.5-30.5	21.5-24	18
Weight (kg)		29							
Starting current		Under 2.4 A Less							

*The Air outlets noise (45° angle, 1.5 meters in front of the unit) is about 10 dB greater than the indicated value. (at High Fan speed)

LGH-50RX5-E

Model		LGH-50RX5-E							
Frequency / Power source		50Hz / Single phase 220-240V							
Ventilation mode		LOSSNAY ventilation				By-pass ventilation			
Fan speed		Extra High	High	Low	Extra Low	Extra High	High	Low	Extra Low
Current (A)		1.2-1.25	1.0-1.0	0.85-0.85	0.4-0.4	1.25-1.25	1.0-1.0	0.85-0.85	0.4-0.4
Power consumption (W)		255-286	207-228	175-190	80-95	260-290	210-230	180-195	80-95
Air volume	(m³/h)	500	500	390	180	500	500	390	180
	(L/s)	139	139	108	50	139	139	108	50
External static pressure	(mmH2O)	15.3-15.8	6.6-9.2	4.1-6.1	1.0	15.3-15.8	6.6-9.2	4.1-6.1	1.0
	(Pa)	150-155	65-90	40-60	10	150-155	65-90	40-60	10
Temperature exchange efficiency (%)		78.0	78.0	81.0	86.0	—	—	—	—
Enthalpy exchange efficiency (%)	Heating	69.0	69.0	71.0	78.0	—	—	—	—
	Cooling	66.5	66.5	68.0	77.0	—	—	—	—
Noise (dB) (Measured at 1.5m under the center of panel in an anechoeic chamber)		33-34	30.5-32	26.5-28	19	34-35	31-32.5	27-29	19
Weight (kg)		32							
Starting current		Under 3.0 A Less							

*The Air outlets noise (45° angle, 1.5 meters in front of the unit) is about 16 dB greater than the indicated value. (at High Fan speed)

LGH-65RX5-E

Model		LGH-65RX5-E							
Frequency / Power source		50Hz / Single phase 220-240V							
Ventilation mode		LOSSNAY ventilation				By-pass ventilation			
Fan speed		Extra High	High	Low	Extra Low	Extra High	High	Low	Extra Low
Current (A)		1.7-1.8	1.5-1.5	1.2-1.2	0.6-0.6	1.7-1.8	1.5-1.5	1.2-1.2	0.6-0.6
Power consumption (W)		350-380	308-322	248-265	120-140	350-385	310-335	250-265	120-140
Air volume	(m³/h)	650	650	520	265	650	650	520	265
	(L/s)	181	181	144	74	181	181	144	74
External static pressure	(mmH2O)	11.2-12.2	6.1-8.2	4.1-5.1	0.8	11.2-12.2	6.1-8.2	4.1-5.1	0.8
	(Pa)	110-120	60-80	40-50	8	110-120	60-80	40-50	8
Temperature exchange efficiency (%)		77.0	77.0	80.0	86.0	—	—	—	—
Enthalpy exchange efficiency (%)	Heating	68.5	68.5	70.5	78.0	—	—	—	—
	Cooling	66.0	66.0	68.5	77.0	—	—	—	—
Noise (dB) (Measured at 1.5m under the center of panel in an anechoeic chamber)		34-34.5	32-33	28.5-31.5	22	34.5-35	32.5-33.5	28.5-30.5	22-22.5
Weight (kg)		40							
Starting current		Under 4.4 A Less							

*The Air outlets noise (45° angle, 1.5 meters in front of the unit) is about 10 dB greater than the indicated value. (at High Fan speed)

LGH-80RX5-E

Model		LGH-80RX5-E							
Frequency / Power source		50Hz / Single phase 220-240V							
Ventilation mode		LOSSNAY ventilation				By-pass ventilation			
Fan speed		Extra High	High	Low	Extra Low	Extra High	High	Low	Extra Low
Current (A)		1.75-1.75	1.6-1.6	1.45-1.45	0.60-0.65	1.75-1.75	1.6-1.6	1.45-1.45	0.60-0.65
Power consumption (W)		380-415	345-370	315-340	125-145	380-415	345-370	315-340	120-145
Air volume	(m³/h)	800	800	700	355	800	800	700	355
	(L/s)	222	222	194	99	222	222	194	99
External static pressure	(mmH2O)	14.8-15.3	10.7-12.2	8.2-9.7	2	14.8-15.3	10.7-12.2	8.2-9.7	2
	(Pa)	145-150	105-120	80-95	20	145-150	105-120	80-95	20
Temperature exchange efficiency (%)		79.0	79.0	80.5	87.5	—	—	—	—
Enthalpy exchange efficiency (%)	Heating	71.0	71.0	72.5	79.5	—	—	—	—
	Cooling	70.0	70.0	71.5	79.5	—	—	—	—
Noise (dB) (Measured at 1.5m under the center of panel in an anechoeic chamber)		33.5-34.5	32-33	30-31	22	34.5-35.5	33-34	31-32	22
Weight (kg)		53							
Starting current		Under 3.8 A Less							

*The Air outlets noise (45° angle, 1.5 meters in front of the unit) is about 16 dB greater than the indicated value. (at High Fan speed)

LGH-100RX5-E

Model		LGH-100RX5-E							
Frequency / Power source		50Hz / Single phase 220-240V							
Ventilation mode		LOSSNAY ventilation				By-pass ventilation			
Fan speed		Extra High	High	Low	Extra Low	Extra High	High	Low	Extra Low
Current (A)		2.3-2.4	2.1-2.1	1.7-1.7	0.9-0.9	2.3-2.4	2.1-2.1	1.7-1.7	0.9-0.9
Power consumption (W)		500-535	445-475	350-380	175-200	510-550	460-485	365-395	175-200
Air volume	(m³/h)	1000	1000	755	415	1000	1000	755	415
	(L/s)	278	278	210	115	278	278	210	115
External static pressure	(mmH2O)	16.3-17.3	10.2-11.2	5.6-6.1	1.8	16.3-17.3	10.2-11.2	5.6-6.1	1.8
	(Pa)	160-170	100-110	55-60	18	160-170	100-110	55-60	18
Temperature exchange efficiency (%)		80.0	80.0	83.0	87.0	—	—	—	—
Enthalpy exchange efficiency (%)	Heating	72.5	72.5	74.0	80.0	—	—	—	—
	Cooling	71.0	71.0	73.0	79.0	—	—	—	—
Noise (dB) (Measured at 1.5m under the center of panel in an anechoeic chamber)		36-37	34-35	31-32.5	21-22	37-38	35-36	32-33	21-22
Weight (kg)		59							
Starting current		Under 4.6 A Less							

*The Air outlets noise (45° angle, 1.5 meters in front of the unit) is about 17 dB greater than the indicated value. (at High Fan speed)

LGH-150RX5-E

Model		LGH-150RX5-E					
Frequency / Power source		50Hz / Single phase 220-240V					
Ventilation mode		LOSSNAY ventilation			By-pass ventilation		
Fan speed		Extra High	High	Low	Extra High	High	Low
Current (A)		3.5-3.5	3.2-3.2	2.9-2.9	3.5-3.5	3.2-3.2	2.9-2.9
Power consumption (W)		760-830	690-740	630-680	765-835	695-745	635-685
Air volume	(m³/h)	1500	1500	1300	1500	1500	1300
	(L/s)	417	417	361	417	417	361
External static pressure	(mmH2O)	16.3-17.8	13.3-13.8	9.7-10.2	16.3-17.8	13.3-13.8	9.7-10.2
	(Pa)	160-175	130-135	95-100	160-175	130-135	95-100
Temperature exchange efficiency (%)		80.0	80.0	81.0	—	—	—
Enthalpy exchange efficiency (%)	Heating	72.0	72.0	72.5	—	—	—
	Cooling	70.5	70.5	71.5	—	—	—
Noise (dB) (Measured at 1.5m under the center of panel in an anechoeic chamber)		38-39	36-37.5	33.5-35	39-40.5	37.5-39	35.5-37
Weight (kg)		105					
Starting current		Under 7.3 A Less					

*The Air outlets noise (45° angle, 1.5 meters in front of the unit) is about 19 dB greater than the indicated value. (at High Fan speed)

LGH-200RX5-E

Model		LGH-200RX5-E					
Frequency / Power source		50Hz / Single phase 220-240V					
Ventilation mode		LOSSNAY ventilation			By-pass ventilation		
Fan speed		Extra High	High	Low	Extra High	High	Low
Current (A)		4.8-4.8	4.2-4.2	3.4-3.4	4.8-4.8	4.2-4.2	3.4-3.4
Power consumption (W)		1035-1100	910-980	715-785	1040-1110	915-980	720-785
Air volume	(m³/h)	2000	2000	1580	2000	2000	1580
	(L/s)	556	556	439	556	556	439
External static pressure	(mmH2O)	16.3-16.8	10.2-10.7	6.1-6.6	16.3-16.8	10.2-10.7	6.1-6.6
	(Pa)	160-165	100-105	60-65	160-165	100-105	60-65
Temperature exchange efficiency (%)		80.0	80.0	83.0	—	—	—
Enthalpy exchange efficiency (%)	Heating	72.5	72.5	73.5	—	—	—
	Cooling	71.0	71.0	72.0	—	—	—
Noise (dB) (Measured at 1.5m under the center of panel in an anechoeic chamber)		39.5-40	37-38	32.5-34	40.5-41	38-39	33.5-35
Weight (kg)		118					
Starting current		Under 11.9A Less					

*The Air outlets noise (45° angle, 1.5 meters in front of the unit) is about 20 dB greater than the indicated value. (at High Fan speed)

LGH-15RX5-E to 100RX5

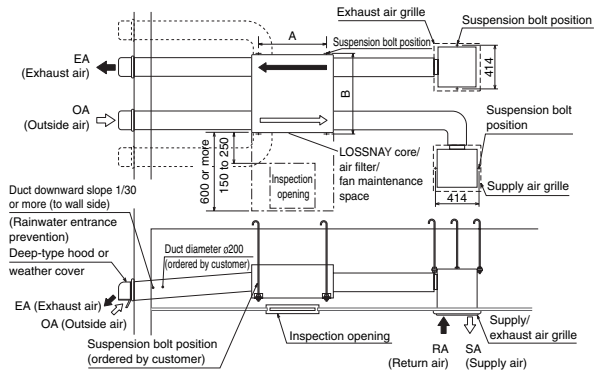

·Always leave inspection holes (□450 or □600) on the air filter and LOSSNAY core removal side.
· Always insulate the two ducts outside the room (intake air and exhaust air ducts) to prevent condensation.
·It is possible to change the direction of the outside air ducts (OA and EA side).
· Do not install the vent cap or round hood where it will come into direct contact with rain water.

Unit: mm

Model	A	B
LGH-15RX5	768	782
LGH-25RX5	768	782
LGH-35RX5	875	921
LGH-50RX5	875	1063
LGH-65RX5	895	1001
LGH-80RX5	1010	1036
LGH-100RX5	1010	1263

LGH-150RX5 and 200RX5

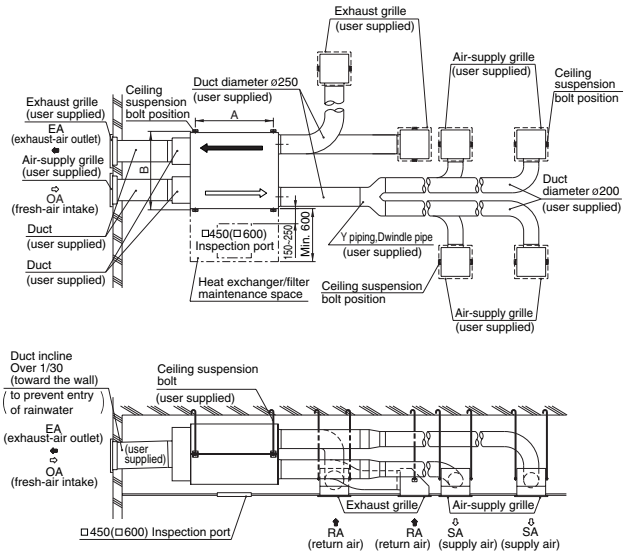

·Always leave inspection holes (□450 or □600) on the air filter and LOSSNAY core removal side.
· Always insulate the two ducts outside the room (intake air and exhaust air ducts) to prevent condensation.
·If necessary, order a weather cover to prevent rain water from direct contact or entering the unit.

Unit: mm

Model	A	B
LGH-150RX5	1010	1045
LGH-200RX5	1010	1272

Attention for specifications

1.Cold operation mode(*1) is to start repeating in the case that LOSSNAY's detected OA temperature is less than-10°C.
*1.Supply air(SA) in the operation for 60min. followed by stop operation for 10min.
2.The current, power consumption and efficiency are based on the air flow rate in the specification.
3.Fan speed is selectable by the remote controller from High (Extra-High), Low, Extra-Low(Extra-Low not equipped LGH-150RX5 and 200RX5).
Multi Ventilation Mode should set on LOSSNAY unit or remote controller (PZ-60DR-E).
4.LOSSNAY ventilation mode is to start automatically in the case that LOSSNAY's detected OA temperature is less than +8°C,even if By-pass ventilation is set by remote controller.
Remote controller continue to show "By-pass ventilation" in this case.
5.Temperature Exchange efficiency(%) are based on winter condition.
6.Mitsubishi Electric measures the machine according to the Japan Industrial Standards(JIS B 8628)

Attention

1.When using the product where it is exposed to high temperatures and humidity (40°C or higher, RH 80% or higher), or where fog occurs frequently, moisture is likely to condense in the core, and may result in condensation build up in the unit.The product should not be used under such conditions.
2.Outdoor air may enter the LOSSNAY owing to the pressure difference between indoor and outdoor or external winds even when the product is not operated. It is recommended to install an Electrically operated damper to block the outdoor air.
3.In a cold weather area, an area with strong external winds or where fog occurs frequently, cold outdoor air, external winds or fog may be introduced into the product when its operation is stopped.
It is recommended to install an Electrically operated damper.
4.In a cold weather area, or others, dewing or freezing could occur on the main unit, where the duct is connected, or other sections, depending on the conditions of outdoor air and indoor temperature and moisture, even if they are within the range of operating conditions. Make sure to confirm the operating conditions and other precautions, and do not use the product if dewing or freezing is anticipated.
5.The outside ducts must be tilted at a gradient (1/30 or more) down toward the outdoor louvres from LOSSNAY, and properly insulated. (The entry of rain water may cause power leakage, fire, or damege to household property)
6.The two outdoor ducts must be covered with heat-insulating material in order to prevent condensation from forming.
If it is expected that the ambient temperature around the place where the LOSSNAY unit is installed will be high during the summer air conditioning season, it is recommended that the indoor ductwork be covered with insulation material.
7.Inspection opening (450 × 450 or 600 × 600mm)must be installed on the filter and LOSSNAY

LGH-15RX5 to 100RX5

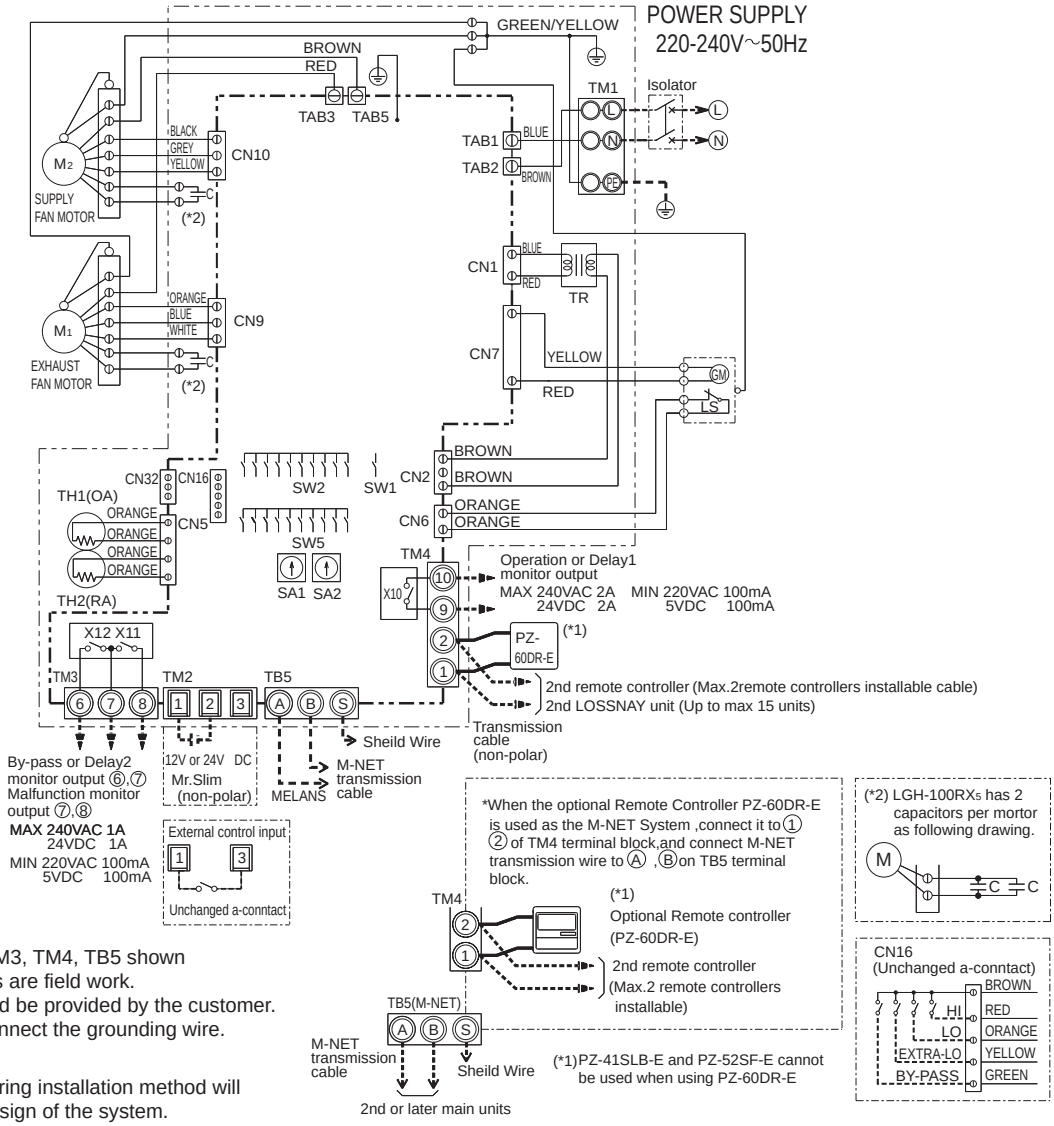

■NOTE 1.TM1, TM2, TM3, TM4, TB5 shown in dotted lines are field work.
2.Isolator should be provided by the customer.
3.Be sure to connect the grounding wire.

*Attention

With this product, the wiring installation method will vary according to the design of the system.
Perform electrical installation to meet local electrical regulations.
·Always use double insulated PVC cable for the transmission cables.
·Wiring work must be performed by qualified professionals.
·All supply circuits must be disconnected before obtaining access to the terminal devices.

*Specifications may be subject to change without notice.

Definition of Symbols

M1:	Motor for exhaust fan	CN1:	Connector (Transformer primary)
M2:	Motor for supply fan	CN2:	Connector (Transformer secondary)
C:	Capacitor	CN5:	Connector (Thermistor)
GM:	Motor for By-pass operation	CN6:	Connector (Microswitch)
LS:	Microswitch	CN7:	Connector (Motor for By-pass operation)
TH1:	Thermistor for outside air	TAB3:	Tab connector(Fan motor)
TH2:	Thermistor for return air	TAB5:	Tab connector (Fan motor)
SW1:	Switch (Main/Sub change)	CN9:	Connector (Fan motor)
SW2, 5:	Switch (Function selection)	CN10:	Connector (Fan motor)
TM1:	Terminal block (Power supply)	CN16:	Connector (High/Low/By-pass switch)
TM2:	Terminal block (External control input)	CN32:	Connector (Remote control selection)
TM3:	Terminal block (Monitor output)	SA1:	Address setting rotary switch (10 digit)
TM4 :	Terminal block (Transmission cable and monitor output)	SA2:	Address setting rotary switch (1 digit)
TB5 :	Terminal block (M-NET Transmission cable)	SYMBOL	○ □ : Indicates terminal block. : Connector. : Board insertion connector or fastening connector of control board.
TAB1,TAB2:	Connector(Power supply)		
TR1:	Control circuit transformer		
X10,X11,X12:	Relay contact		

Lossnay

LGH-150RX5 and 200RX5

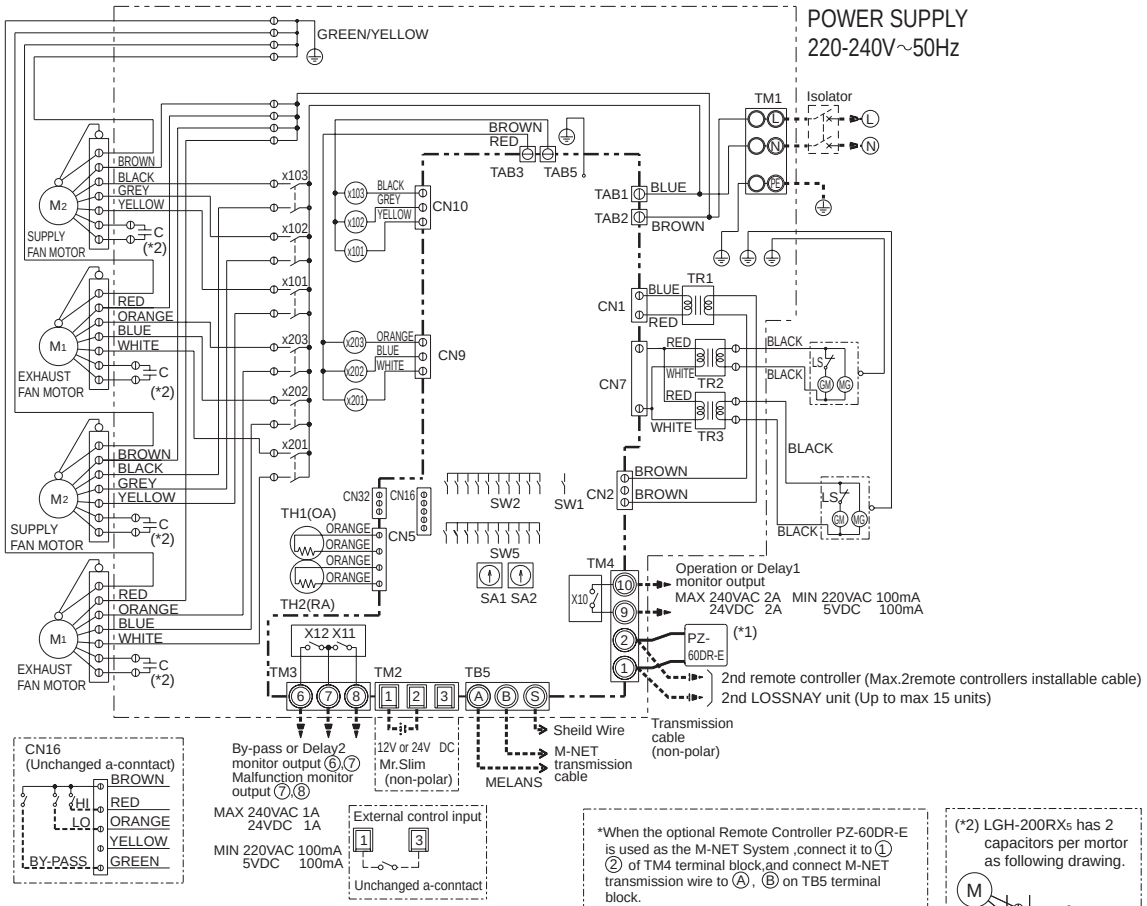

■ NOTE 1.TM1, TM2, TM3, TM4, TB5 shown in dotted lines are field work.
2.Isolator should be provided by the customer.
3.Be sure to connect the grounding wire.

*Attention

With this product, the wiring installation method will vary according to the design of the system.
Perform electrical installation to meet local electrical regulations.
·Always use double insulated PVC cable for the transmission cables.
·Wiring work must be performed by qualified professionals.
·All supply circuits must be disconnected before obtaining access to the terminal devices.

*Specifications may be subject to change without notice.

Definition of Symbols

M1:	Motor for exhaust fan	X10,X11,X12:	Relay contact
M2:	Motor for supply fan	X101,X102,X103:	Relay Supply fan speed control
C:	Capacitor	X201,X202,X203:	Relay Exhaust fan speed control
GM:	Motor for By-pass operation	CN1:	Connector (Transformer primary)
LS:	Microswitch	CN2:	Connector (Transformer secondary)
TH1:	Thermistor for outside air	CN5:	Connector (Thermistor)
TH2:	Thermistor for return air	CN6:	Connector(Microswitch)
SW1:	Switch (Main/Sub change)	CN7:	Connector (Motor for By-pass operation)
SW2, 5:	Switch (Function selection)	CN9:	Connector (Fan motor)
TM1:	Terminal block (Power supply)	TAB3:	Tab connector (Fan motor)
TM2:	Terminal block(External control input)	TAB5:	Tab connector (Fan motor)
TM3:	Terminal block (Monitor output)	CN9:	Connector (Fan motor)
TM4:	Terminal block (Transmission cable and monitor output)	CN10:	Connector (Fan motor)
		CN16:	Connector(High/Low/By-pass switch)
TB5:	Terminal block (M-NET Transmission cable)	CN32:	Connector (Remote control selection)
TAB1,TAB2:	Connector(Power supply)	SA1:	Address setting rotary switch (10 digit)
TR1:	Control circuit transformer	SA2:	Address setting rotary switch (1 digit)
TR2,TR3:	By-pass operation transformer	SYMBOL	◯ □ : Indicates terminal block. ① Board insertion connector or fastening ⊡ connector of control board.

Lossnay

CITY MULTI

OA Processing unit

GUF-RD3
GUF-RDH3

GUF-RD(H)3

1. SPECIFICATIONS 1 - 200
2. SOUND LEVELS
   2-1. NC curves 1 - 201
   2-2. Fan characteristics curves 1 - 202
3. EXTERNAL DIMENSIONS 1 - 203
4. WIRING DIAGRAMS 1 - 204

OA Processing unit GUF-RD(H)3 combines the characteristics of LOSSNAY and air conditioning function of indoor unit, offers perfect air conditioning in which fresh outdoor air, humidity, temperature adjustment are all considered.
Moreover, GUF-RD(H)3 realizes the air conditioning solution at the most energy saving method.

GUF Structure:

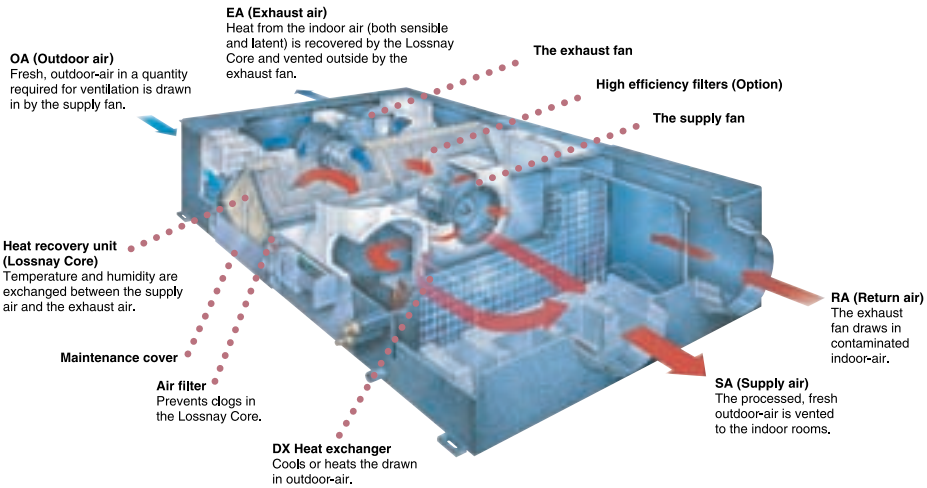

Permeable Film Humidifier (GUF-RDH Model)

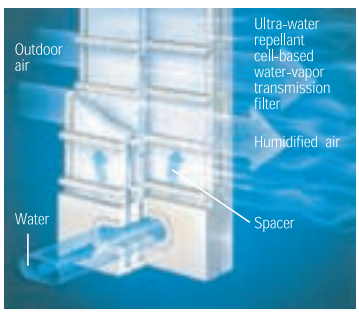

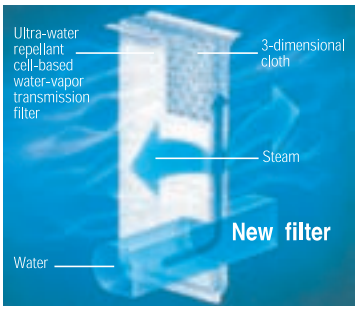

Line up of OA Processing units

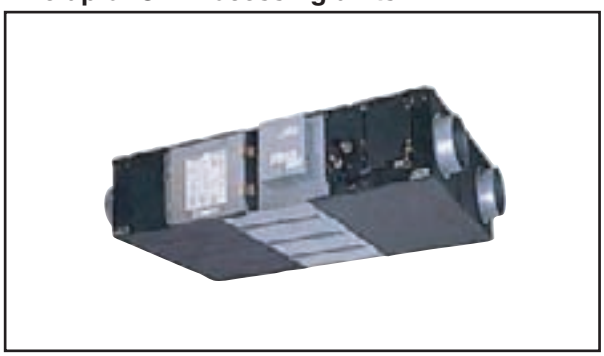

GUF-50RD3-E	500m3/h	1-phase 220-240V 50Hz, 1-phase 220V 60Hz
GUF-100RD3-E	1000m3/h	1-phase 220-240V 50Hz, 1-phase 220V 60Hz
GUF-50RDH3-E	500m3/h	1-phase 220-240V 50Hz, 1-phase 220V 60Hz
GUF-100RDH3-E	1000m3/h	1-phase 220-240V 50Hz, 1-phase 220V 60Hz

1. SPECIFICATIONS

Model			GUF-50RDH3	GUF-100RDH3	GUF-50RD3	GUF-100RD3
Power source			1-phase 220-240V 50Hz, 1-phase 220V 60Hz			
Cooling capacity	✻1	kW	5.46 <1.83>	11.17 <3.85>	5.46 <1.83>	11.17 <3.85>
Figure in < > is the recovery	✻1	kcal / h	4,700 <1,600>	9,600 <3,300>	4,700 <1,600>	9,600 <3,300>
capacity by LOSSNAY core.	✻1	Btu / h	18,600 <6,200>	38,100 <13,100>	18,600 <6,200>	38,100 <13,100>
	✻2	kcal / h	4,500 <1,400>	9,300 <3,000>	4,500 <1,400>	9,300 <3,000>
✻4	Power input	W	235-265	480-505	235-265	480-505
✻4	Current input	A	1.15	2.20	1.15	2.20
Heating capacity	✻3	kW	6.18 <2.01>	12.50 <4.20>	6.18 <2.01>	12.50 <4.20>
Figure in < > is the recovery	✻3	kcal / h	5,300 <1,700>	10,800 <3,600>	5,300 <1,700>	10,800 <3,600>
capacity by LOSSNAY core.	✻3	Btu / h	21,100 <6,900>	42,700 <14,300>	21,100 <6,900>	42,700 <14,300>
✻4	Power input	W	235-265	480-505	235-265	480-505
✻4	Current input	A	1.15	2.20	1.15	2.20
Capacity equivalent to indoor unit			P32	P63	P32	P63
Humidifying capacity		kg / h	2.7	5.4	-	-
		lb / h	6.0	12.0	-	-
	Humidifier		**Permeable film humidifier**		**-**	
External finish			**Galvanized, with grey insulation sheet**			
External dimension H x W x D		mm	317 x 1,016 x 1,288	398 x 1,231 x 1,580	317 x 1,016 x 1,288	398 x 1,231 x 1,580
		in.	12-1/2 x 40 x 50-3/4	15-11/16 x 48-1/2 x 62-1/4	12-1/2 x 40 x 50-3/4	15-11/16 x 48-1/2 x 62-1/4
Net weight		kg (lb)	57 (126)	98 (217)	54 (120)	92 (203)
Heat exchanger	LOSSNAY core		Partition, Cross-flow structure, Special preserved paper-plate.			
	Refrigerant coil		Cross fin (Aluminium fin and copper tube)			
FAN	Type x Quantity		SA: Centrifugal fan (Sirocco fan) x 1			
			EA: Centrifugal fan (Sirocco fan) x 1			
	External static press. ✻5	Pa	125	135	140	140
		mmH_2O	12.7	13.8	14.3	14.3
	Motor type		Totally enclosed capacitor permanent split-phase induction motor, 4 poles, 2units			
	Motor output	kW	-	-	-	-
	Driving mechanism		Direct-driven by motor			
	Airflow rate (High value)	m^3 / h	500	1,000	500	1,000
		L / s	139	278	139	278
		cfm	294	589	294	589
Sound pressure level (Low-High) (measured in anechoic room) ✻4		dB <A>	33.5-34.5	38-39	33.5-34.5	38-39
Insulation material			Polyester sheet			
Air filter	Supplying air		Non-woven fabrics filter (Gravitational method 82%) & Optional part: High efficiency filter (Colorimetric method 65%)			
	Exhausting air		Non-woven fabrics filter (Gravitational method 82%)			
Protection device			Fuse			
Refrigerant control device			LEV			
Connectable outdoor unit			R410A CITY MULTI			
Diameter of refrigerant pipe	Liquid	mm (in.)	ø6.35 (ø1/4) Flare	ø9.52 (ø3/8) Flare	ø6.35 (ø1/4) Flare	ø9.52 (ø3/8) Flare
	Gas	mm (in.)	ø12.7 (ø1/2) Flare	ø15.88 (ø5/8) Flare	ø12.7 (ø1/2) Flare	ø15.88 (ø5/8) Flare
Field drain pipe size		mm (in.)	Socket(I.D. 32mm (1-1/4))+O.D. 32mm (1-1/4)			
Drawing	External		GUF-ext-rdH3		GUF-ext-rd3	
	Wiring		GUF-wir-rdH3		GUF-wir-rd3	
	Refrigerant cycle		-		-	
Standard attachment	Document		Installation Manual, Instruction Book			
	Accessory					
Remark	Optional parts		High efficiency filter: PZ-50RFM (for GUF-50RDH3, GUF-50RD3) PZ-100RFM (for GUF-100RDH3, GUF-100RD3)			
	Installation		Details on foundation work, duct work, insulation work, electrical wiring, power source switch, and other items shall be referred to the Installation Manual.			

Note :

	✻1 Nominal cooling conditions	✻2 Nominal cooling conditions	✻3 Nominal heating conditions
Indoor :	27˚CDB/19˚CWB (81˚FDB/66˚FWB)	27˚CDB/19.5˚CWB (81˚FDB/67˚FWB)	20˚CDB (68˚FDB)
Outdoor :	35˚CDB (95˚FDB)	35˚CDB (95˚FDB)	7˚CDB/6˚CWB (45˚FDB/43˚FWB)
Pipe length :	7.5 m (24-9/16 ft)	5 m (16-3/8 ft)	7.5 m (24-9/16 ft)
Level difference :	0 m (0 ft)	0 m (0 ft)	0 m (0 ft)

* Nominal conditions ✻1, ✻3 are subject to JIS B8615-1.
* Due to continuing improvement, above specification may be subject to change without notice.

✻4 The values are measured at the rated external static pressure.
✻5 The figure in < > indicates the value when external static pressure is changed.

Unit converter

kcal/h	= kW x 860
Btu/h	= kW x 3,412
cfm	= m^3/min x 35.31
lb	= kg / 0.4536

*Above specification data is subject to rounding variation.

Ref.: Spec_PMFY-P20VBM-E

OA processing unit

2. SOUND LEVELS

2-1. NC curves

GUF-50RDH3/50RD3
Directly below
(Measurement point A)

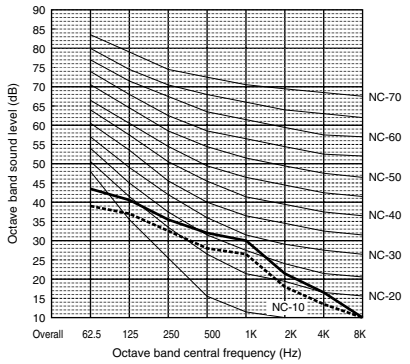

GUF-50RDH3/50RD3
Outlet
(Measurement point B)

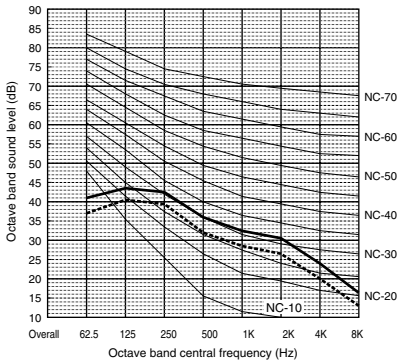

GUF-100RDH3/100RD3
Directly below
(Measurement point A)

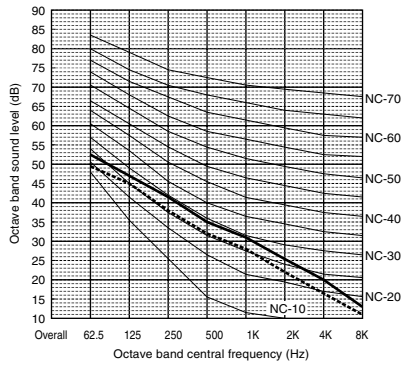

GUF-100RDH3/100RD3
Outlet
(Measurement point B)

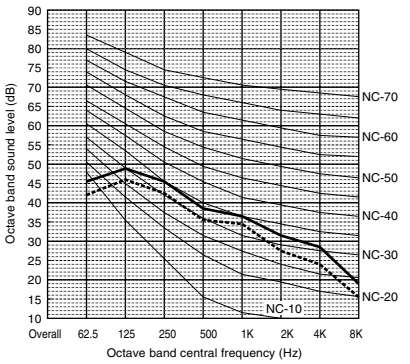

● Measurement Condition

Measurement site:

Mitsubishi Electric Co.,
Nakatsugawa Works
Anechoic chamber

<Ceiling recessed type>

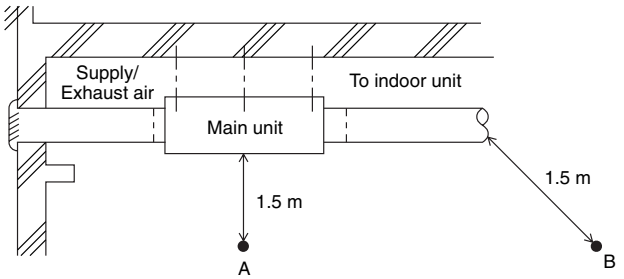

OA processing unit

2. SOUND LEVELS

2-2. Fan characteristics curves

GUF-50RDH3
Humidifying Type

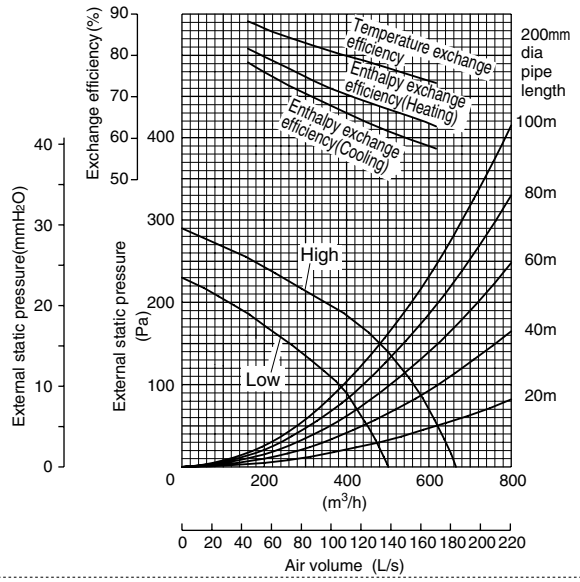

GUF-100RDH3
Humidifying Type

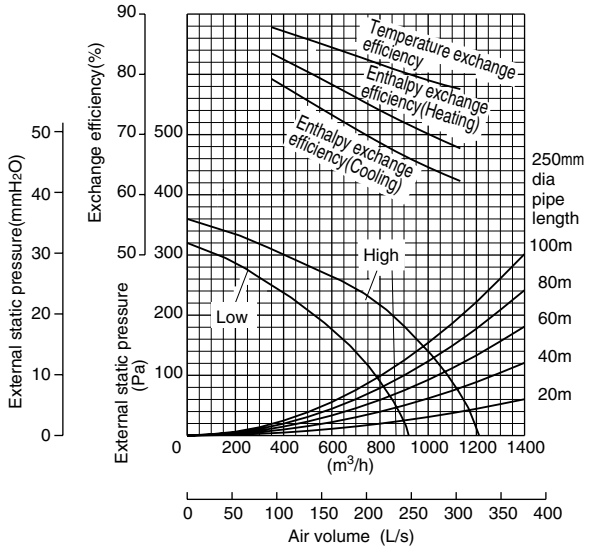

GUF-50RD3
Non-Humidifying Type

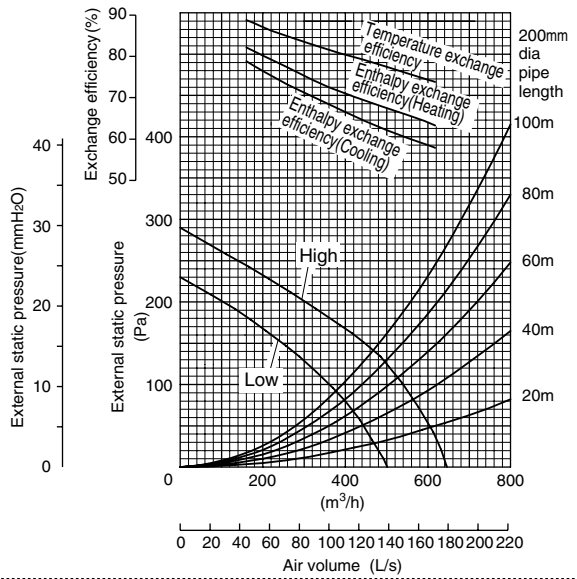

GUF-100RD3
Non-Humidifying Type

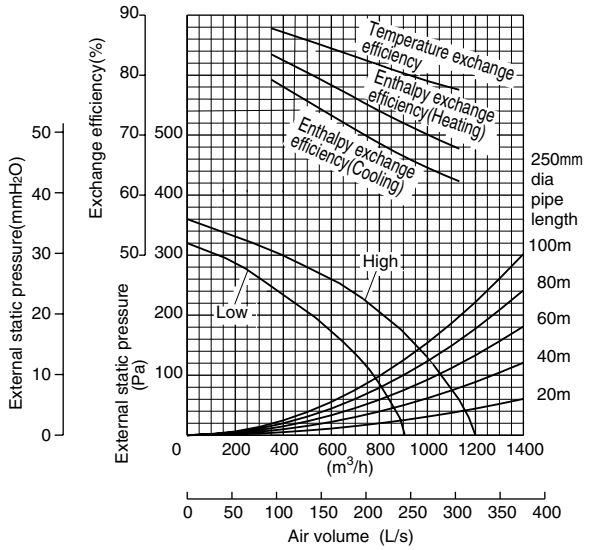

OA processing unit

GUF-50,100RD(H)3

Drw. : GUF-ext-rdH3
Unit : mm

Humidifying Type GUF-50/100RDH3

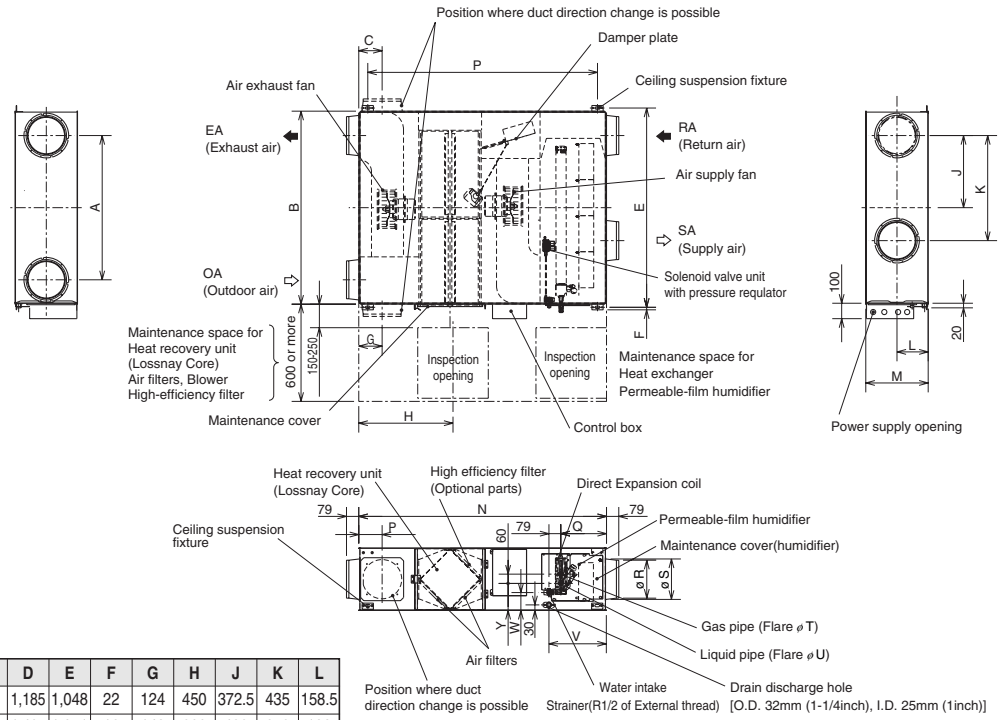

Model	A	B	C	D	E	F	G	H	J	K	L
GUF-50RDH3	745	1,016	124	1,185	1,048	22	124	450	372.5	435	158.5
GUF-100RDH3	920	1,231	149	1,465	1,271	16	149	600	460	670	199
Model	**M**	**N**	**P**	**Q**	**R**	**S**	**T**	**U**	**V**	**W**	**Y**
GUF-50RDH3	317	1,288	124	266	192	208	12.7	6.35	347	99	135
GUF-100RDH3	398	1,580	149	280	242	258	15.88	9.52	361	110	169

Non-Humidifying Type GUF-50/100RD3

Drw. : GUF-ext-rd3
Unit : mm

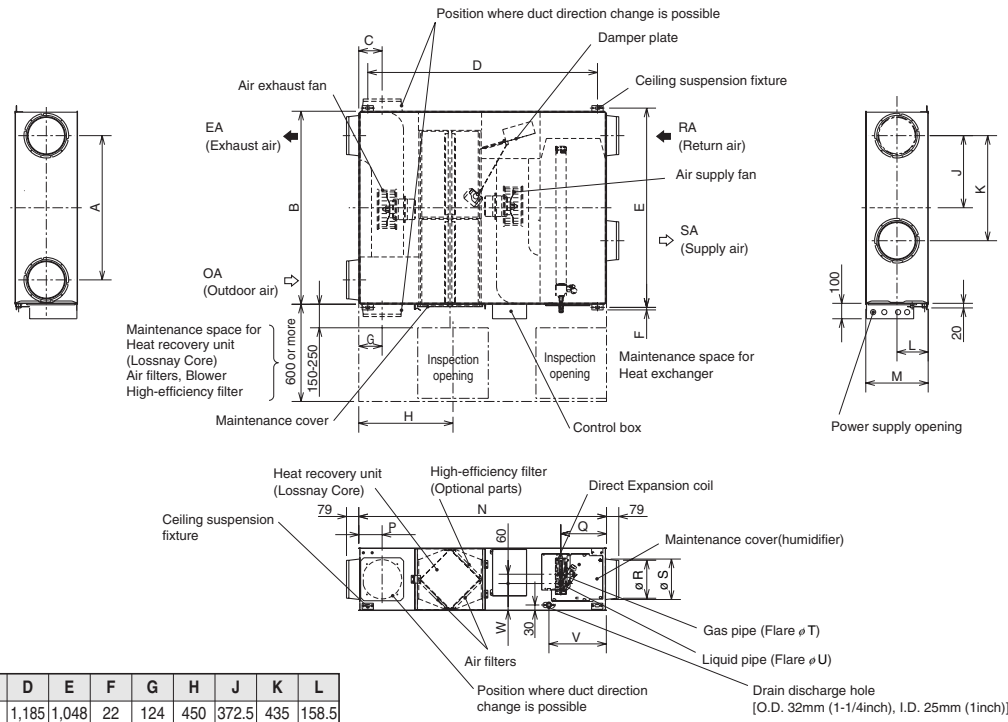

Model	A	B	C	D	E	F	G	H	J	K	L
GUF-50RD3	745	1,016	124	1,185	1,048	22	124	450	372.5	435	158.5
GUF-100RD3	920	1,231	149	1,465	1,271	16	149	600	460	670	199
Model	**M**	**N**	**P**	**Q**	**R**	**S**	**T**	**U**	**V**	**W**	
GUF-50RD3	317	1,288	124	266	192	208	12.7	6.35	347	135	
GUF-100RD3	398	1,580	149	280	242	258	15.88	9.52	361	169	

OA processing unit

Humidifying Type GUF-50/100RDH3

Drw. :GUF-wir-rdH3

- TM1, TM2 shown in dotted lines are field work.
- Be sure to connect the grounding wire.
- Breakers and controller switches should be provided by the customer.

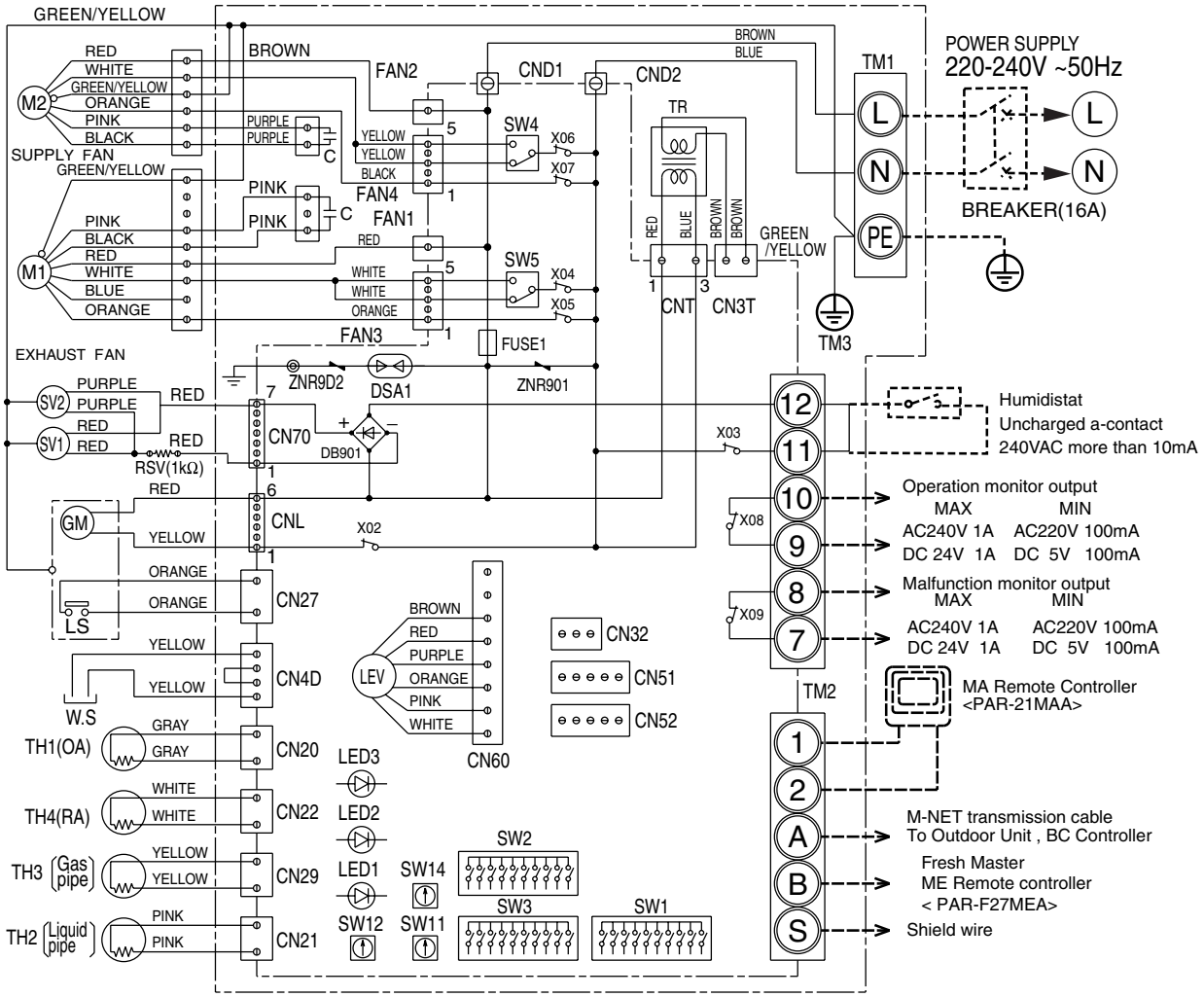

MARK ◯ : indicates terminal block, ⦶ : connector
⦶ : board insertion connector or fastening connector of control board.

Symbol Explanation

Symbol	Name	Symbol	Name	Symbol	Name
M1	Fan motor (exhaust)	TM1	Terminal block (power supply)	1, 2	Remote control terminal
M2	Fan motor (supply)	TM2	Terminal block (transmission)	A, B	M-NET transmission terminal
C	Capacitor	TM3	Terminal block (humidistat, monitor)	S	Shield
W.S	Water sensor	SW1	Switch (function selection)	CND1, CND2	Connector (power supply)
SV1	Solenoid valve (pressure regulator)	SW2	Switch (capacity code setting)	X02-X09	Relay
SV2	Solenoid valve (exhaust)	SW3	Switch (function selection)	TR	Transformer
TH1	Thermistor (outdoor air temp. detection)	SW4,SW5	Switch	GM	Damper motor
TH2	Thermistor (pipe temp. detection/liquid)	SW11	Switch (1st digit address set)	LS	Limit switch
TH3	Thermistor (pipe temp. detection/gas)	SW12	Switch (2nd digit address set)	LED1	Power supply monitor
TH4	Thermistor (room air temp. detection)	SW14	Switch (branch NO. set)	LED2	MA Remote controller
LEV	Electronic linear expansion valve	CN32	Connecter (Remote input)		Power supply monitor
RSV	Resistance (solenoid valve)	CN51,CN52	Connecter (Remote input/output)	LED3	M-NET Power supply monitor

Non-Humidifying Type GUF-50/100RD3

Drw. :GUF-wir-rd3

- TM1, TM2 shown in dotted lines are field work.
- Be sure to connect the grounding wire.
- Breakers and controller switches should be provided by the customer.

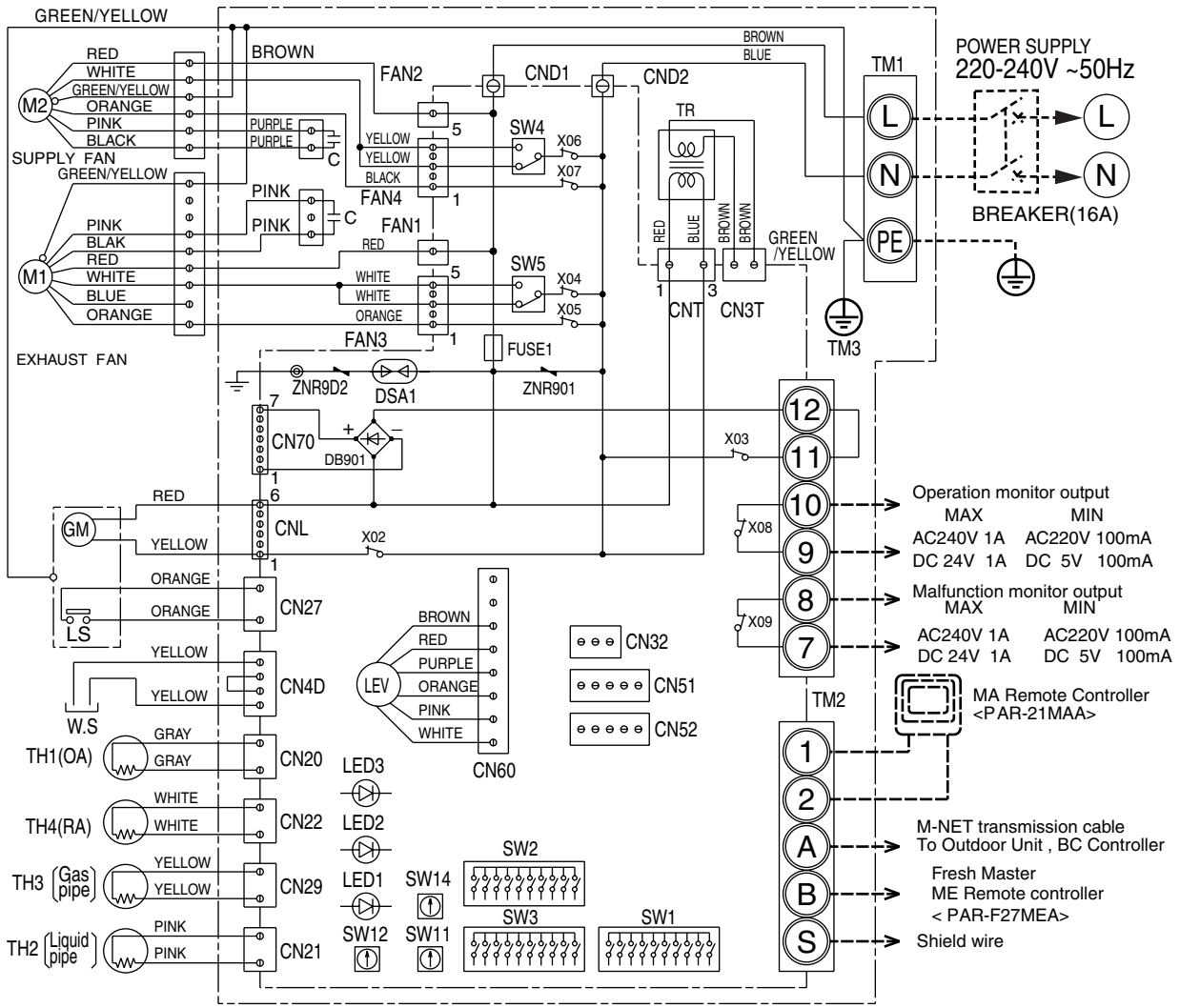

MARK ◯ : indicates terminal block, ⦶ : connector

⦶ : board insertion connector or fastening connector of control board.

Symbol Explanation

Symbol	Name	Symbol	Name	Symbol	Name
M1	Fan motor (exhaust)	TM1	Terminal block (power supply)	1, 2	Remote control terminal
M2	Fan motor (supply)	TM2	Terminal block (transmission)	A, B	M-NET transmission terminal
C	Capacitor	TM3	Terminal block (humidistat, monitor)	S	Shield
W.S	Water sensor	SW1	Switch (function selection)	CND1, CND2	Connector (power supply)
TH1	Thermistor (outdoor air temp. detection)	SW2	Switch (capacity code setting)	X02-X09	Relay
TH2	Thermistor (pipe temp. detection/liquid)	SW3	Switch (function selection)	TR	Transformer
TH3	Thermistor (pipe temp. detection/gas)	SW4,SW5	Switch	GM	Damper motor
TH4	Thermistor (room air temp. detection)	SW11	Switch (1st digit address set)	LS	Limit switch
LEV	Electronic linear expansion valve	SW12	Switch (2nd digit address set)	LED1	Power supply monitor
		SW14	Switch (branch NO. set)	LED2	MA Remote controller
		CN32	Connecter (Remote input)		Power supply monitor
		CN51,CN52	Connecter (Remote input/output)	LED3	M-NET Power supply monitor

OA processing unit

CMB-P-V-G1, V-GA1, V-HA1, V-GB1, V-HB1

1. SPECIFICATIONS ..... 1 - 208
2. EXTERNAL DIMENSIONS ..... 1 - 217
3. ELECTRICAL WIRING DIAGRAMS ..... 1 - 222

1. SPECIFICATIONS

Model name			CMB-P104V-G1		CMB-P105V-G1	
Number of branch			4		5	
Power source			1-phase 220/230/240V			
			50Hz	60Hz	50Hz	60Hz
Power input (220/230/240)	Cooling	kW	0.067/0.076/0.085	0.054/0.061/0.067	0.082/0.093/0.104	0.066/0.074/0.082
	Heating	kW	0.030/0.034/0.038	0.024/0.027/0.030	0.038/0.043/0.048	0.030/0.034/0.038
Current (220/230/240)	Cooling	A	0.31/0.34/0.36	0.25/0.27/0.28	0.38/0.41/0.44	0.30/0.33/0.35
	Heating	A	0.14/0.15/0.16	0.11/0.12/0.13	0.18/0.19/0.20	0.14/0.15/0.16
External finish			Galvanized steel plate (Lower part drain pan painting N1.5)			
Connectable outdoor unit			PURY-(E)P200/250/300/350YHM-A(-BS) PQRY-P200/250/300YHM-A			
Indoor unit capacity connectable to 1 branch			Model P80 or smaller (Use optional joint pipe combing 2 branches when the total unit capacity exceeds 81.)			
External dimension H x W x D		mm (in.)	284 x 648 x 432 (11-3/16 x 25-17/32 x 17-1/32)			
Refrigerant piping diameter	Connectable outdoor unit capacity		**To outdoor unit**			
			High press. pipe		**Low press. pipe**	
		to P200 mm (in.) O.D.	15.88 (5/8) Brazed		19.05 (3/4) Brazed	
		P250/P300 mm (in.) O.D.	19.05 (3/4) Brazed		22.2 (7/8) Brazed	
		to P350 mm (in.) O.D.	19.05 (3/4) Brazed		28.58 (1-1/8) Brazed	
			To indoor unit			
			Liquid pipe		**Gas pipe**	
		mm (in.) O.D.	Indoor unit Model 50 or smaller 6.35 (1/4) Brazed bigger than 50 9.52 (3/8) Brazed (12.7 (1/2) with optional joint pipe used.)		Indoor unit Model 50 or smaller 12.7 (1/2) Brazed bigger than 50 15.88 (5/8) Brazed (19.05 (3/4) with optional joint pipe used.)	
Field drain pipe size		mm (in.) O.D.	32 (1-1/4)			
Net weight		kg (lbs)	24 (53)		27 (60)	
Accessories			Drain Connection pipe (with flexible hose and insulation) Reducer		Drain Connection pipe (with flexible hose and insulation) Reducer	
Remark						

Note:
1. Installation/foundation work, electrical connection work, insulation work, power source switch, and other items shall be referred to the Installation Manual.
2. The equipment is for R410A refrigerant.
3. Install this product in a location where noise (refrigerant noise) emitted by the unit will not disturb the neighbors.
   (For use in quiet environments with low background noise, position the BC CONTROLLER at least 5m away from any indoor units.)
4. Indoor units P100, P125, P140 can be connected to 1 branch. (In this case, cooling capacity decrease a little.)
5. Refrigerant piping diameter for connection of plural indoor units with 1 branch shall be referred to the Installation Manual.

Ref.: Spec_CMB-P104-105V-G1

BC

1. SPECIFICATIONS

Model name			CMB-P106V-G1		CMB-P108V-G1	
Number of branch			6		8	
Power source			1-phase 220/230/240V			
			50Hz	60Hz	50Hz	60Hz
Power input (220/230/240)	Cooling	kW	0.097/0.110/0.123	0.078/0.088/0.097	0.127/0.144/0.161	0.102/0.115/0.127
	Heating	kW	0.045/0.051/0.057	0.036/0.041/0.045	0.060/0.068/0.076	0.048/0.054/0.060
Current (220/230/240)	Cooling	A	0.45/0.48/0.52	0.36/0.39/0.41	0.58/0.63/0.68	0.47/0.50/0.53
	Heating	A	0.21/0.23/0.24	0.17/0.18/0.19	0.28/0.30/0.32	0.22/0.24/0.25
External finish			Galvanized steel plate (Lower part drain pan painting N1.5)			
Connectable outdoor unit			PURY-(E)P200/250/300/350YHM-A(-BS) PQRY-P200/250/300YHM-A			
Indoor unit capacity connectable to 1 branch			Model P80 or smaller (Use optional joint pipe combing 2 branches when the total unit capacity exceeds 81.)			
External dimension H x W x D		mm (in.)	284 x 648 x 432 (11-3/16 x 25-17/32 x 17-1/32)			
Refrigerant piping diameter	Connectable outdoor unit capacity		**To outdoor unit**			
			High press. pipe		**Low press. pipe**	
		to P200 mm (in.) O.D.	15.88 (5/8) Brazed		19.05 (3/4) Brazed	
		P250/P300 mm (in.) O.D.	19.05 (3/4) Brazed		22.2 (7/8) Brazed	
		to P350 mm (in.) O.D.	19.05 (3/4) Brazed		28.58 (1-1/8) Brazed	
			To indoor unit			
			Liquid pipe		**Gas pipe**	
		mm (in.) O.D.	Indoor unit Model 50 or smaller 6.35 (1/4) Brazed bigger than 50 9.52 (3/8) Brazed (12.7 (1/2) with optional joint pipe used.)		Indoor unit Model 50 or smaller 12.7 (1/2) Brazed bigger than 50 15.88 (5/8) Brazed (19.05 (3/4) with optional joint pipe used.)	
Field drain pipe size		mm (in.) O.D.	32 (1-1/4)			
Net weight		kg (lbs)	28 (62)		33 (73)	
Accessories			Drain Connection pipe (with flexible hose and insulation) Reducer		Drain Connection pipe (with flexible hose and insulation) Reducer	
Remark						

Note:
1. Installation/foundation work, electrical connection work, insulation work, power source switch, and other items shall be referred to the Installation Manual.
2. The equipment is for R410A refrigerant.
3. Install this product in a location where noise (refrigerant noise) emitted by the unit will not disturb the neighbors.
(For use in quiet environments with low background noise, position the BC CONTROLLER at least 5m away from any indoor units.)
4. Indoor units P100, P125, P140 can be connected to 1 branch. (In this case, cooling capacity decrease a little.)
5. Refrigerant piping diameter for connection of plural indoor units with 1 branch shall be referred to the Installation Manual.

Ref.: Spec_CMB-P106-108V-G1

BC

1. SPECIFICATIONS

Model name			CMB-P1010V-G1		CMB-P1013V-G1	
Number of branch			10		13	
Power source			1-phase 220/230/240V			
			50Hz	60Hz	50Hz	60Hz
Power input (220/230/240)	Cooling	kW	0.156/0.177/0.198	0.126/0.141/0.156	0.201/0.228/0.255	0.162/0.182/0.201
	Heating		0.075/0.085/0.095	0.060/0.068/0.075	0.097/0.110/0.123	0.078/0.088/0.097
Current (220/230/240)	Cooling	A	0.71/0.77/0.83	0.58/0.62/0.65	0.92/1.00/1.07	0.74/0.80/0.84
	Heating		0.35/0.37/0.40	0.28/0.30/0.32	0.45/0.48/0.52	0.36/0.39/0.41
External finish			Galvanized steel plate (Lower part drain pan painting N1.5)			
Connectable outdoor unit			PURY-(E)P200/250/300/350YHM-A(-BS) PQRY-P200/250/300YHM-A			
Indoor unit capacity connectable to 1 branch			Model P80 or smaller (Use optional joint pipe combing 2 branches when the total unit capacity exceeds 81.)			
External dimension H x W x D		mm (in.)	284 x 648 x 432 (11-3/16 x 25-17/32 x 17-1/32)		284 x 1,098 x 432 (11-3/16 x 43-1/4 x 17-1/32)	
Refrigerant piping diameter	Connectable outdoor unit capacity		**To outdoor unit**			
			High press. pipe		**Low press. pipe**	
		to P200 mm (in.) O.D.	15.88 (5/8) Brazed		19.05 (3/4) Brazed	
		P250/P300 mm (in.) O.D.	19.05 (3/4) Brazed		22.2 (7/8) Brazed	
		to P350 mm (in.) O.D.	19.05 (3/4) Brazed		28.58 (1-1/8) Brazed	
			To indoor unit			
			Liquid pipe		**Gas pipe**	
		mm (in.) O.D.	Indoor unit Model 50 or smaller 6.35 (1/4) Brazed bigger than 50 9.52 (3/8) Brazed (12.7 (1/2) with optional joint pipe used.)		Indoor unit Model 50 or smaller 12.7 (1/2) Brazed bigger than 50 15.88 (5/8) Brazed (19.05 (3/4) with optional joint pipe used.)	
Field drain pipe size		mm (in.) O.D.	32 (1-1/4)			
Net weight		kg (lbs)	38 (84)		45 (100)	
Accessories			Drain Connection pipe (with flexible hose and insulation) Reducer		Drain Connection pipe (with flexible hose and insulation) Reducer	
Remark						

Note:
1. Installation/foundation work, electrical connection work, insulation work, power source switch, and other items shall be referred to the Installation Manual.
2. The equipment is for R410A refrigerant.
3. Install this product in a location where noise (refrigerant noise) emitted by the unit will not disturb the neighbors.
   (For use in quiet environments with low background noise, position the BC CONTROLLER at least 5m away from any indoor units.)
4. Indoor units P100, P125, P140 can be connected to 1 branch. (In this case, cooling capacity decrease a little.)
5. Refrigerant piping diameter for connection of plural indoor units with 1 branch shall be referred to the Installation Manual.

Ref.: Spec_CMB-P1010-1013V-G1

BC

Model name			**CMB-P1016V-G1**	
Number of branch			16	
Power source			1-phase 220/230/240V	
			50Hz	60Hz
Power input (220/230/240)	Cooling	kW	0.246/0.279/0.312	0.198/0.222/0.246
	Heating		0.119/0.135/0.151	0.096/0.108/0.119
Current (220/230/240)	Cooling	A	1.12/1.22/1.30	0.90/0.97/1.03
	Heating		0.55/0.59/0.63	0.44/0.47/0.50
External finish			Galvanized steel plate (Lower part drain pan painting N1.5)	
Connectable outdoor unit			PURY-(E)P200/250/300/350YHM-A(-BS) PQRY-P200/250/300YHM-A	
Indoor unit capacity connectable to 1 branch			Model P80 or smaller (Use optional joint pipe combing 2 branches when the total unit capacity exceeds 81.)	
External dimension H x W x D		mm (in.)	284 x 1,098 x 432 (11-3/16 x 43-1/4 x 17-1/32)	
Refrigerant piping diameter	Connectable outdoor unit capacity		**To outdoor unit**	
			High press. pipe	**Low press. pipe**
		to P200 mm (in.) O.D.	15.88 (5/8) Brazed	19.05 (3/4) Brazed
		P250/P300 mm (in.) O.D.	19.05 (3/4) Brazed	22.2 (7/8) Brazed
		to P350 mm (in.) O.D.	19.05 (3/4) Brazed	28.58 (1-1/8) Brazed
			To indoor unit	
			Liquid pipe	**Gas pipe**
		mm (in.) O.D.	Indoor unit Model 50 or smaller 6.35 (1/4) Brazed bigger than 50 9.52 (3/8) Brazed (12.7 (1/2) with optional joint pipe used.)	Indoor unit Model 50 or smaller 12.7 (1/2) Brazed bigger than 50 15.88 (5/8) Brazed (19.05 (3/4) with optional joint pipe used.)
Field drain pipe size		mm (in.) O.D.	32 (1-1/4)	
Net weight		kg (lbs)	52 (115)	
Accessories			Drain Connection pipe (with flexible hose and insulation) Reducer	
Remark				

Note:
1. Installation/foundation work, electrical connection work, insulation work, power source switch, and other items shall be referred to the Installation Manual.
2. The equipment is for R410A refrigerant.
3. Install this product in a location where noise (refrigerant noise) emitted by the unit will not disturb the neighbors.
(For use in quiet environments with low background noise, position the BC CONTROLLER at least 5m away from any indoor units.)
4. Indoor units P100, P125, P140 can be connected to 1 branch. (In this case, cooling capacity decrease a little.)
5. Refrigerant piping diameter for connection of plural indoor units with 1 branch shall be referred to the Installation Manual.

Ref.: Spec_CMB-P1016V-G1

BC

Model name			CMB-P108V-GA1		CMB-P1010V-GA1	
Number of branch			8		10	
Power source			1-phase 220/230/240V			
			50Hz	60Hz	50Hz	60Hz
Power input (220/230/240)	Cooling	kW	0.127/0.144/0.161	0.102/0.115/0.127	0.156/0.177/0.198	0.126/0.141/0.156
	Heating	kW	0.060/0.068/0.076	0.048/0.054/0.060	0.075/0.085/0.095	0.060/0.068/0.075
Current (220/230/240)	Cooling	A	0.58/0.63/0.68	0.47/0.50/0.53	0.71/0.77/0.83	0.58/0.62/0.65
	Heating	A	0.28/0.30/0.32	0.22/0.24/0.25	0.35/0.37/0.40	0.28/0.30/0.32
External finish			Galvanized steel plate (Lower part drain pan painting N1.5)			
Connectable outdoor unit			PURY-(E)P200/250/300/350/400/450/500/550/600/650Y(S)HM-A(1)(-BS) PQRY-P200/250/300/400/450/500/550/600Y(S)HM-A			
Indoor unit capacity connectable to 1 branch			Model P80 or smaller (Use optional joint pipe combing 2 branches when the total unit capacity exceeds 81.)			
External dimension H x W x D		mm (in.)	289 x 1,110 x 520 (11-13/32 x 43-23/32 x 20-1/2)			
Refrigerant piping diameter	Connectable outdoor unit capacity		**To outdoor unit**			
			High press. pipe		**Low press. pipe**	
		to P200 mm (in.) O.D.	15.88 (5/8) Brazed		19.05 (3/4) Brazed	
		P250/P300 mm (in.) O.D.	19.05 (3/4) Brazed		22.2 (7/8) Brazed	
		to P350 mm (in.) O.D.	19.05 (3/4) Brazed		28.58 (1-1/8) Brazed	
		P400 to P500 mm (in.) O.D.	22.2 (7/8) Brazed		28.58 (1-1/8) Brazed	
		P550 to P650 mm (in.) O.D.	28.58 (1-1/8) Brazed		28.58 (1-1/8) Brazed	
			To indoor unit			
			Liquid pipe		**Gas pipe**	
		mm (in.) O.D.	Indoor unit Model 50 or smaller 6.35 (1/4) Brazed bigger than 50 9.52 (3/8) Brazed (12.7 (1/2) with optional joint pipe used.)		Indoor unit Model 50 or smaller 12.7 (1/2) Brazed bigger than 50 15.88 (5/8) Brazed (19.05 (3/4) with optional joint pipe used.)	
	Total indoor unit capacity connected to this Sub BC controller		**To other BC controller**			
			High press. pipe		**Low press. pipe**	
			Liquid pipe			
		to P200 mm (in.) O.D.	15.88 (5/8) Brazed		19.05 (3/4) Brazed	
			9.52 (3/8) Brazed			
		P201 to P300 mm (in.) O.D.	19.05 (3/4) Brazed		22.2 (7/8) Brazed	
			9.52 (3/8) Brazed			
		P301 to P350 mm (in.) O.D.	19.05 (3/4) Brazed		28.58 (1-1/8) Brazed	
			12.7 (1/2) Brazed			
Field drain pipe size		mm (in.) O.D.	32 (1-1/4)			
Net weight		kg (lbs)	43 (95)		48 (106)	
Accessories			Drain Connection pipe (with flexible hose and insulation) Reducer		Drain Connection pipe (with flexible hose and insulation) Reducer	
Remark						

Note:
1. Installation/foundation work, electrical connection work, insulation work, power source switch, and other items shall be referred to the Installation Manual.
2. The equipment is for R410A refrigerant.
3. Install this product in a location where noise (refrigerant noise) emitted by the unit will not disturb the neighbors.
(For use in quiet environments with low background noise, position the BC CONTROLLER at least 5m away from any indoor units.)
4. Indoor units P100, P125, P140 can be connected to 1 branch. (In this case, cooling capacity decrease a little.)
5. Refrigerant piping diameter for connection of plural indoor units with 1 branch shall be referred to the Installation Manual.

Ref.: Spec_CMB-P108-1010V-GA1

BC

Model name			CMB-P1013V-GA1		CMB-P1016V-GA1	
Number of branch			13		16	
Power source			1-phase 220/230/240V			
			50Hz	60Hz-	50Hz	60Hz-
Power input (220/230/240)	Cooling	kW	0.201/0.228/0.255	0.162/0.182/0.201	0.246/0.279/0.312	0.198/0.222/0.246
	Heating	kW	0.097/0.110/0.123	0.078/0.088/0.097	0.119/0.135/0.151	0.096/0.108/0.119
Current (220/230/240)	Cooling	A	0.92/1.00/1.07	0.74/0.80/0.84	1.12/1.22/1.30	0.90/0.97/1.03
	Heating	A	0.45/0.48/0.52	0.36/0.39/0.41	0.55/0.59/0.63	0.44/0.47/0.50
External finish			Galvanized steel plate (Lower part drain pan painting N1.5)			
Connectable outdoor unit			PURY-(E)P200/250/300/350/400/450/500/550/600/650Y(S)HM-A(1)(-BS) PQRY-P200/250/300/400/450/500/550/600Y(S)HM-A			
Indoor unit capacity connectable to 1 branch			Model P80 or smaller (Use optional joint pipe combing 2 branches when the total unit capacity exceeds 81.)			
External dimension H x W x D		mm (in.)	289 x 1,110 x 520 (11-13/32 x 43-23/32 x 20-1/2)			
Refrigerant piping diameter	Connectable outdoor unit capacity		**To outdoor unit**			
			High press. pipe		**Low press. pipe**	
		to P200 mm (in.) O.D.	15.88 (5/8) Brazed		19.05 (3/4) Brazed	
		P250/P300 mm (in.) O.D.	19.05 (3/4) Brazed		22.2 (7/8) Brazed	
		to P350 mm (in.) O.D.	19.05 (3/4) Brazed		28.58 (1-1/8) Brazed	
		P400 to P500 mm (in.) O.D.	22.2 (7/8) Brazed		28.58 (1-1/8) Brazed	
		P550 to P650 mm (in.) O.D.	28.58 (1-1/8) Brazed		28.58 (1-1/8) Brazed	
			To indoor unit			
			Liquid pipe		**Gas pipe**	
		mm (in.) O.D.	Indoor unit Model 50 or smaller 6.35 (1/4) Brazed bigger than 50 9.52 (3/8) Brazed (12.7 (1/2) with optional joint pipe used.)		Indoor unit Model 50 or smaller 12.7 (1/2) Brazed bigger than 50 15.88 (5/8) Brazed (19.05 (3/4) with optional joint pipe used.)	
	Total indoor unit capacity connected to this Sub BC controller		**To other BC controller**			
			High press. pipe		**Low press. pipe**	
			Liquid pipe			
		to P200 mm (in.) O.D.	15.88 (5/8) Brazed		19.05 (3/4) Brazed	
			9.52 (3/8) Brazed			
		P201 to P300 mm (in.) O.D.	19.05 (3/4) Brazed		22.2 (7/8) Brazed	
			9.52 (3/8) Brazed			
		P301 to P350 mm (in.) O.D.	19.05 (3/4) Brazed		28.58 (1-1/8) Brazed	
			12.7 (1/2) Brazed			
Field drain pipe size		mm (in.) O.D.	32 (1-1/4)			
Net weight		kg (lbs)	55 (122)		62 (137)	
Accessories			Drain Connection pipe (with flexible hose and insulation) Reducer		Drain Connection pipe (with flexible hose and insulation) Reducer	
Remark						

Note:
1. Installation/foundation work, electrical connection work, insulation work, power source switch, and other items shall be referred to the Installation Manual.
2. The equipment is for R410A refrigerant.
3. Install this product in a location where noise (refrigerant noise) emitted by the unit will not disturb the neighbors.
(For use in quiet environments with low background noise, position the BC CONTROLLER at least 5m away from any indoor units.)
4. Indoor units P100, P125, P140 can be connected to 1 branch. (In this case, cooling capacity decrease a little.)
5. Refrigerant piping diameter for connection of plural indoor units with 1 branch shall be referred to the Installation Manual.

Ref.: Spec_CMB-P1013-1016V-GA1

BC

Model name			**CMB-P1016V-HA1**	
Number of branch			16	
Power source			1-phase 220/230/240V	
			50Hz	60Hz
Power input (220/230/240)	Cooling	kW	0.246/0.279/0.312	0.198/0.222/0.246
	Heating		0.119/0.135/0.151	0.096/0.108/0.119
Current (220/230/240)	Cooling	A	1.12/1.22/1.30	0.90/0.97/1.03
	Heating		0.55/0.59/0.63	0.44/0.47/0.50
External finish			Galvanized steel plate (Lower part drain pan painting N1.5)	
Connectable outdoor unit			PURY-P700/750/800YSHM-A(-BS)	
Indoor unit capacity connectable to 1 branch			Model P80 or smaller (Use optional joint pipe combing 2 branches when the total unit capacity exceeds 81.)	
External dimension H x W x D		mm (in.)	289 x 1,110 x 520 (11-13/32 x 43-23/32 x 20-1/2)	
Refrigerant piping diameter	Connectable outdoor unit capacity		**To outdoor unit**	
			High press. pipe	**Low press. pipe**
		P700/P750/P800 mm (in.) O.D.	28.58 (1-1/8) Brazed	34.93 (1-3/8) Brazed
			To indoor unit	
			Liquid pipe	**Gas pipe**
		mm (in.) O.D.	Indoor unit Model 50 or smaller 6.35 (1/4) Brazed bigger than 50 9.52 (3/8) Brazed (12.7 (1/2) with optional joint pipe used.)	Indoor unit Model 50 or smaller 12.7 (1/2) Brazed bigger than 50 15.88 (5/8) Brazed (19.05 (3/4), 22.2 (7/8) with optional joint pipe used.)
	Total indoor unit capacity connected to this Sub BC controller		**To other BC controller**	
			High press. pipe	**Low press. pipe**
			Liquid pipe	
		to P200 mm (in.) O.D.	15.88 (5/8) Brazed	19.05 (3/4) Brazed
			9.52 (3/8) Brazed	
		P201 to P300 mm (in.) O.D.	19.05 (3/4) Brazed	22.2 (7/8) Brazed
			9.52 (3/8) Brazed	
		P301 to P350 mm (in.) O.D.	19.05 (3/4) Brazed	28.58 (1-1/8) Brazed
			12.7 (1/2) Brazed	
		P351 to P400 mm (in.) O.D.	22.2 (7/8) Brazed	28.58 (1-1/8) Brazed
			12.7 (1/2) Brazed	
		P401 to P450 mm (in.) O.D.	22.2 (7/8) Brazed	28.58 (1-1/8) Brazed
			15.88 (5/8) Brazed	
Field drain pipe size		mm (in.) O.D.	32 (1-1/4)	
Net weight		kg (lbs)	69 (153)	
Accessories			Drain Connection pipe (with flexible hose and insulation) Reducer	
Remark				

Note:
1. Installation/foundation work, electrical connection work, insulation work, power source switch, and other items shall be referred to the Installation Manual.
2. The equipment is for R410A refrigerant.
3. When using an outdoor unit -28HP(P700) or more, use this product.
4. Install this product in a location where noise (refrigerant noise) emitted by the unit will not disturb the neighbors.
(For use in quiet environments with low background noise, position the BC CONTROLLER at least 5m away from any indoor units.)
5. Indoor units P100, P125, P140 can be connected to 1 branch. (In this case, cooling capacity decrease a little.)
6. Refrigerant piping diameter for connection of plural indoor units with 1 branch shall be referred to the Installation Manual.

Ref.: Spec_CMB-P1016V-HA1

BC

1. SPECIFICATIONS

Model name			CMB-P104V-GB1		CMB-P108V-GB1	
Number of branch			4		8	
Power source			1-phase 220/230/240V			
			50Hz	60Hz	50Hz	60Hz
Power input (220/230/240)	Cooling	kW	0.060/0.068/0.076	0.048/0.054/0.060	0.119/0.135/0.151	0.096/0.108/0.119
	Heating	kW	0.030/0.034/0.038	0.024/0.027/0.030	0.060/0.068/0.076	0.048/0.054/0.060
Current (220/230/240)	Cooling	A	0.28/0.30/0.32	0.22/0.24/0.25	0.55/0.59/0.63	0.44/0.47/0.50
	Heating	A	0.14/0.15/0.16	0.11/0.12/0.13	0.28/0.30/0.32	0.22/0.24/0.25
External finish			Galvanized steel plate (Lower part drain pan painting N1.5)			
Connectable BC controller			CMB-P108/1010/1013/1016V-GA1, CMB-P1016V-HA1 CMB-P104/108V-GB1, CMB-P1016V-HB1			
Indoor unit capacity connectable to 1 branch			Model P80 or smaller (Use optional joint pipe combining 2 branches when the total unit capacity exceeds 81.)			
External dimension H x W x D		mm (in.)	284 x 648 x 432 (11-3/16 x 25-17/32 x 17-1/32)			
Refrigerant piping diameter			**To indoor unit**			
			Liquid pipe		**Gas pipe**	
		mm (in.) O.D.	Indoor unit Model 50 or smaller 6.35 (1/4) Brazed bigger than 50 9.52 (3/8) Brazed (12.7 (1/2) with optional joint pipe used.)		Indoor unit Model 50 or smaller 12.7 (1/2) Brazed bigger than 50 15.88 (5/8) Brazed (19.05 (3/4) with optional joint pipe used.)	
	Total indoor unit capacity connected to this Sub BC controller		**To other BC controller**			
			High press. pipe		**Low press. pipe**	
			Liquid pipe			
		to P200	15.88 (5/8) Brazed		19.05 (3/4) Brazed	
		mm (in.) O.D.	9.52 (3/8) Brazed			
		P201 to P300	19.05 (3/4) Brazed		22.2 (7/8) Brazed	
		mm (in.) O.D.	9.52 (3/8) Brazed			
		P301 to P350	19.05 (3/4) Brazed		28.58 (1-1/8) Brazed	
		mm (in.) O.D.	12.7 (1/2) Brazed			
Field drain pipe size		mm (in.) O.D.	32 (1-1/4)			
Net weight		kg (lbs)	22 (49)		32 (71)	
Accessories			Drain Connection pipe (with flexible hose and insulation) Reducer		Drain Connection pipe (with flexible hose and insulation) Reducer	
Remark						

Note:

1. Installation/foundation work, electrical connection work, insulation work, power source switch, and other items shall be referred to the Installation Manual.
2. The equipment is for R410A refrigerant.
3. For sub BC controller CMB-P-V-GB1 the connectable indoor unit capacities may sum to equal that of a P350 unit or less. However, if two sub controllers are used the TOTAL sum of connectable units connected to BOTH sub controllers must also not exceed that a P350 unit.
4. To use the Sub BC controller, the Main BC controller is necessary to be connected with.
5. Install this product in a location where noise (refrigerant noise) emitted by the unit will not disturb the neighbors. (For use in quiet environments with low background noise, position the BC CONTROLLER at least 5m away from any indoor units.)
6. Indoor units P100, P125, P140 can be connected to 1 branch. (In this case, cooling capacity decrease a little.)
7. Refrigerant piping diameter for connection of plural indoor units with 1 branch shall be referred to the Installation Manual.

Ref.: Spec_CMB-P104-108V-GB1

BC

1. SPECIFICATIONS

Model name			**CMB-P1016V-HB1**	
Number of branch			16	
Power source			1-phase 220/230/240V	
			50Hz	60Hz
Power input (220/230/240)	Cooling	kW	0.237/0.269/0.301	0.192/0.216/0.237
	Heating		0.119/0.135/0.151	0.096/0.108/0.120
Current (220/230/240)	Cooling	A	1.08/1.17/1.26	0.88/0.94/0.99
	Heating		0.55/0.59/0.63	0.44/0.47/0.50
External finish			Galvanized steel plate (Lower part drain pan painting N1.5)	
Connectable BC controller		Main BC	CMB-P108/1010/1013/1016V-GA1,CMB-P1016V-HA1	
		Sub BC	CMB-P104/108V-GB1, CMB-P1016V-HB1	
Indoor unit capacity connectable to 1 branch			Model P80 or smaller (Use optional joint pipe combining 2 branches when the total unit capacity exceeds 81.)	
External dimension H x W x D		mm (in.)	284 x 1,098 x 432 (11-3/16 x 43-1/4 x 17-1/32)	
Refrigerant piping diameter	Connectable outdoor unit capacity		**To outdoor unit**	
			High press. pipe	**Low press. pipe**
		mm (in.) O.D.	-	-
			To indoor unit	
			Liquid pipe	**Gas pipe**
		mm (in.) O.D.	Indoor unit Model 50 or smaller 6.35 (1/4) Brazed bigger than 50 9.52 (3/8) Brazed (12.7 (1/2) with optional joint pipe used.)	Indoor unit Model 50 or smaller 12.7 (1/2) Brazed bigger than 50 15.88 (5/8) Brazed (19.05 (3/4), 22.2 (7/8) with optional joint pipe used.)
	Total indoor unit capacity connected to this Sub BC controller		**To other BC controller**	
			High press. pipe	**Low press. pipe**
			Liquid pipe	
		to P200 mm (in.) O.D.	15.88 (5/8) Brazed	19.05 (3/4) Brazed
			9.52 (3/8) Brazed	
		P201 to P300 mm (in.) O.D.	19.05 (3/4) Brazed	22.2 (7/8) Brazed
			9.52 (3/8) Brazed	
		P301 to P350 mm (in.) O.D.	19.05 (3/4) Brazed	28.58 (1-1/8) Brazed
			12.7 (1/2) Brazed	
		P351 to P400 mm (in.) O.D.	22.2 (7/8) Brazed	28.58 (1-1/8) Brazed
			12.7 (1/2) Brazed	
		P401 to P450 mm (in.) O.D.	22.2 (7/8) Brazed	28.58 (1-1/8) Brazed
			15.88 (5/8) Brazed	
Field drain pipe size		mm (in.) O.D.	32 (1-1/4)	
Net weight		kg (lbs)	55 (122)	
Accessories			Drain Connection pipe (with flexible hose and insulation) Reducer	
Remark				

Note:

1. Installation/foundation work, electrical connection work, insulation work, power source switch, and other items shall be referred to the Installation Manual.
2. The equipment is for R410A refrigerant.
3. For sub BC controller CMB-P1016V-HB1 the connectable indoor unit capacities may sum to equal that of a P350 unit or less. However, if two sub controllers are used the TOTAL sum of connectable units connected to BOTH sub controllers must also not exceed that a P450 unit.
4. To use the Sub BC controller, the Main BC controller is necessary to be connected with.
5. Install this product in a location where noise (refrigerant noise) emitted by the unit will not disturb the neighbors.
   (For use in quiet environments with low background noise, position the BC CONTROLLER at least 5m away from any indoor units.)
6. Indoor units P100, P125, P140 can be connected to 1 branch. (In this case, cooling capacity decrease a little.)
7. Refrigerant piping diameter for connection of plural indoor units with 1 branch shall be referred to the Installation Manual.

Ref.: Spec_CMB-P1016V-HB1

BC

CMB-P104, 105, 106, 108, 1010, 1013, 1016V-G1

Unit : mm

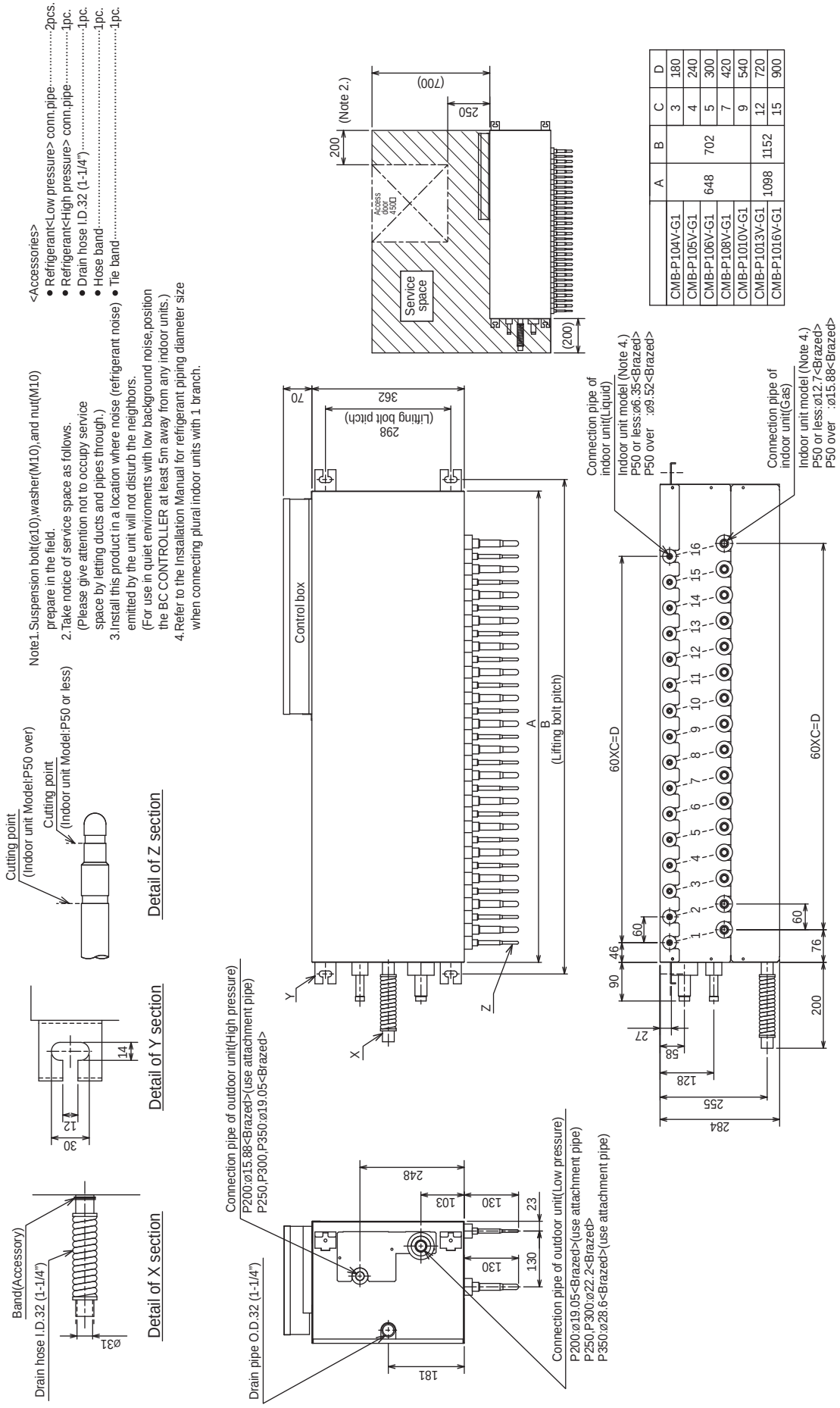

	A	B	C	D
CMB-P104V-G1	648	702	3	180
CMB-P105V-G1			4	240
CMB-P106V-G1			5	300
CMB-P108V-G1			7	420
CMB-P1010V-G1			9	540
CMB-P1013V-G1	1098	1152	12	720
CMB-P1016V-G1			15	900

BC

CMB-P108, 1010, 1013, 1016V-GA1

Unit : mm

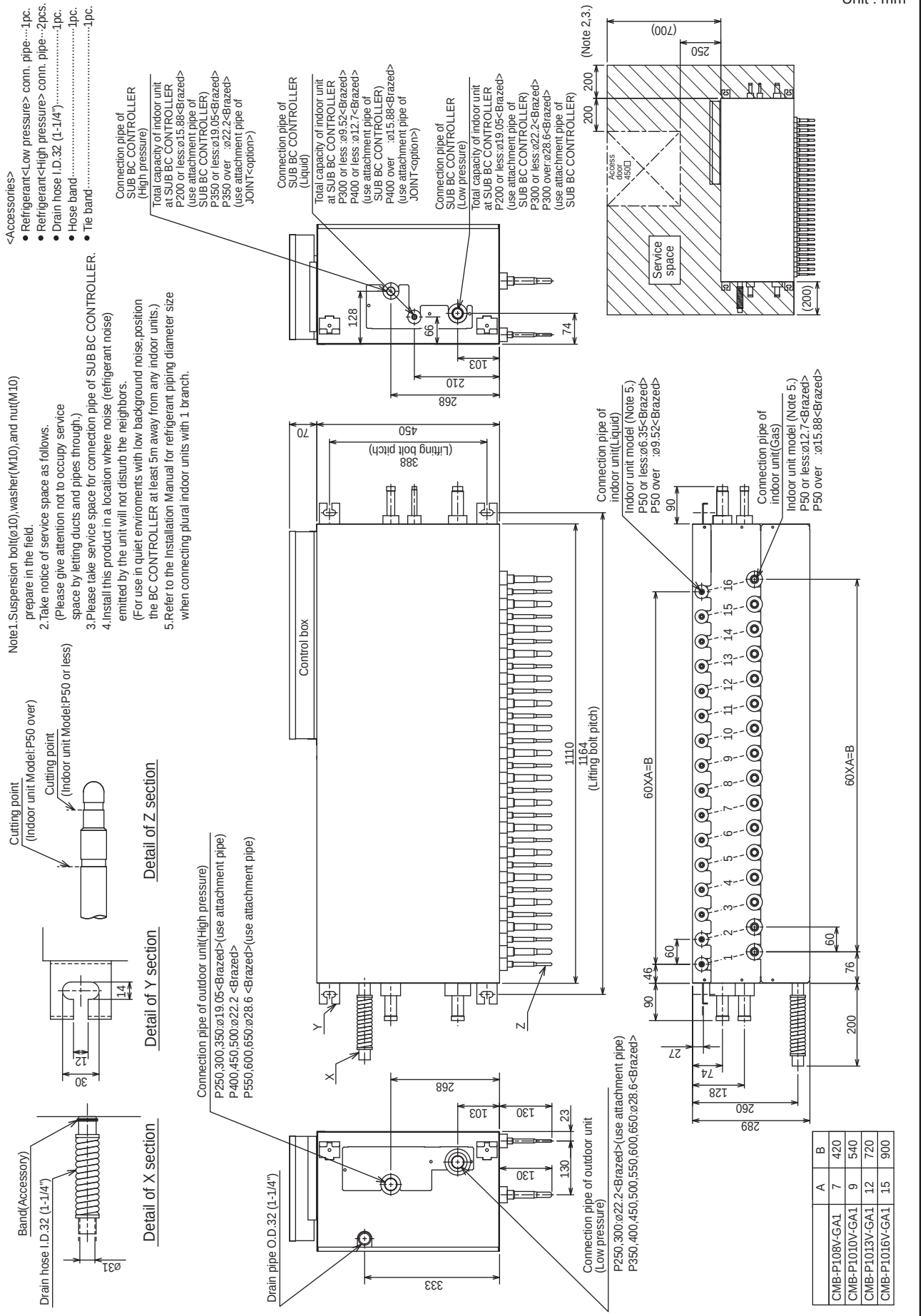

	A	B
CMB-P108V-GA1	7	420
CMB-P1010V-GA1	9	540
CMB-P1013V-GA1	12	720
CMB-P1016V-GA1	15	900

BC

2. EXTERNAL DIMENSIONS

CMB-P1016V-HA1

Unit : mm

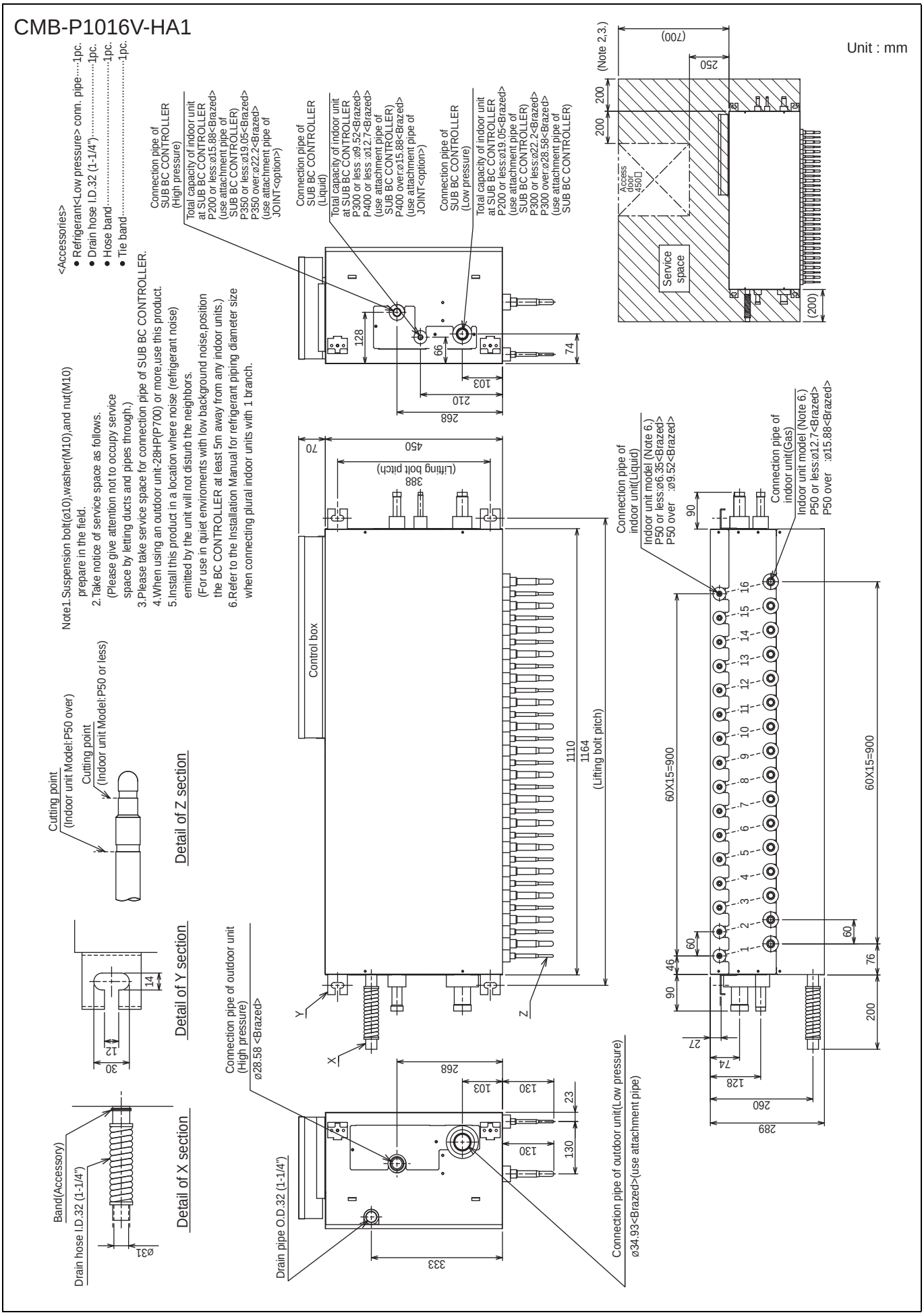

BC

CMB-P104, 108V-GB1

Unit : mm

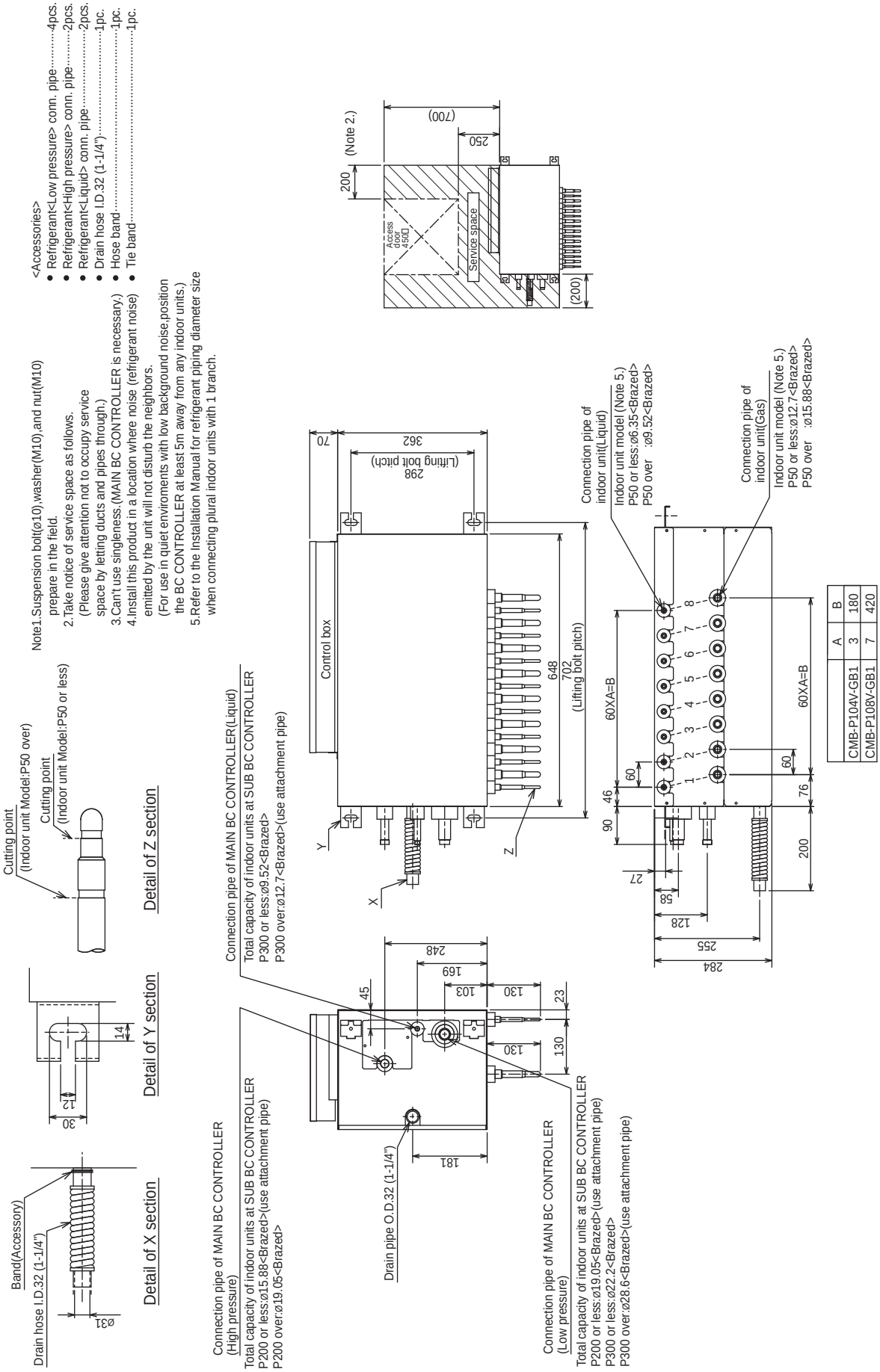

	A	B
CMB-P104V-GB1	3	180
CMB-P108V-GB1	7	420

BC

2. EXTERNAL DIMENSIONS

CMB-P1016V-HB1

Unit : mm

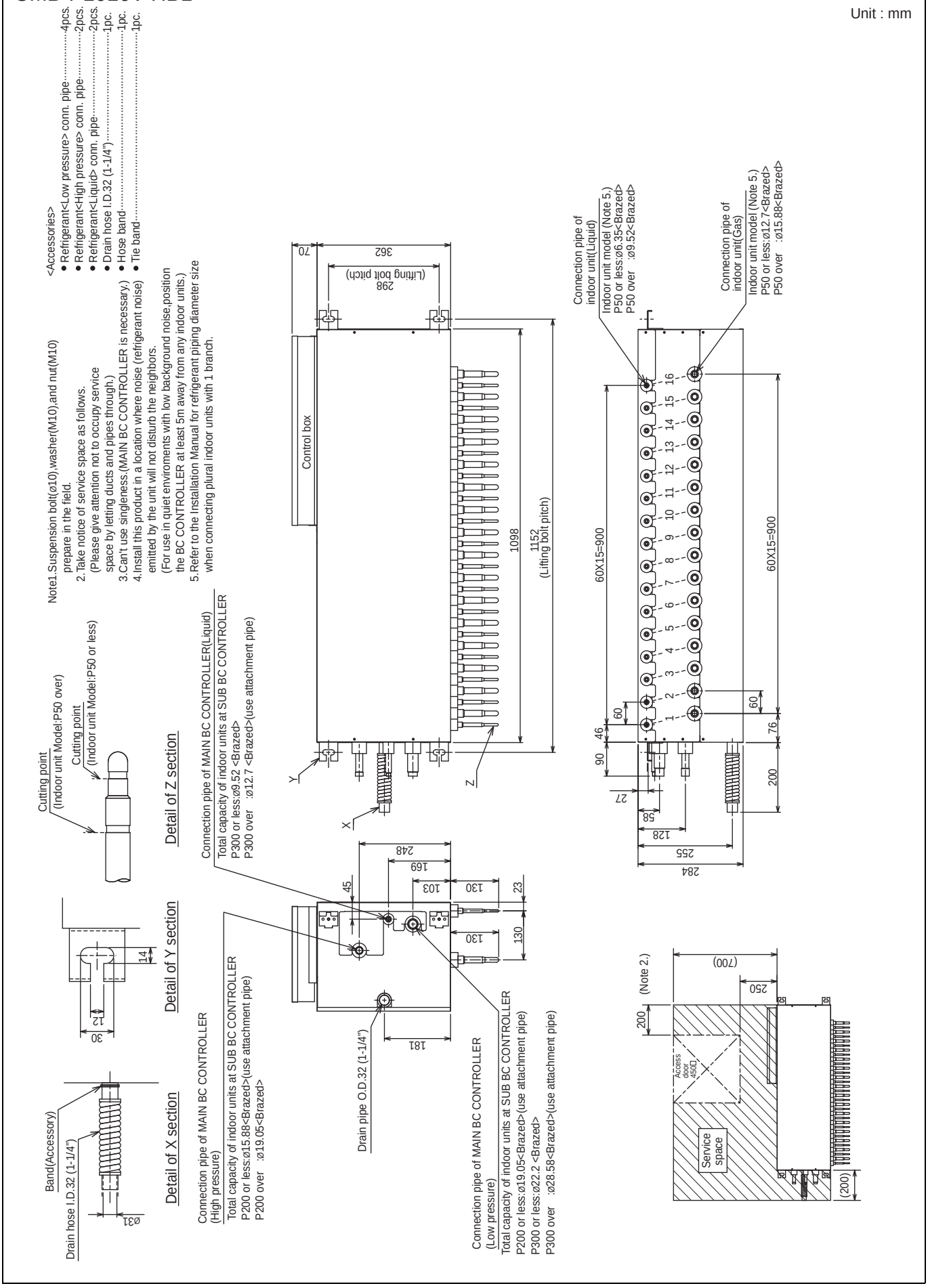

BC

CMB-P104V-G1

(Symbol explanation)

Symbol	Name
TR	Transformer
TH11,12,15,16	Thermister sensor
LEV1,3	Expansion valve
PS1,3	Pressure sensor
CONT.B	Circuit board / BC controller
TB01	Terminal block (for power source)
TB02	Terminal block (for Transmission)
SV1~4A,B,C	Solenoid valve
SVM1	Solenoid valve
T1~4	Terminal
F01	Fuse AC250V 6.3A F

Note: 1.TB02 is transmission terminal block. Never connect power line to it.
2.The initial set values of switch on CONT.B are as follows.
SW1:0
SW2:0

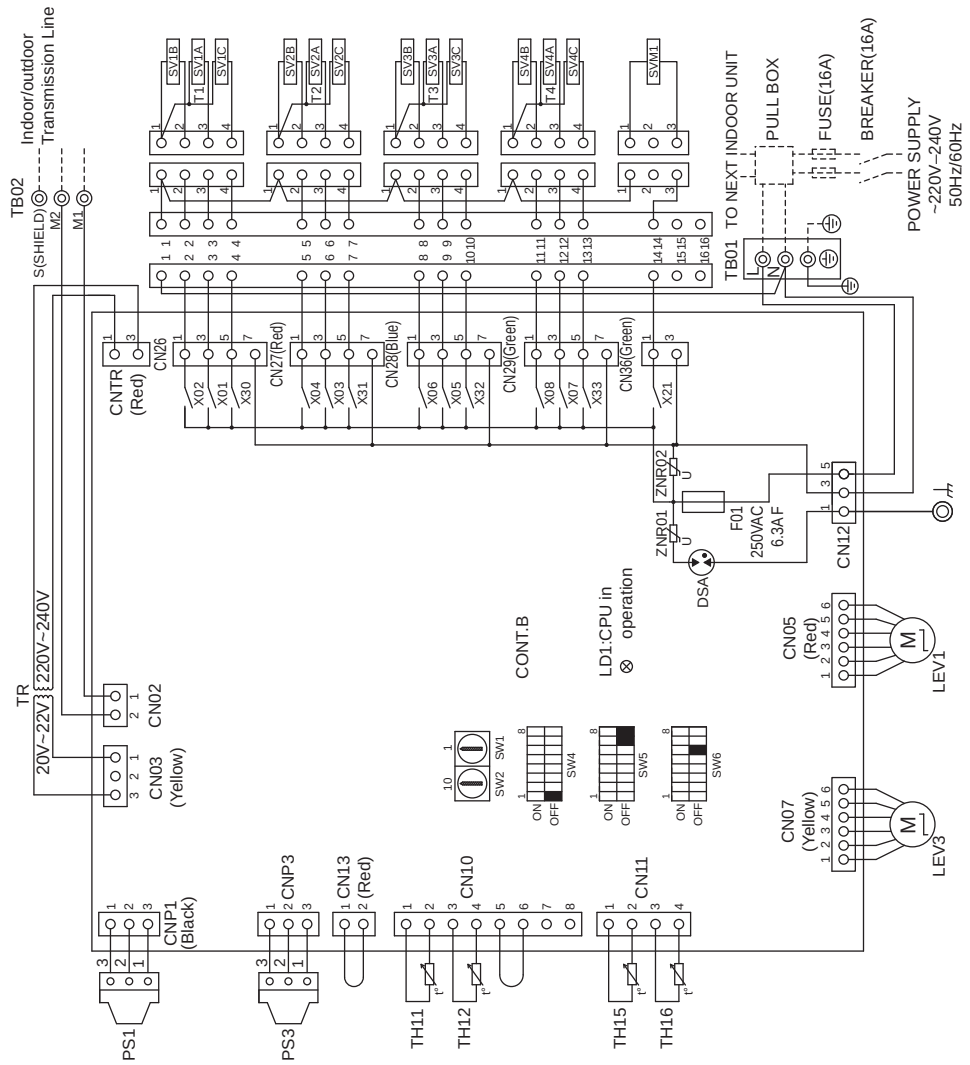

CMB-P105,106V-G1

(Symbol explanation)

Symbol	Name
TR	Transformer
TH11,12,15,16	Thermister sensor
LEV1,3	Expansion valve
PS1,3	Pressure sensor
CONT.B	Circuit board / BC controller
TB01	Terminal block (for power source)
TB02	Terminal block (for Transmission)
SV1~6A,B,C	Solenoid valve
SVM1	Solenoid valve
T1~6	Terminal
F01	Fuse AC250V 6.3A F

Note: 1. TB02 is transmission terminal block. Never connect power line to it.
2. The initial set values of switch on CONT.B are as follows.
SW1:0
SW2:0

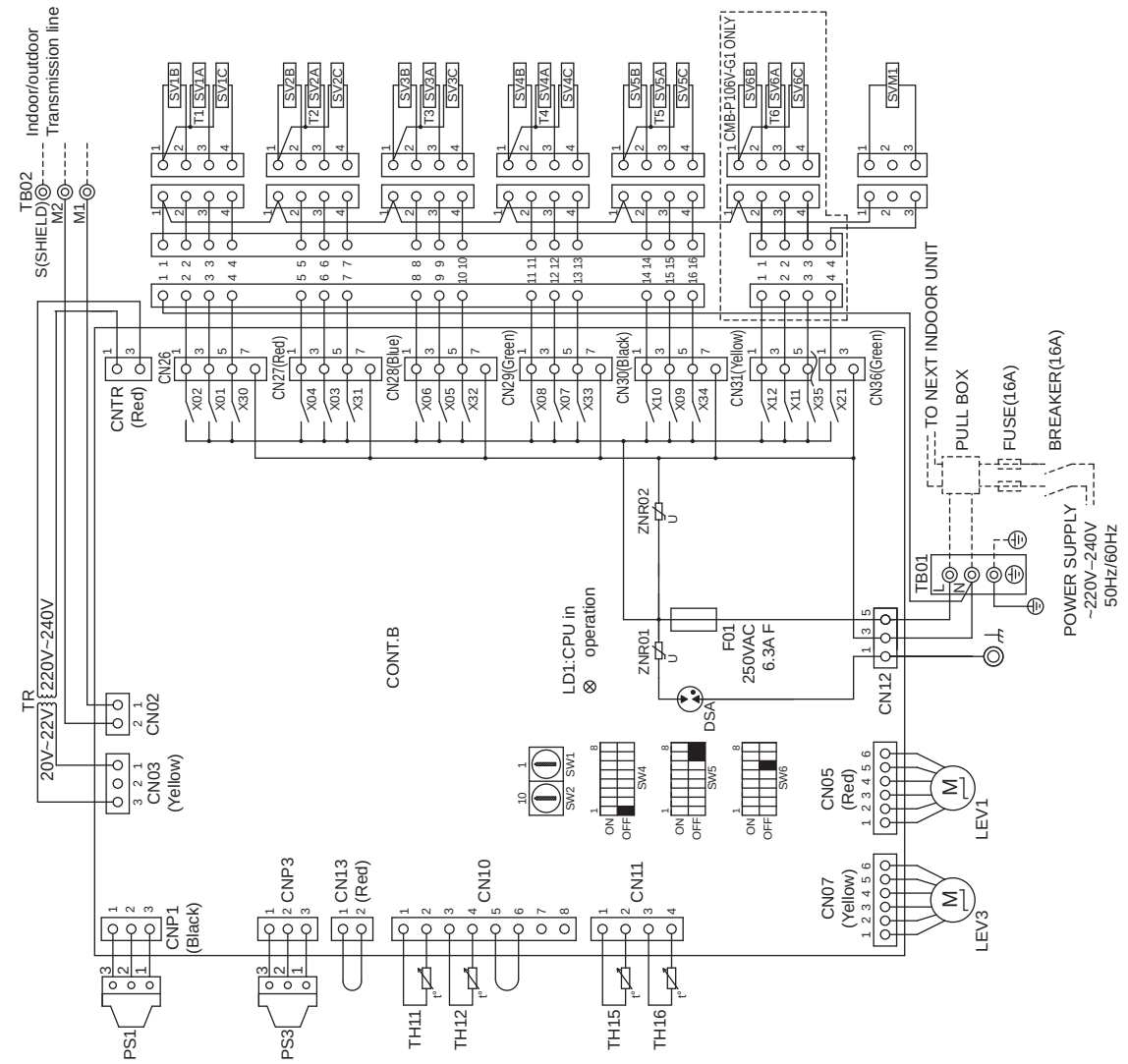

BC

CMB-P108,1010V-G1

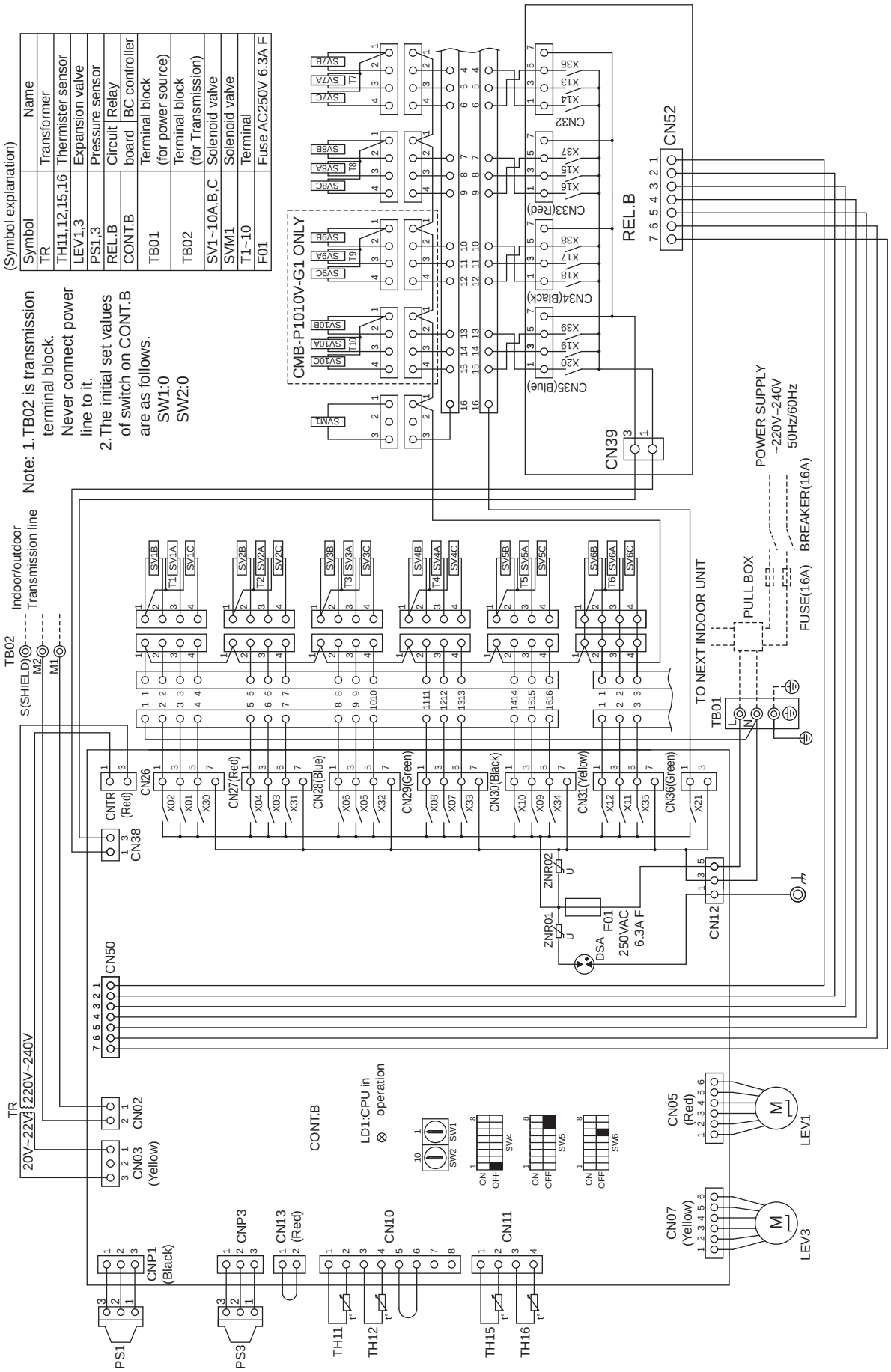

BC

CMB-P1013,1016V-G1

(Symbol explanation)

Symbol	Name
TR	Transformer
TH11,12,15,16	Thermister sensor
LEV1,3	Expansion valve
PS1,3	Pressure sensor
REL.B	Circuit Relay
CONT.B	board BC controller
TB01	Terminal block (for power source)
TB02	Terminal block (for Transmission)
SV1~16A,B,C	Solenoid valve
SVM1	Solenoid valve
T1~16	Terminal
F01	Fuse AC250V 6.3A F

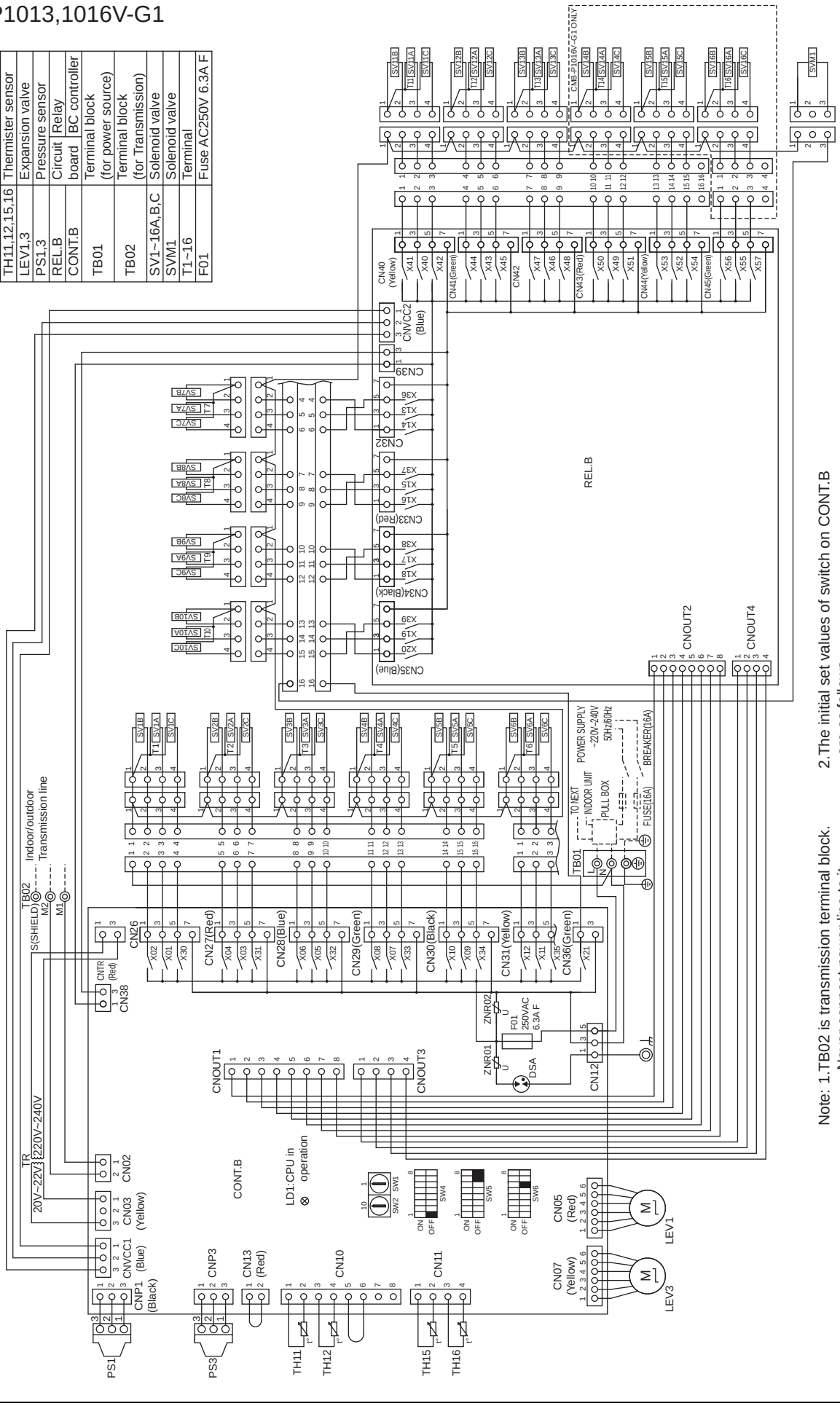

Note: 1.TB02 is transmission terminal block.
Never connect power line to it.

2.The initial set values of switch on CONT.B are as follows.
SW1:0
SW2:0

BC

CMB-P108,1010V-GA1

(Symbol explanation)

Symbol	Name
TR	Transformer
TH11,12,15,16	Thermister sensor
LEV1,3	Expansion valve
PS1,3	Pressure sensor
REL.B	Circuit Relay
CONT.B	board BC controller
TB01	Terminal block (for power source)
TB02	Terminal block (for Transmission)
SV1~10A,B,C	Solenoid valve
SVM1,2	Solenoid valve
T1~10	Terminal
F01	Fuse AC250V 6.3A F

Note: 1. TB02 is transmission terminal block. Never connect power line to it.
2. The initial set values of switch on CONT.B are as follows.
SW1:0
SW2:0

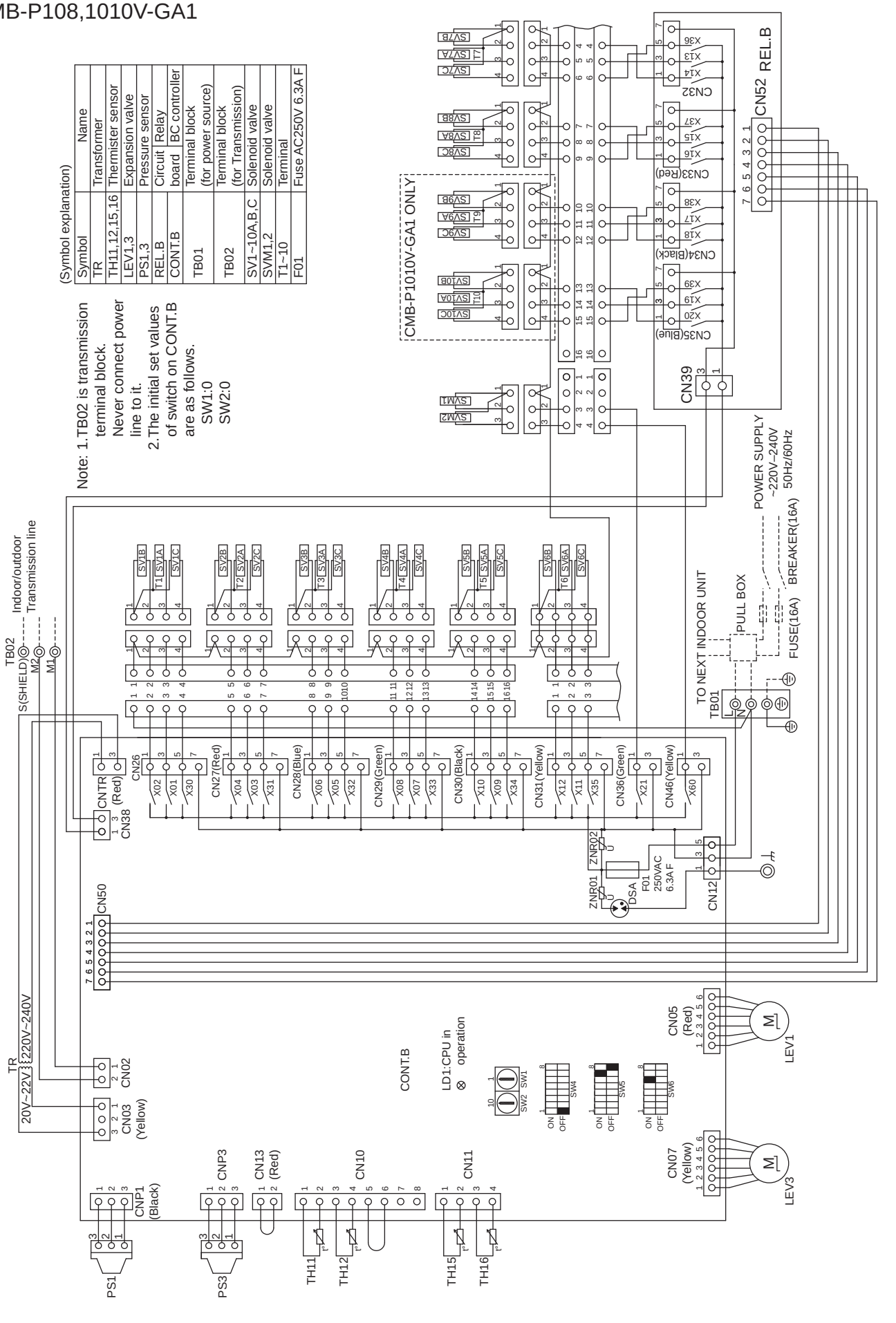

BC

CMB-P1013,1016V-GA1

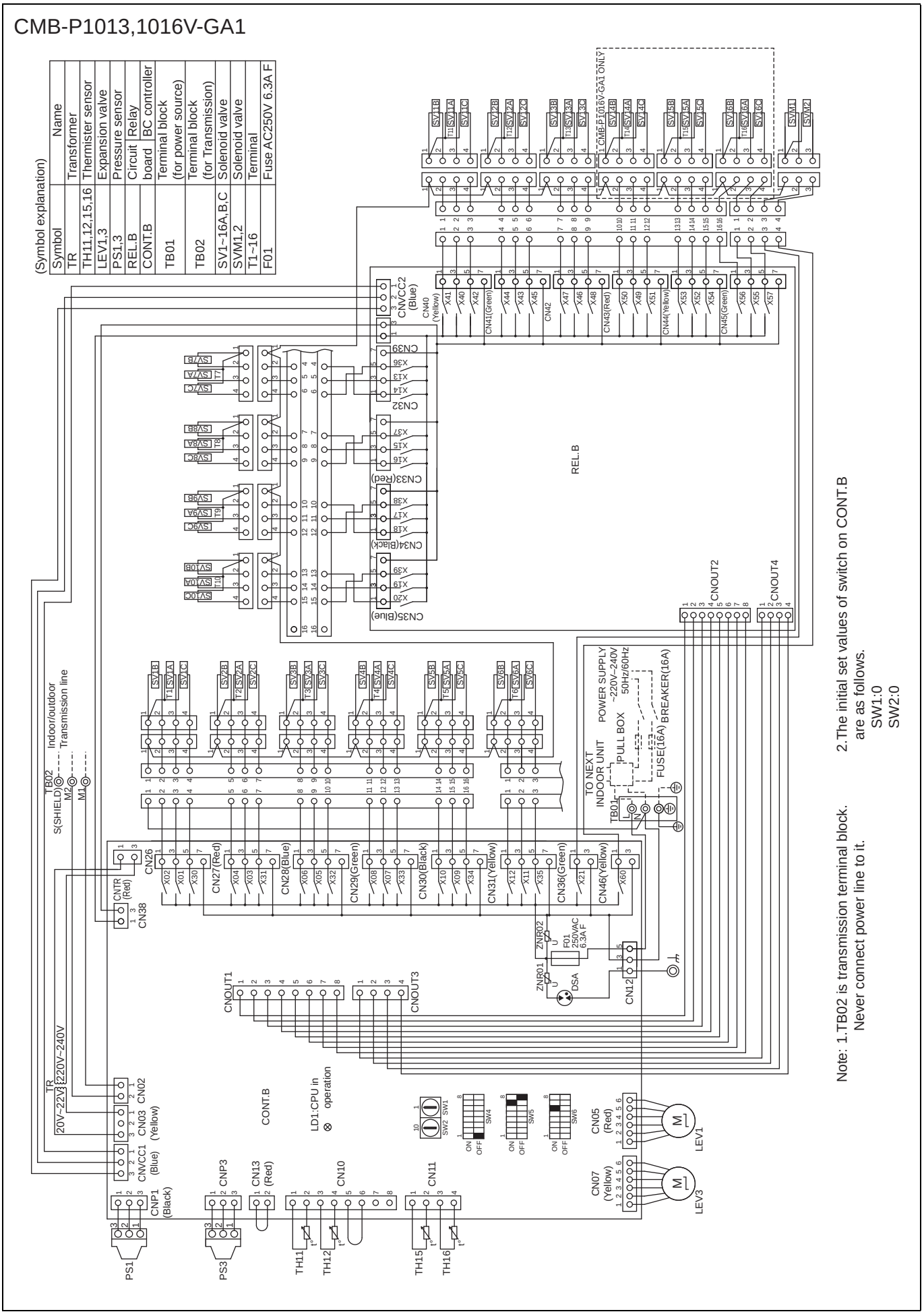

BC

CMB-P1016V-HA1

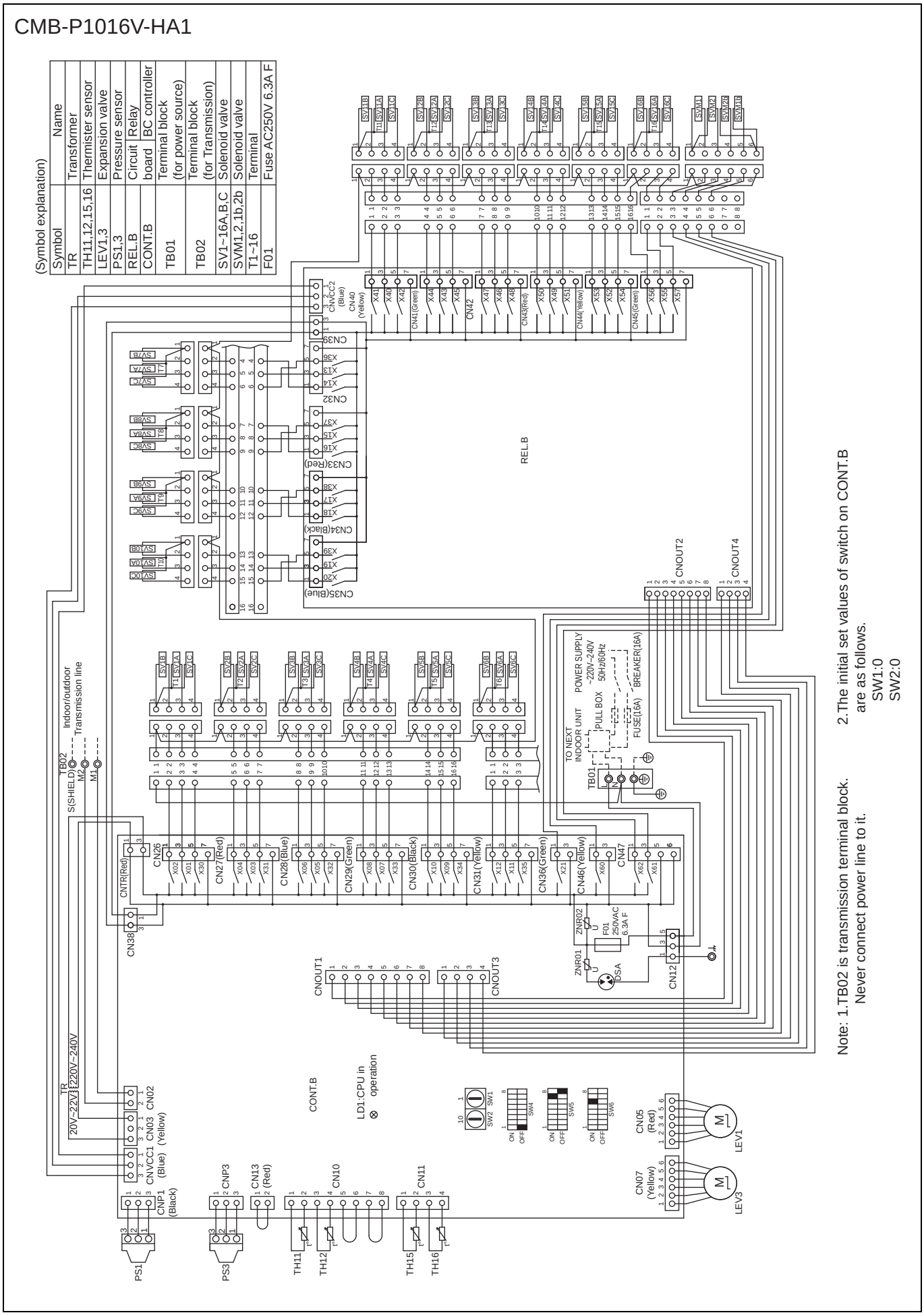

CMB-P104V-GB1

(Symbol explanation)

Symbol	Name
TR	Transformer
TH12,15	Thermister sensor
LEV3	Expansion valve
CONT.B	Circuit board / BC controller
TB01	Terminal block (for power source)
TB02	Terminal block (for Transmission)
SV1~4A,B,C	Solenoid valve
T1~4	Terminal
F01	Fuse AC250V 6.3A F

Note: 1. TB02 is transmission terminal block. Never connect power line to it.
2. The initial set values of switch on CONT.B are as follows.
SW1:0
SW2:0

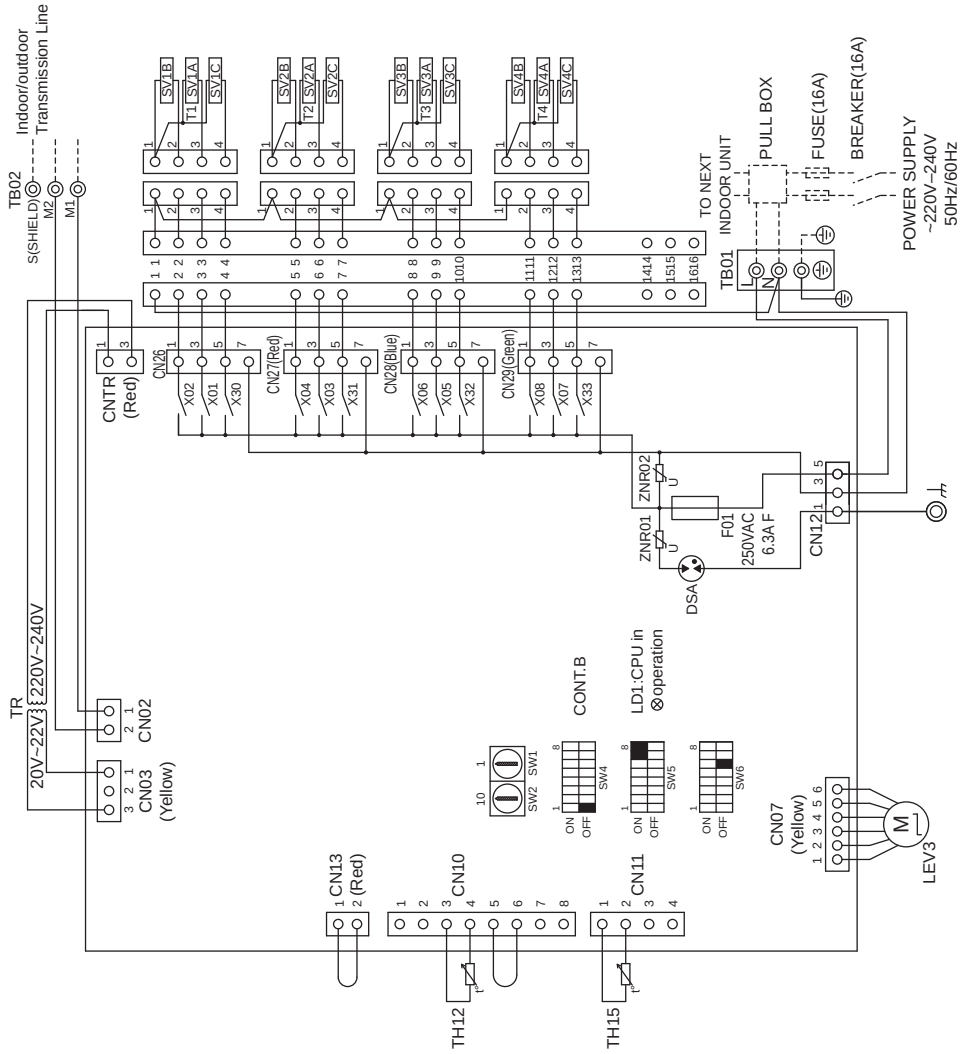

BC

CMB-P108V-GB1

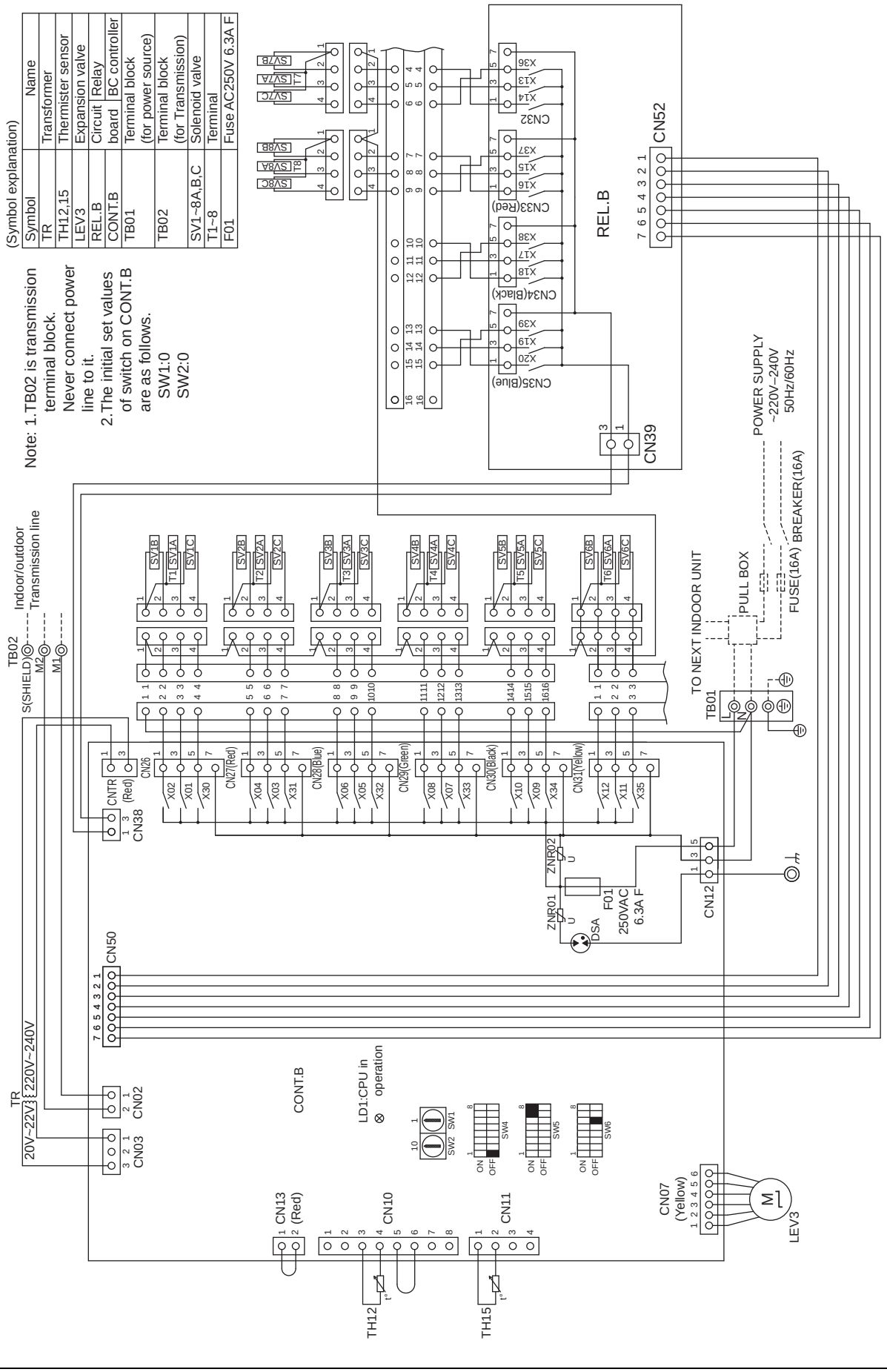

CMB-P1016V-HB1

(Symbol explanation)

Symbol	Name
TR	Transformer
TH12,15	Thermister sensor
LEV3	Expansion valve
REL.B	Circuit Relay board
CONT.B	BC controller
TB01	Terminal block (for power source)
TB02	Terminal block (for Transmission)
SV1~16A,B,C	Solenoid valve
T1~16	Terminal
F01	Fuse AC250V 6.3A F

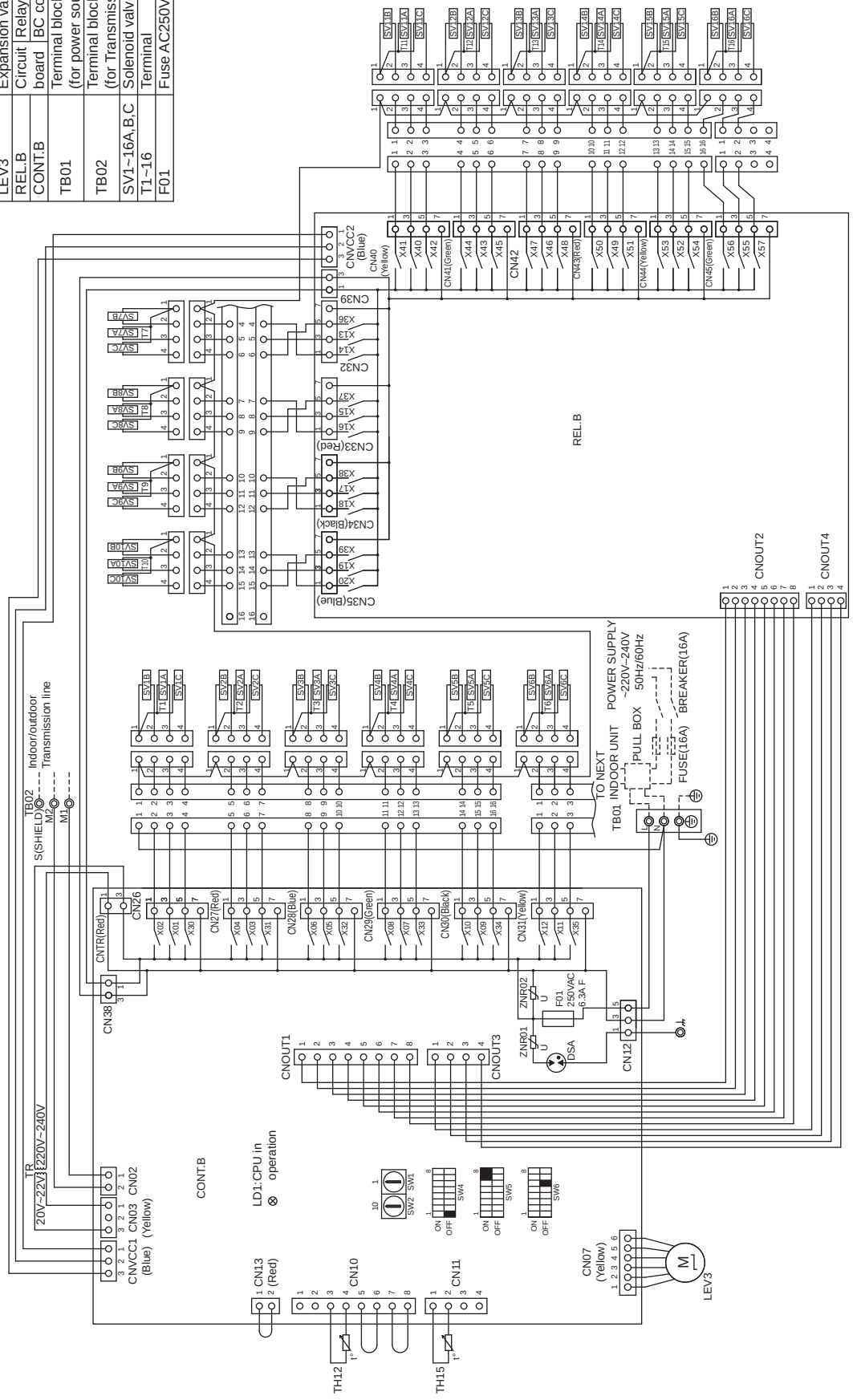

Note: 1.TB02 is transmission terminal block.
Never connect power line to it.

2.The initial set values of switch on CONT.B
are as follows.
SW1:0
SW2:0

BC

CAPACITY TABLES

The databook reader is supposed to refer specified Indoor unit at the tables to check if the designed capacity in enough or not for your situation.

1. Cooling capacity with Outdoor units

	PUHY-P200, 250YHM PUHY-EP200, 250YHM PURY-P200, 250YHM PURY-EP200, 250YHM	PUHY-P300-400YHM PUHY-EP300, 400Y(S)HM PURY-P300-400YHM PURY-EP300, 400Y(S)HM	PUHY-P450-650Y(S)HM PUHY-EP450-650YSHM PURY-P450-650YSHM PURY-EP450-600YSHM	PUHY-P700-800YSHM PUHY-EP700-800YSHM PURY-P700-800YSHM
PEFY-P-VMH-E PEFY-P-VMR-E-L/R PEFY-P-VMS1(L)-E	A1	A2	A3	A4
PEFY-P-VMA(L)-E	B1	B2	B3	B4
PMFY-P-VBM-E	D1	D2	D3	D4
PLFY-P-VLMD-E	E1	E2	E3	E4
PLFY-P-VCM-E PLFY-P-VBM-E	F1	F2	F3	F4
PCFY-P-VKM-E	G1	G2	G3	G4
PKFY-P-VBM-E PKFY-P-VHM-E PKFY-P-VKM-E	H1	H2	H3	H4
PFFY-P-VKM-E PFFY-P-VLEM-E PFFY-P-VLRM-E PFFY-P-VLRMM-E	I1	I2	I3	I4

	PUHY-P850-1250YSHM PUHY-EP850-900YSHM	PUHY-HP200-500Y(S)HM	PQHY-P200-900Y(S)HM PQRY-P200-600Y(S)HM	PUMY-P100, 125, 140YHMB,VHMB
PEFY-P-VMH-E PEFY-P-VMR-E-L/R PEFY-P-VMS1(L)-E	A5	A6	A7	A8
PEFY-P-VMA(L)-E	B5	B6	B7	B8
PMFY-P-VBM-E	D5	D6	D7	D8
PLFY-P-VLMD-E	E5	E6	E7	E8
PLFY-P-VCM-E PLFY-P-VBM-E	F5	F6	F7	F8
PCFY-P-VKM-E	G5	G6	G7	G8
PKFY-P-VBM-E PKFY-P-VHM-E PKFY-P-VKM-E	H5	H6	H7	H8
PFFY-P-VKM-E PFFY-P-VLEM-E PFFY-P-VLRM-E PFFY-P-VLRMM-E	I5	I6	I7	I8

* For the cooling capacity of PEFY-P-VMH-E-F, please refer to its own section.

2. Heating capacity with Outdoor units

	PUHY-P200, 250YHM PUHY-EP200, 250YHM PURY-P200, 250YHM PURY-EP200, 250YHM	PUHY-P300-400YHM PUHY-EP300, 400Y(S)HM PURY-P300-400YHM PURY-EP300, 400Y(S)HM	PUHY-P450-650Y(S)HM PUHY-EP450-650YSHM PURY-P450-650YSHM PURY-EP450-600YSHM	PUHY-P700-800YSHM PUHY-EP700-800YSHM PURY-P700-800YSHM
All Indoor units	X1	X2	X3	X4

	PUHY-P850-1250YSHM PUHY-EP850-900YSHM	PUHY-HP200-500Y(S)HM	PQHY-P200-900Y(S)HM PQRY-P200-600Y(S)HM	PUMY-P100, 125, 140YHMB,VHMB
All Indoor units	X5	X6	X7	X8

* For the heating capacity of PEFY-P-VMH-E-F, please refer to its own section.

CT

A1. Cooling capacity with PUHY-P200, 250YHM/PUHY-EP200, 250YHM PURY-P200, 250YHM/PURY-EP200, 250YHM

PEFY-P-VMH-E

CA : Capacity(kW) SHC : Sensible Heat Capacity(kW)

Model size (Rated kW)	Outdoor air temp.		Indoor air temp.													
			71 ˚FDB / 59˚FWB		73˚FDB / 61˚FWB		77˚FDB / 64˚FWB		81˚FDB / 66˚FWB		82˚FDB / 68˚FWB		86˚FDB / 72˚FWB		90˚FDB / 75˚FWB	
			21.5˚CDB / 15˚CWB		23˚CDB / 16˚CWB		25˚CDB / 18˚CWB		27˚CDB / 19˚CWB		28˚CDB / 20˚CWB		30˚CDB / 22˚CWB		32˚CDB / 24˚CWB	
	˚FDB	˚CDB	CA	SHC	CA	SHC	CA	SHC	CA	SHC	CA	SHC	CA	SHC	CA	SHC
40 (4.5)	68	20.0	4.3	3.3	4.4	3.4	4.7	3.3	4.9	3.4	5.0	3.5	5.3	3.5	5.7	3.4
	73	22.5	4.3	3.3	4.4	3.4	4.7	3.3	4.9	3.4	5.0	3.5	5.3	3.5	5.7	3.4
	77	25.0	4.3	3.3	4.4	3.4	4.7	3.3	4.9	3.4	5.0	3.5	5.3	3.5	5.6	3.4
	82	27.5	4.3	3.2	4.4	3.3	4.6	3.3	4.8	3.4	4.9	3.5	5.2	3.4	5.5	3.4
	86	30.0	4.2	3.2	4.3	3.3	4.6	3.3	4.7	3.3	4.8	3.4	5.0	3.4	5.4	3.3
	91	32.5	4.1	3.2	4.2	3.3	4.5	3.2	4.6	3.3	4.7	3.4	5.0	3.3	5.3	3.3
	95	35.0	4.0	3.1	4.1	3.2	4.4	3.2	4.5	3.2	4.6	3.4	4.9	3.3	5.2	3.3
	100	37.5	3.9	3.1	4.1	3.2	4.3	3.2	4.4	3.2	4.5	3.3	4.8	3.3	5.0	3.2
	104	40.0	3.9	3.1	4.0	3.2	4.2	3.1	4.3	3.2	4.5	3.3	4.7	3.2	5.0	3.2
	110	43.0	3.8	3.0	3.9	3.1	4.1	3.1	4.2	3.1	4.3	3.2	4.5	3.2	4.8	3.1
50 (5.6)	68	20.0	5.3	3.8	5.5	3.9	5.9	3.9	6.0	3.9	6.2	4.1	6.6	4.0	7.1	4.0
	73	22.5	5.3	3.8	5.5	3.9	5.9	3.9	6.0	3.9	6.2	4.1	6.6	4.0	7.1	4.0
	77	25.0	5.3	3.8	5.5	3.9	5.9	3.9	6.0	3.9	6.2	4.1	6.6	4.0	6.9	3.9
	82	27.5	5.3	3.8	5.5	3.9	5.8	3.9	5.9	3.9	6.1	4.0	6.4	4.0	6.8	3.9
	86	30.0	5.2	3.8	5.3	3.8	5.7	3.8	5.8	3.8	6.0	4.0	6.3	3.9	6.7	3.9
	91	32.5	5.1	3.7	5.3	3.8	5.5	3.8	5.7	3.8	5.9	3.9	6.2	3.9	6.6	3.8
	95	35.0	5.0	3.7	5.2	3.8	5.5	3.7	5.6	3.7	5.7	3.9	6.0	3.8	6.4	3.7
	100	37.5	4.9	3.6	5.0	3.7	5.3	3.7	5.5	3.7	5.6	3.8	5.9	3.8	6.3	3.7
	104	40.0	4.8	3.6	5.0	3.7	5.3	3.6	5.4	3.7	5.5	3.8	5.8	3.7	6.2	3.7
	110	43.0	4.7	3.5	4.8	3.6	5.1	3.6	5.2	3.6	5.4	3.7	5.7	3.7	6.0	3.6
63 (7.1)	68	20.0	6.7	5.0	7.0	5.2	7.5	5.1	7.7	5.2	7.9	5.4	8.4	5.3	9.0	5.3
	73	22.5	6.7	5.0	7.0	5.2	7.5	5.1	7.7	5.2	7.9	5.4	8.4	5.3	9.0	5.3
	77	25.0	6.7	5.0	7.0	5.2	7.5	5.1	7.7	5.2	7.8	5.4	8.3	5.3	8.8	5.2
	82	27.5	6.7	5.0	6.9	5.1	7.3	5.1	7.5	5.1	7.7	5.3	8.1	5.2	8.7	5.2
	86	30.0	6.6	4.9	6.8	5.1	7.2	5.0	7.4	5.1	7.6	5.3	8.0	5.2	8.5	5.1
	91	32.5	6.5	4.9	6.7	5.0	7.0	4.9	7.2	5.0	7.4	5.2	7.8	5.1	8.3	5.0
	95	35.0	6.4	4.8	6.5	5.0	6.9	4.9	7.1	5.0	7.3	5.1	7.7	5.1	8.1	5.0
	100	37.5	6.2	4.8	6.4	4.9	6.8	4.8	6.9	4.9	7.1	5.1	7.5	5.0	8.0	4.9
	104	40.0	6.1	4.7	6.3	4.8	6.7	4.8	6.8	4.8	7.0	5.0	7.3	4.9	7.8	4.9
	110	43.0	6.0	4.6	6.1	4.8	6.5	4.7	6.6	4.8	6.8	4.9	7.2	4.9	7.6	4.8
71 (8.0)	68	20.0	7.6	5.6	7.9	5.8	8.4	5.7	8.6	5.8	8.9	6.0	9.4	5.9	10.1	5.9
	73	22.5	7.6	5.6	7.9	5.8	8.4	5.7	8.6	5.8	8.9	6.0	9.4	5.9	10.1	5.9
	77	25.0	7.6	5.6	7.9	5.8	8.4	5.7	8.6	5.8	8.8	6.0	9.4	5.9	9.9	5.8
	82	27.5	7.6	5.6	7.8	5.7	8.2	5.7	8.5	5.7	8.7	5.9	9.2	5.8	9.8	5.8
	86	30.0	7.4	5.5	7.6	5.7	8.1	5.6	8.3	5.7	8.5	5.9	9.0	5.8	9.6	5.7
	91	32.5	7.3	5.4	7.5	5.6	7.9	5.5	8.1	5.6	8.4	5.8	8.8	5.7	9.4	5.6
	95	35.0	7.2	5.4	7.4	5.5	7.8	5.5	8.0	5.5	8.2	5.7	8.6	5.6	9.2	5.5
	100	37.5	7.0	5.3	7.2	5.5	7.6	5.4	7.8	5.5	8.0	5.7	8.5	5.6	9.0	5.5
	104	40.0	6.9	5.2	7.1	5.4	7.5	5.3	7.7	5.4	7.9	5.6	8.3	5.5	8.8	5.4
	110	43.0	6.7	5.2	6.9	5.3	7.3	5.3	7.4	5.3	7.7	5.5	8.1	5.4	8.6	5.3
80 (9.0)	68	20.0	8.6	6.3	8.9	6.5	9.5	6.5	9.7	6.6	10.0	6.8	10.6	6.7	11.4	6.7
	73	22.5	8.6	6.3	8.9	6.5	9.5	6.5	9.7	6.6	10.0	6.8	10.6	6.7	11.4	6.7
	77	25.0	8.6	6.3	8.9	6.5	9.5	6.5	9.7	6.6	9.9	6.8	10.5	6.7	11.2	6.6
	82	27.5	8.5	6.3	8.8	6.5	9.3	6.4	9.5	6.5	9.8	6.7	10.3	6.6	11.0	6.5
	86	30.0	8.4	6.2	8.6	6.4	9.1	6.3	9.4	6.4	9.6	6.6	10.1	6.5	10.8	6.4
	91	32.5	8.2	6.2	8.5	6.3	8.9	6.3	9.1	6.3	9.4	6.6	9.9	6.4	10.5	6.4
	95	35.0	8.1	6.1	8.3	6.3	8.8	6.2	9.0	6.3	9.2	6.5	9.7	6.4	10.3	6.3
	100	37.5	7.9	6.0	8.1	6.2	8.6	6.1	8.8	6.2	9.0	6.4	9.5	6.3	10.1	6.2
	104	40.0	7.7	5.9	8.0	6.1	8.5	6.1	8.6	6.1	8.9	6.4	9.3	6.2	9.9	6.1
	110	43.0	7.6	5.8	7.8	6.0	8.2	6.0	8.4	6.0	8.6	6.2	9.1	6.1	9.6	6.0
100 (11.2)	68	20.0	10.6	8.5	11.0	8.8	11.8	8.8	12.1	8.9	12.5	9.3	13.2	9.2	14.2	9.1
	73	22.5	10.6	8.5	11.0	8.8	11.8	8.8	12.1	8.9	12.5	9.3	13.2	9.2	14.2	9.1
	77	25.0	10.6	8.5	11.0	8.8	11.8	8.8	12.1	8.9	12.4	9.2	13.1	9.1	13.9	9.0
	82	27.5	10.6	8.5	10.9	8.8	11.5	8.7	11.9	8.8	12.2	9.2	12.8	9.0	13.7	8.9
	86	30.0	10.4	8.4	10.7	8.7	11.3	8.6	11.6	8.7	11.9	9.1	12.5	8.9	13.4	8.8
	91	32.5	10.2	8.3	10.5	8.6	11.1	8.5	11.4	8.6	11.7	9.0	12.3	8.8	13.1	8.7
	95	35.0	10.0	8.2	10.3	8.5	10.9	8.4	11.2	8.6	11.5	8.9	12.1	8.8	12.8	8.6
	100	37.5	9.8	8.1	10.1	8.4	10.7	8.3	10.9	8.5	11.3	8.8	11.9	8.7	12.5	8.5
	104	40.0	9.6	8.1	9.9	8.3	10.5	8.2	10.8	8.4	11.1	8.7	11.6	8.6	12.3	8.5
	110	43.0	9.4	7.9	9.7	8.2	10.2	8.1	10.4	8.3	10.8	8.6	11.3	8.5	12.0	8.3
125 (14.0)	68	20.0	13.3	9.8	13.8	10.1	14.7	10.1	15.1	10.2	15.6	10.6	16.5	10.4	17.7	10.3
	73	22.5	13.3	9.8	13.8	10.1	14.7	10.1	15.1	10.2	15.6	10.6	16.5	10.4	17.7	10.3
	77	25.0	13.3	9.8	13.8	10.1	14.7	10.1	15.1	10.2	15.5	10.5	16.4	10.4	17.4	10.2
	82	27.5	13.2	9.8	13.7	10.1	14.4	9.9	14.8	10.1	15.3	10.4	16.0	10.2	17.1	10.1
	86	30.0	13.0	9.7	13.4	9.9	14.2	9.8	14.6	10.0	14.9	10.3	15.7	10.1	16.7	10.0
	91	32.5	12.7	9.5	13.2	9.8	13.9	9.7	14.2	9.8	14.6	10.2	15.4	10.0	16.4	9.9
	95	35.0	12.5	9.4	12.9	9.7	13.7	9.6	14.0	9.7	14.4	10.1	15.1	9.9	16.0	9.7
	100	37.5	12.3	9.3	12.6	9.6	13.4	9.5	13.7	9.6	14.1	9.9	14.8	9.8	15.7	9.6
	104	40.0	12.0	9.2	12.4	9.5	13.2	9.4	13.4	9.5	13.9	9.9	14.5	9.6	15.4	9.5
	110	43.0	11.8	9.1	12.1	9.3	12.8	9.2	13.0	9.3	13.4	9.7	14.1	9.5	15.0	9.4

kcal/h = kW x 860, Btu/h = kW x 3,412

A1. Cooling capacity with PUHY-P200, 250YHM/PUHY-EP200, 250YHM PURY-P200, 250YHM/PURY-EP200, 250YHM

PEFY-P-VMH-E

CA : Capacity(kW) SHC : Sensible Heat Capacity(kW)

Model size (Rated kW)	Outdoor air temp.		Indoor air temp.													
			71 ˚FDB / 59˚FWB		73˚FDB / 61˚FWB		77˚FDB / 64˚FWB		81˚FDB / 66˚FWB		82˚FDB / 68˚FWB		86˚FDB / 72˚FWB		90˚FDB / 75˚FWB	
			21.5˚CDB / 15˚CWB		23˚CDB / 16˚CWB		25˚CDB / 18˚CWB		27˚CDB / 19˚CWB		28˚CDB / 20˚CWB		30˚CDB / 22˚CWB		32˚CDB / 24˚CWB	
	˚FDB	˚CDB	CA	SHC	CA	SHC	CA	SHC	CA	SHC	CA	SHC	CA	SHC	CA	SHC
140 (16.0)	68	20.0	15.2	11.2	15.8	11.6	16.8	11.5	17.3	11.7	17.8	12.1	18.9	11.9	20.2	11.8
	73	22.5	15.2	11.2	15.8	11.6	16.8	11.5	17.3	11.7	17.8	12.1	18.9	11.9	20.2	11.8
	77	25.0	15.2	11.2	15.8	11.6	16.8	11.5	17.3	11.7	17.7	12.0	18.7	11.9	19.8	11.7
	82	27.5	15.1	11.2	15.6	11.5	16.5	11.4	17.0	11.5	17.4	11.9	18.3	11.7	19.5	11.6
	86	30.0	14.9	11.1	15.3	11.4	16.2	11.2	16.6	11.4	17.0	11.8	17.9	11.6	19.1	11.4
	91	32.5	14.6	10.9	15.0	11.2	15.8	11.1	16.2	11.2	16.7	11.6	17.6	11.4	18.7	11.3
	95	35.0	14.3	10.8	14.7	11.1	15.6	11.0	16.0	11.1	16.4	11.5	17.3	11.3	18.3	11.1
	100	37.5	14.0	10.7	14.4	10.9	15.3	10.8	15.6	10.9	16.1	11.4	17.0	11.2	17.9	11.0
	104	40.0	13.8	10.5	14.2	10.8	15.0	10.7	15.4	10.8	15.8	11.3	16.6	11.0	17.6	10.9
	110	43.0	13.4	10.4	13.8	10.7	14.6	10.6	14.9	10.6	15.4	11.1	16.2	10.9	17.1	10.7
200 (22.4)	68	20.0	21.3	16.1	22.1	16.6	23.5	16.5	24.2	16.7	25.0	17.4	26.4	17.1	28.3	17.0
	73	22.5	21.3	16.1	22.1	16.6	23.5	16.5	24.2	16.7	25.0	17.4	26.4	17.1	28.3	17.0
	77	25.0	21.3	16.1	22.1	16.6	23.5	16.5	24.2	16.7	24.8	17.3	26.2	17.1	27.8	16.8
	82	27.5	21.2	16.0	21.8	16.5	23.1	16.3	23.7	16.6	24.4	17.2	25.6	16.8	27.3	16.6
	86	30.0	20.8	15.9	21.4	16.3	22.7	16.1	23.3	16.4	23.9	16.9	25.1	16.6	26.8	16.4
	91	32.5	20.4	15.7	21.1	16.2	22.2	15.9	22.7	16.1	23.4	16.8	24.6	16.5	26.2	16.2
	95	35.0	20.0	15.5	20.6	15.9	21.8	15.8	22.4	16.0	23.0	16.6	24.2	16.3	25.6	16.1
	100	37.5	19.6	15.3	20.2	15.7	21.4	15.6	21.8	15.8	22.5	16.4	23.7	16.1	25.1	15.9
	104	40.0	19.3	15.1	19.8	15.6	21.1	15.4	21.5	15.6	22.2	16.3	23.2	15.9	24.6	15.7
	110	43.0	18.8	14.9	19.4	15.4	20.5	15.2	20.8	15.4	21.5	16.0	22.6	15.7	24.0	15.5
250 (28.0)	68	20.0	26.6	20.0	27.6	20.7	29.4	20.5	30.2	20.8	31.2	21.6	33.0	21.3	35.4	21.1
	73	22.5	26.6	20.0	27.6	20.7	29.4	20.5	30.2	20.8	31.2	21.6	33.0	21.3	35.4	21.1
	77	25.0	26.6	20.0	27.6	20.7	29.4	20.5	30.2	20.8	30.9	21.5	32.8	21.2	34.7	20.9
	82	27.5	26.5	19.9	27.3	20.5	28.8	20.3	29.7	20.6	30.5	21.3	32.1	20.9	34.2	20.7
	86	30.0	26.0	19.7	26.7	20.3	28.3	20.1	29.1	20.3	29.8	21.0	31.4	20.7	33.5	20.4
	91	32.5	25.5	19.5	26.3	20.1	27.7	19.8	28.4	20.0	29.3	20.8	30.8	20.4	32.8	20.2
	95	35.0	25.1	19.3	25.8	19.8	27.3	19.6	28.0	19.9	28.7	20.6	30.2	20.2	32.1	19.9
	100	37.5	24.6	19.0	25.2	19.5	26.7	19.4	27.3	19.6	28.1	20.4	29.7	20.0	31.4	19.7
	104	40.0	24.1	18.8	24.8	19.4	26.3	19.2	26.9	19.4	27.7	20.2	29.0	19.8	30.8	19.5
	110	43.0	23.5	18.5	24.2	19.1	25.6	18.9	26.0	19.1	26.9	19.8	28.3	19.5	30.0	19.2

kcal/h = kW x 860, Btu/h = kW x 3,412

CT

A1. Cooling capacity with PUHY-P200, 250YHM/PUHY-EP200, 250YHM PURY-P200, 250YHM/PURY-EP200, 250YHM

PEFY-P-VMR-E-L/R

CA : Capacity(kW) SHC : Sensible Heat Capacity(kW)

Model size (Rated kW)	Outdoor air temp.		Indoor air temp.													
			71 ˚FDB / 59˚FWB		73˚FDB / 61˚FWB		77˚FDB / 64˚FWB		81˚FDB / 66˚FWB		82˚FDB / 68˚FWB		86˚FDB / 72˚FWB		90˚FDB / 75˚FWB	
			21.5˚CDB / 15˚CWB		23˚CDB / 16˚CWB		25˚CDB / 18˚CWB		27˚CDB / 19˚CWB		28˚CDB / 20˚CWB		30˚CDB / 22˚CWB		32˚CDB / 24˚CWB	
	˚FDB	˚CDB	CA	SHC	CA	SHC	CA	SHC	CA	SHC	CA	SHC	CA	SHC	CA	SHC
20 (2.2)	68	20.0	2.0	1.7	2.1	1.7	2.3	1.7	2.4	1.9	2.4	1.9	2.6	1.8	2.8	1.8
	73	22.5	2.0	1.7	2.1	1.7	2.3	1.7	2.4	1.9	2.4	1.9	2.6	1.8	2.8	1.8
	77	25.0	2.0	1.7	2.1	1.7	2.3	1.7	2.4	1.9	2.4	1.9	2.6	1.8	2.7	1.8
	82	27.5	2.0	1.7	2.1	1.7	2.2	1.7	2.3	1.9	2.4	1.8	2.5	1.8	2.7	1.8
	86	30.0	1.9	1.6	2.0	1.7	2.2	1.7	2.3	1.8	2.3	1.8	2.5	1.8	2.6	1.8
	91	32.5	1.9	1.6	2.0	1.7	2.1	1.7	2.2	1.8	2.3	1.8	2.4	1.8	2.6	1.8
	95	35.0	1.9	1.6	2.0	1.7	2.1	1.7	2.2	1.8	2.2	1.8	2.4	1.8	2.5	1.7
	100	37.5	1.8	1.6	1.9	1.7	2.0	1.7	2.1	1.8	2.2	1.8	2.3	1.8	2.5	1.7
	104	40.0	1.8	1.6	1.9	1.7	2.0	1.6	2.1	1.8	2.1	1.8	2.3	1.7	2.4	1.7
	110	43.0	1.8	1.6	1.8	1.6	2.0	1.6	2.0	1.7	2.0	1.7	2.2	1.7	2.4	1.7
25 (2.8)	68	20.0	2.5	1.9	2.7	2.0	2.9	2.0	3.0	2.2	3.1	2.1	3.3	2.1	3.5	2.1
	73	22.5	2.5	1.9	2.7	2.0	2.9	2.0	3.0	2.2	3.1	2.1	3.3	2.1	3.5	2.1
	77	25.0	2.5	1.9	2.7	2.0	2.9	2.0	3.0	2.2	3.1	2.1	3.3	2.1	3.5	2.1
	82	27.5	2.5	1.9	2.6	2.0	2.8	2.0	3.0	2.1	3.0	2.1	3.2	2.1	3.4	2.1
	86	30.0	2.5	1.9	2.6	2.0	2.8	2.0	2.9	2.1	3.0	2.1	3.1	2.0	3.3	2.0
	91	32.5	2.4	1.9	2.5	2.0	2.7	1.9	2.8	2.1	2.9	2.1	3.1	2.0	3.3	2.0
	95	35.0	2.4	1.9	2.5	1.9	2.7	1.9	2.8	2.1	2.8	2.0	3.0	2.0	3.2	2.0
	100	37.5	2.4	1.8	2.5	1.9	2.6	1.9	2.7	2.0	2.8	2.0	3.0	2.0	3.1	2.0
	104	40.0	2.3	1.8	2.4	1.9	2.6	1.9	2.7	2.0	2.7	2.0	2.9	2.0	3.1	1.9
	110	43.0	2.3	1.8	2.4	1.9	2.5	1.8	2.6	2.0	2.6	1.9	2.8	1.9	3.0	1.9
32 (3.6)	68	20.0	3.2	2.3	3.4	2.5	3.7	2.5	3.9	2.6	4.0	2.6	4.2	2.6	4.6	2.6
	73	22.5	3.2	2.3	3.4	2.5	3.7	2.5	3.9	2.6	4.0	2.6	4.2	2.6	4.6	2.6
	77	25.0	3.2	2.3	3.4	2.5	3.7	2.5	3.9	2.6	4.0	2.6	4.2	2.6	4.5	2.5
	82	27.5	3.2	2.3	3.4	2.4	3.6	2.4	3.8	2.6	3.9	2.5	4.1	2.5	4.4	2.5
	86	30.0	3.2	2.3	3.3	2.4	3.6	2.4	3.7	2.6	3.8	2.5	4.0	2.5	4.3	2.5
	91	32.5	3.1	2.3	3.3	2.4	3.5	2.4	3.7	2.5	3.7	2.5	4.0	2.5	4.2	2.4
	95	35.0	3.1	2.3	3.2	2.4	3.4	2.3	3.6	2.5	3.7	2.5	3.9	2.4	4.1	2.4
	100	37.5	3.0	2.2	3.2	2.3	3.3	2.3	3.5	2.5	3.6	2.4	3.8	2.4	4.0	2.4
	104	40.0	3.0	2.2	3.1	2.3	3.3	2.3	3.5	2.4	3.5	2.4	3.7	2.4	4.0	2.3
	110	43.0	2.9	2.2	3.0	2.3	3.2	2.2	3.3	2.4	3.3	2.3	3.6	2.3	3.9	2.3

kcal/h = kW x 860, Btu/h = kW x 3,412

A1. Cooling capacity with PUHY-P200, 250YHM/PUHY-EP200, 250YHM PURY-P200, 250YHM/PURY-EP200, 250YHM

PEFY-P-VMS1(L)-E

CA : Capacity(kW) SHC : Sensible Heat Capacity(kW)

Model size (Rated kW)	Outdoor air temp.		Indoor air temp.													
			71 ˚FDB / 59˚FWB		73˚FDB / 61˚FWB		77˚FDB / 64˚FWB		81˚FDB / 66˚FWB		82˚FDB / 68˚FWB		86˚FDB / 72˚FWB		90˚FDB / 75˚FWB	
			21.5˚CDB / 15˚CWB		23˚CDB / 16˚CWB		25˚CDB / 18˚CWB		27˚CDB / 19˚CWB		28˚CDB / 20˚CWB		30˚CDB / 22˚CWB		32˚CDB / 24˚CWB	
	˚FDB	˚CDB	CA	SHC	CA	SHC	CA	SHC	CA	SHC	CA	SHC	CA	SHC	CA	SHC
15 (1.7)	68	20.0	1.5	1.4	1.6	1.5	1.8	1.5	1.8	1.6	1.9	1.6	2.0	1.6	2.2	1.6
	73	22.5	1.5	1.4	1.6	1.5	1.8	1.5	1.8	1.6	1.9	1.6	2.0	1.6	2.2	1.6
	77	25.0	1.5	1.4	1.6	1.5	1.8	1.5	1.8	1.6	1.9	1.6	2.0	1.6	2.1	1.6
	82	27.5	1.5	1.4	1.6	1.5	1.7	1.5	1.8	1.6	1.8	1.6	1.9	1.6	2.1	1.6
	86	30.0	1.5	1.4	1.6	1.5	1.7	1.5	1.8	1.6	1.8	1.6	1.9	1.6	2.0	1.6
	91	32.5	1.5	1.4	1.5	1.5	1.6	1.5	1.7	1.6	1.8	1.6	1.9	1.6	2.0	1.5
	95	35.0	1.4	1.4	1.5	1.5	1.6	1.5	1.7	1.6	1.7	1.6	1.8	1.5	1.9	1.5
	100	37.5	1.4	1.4	1.5	1.5	1.6	1.4	1.7	1.6	1.7	1.5	1.8	1.5	1.9	1.5
	104	40.0	1.4	1.4	1.5	1.4	1.6	1.4	1.6	1.6	1.7	1.5	1.8	1.5	1.9	1.5
	110	43.0	1.4	1.4	1.4	1.4	1.5	1.4	1.6	1.5	1.6	1.5	1.7	1.5	1.8	1.5
20 (2.2)	68	20.0	2.0	1.7	2.1	1.8	2.3	1.8	2.4	2.0	2.4	1.9	2.6	1.9	2.8	1.9
	73	22.5	2.0	1.7	2.1	1.8	2.3	1.8	2.4	2.0	2.4	1.9	2.6	1.9	2.8	1.9
	77	25.0	2.0	1.7	2.1	1.8	2.3	1.8	2.4	2.0	2.4	1.9	2.6	1.9	2.7	1.9
	82	27.5	2.0	1.7	2.1	1.8	2.2	1.8	2.3	1.9	2.4	1.9	2.5	1.9	2.7	1.9
	86	30.0	1.9	1.7	2.0	1.8	2.2	1.8	2.3	1.9	2.3	1.9	2.5	1.9	2.6	1.9
	91	32.5	1.9	1.7	2.0	1.8	2.1	1.8	2.2	1.9	2.3	1.9	2.4	1.9	2.6	1.8
	95	35.0	1.9	1.7	2.0	1.8	2.1	1.7	2.2	1.9	2.2	1.9	2.4	1.9	2.5	1.8
	100	37.5	1.8	1.7	1.9	1.7	2.0	1.7	2.1	1.9	2.2	1.9	2.3	1.8	2.5	1.8
	104	40.0	1.8	1.7	1.9	1.7	2.0	1.7	2.1	1.9	2.1	1.8	2.3	1.8	2.4	1.8
	110	43.0	1.8	1.6	1.8	1.7	2.0	1.7	2.0	1.8	2.0	1.8	2.2	1.8	2.4	1.8
25 (2.8)	68	20.0	2.5	2.1	2.7	2.2	2.9	2.2	3.0	2.3	3.1	2.3	3.3	2.3	3.5	2.3
	73	22.5	2.5	2.1	2.7	2.2	2.9	2.2	3.0	2.3	3.1	2.3	3.3	2.3	3.5	2.3
	77	25.0	2.5	2.1	2.7	2.2	2.9	2.2	3.0	2.3	3.1	2.3	3.3	2.3	3.5	2.3
	82	27.5	2.5	2.1	2.6	2.2	2.8	2.2	3.0	2.3	3.0	2.3	3.2	2.3	3.4	2.2
	86	30.0	2.5	2.0	2.6	2.1	2.8	2.1	2.9	2.3	3.0	2.3	3.1	2.2	3.3	2.2
	91	32.5	2.4	2.0	2.5	2.1	2.7	2.1	2.8	2.3	2.9	2.2	3.1	2.2	3.3	2.2
	95	35.0	2.4	2.0	2.5	2.1	2.7	2.1	2.8	2.2	2.8	2.2	3.0	2.2	3.2	2.2
	100	37.5	2.4	2.0	2.5	2.1	2.6	2.1	2.7	2.2	2.8	2.2	3.0	2.2	3.1	2.1
	104	40.0	2.3	2.0	2.4	2.1	2.6	2.0	2.7	2.2	2.7	2.2	2.9	2.2	3.1	2.1
	110	43.0	2.3	2.0	2.4	2.0	2.5	2.0	2.6	2.2	2.6	2.1	2.8	2.1	3.0	2.1
32 (3.6)	68	20.0	3.2	2.5	3.4	2.6	3.7	2.6	3.9	2.8	4.0	2.8	4.2	2.8	4.6	2.7
	73	22.5	3.2	2.5	3.4	2.6	3.7	2.6	3.9	2.8	4.0	2.8	4.2	2.8	4.6	2.7
	77	25.0	3.2	2.5	3.4	2.6	3.7	2.6	3.9	2.8	4.0	2.8	4.2	2.7	4.5	2.7
	82	27.5	3.2	2.5	3.4	2.6	3.6	2.6	3.8	2.8	3.9	2.7	4.1	2.7	4.4	2.7
	86	30.0	3.2	2.5	3.3	2.6	3.6	2.6	3.7	2.7	3.8	2.7	4.0	2.7	4.3	2.6
	91	32.5	3.1	2.4	3.3	2.5	3.5	2.5	3.7	2.7	3.7	2.7	4.0	2.6	4.2	2.6
	95	35.0	3.1	2.4	3.2	2.5	3.4	2.5	3.6	2.7	3.7	2.6	3.9	2.6	4.1	2.6
	100	37.5	3.0	2.4	3.2	2.5	3.3	2.5	3.5	2.6	3.6	2.6	3.8	2.6	4.0	2.5
	104	40.0	3.0	2.4	3.1	2.5	3.3	2.4	3.5	2.6	3.5	2.6	3.7	2.6	4.0	2.5
	110	43.0	2.9	2.3	3.0	2.4	3.2	2.4	3.3	2.6	3.3	2.5	3.6	2.5	3.9	2.5
40 (4.5)	68	20.0	4.0	3.0	4.3	3.2	4.6	3.2	4.9	3.4	5.0	3.4	5.3	3.3	5.7	3.3
	73	22.5	4.0	3.0	4.3	3.2	4.6	3.2	4.9	3.4	5.0	3.4	5.3	3.3	5.7	3.3
	77	25.0	4.0	3.0	4.3	3.2	4.6	3.2	4.9	3.4	5.0	3.4	5.3	3.3	5.6	3.3
	82	27.5	4.0	3.0	4.3	3.2	4.5	3.1	4.8	3.4	4.8	3.3	5.2	3.3	5.5	3.2
	86	30.0	4.0	3.0	4.2	3.1	4.5	3.1	4.7	3.3	4.8	3.3	5.0	3.2	5.4	3.2
	91	32.5	3.9	2.9	4.1	3.1	4.4	3.1	4.6	3.3	4.7	3.2	5.0	3.2	5.3	3.2
	95	35.0	3.8	2.9	4.0	3.1	4.3	3.0	4.5	3.2	4.6	3.2	4.9	3.2	5.2	3.1
	100	37.5	3.8	2.9	4.0	3.0	4.2	3.0	4.4	3.2	4.5	3.2	4.8	3.1	5.0	3.1
	104	40.0	3.7	2.9	3.9	3.0	4.1	3.0	4.3	3.2	4.4	3.1	4.7	3.1	5.0	3.0
	110	43.0	3.6	2.8	3.8	2.9	4.0	2.9	4.2	3.1	4.2	3.0	4.5	3.0	4.8	3.0
50 (5.6)	68	20.0	5.0	3.7	5.3	3.9	5.8	3.9	6.0	4.2	6.2	4.1	6.6	4.1	7.1	4.0
	73	22.5	5.0	3.7	5.3	3.9	5.8	3.9	6.0	4.2	6.2	4.1	6.6	4.1	7.1	4.0
	77	25.0	5.0	3.7	5.3	3.9	5.8	3.9	6.0	4.2	6.2	4.1	6.6	4.1	6.9	4.0
	82	27.5	5.0	3.7	5.3	3.9	5.7	3.8	5.9	4.1	6.0	4.0	6.4	4.0	6.8	4.0
	86	30.0	4.9	3.7	5.2	3.8	5.5	3.8	5.8	4.1	5.9	4.0	6.3	3.9	6.7	3.9
	91	32.5	4.8	3.6	5.1	3.8	5.4	3.7	5.7	4.0	5.8	4.0	6.2	3.9	6.6	3.9
	95	35.0	4.8	3.6	5.0	3.7	5.3	3.7	5.6	4.0	5.7	3.9	6.0	3.9	6.4	3.8
	100	37.5	4.7	3.5	4.9	3.7	5.2	3.6	5.5	3.9	5.5	3.8	5.9	3.8	6.3	3.7
	104	40.0	4.6	3.5	4.8	3.6	5.1	3.6	5.4	3.9	5.5	3.8	5.8	3.8	6.2	3.7
	110	43.0	4.5	3.5	4.7	3.6	5.0	3.5	5.2	3.8	5.2	3.7	5.7	3.7	6.0	3.7
63 (7.1)	68	20.0	6.4	4.7	6.8	4.9	7.3	4.9	7.7	5.3	7.8	5.2	8.4	5.2	9.0	5.1
	73	22.5	6.4	4.7	6.8	4.9	7.3	4.9	7.7	5.3	7.8	5.2	8.4	5.2	9.0	5.1
	77	25.0	6.4	4.7	6.8	4.9	7.3	4.9	7.7	5.3	7.8	5.2	8.3	5.1	8.8	5.0
	82	27.5	6.3	4.7	6.7	4.9	7.2	4.9	7.5	5.2	7.6	5.1	8.1	5.1	8.7	5.0
	86	30.0	6.2	4.6	6.6	4.8	7.0	4.8	7.4	5.1	7.5	5.1	8.0	5.0	8.5	4.9
	91	32.5	6.1	4.6	6.5	4.8	6.9	4.7	7.2	5.1	7.3	5.0	7.8	4.9	8.3	4.9
	95	35.0	6.0	4.5	6.4	4.7	6.7	4.7	7.1	5.0	7.2	4.9	7.7	4.9	8.1	4.8
	100	37.5	6.0	4.5	6.2	4.7	6.6	4.6	6.9	4.9	7.0	4.9	7.5	4.8	8.0	4.7
	104	40.0	5.9	4.4	6.1	4.6	6.5	4.6	6.8	4.9	6.9	4.8	7.3	4.7	7.8	4.7
	110	43.0	5.8	4.4	6.0	4.5	6.3	4.5	6.6	4.8	6.6	4.7	7.2	4.7	7.6	4.6

kcal/h = kW x 860, Btu/h = kW x 3,412

CT

A2. Cooling capacity with PUHY-P300-400YHM /PUHY-EP300, 400Y(S)HM PURY-P300-400YHM /PURY-EP300, 400Y(S)HM

PEFY-P-VMH-E

CA : Capacity(kW) SHC : Sensible Heat Capacity(kW)

Model size (Rated kW)	Outdoor air temp.		Indoor air temp.													
			71 ˚FDB / 59˚FWB		73˚FDB / 61˚FWB		77˚FDB / 64˚FWB		81˚FDB / 66˚FWB		82˚FDB / 68˚FWB		86˚FDB / 72˚FWB		90˚FDB / 75˚FWB	
			21.5˚CDB / 15˚CWB		23˚CDB / 16˚CWB		25˚CDB / 18˚CWB		27˚CDB / 19˚CWB		28˚CDB / 20˚CWB		30˚CDB / 22˚CWB		32˚CDB / 24˚CWB	
	˚FDB	˚CDB	CA	SHC	CA	SHC	CA	SHC	CA	SHC	CA	SHC	CA	SHC	CA	SHC
40 (4.5)	68	20.0	4.4	3.3	4.5	3.4	4.9	3.4	5.0	3.5	5.2	3.6	5.5	3.6	5.9	3.5
	73	22.5	4.3	3.3	4.5	3.4	4.8	3.4	5.0	3.4	5.1	3.6	5.4	3.5	5.7	3.5
	77	25.0	4.3	3.3	4.4	3.4	4.7	3.3	4.9	3.4	5.0	3.5	5.3	3.5	5.6	3.4
	82	27.5	4.2	3.2	4.3	3.3	4.6	3.3	4.8	3.4	4.9	3.5	5.2	3.4	5.5	3.4
	86	30.0	4.1	3.2	4.2	3.3	4.5	3.3	4.7	3.3	4.8	3.4	5.1	3.4	5.4	3.3
	91	32.5	4.1	3.2	4.2	3.2	4.4	3.2	4.6	3.3	4.7	3.4	5.0	3.4	5.3	3.3
	95	35.0	4.0	3.1	4.1	3.2	4.3	3.2	4.5	3.2	4.6	3.4	4.9	3.3	5.2	3.3
	100	37.5	4.0	3.1	4.0	3.2	4.3	3.1	4.4	3.2	4.5	3.3	4.8	3.3	5.1	3.2
	104	40.0	3.9	3.1	3.9	3.1	4.2	3.1	4.3	3.2	4.9	3.5	4.7	3.2	5.0	3.2
	110	43.0	3.8	3.0	3.8	3.1	4.1	3.0	4.2	3.1	4.3	3.2	4.6	3.2	4.8	3.1
50 (5.6)	68	20.0	5.4	3.9	5.6	4.0	6.0	4.0	6.3	4.0	6.5	4.2	6.9	4.1	7.3	4.1
	73	22.5	5.4	3.9	5.6	4.0	6.0	3.9	6.2	4.0	6.4	4.1	6.7	4.1	7.1	4.0
	77	25.0	5.3	3.8	5.5	3.9	5.9	3.9	6.0	3.9	6.2	4.1	6.6	4.0	7.0	4.0
	82	27.5	5.2	3.8	5.4	3.9	5.7	3.8	5.9	3.9	6.1	4.0	6.5	4.0	6.9	3.9
	86	30.0	5.2	3.7	5.3	3.8	5.6	3.8	5.8	3.8	6.0	4.0	6.4	3.9	6.7	3.9
	91	32.5	5.1	3.7	5.2	3.8	5.5	3.7	5.7	3.8	5.9	3.9	6.2	3.9	6.6	3.8
	95	35.0	5.0	3.6	5.1	3.7	5.4	3.7	5.6	3.7	5.8	3.9	6.1	3.8	6.5	3.8
	100	37.5	4.9	3.6	5.0	3.7	5.3	3.6	5.5	3.7	5.7	3.8	6.0	3.8	6.3	3.7
	104	40.0	4.8	3.6	4.8	3.6	5.2	3.6	5.3	3.6	6.1	4.0	5.9	3.7	6.2	3.7
	110	43.0	4.7	3.5	4.7	3.5	5.0	3.5	5.2	3.6	5.3	3.7	5.7	3.7	6.0	3.6
63 (7.1)	68	20.0	6.9	5.1	7.1	5.2	7.7	5.2	8.0	5.3	8.2	5.5	8.7	5.5	9.2	5.4
	73	22.5	6.9	5.1	7.1	5.2	7.6	5.2	7.8	5.3	8.1	5.5	8.5	5.4	9.1	5.3
	77	25.0	6.8	5.0	7.0	5.2	7.4	5.1	7.7	5.2	7.9	5.4	8.4	5.3	8.9	5.2
	82	27.5	6.6	5.0	6.8	5.1	7.3	5.1	7.5	5.1	7.8	5.3	8.2	5.3	8.7	5.2
	86	30.0	6.5	4.9	6.7	5.0	7.1	5.0	7.4	5.1	7.6	5.3	8.1	5.2	8.5	5.1
	91	32.5	6.4	4.9	6.6	5.0	7.0	4.9	7.2	5.0	7.5	5.2	7.9	5.1	8.4	5.1
	95	35.0	6.3	4.8	6.4	4.9	6.8	4.9	7.1	5.0	7.3	5.2	7.7	5.1	8.2	5.0
	100	37.5	6.2	4.8	6.3	4.8	6.7	4.8	6.9	4.9	7.2	5.1	7.6	5.0	8.0	4.9
	104	40.0	6.1	4.7	6.1	4.8	6.6	4.7	6.8	4.8	7.7	5.3	7.4	5.0	7.8	4.9
	110	43.0	6.0	4.6	6.0	4.7	6.4	4.7	6.6	4.8	6.8	4.9	7.2	4.9	7.6	4.8
71 (8.0)	68	20.0	7.8	5.7	8.0	5.9	8.6	5.9	9.0	5.9	9.2	6.2	9.8	6.1	10.4	6.0
	73	22.5	7.7	5.7	8.0	5.8	8.5	5.8	8.8	5.9	9.1	6.1	9.6	6.0	10.2	5.9
	77	25.0	7.6	5.6	7.8	5.8	8.4	5.7	8.6	5.8	8.9	6.0	9.4	5.9	10.0	5.9
	82	27.5	7.5	5.5	7.7	5.7	8.2	5.7	8.5	5.7	8.7	6.0	9.3	5.9	9.8	5.8
	86	30.0	7.4	5.5	7.5	5.6	8.0	5.6	8.3	5.7	8.6	5.9	9.1	5.8	9.6	5.7
	91	32.5	7.2	5.4	7.4	5.5	7.9	5.5	8.2	5.6	8.4	5.8	8.9	5.7	9.4	5.6
	95	35.0	7.1	5.4	7.2	5.5	7.7	5.4	8.0	5.5	8.2	5.7	8.7	5.7	9.2	5.6
	100	37.5	7.0	5.3	7.1	5.4	7.6	5.4	7.8	5.5	8.1	5.7	8.6	5.6	9.1	5.5
	104	40.0	6.9	5.3	6.9	5.3	7.4	5.3	7.6	5.4	8.7	5.9	8.4	5.5	8.8	5.4
	110	43.0	6.7	5.2	6.7	5.2	7.2	5.2	7.4	5.3	7.6	5.5	8.1	5.4	8.6	5.4
80 (9.0)	68	20.0	8.7	6.4	9.0	6.6	9.7	6.6	10.1	6.7	10.4	7.0	11.0	6.9	11.7	6.8
	73	22.5	8.7	6.4	9.0	6.6	9.6	6.6	9.9	6.7	10.2	6.9	10.8	6.8	11.5	6.7
	77	25.0	8.6	6.4	8.8	6.5	9.4	6.5	9.7	6.6	10.0	6.8	10.6	6.7	11.3	6.6
	82	27.5	8.4	6.3	8.6	6.4	9.2	6.4	9.5	6.5	9.8	6.7	10.4	6.7	11.0	6.5
	86	30.0	8.3	6.2	8.5	6.3	9.0	6.3	9.4	6.4	9.6	6.7	10.3	6.6	10.8	6.5
	91	32.5	8.1	6.1	8.3	6.3	8.9	6.2	9.2	6.3	9.5	6.6	10.0	6.5	10.6	6.4
	95	35.0	8.0	6.1	8.1	6.2	8.6	6.1	9.0	6.3	9.3	6.5	9.8	6.4	10.4	6.3
	100	37.5	7.9	6.0	8.0	6.1	8.5	6.1	8.8	6.2	9.1	6.4	9.6	6.3	10.2	6.2
	104	40.0	7.8	6.0	7.8	6.0	8.3	6.0	8.6	6.1	9.8	6.7	9.4	6.3	9.9	6.2
	110	43.0	7.6	5.8	7.6	5.9	8.1	5.9	8.4	6.0	8.6	6.2	9.1	6.2	9.7	6.1
100 (11.2)	68	20.0	10.9	8.6	11.3	8.9	12.1	8.9	12.5	9.1	12.9	9.5	13.7	9.3	14.6	9.2
	73	22.5	10.8	8.6	11.2	8.9	11.9	8.8	12.3	9.0	12.7	9.4	13.5	9.3	14.3	9.1
	77	25.0	10.7	8.5	11.0	8.8	11.7	8.7	12.1	8.9	12.5	9.3	13.2	9.2	14.0	9.0
	82	27.5	10.5	8.4	10.8	8.7	11.5	8.6	11.9	8.8	12.2	9.2	13.0	9.1	13.7	8.9
	86	30.0	10.3	8.4	10.5	8.6	11.3	8.6	11.6	8.7	12.0	9.1	12.8	9.0	13.4	8.8
	91	32.5	10.1	8.3	10.4	8.5	11.0	8.5	11.4	8.7	11.8	9.0	12.4	8.9	13.2	8.8
	95	35.0	10.0	8.2	10.1	8.4	10.8	8.3	11.2	8.6	11.5	8.9	12.2	8.8	12.9	8.7
	100	37.5	9.9	8.2	9.9	8.3	10.6	8.3	10.9	8.5	11.3	8.8	12.0	8.7	12.7	8.6
	104	40.0	9.7	8.1	9.7	8.2	10.4	8.2	10.7	8.4	12.2	9.2	11.7	8.6	12.4	8.5
	110	43.0	9.4	7.9	9.4	8.1	10.1	8.1	10.4	8.3	10.7	8.6	11.4	8.5	12.0	8.4
125 (14.0)	68	20.0	13.6	10.0	14.1	10.3	15.1	10.3	15.7	10.4	16.2	10.8	17.2	10.7	18.2	10.5
	73	22.5	13.5	9.9	14.0	10.2	14.9	10.2	15.4	10.3	15.9	10.7	16.8	10.6	17.9	10.4
	77	25.0	13.4	9.9	13.7	10.1	14.6	10.0	15.1	10.2	15.6	10.6	16.5	10.4	17.5	10.3
	82	27.5	13.1	9.7	13.4	10.0	14.4	9.9	14.8	10.1	15.3	10.5	16.2	10.3	17.2	10.1
	86	30.0	12.9	9.6	13.2	9.8	14.1	9.8	14.6	10.0	15.0	10.3	16.0	10.2	16.8	10.0
	91	32.5	12.7	9.5	13.0	9.7	13.8	9.7	14.3	9.8	14.7	10.2	15.5	10.1	16.5	9.9
	95	35.0	12.5	9.4	12.7	9.6	13.4	9.5	14.0	9.7	14.4	10.1	15.3	9.9	16.2	9.8
	100	37.5	12.3	9.3	12.4	9.5	13.2	9.4	13.7	9.6	14.1	10.0	15.0	9.8	15.8	9.7
	104	40.0	12.1	9.2	12.1	9.3	13.0	9.3	13.4	9.5	15.2	10.4	14.6	9.7	15.5	9.5
	110	43.0	11.8	9.1	11.8	9.2	12.6	9.1	13.0	9.3	13.4	9.7	14.2	9.5	15.1	9.4

kcal/h = kW x 860, Btu/h = kW x 3,412

A2. Cooling capacity with PUHY-P300-400YHM /PUHY-EP300, 400Y(S)HM PURY-P300-400YHM /PURY-EP300, 400Y(S)HM

PEFY-P-VMH-E

CA : Capacity(kW) SHC : Sensible Heat Capacity(kW)

Model size (Rated kW)	Outdoor air temp.		Indoor air temp.													
			71 ˚FDB / 59˚FWB		73˚FDB / 61˚FWB		77˚FDB / 64˚FWB		81˚FDB / 66˚FWB		82˚FDB / 68˚FWB		86˚FDB / 72˚FWB		90˚FDB / 75˚FWB	
			21.5˚CDB / 15˚CWB		23˚CDB / 16˚CWB		25˚CDB / 18˚CWB		27˚CDB / 19˚CWB		28˚CDB / 20˚CWB		30˚CDB / 22˚CWB		32˚CDB / 24˚CWB	
	˚FDB	˚CDB	CA	SHC	CA	SHC	CA	SHC	CA	SHC	CA	SHC	CA	SHC	CA	SHC
140 (16.0)	68	20.0	15.5	11.4	16.1	11.8	17.3	11.7	17.9	11.9	18.5	12.4	19.6	12.2	20.8	12.0
	73	22.5	15.4	11.4	16.0	11.7	17.0	11.6	17.6	11.8	18.2	12.2	19.2	12.1	20.4	11.9
	77	25.0	15.3	11.3	15.7	11.6	16.7	11.5	17.3	11.7	17.8	12.1	18.9	11.9	20.0	11.7
	82	27.5	15.0	11.1	15.4	11.4	16.4	11.3	17.0	11.5	17.5	12.0	18.5	11.8	19.6	11.6
	86	30.0	14.7	11.0	15.0	11.2	16.1	11.2	16.6	11.4	17.1	11.8	18.2	11.7	19.2	11.4
	91	32.5	14.5	10.9	14.8	11.1	15.8	11.0	16.3	11.2	16.8	11.7	17.8	11.5	18.8	11.3
	95	35.0	14.2	10.8	14.5	11.0	15.4	10.9	16.0	11.1	16.5	11.5	17.4	11.4	18.5	11.2
	100	37.5	14.1	10.7	14.2	10.8	15.1	10.8	15.6	10.9	16.2	11.4	17.1	11.2	18.1	11.1
	104	40.0	13.8	10.6	13.8	10.7	14.8	10.6	15.3	10.8	17.4	11.9	16.7	11.1	17.7	10.9
	110	43.0	13.4	10.4	13.4	10.5	14.4	10.4	14.9	10.6	15.3	11.0	16.2	10.9	17.2	10.7
200 (22.4)	68	20.0	21.7	16.3	22.5	16.8	24.2	16.8	25.1	17.1	25.9	17.8	27.4	17.5	29.1	17.3
	73	22.5	21.6	16.3	22.4	16.8	23.9	16.7	24.6	16.9	25.4	17.6	26.9	17.3	28.6	17.1
	77	25.0	21.4	16.1	22.0	16.6	23.4	16.5	24.2	16.7	24.9	17.4	26.4	17.1	28.0	16.9
	82	27.5	20.9	15.9	21.5	16.4	23.0	16.3	23.7	16.6	24.5	17.2	25.9	17.0	27.4	16.7
	86	30.0	20.6	15.8	21.1	16.2	22.5	16.1	23.3	16.4	24.0	17.0	25.5	16.8	26.9	16.5
	91	32.5	20.3	15.6	20.7	16.0	22.1	15.9	22.8	16.2	23.5	16.8	24.9	16.5	26.4	16.3
	95	35.0	19.9	15.4	20.3	15.8	21.5	15.6	22.4	16.0	23.1	16.6	24.4	16.4	25.9	16.1
	100	37.5	19.7	15.3	19.8	15.6	21.2	15.5	21.8	15.8	22.6	16.4	24.0	16.2	25.4	16.0
	104	40.0	19.4	15.2	19.4	15.4	20.7	15.3	21.4	15.6	24.3	17.1	23.4	16.0	24.8	15.7
	110	43.0	18.8	14.9	18.8	15.1	20.2	15.0	20.8	15.4	21.4	15.9	22.7	15.8	24.1	15.5
250 (28.0)	68	20.0	27.2	20.3	28.1	20.9	30.2	20.9	31.4	21.3	32.3	22.1	34.3	21.8	36.4	21.5
	73	22.5	27.0	20.2	28.0	20.9	29.8	20.7	30.8	21.0	31.8	21.9	33.7	21.5	35.7	21.2
	77	25.0	26.7	20.1	27.4	20.6	29.3	20.5	30.2	20.8	31.2	21.6	33.0	21.3	35.0	21.0
	82	27.5	26.2	19.8	26.9	20.3	28.7	20.2	29.7	20.6	30.6	21.4	32.4	21.1	34.3	20.7
	86	30.0	25.8	19.6	26.3	20.1	28.1	20.0	29.1	20.3	30.0	21.1	31.9	20.9	33.6	20.5
	91	32.5	25.3	19.4	25.9	19.9	27.6	19.7	28.6	20.1	29.4	20.9	31.1	20.6	33.0	20.3
	95	35.0	24.9	19.2	25.3	19.6	26.9	19.4	28.0	19.9	28.8	20.6	30.5	20.3	32.3	20.0
	100	37.5	24.6	19.1	24.8	19.4	26.5	19.2	27.3	19.6	28.3	20.4	30.0	20.1	31.7	19.8
	104	40.0	24.2	18.8	24.2	19.1	25.9	19.0	26.7	19.3	30.4	21.3	29.3	19.9	30.9	19.5
	110	43.0	23.5	18.5	23.5	18.8	25.2	18.7	26.0	19.1	26.7	19.8	28.4	19.6	30.1	19.3

kcal/h = kW x 860, Btu/h = kW x 3,412

CT

A2. Cooling capacity with PUHY-P300-400YHM /PUHY-EP300, 400Y(S)HM PURY-P300-400YHM /PURY-EP300, 400Y(S)HM

PEFY-P-VMR-E-L/R

CA : Capacity(kW) SHC : Sensible Heat Capacity(kW)

Model size (Rated kW)	Outdoor air temp.		Indoor air temp.													
			71 ˚FDB / 59˚FWB		73˚FDB / 61˚FWB		77˚FDB / 64˚FWB		81˚FDB / 66˚FWB		82˚FDB / 68˚FWB		86˚FDB / 72˚FWB		90˚FDB / 75˚FWB	
			21.5˚CDB / 15˚CWB		23˚CDB / 16˚CWB		25˚CDB / 18˚CWB		27˚CDB / 19˚CWB		28˚CDB / 20˚CWB		30˚CDB / 22˚CWB		32˚CDB / 24˚CWB	
	˚FDB	˚CDB	CA	SHC	CA	SHC	CA	SHC	CA	SHC	CA	SHC	CA	SHC	CA	SHC
20 (2.2)	68	20.0	2.1	1.7	2.2	1.8	2.4	1.8	2.5	1.9	2.5	1.9	2.7	1.9	2.9	1.9
	73	22.5	2.1	1.7	2.2	1.8	2.3	1.8	2.4	1.9	2.5	1.9	2.6	1.9	2.8	1.8
	77	25.0	2.1	1.7	2.2	1.8	2.3	1.8	2.4	1.9	2.4	1.9	2.6	1.8	2.8	1.8
	82	27.5	2.1	1.7	2.1	1.8	2.3	1.7	2.3	1.9	2.4	1.9	2.5	1.8	2.7	1.8
	86	30.0	2.0	1.7	2.1	1.7	2.2	1.7	2.3	1.8	2.4	1.8	2.5	1.8	2.6	1.8
	91	32.5	2.0	1.7	2.0	1.7	2.2	1.7	2.2	1.8	2.3	1.8	2.4	1.8	2.6	1.8
	95	35.0	2.0	1.7	2.0	1.7	2.1	1.7	2.2	1.8	2.3	1.8	2.4	1.8	2.5	1.8
	100	37.5	1.9	1.6	1.9	1.7	2.1	1.7	2.1	1.8	2.2	1.8	2.4	1.8	2.5	1.7
	104	40.0	1.9	1.6	1.9	1.7	2.0	1.6	2.1	1.8	2.4	1.8	2.3	1.7	2.4	1.7
	110	43.0	1.8	1.6	1.8	1.6	2.0	1.6	2.0	1.7	2.1	1.7	2.2	1.7	2.4	1.7
25 (2.8)	68	20.0	2.7	2.0	2.8	2.1	3.0	2.1	3.1	2.2	3.2	2.2	3.4	2.2	3.6	2.1
	73	22.5	2.7	2.0	2.8	2.1	3.0	2.1	3.1	2.2	3.2	2.2	3.4	2.1	3.6	2.1
	77	25.0	2.7	2.0	2.7	2.0	2.9	2.0	3.0	2.2	3.1	2.1	3.3	2.1	3.5	2.1
	82	27.5	2.6	2.0	2.7	2.0	2.9	2.0	3.0	2.1	3.1	2.1	3.2	2.1	3.4	2.1
	86	30.0	2.6	1.9	2.6	2.0	2.8	2.0	2.9	2.1	3.0	2.1	3.2	2.1	3.4	2.0
	91	32.5	2.5	1.9	2.6	2.0	2.8	2.0	2.9	2.1	2.9	2.1	3.1	2.0	3.3	2.0
	95	35.0	2.5	1.9	2.5	1.9	2.7	1.9	2.8	2.1	2.9	2.0	3.1	2.0	3.2	2.0
	100	37.5	2.5	1.9	2.5	1.9	2.6	1.9	2.7	2.0	2.8	2.0	3.0	2.0	3.2	2.0
	104	40.0	2.4	1.9	2.4	1.9	2.6	1.9	2.7	2.0	3.0	2.1	2.9	2.0	3.1	1.9
	110	43.0	2.4	1.8	2.4	1.9	2.5	1.9	2.6	2.0	2.7	2.0	2.8	1.9	3.0	1.9
32 (3.6)	68	20.0	3.5	2.5	3.6	2.5	3.9	2.5	4.0	2.7	4.2	2.7	4.4	2.6	4.7	2.6
	73	22.5	3.5	2.5	3.6	2.5	3.8	2.5	4.0	2.7	4.1	2.6	4.3	2.6	4.6	2.6
	77	25.0	3.4	2.4	3.5	2.5	3.8	2.5	3.9	2.6	4.0	2.6	4.2	2.6	4.5	2.5
	82	27.5	3.4	2.4	3.5	2.5	3.7	2.5	3.8	2.6	3.9	2.6	4.2	2.5	4.4	2.5
	86	30.0	3.3	2.4	3.4	2.4	3.6	2.4	3.7	2.6	3.9	2.5	4.1	2.5	4.3	2.5
	91	32.5	3.3	2.4	3.3	2.4	3.5	2.4	3.7	2.5	3.8	2.5	4.0	2.5	4.2	2.4
	95	35.0	3.2	2.3	3.3	2.4	3.5	2.3	3.6	2.5	3.7	2.5	3.9	2.4	4.2	2.4
	100	37.5	3.2	2.3	3.2	2.3	3.4	2.3	3.5	2.5	3.6	2.4	3.9	2.4	4.1	2.4
	104	40.0	3.1	2.3	3.1	2.3	3.3	2.3	3.4	2.4	3.9	2.6	3.8	2.4	4.0	2.3
	110	43.0	3.0	2.2	3.0	2.3	3.2	2.2	3.3	2.4	3.4	2.4	3.7	2.3	3.9	2.3

kcal/h = kW x 860, Btu/h = kW x 3,412

A2. Cooling capacity with PUHY-P300-400YHM /PUHY-EP300, 400Y(S)HM PURY-P300-400YHM /PURY-EP300, 400Y(S)HM

PEFY-P-VMS1(L)-E

CA : Capacity(kW) SHC : Sensible Heat Capacity(kW)

Model size (Rated kW)	Outdoor air temp.		Indoor air temp.													
			71 ˚FDB / 59˚FWB		73˚FDB / 61˚FWB		77˚FDB / 64˚FWB		81˚FDB / 66˚FWB		82˚FDB / 68˚FWB		86˚FDB / 72˚FWB		90˚FDB / 75˚FWB	
			21.5˚CDB / 15˚CWB		23˚CDB / 16˚CWB		25˚CDB / 18˚CWB		27˚CDB / 19˚CWB		28˚CDB / 20˚CWB		30˚CDB / 22˚CWB		32˚CDB / 24˚CWB	
	˚FDB	˚CDB	CA	SHC	CA	SHC	CA	SHC	CA	SHC	CA	SHC	CA	SHC	CA	SHC
15 (1.7)	68	20.0	1.6	1.5	1.7	1.5	1.8	1.5	1.9	1.7	2.0	1.7	2.1	1.6	2.2	1.6
	73	22.5	1.6	1.5	1.7	1.5	1.8	1.5	1.9	1.6	1.9	1.6	2.0	1.6	2.2	1.6
	77	25.0	1.6	1.5	1.7	1.5	1.8	1.5	1.8	1.6	1.9	1.6	2.0	1.6	2.1	1.6
	82	27.5	1.6	1.5	1.6	1.5	1.7	1.5	1.8	1.6	1.9	1.6	2.0	1.6	2.1	1.6
	86	30.0	1.6	1.4	1.6	1.5	1.7	1.5	1.8	1.6	1.8	1.6	1.9	1.6	2.0	1.6
	91	32.5	1.5	1.4	1.6	1.5	1.7	1.5	1.7	1.6	1.8	1.6	1.9	1.6	2.0	1.5
	95	35.0	1.5	1.4	1.5	1.5	1.6	1.5	1.7	1.6	1.8	1.6	1.9	1.6	2.0	1.5
	100	37.5	1.5	1.4	1.5	1.5	1.6	1.4	1.7	1.6	1.7	1.6	1.8	1.5	1.9	1.5
	104	40.0	1.5	1.4	1.5	1.4	1.6	1.4	1.6	1.6	1.8	1.6	1.8	1.5	1.9	1.5
	110	43.0	1.4	1.4	1.4	1.4	1.5	1.4	1.6	1.5	1.6	1.5	1.7	1.5	1.8	1.5
20 (2.2)	68	20.0	2.1	1.8	2.2	1.9	2.4	1.9	2.5	2.0	2.5	2.0	2.7	2.0	2.9	1.9
	73	22.5	2.1	1.8	2.2	1.9	2.3	1.9	2.4	2.0	2.5	2.0	2.6	1.9	2.8	1.9
	77	25.0	2.1	1.8	2.2	1.8	2.3	1.8	2.4	2.0	2.4	2.0	2.6	1.9	2.8	1.9
	82	27.5	2.1	1.8	2.1	1.8	2.3	1.8	2.3	1.9	2.4	1.9	2.5	1.9	2.7	1.9
	86	30.0	2.0	1.8	2.1	1.8	2.2	1.8	2.3	1.9	2.4	1.9	2.5	1.9	2.6	1.9
	91	32.5	2.0	1.7	2.0	1.8	2.2	1.8	2.2	1.9	2.3	1.9	2.4	1.9	2.6	1.9
	95	35.0	2.0	1.7	2.0	1.8	2.1	1.8	2.2	1.9	2.3	1.9	2.4	1.9	2.5	1.8
	100	37.5	1.9	1.7	1.9	1.8	2.1	1.7	2.1	1.9	2.2	1.9	2.4	1.8	2.5	1.8
	104	40.0	1.9	1.7	1.9	1.7	2.0	1.7	2.1	1.9	2.4	1.9	2.3	1.8	2.4	1.8
	110	43.0	1.8	1.7	1.8	1.7	2.0	1.7	2.0	1.8	2.1	1.8	2.2	1.8	2.4	1.8
25 (2.8)	68	20.0	2.7	2.2	2.8	2.2	3.0	2.2	3.1	2.4	3.2	2.4	3.4	2.3	3.6	2.3
	73	22.5	2.7	2.2	2.8	2.2	3.0	2.2	3.1	2.4	3.2	2.4	3.4	2.3	3.6	2.3
	77	25.0	2.7	2.1	2.7	2.2	2.9	2.2	3.0	2.3	3.1	2.3	3.3	2.3	3.5	2.3
	82	27.5	2.6	2.1	2.7	2.2	2.9	2.2	3.0	2.3	3.1	2.3	3.2	2.3	3.4	2.2
	86	30.0	2.6	2.1	2.6	2.2	2.8	2.1	2.9	2.3	3.0	2.3	3.2	2.3	3.4	2.2
	91	32.5	2.5	2.1	2.6	2.1	2.8	2.1	2.9	2.3	2.9	2.3	3.1	2.2	3.3	2.2
	95	35.0	2.5	2.1	2.5	2.1	2.7	2.1	2.8	2.2	2.9	2.2	3.1	2.2	3.2	2.2
	100	37.5	2.5	2.0	2.5	2.1	2.6	2.1	2.7	2.2	2.8	2.2	3.0	2.2	3.2	2.2
	104	40.0	2.4	2.0	2.4	2.1	2.6	2.1	2.7	2.2	3.0	2.3	2.9	2.2	3.1	2.1
	110	43.0	2.4	2.0	2.4	2.0	2.5	2.0	2.6	2.2	2.7	2.2	2.8	2.1	3.0	2.1
32 (3.6)	68	20.0	3.5	2.6	3.6	2.7	3.9	2.7	4.0	2.9	4.2	2.9	4.4	2.8	4.7	2.8
	73	22.5	3.5	2.6	3.6	2.7	3.8	2.7	4.0	2.8	4.1	2.8	4.3	2.8	4.6	2.7
	77	25.0	3.4	2.6	3.5	2.7	3.8	2.6	3.9	2.8	4.0	2.8	4.2	2.8	4.5	2.7
	82	27.5	3.4	2.6	3.5	2.6	3.7	2.6	3.8	2.8	3.9	2.8	4.2	2.7	4.4	2.7
	86	30.0	3.3	2.5	3.4	2.6	3.6	2.6	3.7	2.7	3.9	2.7	4.1	2.7	4.3	2.7
	91	32.5	3.3	2.5	3.3	2.6	3.5	2.6	3.7	2.7	3.8	2.7	4.0	2.7	4.2	2.6
	95	35.0	3.2	2.5	3.3	2.5	3.5	2.5	3.6	2.7	3.7	2.7	3.9	2.6	4.2	2.6
	100	37.5	3.2	2.5	3.2	2.5	3.4	2.5	3.5	2.6	3.6	2.6	3.9	2.6	4.1	2.6
	104	40.0	3.1	2.4	3.1	2.5	3.3	2.5	3.4	2.6	3.9	2.8	3.8	2.6	4.0	2.5
	110	43.0	3.0	2.4	3.0	2.4	3.2	2.4	3.3	2.6	3.4	2.6	3.7	2.5	3.9	2.5
40 (4.5)	68	20.0	4.4	3.2	4.5	3.3	4.9	3.3	5.0	3.5	5.2	3.5	5.5	3.4	5.9	3.4
	73	22.5	4.3	3.2	4.5	3.3	4.8	3.3	5.0	3.4	5.1	3.4	5.4	3.4	5.7	3.3
	77	25.0	4.3	3.2	4.4	3.2	4.7	3.2	4.9	3.4	5.0	3.4	5.3	3.3	5.6	3.3
	82	27.5	4.2	3.1	4.3	3.2	4.6	3.2	4.8	3.4	4.9	3.3	5.2	3.3	5.5	3.2
	86	30.0	4.1	3.1	4.2	3.2	4.5	3.1	4.7	3.3	4.8	3.3	5.1	3.3	5.4	3.2
	91	32.5	4.1	3.0	4.2	3.1	4.4	3.1	4.6	3.3	4.7	3.3	5.0	3.2	5.3	3.2
	95	35.0	4.0	3.0	4.1	3.1	4.3	3.0	4.5	3.2	4.6	3.2	4.9	3.2	5.2	3.1
	100	37.5	4.0	3.0	4.0	3.0	4.3	3.0	4.4	3.2	4.5	3.2	4.8	3.1	5.1	3.1
	104	40.0	3.9	3.0	3.9	3.0	4.2	3.0	4.3	3.2	4.9	3.3	4.7	3.1	5.0	3.1
	110	43.0	3.8	2.9	3.8	2.9	4.1	2.9	4.2	3.1	4.3	3.1	4.6	3.1	4.8	3.0
50 (5.6)	68	20.0	5.4	3.9	5.6	4.0	6.0	4.0	6.3	4.3	6.5	4.2	6.9	4.2	7.3	4.1
	73	22.5	5.4	3.9	5.6	4.0	6.0	4.0	6.2	4.2	6.4	4.2	6.7	4.1	7.1	4.1
	77	25.0	5.3	3.9	5.5	4.0	5.9	3.9	6.0	4.2	6.2	4.1	6.6	4.1	7.0	4.0
	82	27.5	5.2	3.8	5.4	3.9	5.7	3.9	5.9	4.1	6.1	4.1	6.5	4.0	6.9	4.0
	86	30.0	5.2	3.8	5.3	3.9	5.6	3.8	5.8	4.1	6.0	4.0	6.4	4.0	6.7	3.9
	91	32.5	5.1	3.7	5.2	3.8	5.5	3.8	5.7	4.0	5.9	4.0	6.2	3.9	6.6	3.9
	95	35.0	5.0	3.7	5.1	3.8	5.4	3.7	5.6	4.0	5.8	3.9	6.1	3.9	6.5	3.8
	100	37.5	4.9	3.7	5.0	3.7	5.3	3.7	5.5	3.9	5.7	3.9	6.0	3.8	6.3	3.8
	104	40.0	4.8	3.6	4.8	3.7	5.2	3.6	5.3	3.9	6.1	4.1	5.9	3.8	6.2	3.7
	110	43.0	4.7	3.5	4.7	3.6	5.0	3.6	5.2	3.8	5.3	3.8	5.7	3.7	6.0	3.7
63 (7.1)	68	20.0	6.9	4.9	7.1	5.1	7.7	5.1	8.0	5.4	8.2	5.4	8.7	5.3	9.2	5.2
	73	22.5	6.9	4.9	7.1	5.1	7.6	5.0	7.8	5.3	8.1	5.3	8.5	5.2	9.1	5.1
	77	25.0	6.8	4.9	7.0	5.0	7.4	5.0	7.7	5.3	7.9	5.2	8.4	5.2	8.9	5.1
	82	27.5	6.6	4.8	6.8	4.9	7.3	4.9	7.5	5.2	7.8	5.2	8.2	5.1	8.7	5.0
	86	30.0	6.5	4.8	6.7	4.9	7.1	4.8	7.4	5.1	7.6	5.1	8.1	5.0	8.5	4.9
	91	32.5	6.4	4.7	6.6	4.8	7.0	4.8	7.2	5.1	7.5	5.0	7.9	5.0	8.4	4.9
	95	35.0	6.3	4.7	6.4	4.7	6.8	4.7	7.1	5.0	7.3	5.0	7.7	4.9	8.2	4.8
	100	37.5	6.2	4.6	6.3	4.7	6.7	4.7	6.9	4.9	7.2	4.9	7.6	4.8	8.0	4.8
	104	40.0	6.1	4.6	6.1	4.6	6.6	4.6	6.8	4.9	7.7	5.1	7.4	4.8	7.8	4.7
	110	43.0	6.0	4.5	6.0	4.5	6.4	4.5	6.6	4.8	6.8	4.8	7.2	4.7	7.6	4.6

kcal/h = kW x 860, Btu/h = kW x 3,412

CT

A3. Cooling capacity with PUHY-P450-650Y(S)HM/PUHY-EP450-650YSHM PURY-P450-650YSHM/PURY-EP450-600YSHM

PEFY-P-VMH-E

CA : Capacity(kW) SHC : Sensible Heat Capacity(kW)

Model size (Rated kW)	Outdoor air temp.		Indoor air temp.													
			71 ˚FDB / 59˚FWB		73˚FDB / 61˚FWB		77˚FDB / 64˚FWB		81˚FDB / 66˚FWB		82˚FDB / 68˚FWB		86˚FDB / 72˚FWB		90˚FDB / 75˚FWB	
			21.5˚CDB / 15˚CWB		23˚CDB / 16˚CWB		25˚CDB / 18˚CWB		27˚CDB / 19˚CWB		28˚CDB / 20˚CWB		30˚CDB / 22˚CWB		32˚CDB / 24˚CWB	
	˚FDB	˚CDB	CA	SHC	CA	SHC	CA	SHC	CA	SHC	CA	SHC	CA	SHC	CA	SHC
40 (4.5)	68	20.0	4.3	3.2	4.4	3.3	4.7	3.3	4.8	3.4	5.0	3.5	5.3	3.5	5.7	3.4
	73	22.5	4.2	3.2	4.3	3.3	4.6	3.3	4.8	3.4	5.0	3.5	5.3	3.5	5.6	3.4
	77	25.0	4.2	3.2	4.3	3.3	4.6	3.3	4.7	3.3	4.9	3.5	5.2	3.4	5.6	3.4
	82	27.5	4.1	3.2	4.2	3.3	4.5	3.3	4.7	3.3	4.9	3.5	5.2	3.4	5.4	3.3
	86	30.0	4.1	3.2	4.2	3.2	4.5	3.2	4.6	3.3	4.8	3.4	5.1	3.4	5.4	3.4
	91	32.5	4.1	3.1	4.1	3.2	4.4	3.2	4.5	3.3	4.8	3.4	5.1	3.4	5.4	3.3
	95	35.0	4.0	3.1	4.1	3.2	4.4	3.2	4.5	3.2	4.7	3.4	5.0	3.4	5.4	3.3
	100	37.5	4.0	3.1	4.0	3.2	4.3	3.2	4.4	3.2	4.7	3.4	5.0	3.3	5.3	3.3
	104	40.0	3.9	3.1	4.0	3.2	4.3	3.2	4.4	3.2	4.6	3.3	5.0	3.3	5.3	3.3
	110	43.0	3.9	3.1	3.9	3.1	4.2	3.1	4.3	3.2	4.5	3.3	4.9	3.3	5.2	3.3
50 (5.6)	68	20.0	5.3	3.8	5.5	3.9	5.8	3.9	6.0	3.9	6.2	4.1	6.6	4.0	7.1	4.0
	73	22.5	5.3	3.8	5.4	3.9	5.8	3.9	5.9	3.9	6.2	4.1	6.6	4.0	7.0	4.0
	77	25.0	5.2	3.8	5.3	3.8	5.7	3.8	5.9	3.9	6.1	4.0	6.5	4.0	6.9	3.9
	82	27.5	5.2	3.7	5.3	3.8	5.7	3.8	5.8	3.8	6.0	4.0	6.4	4.0	6.7	3.9
	86	30.0	5.1	3.7	5.2	3.8	5.6	3.8	5.8	3.8	6.0	4.0	6.4	3.9	6.8	3.9
	91	32.5	5.0	3.7	5.2	3.8	5.5	3.7	5.7	3.8	5.9	4.0	6.3	3.9	6.7	3.9
	95	35.0	5.0	3.6	5.1	3.7	5.5	3.7	5.6	3.7	5.8	3.9	6.3	3.9	6.7	3.8
	100	37.5	4.9	3.6	5.0	3.7	5.4	3.7	5.5	3.7	5.8	3.9	6.2	3.9	6.6	3.8
	104	40.0	4.8	3.6	5.0	3.7	5.3	3.7	5.4	3.7	5.7	3.9	6.2	3.9	6.6	3.8
	110	43.0	4.8	3.6	4.9	3.6	5.3	3.6	5.4	3.7	5.7	3.8	6.0	3.8	6.5	3.8
63 (7.1)	68	20.0	6.7	5.0	6.9	5.1	7.4	5.1	7.6	5.2	7.9	5.4	8.4	5.3	8.9	5.3
	73	22.5	6.7	5.0	6.9	5.1	7.3	5.1	7.5	5.1	7.8	5.4	8.3	5.3	8.8	5.2
	77	25.0	6.6	4.9	6.8	5.1	7.2	5.0	7.5	5.1	7.7	5.3	8.2	5.3	8.8	5.2
	82	27.5	6.5	4.9	6.7	5.0	7.2	5.0	7.4	5.1	7.7	5.3	8.2	5.2	8.5	5.1
	86	30.0	6.5	4.9	6.6	5.0	7.1	5.0	7.3	5.1	7.6	5.3	8.1	5.2	8.6	5.1
	91	32.5	6.4	4.8	6.5	5.0	7.0	4.9	7.2	5.0	7.5	5.2	8.0	5.2	8.5	5.1
	95	35.0	6.3	4.8	6.4	4.9	6.9	4.9	7.1	5.0	7.4	5.2	8.0	5.2	8.4	5.1
	100	37.5	6.2	4.8	6.4	4.9	6.8	4.9	7.0	4.9	7.3	5.2	7.8	5.1	8.4	5.1
	104	40.0	6.1	4.7	6.3	4.8	6.8	4.8	6.9	4.9	7.2	5.1	7.8	5.1	8.3	5.0
	110	43.0	6.1	4.7	6.2	4.8	6.7	4.8	6.8	4.8	7.2	5.1	7.7	5.1	8.2	5.0
71 (8.0)	68	20.0	7.6	5.6	7.8	5.7	8.3	5.7	8.6	5.8	8.9	6.0	9.4	5.9	10.1	5.9
	73	22.5	7.5	5.6	7.7	5.7	8.2	5.7	8.5	5.7	8.8	6.0	9.4	5.9	10.0	5.8
	77	25.0	7.4	5.5	7.6	5.7	8.2	5.6	8.4	5.7	8.7	5.9	9.3	5.9	9.9	5.8
	82	27.5	7.4	5.5	7.5	5.6	8.1	5.6	8.3	5.7	8.6	5.9	9.2	5.9	9.6	5.7
	86	30.0	7.3	5.4	7.4	5.6	8.0	5.6	8.2	5.6	8.6	5.9	9.1	5.8	9.7	5.7
	91	32.5	7.2	5.4	7.4	5.5	7.8	5.5	8.1	5.6	8.5	5.8	9.0	5.8	9.6	5.7
	95	35.0	7.1	5.4	7.2	5.5	7.8	5.5	8.0	5.5	8.3	5.8	9.0	5.8	9.5	5.7
	100	37.5	7.0	5.3	7.2	5.4	7.7	5.4	7.9	5.5	8.3	5.8	8.8	5.7	9.4	5.6
	104	40.0	6.9	5.3	7.1	5.4	7.6	5.4	7.8	5.4	8.2	5.7	8.8	5.7	9.4	5.6
	110	43.0	6.9	5.2	7.0	5.4	7.5	5.3	7.7	5.4	8.1	5.7	8.6	5.6	9.3	5.6
80 (9.0)	68	20.0	8.5	6.3	8.8	6.5	9.4	6.5	9.6	6.5	10.0	6.8	10.6	6.7	11.3	6.7
	73	22.5	8.5	6.3	8.7	6.5	9.3	6.4	9.5	6.5	9.9	6.8	10.6	6.7	11.2	6.6
	77	25.0	8.4	6.2	8.6	6.4	9.2	6.4	9.5	6.5	9.8	6.7	10.4	6.7	11.1	6.6
	82	27.5	8.3	6.2	8.5	6.3	9.1	6.3	9.4	6.4	9.7	6.7	10.4	6.6	10.8	6.5
	86	30.0	8.2	6.2	8.4	6.3	9.0	6.3	9.3	6.4	9.6	6.7	10.3	6.6	10.9	6.5
	91	32.5	8.1	6.1	8.3	6.3	8.8	6.2	9.1	6.3	9.5	6.6	10.2	6.6	10.8	6.5
	95	35.0	8.0	6.1	8.1	6.2	8.8	6.2	9.0	6.3	9.4	6.5	10.1	6.5	10.7	6.4
	100	37.5	7.9	6.0	8.1	6.2	8.6	6.1	8.9	6.2	9.3	6.5	9.9	6.5	10.6	6.4
	104	40.0	7.8	6.0	8.0	6.1	8.6	6.1	8.7	6.2	9.2	6.5	9.9	6.4	10.5	6.4
	110	43.0	7.7	5.9	7.9	6.1	8.5	6.1	8.6	6.1	9.1	6.4	9.7	6.4	10.4	6.3
100 (11.2)	68	20.0	10.6	8.5	10.9	8.8	11.6	8.7	12.0	8.9	12.5	9.3	13.2	9.2	14.1	9.1
	73	22.5	10.5	8.5	10.8	8.7	11.5	8.7	11.9	8.8	12.3	9.2	13.2	9.1	13.9	9.0
	77	25.0	10.4	8.4	10.7	8.7	11.4	8.6	11.8	8.8	12.2	9.2	13.0	9.1	13.8	9.0
	82	27.5	10.3	8.4	10.5	8.6	11.3	8.6	11.6	8.7	12.1	9.1	12.9	9.0	13.4	8.8
	86	30.0	10.2	8.3	10.4	8.6	11.2	8.5	11.5	8.7	12.0	9.1	12.8	9.0	13.6	8.9
	91	32.5	10.1	8.3	10.3	8.5	11.0	8.4	11.3	8.6	11.9	9.0	12.7	9.0	13.4	8.8
	95	35.0	10.0	8.2	10.1	8.4	10.9	8.4	11.2	8.6	11.6	9.0	12.5	8.9	13.3	8.8
	100	37.5	9.9	8.2	10.0	8.4	10.8	8.3	11.0	8.5	11.6	8.9	12.4	8.9	13.2	8.8
	104	40.0	9.7	8.1	9.9	8.3	10.7	8.3	10.9	8.4	11.4	8.9	12.3	8.8	13.1	8.7
	110	43.0	9.6	8.1	9.8	8.3	10.5	8.2	10.8	8.4	11.3	8.8	12.1	8.8	13.0	8.7
125 (14.0)	68	20.0	13.2	9.8	13.7	10.1	14.6	10.0	15.0	10.1	15.6	10.6	16.5	10.4	17.6	10.3
	73	22.5	13.2	9.8	13.5	10.0	14.4	9.9	14.8	10.1	15.4	10.5	16.5	10.4	17.4	10.2
	77	25.0	13.0	9.7	13.4	9.9	14.3	9.9	14.7	10.0	15.3	10.4	16.2	10.3	17.3	10.2
	82	27.5	12.9	9.6	13.2	9.8	14.1	9.8	14.6	10.0	15.1	10.4	16.1	10.3	16.8	10.0
	86	30.0	12.7	9.5	13.0	9.8	14.0	9.8	14.4	9.9	15.0	10.3	16.0	10.2	16.9	10.1
	91	32.5	12.6	9.5	12.9	9.7	13.7	9.6	14.1	9.8	14.8	10.3	15.8	10.2	16.8	10.0
	95	35.0	12.5	9.4	12.7	9.6	13.7	9.6	14.0	9.7	14.6	10.1	15.7	10.1	16.7	10.0
	100	37.5	12.3	9.3	12.6	9.6	13.4	9.5	13.8	9.6	14.5	10.1	15.5	10.0	16.5	9.9
	104	40.0	12.1	9.2	12.4	9.5	13.4	9.5	13.6	9.5	14.3	10.0	15.4	10.0	16.4	9.9
	110	43.0	12.0	9.2	12.3	9.4	13.2	9.4	13.4	9.5	14.1	10.0	15.1	9.9	16.2	9.8

kcal/h = kW x 860, Btu/h = kW x 3,412

A3. Cooling capacity with PUHY-P450-650Y(S)HM/PUHY-EP450-650YSHM PURY-P450-650YSHM/PURY-EP450-600YSHM

PEFY-P-VMH-E

CA : Capacity(kW) SHC : Sensible Heat Capacity(kW)

Model size (Rated kW)	Outdoor air temp.		Indoor air temp.													
			71 ˚FDB / 59˚FWB		73˚FDB / 61˚FWB		77˚FDB / 64˚FWB		81˚FDB / 66˚FWB		82˚FDB / 68˚FWB		86˚FDB / 72˚FWB		90˚FDB / 75˚FWB	
			21.5˚CDB / 15˚CWB		23˚CDB / 16˚CWB		25˚CDB / 18˚CWB		27˚CDB / 19˚CWB		28˚CDB / 20˚CWB		30˚CDB / 22˚CWB		32˚CDB / 24˚CWB	
	˚FDB	˚CDB	CA	SHC	CA	SHC	CA	SHC	CA	SHC	CA	SHC	CA	SHC	CA	SHC
140 (16.0)	68	20.0	15.1	11.2	15.6	11.5	16.6	11.4	17.1	11.6	17.8	12.1	18.9	11.9	20.2	11.8
	73	22.5	15.0	11.2	15.4	11.4	16.5	11.4	17.0	11.5	17.6	12.0	18.8	11.9	19.9	11.7
	77	25.0	14.9	11.1	15.3	11.4	16.3	11.3	16.8	11.5	17.4	11.9	18.6	11.8	19.8	11.7
	82	27.5	14.7	11.0	15.0	11.2	16.2	11.2	16.6	11.4	17.3	11.9	18.4	11.7	19.2	11.4
	86	30.0	14.6	10.9	14.9	11.2	16.0	11.2	16.5	11.3	17.1	11.8	18.2	11.7	19.4	11.5
	91	32.5	14.4	10.8	14.7	11.1	15.7	11.0	16.2	11.2	17.0	11.7	18.1	11.6	19.2	11.4
	95	35.0	14.2	10.8	14.5	11.0	15.6	11.0	16.0	11.1	16.6	11.6	17.9	11.6	19.0	11.4
	100	37.5	14.1	10.7	14.4	10.9	15.4	10.9	15.8	11.0	16.6	11.6	17.7	11.5	18.9	11.3
	104	40.0	13.8	10.6	14.2	10.8	15.3	10.8	15.5	10.9	16.3	11.5	17.6	11.4	18.7	11.3
	110	43.0	13.8	10.5	14.0	10.8	15.0	10.7	15.4	10.8	16.2	11.4	17.3	11.3	18.6	11.2
200 (22.4)	68	20.0	21.2	16.0	21.8	16.5	23.3	16.4	24.0	16.6	25.0	17.4	26.4	17.1	28.2	17.0
	73	22.5	21.1	16.0	21.6	16.4	23.1	16.3	23.7	16.6	24.6	17.3	26.3	17.1	27.9	16.8
	77	25.0	20.8	15.9	21.4	16.3	22.8	16.2	23.5	16.5	24.4	17.2	26.0	17.0	27.7	16.8
	82	27.5	20.6	15.8	21.1	16.2	22.6	16.1	23.3	16.4	24.2	17.1	25.8	16.9	26.9	16.5
	86	30.0	20.4	15.7	20.8	16.0	22.4	16.0	23.1	16.3	24.0	17.0	25.5	16.8	27.1	16.6
	91	32.5	20.2	15.5	20.6	15.9	22.0	15.8	22.6	16.1	23.7	16.9	25.3	16.7	26.9	16.5
	95	35.0	19.9	15.4	20.3	15.8	21.8	15.8	22.4	16.0	23.3	16.7	25.1	16.6	26.7	16.4
	100	37.5	19.7	15.3	20.1	15.7	21.5	15.6	22.1	15.9	23.2	16.7	24.8	16.5	26.4	16.3
	104	40.0	19.4	15.2	19.8	15.6	21.4	15.6	21.7	15.7	22.8	16.5	24.6	16.5	26.2	16.2
	110	43.0	19.3	15.1	19.6	15.5	21.1	15.4	21.5	15.6	22.6	16.4	24.2	16.3	26.0	16.2
250 (28.0)	68	20.0	26.5	19.9	27.3	20.5	29.1	20.4	30.0	20.7	31.2	21.6	33.0	21.3	35.3	21.1
	73	22.5	26.3	19.9	27.0	20.4	28.8	20.3	29.7	20.6	30.8	21.4	32.9	21.3	34.9	20.9
	77	25.0	26.0	19.7	26.7	20.3	28.6	20.2	29.4	20.5	30.5	21.3	32.5	21.1	34.6	20.8
	82	27.5	25.8	19.6	26.3	20.1	28.3	20.0	29.1	20.3	30.2	21.2	32.2	21.0	33.6	20.5
	86	30.0	25.5	19.5	26.0	19.9	28.0	19.9	28.8	20.2	30.0	21.1	31.9	20.9	33.9	20.6
	91	32.5	25.2	19.3	25.8	19.8	27.4	19.7	28.3	20.0	29.7	21.0	31.6	20.8	33.6	20.5
	95	35.0	24.9	19.2	25.3	19.6	27.3	19.6	28.0	19.9	29.1	20.8	31.4	20.7	33.3	20.4
	100	37.5	24.6	19.1	25.1	19.5	26.9	19.4	27.6	19.7	29.0	20.7	30.9	20.5	33.0	20.3
	104	40.0	24.2	18.8	24.8	19.4	26.7	19.4	27.2	19.5	28.6	20.5	30.8	20.4	32.8	20.2
	110	43.0	24.1	18.8	24.5	19.2	26.3	19.2	26.9	19.4	28.3	20.4	30.2	20.2	32.5	20.1

kcal/h = kW x 860, Btu/h = kW x 3,412

CT

A3. Cooling capacity with PUHY-P450-650Y(S)HM/PUHY-EP450-650YSHM PURY-P450-650YSHM/PURY-EP450-600YSHM

PEFY-P-VMR-E-L/R

CA : Capacity(kW) SHC : Sensible Heat Capacity(kW)

Model size (Rated kW)	Outdoor air temp.		Indoor air temp.													
			71 ˚FDB / 59˚FWB		73˚FDB / 61˚FWB		77˚FDB / 64˚FWB		81˚FDB / 66˚FWB		82˚FDB / 68˚FWB		86˚FDB / 72˚FWB		90˚FDB / 75˚FWB	
			21.5˚CDB / 15˚CWB		23˚CDB / 16˚CWB		25˚CDB / 18˚CWB		27˚CDB / 19˚CWB		28˚CDB / 20˚CWB		30˚CDB / 22˚CWB		32˚CDB / 24˚CWB	
	˚FDB	˚CDB	CA	SHC	CA	SHC	CA	SHC	CA	SHC	CA	SHC	CA	SHC	CA	SHC
20 (2.2)	68	20.0	2.1	1.7	2.1	1.8	2.3	1.8	2.4	1.9	2.5	1.9	2.6	1.8	2.8	1.8
	73	22.5	2.1	1.7	2.1	1.8	2.3	1.7	2.3	1.9	2.4	1.9	2.6	1.8	2.7	1.8
	77	25.0	2.0	1.7	2.1	1.7	2.2	1.7	2.3	1.9	2.4	1.9	2.6	1.8	2.7	1.8
	82	27.5	2.0	1.7	2.1	1.7	2.2	1.7	2.3	1.8	2.4	1.8	2.5	1.8	2.6	1.8
	86	30.0	2.0	1.7	2.0	1.7	2.2	1.7	2.3	1.8	2.4	1.8	2.5	1.8	2.7	1.8
	91	32.5	2.0	1.7	2.0	1.7	2.2	1.7	2.2	1.8	2.3	1.8	2.5	1.8	2.6	1.8
	95	35.0	2.0	1.7	2.0	1.7	2.1	1.7	2.2	1.8	2.3	1.8	2.5	1.8	2.6	1.8
	100	37.5	1.9	1.6	2.0	1.7	2.1	1.7	2.2	1.8	2.3	1.8	2.4	1.8	2.6	1.8
	104	40.0	1.9	1.6	1.9	1.7	2.1	1.7	2.1	1.8	2.2	1.8	2.4	1.8	2.6	1.8
	110	43.0	1.9	1.6	1.9	1.7	2.1	1.7	2.1	1.8	2.2	1.8	2.4	1.8	2.6	1.8
25 (2.8)	68	20.0	2.6	2.0	2.7	2.0	2.9	2.0	3.0	2.1	3.1	2.1	3.3	2.1	3.5	2.1
	73	22.5	2.6	2.0	2.7	2.0	2.9	2.0	3.0	2.1	3.1	2.1	3.3	2.1	3.5	2.1
	77	25.0	2.6	2.0	2.7	2.0	2.9	2.0	2.9	2.1	3.1	2.1	3.2	2.1	3.5	2.1
	82	27.5	2.6	1.9	2.6	2.0	2.8	2.0	2.9	2.1	3.0	2.1	3.2	2.1	3.4	2.0
	86	30.0	2.5	1.9	2.6	2.0	2.8	2.0	2.9	2.1	3.0	2.1	3.2	2.1	3.4	2.0
	91	32.5	2.5	1.9	2.6	2.0	2.7	2.0	2.8	2.1	3.0	2.1	3.2	2.1	3.4	2.0
	95	35.0	2.5	1.9	2.5	1.9	2.7	1.9	2.8	2.1	2.9	2.1	3.1	2.0	3.3	2.0
	100	37.5	2.5	1.9	2.5	1.9	2.7	1.9	2.8	2.0	2.9	2.1	3.1	2.0	3.3	2.0
	104	40.0	2.4	1.9	2.5	1.9	2.7	1.9	2.7	2.0	2.9	2.0	3.1	2.0	3.3	2.0
	110	43.0	2.4	1.9	2.5	1.9	2.6	1.9	2.7	2.0	2.8	2.0	3.0	2.0	3.2	2.0
32 (3.6)	68	20.0	3.4	2.4	3.5	2.5	3.7	2.5	3.9	2.6	4.0	2.6	4.2	2.6	4.5	2.5
	73	22.5	3.4	2.4	3.5	2.5	3.7	2.5	3.8	2.6	4.0	2.6	4.2	2.6	4.5	2.5
	77	25.0	3.3	2.4	3.4	2.5	3.7	2.4	3.8	2.6	3.9	2.6	4.2	2.5	4.4	2.5
	82	27.5	3.3	2.4	3.4	2.4	3.6	2.4	3.7	2.6	3.9	2.6	4.1	2.5	4.3	2.5
	86	30.0	3.3	2.4	3.3	2.4	3.6	2.4	3.7	2.5	3.9	2.5	4.1	2.5	4.4	2.5
	91	32.5	3.2	2.3	3.3	2.4	3.5	2.4	3.6	2.5	3.8	2.5	4.1	2.5	4.3	2.5
	95	35.0	3.2	2.3	3.3	2.4	3.5	2.4	3.6	2.5	3.7	2.5	4.0	2.5	4.3	2.5
	100	37.5	3.2	2.3	3.2	2.4	3.5	2.3	3.5	2.5	3.7	2.5	4.0	2.5	4.2	2.4
	104	40.0	3.1	2.3	3.2	2.3	3.4	2.3	3.5	2.4	3.7	2.5	4.0	2.5	4.2	2.4
	110	43.0	3.1	2.3	3.2	2.3	3.4	2.3	3.5	2.4	3.6	2.4	3.9	2.4	4.2	2.4

kcal/h = kW x 860, Btu/h = kW x 3,412

A3. Cooling capacity with PUHY-P450-650Y(S)HM/PUHY-EP450-650YSHM PURY-P450-650YSHM/PURY-EP450-600YSHM

PEFY-P-VMS1(L)-E

CA : Capacity(kW) SHC : Sensible Heat Capacity(kW)

Model size (Rated kW)	Outdoor air temp.		Indoor air temp.													
			71 ˚FDB / 59˚FWB		73˚FDB / 61˚FWB		77˚FDB / 64˚FWB		81˚FDB / 66˚FWB		82˚FDB / 68˚FWB		86˚FDB / 72˚FWB		90˚FDB / 75˚FWB	
			21.5˚CDB / 15˚CWB		23˚CDB / 16˚CWB		25˚CDB / 18˚CWB		27˚CDB / 19˚CWB		28˚CDB / 20˚CWB		30˚CDB / 22˚CWB		32˚CDB / 24˚CWB	
	˚FDB	˚CDB	CA	SHC	CA	SHC	CA	SHC	CA	SHC	CA	SHC	CA	SHC	CA	SHC
15 (1.7)	68	20.0	1.6	1.5	1.7	1.5	1.8	1.5	1.8	1.6	1.9	1.6	2.0	1.6	2.1	1.6
	73	22.5	1.6	1.5	1.6	1.5	1.8	1.5	1.8	1.6	1.9	1.6	2.0	1.6	2.1	1.6
	77	25.0	1.6	1.5	1.6	1.5	1.7	1.5	1.8	1.6	1.9	1.6	2.0	1.6	2.1	1.6
	82	27.5	1.6	1.4	1.6	1.5	1.7	1.5	1.8	1.6	1.8	1.6	2.0	1.6	2.0	1.6
	86	30.0	1.5	1.4	1.6	1.5	1.7	1.5	1.8	1.6	1.8	1.6	1.9	1.6	2.1	1.6
	91	32.5	1.5	1.4	1.6	1.5	1.7	1.5	1.7	1.6	1.8	1.6	1.9	1.6	2.0	1.6
	95	35.0	1.5	1.4	1.5	1.5	1.7	1.5	1.7	1.6	1.8	1.6	1.9	1.6	2.0	1.6
	100	37.5	1.5	1.4	1.5	1.5	1.6	1.5	1.7	1.6	1.8	1.6	1.9	1.6	2.0	1.5
	104	40.0	1.5	1.4	1.5	1.5	1.6	1.5	1.6	1.6	1.7	1.6	1.9	1.6	2.0	1.5
	110	43.0	1.5	1.4	1.5	1.5	1.6	1.4	1.6	1.6	1.7	1.6	1.8	1.5	2.0	1.5
20 (2.2)	68	20.0	2.1	1.8	2.1	1.8	2.3	1.8	2.4	2.0	2.5	2.0	2.6	1.9	2.8	1.9
	73	22.5	2.1	1.8	2.1	1.8	2.3	1.8	2.3	1.9	2.4	1.9	2.6	1.9	2.7	1.9
	77	25.0	2.0	1.8	2.1	1.8	2.2	1.8	2.3	1.9	2.4	1.9	2.6	1.9	2.7	1.9
	82	27.5	2.0	1.8	2.1	1.8	2.2	1.8	2.3	1.9	2.4	1.9	2.5	1.9	2.6	1.9
	86	30.0	2.0	1.7	2.0	1.8	2.2	1.8	2.3	1.9	2.4	1.9	2.5	1.9	2.7	1.9
	91	32.5	2.0	1.7	2.0	1.8	2.2	1.8	2.2	1.9	2.3	1.9	2.5	1.9	2.6	1.9
	95	35.0	2.0	1.7	2.0	1.8	2.1	1.8	2.2	1.9	2.3	1.9	2.5	1.9	2.6	1.9
	100	37.5	1.9	1.7	2.0	1.8	2.1	1.8	2.2	1.9	2.3	1.9	2.4	1.9	2.6	1.9
	104	40.0	1.9	1.7	1.9	1.8	2.1	1.8	2.1	1.9	2.2	1.9	2.4	1.9	2.6	1.8
	110	43.0	1.9	1.7	1.9	1.7	2.1	1.7	2.1	1.9	2.2	1.9	2.4	1.9	2.6	1.8
25 (2.8)	68	20.0	2.6	2.1	2.7	2.2	2.9	2.2	3.0	2.3	3.1	2.3	3.3	2.3	3.5	2.3
	73	22.5	2.6	2.1	2.7	2.2	2.9	2.2	3.0	2.3	3.1	2.3	3.3	2.3	3.5	2.3
	77	25.0	2.6	2.1	2.7	2.2	2.9	2.2	2.9	2.3	3.1	2.3	3.2	2.3	3.5	2.2
	82	27.5	2.6	2.1	2.6	2.2	2.8	2.2	2.9	2.3	3.0	2.3	3.2	2.3	3.4	2.2
	86	30.0	2.5	2.1	2.6	2.1	2.8	2.1	2.9	2.3	3.0	2.3	3.2	2.3	3.4	2.2
	91	32.5	2.5	2.1	2.6	2.1	2.7	2.1	2.8	2.3	3.0	2.3	3.2	2.2	3.4	2.2
	95	35.0	2.5	2.1	2.5	2.1	2.7	2.1	2.8	2.2	2.9	2.2	3.1	2.2	3.3	2.2
	100	37.5	2.5	2.0	2.5	2.1	2.7	2.1	2.8	2.2	2.9	2.2	3.1	2.2	3.3	2.2
	104	40.0	2.4	2.0	2.5	2.1	2.7	2.1	2.7	2.2	2.9	2.2	3.1	2.2	3.3	2.2
	110	43.0	2.4	2.0	2.5	2.1	2.6	2.1	2.7	2.2	2.8	2.2	3.0	2.2	3.2	2.2
32 (3.6)	68	20.0	3.4	2.6	3.5	2.7	3.7	2.6	3.9	2.8	4.0	2.8	4.2	2.8	4.5	2.7
	73	22.5	3.4	2.6	3.5	2.6	3.7	2.6	3.8	2.8	4.0	2.8	4.2	2.8	4.5	2.7
	77	25.0	3.3	2.6	3.4	2.6	3.7	2.6	3.8	2.8	3.9	2.8	4.2	2.7	4.4	2.7
	82	27.5	3.3	2.5	3.4	2.6	3.6	2.6	3.7	2.7	3.9	2.7	4.1	2.7	4.3	2.6
	86	30.0	3.3	2.5	3.3	2.6	3.6	2.6	3.7	2.7	3.9	2.7	4.1	2.7	4.4	2.7
	91	32.5	3.2	2.5	3.3	2.6	3.5	2.5	3.6	2.7	3.8	2.7	4.1	2.7	4.3	2.6
	95	35.0	3.2	2.5	3.3	2.5	3.5	2.5	3.6	2.7	3.7	2.7	4.0	2.7	4.3	2.6
	100	37.5	3.2	2.5	3.2	2.5	3.5	2.5	3.5	2.7	3.7	2.7	4.0	2.7	4.2	2.6
	104	40.0	3.1	2.4	3.2	2.5	3.4	2.5	3.5	2.6	3.7	2.7	4.0	2.6	4.2	2.6
	110	43.0	3.1	2.4	3.2	2.5	3.4	2.5	3.5	2.6	3.6	2.6	3.9	2.6	4.2	2.6
40 (4.5)	68	20.0	4.3	3.1	4.4	3.2	4.7	3.2	4.8	3.4	5.0	3.4	5.3	3.3	5.7	3.3
	73	22.5	4.2	3.1	4.3	3.2	4.6	3.2	4.8	3.4	5.0	3.4	5.3	3.3	5.6	3.3
	77	25.0	4.2	3.1	4.3	3.2	4.6	3.2	4.7	3.3	4.9	3.3	5.2	3.3	5.6	3.3
	82	27.5	4.1	3.1	4.2	3.2	4.5	3.1	4.7	3.3	4.9	3.3	5.2	3.3	5.4	3.2
	86	30.0	4.1	3.1	4.2	3.1	4.5	3.1	4.6	3.3	4.8	3.3	5.1	3.3	5.4	3.2
	91	32.5	4.1	3.0	4.1	3.1	4.4	3.1	4.5	3.3	4.8	3.3	5.1	3.3	5.4	3.2
	95	35.0	4.0	3.0	4.1	3.1	4.4	3.1	4.5	3.2	4.7	3.2	5.0	3.2	5.4	3.2
	100	37.5	4.0	3.0	4.0	3.1	4.3	3.0	4.4	3.2	4.7	3.2	5.0	3.2	5.3	3.2
	104	40.0	3.9	3.0	4.0	3.0	4.3	3.0	4.4	3.2	4.6	3.2	5.0	3.2	5.3	3.2
	110	43.0	3.9	2.9	3.9	3.0	4.2	3.0	4.3	3.2	4.5	3.2	4.9	3.2	5.2	3.1
50 (5.6)	68	20.0	5.3	3.8	5.5	4.0	5.8	3.9	6.0	4.1	6.2	4.1	6.6	4.1	7.1	4.0
	73	22.5	5.3	3.8	5.4	3.9	5.8	3.9	5.9	4.1	6.2	4.1	6.6	4.1	7.0	4.0
	77	25.0	5.2	3.8	5.3	3.9	5.7	3.9	5.9	4.1	6.1	4.1	6.5	4.0	6.9	4.0
	82	27.5	5.2	3.8	5.3	3.9	5.7	3.8	5.8	4.1	6.0	4.1	6.4	4.0	6.7	3.9
	86	30.0	5.1	3.7	5.2	3.8	5.6	3.8	5.8	4.0	6.0	4.0	6.4	4.0	6.8	3.9
	91	32.5	5.0	3.7	5.2	3.8	5.5	3.8	5.7	4.0	5.9	4.0	6.3	4.0	6.7	3.9
	95	35.0	5.0	3.7	5.1	3.8	5.5	3.8	5.6	4.0	5.8	4.0	6.3	3.9	6.7	3.9
	100	37.5	4.9	3.7	5.0	3.7	5.4	3.7	5.5	3.9	5.8	4.0	6.2	3.9	6.6	3.9
	104	40.0	4.8	3.6	5.0	3.7	5.3	3.7	5.4	3.9	5.7	3.9	6.2	3.9	6.6	3.9
	110	43.0	4.8	3.6	4.9	3.7	5.3	3.7	5.4	3.9	5.7	3.9	6.0	3.9	6.5	3.8
63 (7.1)	68	20.0	6.7	4.9	6.9	5.0	7.4	5.0	7.6	5.2	7.9	5.2	8.4	5.2	8.9	5.1
	73	22.5	6.7	4.8	6.9	5.0	7.3	4.9	7.5	5.2	7.8	5.2	8.3	5.1	8.8	5.1
	77	25.0	6.6	4.8	6.8	4.9	7.2	4.9	7.5	5.2	7.7	5.2	8.2	5.1	8.8	5.0
	82	27.5	6.5	4.8	6.7	4.9	7.2	4.9	7.4	5.1	7.7	5.1	8.2	5.1	8.5	4.9
	86	30.0	6.5	4.7	6.6	4.8	7.1	4.8	7.3	5.1	7.6	5.1	8.1	5.0	8.6	5.0
	91	32.5	6.4	4.7	6.5	4.8	7.0	4.8	7.2	5.0	7.5	5.1	8.0	5.0	8.5	4.9
	95	35.0	6.3	4.7	6.4	4.7	6.9	4.7	7.1	5.0	7.4	5.0	8.0	5.0	8.4	4.9
	100	37.5	6.2	4.6	6.4	4.7	6.8	4.7	7.0	5.0	7.3	5.0	7.8	4.9	8.4	4.9
	104	40.0	6.1	4.6	6.3	4.7	6.8	4.7	6.9	4.9	7.2	4.9	7.8	4.9	8.3	4.9
	110	43.0	6.1	4.6	6.2	4.6	6.7	4.6	6.8	4.9	7.2	4.9	7.7	4.9	8.2	4.8

kcal/h = kW x 860, Btu/h = kW x 3,412

CT

A4. Cooling capacity with PUHY-P700-800YSHM/PUHY-EP700-800YSHM PURY-P700-800YSHM

PEFY-P-VMH-E

CA : Capacity(kW) SHC : Sensible Heat Capacity(kW)

Model size (Rated kW)	Outdoor air temp.		Indoor air temp.													
			71 ˚FDB / 59˚FWB		73˚FDB / 61˚FWB		77˚FDB / 64˚FWB		81˚FDB / 66˚FWB		82˚FDB / 68˚FWB		86˚FDB / 72˚FWB		90˚FDB / 75˚FWB	
			21.5˚CDB / 15˚CWB		23˚CDB / 16˚CWB		25˚CDB / 18˚CWB		27˚CDB / 19˚CWB		28˚CDB / 20˚CWB		30˚CDB / 22˚CWB		32˚CDB / 24˚CWB	
	˚FDB	˚CDB	CA	SHC	CA	SHC	CA	SHC	CA	SHC	CA	SHC	CA	SHC	CA	SHC
40 (4.5)	68	20.0	4.3	3.3	4.5	3.4	4.8	3.4	5.0	3.5	5.2	3.6	5.5	3.6	5.9	3.5
	73	22.5	4.3	3.3	4.4	3.4	4.7	3.4	4.9	3.4	5.1	3.6	5.4	3.5	5.8	3.5
	77	25.0	4.2	3.2	4.4	3.3	4.7	3.3	4.8	3.4	5.0	3.5	5.3	3.5	5.7	3.4
	82	27.5	4.1	3.2	4.3	3.3	4.6	3.3	4.7	3.3	4.9	3.5	5.2	3.4	5.6	3.4
	86	30.0	4.1	3.1	4.2	3.3	4.5	3.2	4.7	3.3	4.8	3.4	5.1	3.4	5.5	3.4
	91	32.5	4.0	3.1	4.1	3.2	4.4	3.2	4.6	3.3	4.7	3.4	5.0	3.4	5.4	3.3
	95	35.0	3.9	3.1	4.1	3.2	4.3	3.2	4.5	3.2	4.6	3.4	5.0	3.3	5.3	3.3
	100	37.5	3.8	3.0	4.0	3.2	4.3	3.1	4.4	3.2	4.6	3.3	4.9	3.3	5.2	3.3
	104	40.0	3.8	3.0	3.9	3.1	4.2	3.1	4.3	3.2	4.5	3.3	4.8	3.3	5.1	3.2
	110	43.0	3.7	3.0	3.8	3.1	4.1	3.0	4.2	3.1	4.4	3.3	4.7	3.2	5.0	3.2
50 (5.6)	68	20.0	5.4	3.9	5.6	4.0	6.0	4.0	6.2	4.0	6.4	4.2	6.9	4.1	7.3	4.1
	73	22.5	5.3	3.8	5.5	3.9	5.9	3.9	6.1	4.0	6.3	4.1	6.8	4.1	7.2	4.0
	77	25.0	5.3	3.8	5.4	3.9	5.8	3.9	6.0	3.9	6.2	4.1	6.6	4.0	7.1	4.0
	82	27.5	5.2	3.7	5.3	3.8	5.7	3.8	5.9	3.9	6.1	4.0	6.5	4.0	6.9	3.9
	86	30.0	5.0	3.7	5.2	3.8	5.6	3.8	5.8	3.8	6.0	4.0	6.4	3.9	6.8	3.9
	91	32.5	5.0	3.6	5.1	3.7	5.5	3.7	5.7	3.8	5.9	3.9	6.3	3.9	6.7	3.9
	95	35.0	4.9	3.6	5.0	3.7	5.4	3.7	5.6	3.7	5.8	3.9	6.2	3.9	6.6	3.8
	100	37.5	4.8	3.5	5.0	3.7	5.3	3.6	5.5	3.7	5.7	3.9	6.0	3.8	6.4	3.8
	104	40.0	4.7	3.5	4.8	3.6	5.2	3.6	5.4	3.7	5.6	3.8	5.9	3.8	6.3	3.7
	110	43.0	4.6	3.4	4.7	3.5	5.0	3.5	5.2	3.6	5.4	3.7	5.8	3.7	6.2	3.7
63 (7.1)	68	20.0	6.9	5.1	7.1	5.2	7.6	5.2	7.9	5.3	8.2	5.5	8.7	5.5	9.3	5.4
	73	22.5	6.7	5.0	7.0	5.2	7.5	5.2	7.8	5.2	8.0	5.5	8.6	5.4	9.1	5.3
	77	25.0	6.7	5.0	6.9	5.1	7.4	5.1	7.6	5.2	7.9	5.4	8.4	5.3	8.9	5.3
	82	27.5	6.5	4.9	6.7	5.1	7.2	5.0	7.5	5.1	7.7	5.3	8.3	5.3	8.8	5.2
	86	30.0	6.4	4.8	6.6	5.0	7.1	5.0	7.3	5.1	7.6	5.3	8.1	5.2	8.7	5.2
	91	32.5	6.3	4.8	6.5	4.9	7.0	4.9	7.2	5.0	7.5	5.2	8.0	5.2	8.5	5.1
	95	35.0	6.2	4.7	6.4	4.9	6.8	4.9	7.1	5.0	7.3	5.2	7.8	5.1	8.3	5.0
	100	37.5	6.1	4.7	6.3	4.9	6.7	4.8	7.0	4.9	7.2	5.1	7.7	5.1	8.2	5.0
	104	40.0	6.0	4.6	6.1	4.8	6.6	4.7	6.8	4.8	7.1	5.1	7.5	5.0	8.0	4.9
	110	43.0	5.8	4.6	6.0	4.7	6.4	4.7	6.6	4.8	6.9	5.0	7.3	4.9	7.8	4.9
71 (8.0)	68	20.0	7.7	5.7	8.0	5.8	8.6	5.8	8.9	5.9	9.2	6.2	9.8	6.1	10.4	6.0
	73	22.5	7.6	5.6	7.9	5.8	8.4	5.8	8.7	5.9	9.0	6.1	9.7	6.0	10.2	5.9
	77	25.0	7.5	5.6	7.8	5.7	8.3	5.7	8.6	5.8	8.9	6.0	9.4	5.9	10.1	5.9
	82	27.5	7.4	5.5	7.6	5.6	8.2	5.6	8.4	5.7	8.7	5.9	9.3	5.9	9.9	5.8
	86	30.0	7.2	5.4	7.5	5.6	8.0	5.6	8.3	5.7	8.6	5.9	9.1	5.8	9.8	5.8
	91	32.5	7.1	5.3	7.3	5.5	7.8	5.5	8.1	5.6	8.4	5.8	9.0	5.8	9.6	5.7
	95	35.0	7.0	5.3	7.2	5.5	7.7	5.4	8.0	5.5	8.2	5.7	8.8	5.7	9.4	5.6
	100	37.5	6.8	5.2	7.1	5.4	7.6	5.4	7.8	5.5	8.1	5.7	8.6	5.6	9.2	5.6
	104	40.0	6.7	5.2	6.9	5.3	7.4	5.3	7.7	5.4	8.0	5.6	8.5	5.6	9.0	5.5
	110	43.0	6.6	5.1	6.7	5.2	7.2	5.2	7.5	5.3	7.8	5.5	8.3	5.5	8.8	5.4
80 (9.0)	68	20.0	8.7	6.4	9.0	6.6	9.7	6.6	10.0	6.7	10.4	7.0	11.1	6.9	11.7	6.8
	73	22.5	8.6	6.3	8.9	6.5	9.5	6.5	9.8	6.6	10.2	6.9	10.9	6.8	11.5	6.7
	77	25.0	8.5	6.3	8.7	6.5	9.4	6.5	9.7	6.6	10.0	6.8	10.6	6.7	11.3	6.7
	82	27.5	8.3	6.2	8.6	6.4	9.2	6.4	9.5	6.5	9.8	6.7	10.5	6.7	11.2	6.6
	86	30.0	8.1	6.1	8.4	6.3	9.0	6.3	9.3	6.4	9.6	6.7	10.3	6.6	11.0	6.5
	91	32.5	8.0	6.0	8.2	6.2	8.8	6.2	9.1	6.3	9.5	6.6	10.1	6.5	10.8	6.4
	95	35.0	7.8	6.0	8.1	6.2	8.6	6.1	9.0	6.3	9.3	6.5	9.9	6.4	10.5	6.4
	100	37.5	7.7	5.9	8.0	6.1	8.5	6.1	8.8	6.2	9.1	6.5	9.7	6.4	10.4	6.3
	104	40.0	7.6	5.8	7.7	6.0	8.3	6.0	8.6	6.1	9.0	6.4	9.5	6.3	10.1	6.2
	110	43.0	7.4	5.8	7.6	5.9	8.1	5.9	8.4	6.0	8.7	6.3	9.3	6.2	9.9	6.1
100 (11.2)	68	20.0	10.8	8.6	11.2	8.9	12.0	8.9	12.5	9.1	12.9	9.4	13.8	9.4	14.6	9.2
	73	22.5	10.6	8.5	11.0	8.8	11.8	8.8	12.2	9.0	12.7	9.4	13.6	9.3	14.3	9.1
	77	25.0	10.5	8.5	10.9	8.8	11.6	8.7	12.0	8.9	12.4	9.3	13.2	9.2	14.1	9.1
	82	27.5	10.3	8.4	10.6	8.7	11.4	8.6	11.8	8.8	12.2	9.2	13.0	9.1	13.9	9.0
	86	30.0	10.1	8.3	10.5	8.6	11.2	8.5	11.6	8.7	12.0	9.1	12.8	9.0	13.7	8.9
	91	32.5	9.9	8.2	10.2	8.5	11.0	8.4	11.4	8.6	11.8	9.0	12.5	8.9	13.4	8.8
	95	35.0	9.7	8.1	10.1	8.4	10.8	8.3	11.2	8.6	11.5	8.9	12.3	8.8	13.1	8.7
	100	37.5	9.6	8.0	10.0	8.3	10.6	8.3	11.0	8.5	11.4	8.8	12.1	8.8	12.9	8.6
	104	40.0	9.4	7.9	9.6	8.2	10.4	8.2	10.8	8.4	11.1	8.8	11.9	8.7	12.6	8.6
	110	43.0	9.2	7.8	9.4	8.1	10.1	8.1	10.5	8.3	10.9	8.7	11.6	8.6	12.3	8.5
125 (14.0)	68	20.0	13.5	9.9	14.0	10.2	15.1	10.2	15.6	10.4	16.1	10.8	17.2	10.7	18.3	10.6
	73	22.5	13.3	9.8	13.8	10.1	14.8	10.1	15.3	10.3	15.8	10.7	16.9	10.6	17.9	10.4
	77	25.0	13.2	9.8	13.6	10.0	14.6	10.0	15.1	10.2	15.5	10.6	16.5	10.4	17.6	10.3
	82	27.5	12.9	9.6	13.3	9.9	14.3	9.9	14.8	10.0	15.3	10.4	16.3	10.4	17.4	10.2
	86	30.0	12.6	9.5	13.1	9.8	14.0	9.8	14.5	9.9	15.0	10.3	16.0	10.2	17.1	10.1
	91	32.5	12.4	9.4	12.8	9.7	13.7	9.6	14.2	9.8	14.7	10.2	15.7	10.1	16.7	10.0
	95	35.0	12.2	9.3	12.6	9.6	13.4	9.5	14.0	9.7	14.4	10.1	15.4	10.0	16.4	9.9
	100	37.5	12.0	9.2	12.5	9.5	13.2	9.4	13.7	9.6	14.2	10.0	15.1	9.9	16.1	9.8
	104	40.0	11.8	9.1	12.0	9.3	13.0	9.3	13.4	9.5	13.9	9.9	14.8	9.8	15.8	9.6
	110	43.0	11.5	8.9	11.8	9.2	12.6	9.1	13.1	9.3	13.6	9.7	14.5	9.6	15.4	9.5

kcal/h = kW x 860, Btu/h = kW x 3,412

A4. Cooling capacity with PUHY-P700-800YSHM/PUHY-EP700-800YSHM PURY-P700-800YSHM

PEFY-P-VMH-E

CA : Capacity(kW) SHC : Sensible Heat Capacity(kW)

Model size (Rated kW)	Outdoor air temp.		Indoor air temp.													
			71 ˚FDB / 59˚FWB		73˚FDB / 61˚FWB		77˚FDB / 64˚FWB		81˚FDB / 66˚FWB		82˚FDB / 68˚FWB		86˚FDB / 72˚FWB		90˚FDB / 75˚FWB	
			21.5˚CDB / 15˚CWB		23˚CDB / 16˚CWB		25˚CDB / 18˚CWB		27˚CDB / 19˚CWB		28˚CDB / 20˚CWB		30˚CDB / 22˚CWB		32˚CDB / 24˚CWB	
	˚FDB	˚CDB	CA	SHC	CA	SHC	CA	SHC	CA	SHC	CA	SHC	CA	SHC	CA	SHC
140 (16.0)	68	20.0	15.4	11.4	16.0	11.7	17.2	11.7	17.8	11.9	18.4	12.3	19.7	12.2	20.9	12.1
	73	22.5	15.2	11.2	15.8	11.6	16.9	11.6	17.5	11.7	18.1	12.2	19.4	12.1	20.5	11.9
	77	25.0	15.0	11.2	15.5	11.5	16.6	11.4	17.2	11.6	17.8	12.1	18.9	11.9	20.2	11.8
	82	27.5	14.7	11.0	15.2	11.3	16.3	11.3	16.9	11.5	17.4	11.9	18.6	11.8	19.8	11.7
	86	30.0	14.4	10.8	15.0	11.2	16.0	11.2	16.6	11.3	17.1	11.8	18.2	11.7	19.5	11.6
	91	32.5	14.2	10.7	14.6	11.1	15.7	11.0	16.2	11.2	16.8	11.7	17.9	11.6	19.1	11.4
	95	35.0	13.9	10.6	14.4	10.9	15.4	10.9	16.0	11.1	16.5	11.5	17.6	11.4	18.7	11.3
	100	37.5	13.7	10.5	14.2	10.9	15.1	10.8	15.7	11.0	16.2	11.4	17.3	11.3	18.4	11.2
	104	40.0	13.4	10.4	13.8	10.6	14.8	10.6	15.4	10.8	15.9	11.3	17.0	11.2	18.0	11.0
	110	43.0	13.1	10.2	13.4	10.5	14.4	10.4	15.0	10.7	15.5	11.1	16.6	11.0	17.6	10.9
200 (22.4)	68	20.0	21.6	16.3	22.4	16.8	24.1	16.8	24.9	17.0	25.8	17.7	27.6	17.6	29.2	17.3
	73	22.5	21.3	16.1	22.1	16.6	23.6	16.6	24.5	16.9	25.3	17.5	27.1	17.4	28.7	17.1
	77	25.0	21.1	16.0	21.7	16.5	23.3	16.4	24.1	16.7	24.9	17.4	26.4	17.1	28.2	17.0
	82	27.5	20.6	15.8	21.3	16.3	22.8	16.2	23.6	16.5	24.4	17.2	26.1	17.0	27.8	16.8
	86	30.0	20.2	15.5	20.9	16.1	22.4	16.0	23.2	16.3	24.0	17.0	25.5	16.8	27.3	16.6
	91	32.5	19.8	15.4	20.5	15.9	22.0	15.8	22.7	16.1	23.5	16.8	25.1	16.6	26.8	16.4
	95	35.0	19.5	15.2	20.2	15.7	21.5	15.6	22.4	16.0	23.1	16.6	24.6	16.5	26.2	16.2
	100	37.5	19.2	15.1	19.9	15.6	21.2	15.5	22.0	15.8	22.7	16.5	24.2	16.3	25.8	16.1
	104	40.0	18.8	14.9	19.3	15.3	20.7	15.3	21.5	15.6	22.3	16.3	23.7	16.1	25.2	15.9
	110	43.0	18.4	14.7	18.8	15.1	20.2	15.0	20.9	15.4	21.7	16.1	23.2	15.9	24.6	15.7
250 (28.0)	68	20.0	27.0	20.2	28.0	20.9	30.1	20.8	31.2	21.2	32.2	22.0	34.4	21.9	36.5	21.5
	73	22.5	26.6	20.0	27.6	20.7	29.5	20.6	30.6	21.0	31.6	21.8	33.9	21.6	35.8	21.3
	77	25.0	26.3	19.9	27.2	20.5	29.1	20.4	30.1	20.7	31.1	21.6	33.0	21.3	35.3	21.1
	82	27.5	25.8	19.6	26.6	20.2	28.6	20.2	29.5	20.5	30.5	21.3	32.6	21.1	34.7	20.9
	86	30.0	25.2	19.3	26.2	20.0	28.0	19.9	29.0	20.3	30.0	21.1	31.9	20.9	34.2	20.7
	91	32.5	24.8	19.1	25.6	19.7	27.4	19.7	28.4	20.0	29.4	20.9	31.4	20.7	33.5	20.4
	95	35.0	24.4	18.9	25.2	19.5	26.9	19.4	28.0	19.9	28.8	20.6	30.8	20.4	32.8	20.2
	100	37.5	23.9	18.7	24.9	19.4	26.5	19.2	27.4	19.6	28.4	20.5	30.2	20.2	32.2	20.0
	104	40.0	23.5	18.5	24.1	19.0	25.9	19.0	26.9	19.4	27.9	20.2	29.7	20.0	31.5	19.7
	110	43.0	23.0	18.2	23.5	18.8	25.2	18.7	26.2	19.1	27.2	20.0	29.0	19.8	30.8	19.5

kcal/h = kW x 860, Btu/h = kW x 3,412

CT

A4. Cooling capacity with PUHY-P700-800YSHM/PUHY-EP700-800YSHM PURY-P700-800YSHM

PEFY-P-VMR-E-L/R

CA : Capacity(kW) SHC : Sensible Heat Capacity(kW)

Model size (Rated kW)	Outdoor air temp.		Indoor air temp.													
			71 ˚FDB / 59˚FWB		73˚FDB / 61˚FWB		77˚FDB / 64˚FWB		81˚FDB / 66˚FWB		82˚FDB / 68˚FWB		86˚FDB / 72˚FWB		90˚FDB / 75˚FWB	
			21.5˚CDB / 15˚CWB		23˚CDB / 16˚CWB		25˚CDB / 18˚CWB		27˚CDB / 19˚CWB		28˚CDB / 20˚CWB		30˚CDB / 22˚CWB		32˚CDB / 24˚CWB	
	˚FDB	˚CDB	CA	SHC	CA	SHC	CA	SHC	CA	SHC	CA	SHC	CA	SHC	CA	SHC
20 (2.2)	68	20.0	2.1	1.7	2.2	1.8	2.4	1.8	2.4	1.9	2.5	1.9	2.7	1.9	2.9	1.9
	73	22.5	2.1	1.7	2.2	1.8	2.3	1.8	2.4	1.9	2.5	1.9	2.7	1.9	2.8	1.8
	77	25.0	2.1	1.7	2.1	1.8	2.3	1.8	2.4	1.9	2.4	1.9	2.6	1.8	2.8	1.8
	82	27.5	2.0	1.7	2.1	1.7	2.2	1.7	2.3	1.9	2.4	1.9	2.6	1.8	2.7	1.8
	86	30.0	2.0	1.7	2.1	1.7	2.2	1.7	2.3	1.8	2.4	1.8	2.5	1.8	2.7	1.8
	91	32.5	1.9	1.6	2.0	1.7	2.2	1.7	2.2	1.8	2.3	1.8	2.5	1.8	2.6	1.8
	95	35.0	1.9	1.6	2.0	1.7	2.1	1.7	2.2	1.8	2.3	1.8	2.4	1.8	2.6	1.8
	100	37.5	1.9	1.6	2.0	1.7	2.1	1.7	2.2	1.8	2.2	1.8	2.4	1.8	2.5	1.7
	104	40.0	1.8	1.6	1.9	1.7	2.0	1.6	2.1	1.8	2.2	1.8	2.3	1.8	2.5	1.7
	110	43.0	1.8	1.6	1.8	1.6	2.0	1.6	2.1	1.8	2.1	1.7	2.3	1.7	2.4	1.7
25 (2.8)	68	20.0	2.7	2.0	2.8	2.1	3.0	2.1	3.1	2.2	3.2	2.2	3.4	2.2	3.7	2.1
	73	22.5	2.7	2.0	2.8	2.1	3.0	2.0	3.1	2.2	3.2	2.2	3.4	2.1	3.6	2.1
	77	25.0	2.6	2.0	2.7	2.0	2.9	2.0	3.0	2.1	3.1	2.1	3.3	2.1	3.5	2.1
	82	27.5	2.6	1.9	2.7	2.0	2.9	2.0	3.0	2.1	3.1	2.1	3.3	2.1	3.5	2.1
	86	30.0	2.5	1.9	2.6	2.0	2.8	2.0	2.9	2.1	3.0	2.1	3.2	2.1	3.4	2.1
	91	32.5	2.5	1.9	2.6	2.0	2.7	2.0	2.8	2.1	2.9	2.1	3.1	2.0	3.3	2.0
	95	35.0	2.4	1.9	2.5	1.9	2.7	1.9	2.8	2.1	2.9	2.0	3.1	2.0	3.3	2.0
	100	37.5	2.4	1.9	2.5	1.9	2.6	1.9	2.7	2.0	2.8	2.0	3.0	2.0	3.2	2.0
	104	40.0	2.4	1.8	2.4	1.9	2.6	1.9	2.7	2.0	2.8	2.0	3.0	2.0	3.2	2.0
	110	43.0	2.3	1.8	2.4	1.9	2.5	1.9	2.6	2.0	2.7	2.0	2.9	2.0	3.1	1.9
32 (3.6)	68	20.0	3.5	2.5	3.6	2.5	3.9	2.5	4.0	2.7	4.1	2.7	4.4	2.6	4.7	2.6
	73	22.5	3.4	2.4	3.5	2.5	3.8	2.5	3.9	2.6	4.1	2.6	4.4	2.6	4.6	2.6
	77	25.0	3.4	2.4	3.5	2.5	3.7	2.5	3.9	2.6	4.0	2.6	4.2	2.6	4.5	2.5
	82	27.5	3.3	2.4	3.4	2.4	3.7	2.4	3.8	2.6	3.9	2.6	4.2	2.6	4.5	2.5
	86	30.0	3.2	2.3	3.4	2.4	3.6	2.4	3.7	2.5	3.9	2.5	4.1	2.5	4.4	2.5
	91	32.5	3.2	2.3	3.3	2.4	3.5	2.4	3.7	2.5	3.8	2.5	4.0	2.5	4.3	2.5
	95	35.0	3.1	2.3	3.2	2.4	3.5	2.3	3.6	2.5	3.7	2.5	4.0	2.5	4.2	2.4
	100	37.5	3.1	2.3	3.2	2.3	3.4	2.3	3.5	2.5	3.7	2.5	3.9	2.4	4.1	2.4
	104	40.0	3.0	2.2	3.1	2.3	3.3	2.3	3.5	2.4	3.6	2.4	3.8	2.4	4.1	2.4
	110	43.0	3.0	2.2	3.0	2.3	3.2	2.2	3.4	2.4	3.5	2.4	3.7	2.4	4.0	2.3

kcal/h = kW x 860, Btu/h = kW x 3,412

A4. Cooling capacity with PUHY-P700-800YSHM/PUHY-EP700-800YSHM PURY-P700-800YSHM

PEFY-P-VMS1(L)-E

CA : Capacity(kW) SHC : Sensible Heat Capacity(kW)

Model size (Rated kW)	Outdoor air temp.		Indoor air temp.													
			71 ˚FDB / 59˚FWB		73˚FDB / 61˚FWB		77˚FDB / 64˚FWB		81˚FDB / 66˚FWB		82˚FDB / 68˚FWB		86˚FDB / 72˚FWB		90˚FDB / 75˚FWB	
			21.5˚CDB / 15˚CWB		23˚CDB / 16˚CWB		25˚CDB / 18˚CWB		27˚CDB / 19˚CWB		28˚CDB / 20˚CWB		30˚CDB / 22˚CWB		32˚CDB / 24˚CWB	
	˚FDB	˚CDB	CA	SHC	CA	SHC	CA	SHC	CA	SHC	CA	SHC	CA	SHC	CA	SHC
15 (1.7)	68	20.0	1.6	1.5	1.7	1.5	1.8	1.5	1.9	1.7	2.0	1.7	2.1	1.6	2.2	1.6
	73	22.5	1.6	1.5	1.7	1.5	1.8	1.5	1.9	1.6	1.9	1.6	2.1	1.6	2.2	1.6
	77	25.0	1.6	1.5	1.6	1.5	1.8	1.5	1.8	1.6	1.9	1.6	2.0	1.6	2.1	1.6
	82	27.5	1.6	1.4	1.6	1.5	1.7	1.5	1.8	1.6	1.9	1.6	2.0	1.6	2.1	1.6
	86	30.0	1.5	1.4	1.6	1.5	1.7	1.5	1.8	1.6	1.8	1.6	1.9	1.6	2.1	1.6
	91	32.5	1.5	1.4	1.6	1.5	1.7	1.5	1.7	1.6	1.8	1.6	1.9	1.6	2.0	1.6
	95	35.0	1.5	1.4	1.5	1.5	1.6	1.5	1.7	1.6	1.8	1.6	1.9	1.6	2.0	1.5
	100	37.5	1.5	1.4	1.5	1.5	1.6	1.4	1.7	1.6	1.7	1.6	1.8	1.5	2.0	1.5
	104	40.0	1.4	1.4	1.5	1.4	1.6	1.4	1.6	1.6	1.7	1.6	1.8	1.5	1.9	1.5
	110	43.0	1.4	1.4	1.4	1.4	1.5	1.4	1.6	1.5	1.6	1.5	1.8	1.5	1.9	1.5
20 (2.2)	68	20.0	2.1	1.8	2.2	1.9	2.4	1.9	2.4	2.0	2.5	2.0	2.7	2.0	2.9	1.9
	73	22.5	2.1	1.8	2.2	1.9	2.3	1.8	2.4	2.0	2.5	2.0	2.7	2.0	2.8	1.9
	77	25.0	2.1	1.8	2.1	1.8	2.3	1.8	2.4	2.0	2.4	2.0	2.6	1.9	2.8	1.9
	82	27.5	2.0	1.8	2.1	1.8	2.2	1.8	2.3	1.9	2.4	1.9	2.6	1.9	2.7	1.9
	86	30.0	2.0	1.7	2.1	1.8	2.2	1.8	2.3	1.9	2.4	1.9	2.5	1.9	2.7	1.9
	91	32.5	1.9	1.7	2.0	1.8	2.2	1.8	2.2	1.9	2.3	1.9	2.5	1.9	2.6	1.9
	95	35.0	1.9	1.7	2.0	1.8	2.1	1.8	2.2	1.9	2.3	1.9	2.4	1.9	2.6	1.8
	100	37.5	1.9	1.7	2.0	1.8	2.1	1.7	2.2	1.9	2.2	1.9	2.4	1.9	2.5	1.8
	104	40.0	1.8	1.7	1.9	1.7	2.0	1.7	2.1	1.9	2.2	1.9	2.3	1.8	2.5	1.8
	110	43.0	1.8	1.7	1.8	1.7	2.0	1.7	2.1	1.8	2.1	1.8	2.3	1.8	2.4	1.8
25 (2.8)	68	20.0	2.7	2.2	2.8	2.2	3.0	2.2	3.1	2.4	3.2	2.4	3.4	2.4	3.7	2.3
	73	22.5	2.7	2.1	2.8	2.2	3.0	2.2	3.1	2.4	3.2	2.3	3.4	2.3	3.6	2.3
	77	25.0	2.6	2.1	2.7	2.2	2.9	2.2	3.0	2.3	3.1	2.3	3.3	2.3	3.5	2.3
	82	27.5	2.6	2.1	2.7	2.2	2.9	2.2	3.0	2.3	3.1	2.3	3.3	2.3	3.5	2.3
	86	30.0	2.5	2.1	2.6	2.2	2.8	2.1	2.9	2.3	3.0	2.3	3.2	2.3	3.4	2.2
	91	32.5	2.5	2.1	2.6	2.1	2.7	2.1	2.8	2.3	2.9	2.3	3.1	2.2	3.3	2.2
	95	35.0	2.4	2.0	2.5	2.1	2.7	2.1	2.8	2.2	2.9	2.2	3.1	2.2	3.3	2.2
	100	37.5	2.4	2.0	2.5	2.1	2.6	2.1	2.7	2.2	2.8	2.2	3.0	2.2	3.2	2.2
	104	40.0	2.4	2.0	2.4	2.1	2.6	2.1	2.7	2.2	2.8	2.2	3.0	2.2	3.2	2.1
	110	43.0	2.3	2.0	2.4	2.0	2.5	2.0	2.6	2.2	2.7	2.2	2.9	2.2	3.1	2.1
32 (3.6)	68	20.0	3.5	2.6	3.6	2.7	3.9	2.7	4.0	2.9	4.1	2.9	4.4	2.8	4.7	2.8
	73	22.5	3.4	2.6	3.5	2.7	3.8	2.7	3.9	2.8	4.1	2.8	4.4	2.8	4.6	2.8
	77	25.0	3.4	2.6	3.5	2.6	3.7	2.6	3.9	2.8	4.0	2.8	4.2	2.8	4.5	2.7
	82	27.5	3.3	2.5	3.4	2.6	3.7	2.6	3.8	2.8	3.9	2.8	4.2	2.7	4.5	2.7
	86	30.0	3.2	2.5	3.4	2.6	3.6	2.6	3.7	2.7	3.9	2.7	4.1	2.7	4.4	2.7
	91	32.5	3.2	2.5	3.3	2.6	3.5	2.5	3.7	2.7	3.8	2.7	4.0	2.7	4.3	2.6
	95	35.0	3.1	2.4	3.2	2.5	3.5	2.5	3.6	2.7	3.7	2.7	4.0	2.6	4.2	2.6
	100	37.5	3.1	2.4	3.2	2.5	3.4	2.5	3.5	2.7	3.7	2.6	3.9	2.6	4.1	2.6
	104	40.0	3.0	2.4	3.1	2.5	3.3	2.5	3.5	2.6	3.6	2.6	3.8	2.6	4.1	2.6
	110	43.0	3.0	2.4	3.0	2.4	3.2	2.4	3.4	2.6	3.5	2.6	3.7	2.6	4.0	2.5
40 (4.5)	68	20.0	4.3	3.2	4.5	3.3	4.8	3.3	5.0	3.5	5.2	3.5	5.5	3.4	5.9	3.4
	73	22.5	4.3	3.1	4.4	3.3	4.7	3.2	4.9	3.4	5.1	3.4	5.4	3.4	5.8	3.3
	77	25.0	4.2	3.1	4.4	3.2	4.7	3.2	4.8	3.4	5.0	3.4	5.3	3.3	5.7	3.3
	82	27.5	4.1	3.1	4.3	3.2	4.6	3.2	4.7	3.4	4.9	3.3	5.2	3.3	5.6	3.3
	86	30.0	4.1	3.0	4.2	3.1	4.5	3.1	4.7	3.3	4.8	3.3	5.1	3.3	5.5	3.2
	91	32.5	4.0	3.0	4.1	3.1	4.4	3.1	4.6	3.3	4.7	3.3	5.0	3.2	5.4	3.2
	95	35.0	3.9	3.0	4.1	3.1	4.3	3.0	4.5	3.2	4.6	3.2	5.0	3.2	5.3	3.2
	100	37.5	3.8	2.9	4.0	3.0	4.3	3.0	4.4	3.2	4.6	3.2	4.9	3.2	5.2	3.1
	104	40.0	3.8	2.9	3.9	3.0	4.2	3.0	4.3	3.2	4.5	3.2	4.8	3.1	5.1	3.1
	110	43.0	3.7	2.9	3.8	2.9	4.1	2.9	4.2	3.1	4.4	3.1	4.7	3.1	5.0	3.0
50 (5.6)	68	20.0	5.4	3.9	5.6	4.0	6.0	4.0	6.2	4.2	6.4	4.2	6.9	4.2	7.3	4.1
	73	22.5	5.3	3.9	5.5	4.0	5.9	4.0	6.1	4.2	6.3	4.2	6.8	4.2	7.2	4.1
	77	25.0	5.3	3.8	5.4	3.9	5.8	3.9	6.0	4.1	6.2	4.1	6.6	4.1	7.1	4.0
	82	27.5	5.2	3.8	5.3	3.9	5.7	3.9	5.9	4.1	6.1	4.1	6.5	4.0	6.9	4.0
	86	30.0	5.0	3.7	5.2	3.8	5.6	3.8	5.8	4.0	6.0	4.0	6.4	4.0	6.8	4.0
	91	32.5	5.0	3.7	5.1	3.8	5.5	3.8	5.7	4.0	5.9	4.0	6.3	3.9	6.7	3.9
	95	35.0	4.9	3.6	5.0	3.7	5.4	3.7	5.6	4.0	5.8	3.9	6.2	3.9	6.6	3.9
	100	37.5	4.8	3.6	5.0	3.7	5.3	3.7	5.5	3.9	5.7	3.9	6.0	3.9	6.4	3.8
	104	40.0	4.7	3.5	4.8	3.6	5.2	3.6	5.4	3.9	5.6	3.9	5.9	3.8	6.3	3.8
	110	43.0	4.6	3.5	4.7	3.6	5.0	3.6	5.2	3.8	5.4	3.8	5.8	3.8	6.2	3.7
63 (7.1)	68	20.0	6.9	4.9	7.1	5.1	7.6	5.1	7.9	5.4	8.2	5.3	8.7	5.3	9.3	5.2
	73	22.5	6.7	4.9	7.0	5.0	7.5	5.0	7.8	5.3	8.0	5.3	8.6	5.2	9.1	5.2
	77	25.0	6.7	4.8	6.9	5.0	7.4	5.0	7.6	5.2	7.9	5.2	8.4	5.2	8.9	5.1
	82	27.5	6.5	4.8	6.7	4.9	7.2	4.9	7.5	5.2	7.7	5.2	8.3	5.1	8.8	5.0
	86	30.0	6.4	4.7	6.6	4.9	7.1	4.8	7.3	5.1	7.6	5.1	8.1	5.0	8.7	5.0
	91	32.5	6.3	4.6	6.5	4.8	7.0	4.8	7.2	5.1	7.5	5.0	8.0	5.0	8.5	4.9
	95	35.0	6.2	4.6	6.4	4.7	6.8	4.7	7.1	5.0	7.3	5.0	7.8	4.9	8.3	4.9
	100	37.5	6.1	4.5	6.3	4.7	6.7	4.7	7.0	4.9	7.2	4.9	7.7	4.9	8.2	4.8
	104	40.0	6.0	4.5	6.1	4.6	6.6	4.6	6.8	4.9	7.1	4.9	7.5	4.8	8.0	4.7
	110	43.0	5.8	4.4	6.0	4.5	6.4	4.5	6.6	4.8	6.9	4.8	7.3	4.7	7.8	4.7

kcal/h = kW x 860, Btu/h = kW x 3,412

CT

A5. Cooling capacity with PUHY-P850-1250YSHM/PUHY-EP850-900YSHM

PEFY-P-VMH-E

CA : Capacity(kW) SHC : Sensible Heat Capacity(kW)

Model size (Rated kW)	Outdoor air temp.		Indoor air temp.													
			71 ˚FDB / 59˚FWB		73˚FDB / 61˚FWB		77˚FDB / 64˚FWB		81˚FDB / 66˚FWB		82˚FDB / 68˚FWB		86˚FDB / 72˚FWB		90˚FDB / 75˚FWB	
			21.5˚CDB / 15˚CWB		23˚CDB / 16˚CWB		25˚CDB / 18˚CWB		27˚CDB / 19˚CWB		28˚CDB / 20˚CWB		30˚CDB / 22˚CWB		32˚CDB / 24˚CWB	
	˚FDB	˚CDB	CA	SHC	CA	SHC	CA	SHC	CA	SHC	CA	SHC	CA	SHC	CA	SHC
40 (4.5)	68	20.0	4.3	3.2	4.4	3.3	4.7	3.3	4.8	3.5	5.0	3.5	5.3	3.5	5.6	3.4
	73	22.5	4.2	3.2	4.3	3.3	4.6	3.3	4.8	3.5	4.9	3.5	5.3	3.5	5.6	3.4
	77	25.0	4.2	3.2	4.3	3.3	4.6	3.3	4.7	3.5	4.9	3.5	5.2	3.4	5.5	3.4
	82	27.5	4.1	3.2	4.2	3.3	4.5	3.2	4.7	3.5	4.8	3.4	5.2	3.4	5.5	3.4
	86	30.0	4.1	3.2	4.2	3.2	4.5	3.2	4.6	3.4	4.8	3.4	5.1	3.4	5.4	3.3
	91	32.5	4.0	3.1	4.1	3.2	4.4	3.2	4.6	3.4	4.7	3.4	5.1	3.4	5.4	3.3
	95	35.0	4.0	3.1	4.1	3.2	4.4	3.2	4.5	3.4	4.7	3.4	5.0	3.4	5.3	3.3
	100	37.5	3.9	3.1	4.0	3.2	4.3	3.2	4.5	3.4	4.6	3.4	5.0	3.3	5.3	3.3
	104	40.0	3.9	3.1	4.0	3.1	4.3	3.1	4.4	3.3	4.6	3.3	4.9	3.3	5.2	3.3
	110	43.0	3.8	3.0	3.9	3.1	4.2	3.1	4.4	3.3	4.5	3.3	4.9	3.3	5.2	3.3
50 (5.6)	68	20.0	5.3	3.8	5.4	3.9	5.8	3.9	6.0	4.1	6.2	4.1	6.6	4.0	7.0	4.0
	73	22.5	5.2	3.8	5.4	3.9	5.8	3.9	5.9	4.1	6.1	4.1	6.6	4.0	7.0	4.0
	77	25.0	5.2	3.7	5.3	3.8	5.7	3.8	5.9	4.0	6.1	4.0	6.5	4.0	6.9	3.9
	82	27.5	5.1	3.7	5.3	3.8	5.6	3.8	5.8	4.0	6.0	4.0	6.4	4.0	6.8	3.9
	86	30.0	5.1	3.7	5.2	3.8	5.6	3.8	5.8	4.0	5.9	4.0	6.4	3.9	6.7	3.9
	91	32.5	5.0	3.7	5.1	3.7	5.5	3.7	5.7	4.0	5.9	3.9	6.3	3.9	6.7	3.9
	95	35.0	5.0	3.6	5.1	3.7	5.4	3.7	5.6	3.9	5.8	3.9	6.3	3.9	6.7	3.8
	100	37.5	4.9	3.6	5.0	3.7	5.4	3.7	5.6	3.9	5.8	3.9	6.2	3.9	6.6	3.8
	104	40.0	4.8	3.6	4.9	3.6	5.3	3.6	5.5	3.9	5.7	3.9	6.1	3.8	6.5	3.8
	110	43.0	4.8	3.5	4.9	3.6	5.2	3.6	5.4	3.8	5.6	3.8	6.0	3.8	6.5	3.8
63 (7.1)	68	20.0	6.7	5.0	6.9	5.1	7.4	5.1	7.6	5.4	7.9	5.4	8.4	5.3	8.9	5.3
	73	22.5	6.6	5.0	6.8	5.1	7.3	5.1	7.5	5.4	7.8	5.4	8.3	5.3	8.8	5.2
	77	25.0	6.6	4.9	6.7	5.0	7.2	5.0	7.5	5.3	7.7	5.3	8.2	5.3	8.7	5.2
	82	27.5	6.5	4.9	6.7	5.0	7.1	5.0	7.4	5.3	7.6	5.3	8.2	5.2	8.7	5.2
	86	30.0	6.4	4.9	6.6	5.0	7.1	5.0	7.3	5.3	7.5	5.2	8.1	5.2	8.6	5.1
	91	32.5	6.4	4.8	6.5	4.9	7.0	4.9	7.2	5.2	7.5	5.2	8.0	5.2	8.5	5.1
	95	35.0	6.3	4.8	6.4	4.9	6.9	4.9	7.1	5.2	7.4	5.2	7.9	5.2	8.4	5.1
	100	37.5	6.2	4.7	6.3	4.9	6.8	4.8	7.0	5.2	7.3	5.2	7.8	5.1	8.4	5.1
	104	40.0	6.1	4.7	6.2	4.8	6.7	4.8	7.0	5.1	7.2	5.1	7.8	5.1	8.3	5.0
	110	43.0	6.1	4.7	6.2	4.8	6.6	4.8	6.9	5.1	7.2	5.1	7.7	5.1	8.2	5.0
71 (8.0)	68	20.0	7.6	5.6	7.8	5.7	8.3	5.7	8.6	6.0	8.9	6.0	9.4	5.9	10.0	5.9
	73	22.5	7.5	5.5	7.7	5.7	8.2	5.7	8.5	6.0	8.8	6.0	9.4	5.9	9.9	5.8
	77	25.0	7.4	5.5	7.6	5.6	8.1	5.6	8.4	6.0	8.7	5.9	9.3	5.9	9.9	5.8
	82	27.5	7.3	5.5	7.5	5.6	8.0	5.6	8.3	5.9	8.6	5.9	9.2	5.9	9.8	5.8
	86	30.0	7.2	5.4	7.4	5.5	7.9	5.5	8.2	5.9	8.5	5.9	9.1	5.8	9.6	5.7
	91	32.5	7.2	5.4	7.3	5.5	7.8	5.5	8.1	5.8	8.4	5.8	9.0	5.8	9.6	5.7
	95	35.0	7.1	5.3	7.2	5.5	7.8	5.5	8.0	5.8	8.3	5.8	8.9	5.8	9.5	5.7
	100	37.5	7.0	5.3	7.1	5.4	7.7	5.4	7.9	5.8	8.3	5.8	8.8	5.7	9.4	5.6
	104	40.0	6.9	5.3	7.0	5.4	7.6	5.4	7.8	5.7	8.2	5.7	8.7	5.7	9.3	5.6
	110	43.0	6.8	5.2	6.9	5.3	7.5	5.3	7.7	5.7	8.1	5.7	8.6	5.6	9.2	5.6
80 (9.0)	68	20.0	8.5	6.3	8.7	6.5	9.4	6.5	9.6	6.8	10.0	6.8	10.6	6.7	11.3	6.6
	73	22.5	8.4	6.3	8.6	6.4	9.3	6.4	9.6	6.8	9.9	6.8	10.5	6.7	11.2	6.6
	77	25.0	8.3	6.2	8.5	6.4	9.2	6.4	9.5	6.7	9.8	6.7	10.4	6.7	11.1	6.6
	82	27.5	8.2	6.2	8.4	6.3	9.0	6.3	9.4	6.7	9.7	6.7	10.4	6.6	11.0	6.5
	86	30.0	8.1	6.1	8.3	6.3	8.9	6.3	9.3	6.7	9.6	6.6	10.2	6.6	10.8	6.5
	91	32.5	8.1	6.1	8.2	6.2	8.8	6.2	9.2	6.6	9.5	6.6	10.1	6.5	10.8	6.5
	95	35.0	8.0	6.0	8.1	6.2	8.7	6.2	9.0	6.6	9.4	6.6	10.1	6.5	10.7	6.4
	100	37.5	7.9	6.0	8.0	6.1	8.6	6.1	8.9	6.5	9.3	6.5	9.9	6.5	10.6	6.4
	104	40.0	7.8	6.0	7.9	6.1	8.5	6.1	8.8	6.5	9.2	6.5	9.8	6.4	10.5	6.3
	110	43.0	7.7	5.9	7.8	6.0	8.4	6.0	8.7	6.4	9.1	6.4	9.7	6.4	10.4	6.3
100 (11.2)	68	20.0	10.6	8.5	10.9	8.8	11.6	8.7	12.0	9.3	12.4	9.3	13.2	9.2	14.0	9.0
	73	22.5	10.5	8.4	10.8	8.7	11.5	8.7	11.9	9.2	12.3	9.2	13.1	9.1	13.9	9.0
	77	25.0	10.4	8.4	10.6	8.6	11.4	8.6	11.8	9.2	12.2	9.2	13.0	9.1	13.8	9.0
	82	27.5	10.2	8.3	10.5	8.6	11.2	8.5	11.6	9.1	12.0	9.1	12.9	9.0	13.7	8.9
	86	30.0	10.1	8.3	10.4	8.5	11.1	8.5	11.5	9.1	11.9	9.1	12.7	9.0	13.5	8.9
	91	32.5	10.0	8.2	10.2	8.5	11.0	8.4	11.4	9.0	11.8	9.0	12.6	8.9	13.4	8.8
	95	35.0	9.9	8.2	10.1	8.4	10.9	8.4	11.2	9.0	11.7	9.0	12.5	8.9	13.3	8.8
	100	37.5	9.8	8.1	10.0	8.4	10.7	8.3	11.1	8.9	11.6	8.9	12.4	8.9	13.2	8.7
	104	40.0	9.7	8.1	9.9	8.3	10.6	8.3	11.0	8.9	11.4	8.9	12.2	8.8	13.0	8.7
	110	43.0	9.6	8.0	9.7	8.2	10.4	8.2	10.8	8.8	11.3	8.8	12.1	8.8	12.9	8.7
125 (14.0)	68	20.0	13.2	9.8	13.6	10.0	14.6	10.0	15.0	10.6	15.5	10.6	16.5	10.4	17.5	10.3
	73	22.5	13.1	9.7	13.4	10.0	14.4	9.9	14.9	10.5	15.4	10.5	16.4	10.4	17.4	10.2
	77	25.0	13.0	9.7	13.3	9.9	14.3	9.9	14.7	10.5	15.2	10.4	16.2	10.3	17.2	10.2
	82	27.5	12.8	9.6	13.1	9.8	14.0	9.8	14.6	10.4	15.1	10.4	16.1	10.3	17.1	10.1
	86	30.0	12.7	9.5	13.0	9.7	13.9	9.7	14.4	10.3	14.9	10.3	15.9	10.2	16.9	10.0
	91	32.5	12.5	9.4	12.8	9.7	13.7	9.6	14.2	10.2	14.7	10.2	15.8	10.1	16.8	10.0
	95	35.0	12.4	9.4	12.6	9.6	13.6	9.6	14.0	10.2	14.6	10.2	15.7	10.1	16.6	10.0
	100	37.5	12.3	9.3	12.5	9.5	13.4	9.5	13.9	10.1	14.4	10.1	15.5	10.0	16.5	9.9
	104	40.0	12.1	9.2	12.3	9.4	13.2	9.4	13.7	10.0	14.3	10.0	15.3	10.0	16.3	9.8
	110	43.0	12.0	9.2	12.2	9.4	13.1	9.3	13.6	10.0	14.1	10.0	15.1	9.9	16.1	9.8

kcal/h = kW x 860, Btu/h = kW x 3,412

A5. Cooling capacity with PUHY-P850-1250YSHM/PUHY-EP850-900YSHM

PEFY-P-VMH-E

CA : Capacity(kW) SHC : Sensible Heat Capacity(kW)

Model size (Rated kW)	Outdoor air temp.		Indoor air temp.													
			71 ˚FDB / 59˚FWB		73˚FDB / 61˚FWB		77˚FDB / 64˚FWB		81˚FDB / 66˚FWB		82˚FDB / 68˚FWB		86˚FDB / 72˚FWB		90˚FDB / 75˚FWB	
			21.5˚CDB / 15˚CWB		23˚CDB / 16˚CWB		25˚CDB / 18˚CWB		27˚CDB / 19˚CWB		28˚CDB / 20˚CWB		30˚CDB / 22˚CWB		32˚CDB / 24˚CWB	
	˚FDB	˚CDB	CA	SHC	CA	SHC	CA	SHC	CA	SHC	CA	SHC	CA	SHC	CA	SHC
140 (16.0)	68	20.0	15.1	11.2	15.5	11.5	16.6	11.4	17.2	12.1	17.8	12.1	18.9	11.9	20.0	11.8
	73	22.5	15.0	11.1	15.4	11.4	16.4	11.4	17.0	12.0	17.6	12.0	18.7	11.9	19.9	11.7
	77	25.0	14.8	11.0	15.2	11.3	16.3	11.3	16.8	11.9	17.4	11.9	18.6	11.8	19.7	11.6
	82	27.5	14.6	11.0	15.0	11.2	16.0	11.2	16.6	11.9	17.2	11.8	18.4	11.7	19.5	11.6
	86	30.0	14.5	10.9	14.8	11.1	15.9	11.1	16.4	11.8	17.0	11.7	18.2	11.7	19.3	11.5
	91	32.5	14.3	10.8	14.6	11.1	15.7	11.0	16.3	11.7	16.8	11.7	18.0	11.6	19.2	11.4
	95	35.0	14.2	10.7	14.4	11.0	15.5	10.9	16.0	11.6	16.7	11.6	17.9	11.5	19.0	11.4
	100	37.5	14.0	10.6	14.3	10.9	15.3	10.9	15.9	11.5	16.5	11.5	17.7	11.5	18.8	11.3
	104	40.0	13.8	10.6	14.1	10.8	15.1	10.8	15.7	11.5	16.3	11.5	17.5	11.4	18.6	11.2
	110	43.0	13.7	10.5	13.9	10.7	14.9	10.7	15.5	11.4	16.1	11.4	17.3	11.3	18.4	11.2
200 (22.4)	68	20.0	21.2	16.0	21.7	16.5	23.3	16.4	24.0	17.4	24.9	17.4	26.4	17.1	28.1	16.9
	73	22.5	20.9	15.9	21.5	16.4	23.0	16.3	23.8	17.3	24.6	17.2	26.2	17.1	27.8	16.8
	77	25.0	20.7	15.8	21.2	16.2	22.8	16.2	23.5	17.2	24.4	17.2	26.0	17.0	27.6	16.7
	82	27.5	20.5	15.7	21.0	16.1	22.4	16.0	23.3	17.1	24.1	17.0	25.8	16.9	27.3	16.6
	86	30.0	20.3	15.6	20.7	16.0	22.2	15.9	23.0	17.0	23.8	16.9	25.5	16.8	27.0	16.5
	91	32.5	20.0	15.5	20.5	15.9	22.0	15.8	22.8	16.9	23.6	16.8	25.2	16.7	26.9	16.5
	95	35.0	19.8	15.4	20.2	15.8	21.7	15.7	22.4	16.8	23.3	16.7	25.0	16.6	26.6	16.4
	100	37.5	19.6	15.3	20.0	15.6	21.5	15.6	22.2	16.6	23.1	16.6	24.8	16.5	26.4	16.3
	104	40.0	19.4	15.2	19.7	15.5	21.2	15.5	22.0	16.5	22.8	16.5	24.5	16.4	26.1	16.2
	110	43.0	19.2	15.1	19.4	15.4	20.9	15.4	21.7	16.4	22.6	16.4	24.2	16.3	25.8	16.1
250 (28.0)	68	20.0	26.5	19.9	27.2	20.5	29.1	20.4	30.0	21.6	31.1	21.6	33.0	21.3	35.1	21.0
	73	22.5	26.2	19.8	26.9	20.3	28.8	20.3	29.7	21.5	30.7	21.4	32.8	21.2	34.8	20.9
	77	25.0	25.9	19.7	26.5	20.2	28.5	20.1	29.4	21.4	30.5	21.3	32.5	21.1	34.5	20.8
	82	27.5	25.6	19.5	26.3	20.0	28.1	19.9	29.1	21.2	30.1	21.2	32.2	21.0	34.2	20.7
	86	30.0	25.3	19.4	25.9	19.9	27.8	19.8	28.8	21.1	29.7	21.0	31.9	20.9	33.7	20.5
	91	32.5	25.1	19.3	25.6	19.7	27.4	19.7	28.5	21.0	29.5	20.9	31.6	20.7	33.6	20.5
	95	35.0	24.8	19.1	25.3	19.6	27.2	19.5	28.0	20.8	29.2	20.8	31.3	20.6	33.3	20.4
	100	37.5	24.5	19.0	25.0	19.4	26.8	19.4	27.8	20.7	28.9	20.7	30.9	20.5	33.0	20.2
	104	40.0	24.2	18.8	24.6	19.3	26.5	19.2	27.4	20.5	28.6	20.5	30.6	20.4	32.6	20.1
	110	43.0	23.9	18.7	24.3	19.1	26.1	19.1	27.1	20.4	28.2	20.4	30.2	20.2	32.3	20.0

kcal/h = kW x 860, Btu/h = kW x 3,412

CT

A5. Cooling capacity with PUHY-P850-1250YSHM/PUHY-EP850-900YSHM

PEFY-P-VMR-E-L/R

CA : Capacity(kW) SHC : Sensible Heat Capacity(kW)

Model size (Rated kW)	Outdoor air temp.		Indoor air temp.													
			71 ˚FDB / 59˚FWB		73˚FDB / 61˚FWB		77˚FDB / 64˚FWB		81˚FDB / 66˚FWB		82˚FDB / 68˚FWB		86˚FDB / 72˚FWB		90˚FDB / 75˚FWB	
			21.5˚CDB / 15˚CWB		23˚CDB / 16˚CWB		25˚CDB / 18˚CWB		27˚CDB / 19˚CWB		28˚CDB / 20˚CWB		30˚CDB / 22˚CWB		32˚CDB / 24˚CWB	
	˚FDB	˚CDB	CA	SHC	CA	SHC	CA	SHC	CA	SHC	CA	SHC	CA	SHC	CA	SHC
20 (2.2)	68	20.0	2.1	1.7	2.1	1.8	2.3	1.8	2.4	1.9	2.4	1.9	2.6	1.8	2.8	1.8
	73	22.5	2.1	1.7	2.1	1.8	2.3	1.7	2.3	1.9	2.4	1.9	2.6	1.8	2.7	1.8
	77	25.0	2.0	1.7	2.1	1.7	2.2	1.7	2.3	1.9	2.4	1.9	2.6	1.8	2.7	1.8
	82	27.5	2.0	1.7	2.1	1.7	2.2	1.7	2.3	1.8	2.4	1.8	2.5	1.8	2.7	1.8
	86	30.0	2.0	1.7	2.0	1.7	2.2	1.7	2.3	1.8	2.3	1.8	2.5	1.8	2.7	1.8
	91	32.5	2.0	1.7	2.0	1.7	2.2	1.7	2.2	1.8	2.3	1.8	2.5	1.8	2.6	1.8
	95	35.0	1.9	1.6	2.0	1.7	2.1	1.7	2.2	1.8	2.3	1.8	2.5	1.8	2.6	1.8
	100	37.5	1.9	1.6	2.0	1.7	2.1	1.7	2.2	1.8	2.3	1.8	2.4	1.8	2.6	1.8
	104	40.0	1.9	1.6	1.9	1.7	2.1	1.7	2.2	1.8	2.2	1.8	2.4	1.8	2.6	1.8
	110	43.0	1.9	1.6	1.9	1.7	2.1	1.7	2.1	1.8	2.2	1.8	2.4	1.8	2.5	1.7
25 (2.8)	68	20.0	2.6	2.0	2.7	2.0	2.9	2.0	3.0	2.1	3.1	2.1	3.3	2.1	3.5	2.1
	73	22.5	2.6	2.0	2.7	2.0	2.9	2.0	3.0	2.1	3.1	2.1	3.3	2.1	3.5	2.1
	77	25.0	2.6	2.0	2.7	2.0	2.9	2.0	2.9	2.1	3.0	2.1	3.2	2.1	3.4	2.1
	82	27.5	2.6	1.9	2.6	2.0	2.8	2.0	2.9	2.1	3.0	2.1	3.2	2.1	3.4	2.1
	86	30.0	2.5	1.9	2.6	2.0	2.8	2.0	2.9	2.1	3.0	2.1	3.2	2.1	3.4	2.0
	91	32.5	2.5	1.9	2.6	2.0	2.7	2.0	2.8	2.1	2.9	2.1	3.2	2.1	3.4	2.0
	95	35.0	2.5	1.9	2.5	1.9	2.7	1.9	2.8	2.1	2.9	2.1	3.1	2.0	3.3	2.0
	100	37.5	2.5	1.9	2.5	1.9	2.7	1.9	2.8	2.0	2.9	2.0	3.1	2.0	3.3	2.0
	104	40.0	2.4	1.9	2.5	1.9	2.6	1.9	2.7	2.0	2.9	2.0	3.1	2.0	3.3	2.0
	110	43.0	2.4	1.9	2.4	1.9	2.6	1.9	2.7	2.0	2.8	2.0	3.0	2.0	3.2	2.0
32 (3.6)	68	20.0	3.4	2.4	3.5	2.5	3.7	2.5	3.9	2.6	4.0	2.6	4.2	2.6	4.5	2.5
	73	22.5	3.4	2.4	3.5	2.5	3.7	2.5	3.8	2.6	4.0	2.6	4.2	2.6	4.5	2.5
	77	25.0	3.3	2.4	3.4	2.4	3.7	2.4	3.8	2.6	3.9	2.6	4.2	2.5	4.4	2.5
	82	27.5	3.3	2.4	3.4	2.4	3.6	2.4	3.7	2.6	3.9	2.5	4.1	2.5	4.4	2.5
	86	30.0	3.3	2.4	3.3	2.4	3.6	2.4	3.7	2.5	3.8	2.5	4.1	2.5	4.3	2.5
	91	32.5	3.2	2.3	3.3	2.4	3.5	2.4	3.7	2.5	3.8	2.5	4.1	2.5	4.3	2.5
	95	35.0	3.2	2.3	3.3	2.4	3.5	2.4	3.6	2.5	3.8	2.5	4.0	2.5	4.3	2.4
	100	37.5	3.2	2.3	3.2	2.3	3.4	2.3	3.6	2.5	3.7	2.5	4.0	2.5	4.2	2.4
	104	40.0	3.1	2.3	3.2	2.3	3.4	2.3	3.5	2.5	3.7	2.5	3.9	2.4	4.2	2.4
	110	43.0	3.1	2.3	3.1	2.3	3.4	2.3	3.5	2.4	3.6	2.4	3.9	2.4	4.2	2.4

kcal/h = kW x 860, Btu/h = kW x 3,412

A5. Cooling capacity with PUHY-P850-1250YSHM/PUHY-EP850-900YSHM

PEFY-P-VMS1(L)-E

CA : Capacity(kW) SHC : Sensible Heat Capacity(kW)

Model size (Rated kW)	Outdoor air temp.		Indoor air temp.													
			71 ˚FDB / 59˚FWB		73˚FDB / 61˚FWB		77˚FDB / 64˚FWB		81˚FDB / 66˚FWB		82˚FDB / 68˚FWB		86˚FDB / 72˚FWB		90˚FDB / 75˚FWB	
			21.5˚CDB / 15˚CWB		23˚CDB / 16˚CWB		25˚CDB / 18˚CWB		27˚CDB / 19˚CWB		28˚CDB / 20˚CWB		30˚CDB / 22˚CWB		32˚CDB / 24˚CWB	
	˚FDB	˚CDB	CA	SHC	CA	SHC	CA	SHC	CA	SHC	CA	SHC	CA	SHC	CA	SHC
15 (1.7)	68	20.0	1.6	1.5	1.6	1.5	1.8	1.5	1.8	1.6	1.9	1.6	2.0	1.6	2.1	1.6
	73	22.5	1.6	1.5	1.6	1.5	1.7	1.5	1.8	1.6	1.9	1.6	2.0	1.6	2.1	1.6
	77	25.0	1.6	1.5	1.6	1.5	1.7	1.5	1.8	1.6	1.8	1.6	2.0	1.6	2.1	1.6
	82	27.5	1.6	1.4	1.6	1.5	1.7	1.5	1.8	1.6	1.8	1.6	2.0	1.6	2.1	1.6
	86	30.0	1.5	1.4	1.6	1.5	1.7	1.5	1.7	1.6	1.8	1.6	1.9	1.6	2.0	1.6
	91	32.5	1.5	1.4	1.6	1.5	1.7	1.5	1.7	1.6	1.8	1.6	1.9	1.6	2.0	1.6
	95	35.0	1.5	1.4	1.5	1.5	1.6	1.5	1.7	1.6	1.8	1.6	1.9	1.6	2.0	1.6
	100	37.5	1.5	1.4	1.5	1.5	1.6	1.5	1.7	1.6	1.8	1.6	1.9	1.6	2.0	1.5
	104	40.0	1.5	1.4	1.5	1.5	1.6	1.4	1.7	1.6	1.7	1.6	1.9	1.6	2.0	1.5
	110	43.0	1.5	1.4	1.5	1.4	1.6	1.4	1.6	1.6	1.7	1.6	1.8	1.5	2.0	1.5
20 (2.2)	68	20.0	2.1	1.8	2.1	1.8	2.3	1.8	2.4	2.0	2.4	2.0	2.6	1.9	2.8	1.9
	73	22.5	2.1	1.8	2.1	1.8	2.3	1.8	2.3	2.0	2.4	1.9	2.6	1.9	2.7	1.9
	77	25.0	2.0	1.8	2.1	1.8	2.2	1.8	2.3	1.9	2.4	1.9	2.6	1.9	2.7	1.9
	82	27.5	2.0	1.7	2.1	1.8	2.2	1.8	2.3	1.9	2.4	1.9	2.5	1.9	2.7	1.9
	86	30.0	2.0	1.7	2.0	1.8	2.2	1.8	2.3	1.9	2.3	1.9	2.5	1.9	2.7	1.9
	91	32.5	2.0	1.7	2.0	1.8	2.2	1.8	2.2	1.9	2.3	1.9	2.5	1.9	2.6	1.9
	95	35.0	1.9	1.7	2.0	1.8	2.1	1.8	2.2	1.9	2.3	1.9	2.5	1.9	2.6	1.9
	100	37.5	1.9	1.7	2.0	1.8	2.1	1.8	2.2	1.9	2.3	1.9	2.4	1.9	2.6	1.9
	104	40.0	1.9	1.7	1.9	1.7	2.1	1.7	2.2	1.9	2.2	1.9	2.4	1.9	2.6	1.8
	110	43.0	1.9	1.7	1.9	1.7	2.1	1.7	2.1	1.9	2.2	1.9	2.4	1.9	2.5	1.8
25 (2.8)	68	20.0	2.6	2.1	2.7	2.2	2.9	2.2	3.0	2.3	3.1	2.3	3.3	2.3	3.5	2.3
	73	22.5	2.6	2.1	2.7	2.2	2.9	2.2	3.0	2.3	3.1	2.3	3.3	2.3	3.5	2.3
	77	25.0	2.6	2.1	2.7	2.2	2.9	2.2	2.9	2.3	3.0	2.3	3.2	2.3	3.4	2.2
	82	27.5	2.6	2.1	2.6	2.2	2.8	2.1	2.9	2.3	3.0	2.3	3.2	2.3	3.4	2.2
	86	30.0	2.5	2.1	2.6	2.1	2.8	2.1	2.9	2.3	3.0	2.3	3.2	2.3	3.4	2.2
	91	32.5	2.5	2.1	2.6	2.1	2.7	2.1	2.8	2.3	2.9	2.3	3.2	2.2	3.4	2.2
	95	35.0	2.5	2.1	2.5	2.1	2.7	2.1	2.8	2.3	2.9	2.2	3.1	2.2	3.3	2.2
	100	37.5	2.5	2.0	2.5	2.1	2.7	2.1	2.8	2.2	2.9	2.2	3.1	2.2	3.3	2.2
	104	40.0	2.4	2.0	2.5	2.1	2.6	2.1	2.7	2.2	2.9	2.2	3.1	2.2	3.3	2.2
	110	43.0	2.4	2.0	2.4	2.1	2.6	2.1	2.7	2.2	2.8	2.2	3.0	2.2	3.2	2.2
32 (3.6)	68	20.0	3.4	2.6	3.5	2.6	3.7	2.6	3.9	2.8	4.0	2.8	4.2	2.8	4.5	2.7
	73	22.5	3.4	2.6	3.5	2.6	3.7	2.6	3.8	2.8	4.0	2.8	4.2	2.7	4.5	2.7
	77	25.0	3.3	2.5	3.4	2.6	3.7	2.6	3.8	2.8	3.9	2.8	4.2	2.7	4.4	2.7
	82	27.5	3.3	2.5	3.4	2.6	3.6	2.6	3.7	2.7	3.9	2.7	4.1	2.7	4.4	2.7
	86	30.0	3.3	2.5	3.3	2.6	3.6	2.6	3.7	2.7	3.8	2.7	4.1	2.7	4.3	2.7
	91	32.5	3.2	2.5	3.3	2.6	3.5	2.5	3.7	2.7	3.8	2.7	4.1	2.7	4.3	2.6
	95	35.0	3.2	2.5	3.3	2.5	3.5	2.5	3.6	2.7	3.8	2.7	4.0	2.7	4.3	2.6
	100	37.5	3.2	2.5	3.2	2.5	3.4	2.5	3.6	2.7	3.7	2.7	4.0	2.7	4.2	2.6
	104	40.0	3.1	2.4	3.2	2.5	3.4	2.5	3.5	2.7	3.7	2.7	3.9	2.6	4.2	2.6
	110	43.0	3.1	2.4	3.1	2.5	3.4	2.5	3.5	2.6	3.6	2.6	3.9	2.6	4.2	2.6
40 (4.5)	68	20.0	4.3	3.1	4.4	3.2	4.7	3.2	4.8	3.4	5.0	3.4	5.3	3.3	5.6	3.3
	73	22.5	4.2	3.1	4.3	3.2	4.6	3.2	4.8	3.4	4.9	3.4	5.3	3.3	5.6	3.3
	77	25.0	4.2	3.1	4.3	3.2	4.6	3.2	4.7	3.3	4.9	3.3	5.2	3.3	5.5	3.3
	82	27.5	4.1	3.1	4.2	3.1	4.5	3.1	4.7	3.3	4.8	3.3	5.2	3.3	5.5	3.2
	86	30.0	4.1	3.0	4.2	3.1	4.5	3.1	4.6	3.3	4.8	3.3	5.1	3.3	5.4	3.2
	91	32.5	4.0	3.0	4.1	3.1	4.4	3.1	4.6	3.3	4.7	3.3	5.1	3.2	5.4	3.2
	95	35.0	4.0	3.0	4.1	3.1	4.4	3.1	4.5	3.3	4.7	3.3	5.0	3.2	5.3	3.2
	100	37.5	3.9	3.0	4.0	3.0	4.3	3.0	4.5	3.2	4.6	3.2	5.0	3.2	5.3	3.2
	104	40.0	3.9	3.0	4.0	3.0	4.3	3.0	4.4	3.2	4.6	3.2	4.9	3.2	5.2	3.1
	110	43.0	3.8	2.9	3.9	3.0	4.2	3.0	4.4	3.2	4.5	3.2	4.9	3.2	5.2	3.1
50 (5.6)	68	20.0	5.3	3.8	5.4	3.9	5.8	3.9	6.0	4.1	6.2	4.1	6.6	4.1	7.0	4.0
	73	22.5	5.2	3.8	5.4	3.9	5.8	3.9	5.9	4.1	6.1	4.1	6.6	4.1	7.0	4.0
	77	25.0	5.2	3.8	5.3	3.9	5.7	3.9	5.9	4.1	6.1	4.1	6.5	4.0	6.9	4.0
	82	27.5	5.1	3.8	5.3	3.8	5.6	3.8	5.8	4.1	6.0	4.0	6.4	4.0	6.8	4.0
	86	30.0	5.1	3.7	5.2	3.8	5.6	3.8	5.8	4.0	5.9	4.0	6.4	4.0	6.7	3.9
	91	32.5	5.0	3.7	5.1	3.8	5.5	3.8	5.7	4.0	5.9	4.0	6.3	4.0	6.7	3.9
	95	35.0	5.0	3.7	5.1	3.8	5.4	3.7	5.6	4.0	5.8	4.0	6.3	3.9	6.7	3.9
	100	37.5	4.9	3.6	5.0	3.7	5.4	3.7	5.6	3.9	5.8	3.9	6.2	3.9	6.6	3.9
	104	40.0	4.8	3.6	4.9	3.7	5.3	3.7	5.5	3.9	5.7	3.9	6.1	3.9	6.5	3.8
	110	43.0	4.8	3.6	4.9	3.7	5.2	3.7	5.4	3.9	5.6	3.9	6.0	3.9	6.5	3.8
63 (7.1)	68	20.0	6.7	4.9	6.9	5.0	7.4	5.0	7.6	5.2	7.9	5.2	8.4	5.2	8.9	5.1
	73	22.5	6.6	4.8	6.8	4.9	7.3	4.9	7.5	5.2	7.8	5.2	8.3	5.1	8.8	5.1
	77	25.0	6.6	4.8	6.7	4.9	7.2	4.9	7.5	5.2	7.7	5.2	8.2	5.1	8.7	5.0
	82	27.5	6.5	4.7	6.7	4.9	7.1	4.8	7.4	5.1	7.6	5.1	8.2	5.1	8.7	5.0
	86	30.0	6.4	4.7	6.6	4.8	7.1	4.8	7.3	5.1	7.5	5.1	8.1	5.0	8.6	5.0
	91	32.5	6.4	4.7	6.5	4.8	7.0	4.8	7.2	5.1	7.5	5.0	8.0	5.0	8.5	4.9
	95	35.0	6.3	4.6	6.4	4.7	6.9	4.7	7.1	5.0	7.4	5.0	7.9	5.0	8.4	4.9
	100	37.5	6.2	4.6	6.3	4.7	6.8	4.7	7.0	5.0	7.3	5.0	7.8	4.9	8.4	4.9
	104	40.0	6.1	4.6	6.2	4.7	6.7	4.7	7.0	4.9	7.2	4.9	7.8	4.9	8.3	4.8
	110	43.0	6.1	4.5	6.2	4.6	6.6	4.6	6.9	4.9	7.2	4.9	7.7	4.9	8.2	4.8

kcal/h = kW x 860, Btu/h = kW x 3,412

CT

A6. Cooling capacity with PUHY-HP200-500Y(S)HM

PEFY-P-VMH-E

CA : Capacity(kW) SHC : Sensible Heat Capacity(kW)

Model size (Rated kW)	Outdoor air temp.		Indoor air temp..													
			71˚FDB/59˚FWB		73˚FDB/61˚FWB		77˚FDB/64˚FWB		81˚FDB/66˚FWB		82˚FDB/68˚FWB		86˚FDB/72˚FWB		90˚FDB/75˚FWB	
			21.5˚CDB/15˚CWB		23˚CDB/16˚CWB		25˚CDB/18˚CWB		27˚CDB/19˚CWB		28˚CDB/20˚CWB		30˚CDB/22˚CWB		32˚CDB/24˚CWB	
	˚FDB	˚CDB	CA	SHC	CA	SHC	CA	SHC	CA	SHC	CA	SHC	CA	SHC	CA	SHC
40 (4.5)	68	20.0	4.0	3.1	4.3	3.3	4.5	3.3	4.8	3.5	5.0	3.5	5.3	3.5	5.6	3.4
	73	22.5	4.0	3.1	4.3	3.3	4.5	3.3	4.8	3.5	5.0	3.5	5.3	3.5	5.6	3.4
	77	25.0	4.0	3.1	4.3	3.3	4.5	3.3	4.8	3.5	5.0	3.5	5.3	3.5	5.5	3.4
	82	27.5	4.0	3.1	4.2	3.3	4.5	3.2	4.7	3.5	4.9	3.5	5.1	3.4	5.4	3.3
	86	30.0	3.9	3.1	4.2	3.2	4.4	3.2	4.7	3.5	4.8	3.4	5.1	3.4	5.3	3.3
	91	32.5	3.9	3.1	4.1	3.2	4.4	3.2	4.6	3.4	4.7	3.4	5.0	3.3	5.2	3.3
	95	35.0	3.9	3.1	4.1	3.2	4.3	3.2	4.5	3.4	4.6	3.4	4.9	3.3	5.1	3.2
	100	37.5	3.9	3.1	4.0	3.2	4.2	3.1	4.4	3.4	4.5	3.3	4.8	3.3	5.0	3.2
	104	40.0	3.8	3.0	4.0	3.2	4.2	3.1	4.4	3.3	4.5	3.3	4.7	3.2	4.9	3.2
	110	43.0	3.8	3.0	3.9	3.1	4.1	3.1	4.3	3.3	4.4	3.3	4.5	3.2	4.7	3.1
50 (5.6)	68	20.0	4.9	3.6	5.3	3.8	5.6	3.8	6.0	4.1	6.2	4.1	6.6	4.0	7.0	4.0
	73	22.5	4.9	3.6	5.3	3.8	5.6	3.8	6.0	4.1	6.2	4.1	6.6	4.0	7.0	4.0
	77	25.0	4.9	3.6	5.3	3.8	5.6	3.8	6.0	4.1	6.2	4.1	6.5	4.0	6.9	3.9
	82	27.5	4.9	3.6	5.3	3.8	5.6	3.8	5.9	4.0	6.1	4.0	6.4	3.9	6.7	3.9
	86	30.0	4.9	3.6	5.2	3.8	5.5	3.7	5.8	4.0	6.0	4.0	6.3	3.9	6.6	3.8
	91	32.5	4.9	3.6	5.1	3.7	5.4	3.7	5.7	4.0	5.9	3.9	6.2	3.9	6.4	3.8
	95	35.0	4.8	3.6	5.1	3.7	5.4	3.7	5.6	3.9	5.8	3.9	6.1	3.8	6.3	3.7
	100	37.5	4.8	3.6	5.0	3.7	5.3	3.6	5.5	3.9	5.7	3.8	5.9	3.8	6.2	3.7
	104	40.0	4.8	3.5	5.0	3.7	5.2	3.6	5.4	3.8	5.6	3.8	5.8	3.7	6.1	3.6
	110	43.0	4.7	3.5	4.9	3.6	5.1	3.6	5.3	3.8	5.4	3.7	5.7	3.7	5.9	3.6
63 (7.1)	68	20.0	6.3	4.8	6.7	5.0	7.2	5.0	7.6	5.4	7.9	5.4	8.4	5.3	8.8	5.2
	73	22.5	6.3	4.8	6.7	5.0	7.2	5.0	7.6	5.4	7.9	5.4	8.4	5.3	8.8	5.2
	77	25.0	6.3	4.8	6.7	5.0	7.2	5.0	7.6	5.4	7.8	5.4	8.3	5.3	8.7	5.2
	82	27.5	6.2	4.8	6.7	5.0	7.1	5.0	7.5	5.3	7.7	5.3	8.1	5.2	8.5	5.1
	86	30.0	6.2	4.7	6.6	5.0	7.0	4.9	7.4	5.3	7.6	5.3	8.0	5.2	8.4	5.1
	91	32.5	6.2	4.7	6.5	4.9	6.9	4.9	7.2	5.2	7.4	5.2	7.8	5.1	8.2	5.0
	95	35.0	6.1	4.7	6.4	4.9	6.8	4.8	7.1	5.2	7.3	5.2	7.7	5.1	8.0	4.9
	100	37.5	6.1	4.7	6.4	4.9	6.7	4.8	7.0	5.1	7.2	5.1	7.5	5.0	7.8	4.9
	104	40.0	6.1	4.7	6.3	4.8	6.6	4.8	6.9	5.1	7.1	5.0	7.4	4.9	7.7	4.8
	110	43.0	6.0	4.7	6.2	4.8	6.5	4.7	6.7	5.0	6.9	5.0	7.2	4.9	7.5	4.7
71 (8.0)	68	20.0	7.1	5.3	7.6	5.6	8.1	5.6	8.6	6.0	8.9	6.0	9.4	5.9	10.0	5.8
	73	22.5	7.1	5.3	7.6	5.6	8.1	5.6	8.6	6.0	8.9	6.0	9.4	5.9	10.0	5.8
	77	25.0	7.1	5.3	7.6	5.6	8.1	5.6	8.6	6.0	8.8	6.0	9.3	5.9	9.8	5.8
	82	27.5	7.0	5.3	7.5	5.6	8.0	5.6	8.4	6.0	8.7	5.9	9.1	5.8	9.6	5.7
	86	30.0	7.0	5.3	7.4	5.6	7.9	5.5	8.3	5.9	8.5	5.9	9.0	5.8	9.4	5.6
	91	32.5	6.9	5.3	7.3	5.5	7.8	5.5	8.1	5.8	8.4	5.8	8.8	5.7	9.2	5.6
	95	35.0	6.9	5.3	7.3	5.5	7.7	5.4	8.0	5.8	8.3	5.8	8.7	5.6	9.0	5.5
	100	37.5	6.9	5.2	7.2	5.4	7.5	5.4	7.9	5.7	8.1	5.7	8.5	5.6	8.8	5.4
	104	40.0	6.8	5.2	7.1	5.4	7.4	5.3	7.7	5.7	8.0	5.6	8.3	5.5	8.7	5.4
	110	43.0	6.8	5.2	7.0	5.3	7.3	5.2	7.6	5.6	7.8	5.5	8.1	5.4	8.4	5.3
80 (9.0)	68	20.0	7.9	6.0	8.5	6.4	9.1	6.3	9.6	6.8	10.0	6.8	10.6	6.7	11.2	6.6
	73	22.5	7.9	6.0	8.5	6.4	9.1	6.3	9.6	6.8	10.0	6.8	10.6	6.7	11.2	6.6
	77	25.0	7.9	6.0	8.5	6.4	9.1	6.3	9.6	6.8	10.0	6.8	10.5	6.7	11.0	6.5
	82	27.5	7.9	6.0	8.5	6.3	9.0	6.3	9.5	6.7	9.8	6.7	10.3	6.6	10.8	6.5
	86	30.0	7.9	6.0	8.4	6.3	8.9	6.2	9.3	6.7	9.6	6.7	10.1	6.5	10.6	6.4
	91	32.5	7.8	6.0	8.3	6.2	8.7	6.2	9.2	6.6	9.4	6.6	9.9	6.5	10.4	6.3
	95	35.0	7.8	6.0	8.2	6.2	8.6	6.1	9.0	6.6	9.3	6.5	9.7	6.4	10.2	6.2
	100	37.5	7.7	5.9	8.1	6.2	8.5	6.1	8.9	6.5	9.1	6.4	9.5	6.3	9.9	6.2
	104	40.0	7.7	5.9	8.0	6.1	8.4	6.0	8.7	6.4	9.0	6.4	9.4	6.2	9.7	6.1
	110	43.0	7.6	5.9	7.8	6.1	8.2	5.9	8.5	6.3	8.7	6.3	9.1	6.1	9.5	6.0
100 (11.2)	68	20.0	9.9	8.2	10.6	8.6	11.3	8.6	12.0	9.3	12.5	9.3	13.2	9.2	13.9	9.0
	73	22.5	9.9	8.2	10.6	8.6	11.3	8.6	12.0	9.3	12.5	9.3	13.2	9.2	13.9	9.0
	77	25.0	9.9	8.2	10.6	8.6	11.3	8.6	12.0	9.3	12.4	9.2	13.1	9.1	13.7	8.9
	82	27.5	9.8	8.2	10.5	8.6	11.2	8.5	11.8	9.2	12.2	9.2	12.8	9.0	13.4	8.8
	86	30.0	9.8	8.1	10.4	8.6	11.0	8.5	11.6	9.1	12.0	9.1	12.6	8.9	13.2	8.8
	91	32.5	9.7	8.1	10.3	8.5	10.9	8.4	11.4	9.0	11.7	9.0	12.3	8.8	12.9	8.7
	95	35.0	9.7	8.1	10.2	8.4	10.7	8.3	11.2	9.0	11.6	8.9	12.1	8.8	12.7	8.6
	100	37.5	9.6	8.0	10.0	8.4	10.6	8.3	11.0	8.9	11.3	8.8	11.8	8.7	12.4	8.5
	104	40.0	9.6	8.0	9.9	8.3	10.4	8.2	10.8	8.8	11.1	8.8	11.6	8.6	12.1	8.4
	110	43.0	9.5	8.0	9.8	8.3	10.2	8.1	10.6	8.7	10.9	8.7	11.3	8.5	11.8	8.3
125 (14.0)	68	20.0	12.3	9.4	13.3	9.9	14.1	9.8	15.0	10.6	15.6	10.6	16.5	10.4	17.4	10.2
	73	22.5	12.3	9.4	13.3	9.9	14.1	9.8	15.0	10.6	15.6	10.6	16.5	10.4	17.4	10.2
	77	25.0	12.3	9.4	13.3	9.9	14.1	9.8	15.0	10.6	15.5	10.5	16.3	10.4	17.2	10.1
	82	27.5	12.3	9.3	13.2	9.8	14.0	9.7	14.7	10.5	15.2	10.4	16.0	10.2	16.8	10.0
	86	30.0	12.2	9.3	13.0	9.8	13.8	9.7	14.5	10.4	15.0	10.3	15.7	10.1	16.5	9.9
	91	32.5	12.2	9.3	12.8	9.7	13.6	9.6	14.2	10.2	14.7	10.2	15.4	10.0	16.1	9.8
	95	35.0	12.1	9.2	12.7	9.6	13.4	9.5	14.0	10.2	14.4	10.1	15.1	9.9	15.8	9.7
	100	37.5	12.0	9.2	12.5	9.5	13.2	9.4	13.8	10.0	14.2	10.0	14.8	9.8	15.5	9.5
	104	40.0	12.0	9.2	12.4	9.5	13.0	9.3	13.6	10.0	13.9	9.9	14.5	9.7	15.2	9.4
	110	43.0	11.9	9.1	12.2	9.4	12.8	9.2	13.3	9.8	13.6	9.7	14.2	9.5	14.7	9.3

kcal/h =kWx860,Btu/h =kWx3,412

A6. Cooling capacity with PUHY-HP200-500Y(S)HM

PEFY-P-VMH-E

CA : Capacity(kW) SHC : Sensible Heat Capacity(kW)

Model size (Rated kW)	Outdoor air temp.		Indoor air temp.													
			71 ˚FDB / 59˚FWB		73˚FDB / 61˚FWB		77˚FDB / 64˚FWB		81˚FDB / 66˚FWB		82˚FDB / 68˚FWB		86˚FDB / 72˚FWB		90˚FDB / 75˚FWB	
			21.5˚CDB / 15˚CWB		23˚CDB / 16˚CWB		25˚CDB / 18˚CWB		27˚CDB / 19˚CWB		28˚CDB / 20˚CWB		30˚CDB / 22˚CWB		32˚CDB / 24˚CWB	
	˚FDB	˚CDB	CA	SHC	CA	SHC	CA	SHC	CA	SHC	CA	SHC	CA	SHC	CA	SHC
140 (16.0)	68	20.0	14.1	10.7	15.1	11.3	16.1	11.2	17.1	12.1	17.8	12.1	18.8	11.9	19.9	11.7
	73	22.5	14.1	10.7	15.1	11.3	16.1	11.2	17.1	12.1	17.8	12.1	18.8	11.9	19.9	11.7
	77	25.0	14.1	10.7	15.1	11.3	16.1	11.2	17.1	12.1	17.7	12.0	18.7	11.8	19.6	11.6
	82	27.5	14.1	10.7	15.0	11.2	16.0	11.1	16.8	12.0	17.4	11.9	18.3	11.7	19.2	11.4
	86	30.0	14.0	10.6	14.9	11.2	15.8	11.0	16.6	11.8	17.1	11.8	18.0	11.6	18.9	11.3
	91	32.5	13.9	10.6	14.7	11.1	15.5	10.9	16.3	11.7	16.8	11.7	17.6	11.4	18.4	11.2
	95	35.0	13.8	10.6	14.5	11.0	15.3	10.9	16.0	11.6	16.5	11.5	17.3	11.3	18.1	11.1
	100	37.5	13.7	10.5	14.3	10.9	15.1	10.7	15.7	11.5	16.2	11.4	16.9	11.2	17.7	10.9
	104	40.0	13.7	10.5	14.2	10.8	14.9	10.7	15.5	11.4	15.9	11.3	16.6	11.1	17.3	10.8
	110	43.0	13.6	10.4	13.9	10.7	14.6	10.5	15.1	11.2	15.5	11.1	16.2	10.9	16.8	10.6
200 (22.4)	68	20.0	19.7	15.3	21.2	16.2	22.6	16.1	24.0	17.4	24.9	17.4	26.4	17.1	27.9	16.8
	73	22.5	19.7	15.3	21.2	16.2	22.6	16.1	24.0	17.4	24.9	17.4	26.4	17.1	27.9	16.8
	77	25.0	19.7	15.3	21.2	16.2	22.6	16.1	23.9	17.4	24.8	17.3	26.1	17.0	27.5	16.7
	82	27.5	19.7	15.3	21.1	16.2	22.3	16.0	23.5	17.2	24.3	17.1	25.6	16.8	26.9	16.5
	86	30.0	19.6	15.3	20.8	16.0	22.1	15.9	23.2	17.1	23.9	17.0	25.2	16.7	26.4	16.3
	91	32.5	19.5	15.2	20.6	15.9	21.7	15.7	22.8	16.9	23.5	16.8	24.7	16.5	25.8	16.1
	95	35.0	19.4	15.2	20.3	15.8	21.4	15.6	22.4	16.7	23.1	16.6	24.2	16.3	25.3	15.9
	100	37.5	19.2	15.1	20.1	15.7	21.1	15.4	22.0	16.6	22.6	16.4	23.7	16.1	24.7	15.7
	104	40.0	19.1	15.0	19.8	15.6	20.8	15.3	21.7	16.4	22.3	16.3	23.3	16.0	24.3	15.6
	110	43.0	19.0	15.0	19.5	15.4	20.4	15.2	21.2	16.2	21.7	16.1	22.6	15.7	23.6	15.3
250 (28.0)	68	20.0	24.7	19.1	26.5	20.2	28.2	20.0	30.0	21.6	31.2	21.6	33.0	21.3	34.9	20.9
	73	22.5	24.7	19.1	26.5	20.2	28.2	20.0	30.0	21.6	31.2	21.6	33.0	21.3	34.9	20.9
	77	25.0	24.7	19.1	26.5	20.2	28.2	20.0	29.9	21.6	31.0	21.5	32.7	21.2	34.3	20.7
	82	27.5	24.6	19.0	26.3	20.1	27.9	19.9	29.4	21.4	30.4	21.3	32.0	20.9	33.6	20.5
	86	30.0	24.5	19.0	26.0	19.9	27.6	19.7	29.0	21.2	29.9	21.1	31.5	20.7	33.0	20.3
	91	32.5	24.3	18.9	25.7	19.8	27.1	19.5	28.5	21.0	29.3	20.8	30.8	20.5	32.2	20.0
	95	35.0	24.2	18.8	25.4	19.7	26.8	19.4	28.1	20.8	28.9	20.7	30.3	20.3	31.7	19.8
	100	37.5	24.0	18.8	25.1	19.5	26.4	19.2	27.5	20.6	28.3	20.4	29.6	20.0	30.9	19.5
	104	40.0	23.9	18.7	24.8	19.4	26.0	19.0	27.1	20.4	27.8	20.2	29.1	19.8	30.3	19.3
	110	43.0	23.7	18.6	24.4	19.2	25.5	18.8	26.5	20.1	27.2	20.0	28.3	19.5	29.4	19.0

kcal/h = kW x 860, Btu/h = kW x 3,412

CT

A6. Cooling capacity with PUHY-HP200-500Y(S)HM

PEFY-P-VMR-E-L/R

CA : Capacity(kW) SHC : Sensible Heat Capacity(kW)

Model size (Rated kW)	Outdoor air temp.		Indoor air temp.													
			71 ˚FDB / 59˚FWB		73˚FDB / 61˚FWB		77˚FDB / 64˚FWB		81˚FDB / 66˚FWB		82˚FDB / 68˚FWB		86˚FDB / 72˚FWB		90˚FDB / 75˚FWB	
			21.5˚CDB / 15˚CWB		23˚CDB / 16˚CWB		25˚CDB / 18˚CWB		27˚CDB / 19˚CWB		28˚CDB / 20˚CWB		30˚CDB / 22˚CWB		32˚CDB / 24˚CWB	
	˚FDB	˚CDB	CA	SHC	CA	SHC	CA	SHC	CA	SHC	CA	SHC	CA	SHC	CA	SHC
20 (2.2)	68	20.0	1.9	1.6	2.1	1.7	2.2	1.7	2.4	1.9	2.4	1.9	2.6	1.8	2.7	1.8
	73	22.5	1.9	1.6	2.1	1.7	2.2	1.7	2.4	1.9	2.4	1.9	2.6	1.8	2.7	1.8
	77	25.0	1.9	1.6	2.1	1.7	2.2	1.7	2.4	1.9	2.4	1.9	2.6	1.8	2.7	1.8
	82	27.5	1.9	1.6	2.1	1.7	2.2	1.7	2.3	1.9	2.4	1.8	2.5	1.8	2.6	1.8
	86	30.0	1.9	1.6	2.0	1.7	2.2	1.7	2.3	1.8	2.4	1.8	2.5	1.8	2.6	1.8
	91	32.5	1.9	1.6	2.0	1.7	2.1	1.7	2.2	1.8	2.3	1.8	2.4	1.8	2.5	1.7
	95	35.0	1.9	1.6	2.0	1.7	2.1	1.7	2.2	1.8	2.3	1.8	2.4	1.8	2.5	1.7
	100	37.5	1.9	1.6	2.0	1.7	2.1	1.7	2.2	1.8	2.2	1.8	2.3	1.8	2.4	1.7
	104	40.0	1.9	1.6	1.9	1.7	2.0	1.7	2.1	1.8	2.2	1.8	2.3	1.7	2.4	1.7
	110	43.0	1.9	1.6	1.9	1.7	2.0	1.6	2.1	1.8	2.1	1.7	2.2	1.7	2.3	1.7
25 (2.8)	68	20.0	2.5	1.9	2.7	2.0	2.8	2.0	3.0	2.1	3.1	2.1	3.3	2.1	3.5	2.1
	73	22.5	2.5	1.9	2.7	2.0	2.8	2.0	3.0	2.1	3.1	2.1	3.3	2.1	3.5	2.1
	77	25.0	2.5	1.9	2.7	2.0	2.8	2.0	3.0	2.1	3.1	2.1	3.3	2.1	3.4	2.1
	82	27.5	2.5	1.9	2.6	2.0	2.8	2.0	2.9	2.1	3.0	2.1	3.2	2.1	3.4	2.0
	86	30.0	2.4	1.9	2.6	2.0	2.8	2.0	2.9	2.1	3.0	2.1	3.1	2.1	3.3	2.0
	91	32.5	2.4	1.9	2.6	2.0	2.7	1.9	2.8	2.1	2.9	2.1	3.1	2.0	3.2	2.0
	95	35.0	2.4	1.9	2.5	2.0	2.7	1.9	2.8	2.1	2.9	2.0	3.0	2.0	3.2	2.0
	100	37.5	2.4	1.9	2.5	1.9	2.6	1.9	2.8	2.0	2.8	2.0	3.0	2.0	3.1	1.9
	104	40.0	2.4	1.9	2.5	1.9	2.6	1.9	2.7	2.0	2.8	2.0	2.9	2.0	3.0	1.9
	110	43.0	2.4	1.8	2.4	1.9	2.6	1.9	2.7	2.0	2.7	2.0	2.8	1.9	2.9	1.9
32 (3.6)	68	20.0	3.2	2.3	3.4	2.4	3.6	2.4	3.9	2.6	4.0	2.6	4.2	2.6	4.5	2.5
	73	22.5	3.2	2.3	3.4	2.4	3.6	2.4	3.9	2.6	4.0	2.6	4.2	2.6	4.5	2.5
	77	25.0	3.2	2.3	3.4	2.4	3.6	2.4	3.8	2.6	4.0	2.6	4.2	2.6	4.4	2.5
	82	27.5	3.2	2.3	3.4	2.4	3.6	2.4	3.8	2.6	3.9	2.6	4.1	2.5	4.3	2.5
	86	30.0	3.1	2.3	3.3	2.4	3.5	2.4	3.7	2.6	3.8	2.5	4.0	2.5	4.2	2.4
	91	32.5	3.1	2.3	3.3	2.4	3.5	2.4	3.7	2.5	3.8	2.5	4.0	2.5	4.1	2.4
	95	35.0	3.1	2.3	3.3	2.4	3.4	2.3	3.6	2.5	3.7	2.5	3.9	2.4	4.1	2.4
	100	37.5	3.1	2.3	3.2	2.4	3.4	2.3	3.5	2.5	3.6	2.4	3.8	2.4	4.0	2.3
	104	40.0	3.1	2.3	3.2	2.3	3.3	2.3	3.5	2.4	3.6	2.4	3.7	2.4	3.9	2.3
	110	43.0	3.0	2.2	3.1	2.3	3.3	2.3	3.4	2.4	3.5	2.4	3.6	2.3	3.8	2.3

kcal/h = kW x 860, Btu/h = kW x 3,412

A6. Cooling capacity with PUHY-HP200-500Y(S)HM

PEFY-P-VMS1(L)-E

CA : Capacity(kW) SHC : Sensible Heat Capacity(kW)

Model size (Rated kW)	Outdoor air temp.		Indoor air temp.													
			71 ˚FDB / 59˚FWB		73˚FDB / 61˚FWB		77˚FDB / 64˚FWB		81˚FDB / 66˚FWB		82˚FDB / 68˚FWB		86˚FDB / 72˚FWB		90˚FDB / 75˚FWB	
			21.5˚CDB / 15˚CWB		23˚CDB / 16˚CWB		25˚CDB / 18˚CWB		27˚CDB / 19˚CWB		28˚CDB / 20˚CWB		30˚CDB / 22˚CWB		32˚CDB / 24˚CWB	
	˚FDB	˚CDB	CA	SHC	CA	SHC	CA	SHC	CA	SHC	CA	SHC	CA	SHC	CA	SHC
15 (1.7)	68	20.0	1.5	1.4	1.6	1.5	1.7	1.5	1.8	1.6	1.9	1.6	2.0	1.6	2.1	1.6
	73	22.5	1.5	1.4	1.6	1.5	1.7	1.5	1.8	1.6	1.9	1.6	2.0	1.6	2.1	1.6
	77	25.0	1.5	1.4	1.6	1.5	1.7	1.5	1.8	1.6	1.9	1.6	2.0	1.6	2.1	1.6
	82	27.5	1.5	1.4	1.6	1.5	1.7	1.5	1.8	1.6	1.8	1.6	1.9	1.6	2.0	1.6
	86	30.0	1.5	1.4	1.6	1.5	1.7	1.5	1.8	1.6	1.8	1.6	1.9	1.6	2.0	1.5
	91	32.5	1.5	1.4	1.6	1.5	1.6	1.5	1.7	1.6	1.8	1.6	1.9	1.6	2.0	1.5
	95	35.0	1.5	1.4	1.5	1.5	1.6	1.5	1.7	1.6	1.8	1.6	1.8	1.5	1.9	1.5
	100	37.5	1.5	1.4	1.5	1.5	1.6	1.4	1.7	1.6	1.7	1.6	1.8	1.5	1.9	1.5
	104	40.0	1.5	1.4	1.5	1.5	1.6	1.4	1.6	1.6	1.7	1.6	1.8	1.5	1.8	1.5
	110	43.0	1.4	1.4	1.5	1.4	1.6	1.4	1.6	1.5	1.6	1.5	1.7	1.5	1.8	1.5
20 (2.2)	68	20.0	1.9	1.7	2.1	1.8	2.2	1.8	2.4	2.0	2.4	2.0	2.6	1.9	2.7	1.9
	73	22.5	1.9	1.7	2.1	1.8	2.2	1.8	2.4	2.0	2.4	2.0	2.6	1.9	2.7	1.9
	77	25.0	1.9	1.7	2.1	1.8	2.2	1.8	2.4	2.0	2.4	1.9	2.6	1.9	2.7	1.9
	82	27.5	1.9	1.7	2.1	1.8	2.2	1.8	2.3	1.9	2.4	1.9	2.5	1.9	2.6	1.9
	86	30.0	1.9	1.7	2.0	1.8	2.2	1.8	2.3	1.9	2.4	1.9	2.5	1.9	2.6	1.9
	91	32.5	1.9	1.7	2.0	1.8	2.1	1.8	2.2	1.9	2.3	1.9	2.4	1.9	2.5	1.8
	95	35.0	1.9	1.7	2.0	1.8	2.1	1.8	2.2	1.9	2.3	1.9	2.4	1.9	2.5	1.8
	100	37.5	1.9	1.7	2.0	1.8	2.1	1.7	2.2	1.9	2.2	1.9	2.3	1.8	2.4	1.8
	104	40.0	1.9	1.7	1.9	1.8	2.0	1.7	2.1	1.9	2.2	1.9	2.3	1.8	2.4	1.8
	110	43.0	1.9	1.7	1.9	1.7	2.0	1.7	2.1	1.9	2.1	1.8	2.2	1.8	2.3	1.8
25 (2.8)	68	20.0	2.5	2.0	2.7	2.2	2.8	2.1	3.0	2.3	3.1	2.3	3.3	2.3	3.5	2.3
	73	22.5	2.5	2.0	2.7	2.2	2.8	2.1	3.0	2.3	3.1	2.3	3.3	2.3	3.5	2.3
	77	25.0	2.5	2.0	2.7	2.2	2.8	2.1	3.0	2.3	3.1	2.3	3.3	2.3	3.4	2.2
	82	27.5	2.5	2.0	2.6	2.2	2.8	2.1	2.9	2.3	3.0	2.3	3.2	2.3	3.4	2.2
	86	30.0	2.4	2.0	2.6	2.1	2.8	2.1	2.9	2.3	3.0	2.3	3.1	2.2	3.3	2.2
	91	32.5	2.4	2.0	2.6	2.1	2.7	2.1	2.8	2.3	2.9	2.3	3.1	2.2	3.2	2.2
	95	35.0	2.4	2.0	2.5	2.1	2.7	2.1	2.8	2.3	2.9	2.2	3.0	2.2	3.2	2.2
	100	37.5	2.4	2.0	2.5	2.1	2.6	2.1	2.8	2.2	2.8	2.2	3.0	2.2	3.1	2.1
	104	40.0	2.4	2.0	2.5	2.1	2.6	2.1	2.7	2.2	2.8	2.2	2.9	2.2	3.0	2.1
	110	43.0	2.4	2.0	2.4	2.1	2.6	2.0	2.7	2.2	2.7	2.2	2.8	2.1	2.9	2.1
32 (3.6)	68	20.0	3.2	2.5	3.4	2.6	3.6	2.6	3.9	2.8	4.0	2.8	4.2	2.8	4.5	2.7
	73	22.5	3.2	2.5	3.4	2.6	3.6	2.6	3.9	2.8	4.0	2.8	4.2	2.8	4.5	2.7
	77	25.0	3.2	2.5	3.4	2.6	3.6	2.6	3.8	2.8	4.0	2.8	4.2	2.7	4.4	2.7
	82	27.5	3.2	2.5	3.4	2.6	3.6	2.6	3.8	2.8	3.9	2.8	4.1	2.7	4.3	2.6
	86	30.0	3.1	2.5	3.3	2.6	3.5	2.6	3.7	2.7	3.8	2.7	4.0	2.7	4.2	2.6
	91	32.5	3.1	2.4	3.3	2.6	3.5	2.5	3.7	2.7	3.8	2.7	4.0	2.6	4.1	2.6
	95	35.0	3.1	2.4	3.3	2.5	3.4	2.5	3.6	2.7	3.7	2.7	3.9	2.6	4.1	2.6
	100	37.5	3.1	2.4	3.2	2.5	3.4	2.5	3.5	2.7	3.6	2.6	3.8	2.6	4.0	2.5
	104	40.0	3.1	2.4	3.2	2.5	3.3	2.5	3.5	2.6	3.6	2.6	3.7	2.6	3.9	2.5
	110	43.0	3.0	2.4	3.1	2.5	3.3	2.4	3.4	2.6	3.5	2.6	3.6	2.5	3.8	2.5
40 (4.5)	68	20.0	4.0	3.0	4.3	3.2	4.5	3.1	4.8	3.4	5.0	3.4	5.3	3.3	5.6	3.3
	73	22.5	4.0	3.0	4.3	3.2	4.5	3.1	4.8	3.4	5.0	3.4	5.3	3.3	5.6	3.3
	77	25.0	4.0	3.0	4.3	3.2	4.5	3.1	4.8	3.4	5.0	3.4	5.3	3.3	5.5	3.2
	82	27.5	4.0	3.0	4.2	3.2	4.5	3.1	4.7	3.3	4.9	3.3	5.1	3.3	5.4	3.2
	86	30.0	3.9	3.0	4.2	3.1	4.4	3.1	4.7	3.3	4.8	3.3	5.1	3.2	5.3	3.2
	91	32.5	3.9	3.0	4.1	3.1	4.4	3.1	4.6	3.3	4.7	3.3	5.0	3.2	5.2	3.1
	95	35.0	3.9	3.0	4.1	3.1	4.3	3.0	4.5	3.3	4.6	3.2	4.9	3.2	5.1	3.1
	100	37.5	3.9	2.9	4.0	3.1	4.2	3.0	4.4	3.2	4.5	3.2	4.8	3.1	5.0	3.1
	104	40.0	3.8	2.9	4.0	3.0	4.2	3.0	4.4	3.2	4.5	3.2	4.7	3.1	4.9	3.0
	110	43.0	3.8	2.9	3.9	3.0	4.1	2.9	4.3	3.1	4.4	3.1	4.5	3.0	4.7	3.0
50 (5.6)	68	20.0	4.9	3.7	5.3	3.9	5.6	3.8	6.0	4.1	6.2	4.1	6.6	4.1	7.0	4.0
	73	22.5	4.9	3.7	5.3	3.9	5.6	3.8	6.0	4.1	6.2	4.1	6.6	4.1	7.0	4.0
	77	25.0	4.9	3.7	5.3	3.9	5.6	3.8	6.0	4.1	6.2	4.1	6.5	4.1	6.9	4.0
	82	27.5	4.9	3.7	5.3	3.9	5.6	3.8	5.9	4.1	6.1	4.1	6.4	4.0	6.7	3.9
	86	30.0	4.9	3.6	5.2	3.8	5.5	3.8	5.8	4.1	6.0	4.0	6.3	4.0	6.6	3.9
	91	32.5	4.9	3.6	5.1	3.8	5.4	3.7	5.7	4.0	5.9	4.0	6.2	3.9	6.4	3.8
	95	35.0	4.8	3.6	5.1	3.8	5.4	3.7	5.6	4.0	5.8	3.9	6.1	3.9	6.3	3.8
	100	37.5	4.8	3.6	5.0	3.7	5.3	3.7	5.5	3.9	5.7	3.9	5.9	3.8	6.2	3.7
	104	40.0	4.8	3.6	5.0	3.7	5.2	3.6	5.4	3.9	5.6	3.9	5.8	3.8	6.1	3.7
	110	43.0	4.7	3.6	4.9	3.7	5.1	3.6	5.3	3.8	5.4	3.8	5.7	3.7	5.9	3.6
63 (7.1)	68	20.0	6.3	4.6	6.7	4.9	7.2	4.9	7.6	5.2	7.9	5.2	8.4	5.2	8.8	5.1
	73	22.5	6.3	4.6	6.7	4.9	7.2	4.9	7.6	5.2	7.9	5.2	8.4	5.2	8.8	5.1
	77	25.0	6.3	4.6	6.7	4.9	7.2	4.9	7.6	5.2	7.8	5.2	8.3	5.1	8.7	5.0
	82	27.5	6.2	4.6	6.7	4.9	7.1	4.8	7.5	5.2	7.7	5.1	8.1	5.1	8.5	4.9
	86	30.0	6.2	4.6	6.6	4.8	7.0	4.8	7.4	5.1	7.6	5.1	8.0	5.0	8.4	4.9
	91	32.5	6.2	4.6	6.5	4.8	6.9	4.7	7.2	5.1	7.4	5.0	7.8	4.9	8.2	4.8
	95	35.0	6.1	4.6	6.4	4.8	6.8	4.7	7.1	5.0	7.3	5.0	7.7	4.9	8.0	4.8
	100	37.5	6.1	4.5	6.4	4.7	6.7	4.6	7.0	5.0	7.2	4.9	7.5	4.8	7.8	4.7
	104	40.0	6.1	4.5	6.3	4.7	6.6	4.6	6.9	4.9	7.1	4.9	7.4	4.8	7.7	4.6
	110	43.0	6.0	4.5	6.2	4.6	6.5	4.5	6.7	4.8	6.9	4.8	7.2	4.7	7.5	4.6

kcal/h = kW x 860, Btu/h = kW x 3,412

CT

A7. Cooling capacity with PQHY-P200-900Y(S)HM PQRY-P200-600Y(S)HM

PEFY-P-VMH-E

CA : Capacity(kW) SHC : Sensible Heat Capacity(kW)

Model size (Rated kW)	Water temp.		Indoor air temp.													
			71 ˚FDB / 59˚FWB		73˚FDB / 61˚FWB		77˚FDB / 64˚FWB		81˚FDB / 66˚FWB		82˚FDB / 68˚FWB		86˚FDB / 72˚FWB		90˚FDB / 75˚FWB	
			21.5˚CDB / 15˚CWB		23˚CDB / 16˚CWB		25˚CDB / 18˚CWB		27˚CDB / 19˚CWB		28˚CDB / 20˚CWB		30˚CDB / 22˚CWB		32˚CDB / 24˚CWB	
	˚F	˚C	CA	SHC	CA	SHC	CA	SHC	CA	SHC	CA	SHC	CA	SHC	CA	SHC
40 (4.5)	50	10.0	4.1	3.1	4.2	3.2	4.4	3.2	4.5	3.4	4.5	3.3	4.5	3.2	4.5	3.0
	68	20.0	4.1	3.1	4.2	3.2	4.4	3.2	4.5	3.4	4.5	3.3	4.5	3.2	4.5	3.0
	86	30.0	4.1	3.1	4.2	3.2	4.4	3.2	4.5	3.4	4.5	3.3	4.5	3.2	4.5	3.0
	104	40.0	3.6	2.9	3.7	3.0	3.9	3.0	4.0	3.2	4.0	3.1	4.0	3.0	4.0	2.9
	113	45.0	3.4	2.8	3.5	2.9	3.7	2.9	3.8	3.1	3.8	3.0	3.8	2.9	3.8	2.8
50 (5.6)	50	10.0	5.0	3.7	5.2	3.8	5.5	3.7	5.6	3.9	5.6	3.8	5.6	3.6	5.6	3.5
	68	20.0	5.0	3.7	5.2	3.8	5.5	3.7	5.6	3.9	5.6	3.8	5.6	3.6	5.6	3.5
	86	30.0	5.0	3.7	5.2	3.8	5.5	3.7	5.6	3.9	5.6	3.8	5.6	3.6	5.6	3.5
	104	40.0	4.5	3.4	4.6	3.5	4.9	3.4	5.0	3.6	5.0	3.6	5.0	3.4	5.0	3.2
	113	45.0	4.2	3.3	4.3	3.4	4.6	3.3	4.7	3.5	4.7	3.4	4.7	3.3	4.7	3.1
63 (7.1)	50	10.0	6.4	4.8	6.6	5.0	6.9	4.9	7.1	5.2	7.1	5.1	7.1	4.8	7.1	4.6
	68	20.0	6.4	4.8	6.6	5.0	6.9	4.9	7.1	5.2	7.1	5.1	7.1	4.8	7.1	4.6
	86	30.0	6.4	4.8	6.6	5.0	6.9	4.9	7.1	5.2	7.1	5.1	7.1	4.8	7.1	4.6
	104	40.0	5.7	4.5	5.8	4.6	6.2	4.6	6.3	4.9	6.3	4.7	6.3	4.5	6.3	4.4
	113	45.0	5.3	4.3	5.5	4.5	5.8	4.4	5.9	4.7	5.9	4.6	5.9	4.4	5.9	4.2
71 (8.0)	50	10.0	7.2	5.4	7.4	5.5	7.8	5.5	8.0	5.8	8.0	5.6	8.0	5.4	8.0	5.1
	68	20.0	7.2	5.4	7.4	5.5	7.8	5.5	8.0	5.8	8.0	5.6	8.0	5.4	8.0	5.1
	86	30.0	7.2	5.4	7.4	5.5	7.8	5.5	8.0	5.8	8.0	5.6	8.0	5.4	8.0	5.1
	104	40.0	6.4	5.0	6.6	5.2	6.9	5.1	7.1	5.4	7.1	5.3	7.1	5.1	7.1	4.8
	113	45.0	6.0	4.8	6.2	5.0	6.5	4.9	6.7	5.2	6.7	5.1	6.7	4.9	6.7	4.7
80 (9.0)	50	10.0	8.1	6.1	8.3	6.3	8.8	6.2	9.0	6.5	9.0	6.4	9.0	6.1	9.0	5.8
	68	20.0	8.1	6.1	8.3	6.3	8.8	6.2	9.0	6.5	9.0	6.4	9.0	6.1	9.0	5.8
	86	30.0	8.1	6.1	8.3	6.3	8.8	6.2	9.0	6.5	9.0	6.4	9.0	6.1	9.0	5.8
	104	40.0	7.2	5.7	7.4	5.8	7.8	5.8	8.0	6.1	8.0	6.0	8.0	5.7	8.0	5.5
	113	45.0	6.8	5.5	7.0	5.6	7.3	5.6	7.5	5.9	7.5	5.8	7.5	5.6	7.5	5.3
100 (11.2)	50	10.0	10.1	8.3	10.4	8.5	10.9	8.4	11.2	9.0	11.2	8.8	11.2	8.4	11.2	8.1
	68	20.0	10.1	8.3	10.4	8.5	10.9	8.4	11.2	9.0	11.2	8.8	11.2	8.4	11.2	8.1
	86	30.0	10.1	8.3	10.4	8.5	10.9	8.4	11.2	9.0	11.2	8.8	11.2	8.4	11.2	8.1
	104	40.0	9.0	7.7	9.2	8.0	9.7	7.9	10.0	8.5	10.0	8.3	10.0	8.0	10.0	7.7
	113	45.0	8.4	7.5	8.7	7.8	9.1	7.7	9.4	8.2	9.4	8.1	9.4	7.8	9.4	7.5
125 (14.0)	50	10.0	12.6	9.5	13.0	9.7	13.7	9.6	14.0	10.1	14.0	9.9	14.0	9.5	14.0	9.0
	68	20.0	12.6	9.5	13.0	9.7	13.7	9.6	14.0	10.1	14.0	9.9	14.0	9.5	14.0	9.0
	86	30.0	12.6	9.5	13.0	9.7	13.7	9.6	14.0	10.1	14.0	9.9	14.0	9.5	14.0	9.0
	104	40.0	11.2	8.8	11.5	9.1	12.1	8.9	12.5	9.5	12.5	9.3	12.5	8.9	12.5	8.5
	113	45.0	10.5	8.5	10.8	8.7	11.4	8.6	11.7	9.2	11.7	9.0	11.7	8.6	11.7	8.3
140 (16.0)	50	10.0	14.4	10.8	14.8	11.1	15.6	11.0	16.0	11.6	16.0	11.3	16.0	10.8	16.0	10.3
	68	20.0	14.4	10.8	14.8	11.1	15.6	11.0	16.0	11.6	16.0	11.3	16.0	10.8	16.0	10.3
	86	30.0	14.4	10.8	14.8	11.1	15.6	11.0	16.0	11.6	16.0	11.3	16.0	10.8	16.0	10.3
	104	40.0	12.8	10.1	13.2	10.4	13.9	10.2	14.2	10.9	14.2	10.6	14.2	10.2	14.2	9.7
	113	45.0	12.0	9.7	12.4	10.0	13.0	9.9	13.4	10.5	13.4	10.3	13.4	9.8	13.4	9.4
200 (22.4)	50	10.0	20.2	15.5	20.7	16.0	21.8	15.8	22.4	16.7	22.4	16.3	22.4	15.6	22.4	14.9
	68	20.0	20.2	15.5	20.7	16.0	21.8	15.8	22.4	16.7	22.4	16.3	22.4	15.6	22.4	14.9
	86	30.0	20.2	15.5	20.7	16.0	21.8	15.8	22.4	16.7	22.4	16.3	22.4	15.6	22.4	14.9
	104	40.0	17.9	14.5	18.4	14.9	19.4	14.7	19.9	15.7	19.9	15.4	19.9	14.7	19.9	14.1
	113	45.0	16.8	14.0	17.3	14.4	18.2	14.2	18.7	15.2	18.7	14.9	18.7	14.3	18.7	13.7
250 (28.0)	50	10.0	25.2	19.3	25.9	19.9	27.3	19.6	28.0	20.7	28.0	20.3	28.0	19.4	28.0	18.5
	68	20.0	25.2	19.3	25.9	19.9	27.3	19.6	28.0	20.7	28.0	20.3	28.0	19.4	28.0	18.5
	86	30.0	25.2	19.3	25.9	19.9	27.3	19.6	28.0	20.7	28.0	20.3	28.0	19.4	28.0	18.5
	104	40.0	22.4	18.0	23.1	18.5	24.3	18.3	24.9	19.5	24.9	19.1	24.9	18.3	24.9	17.5
	113	45.0	21.0	17.3	21.6	17.9	22.8	17.7	23.4	18.8	23.4	18.5	23.4	17.7	23.4	17.0

kcal/h = kW x 860, Btu/h = kW x 3,412

A7. Cooling capacity with PQHY-P200-900Y(S)HM PQRY-P200-600Y(S)HM

PEFY-P-VMR-E-L/R

CA : Capacity(kW) SHC : Sensible Heat Capacity(kW)

Model size (Rated kW)	Water temp.		Indoor air temp.													
			71 ˚FDB / 59˚FWB		73˚FDB / 61˚FWB		77˚FDB / 64˚FWB		81˚FDB / 66˚FWB		82˚FDB / 68˚FWB		86˚FDB / 72˚FWB		90˚FDB / 75˚FWB	
			21.5˚CDB / 15˚CWB		23˚CDB / 16˚CWB		25˚CDB / 18˚CWB		27˚CDB / 19˚CWB		28˚CDB / 20˚CWB		30˚CDB / 22˚CWB		32˚CDB / 24˚CWB	
	˚F	˚C	CA	SHC	CA	SHC	CA	SHC	CA	SHC	CA	SHC	CA	SHC	CA	SHC
20 (2.2)	50	10.0	2.0	1.7	2.0	1.7	2.1	1.7	2.2	1.8	2.2	1.8	2.2	1.7	2.2	1.6
	68	20.0	2.0	1.7	2.0	1.7	2.1	1.7	2.2	1.8	2.2	1.8	2.2	1.7	2.2	1.6
	86	30.0	2.0	1.7	2.0	1.7	2.1	1.7	2.2	1.8	2.2	1.8	2.2	1.7	2.2	1.6
	104	40.0	1.8	1.6	1.8	1.6	1.9	1.6	2.0	1.7	2.0	1.7	2.0	1.6	2.0	1.6
	113	45.0	1.7	1.5	1.7	1.6	1.8	1.6	1.8	1.7	1.8	1.6	1.8	1.6	1.8	1.5
25 (2.8)	50	10.0	2.5	1.9	2.6	2.0	2.7	1.9	2.8	2.1	2.8	2.0	2.8	1.9	2.8	1.8
	68	20.0	2.5	1.9	2.6	2.0	2.7	1.9	2.8	2.1	2.8	2.0	2.8	1.9	2.8	1.8
	86	30.0	2.5	1.9	2.6	2.0	2.7	1.9	2.8	2.1	2.8	2.0	2.8	1.9	2.8	1.8
	104	40.0	2.2	1.8	2.3	1.8	2.4	1.8	2.5	1.9	2.5	1.9	2.5	1.8	2.5	1.7
	113	45.0	2.1	1.7	2.2	1.8	2.3	1.8	2.3	1.9	2.3	1.8	2.3	1.8	2.3	1.7
32 (3.6)	50	10.0	3.2	2.3	3.3	2.4	3.5	2.4	3.6	2.5	3.6	2.4	3.6	2.3	3.6	2.2
	68	20.0	3.2	2.3	3.3	2.4	3.5	2.4	3.6	2.5	3.6	2.4	3.6	2.3	3.6	2.2
	86	30.0	3.2	2.3	3.3	2.4	3.5	2.4	3.6	2.5	3.6	2.4	3.6	2.3	3.6	2.2
	104	40.0	2.9	2.2	3.0	2.2	3.1	2.2	3.2	2.3	3.2	2.3	3.2	2.2	3.2	2.1
	113	45.0	2.7	2.1	2.8	2.1	2.9	2.1	3.0	2.2	3.0	2.2	3.0	2.1	3.0	2.0

kcal/h = kW x 860, Btu/h = kW x 3,412

CT

A7. Cooling capacity with PQHY-P200-900Y(S)HM PQRY-P200-600Y(S)HM

PEFY-P-VMS1(L)-E

CA : Capacity(kW) SHC : Sensible Heat Capacity(kW)

Model size (Rated kW)	Water temp.		Indoor air temp.													
			71 ˚FDB / 59˚FWB		73˚FDB / 61˚FWB		77˚FDB / 64˚FWB		81˚FDB / 66˚FWB		82˚FDB / 68˚FWB		86˚FDB / 72˚FWB		90˚FDB / 75˚FWB	
			21.5˚CDB / 15˚CWB		23˚CDB / 16˚CWB		25˚CDB / 18˚CWB		27˚CDB / 19˚CWB		28˚CDB / 20˚CWB		30˚CDB / 22˚CWB		32˚CDB / 24˚CWB	
	˚F	˚C	CA	SHC	CA	SHC	CA	SHC	CA	SHC	CA	SHC	CA	SHC	CA	SHC
15 (1.7)	50	10.0	1.5	1.4	1.6	1.5	1.7	1.5	1.7	1.6	1.7	1.6	1.7	1.5	1.7	1.5
	68	20.0	1.5	1.4	1.6	1.5	1.7	1.5	1.7	1.6	1.7	1.6	1.7	1.5	1.7	1.5
	86	30.0	1.5	1.4	1.6	1.5	1.7	1.5	1.7	1.6	1.7	1.6	1.7	1.5	1.7	1.5
	104	40.0	1.4	1.4	1.4	1.4	1.5	1.4	1.5	1.5	1.5	1.5	1.5	1.4	1.5	1.4
	113	45.0	1.3	1.3	1.3	1.3	1.4	1.4	1.4	1.4	1.4	1.4	1.4	1.4	1.4	1.4
20 (2.2)	50	10.0	2.0	1.7	2.0	1.8	2.1	1.8	2.2	1.9	2.2	1.9	2.2	1.8	2.2	1.7
	68	20.0	2.0	1.7	2.0	1.8	2.1	1.8	2.2	1.9	2.2	1.9	2.2	1.8	2.2	1.7
	86	30.0	2.0	1.7	2.0	1.8	2.1	1.8	2.2	1.9	2.2	1.9	2.2	1.8	2.2	1.7
	104	40.0	1.8	1.6	1.8	1.7	1.9	1.7	2.0	1.8	2.0	1.8	2.0	1.7	2.0	1.7
	113	45.0	1.7	1.6	1.7	1.6	1.8	1.6	1.8	1.8	1.8	1.7	1.8	1.7	1.8	1.6
25 (2.8)	50	10.0	2.5	2.1	2.6	2.1	2.7	2.1	2.8	2.2	2.8	2.2	2.8	2.1	2.8	2.0
	68	20.0	2.5	2.1	2.6	2.1	2.7	2.1	2.8	2.2	2.8	2.2	2.8	2.1	2.8	2.0
	86	30.0	2.5	2.1	2.6	2.1	2.7	2.1	2.8	2.2	2.8	2.2	2.8	2.1	2.8	2.0
	104	40.0	2.2	1.9	2.3	2.0	2.4	2.0	2.5	2.1	2.5	2.1	2.5	2.0	2.5	1.9
	113	45.0	2.1	1.9	2.2	1.9	2.3	1.9	2.3	2.1	2.3	2.0	2.3	2.0	2.3	1.9
32 (3.6)	50	10.0	3.2	2.5	3.3	2.6	3.5	2.5	3.6	2.7	3.6	2.6	3.6	2.5	3.6	2.4
	68	20.0	3.2	2.5	3.3	2.6	3.5	2.5	3.6	2.7	3.6	2.6	3.6	2.5	3.6	2.4
	86	30.0	3.2	2.5	3.3	2.6	3.5	2.5	3.6	2.7	3.6	2.6	3.6	2.5	3.6	2.4
	104	40.0	2.9	2.3	3.0	2.4	3.1	2.4	3.2	2.5	3.2	2.5	3.2	2.4	3.2	2.3
	113	45.0	2.7	2.2	2.8	2.3	2.9	2.3	3.0	2.4	3.0	2.4	3.0	2.3	3.0	2.2
40 (4.5)	50	10.0	4.1	3.0	4.2	3.1	4.4	3.1	4.5	3.2	4.5	3.2	4.5	3.0	4.5	2.9
	68	20.0	4.1	3.0	4.2	3.1	4.4	3.1	4.5	3.2	4.5	3.2	4.5	3.0	4.5	2.9
	86	30.0	4.1	3.0	4.2	3.1	4.4	3.1	4.5	3.2	4.5	3.2	4.5	3.0	4.5	2.9
	104	40.0	3.6	2.8	3.7	2.9	3.9	2.9	4.0	3.0	4.0	3.0	4.0	2.8	4.0	2.7
	113	45.0	3.4	2.7	3.5	2.8	3.7	2.8	3.8	2.9	3.8	2.9	3.8	2.8	3.8	2.6
50 (5.6)	50	10.0	5.0	3.7	5.2	3.8	5.5	3.8	5.6	4.0	5.6	3.9	5.6	3.7	5.6	3.5
	68	20.0	5.0	3.7	5.2	3.8	5.5	3.8	5.6	4.0	5.6	3.9	5.6	3.7	5.6	3.5
	86	30.0	5.0	3.7	5.2	3.8	5.5	3.8	5.6	4.0	5.6	3.9	5.6	3.7	5.6	3.5
	104	40.0	4.5	3.4	4.6	3.5	4.9	3.5	5.0	3.7	5.0	3.6	5.0	3.5	5.0	3.3
	113	45.0	4.2	3.3	4.3	3.4	4.6	3.4	4.7	3.6	4.7	3.5	4.7	3.3	4.7	3.2
63 (7.1)	50	10.0	6.4	4.7	6.6	4.8	6.9	4.7	7.1	5.0	7.1	4.9	7.1	4.7	7.1	4.4
	68	20.0	6.4	4.7	6.6	4.8	6.9	4.7	7.1	5.0	7.1	4.9	7.1	4.7	7.1	4.4
	86	30.0	6.4	4.7	6.6	4.8	6.9	4.7	7.1	5.0	7.1	4.9	7.1	4.7	7.1	4.4
	104	40.0	5.7	4.3	5.8	4.5	6.2	4.4	6.3	4.7	6.3	4.6	6.3	4.4	6.3	4.2
	113	45.0	5.3	4.2	5.5	4.3	5.8	4.2	5.9	4.5	5.9	4.4	5.9	4.2	5.9	4.0

kcal/h = kW x 860, Btu/h = kW x 3,412

A8. Cooling capacity with PUMY-P100,125,140YHMB,VHMB

PEFY-P-VMH-E

CA : Capacity(kW) SHC : Sensible Heat Capacity(kW)

Model size (Rated kW)	Outdoor air temp.		Indoor air temp.													
			71 ˚FDB / 59˚FWB		73˚FDB / 61˚FWB		77˚FDB / 64˚FWB		81˚FDB / 66˚FWB		82˚FDB / 68˚FWB		86˚FDB / 72˚FWB		90˚FDB / 75˚FWB	
			21.5˚CDB / 15˚CWB		23˚CDB / 16˚CWB		25˚CDB / 18˚CWB		27˚CDB / 19˚CWB		28˚CDB / 20˚CWB		30˚CDB / 22˚CWB		32˚CDB / 24˚CWB	
	˚FDB	˚CDB	CA	SHC	CA	SHC	CA	SHC	CA	SHC	CA	SHC	CA	SHC	CA	SHC
40 (4.5)	68	20.0	4.2	3.2	4.4	3.4	4.7	3.3	4.8	3.5	5.0	3.5	5.3	3.5	5.5	3.4
	73	22.5	4.2	3.2	4.4	3.3	4.6	3.3	4.8	3.5	4.9	3.5	5.2	3.4	5.5	3.4
	77	25.0	4.1	3.2	4.3	3.3	4.6	3.3	4.7	3.5	4.9	3.5	5.2	3.4	5.4	3.3
	82	27.5	4.1	3.2	4.3	3.3	4.5	3.3	4.7	3.5	4.8	3.4	5.1	3.4	5.4	3.3
	86	30.0	4.0	3.1	4.2	3.3	4.5	3.2	4.6	3.4	4.8	3.4	5.1	3.4	5.3	3.3
	91	32.5	4.0	3.1	4.2	3.2	4.4	3.2	4.6	3.4	4.7	3.4	5.0	3.4	5.3	3.3
	95	35.0	3.9	3.1	4.1	3.2	4.4	3.2	4.5	3.4	4.6	3.4	4.9	3.3	5.2	3.3
	100	37.5	3.8	3.0	4.0	3.2	4.3	3.2	4.5	3.4	4.6	3.3	4.9	3.3	5.1	3.2
	104	40.0	3.8	3.0	4.0	3.2	4.3	3.1	4.4	3.3	4.5	3.3	4.8	3.3	5.1	3.2
	110	43.0	3.7	3.0	3.9	3.1	4.2	3.1	4.3	3.3	4.4	3.3	4.8	3.3	5.0	3.2
50 (5.6)	68	20.0	5.3	3.8	5.5	3.9	5.8	3.9	6.0	4.1	6.2	4.1	6.6	4.0	6.9	3.9
	73	22.5	5.2	3.8	5.5	3.9	5.8	3.9	6.0	4.1	6.1	4.0	6.5	4.0	6.8	3.9
	77	25.0	5.2	3.7	5.4	3.9	5.7	3.8	5.9	4.0	6.1	4.0	6.4	4.0	6.7	3.9
	82	27.5	5.1	3.7	5.3	3.8	5.7	3.8	5.8	4.0	6.0	4.0	6.4	3.9	6.7	3.8
	86	30.0	5.0	3.7	5.3	3.8	5.6	3.8	5.8	4.0	5.9	4.0	6.3	3.9	6.6	3.8
	91	32.5	4.9	3.6	5.2	3.8	5.5	3.7	5.7	3.9	5.9	3.9	6.2	3.9	6.5	3.8
	95	35.0	4.9	3.6	5.1	3.7	5.5	3.7	5.6	3.9	5.8	3.9	6.2	3.9	6.5	3.8
	100	37.5	4.8	3.5	5.0	3.7	5.4	3.7	5.5	3.9	5.7	3.8	6.1	3.8	6.4	3.7
	104	40.0	4.7	3.5	4.9	3.7	5.3	3.7	5.5	3.8	5.6	3.8	6.0	3.8	6.3	3.7
	110	43.0	4.6	3.4	4.8	3.6	5.2	3.6	5.4	3.8	5.5	3.8	5.9	3.8	6.2	3.7
63 (7.1)	68	20.0	6.7	5.0	7.0	5.2	7.4	5.1	7.6	5.4	7.9	5.4	8.3	5.3	8.7	5.2
	73	22.5	6.6	4.9	6.9	5.1	7.3	5.1	7.6	5.4	7.8	5.4	8.2	5.3	8.6	5.2
	77	25.0	6.5	4.9	6.9	5.1	7.2	5.0	7.5	5.3	7.7	5.3	8.2	5.2	8.5	5.1
	82	27.5	6.5	4.9	6.8	5.1	7.2	5.0	7.4	5.3	7.6	5.3	8.1	5.2	8.5	5.1
	86	30.0	6.4	4.8	6.7	5.0	7.1	5.0	7.3	5.3	7.5	5.2	8.0	5.2	8.4	5.1
	91	32.5	6.3	4.8	6.6	5.0	7.0	4.9	7.2	5.2	7.4	5.2	7.9	5.1	8.3	5.0
	95	35.0	6.2	4.7	6.5	4.9	6.9	4.9	7.1	5.2	7.3	5.2	7.8	5.1	8.2	5.0
	100	37.5	6.1	4.7	6.4	4.9	6.8	4.9	7.0	5.2	7.2	5.1	7.7	5.1	8.1	5.0
	104	40.0	5.9	4.6	6.3	4.8	6.8	4.8	6.9	5.1	7.1	5.1	7.6	5.0	8.0	4.9
	110	43.0	5.8	4.5	6.1	4.8	6.6	4.8	6.8	5.1	6.9	5.0	7.5	5.0	7.9	4.9
71 (8.0)	68	20.0	7.5	5.6	7.9	5.8	8.3	5.7	8.6	6.0	8.9	6.0	9.4	5.9	9.8	5.8
	73	22.5	7.4	5.5	7.8	5.8	8.3	5.7	8.5	6.0	8.8	6.0	9.3	5.9	9.7	5.8
	77	25.0	7.4	5.5	7.7	5.7	8.2	5.6	8.4	6.0	8.7	5.9	9.2	5.8	9.6	5.7
	82	27.5	7.3	5.4	7.6	5.7	8.1	5.6	8.3	5.9	8.6	5.9	9.1	5.8	9.5	5.7
	86	30.0	7.2	5.4	7.5	5.6	8.0	5.6	8.2	5.9	8.5	5.8	9.0	5.8	9.4	5.6
	91	32.5	7.1	5.3	7.4	5.6	7.9	5.5	8.1	5.8	8.4	5.8	8.9	5.7	9.3	5.6
	95	35.0	6.9	5.3	7.3	5.5	7.8	5.5	8.0	5.8	8.2	5.7	8.8	5.7	9.2	5.6
	100	37.5	6.8	5.2	7.2	5.5	7.7	5.4	7.9	5.7	8.1	5.7	8.7	5.7	9.1	5.5
	104	40.0	6.7	5.2	7.1	5.4	7.6	5.4	7.8	5.7	8.0	5.6	8.6	5.6	9.0	5.5
	110	43.0	6.5	5.1	6.9	5.3	7.5	5.3	7.7	5.6	7.8	5.6	8.5	5.6	8.9	5.5
80 (9.0)	68	20.0	8.5	6.3	8.9	6.6	9.4	6.5	9.7	6.8	10.0	6.8	10.5	6.7	11.0	6.6
	73	22.5	8.4	6.2	8.8	6.5	9.3	6.4	9.6	6.8	9.9	6.8	10.4	6.7	10.9	6.5
	77	25.0	8.3	6.2	8.7	6.5	9.2	6.4	9.5	6.8	9.8	6.7	10.3	6.6	10.8	6.5
	82	27.5	8.2	6.1	8.6	6.4	9.1	6.3	9.4	6.7	9.7	6.7	10.2	6.6	10.7	6.4
	86	30.0	8.1	6.1	8.5	6.4	9.0	6.3	9.3	6.7	9.5	6.6	10.1	6.5	10.6	6.4
	91	32.5	7.9	6.0	8.4	6.3	8.9	6.2	9.1	6.6	9.4	6.6	10.0	6.5	10.5	6.4
	95	35.0	7.8	6.0	8.2	6.2	8.8	6.2	9.0	6.5	9.3	6.5	9.9	6.4	10.4	6.3
	100	37.5	7.7	5.9	8.1	6.2	8.7	6.1	8.9	6.5	9.1	6.5	9.8	6.4	10.3	6.3
	104	40.0	7.5	5.8	8.0	6.1	8.6	6.1	8.8	6.5	9.0	6.4	9.7	6.4	10.1	6.2
	110	43.0	7.3	5.7	7.8	6.0	8.4	6.0	8.6	6.4	8.8	6.3	9.5	6.3	10.0	6.2
100 (11.2)	68	20.0	10.5	8.5	11.1	8.8	11.7	8.7	12.0	9.3	12.4	9.3	13.1	9.1	13.7	8.9
	73	22.5	10.4	8.4	10.9	8.8	11.6	8.7	11.9	9.3	12.3	9.2	13.0	9.1	13.6	8.9
	77	25.0	10.3	8.4	10.8	8.7	11.4	8.6	11.8	9.2	12.2	9.2	12.9	9.0	13.5	8.8
	82	27.5	10.2	8.3	10.7	8.7	11.3	8.6	11.7	9.2	12.0	9.1	12.7	9.0	13.4	8.8
	86	30.0	10.0	8.2	10.5	8.6	11.2	8.5	11.5	9.1	11.9	9.0	12.6	8.9	13.2	8.8
	91	32.5	9.9	8.2	10.4	8.5	11.1	8.5	11.4	9.0	11.7	9.0	12.5	8.9	13.1	8.7
	95	35.0	9.7	8.1	10.2	8.5	10.9	8.4	11.2	9.0	11.5	8.9	12.3	8.8	12.9	8.7
	100	37.5	9.5	8.0	10.1	8.4	10.8	8.4	11.1	8.9	11.4	8.8	12.2	8.8	12.8	8.6
	104	40.0	9.4	7.9	9.9	8.3	10.7	8.3	10.9	8.9	11.2	8.8	12.0	8.7	12.6	8.6
	110	43.0	9.1	7.8	9.7	8.2	10.5	8.2	10.7	8.8	11.0	8.7	11.8	8.7	12.4	8.5
125 (14.0)	68	20.0	13.2	9.8	13.8	10.2	14.6	10.0	15.1	10.6	15.5	10.6	16.4	10.4	17.2	10.2
	73	22.5	13.0	9.7	13.7	10.1	14.4	10.0	14.9	10.5	15.4	10.5	16.2	10.3	17.0	10.1
	77	25.0	12.9	9.6	13.5	10.0	14.3	9.9	14.7	10.5	15.2	10.4	16.1	10.3	16.9	10.0
	82	27.5	12.7	9.5	13.4	9.9	14.1	9.8	14.6	10.4	15.0	10.3	15.9	10.2	16.7	10.0
	86	30.0	12.5	9.5	13.2	9.9	14.0	9.8	14.4	10.3	14.8	10.3	15.8	10.1	16.5	9.9
	91	32.5	12.4	9.4	13.0	9.8	13.8	9.7	14.2	10.2	14.6	10.2	15.6	10.1	16.3	9.8
	95	35.0	12.2	9.3	12.8	9.7	13.7	9.6	14.0	10.1	14.4	10.1	15.4	10.0	16.2	9.8
	100	37.5	11.9	9.2	12.6	9.6	13.5	9.5	13.8	10.1	14.2	10.0	15.2	9.9	16.0	9.7
	104	40.0	11.7	9.0	12.4	9.5	13.3	9.5	13.7	10.0	14.0	9.9	15.0	9.9	15.8	9.7
	110	43.0	11.4	8.9	12.1	9.3	13.1	9.4	13.4	9.9	13.7	9.8	14.8	9.8	15.6	9.6

kcal/h = kW x 860, Btu/h = kW x 3,412

CT

A8. Cooling capacity with PUMY-P100,125,140YHMB,VHMB

PEFY-P-VMH-E

CA : Capacity(kW) SHC : Sensible Heat Capacity(kW)

Model size (Rated kW)	Outdoor air temp.		Indoor air temp.													
			71 ˚FDB / 59˚FWB		73˚FDB / 61˚FWB		77˚FDB / 64˚FWB		81˚FDB / 66˚FWB		82˚FDB / 68˚FWB		86˚FDB / 72˚FWB		90˚FDB / 75˚FWB	
			21.5˚CDB / 15˚CWB		23˚CDB / 16˚CWB		25˚CDB / 18˚CWB		27˚CDB / 19˚CWB		28˚CDB / 20˚CWB		30˚CDB / 22˚CWB		32˚CDB / 24˚CWB	
	˚FDB	˚CDB	CA	SHC	CA	SHC	CA	SHC	CA	SHC	CA	SHC	CA	SHC	CA	SHC
140 (16.0)	68	20.0	15.0	11.2	15.8	11.6	16.7	11.5	17.2	12.1	17.7	12.1	18.7	11.9	19.6	11.6
	73	22.5	14.9	11.1	15.6	11.5	16.5	11.4	17.0	12.0	17.6	12.0	18.6	11.8	19.5	11.5
	77	25.0	14.7	11.0	15.5	11.5	16.3	11.3	16.8	12.0	17.4	11.9	18.4	11.7	19.3	11.5
	82	27.5	14.5	10.9	15.3	11.4	16.2	11.2	16.7	11.9	17.2	11.8	18.2	11.7	19.1	11.4
	86	30.0	14.3	10.8	15.1	11.3	16.0	11.1	16.5	11.8	16.9	11.7	18.0	11.6	18.9	11.3
	91	32.5	14.1	10.7	14.9	11.2	15.8	11.1	16.3	11.7	16.7	11.6	17.8	11.5	18.7	11.3
	95	35.0	13.9	10.6	14.6	11.1	15.6	11.0	16.0	11.6	16.5	11.5	17.6	11.4	18.5	11.2
	100	37.5	13.6	10.5	14.4	10.9	15.4	10.9	15.8	11.5	16.2	11.4	17.4	11.3	18.3	11.1
	104	40.0	13.4	10.3	14.1	10.8	15.2	10.8	15.6	11.4	16.0	11.3	17.2	11.3	18.0	11.0
	110	43.0	13.0	10.2	13.8	10.7	15.0	10.7	15.3	11.3	15.7	11.2	16.9	11.2	17.8	10.9
200 (22.4)	68	20.0	21.1	16.0	22.1	16.7	23.3	16.4	24.1	17.4	24.8	17.3	26.2	17.1	27.5	16.7
	73	22.5	20.8	15.9	21.9	16.5	23.1	16.3	23.8	17.3	24.6	17.2	26.0	17.0	27.2	16.6
	77	25.0	20.6	15.8	21.6	16.4	22.9	16.2	23.6	17.2	24.3	17.1	25.7	16.9	27.0	16.5
	82	27.5	20.4	15.6	21.4	16.3	22.6	16.1	23.3	17.1	24.0	17.0	25.5	16.8	26.7	16.4
	86	30.0	20.1	15.5	21.1	16.2	22.4	16.0	23.0	17.0	23.7	16.9	25.2	16.7	26.4	16.3
	91	32.5	19.8	15.4	20.8	16.0	22.1	15.9	22.8	16.9	23.4	16.8	24.9	16.6	26.1	16.2
	95	35.0	19.4	15.2	20.5	15.9	21.9	15.8	22.4	16.7	23.1	16.6	24.6	16.5	25.9	16.1
	100	37.5	19.1	15.0	20.1	15.7	21.6	15.7	22.2	16.6	22.7	16.5	24.3	16.4	25.6	16.0
	104	40.0	18.7	14.9	19.8	15.6	21.3	15.5	21.8	16.5	22.4	16.3	24.0	16.2	25.3	15.9
	110	43.0	18.3	14.6	19.4	15.4	21.0	15.4	21.4	16.3	21.9	16.2	23.7	16.1	24.9	15.8
250 (28.0)	68	20.0	26.3	19.9	27.7	20.7	29.2	20.4	30.1	21.7	31.0	21.5	32.8	21.2	34.4	20.7
	73	22.5	26.1	19.7	27.4	20.6	28.9	20.3	29.8	21.5	30.7	21.4	32.5	21.1	34.0	20.6
	77	25.0	25.8	19.6	27.1	20.4	28.6	20.2	29.5	21.4	30.4	21.3	32.2	21.0	33.7	20.5
	82	27.5	25.4	19.4	26.7	20.3	28.3	20.0	29.2	21.3	30.0	21.1	31.8	20.8	33.4	20.4
	86	30.0	25.1	19.3	26.4	20.1	28.0	19.9	28.8	21.1	29.6	21.0	31.5	20.7	33.0	20.3
	91	32.5	24.7	19.1	26.0	19.9	27.7	19.8	28.5	21.0	29.3	20.8	31.2	20.6	32.7	20.1
	95	35.0	24.3	18.9	25.6	19.7	27.3	19.6	28.0	20.8	28.8	20.6	30.8	20.4	32.3	20.0
	100	37.5	23.9	18.7	25.2	19.5	27.0	19.5	27.7	20.6	28.4	20.5	30.4	20.3	31.9	19.9
	104	40.0	23.4	18.5	24.7	19.3	26.6	19.3	27.3	20.5	28.0	20.3	30.0	20.2	31.6	19.8
	110	43.0	22.8	18.2	24.2	19.1	26.2	19.1	26.8	20.3	27.4	20.1	29.6	20.0	31.1	19.6

kcal/h = kW x 860, Btu/h = kW x 3,412

A8. Cooling capacity with PUMY-P100,125,140YHMB,VHMB

PEFY-P-VMR-E-L/R

CA : Capacity(kW) SHC : Sensible Heat Capacity(kW)

Model size (Rated kW)	Outdoor air temp.		Indoor air temp.													
			71 ˚FDB / 59˚FWB		73˚FDB / 61˚FWB		77˚FDB / 64˚FWB		81˚FDB / 66˚FWB		82˚FDB / 68˚FWB		86˚FDB / 72˚FWB		90˚FDB / 75˚FWB	
			21.5˚CDB / 15˚CWB		23˚CDB / 16˚CWB		25˚CDB / 18˚CWB		27˚CDB / 19˚CWB		28˚CDB / 20˚CWB		30˚CDB / 22˚CWB		32˚CDB / 24˚CWB	
	˚FDB	˚CDB	CA	SHC	CA	SHC	CA	SHC	CA	SHC	CA	SHC	CA	SHC	CA	SHC
20 (2.2)	68	20.0	2.1	1.7	2.2	1.8	2.3	1.8	2.4	1.9	2.4	1.9	2.6	1.8	2.7	1.8
	73	22.5	2.0	1.7	2.1	1.8	2.3	1.7	2.3	1.9	2.4	1.9	2.6	1.8	2.7	1.8
	77	25.0	2.0	1.7	2.1	1.8	2.2	1.7	2.3	1.9	2.4	1.8	2.5	1.8	2.6	1.8
	82	27.5	2.0	1.7	2.1	1.7	2.2	1.7	2.3	1.8	2.4	1.8	2.5	1.8	2.6	1.8
	86	30.0	2.0	1.7	2.1	1.7	2.2	1.7	2.3	1.8	2.3	1.8	2.5	1.8	2.6	1.8
	91	32.5	1.9	1.6	2.0	1.7	2.2	1.7	2.2	1.8	2.3	1.8	2.4	1.8	2.6	1.8
	95	35.0	1.9	1.6	2.0	1.7	2.1	1.7	2.2	1.8	2.3	1.8	2.4	1.8	2.5	1.8
	100	37.5	1.9	1.6	2.0	1.7	2.1	1.7	2.2	1.8	2.2	1.8	2.4	1.8	2.5	1.7
	104	40.0	1.8	1.6	1.9	1.7	2.1	1.7	2.1	1.8	2.2	1.8	2.4	1.8	2.5	1.7
	110	43.0	1.8	1.6	1.9	1.7	2.1	1.7	2.1	1.8	2.2	1.8	2.3	1.7	2.4	1.7
25 (2.8)	68	20.0	2.6	2.0	2.8	2.1	2.9	2.0	3.0	2.1	3.1	2.1	3.3	2.1	3.4	2.1
	73	22.5	2.6	2.0	2.7	2.0	2.9	2.0	3.0	2.1	3.1	2.1	3.2	2.1	3.4	2.0
	77	25.0	2.6	1.9	2.7	2.0	2.9	2.0	2.9	2.1	3.0	2.1	3.2	2.1	3.4	2.0
	82	27.5	2.5	1.9	2.7	2.0	2.8	2.0	2.9	2.1	3.0	2.1	3.2	2.1	3.3	2.0
	86	30.0	2.5	1.9	2.6	2.0	2.8	2.0	2.9	2.1	3.0	2.1	3.2	2.1	3.3	2.0
	91	32.5	2.5	1.9	2.6	2.0	2.8	2.0	2.8	2.1	2.9	2.1	3.1	2.0	3.3	2.0
	95	35.0	2.4	1.9	2.6	2.0	2.7	1.9	2.8	2.1	2.9	2.0	3.1	2.0	3.2	2.0
	100	37.5	2.4	1.9	2.5	1.9	2.7	1.9	2.8	2.0	2.8	2.0	3.0	2.0	3.2	2.0
	104	40.0	2.3	1.8	2.5	1.9	2.7	1.9	2.7	2.0	2.8	2.0	3.0	2.0	3.2	2.0
	110	43.0	2.3	1.8	2.4	1.9	2.6	1.9	2.7	2.0	2.7	2.0	3.0	2.0	3.1	1.9
32 (3.6)	68	20.0	3.4	2.4	3.6	2.5	3.7	2.5	3.9	2.6	4.0	2.6	4.2	2.6	4.4	2.5
	73	22.5	3.3	2.4	3.5	2.5	3.7	2.5	3.8	2.6	4.0	2.6	4.2	2.5	4.4	2.5
	77	25.0	3.3	2.4	3.5	2.5	3.7	2.4	3.8	2.6	3.9	2.6	4.1	2.5	4.3	2.5
	82	27.5	3.3	2.4	3.4	2.5	3.6	2.4	3.7	2.6	3.9	2.5	4.1	2.5	4.3	2.5
	86	30.0	3.2	2.3	3.4	2.4	3.6	2.4	3.7	2.5	3.8	2.5	4.1	2.5	4.2	2.4
	91	32.5	3.2	2.3	3.3	2.4	3.6	2.4	3.7	2.5	3.8	2.5	4.0	2.5	4.2	2.4
	95	35.0	3.1	2.3	3.3	2.4	3.5	2.4	3.6	2.5	3.7	2.5	4.0	2.5	4.2	2.4
	100	37.5	3.1	2.3	3.2	2.4	3.5	2.4	3.6	2.5	3.7	2.5	3.9	2.4	4.1	2.4
	104	40.0	3.0	2.2	3.2	2.3	3.4	2.3	3.5	2.5	3.6	2.4	3.9	2.4	4.1	2.4
	110	43.0	2.9	2.2	3.1	2.3	3.4	2.3	3.4	2.4	3.5	2.4	3.8	2.4	4.0	2.3

kcal/h = kW x 860, Btu/h = kW x 3,412

CT

A8. Cooling capacity with PUMY-P100,125,140YHMB,VHMB

PEFY-P-VMS1(L)-E

CA : Capacity(kW) SHC : Sensible Heat Capacity(kW)

Model size (Rated kW)	Outdoor air temp.		Indoor air temp.													
			71 ˚FDB / 59˚FWB		73˚FDB / 61˚FWB		77˚FDB / 64˚FWB		81˚FDB / 66˚FWB		82˚FDB / 68˚FWB		86˚FDB / 72˚FWB		90˚FDB / 75˚FWB	
			21.5˚CDB / 15˚CWB		23˚CDB / 16˚CWB		25˚CDB / 18˚CWB		27˚CDB / 19˚CWB		28˚CDB / 20˚CWB		30˚CDB / 22˚CWB		32˚CDB / 24˚CWB	
	˚FDB	˚CDB	CA	SHC	CA	SHC	CA	SHC	CA	SHC	CA	SHC	CA	SHC	CA	SHC
15 (1.7)	68	20.0	1.6	1.5	1.7	1.5	1.8	1.5	1.8	1.6	1.9	1.6	2.0	1.6	2.1	1.6
	73	22.5	1.6	1.5	1.7	1.5	1.8	1.5	1.8	1.6	1.9	1.6	2.0	1.6	2.1	1.6
	77	25.0	1.6	1.4	1.6	1.5	1.7	1.5	1.8	1.6	1.8	1.6	2.0	1.6	2.0	1.6
	82	27.5	1.5	1.4	1.6	1.5	1.7	1.5	1.8	1.6	1.8	1.6	1.9	1.6	2.0	1.6
	86	30.0	1.5	1.4	1.6	1.5	1.7	1.5	1.7	1.6	1.8	1.6	1.9	1.6	2.0	1.5
	91	32.5	1.5	1.4	1.6	1.5	1.7	1.5	1.7	1.6	1.8	1.6	1.9	1.6	2.0	1.5
	95	35.0	1.5	1.4	1.6	1.5	1.7	1.5	1.7	1.6	1.8	1.6	1.9	1.6	2.0	1.5
	100	37.5	1.4	1.4	1.5	1.5	1.6	1.5	1.7	1.6	1.7	1.6	1.8	1.6	1.9	1.5
	104	40.0	1.4	1.4	1.5	1.5	1.6	1.5	1.7	1.6	1.7	1.6	1.8	1.5	1.9	1.5
	110	43.0	1.4	1.4	1.5	1.4	1.6	1.4	1.6	1.6	1.7	1.5	1.8	1.5	1.9	1.5
20 (2.2)	68	20.0	2.1	1.8	2.2	1.9	2.3	1.8	2.4	2.0	2.4	2.0	2.6	1.9	2.7	1.9
	73	22.5	2.0	1.8	2.1	1.8	2.3	1.8	2.3	2.0	2.4	1.9	2.6	1.9	2.7	1.9
	77	25.0	2.0	1.8	2.1	1.8	2.2	1.8	2.3	1.9	2.4	1.9	2.5	1.9	2.6	1.9
	82	27.5	2.0	1.7	2.1	1.8	2.2	1.8	2.3	1.9	2.4	1.9	2.5	1.9	2.6	1.9
	86	30.0	2.0	1.7	2.1	1.8	2.2	1.8	2.3	1.9	2.3	1.9	2.5	1.9	2.6	1.9
	91	32.5	1.9	1.7	2.0	1.8	2.2	1.8	2.2	1.9	2.3	1.9	2.4	1.9	2.6	1.8
	95	35.0	1.9	1.7	2.0	1.8	2.1	1.8	2.2	1.9	2.3	1.9	2.4	1.9	2.5	1.8
	100	37.5	1.9	1.7	2.0	1.8	2.1	1.8	2.2	1.9	2.2	1.9	2.4	1.9	2.5	1.8
	104	40.0	1.8	1.7	1.9	1.8	2.1	1.7	2.1	1.9	2.2	1.9	2.4	1.8	2.5	1.8
	110	43.0	1.8	1.6	1.9	1.7	2.1	1.7	2.1	1.9	2.2	1.8	2.3	1.8	2.4	1.8
25 (2.8)	68	20.0	2.6	2.1	2.8	2.2	2.9	2.2	3.0	2.3	3.1	2.3	3.3	2.3	3.4	2.2
	73	22.5	2.6	2.1	2.7	2.2	2.9	2.2	3.0	2.3	3.1	2.3	3.2	2.3	3.4	2.2
	77	25.0	2.6	2.1	2.7	2.2	2.9	2.2	2.9	2.3	3.0	2.3	3.2	2.3	3.4	2.2
	82	27.5	2.5	2.1	2.7	2.2	2.8	2.2	2.9	2.3	3.0	2.3	3.2	2.3	3.3	2.2
	86	30.0	2.5	2.1	2.6	2.2	2.8	2.1	2.9	2.3	3.0	2.3	3.2	2.2	3.3	2.2
	91	32.5	2.5	2.0	2.6	2.1	2.8	2.1	2.8	2.3	2.9	2.3	3.1	2.2	3.3	2.2
	95	35.0	2.4	2.0	2.6	2.1	2.7	2.1	2.8	2.2	2.9	2.2	3.1	2.2	3.2	2.2
	100	37.5	2.4	2.0	2.5	2.1	2.7	2.1	2.8	2.2	2.8	2.2	3.0	2.2	3.2	2.2
	104	40.0	2.3	2.0	2.5	2.1	2.7	2.1	2.7	2.2	2.8	2.2	3.0	2.2	3.2	2.1
	110	43.0	2.3	2.0	2.4	2.1	2.6	2.1	2.7	2.2	2.7	2.2	3.0	2.2	3.1	2.1
32 (3.6)	68	20.0	3.4	2.6	3.6	2.7	3.7	2.6	3.9	2.8	4.0	2.8	4.2	2.7	4.4	2.7
	73	22.5	3.3	2.6	3.5	2.7	3.7	2.6	3.8	2.8	4.0	2.8	4.2	2.7	4.4	2.7
	77	25.0	3.3	2.5	3.5	2.6	3.7	2.6	3.8	2.8	3.9	2.8	4.1	2.7	4.3	2.7
	82	27.5	3.3	2.5	3.4	2.6	3.6	2.6	3.7	2.8	3.9	2.7	4.1	2.7	4.3	2.6
	86	30.0	3.2	2.5	3.4	2.6	3.6	2.6	3.7	2.7	3.8	2.7	4.1	2.7	4.2	2.6
	91	32.5	3.2	2.5	3.3	2.6	3.6	2.6	3.7	2.7	3.8	2.7	4.0	2.7	4.2	2.6
	95	35.0	3.1	2.4	3.3	2.6	3.5	2.5	3.6	2.7	3.7	2.7	4.0	2.6	4.2	2.6
	100	37.5	3.1	2.4	3.2	2.5	3.5	2.5	3.6	2.7	3.7	2.6	3.9	2.6	4.1	2.6
	104	40.0	3.0	2.4	3.2	2.5	3.4	2.5	3.5	2.6	3.6	2.6	3.9	2.6	4.1	2.6
	110	43.0	2.9	2.4	3.1	2.5	3.4	2.5	3.4	2.6	3.5	2.6	3.8	2.6	4.0	2.5
40 (4.5)	68	20.0	4.2	3.1	4.4	3.3	4.7	3.2	4.8	3.4	5.0	3.4	5.3	3.3	5.5	3.3
	73	22.5	4.2	3.1	4.4	3.2	4.6	3.2	4.8	3.4	4.9	3.4	5.2	3.3	5.5	3.2
	77	25.0	4.1	3.1	4.3	3.2	4.6	3.2	4.7	3.4	4.9	3.3	5.2	3.3	5.4	3.2
	82	27.5	4.1	3.1	4.3	3.2	4.5	3.1	4.7	3.3	4.8	3.3	5.1	3.3	5.4	3.2
	86	30.0	4.0	3.0	4.2	3.2	4.5	3.1	4.6	3.3	4.8	3.3	5.1	3.2	5.3	3.2
	91	32.5	4.0	3.0	4.2	3.1	4.4	3.1	4.6	3.3	4.7	3.3	5.0	3.2	5.3	3.2
	95	35.0	3.9	3.0	4.1	3.1	4.4	3.1	4.5	3.2	4.6	3.2	4.9	3.2	5.2	3.1
	100	37.5	3.8	2.9	4.0	3.1	4.3	3.1	4.5	3.2	4.6	3.2	4.9	3.2	5.1	3.1
	104	40.0	3.8	2.9	4.0	3.0	4.3	3.0	4.4	3.2	4.5	3.2	4.8	3.2	5.1	3.1
	110	43.0	3.7	2.8	3.9	3.0	4.2	3.0	4.3	3.2	4.4	3.1	4.8	3.1	5.0	3.1
50 (5.6)	68	20.0	5.3	3.8	5.5	4.0	5.8	3.9	6.0	4.1	6.2	4.1	6.6	4.1	6.9	4.0
	73	22.5	5.2	3.8	5.5	4.0	5.8	3.9	6.0	4.1	6.1	4.1	6.5	4.0	6.8	3.9
	77	25.0	5.2	3.8	5.4	3.9	5.7	3.9	5.9	4.1	6.1	4.1	6.4	4.0	6.7	3.9
	82	27.5	5.1	3.7	5.3	3.9	5.7	3.8	5.8	4.1	6.0	4.0	6.4	4.0	6.7	3.9
	86	30.0	5.0	3.7	5.3	3.9	5.6	3.8	5.8	4.0	5.9	4.0	6.3	4.0	6.6	3.9
	91	32.5	4.9	3.7	5.2	3.8	5.5	3.8	5.7	4.0	5.9	4.0	6.2	3.9	6.5	3.8
	95	35.0	4.9	3.6	5.1	3.8	5.5	3.8	5.6	4.0	5.8	3.9	6.2	3.9	6.5	3.8
	100	37.5	4.8	3.6	5.0	3.7	5.4	3.7	5.5	3.9	5.7	3.9	6.1	3.9	6.4	3.8
	104	40.0	4.7	3.5	4.9	3.7	5.3	3.7	5.5	3.9	5.6	3.9	6.0	3.8	6.3	3.8
	110	43.0	4.6	3.5	4.8	3.6	5.2	3.7	5.4	3.9	5.5	3.8	5.9	3.8	6.2	3.7
63 (7.1)	68	20.0	6.7	4.8	7.0	5.0	7.4	5.0	7.6	5.2	7.9	5.2	8.3	5.1	8.7	5.0
	73	22.5	6.6	4.8	6.9	5.0	7.3	4.9	7.6	5.2	7.8	5.2	8.2	5.1	8.6	5.0
	77	25.0	6.5	4.8	6.9	5.0	7.2	4.9	7.5	5.2	7.7	5.1	8.2	5.1	8.5	5.0
	82	27.5	6.5	4.7	6.8	4.9	7.2	4.9	7.4	5.1	7.6	5.1	8.1	5.0	8.5	4.9
	86	30.0	6.4	4.7	6.7	4.9	7.1	4.8	7.3	5.1	7.5	5.1	8.0	5.0	8.4	4.9
	91	32.5	6.3	4.6	6.6	4.8	7.0	4.8	7.2	5.1	7.4	5.0	7.9	5.0	8.3	4.9
	95	35.0	6.2	4.6	6.5	4.8	6.9	4.8	7.1	5.0	7.3	5.0	7.8	4.9	8.2	4.8
	100	37.5	6.1	4.5	6.4	4.7	6.8	4.7	7.0	5.0	7.2	4.9	7.7	4.9	8.1	4.8
	104	40.0	5.9	4.5	6.3	4.7	6.8	4.7	6.9	4.9	7.1	4.9	7.6	4.9	8.0	4.8
	110	43.0	5.8	4.4	6.1	4.6	6.6	4.6	6.8	4.9	6.9	4.8	7.5	4.8	7.9	4.7

kcal/h = kW x 860, Btu/h = kW x 3,412

B1. Cooling capacity with PUHY-P200, 250YHM/PUHY-EP200, 250YHM PURY-P200, 250YHM/PURY-EP200, 250YHM

PEFY-P-VMA(L)-E

CA : Capacity(kW) SHC : Sensible Heat Capacity(kW)

Model size (Rated kW)	Outdoor air temp.		Indoor air temp.													
			71 ˚FDB / 59˚FWB		73˚FDB / 61˚FWB		77˚FDB / 64˚FWB		81˚FDB / 66˚FWB		82˚FDB / 68˚FWB		86˚FDB / 72˚FWB		90˚FDB / 75˚FWB	
			21.5˚CDB / 15˚CWB		23˚CDB / 16˚CWB		25˚CDB / 18˚CWB		27˚CDB / 19˚CWB		28˚CDB / 20˚CWB		30˚CDB / 22˚CWB		32˚CDB / 24˚CWB	
	˚FDB	˚CDB	CA	SHC	CA	SHC	CA	SHC	CA	SHC	CA	SHC	CA	SHC	CA	SHC
20 (2.2)	68	20.0	2.1	1.9	2.2	1.9	2.3	1.9	2.4	2.1	2.5	2.0	2.6	2.0	2.8	2.0
	73	22.5	2.1	1.9	2.2	1.9	2.3	1.9	2.4	2.1	2.5	2.0	2.6	2.0	2.8	2.0
	77	25.0	2.1	1.9	2.2	1.9	2.3	1.9	2.4	2.1	2.4	2.0	2.6	2.0	2.7	2.0
	82	27.5	2.1	1.9	2.1	1.9	2.3	1.9	2.3	2.0	2.4	2.0	2.5	2.0	2.7	2.0
	86	30.0	2.0	1.8	2.1	1.9	2.2	1.9	2.3	2.0	2.3	2.0	2.5	2.0	2.6	2.0
	91	32.5	2.0	1.8	2.1	1.9	2.2	1.9	2.2	2.0	2.3	2.0	2.4	2.0	2.6	1.9
	95	35.0	2.0	1.8	2.0	1.9	2.1	1.8	2.2	2.0	2.3	2.0	2.4	1.9	2.5	1.9
	100	37.5	1.9	1.8	2.0	1.8	2.1	1.8	2.1	2.0	2.2	2.0	2.3	1.9	2.5	1.9
	104	40.0	1.9	1.8	1.9	1.8	2.1	1.8	2.1	2.0	2.2	1.9	2.3	1.9	2.4	1.9
	110	43.0	1.8	1.7	1.9	1.8	2.0	1.8	2.0	1.9	2.1	1.9	2.2	1.9	2.4	1.9
25 (2.8)	68	20.0	2.7	2.1	2.8	2.2	2.9	2.2	3.0	2.3	3.1	2.3	3.3	2.2	3.5	2.2
	73	22.5	2.7	2.1	2.8	2.2	2.9	2.2	3.0	2.3	3.1	2.3	3.3	2.2	3.5	2.2
	77	25.0	2.7	2.1	2.8	2.2	2.9	2.2	3.0	2.3	3.1	2.3	3.3	2.2	3.5	2.2
	82	27.5	2.6	2.1	2.7	2.2	2.9	2.1	3.0	2.3	3.1	2.3	3.2	2.2	3.4	2.2
	86	30.0	2.6	2.1	2.7	2.1	2.8	2.1	2.9	2.2	3.0	2.2	3.1	2.2	3.3	2.2
	91	32.5	2.5	2.0	2.6	2.1	2.8	2.1	2.8	2.2	2.9	2.2	3.1	2.2	3.3	2.1
	95	35.0	2.5	2.0	2.6	2.1	2.7	2.1	2.8	2.2	2.9	2.2	3.0	2.1	3.2	2.1
	100	37.5	2.5	2.0	2.5	2.1	2.7	2.0	2.7	2.2	2.8	2.2	3.0	2.1	3.1	2.1
	104	40.0	2.4	2.0	2.5	2.0	2.6	2.0	2.7	2.2	2.8	2.1	2.9	2.1	3.1	2.1
	110	43.0	2.4	2.0	2.4	2.0	2.6	2.0	2.6	2.1	2.7	2.1	2.8	2.1	3.0	2.0
32 (3.6)	68	20.0	3.4	2.5	3.5	2.6	3.8	2.6	3.9	2.8	4.0	2.7	4.2	2.7	4.6	2.7
	73	22.5	3.4	2.5	3.5	2.6	3.8	2.6	3.9	2.8	4.0	2.7	4.2	2.7	4.6	2.7
	77	25.0	3.4	2.5	3.5	2.6	3.8	2.6	3.9	2.8	4.0	2.7	4.2	2.7	4.5	2.7
	82	27.5	3.4	2.5	3.5	2.6	3.7	2.6	3.8	2.7	3.9	2.7	4.1	2.7	4.4	2.6
	86	30.0	3.3	2.5	3.4	2.6	3.6	2.6	3.7	2.7	3.8	2.7	4.0	2.6	4.3	2.6
	91	32.5	3.3	2.5	3.4	2.6	3.6	2.5	3.7	2.7	3.8	2.6	4.0	2.6	4.2	2.6
	95	35.0	3.2	2.5	3.3	2.5	3.5	2.5	3.6	2.6	3.7	2.6	3.9	2.6	4.1	2.5
	100	37.5	3.2	2.4	3.2	2.5	3.4	2.5	3.5	2.6	3.6	2.6	3.8	2.5	4.0	2.5
	104	40.0	3.1	2.4	3.2	2.5	3.4	2.4	3.5	2.6	3.6	2.6	3.7	2.5	4.0	2.5
	110	43.0	3.0	2.4	3.1	2.4	3.3	2.4	3.3	2.5	3.5	2.5	3.6	2.5	3.9	2.4
40 (4.5)	68	20.0	4.3	3.4	4.4	3.6	4.7	3.5	4.9	3.8	5.0	3.7	5.3	3.7	5.7	3.7
	73	22.5	4.3	3.4	4.4	3.6	4.7	3.5	4.9	3.8	5.0	3.7	5.3	3.7	5.7	3.7
	77	25.0	4.3	3.4	4.4	3.6	4.7	3.5	4.9	3.8	5.0	3.7	5.3	3.7	5.6	3.6
	82	27.5	4.3	3.4	4.4	3.5	4.6	3.5	4.8	3.7	4.9	3.7	5.2	3.6	5.5	3.6
	86	30.0	4.2	3.4	4.3	3.5	4.6	3.5	4.7	3.7	4.8	3.6	5.0	3.6	5.4	3.5
	91	32.5	4.1	3.3	4.2	3.5	4.5	3.4	4.6	3.6	4.7	3.6	5.0	3.6	5.3	3.5
	95	35.0	4.0	3.3	4.1	3.4	4.4	3.4	4.5	3.6	4.6	3.6	4.9	3.5	5.2	3.5
	100	37.5	3.9	3.3	4.1	3.4	4.3	3.3	4.4	3.6	4.5	3.5	4.8	3.5	5.0	3.4
	104	40.0	3.9	3.2	4.0	3.3	4.2	3.3	4.3	3.5	4.5	3.5	4.7	3.4	5.0	3.4
	110	43.0	3.8	3.2	3.9	3.3	4.1	3.3	4.2	3.5	4.3	3.5	4.5	3.4	4.8	3.4
50 (5.6)	68	20.0	5.3	4.2	5.5	4.4	5.9	4.3	6.0	4.6	6.2	4.6	6.6	4.5	7.1	4.5
	73	22.5	5.3	4.2	5.5	4.4	5.9	4.3	6.0	4.6	6.2	4.6	6.6	4.5	7.1	4.5
	77	25.0	5.3	4.2	5.5	4.4	5.9	4.3	6.0	4.6	6.2	4.6	6.6	4.5	6.9	4.4
	82	27.5	5.3	4.2	5.5	4.3	5.8	4.3	5.9	4.6	6.1	4.5	6.4	4.5	6.8	4.4
	86	30.0	5.2	4.2	5.3	4.3	5.7	4.2	5.8	4.5	6.0	4.5	6.3	4.4	6.7	4.4
	91	32.5	5.1	4.1	5.3	4.3	5.5	4.2	5.7	4.5	5.9	4.4	6.2	4.4	6.6	4.3
	95	35.0	5.0	4.1	5.2	4.2	5.5	4.2	5.6	4.4	5.7	4.4	6.0	4.3	6.4	4.3
	100	37.5	4.9	4.0	5.0	4.2	5.3	4.1	5.5	4.4	5.6	4.4	5.9	4.3	6.3	4.2
	104	40.0	4.8	4.0	5.0	4.1	5.3	4.1	5.4	4.3	5.5	4.3	5.8	4.2	6.2	4.2
	110	43.0	4.7	3.9	4.8	4.1	5.1	4.0	5.2	4.3	5.4	4.3	5.7	4.2	6.0	4.1
63 (7.1)	68	20.0	6.7	5.2	7.0	5.4	7.5	5.4	7.7	5.7	7.9	5.7	8.4	5.6	9.0	5.5
	73	22.5	6.7	5.2	7.0	5.4	7.5	5.4	7.7	5.7	7.9	5.7	8.4	5.6	9.0	5.5
	77	25.0	6.7	5.2	7.0	5.4	7.5	5.4	7.7	5.7	7.8	5.6	8.3	5.6	8.8	5.5
	82	27.5	6.7	5.2	6.9	5.4	7.3	5.3	7.5	5.6	7.7	5.6	8.1	5.5	8.7	5.4
	86	30.0	6.6	5.2	6.8	5.3	7.2	5.2	7.4	5.6	7.6	5.5	8.0	5.4	8.5	5.4
	91	32.5	6.5	5.1	6.7	5.3	7.0	5.2	7.2	5.5	7.4	5.5	7.8	5.4	8.3	5.3
	95	35.0	6.4	5.0	6.5	5.2	6.9	5.1	7.1	5.5	7.3	5.4	7.7	5.3	8.1	5.2
	100	37.5	6.2	5.0	6.4	5.1	6.8	5.1	6.9	5.4	7.1	5.4	7.5	5.3	8.0	5.2
	104	40.0	6.1	4.9	6.3	5.1	6.7	5.0	6.8	5.3	7.0	5.3	7.3	5.2	7.8	5.1
	110	43.0	6.0	4.9	6.1	5.0	6.5	5.0	6.6	5.3	6.8	5.2	7.2	5.1	7.6	5.1
71 (8.0)	68	20.0	7.6	5.7	7.9	5.9	8.4	5.8	8.6	6.2	8.9	6.1	9.4	6.1	10.1	6.0
	73	22.5	7.6	5.7	7.9	5.9	8.4	5.8	8.6	6.2	8.9	6.1	9.4	6.1	10.1	6.0
	77	25.0	7.6	5.7	7.9	5.9	8.4	5.8	8.6	6.2	8.8	6.1	9.4	6.0	9.9	5.9
	82	27.5	7.6	5.7	7.8	5.8	8.2	5.8	8.5	6.1	8.7	6.1	9.2	5.9	9.8	5.9
	86	30.0	7.4	5.6	7.6	5.8	8.1	5.7	8.3	6.0	8.5	6.0	9.0	5.9	9.6	5.8
	91	32.5	7.3	5.5	7.5	5.7	7.9	5.6	8.1	5.9	8.4	5.9	8.8	5.8	9.4	5.7
	95	35.0	7.2	5.5	7.4	5.6	7.8	5.6	8.0	5.9	8.2	5.8	8.6	5.7	9.2	5.7
	100	37.5	7.0	5.4	7.2	5.6	7.6	5.5	7.8	5.8	8.0	5.8	8.5	5.7	9.0	5.6
	104	40.0	6.9	5.3	7.1	5.5	7.5	5.4	7.7	5.8	7.9	5.7	8.3	5.6	8.8	5.5
	110	43.0	6.7	5.3	6.9	5.4	7.3	5.4	7.4	5.7	7.7	5.6	8.1	5.5	8.6	5.5

kcal/h = kW x 860, Btu/h = kW x 3,412

CT

B1. Cooling capacity with PUHY-P200, 250YHM/PUHY-EP200, 250YHM PURY-P200, 250YHM/PURY-EP200, 250YHM

PEFY-P-VMA(L)-E

CA : Capacity(kW) SHC : Sensible Heat Capacity(kW)

Model size (Rated kW)	Outdoor air temp.		Indoor air temp.													
			71 ˚FDB / 59˚FWB		73˚FDB / 61˚FWB		77˚FDB / 64˚FWB		81˚FDB / 66˚FWB		82˚FDB / 68˚FWB		86˚FDB / 72˚FWB		90˚FDB / 75˚FWB	
			21.5˚CDB / 15˚CWB		23˚CDB / 16˚CWB		25˚CDB / 18˚CWB		27˚CDB / 19˚CWB		28˚CDB / 20˚CWB		30˚CDB / 22˚CWB		32˚CDB / 24˚CWB	
	˚FDB	˚CDB	CA	SHC	CA	SHC	CA	SHC	CA	SHC	CA	SHC	CA	SHC	CA	SHC
80 (9.0)	68	20.0	8.6	6.1	8.9	6.3	9.5	6.3	9.7	6.6	10.0	6.6	10.6	6.5	11.4	6.4
	73	22.5	8.6	6.1	8.9	6.3	9.5	6.3	9.7	6.6	10.0	6.6	10.6	6.5	11.4	6.4
	77	25.0	8.6	6.1	8.9	6.3	9.5	6.3	9.7	6.6	9.9	6.5	10.5	6.4	11.2	6.3
	82	27.5	8.5	6.1	8.8	6.3	9.3	6.2	9.5	6.5	9.8	6.5	10.3	6.4	11.0	6.3
	86	30.0	8.4	6.0	8.6	6.2	9.1	6.1	9.4	6.4	9.6	6.4	10.1	6.3	10.8	6.2
	91	32.5	8.2	5.9	8.5	6.1	8.9	6.0	9.1	6.3	9.4	6.3	9.9	6.2	10.5	6.1
	95	35.0	8.1	5.9	8.3	6.0	8.8	6.0	9.0	6.3	9.2	6.2	9.7	6.1	10.3	6.0
	100	37.5	7.9	5.8	8.1	5.9	8.6	5.9	8.8	6.2	9.0	6.1	9.5	6.0	10.1	5.9
	104	40.0	7.7	5.7	8.0	5.9	8.5	5.8	8.6	6.1	8.9	6.1	9.3	6.0	9.9	5.9
	110	43.0	7.6	5.6	7.8	5.8	8.2	5.7	8.4	6.0	8.6	6.0	9.1	5.9	9.6	5.8
100 (11.2)	68	20.0	10.6	8.4	11.0	8.7	11.8	8.6	12.1	9.2	12.5	9.1	13.2	9.0	14.2	8.9
	73	22.5	10.6	8.4	11.0	8.7	11.8	8.6	12.1	9.2	12.5	9.1	13.2	9.0	14.2	8.9
	77	25.0	10.6	8.4	11.0	8.7	11.8	8.6	12.1	9.2	12.4	9.1	13.1	9.0	13.9	8.8
	82	27.5	10.6	8.4	10.9	8.7	11.5	8.5	11.9	9.1	12.2	9.0	12.8	8.9	13.7	8.8
	86	30.0	10.4	8.3	10.7	8.5	11.3	8.5	11.6	9.0	11.9	8.9	12.5	8.8	13.4	8.7
	91	32.5	10.2	8.2	10.5	8.5	11.1	8.4	11.4	8.9	11.7	8.8	12.3	8.7	13.1	8.6
	95	35.0	10.0	8.1	10.3	8.4	10.9	8.3	11.2	8.8	11.5	8.7	12.1	8.6	12.8	8.5
	100	37.5	9.8	8.0	10.1	8.3	10.7	8.2	10.9	8.7	11.3	8.7	11.9	8.5	12.5	8.4
	104	40.0	9.6	7.9	9.9	8.2	10.5	8.1	10.8	8.6	11.1	8.6	11.6	8.4	12.3	8.3
	110	43.0	9.4	7.8	9.7	8.1	10.2	8.0	10.4	8.5	10.8	8.5	11.3	8.3	12.0	8.2
125 (14.0)	68	20.0	13.3	10.2	13.8	10.6	14.7	10.5	15.1	11.1	15.6	11.1	16.5	10.9	17.7	10.8
	73	22.5	13.3	10.2	13.8	10.6	14.7	10.5	15.1	11.1	15.6	11.1	16.5	10.9	17.7	10.8
	77	25.0	13.3	10.2	13.8	10.6	14.7	10.5	15.1	11.1	15.5	11.0	16.4	10.9	17.4	10.7
	82	27.5	13.2	10.2	13.7	10.5	14.4	10.4	14.8	11.0	15.3	11.0	16.0	10.8	17.1	10.6
	86	30.0	13.0	10.1	13.4	10.4	14.2	10.3	14.6	10.9	14.9	10.8	15.7	10.6	16.7	10.5
	91	32.5	12.7	10.0	13.2	10.3	13.9	10.1	14.2	10.8	14.6	10.7	15.4	10.5	16.4	10.4
	95	35.0	12.5	9.9	12.9	10.2	13.7	10.1	14.0	10.7	14.4	10.6	15.1	10.4	16.0	10.3
	100	37.5	12.3	9.7	12.6	10.0	13.4	9.9	13.7	10.5	14.1	10.5	14.8	10.3	15.7	10.1
	104	40.0	12.0	9.6	12.4	9.9	13.2	9.8	13.4	10.4	13.9	10.4	14.5	10.2	15.4	10.0
	110	43.0	11.8	9.5	12.1	9.8	12.8	9.7	13.0	10.3	13.4	10.2	14.1	10.1	15.0	9.9
140 (16.0)	68	20.0	15.2	11.6	15.8	12.0	16.8	11.9	17.3	12.6	17.8	12.5	18.9	12.3	20.2	12.2
	73	22.5	15.2	11.6	15.8	12.0	16.8	11.9	17.3	12.6	17.8	12.5	18.9	12.3	20.2	12.2
	77	25.0	15.2	11.6	15.8	12.0	16.8	11.9	17.3	12.6	17.7	12.5	18.7	12.3	19.8	12.1
	82	27.5	15.1	11.5	15.6	11.9	16.5	11.7	17.0	12.4	17.4	12.4	18.3	12.1	19.5	12.0
	86	30.0	14.9	11.4	15.3	11.7	16.2	11.6	16.6	12.3	17.0	12.2	17.9	12.0	19.1	11.8
	91	32.5	14.6	11.3	15.0	11.6	15.8	11.5	16.2	12.1	16.7	12.1	17.6	11.9	18.7	11.7
	95	35.0	14.3	11.1	14.7	11.5	15.6	11.4	16.0	12.0	16.4	11.9	17.3	11.7	18.3	11.6
	100	37.5	14.0	11.0	14.4	11.3	15.3	11.2	15.6	11.9	16.1	11.8	17.0	11.6	17.9	11.4
	104	40.0	13.8	10.9	14.2	11.2	15.0	11.1	15.4	11.8	15.8	11.7	16.6	11.5	17.6	11.3
	110	43.0	13.4	10.7	13.8	11.1	14.6	10.9	14.9	11.6	15.4	11.5	16.2	11.3	17.1	11.2

kcal/h = kW x 860, Btu/h = kW x 3,412

B2. Cooling capacity with PUHY-P300-400YHM /PUHY-EP300, 400Y(S)HM PURY-P300-400YHM /PURY-EP300, 400Y(S)HM

PEFY-P-VMA(L)-E

CA : Capacity(kW) SHC : Sensible Heat Capacity(kW)

Model size (Rated kW)	Outdoor air temp.		Indoor air temp.													
			71 ˚FDB / 59˚FWB		73˚FDB / 61˚FWB		77˚FDB / 64˚FWB		81˚FDB / 66˚FWB		82˚FDB / 68˚FWB		86˚FDB / 72˚FWB		90˚FDB / 75˚FWB	
			21.5˚CDB / 15˚CWB		23˚CDB / 16˚CWB		25˚CDB / 18˚CWB		27˚CDB / 19˚CWB		28˚CDB / 20˚CWB		30˚CDB / 22˚CWB		32˚CDB / 24˚CWB	
	˚FDB	˚CDB	CA	SHC	CA	SHC	CA	SHC	CA	SHC	CA	SHC	CA	SHC	CA	SHC
20 (2.2)	68	20.0	2.1	1.9	2.2	2.0	2.4	1.9	2.5	2.1	2.5	2.1	2.7	2.1	2.9	2.0
	73	22.5	2.1	1.9	2.2	1.9	2.3	1.9	2.4	2.1	2.5	2.1	2.6	2.0	2.8	2.0
	77	25.0	2.1	1.9	2.2	1.9	2.3	1.9	2.4	2.1	2.4	2.0	2.6	2.0	2.8	2.0
	82	27.5	2.1	1.8	2.1	1.9	2.3	1.9	2.3	2.0	2.4	2.0	2.5	2.0	2.7	2.0
	86	30.0	2.0	1.8	2.1	1.9	2.2	1.9	2.3	2.0	2.4	2.0	2.5	2.0	2.6	2.0
	91	32.5	2.0	1.8	2.0	1.9	2.2	1.9	2.2	2.0	2.3	2.0	2.4	2.0	2.6	1.9
	95	35.0	2.0	1.8	2.0	1.9	2.1	1.8	2.2	2.0	2.3	2.0	2.4	2.0	2.5	1.9
	100	37.5	1.9	1.8	1.9	1.8	2.1	1.8	2.1	2.0	2.2	2.0	2.4	1.9	2.5	1.9
	104	40.0	1.9	1.8	1.9	1.8	2.0	1.8	2.1	2.0	2.4	2.0	2.3	1.9	2.4	1.9
	110	43.0	1.8	1.7	1.8	1.8	2.0	1.8	2.0	1.9	2.1	1.9	2.2	1.9	2.4	1.9
25 (2.8)	68	20.0	2.7	2.1	2.8	2.2	3.0	2.2	3.1	2.3	3.2	2.3	3.4	2.3	3.6	2.3
	73	22.5	2.7	2.1	2.8	2.2	3.0	2.2	3.1	2.3	3.2	2.3	3.4	2.3	3.6	2.2
	77	25.0	2.7	2.1	2.7	2.2	2.9	2.1	3.0	2.3	3.1	2.3	3.3	2.2	3.5	2.2
	82	27.5	2.6	2.1	2.7	2.1	2.9	2.1	3.0	2.3	3.1	2.3	3.2	2.2	3.4	2.2
	86	30.0	2.6	2.1	2.6	2.1	2.8	2.1	2.9	2.2	3.0	2.2	3.2	2.2	3.4	2.2
	91	32.5	2.5	2.0	2.6	2.1	2.8	2.1	2.9	2.2	2.9	2.2	3.1	2.2	3.3	2.1
	95	35.0	2.5	2.0	2.5	2.1	2.7	2.0	2.8	2.2	2.9	2.2	3.1	2.2	3.2	2.1
	100	37.5	2.5	2.0	2.5	2.0	2.6	2.0	2.7	2.2	2.8	2.2	3.0	2.1	3.2	2.1
	104	40.0	2.4	2.0	2.4	2.0	2.6	2.0	2.7	2.1	3.0	2.2	2.9	2.1	3.1	2.1
	110	43.0	2.4	2.0	2.4	2.0	2.5	2.0	2.6	2.1	2.7	2.1	2.8	2.1	3.0	2.0
32 (3.6)	68	20.0	3.5	2.6	3.6	2.7	3.9	2.7	4.0	2.8	4.2	2.8	4.4	2.8	4.7	2.7
	73	22.5	3.5	2.6	3.6	2.7	3.8	2.6	4.0	2.8	4.1	2.8	4.3	2.7	4.6	2.7
	77	25.0	3.4	2.6	3.5	2.6	3.8	2.6	3.9	2.8	4.0	2.7	4.2	2.7	4.5	2.7
	82	27.5	3.4	2.5	3.5	2.6	3.7	2.6	3.8	2.7	3.9	2.7	4.2	2.7	4.4	2.6
	86	30.0	3.3	2.5	3.4	2.6	3.6	2.5	3.7	2.7	3.9	2.7	4.1	2.7	4.3	2.6
	91	32.5	3.3	2.5	3.3	2.5	3.5	2.5	3.7	2.7	3.8	2.7	4.0	2.6	4.2	2.6
	95	35.0	3.2	2.4	3.3	2.5	3.5	2.5	3.6	2.6	3.7	2.6	3.9	2.6	4.2	2.5
	100	37.5	3.2	2.4	3.2	2.5	3.4	2.4	3.5	2.6	3.6	2.6	3.9	2.6	4.1	2.5
	104	40.0	3.1	2.4	3.1	2.4	3.3	2.4	3.4	2.6	3.9	2.7	3.8	2.5	4.0	2.5
	110	43.0	3.0	2.4	3.0	2.4	3.2	2.4	3.3	2.5	3.4	2.5	3.7	2.5	3.9	2.4
40 (4.5)	68	20.0	4.4	3.5	4.5	3.6	4.9	3.6	5.0	3.8	5.2	3.8	5.5	3.8	5.9	3.7
	73	22.5	4.3	3.5	4.5	3.6	4.8	3.6	5.0	3.8	5.1	3.8	5.4	3.7	5.7	3.7
	77	25.0	4.3	3.4	4.4	3.5	4.7	3.5	4.9	3.8	5.0	3.7	5.3	3.7	5.6	3.6
	82	27.5	4.2	3.4	4.3	3.5	4.6	3.5	4.8	3.7	4.9	3.7	5.2	3.6	5.5	3.6
	86	30.0	4.1	3.4	4.2	3.5	4.5	3.4	4.7	3.7	4.8	3.7	5.1	3.6	5.4	3.6
	91	32.5	4.1	3.3	4.2	3.4	4.4	3.4	4.6	3.6	4.7	3.6	5.0	3.6	5.3	3.5
	95	35.0	4.0	3.3	4.1	3.4	4.3	3.4	4.5	3.6	4.6	3.6	4.9	3.5	5.2	3.5
	100	37.5	4.0	3.3	4.0	3.3	4.3	3.3	4.4	3.6	4.5	3.6	4.8	3.5	5.1	3.5
	104	40.0	3.9	3.2	3.9	3.3	4.2	3.3	4.3	3.5	4.9	3.7	4.7	3.5	5.0	3.4
	110	43.0	3.8	3.2	3.8	3.3	4.1	3.2	4.2	3.5	4.3	3.5	4.6	3.4	4.8	3.4
50 (5.6)	68	20.0	5.4	4.3	5.6	4.4	6.0	4.4	6.3	4.7	6.5	4.7	6.9	4.6	7.3	4.6
	73	22.5	5.4	4.3	5.6	4.4	6.0	4.4	6.2	4.7	6.4	4.6	6.7	4.6	7.1	4.5
	77	25.0	5.3	4.2	5.5	4.4	5.9	4.3	6.0	4.6	6.2	4.6	6.6	4.5	7.0	4.5
	82	27.5	5.2	4.2	5.4	4.3	5.7	4.3	5.9	4.6	6.1	4.5	6.5	4.5	6.9	4.4
	86	30.0	5.2	4.1	5.3	4.3	5.6	4.2	5.8	4.5	6.0	4.5	6.4	4.4	6.7	4.4
	91	32.5	5.1	4.1	5.2	4.2	5.5	4.2	5.7	4.5	5.9	4.5	6.2	4.4	6.6	4.3
	95	35.0	5.0	4.1	5.1	4.2	5.4	4.1	5.6	4.4	5.8	4.4	6.1	4.3	6.5	4.3
	100	37.5	4.9	4.0	5.0	4.1	5.3	4.1	5.5	4.4	5.7	4.4	6.0	4.3	6.3	4.2
	104	40.0	4.8	4.0	4.8	4.1	5.2	4.0	5.3	4.3	6.1	4.5	5.9	4.3	6.2	4.2
	110	43.0	4.7	3.9	4.7	4.0	5.0	4.0	5.2	4.3	5.3	4.2	5.7	4.2	6.0	4.1
63 (7.1)	68	20.0	6.9	5.3	7.1	5.5	7.7	5.5	8.0	5.8	8.2	5.8	8.7	5.7	9.2	5.6
	73	22.5	6.9	5.3	7.1	5.5	7.6	5.4	7.8	5.8	8.1	5.7	8.5	5.6	9.1	5.6
	77	25.0	6.8	5.2	7.0	5.4	7.4	5.4	7.7	5.7	7.9	5.7	8.4	5.6	8.9	5.5
	82	27.5	6.6	5.2	6.8	5.3	7.3	5.3	7.5	5.6	7.8	5.6	8.2	5.5	8.7	5.4
	86	30.0	6.5	5.1	6.7	5.3	7.1	5.2	7.4	5.6	7.6	5.5	8.1	5.5	8.5	5.4
	91	32.5	6.4	5.1	6.6	5.2	7.0	5.2	7.2	5.5	7.5	5.5	7.9	5.4	8.4	5.3
	95	35.0	6.3	5.0	6.4	5.1	6.8	5.1	7.1	5.5	7.3	5.4	7.7	5.3	8.2	5.3
	100	37.5	6.2	5.0	6.3	5.1	6.7	5.0	6.9	5.4	7.2	5.4	7.6	5.3	8.0	5.2
	104	40.0	6.1	4.9	6.1	5.0	6.6	5.0	6.8	5.3	7.7	5.6	7.4	5.2	7.8	5.1
	110	43.0	6.0	4.9	6.0	4.9	6.4	4.9	6.6	5.3	6.8	5.2	7.2	5.2	7.6	5.1
71 (8.0)	68	20.0	7.8	5.8	8.0	6.0	8.6	5.9	9.0	6.3	9.2	6.3	9.8	6.2	10.4	6.1
	73	22.5	7.7	5.7	8.0	5.9	8.5	5.9	8.8	6.2	9.1	6.2	9.6	6.1	10.2	6.0
	77	25.0	7.6	5.7	7.8	5.9	8.4	5.8	8.6	6.2	8.9	6.1	9.4	6.1	10.0	6.0
	82	27.5	7.5	5.6	7.7	5.8	8.2	5.7	8.5	6.1	8.7	6.1	9.3	6.0	9.8	5.9
	86	30.0	7.4	5.6	7.5	5.7	8.0	5.7	8.3	6.0	8.6	6.0	9.1	5.9	9.6	5.8
	91	32.5	7.2	5.5	7.4	5.6	7.9	5.6	8.2	6.0	8.4	5.9	8.9	5.8	9.4	5.8
	95	35.0	7.1	5.5	7.2	5.6	7.7	5.5	8.0	5.9	8.2	5.9	8.7	5.8	9.2	5.7
	100	37.5	7.0	5.4	7.1	5.5	7.6	5.5	7.8	5.8	8.1	5.8	8.6	5.7	9.1	5.6
	104	40.0	6.9	5.4	6.9	5.4	7.4	5.4	7.6	5.7	8.7	6.0	8.4	5.6	8.8	5.6
	110	43.0	6.7	5.3	6.7	5.3	7.2	5.3	7.4	5.7	7.6	5.6	8.1	5.6	8.6	5.5

kcal/h = kW x 860, Btu/h = kW x 3,412

CT

B2. Cooling capacity with PUHY-P300-400YHM /PUHY-EP300, 400Y(S)HM PURY-P300-400YHM /PURY-EP300, 400Y(S)HM

PEFY-P-VMA(L)-E

CA : Capacity(kW) SHC : Sensible Heat Capacity(kW)

Model size (Rated kW)	Outdoor air temp.		Indoor air temp.													
			71 ˚FDB / 59˚FWB		73˚FDB / 61˚FWB		77˚FDB / 64˚FWB		81˚FDB / 66˚FWB		82˚FDB / 68˚FWB		86˚FDB / 72˚FWB		90˚FDB / 75˚FWB	
			21.5˚CDB / 15˚CWB		23˚CDB / 16˚CWB		25˚CDB / 18˚CWB		27˚CDB / 19˚CWB		28˚CDB / 20˚CWB		30˚CDB / 22˚CWB		32˚CDB / 24˚CWB	
	˚FDB	˚CDB	CA	SHC	CA	SHC	CA	SHC	CA	SHC	CA	SHC	CA	SHC	CA	SHC
80 (9.0)	68	20.0	8.7	6.2	9.0	6.4	9.7	6.4	10.1	6.8	10.4	6.7	11.0	6.6	11.7	6.5
	73	22.5	8.7	6.2	9.0	6.4	9.6	6.3	9.9	6.7	10.2	6.7	10.8	6.6	11.5	6.5
	77	25.0	8.6	6.2	8.8	6.3	9.4	6.3	9.7	6.6	10.0	6.6	10.6	6.5	11.3	6.4
	82	27.5	8.4	6.1	8.6	6.2	9.2	6.2	9.5	6.5	9.8	6.5	10.4	6.4	11.0	6.3
	86	30.0	8.3	6.0	8.5	6.1	9.0	6.1	9.4	6.4	9.6	6.4	10.3	6.3	10.8	6.2
	91	32.5	8.1	5.9	8.3	6.1	8.9	6.0	9.2	6.4	9.5	6.3	10.0	6.2	10.6	6.1
	95	35.0	8.0	5.9	8.1	6.0	8.6	5.9	9.0	6.3	9.3	6.2	9.8	6.2	10.4	6.1
	100	37.5	7.9	5.8	8.0	5.9	8.5	5.8	8.8	6.2	9.1	6.2	9.6	6.1	10.2	6.0
	104	40.0	7.8	5.7	7.8	5.8	8.3	5.8	8.6	6.1	9.8	6.5	9.4	6.0	9.9	5.9
	110	43.0	7.6	5.6	7.6	5.7	8.1	5.7	8.4	6.0	8.6	6.0	9.1	5.9	9.7	5.8
100 (11.2)	68	20.0	10.9	8.5	11.3	8.8	12.1	8.8	12.5	9.4	12.9	9.3	13.7	9.2	14.6	9.1
	73	22.5	10.8	8.5	11.2	8.8	11.9	8.7	12.3	9.3	12.7	9.2	13.5	9.1	14.3	9.0
	77	25.0	10.7	8.4	11.0	8.7	11.7	8.6	12.1	9.2	12.5	9.1	13.2	9.0	14.0	8.9
	82	27.5	10.5	8.3	10.8	8.6	11.5	8.5	11.9	9.1	12.2	9.0	13.0	8.9	13.7	8.8
	86	30.0	10.3	8.2	10.5	8.5	11.3	8.4	11.6	9.0	12.0	8.9	12.8	8.8	13.4	8.7
	91	32.5	10.1	8.2	10.4	8.4	11.0	8.3	11.4	8.9	11.8	8.9	12.4	8.7	13.2	8.6
	95	35.0	10.0	8.1	10.1	8.3	10.8	8.2	11.2	8.8	11.5	8.8	12.2	8.6	12.9	8.5
	100	37.5	9.9	8.0	9.9	8.2	10.6	8.1	10.9	8.7	11.3	8.7	12.0	8.6	12.7	8.4
	104	40.0	9.7	8.0	9.7	8.1	10.4	8.0	10.7	8.6	12.2	9.0	11.7	8.5	12.4	8.3
	110	43.0	9.4	7.8	9.4	8.0	10.1	7.9	10.4	8.5	10.7	8.4	11.4	8.3	12.0	8.2
125 (14.0)	68	20.0	13.6	10.4	14.1	10.7	15.1	10.7	15.7	11.4	16.2	11.3	17.2	11.2	18.2	11.0
	73	22.5	13.5	10.3	14.0	10.7	14.9	10.6	15.4	11.3	15.9	11.2	16.8	11.1	17.9	10.9
	77	25.0	13.4	10.3	13.7	10.6	14.6	10.5	15.1	11.1	15.6	11.1	16.5	10.9	17.5	10.8
	82	27.5	13.1	10.1	13.4	10.4	14.4	10.4	14.8	11.0	15.3	11.0	16.2	10.8	17.2	10.6
	86	30.0	12.9	10.0	13.2	10.3	14.1	10.2	14.6	10.9	15.0	10.8	16.0	10.7	16.8	10.5
	91	32.5	12.7	9.9	13.0	10.2	13.8	10.1	14.3	10.8	14.7	10.7	15.5	10.6	16.5	10.4
	95	35.0	12.5	9.8	12.7	10.1	13.4	10.0	14.0	10.7	14.4	10.6	15.3	10.5	16.2	10.3
	100	37.5	12.3	9.8	12.4	9.9	13.2	9.9	13.7	10.5	14.1	10.5	15.0	10.4	15.8	10.2
	104	40.0	12.1	9.7	12.1	9.8	13.0	9.8	13.4	10.4	15.2	10.9	14.6	10.2	15.5	10.1
	110	43.0	11.8	9.5	11.8	9.7	12.6	9.6	13.0	10.3	13.4	10.2	14.2	10.1	15.1	9.9
140 (16.0)	68	20.0	15.5	11.7	16.1	12.1	17.3	12.1	17.9	12.9	18.5	12.8	19.6	12.6	20.8	12.4
	73	22.5	15.4	11.7	16.0	12.1	17.0	12.0	17.6	12.7	18.2	12.7	19.2	12.5	20.4	12.3
	77	25.0	15.3	11.6	15.7	11.9	16.7	11.8	17.3	12.6	17.8	12.5	18.9	12.3	20.0	12.2
	82	27.5	15.0	11.5	15.4	11.8	16.4	11.7	17.0	12.4	17.5	12.4	18.5	12.2	19.6	12.0
	86	30.0	14.7	11.3	15.0	11.6	16.1	11.6	16.6	12.3	17.1	12.2	18.2	12.1	19.2	11.9
	91	32.5	14.5	11.2	14.8	11.5	15.8	11.4	16.3	12.2	16.8	12.1	17.8	11.9	18.8	11.8
	95	35.0	14.2	11.1	14.5	11.4	15.4	11.2	16.0	12.0	16.5	12.0	17.4	11.8	18.5	11.6
	100	37.5	14.1	11.0	14.2	11.2	15.1	11.1	15.6	11.9	16.2	11.8	17.1	11.7	18.1	11.5
	104	40.0	13.8	10.9	13.8	11.1	14.8	11.0	15.3	11.7	17.4	12.3	16.7	11.5	17.7	11.3
	110	43.0	13.4	10.7	13.4	10.9	14.4	10.8	14.9	11.6	15.3	11.5	16.2	11.4	17.2	11.2

kcal/h = kW x 860, Btu/h = kW x 3,412

B3. Cooling capacity with PUHY-P450-650Y(S)HM/PUHY-EP450-650YSHM PURY-P450-650YSHM/PURY-EP450-600YSHM

PEFY-P-VMA(L)-E

CA : Capacity(kW) SHC : Sensible Heat Capacity(kW)

Model size (Rated kW)	Outdoor air temp.		Indoor air temp.													
			71 ˚FDB / 59˚FWB		73˚FDB / 61˚FWB		77˚FDB / 64˚FWB		81˚FDB / 66˚FWB		82˚FDB / 68˚FWB		86˚FDB / 72˚FWB		90˚FDB / 75˚FWB	
			21.5˚CDB / 15˚CWB		23˚CDB / 16˚CWB		25˚CDB / 18˚CWB		27˚CDB / 19˚CWB		28˚CDB / 20˚CWB		30˚CDB / 22˚CWB		32˚CDB / 24˚CWB	
	˚FDB	˚CDB	CA	SHC	CA	SHC	CA	SHC	CA	SHC	CA	SHC	CA	SHC	CA	SHC
20 (2.2)	68	20.0	2.1	1.9	2.1	1.9	2.3	1.9	2.4	2.0	2.5	2.0	2.6	2.0	2.8	2.0
	73	22.5	2.1	1.8	2.1	1.9	2.3	1.9	2.3	2.0	2.4	2.0	2.6	2.0	2.7	2.0
	77	25.0	2.0	1.8	2.1	1.9	2.2	1.9	2.3	2.0	2.4	2.0	2.6	2.0	2.7	2.0
	82	27.5	2.0	1.8	2.1	1.9	2.2	1.9	2.3	2.0	2.4	2.0	2.5	2.0	2.6	2.0
	86	30.0	2.0	1.8	2.0	1.9	2.2	1.9	2.3	2.0	2.4	2.0	2.5	2.0	2.7	2.0
	91	32.5	2.0	1.8	2.0	1.9	2.2	1.9	2.2	2.0	2.3	2.0	2.5	2.0	2.6	2.0
	95	35.0	2.0	1.8	2.0	1.9	2.1	1.8	2.2	2.0	2.3	2.0	2.5	2.0	2.6	2.0
	100	37.5	1.9	1.8	2.0	1.8	2.1	1.8	2.2	2.0	2.3	2.0	2.4	2.0	2.6	1.9
	104	40.0	1.9	1.8	1.9	1.8	2.1	1.8	2.1	2.0	2.2	2.0	2.4	2.0	2.6	1.9
	110	43.0	1.9	1.8	1.9	1.8	2.1	1.8	2.1	2.0	2.2	2.0	2.4	1.9	2.6	1.9
25 (2.8)	68	20.0	2.6	2.1	2.7	2.2	2.9	2.1	3.0	2.3	3.1	2.3	3.3	2.2	3.5	2.2
	73	22.5	2.6	2.1	2.7	2.1	2.9	2.1	3.0	2.3	3.1	2.3	3.3	2.2	3.5	2.2
	77	25.0	2.6	2.1	2.7	2.1	2.9	2.1	2.9	2.3	3.1	2.3	3.2	2.2	3.5	2.2
	82	27.5	2.6	2.1	2.6	2.1	2.8	2.1	2.9	2.2	3.0	2.2	3.2	2.2	3.4	2.2
	86	30.0	2.5	2.0	2.6	2.1	2.8	2.1	2.9	2.2	3.0	2.2	3.2	2.2	3.4	2.2
	91	32.5	2.5	2.0	2.6	2.1	2.7	2.1	2.8	2.2	3.0	2.2	3.2	2.2	3.4	2.2
	95	35.0	2.5	2.0	2.5	2.1	2.7	2.1	2.8	2.2	2.9	2.2	3.1	2.2	3.3	2.2
	100	37.5	2.5	2.0	2.5	2.1	2.7	2.0	2.8	2.2	2.9	2.2	3.1	2.2	3.3	2.1
	104	40.0	2.4	2.0	2.5	2.0	2.7	2.0	2.7	2.2	2.9	2.2	3.1	2.2	3.3	2.1
	110	43.0	2.4	2.0	2.5	2.0	2.6	2.0	2.7	2.2	2.8	2.2	3.0	2.1	3.2	2.1
32 (3.6)	68	20.0	3.4	2.5	3.5	2.6	3.7	2.6	3.9	2.7	4.0	2.7	4.2	2.7	4.5	2.7
	73	22.5	3.4	2.5	3.5	2.6	3.7	2.6	3.8	2.7	4.0	2.7	4.2	2.7	4.5	2.7
	77	25.0	3.3	2.5	3.4	2.6	3.7	2.6	3.8	2.7	3.9	2.7	4.2	2.7	4.4	2.6
	82	27.5	3.3	2.5	3.4	2.6	3.6	2.5	3.7	2.7	3.9	2.7	4.1	2.7	4.3	2.6
	86	30.0	3.3	2.5	3.3	2.5	3.6	2.5	3.7	2.7	3.9	2.7	4.1	2.7	4.4	2.6
	91	32.5	3.2	2.5	3.3	2.5	3.5	2.5	3.6	2.7	3.8	2.7	4.1	2.6	4.3	2.6
	95	35.0	3.2	2.4	3.3	2.5	3.5	2.5	3.6	2.6	3.7	2.6	4.0	2.6	4.3	2.6
	100	37.5	3.2	2.4	3.2	2.5	3.5	2.5	3.5	2.6	3.7	2.6	4.0	2.6	4.2	2.6
	104	40.0	3.1	2.4	3.2	2.5	3.4	2.5	3.5	2.6	3.7	2.6	4.0	2.6	4.2	2.6
	110	43.0	3.1	2.4	3.2	2.4	3.4	2.4	3.5	2.6	3.6	2.6	3.9	2.6	4.2	2.6
40 (4.5)	68	20.0	4.3	3.4	4.4	3.5	4.7	3.5	4.8	3.7	5.0	3.7	5.3	3.7	5.7	3.6
	73	22.5	4.2	3.4	4.3	3.5	4.6	3.5	4.8	3.7	5.0	3.7	5.3	3.7	5.6	3.6
	77	25.0	4.2	3.4	4.3	3.5	4.6	3.5	4.7	3.7	4.9	3.7	5.2	3.7	5.6	3.6
	82	27.5	4.1	3.4	4.2	3.5	4.5	3.4	4.7	3.7	4.9	3.7	5.2	3.6	5.4	3.6
	86	30.0	4.1	3.3	4.2	3.4	4.5	3.4	4.6	3.7	4.8	3.7	5.1	3.6	5.4	3.6
	91	32.5	4.1	3.3	4.1	3.4	4.4	3.4	4.5	3.6	4.8	3.6	5.1	3.6	5.4	3.6
	95	35.0	4.0	3.3	4.1	3.4	4.4	3.4	4.5	3.6	4.7	3.6	5.0	3.6	5.4	3.5
	100	37.5	4.0	3.3	4.0	3.4	4.3	3.4	4.4	3.6	4.7	3.6	5.0	3.6	5.3	3.5
	104	40.0	3.9	3.2	4.0	3.3	4.3	3.3	4.4	3.6	4.6	3.6	5.0	3.6	5.3	3.5
	110	43.0	3.9	3.2	3.9	3.3	4.2	3.3	4.3	3.5	4.5	3.6	4.9	3.5	5.2	3.5
50 (5.6)	68	20.0	5.3	4.2	5.5	4.3	5.8	4.3	6.0	4.6	6.2	4.6	6.6	4.5	7.1	4.5
	73	22.5	5.3	4.2	5.4	4.3	5.8	4.3	5.9	4.6	6.2	4.6	6.6	4.5	7.0	4.5
	77	25.0	5.2	4.2	5.3	4.3	5.7	4.3	5.9	4.5	6.1	4.5	6.5	4.5	6.9	4.4
	82	27.5	5.2	4.1	5.3	4.3	5.7	4.2	5.8	4.5	6.0	4.5	6.4	4.5	6.7	4.4
	86	30.0	5.1	4.1	5.2	4.2	5.6	4.2	5.8	4.5	6.0	4.5	6.4	4.4	6.8	4.4
	91	32.5	5.0	4.1	5.2	4.2	5.5	4.2	5.7	4.5	5.9	4.5	6.3	4.4	6.7	4.4
	95	35.0	5.0	4.1	5.1	4.2	5.5	4.2	5.6	4.4	5.8	4.4	6.3	4.4	6.7	4.3
	100	37.5	4.9	4.0	5.0	4.1	5.4	4.1	5.5	4.4	5.8	4.4	6.2	4.4	6.6	4.3
	104	40.0	4.8	4.0	5.0	4.1	5.3	4.1	5.4	4.4	5.7	4.4	6.2	4.4	6.6	4.3
	110	43.0	4.8	4.0	4.9	4.1	5.3	4.1	5.4	4.3	5.7	4.4	6.0	4.3	6.5	4.3
63 (7.1)	68	20.0	6.7	5.2	6.9	5.4	7.4	5.3	7.6	5.7	7.9	5.7	8.4	5.6	8.9	5.5
	73	22.5	6.7	5.2	6.9	5.3	7.3	5.3	7.5	5.6	7.8	5.6	8.3	5.6	8.8	5.5
	77	25.0	6.6	5.2	6.8	5.3	7.2	5.3	7.5	5.6	7.7	5.6	8.2	5.5	8.8	5.5
	82	27.5	6.5	5.1	6.7	5.3	7.2	5.2	7.4	5.6	7.7	5.6	8.2	5.5	8.5	5.4
	86	30.0	6.5	5.1	6.6	5.2	7.1	5.2	7.3	5.5	7.6	5.5	8.1	5.5	8.6	5.4
	91	32.5	6.4	5.1	6.5	5.2	7.0	5.2	7.2	5.5	7.5	5.5	8.0	5.5	8.5	5.4
	95	35.0	6.3	5.0	6.4	5.1	6.9	5.1	7.1	5.5	7.4	5.5	8.0	5.4	8.4	5.4
	100	37.5	6.2	5.0	6.4	5.1	6.8	5.1	7.0	5.4	7.3	5.4	7.8	5.4	8.4	5.3
	104	40.0	6.1	4.9	6.3	5.1	6.8	5.1	6.9	5.4	7.2	5.4	7.8	5.4	8.3	5.3
	110	43.0	6.1	4.9	6.2	5.0	6.7	5.0	6.8	5.3	7.2	5.4	7.7	5.3	8.2	5.3
71 (8.0)	68	20.0	7.6	5.7	7.8	5.8	8.3	5.8	8.6	6.1	8.9	6.1	9.4	6.1	10.1	6.0
	73	22.5	7.5	5.6	7.7	5.8	8.2	5.8	8.5	6.1	8.8	6.1	9.4	6.0	10.0	5.9
	77	25.0	7.4	5.6	7.6	5.8	8.2	5.7	8.4	6.1	8.7	6.1	9.3	6.0	9.9	5.9
	82	27.5	7.4	5.6	7.5	5.7	8.1	5.7	8.3	6.0	8.6	6.0	9.2	6.0	9.6	5.8
	86	30.0	7.3	5.5	7.4	5.7	8.0	5.7	8.2	6.0	8.6	6.0	9.1	5.9	9.7	5.8
	91	32.5	7.2	5.5	7.4	5.6	7.8	5.6	8.1	5.9	8.5	6.0	9.0	5.9	9.6	5.8
	95	35.0	7.1	5.5	7.2	5.6	7.8	5.6	8.0	5.9	8.3	5.9	9.0	5.9	9.5	5.8
	100	37.5	7.0	5.4	7.2	5.5	7.7	5.5	7.9	5.8	8.3	5.9	8.8	5.8	9.4	5.8
	104	40.0	6.9	5.4	7.1	5.5	7.6	5.5	7.8	5.8	8.2	5.8	8.8	5.8	9.4	5.7
	110	43.0	6.9	5.3	7.0	5.5	7.5	5.4	7.7	5.8	8.1	5.8	8.6	5.7	9.3	5.7

kcal/h = kW x 860, Btu/h = kW x 3,412

CT

B3. Cooling capacity with PUHY-P450-650Y(S)HM/PUHY-EP450-650YSHM PURY-P450-650YSHM/PURY-EP450-600YSHM

PEFY-P-VMA(L)-E

CA : Capacity(kW) SHC : Sensible Heat Capacity(kW)

Model size (Rated kW)	Outdoor air temp.		Indoor air temp.													
			71 ˚FDB / 59˚FWB		73˚FDB / 61˚FWB		77˚FDB / 64˚FWB		81˚FDB / 66˚FWB		82˚FDB / 68˚FWB		86˚FDB / 72˚FWB		90˚FDB / 75˚FWB	
			21.5˚CDB / 15˚CWB		23˚CDB / 16˚CWB		25˚CDB / 18˚CWB		27˚CDB / 19˚CWB		28˚CDB / 20˚CWB		30˚CDB / 22˚CWB		32˚CDB / 24˚CWB	
	˚FDB	˚CDB	CA	SHC	CA	SHC	CA	SHC	CA	SHC	CA	SHC	CA	SHC	CA	SHC
80 (9.0)	68	20.0	8.5	6.1	8.8	6.3	9.4	6.2	9.6	6.6	10.0	6.6	10.6	6.5	11.3	6.4
	73	22.5	8.5	6.1	8.7	6.2	9.3	6.2	9.5	6.5	9.9	6.5	10.6	6.5	11.2	6.4
	77	25.0	8.4	6.0	8.6	6.2	9.2	6.2	9.5	6.5	9.8	6.5	10.4	6.4	11.1	6.3
	82	27.5	8.3	6.0	8.5	6.1	9.1	6.1	9.4	6.4	9.7	6.4	10.4	6.4	10.8	6.2
	86	30.0	8.2	5.9	8.4	6.1	9.0	6.1	9.3	6.4	9.6	6.4	10.3	6.3	10.9	6.2
	91	32.5	8.1	5.9	8.3	6.0	8.8	6.0	9.1	6.3	9.5	6.4	10.2	6.3	10.8	6.2
	95	35.0	8.0	5.9	8.1	6.0	8.8	6.0	9.0	6.3	9.4	6.3	10.1	6.3	10.7	6.2
	100	37.5	7.9	5.8	8.1	5.9	8.6	5.9	8.9	6.2	9.3	6.3	9.9	6.2	10.6	6.1
	104	40.0	7.8	5.7	8.0	5.9	8.6	5.9	8.7	6.2	9.2	6.2	9.9	6.2	10.5	6.1
	110	43.0	7.7	5.7	7.9	5.8	8.5	5.8	8.6	6.1	9.1	6.2	9.7	6.1	10.4	6.1
100 (11.2)	68	20.0	10.6	8.4	10.9	8.7	11.6	8.6	12.0	9.1	12.5	9.1	13.2	9.0	14.1	8.9
	73	22.5	10.5	8.3	10.8	8.6	11.5	8.5	11.9	9.1	12.3	9.1	13.2	9.0	13.9	8.9
	77	25.0	10.4	8.3	10.7	8.5	11.4	8.5	11.8	9.0	12.2	9.0	13.0	8.9	13.8	8.8
	82	27.5	10.3	8.2	10.5	8.5	11.3	8.4	11.6	9.0	12.1	9.0	12.9	8.9	13.4	8.7
	86	30.0	10.2	8.2	10.4	8.4	11.2	8.4	11.5	9.0	12.0	8.9	12.8	8.8	13.6	8.7
	91	32.5	10.1	8.1	10.3	8.4	11.0	8.3	11.3	8.9	11.9	8.9	12.7	8.8	13.4	8.7
	95	35.0	10.0	8.1	10.1	8.3	10.9	8.3	11.2	8.8	11.6	8.8	12.5	8.8	13.3	8.6
	100	37.5	9.9	8.0	10.0	8.3	10.8	8.2	11.0	8.7	11.6	8.8	12.4	8.7	13.2	8.6
	104	40.0	9.7	8.0	9.9	8.2	10.7	8.2	10.9	8.7	11.4	8.7	12.3	8.7	13.1	8.6
	110	43.0	9.6	7.9	9.8	8.1	10.5	8.1	10.8	8.6	11.3	8.7	12.1	8.6	13.0	8.5
125 (14.0)	68	20.0	13.2	10.2	13.7	10.5	14.6	10.4	15.0	11.1	15.6	11.1	16.5	10.9	17.6	10.8
	73	22.5	13.2	10.2	13.5	10.5	14.4	10.4	14.8	11.0	15.4	11.0	16.5	10.9	17.4	10.7
	77	25.0	13.0	10.1	13.4	10.4	14.3	10.3	14.7	11.0	15.3	11.0	16.2	10.8	17.3	10.7
	82	27.5	12.9	10.0	13.2	10.3	14.1	10.3	14.6	10.9	15.1	10.9	16.1	10.8	16.8	10.5
	86	30.0	12.7	10.0	13.0	10.2	14.0	10.2	14.4	10.9	15.0	10.8	16.0	10.7	16.9	10.6
	91	32.5	12.6	9.9	12.9	10.2	13.7	10.1	14.1	10.7	14.8	10.8	15.8	10.7	16.8	10.5
	95	35.0	12.5	9.8	12.7	10.1	13.7	10.1	14.0	10.7	14.6	10.7	15.7	10.6	16.7	10.5
	100	37.5	12.3	9.8	12.6	10.0	13.4	10.0	13.8	10.6	14.5	10.6	15.5	10.5	16.5	10.4
	104	40.0	12.1	9.7	12.4	9.9	13.4	9.9	13.6	10.5	14.3	10.6	15.4	10.5	16.4	10.4
	110	43.0	12.0	9.6	12.3	9.9	13.2	9.8	13.4	10.4	14.1	10.5	15.1	10.4	16.2	10.3
140 (16.0)	68	20.0	15.1	11.5	15.6	11.9	16.6	11.8	17.1	12.5	17.8	12.5	18.9	12.3	20.2	12.2
	73	22.5	15.0	11.5	15.4	11.8	16.5	11.7	17.0	12.4	17.6	12.4	18.8	12.3	19.9	12.1
	77	25.0	14.9	11.4	15.3	11.7	16.3	11.7	16.8	12.4	17.4	12.4	18.6	12.2	19.8	12.1
	82	27.5	14.7	11.3	15.0	11.6	16.2	11.6	16.6	12.3	17.3	12.3	18.4	12.2	19.2	11.9
	86	30.0	14.6	11.3	14.9	11.6	16.0	11.5	16.5	12.2	17.1	12.2	18.2	12.1	19.4	11.9
	91	32.5	14.4	11.2	14.7	11.5	15.7	11.4	16.2	12.1	17.0	12.2	18.1	12.0	19.2	11.9
	95	35.0	14.2	11.1	14.5	11.4	15.6	11.4	16.0	12.0	16.6	12.0	17.9	12.0	19.0	11.8
	100	37.5	14.1	11.0	14.4	11.3	15.4	11.2	15.8	11.9	16.6	12.0	17.7	11.9	18.9	11.8
	104	40.0	13.8	10.9	14.2	11.2	15.3	11.2	15.5	11.8	16.3	11.9	17.6	11.9	18.7	11.7
	110	43.0	13.8	10.9	14.0	11.1	15.0	11.1	15.4	11.8	16.2	11.8	17.3	11.7	18.6	11.7

kcal/h = kW x 860, Btu/h = kW x 3,412

B4. Cooling capacity with PUHY-P700-800YSHM/PUHY-EP700-800YSHM PURY-P700-800YSHM

PEFY-P-VMA(L)-E

CA : Capacity(kW) SHC : Sensible Heat Capacity(kW)

Model size (Rated kW)	Outdoor air temp.		Indoor air temp.													
			71 ˚FDB / 59˚FWB		73˚FDB / 61˚FWB		77˚FDB / 64˚FWB		81˚FDB / 66˚FWB		82˚FDB / 68˚FWB		86˚FDB / 72˚FWB		90˚FDB / 75˚FWB	
			21.5˚CDB / 15˚CWB		23˚CDB / 16˚CWB		25˚CDB / 18˚CWB		27˚CDB / 19˚CWB		28˚CDB / 20˚CWB		30˚CDB / 22˚CWB		32˚CDB / 24˚CWB	
	˚FDB	˚CDB	CA	SHC	CA	SHC	CA	SHC	CA	SHC	CA	SHC	CA	SHC	CA	SHC
20 (2.2)	68	20.0	2.1	1.9	2.2	1.9	2.4	1.9	2.4	2.1	2.5	2.1	2.7	2.1	2.9	2.0
	73	22.5	2.1	1.9	2.2	1.9	2.3	1.9	2.4	2.1	2.5	2.1	2.7	2.0	2.8	2.0
	77	25.0	2.1	1.8	2.1	1.9	2.3	1.9	2.4	2.1	2.4	2.0	2.6	2.0	2.8	2.0
	82	27.5	2.0	1.8	2.1	1.9	2.2	1.9	2.3	2.0	2.4	2.0	2.6	2.0	2.7	2.0
	86	30.0	2.0	1.8	2.1	1.9	2.2	1.9	2.3	2.0	2.4	2.0	2.5	2.0	2.7	2.0
	91	32.5	1.9	1.8	2.0	1.9	2.2	1.9	2.2	2.0	2.3	2.0	2.5	2.0	2.6	2.0
	95	35.0	1.9	1.8	2.0	1.8	2.1	1.8	2.2	2.0	2.3	2.0	2.4	2.0	2.6	1.9
	100	37.5	1.9	1.8	2.0	1.8	2.1	1.8	2.2	2.0	2.2	2.0	2.4	1.9	2.5	1.9
	104	40.0	1.8	1.7	1.9	1.8	2.0	1.8	2.1	2.0	2.2	1.9	2.3	1.9	2.5	1.9
	110	43.0	1.8	1.7	1.8	1.8	2.0	1.8	2.1	1.9	2.1	1.9	2.3	1.9	2.4	1.9
25 (2.8)	68	20.0	2.7	2.1	2.8	2.2	3.0	2.2	3.1	2.3	3.2	2.3	3.4	2.3	3.7	2.3
	73	22.5	2.7	2.1	2.8	2.2	3.0	2.2	3.1	2.3	3.2	2.3	3.4	2.3	3.6	2.2
	77	25.0	2.6	2.1	2.7	2.2	2.9	2.1	3.0	2.3	3.1	2.3	3.3	2.2	3.5	2.2
	82	27.5	2.6	2.1	2.7	2.1	2.9	2.1	3.0	2.3	3.1	2.3	3.3	2.2	3.5	2.2
	86	30.0	2.5	2.0	2.6	2.1	2.8	2.1	2.9	2.2	3.0	2.2	3.2	2.2	3.4	2.2
	91	32.5	2.5	2.0	2.6	2.1	2.7	2.1	2.8	2.2	2.9	2.2	3.1	2.2	3.3	2.2
	95	35.0	2.4	2.0	2.5	2.1	2.7	2.0	2.8	2.2	2.9	2.2	3.1	2.2	3.3	2.1
	100	37.5	2.4	2.0	2.5	2.0	2.6	2.0	2.7	2.2	2.8	2.2	3.0	2.1	3.2	2.1
	104	40.0	2.4	2.0	2.4	2.0	2.6	2.0	2.7	2.2	2.8	2.1	3.0	2.1	3.2	2.1
	110	43.0	2.3	1.9	2.4	2.0	2.5	2.0	2.6	2.1	2.7	2.1	2.9	2.1	3.1	2.1
32 (3.6)	68	20.0	3.5	2.6	3.6	2.7	3.9	2.7	4.0	2.8	4.1	2.8	4.4	2.8	4.7	2.7
	73	22.5	3.4	2.5	3.5	2.6	3.8	2.6	3.9	2.8	4.1	2.8	4.4	2.8	4.6	2.7
	77	25.0	3.4	2.5	3.5	2.6	3.7	2.6	3.9	2.8	4.0	2.7	4.2	2.7	4.5	2.7
	82	27.5	3.3	2.5	3.4	2.6	3.7	2.6	3.8	2.7	3.9	2.7	4.2	2.7	4.5	2.7
	86	30.0	3.2	2.5	3.4	2.5	3.6	2.5	3.7	2.7	3.9	2.7	4.1	2.7	4.4	2.6
	91	32.5	3.2	2.4	3.3	2.5	3.5	2.5	3.7	2.7	3.8	2.7	4.0	2.6	4.3	2.6
	95	35.0	3.1	2.4	3.2	2.5	3.5	2.5	3.6	2.6	3.7	2.6	4.0	2.6	4.2	2.6
	100	37.5	3.1	2.4	3.2	2.5	3.4	2.4	3.5	2.6	3.7	2.6	3.9	2.6	4.1	2.5
	104	40.0	3.0	2.4	3.1	2.4	3.3	2.4	3.5	2.6	3.6	2.6	3.8	2.5	4.1	2.5
	110	43.0	3.0	2.3	3.0	2.4	3.2	2.4	3.4	2.5	3.5	2.5	3.7	2.5	4.0	2.5
40 (4.5)	68	20.0	4.3	3.5	4.5	3.6	4.8	3.6	5.0	3.8	5.2	3.8	5.5	3.8	5.9	3.7
	73	22.5	4.3	3.4	4.4	3.6	4.7	3.5	4.9	3.8	5.1	3.8	5.4	3.7	5.8	3.7
	77	25.0	4.2	3.4	4.4	3.5	4.7	3.5	4.8	3.7	5.0	3.7	5.3	3.7	5.7	3.6
	82	27.5	4.1	3.4	4.3	3.5	4.6	3.5	4.7	3.7	4.9	3.7	5.2	3.7	5.6	3.6
	86	30.0	4.1	3.3	4.2	3.5	4.5	3.4	4.7	3.7	4.8	3.7	5.1	3.6	5.5	3.6
	91	32.5	4.0	3.3	4.1	3.4	4.4	3.4	4.6	3.6	4.7	3.6	5.0	3.6	5.4	3.5
	95	35.0	3.9	3.3	4.1	3.4	4.3	3.4	4.5	3.6	4.6	3.6	5.0	3.6	5.3	3.5
	100	37.5	3.8	3.2	4.0	3.4	4.3	3.3	4.4	3.6	4.6	3.6	4.9	3.5	5.2	3.5
	104	40.0	3.8	3.2	3.9	3.3	4.2	3.3	4.3	3.5	4.5	3.5	4.8	3.5	5.1	3.4
	110	43.0	3.7	3.2	3.8	3.3	4.1	3.2	4.2	3.5	4.4	3.5	4.7	3.4	5.0	3.4
50 (5.6)	68	20.0	5.4	4.3	5.6	4.4	6.0	4.4	6.2	4.7	6.4	4.7	6.9	4.6	7.3	4.6
	73	22.5	5.3	4.2	5.5	4.4	5.9	4.4	6.1	4.6	6.3	4.6	6.8	4.6	7.2	4.5
	77	25.0	5.3	4.2	5.4	4.3	5.8	4.3	6.0	4.6	6.2	4.6	6.6	4.5	7.1	4.5
	82	27.5	5.2	4.1	5.3	4.3	5.7	4.3	5.9	4.6	6.1	4.5	6.5	4.5	6.9	4.4
	86	30.0	5.0	4.1	5.2	4.2	5.6	4.2	5.8	4.5	6.0	4.5	6.4	4.4	6.8	4.4
	91	32.5	5.0	4.1	5.1	4.2	5.5	4.2	5.7	4.5	5.9	4.5	6.3	4.4	6.7	4.4
	95	35.0	4.9	4.0	5.0	4.2	5.4	4.1	5.6	4.4	5.8	4.4	6.2	4.4	6.6	4.3
	100	37.5	4.8	4.0	5.0	4.1	5.3	4.1	5.5	4.4	5.7	4.4	6.0	4.3	6.4	4.3
	104	40.0	4.7	3.9	4.8	4.1	5.2	4.0	5.4	4.3	5.6	4.3	5.9	4.3	6.3	4.2
	110	43.0	4.6	3.9	4.7	4.0	5.0	4.0	5.2	4.3	5.4	4.3	5.8	4.2	6.2	4.2
63 (7.1)	68	20.0	6.9	5.3	7.1	5.5	7.6	5.4	7.9	5.8	8.2	5.8	8.7	5.7	9.3	5.6
	73	22.5	6.7	5.2	7.0	5.4	7.5	5.4	7.8	5.7	8.0	5.7	8.6	5.7	9.1	5.6
	77	25.0	6.7	5.2	6.9	5.4	7.4	5.3	7.6	5.7	7.9	5.7	8.4	5.6	8.9	5.5
	82	27.5	6.5	5.1	6.7	5.3	7.2	5.3	7.5	5.6	7.7	5.6	8.3	5.5	8.8	5.5
	86	30.0	6.4	5.1	6.6	5.2	7.1	5.2	7.3	5.6	7.6	5.5	8.1	5.5	8.7	5.4
	91	32.5	6.3	5.0	6.5	5.2	7.0	5.2	7.2	5.5	7.5	5.5	8.0	5.4	8.5	5.4
	95	35.0	6.2	5.0	6.4	5.1	6.8	5.1	7.1	5.5	7.3	5.4	7.8	5.4	8.3	5.3
	100	37.5	6.1	4.9	6.3	5.1	6.7	5.0	7.0	5.4	7.2	5.4	7.7	5.3	8.2	5.3
	104	40.0	6.0	4.9	6.1	5.0	6.6	5.0	6.8	5.3	7.1	5.3	7.5	5.3	8.0	5.2
	110	43.0	5.8	4.8	6.0	4.9	6.4	4.9	6.6	5.3	6.9	5.3	7.3	5.2	7.8	5.1
71 (8.0)	68	20.0	7.7	5.7	8.0	5.9	8.6	5.9	8.9	6.3	9.2	6.3	9.8	6.2	10.4	6.1
	73	22.5	7.6	5.7	7.9	5.9	8.4	5.9	8.7	6.2	9.0	6.2	9.7	6.1	10.2	6.0
	77	25.0	7.5	5.6	7.8	5.8	8.3	5.8	8.6	6.2	8.9	6.1	9.4	6.1	10.1	6.0
	82	27.5	7.4	5.6	7.6	5.7	8.2	5.7	8.4	6.1	8.7	6.1	9.3	6.0	9.9	5.9
	86	30.0	7.2	5.5	7.5	5.7	8.0	5.7	8.3	6.0	8.6	6.0	9.1	5.9	9.8	5.9
	91	32.5	7.1	5.4	7.3	5.6	7.8	5.6	8.1	5.9	8.4	5.9	9.0	5.9	9.6	5.8
	95	35.0	7.0	5.4	7.2	5.6	7.7	5.5	8.0	5.9	8.2	5.9	8.8	5.8	9.4	5.7
	100	37.5	6.8	5.3	7.1	5.5	7.6	5.5	7.8	5.8	8.1	5.8	8.6	5.7	9.2	5.7
	104	40.0	6.7	5.3	6.9	5.4	7.4	5.4	7.7	5.8	8.0	5.7	8.5	5.7	9.0	5.6
	110	43.0	6.6	5.2	6.7	5.3	7.2	5.3	7.5	5.7	7.8	5.7	8.3	5.6	8.8	5.5

kcal/h = kW x 860, Btu/h = kW x 3,412

CT

B4. Cooling capacity with PUHY-P700-800YSHM/PUHY-EP700-800YSHM PURY-P700-800YSHM

PEFY-P-VMA(L)-E

CA : Capacity(kW) SHC : Sensible Heat Capacity(kW)

Model size (Rated kW)	Outdoor air temp.		Indoor air temp.													
			71 ˚FDB / 59˚FWB		73˚FDB / 61˚FWB		77˚FDB / 64˚FWB		81˚FDB / 66˚FWB		82˚FDB / 68˚FWB		86˚FDB / 72˚FWB		90˚FDB / 75˚FWB	
			21.5˚CDB / 15˚CWB		23˚CDB / 16˚CWB		25˚CDB / 18˚CWB		27˚CDB / 19˚CWB		28˚CDB / 20˚CWB		30˚CDB / 22˚CWB		32˚CDB / 24˚CWB	
	˚FDB	˚CDB	CA	SHC	CA	SHC	CA	SHC	CA	SHC	CA	SHC	CA	SHC	CA	SHC
80 (9.0)	68	20.0	8.7	6.2	9.0	6.4	9.7	6.4	10.0	6.7	10.4	6.7	11.1	6.7	11.7	6.6
	73	22.5	8.6	6.1	8.9	6.3	9.5	6.3	9.8	6.7	10.2	6.6	10.9	6.6	11.5	6.5
	77	25.0	8.5	6.1	8.7	6.3	9.4	6.2	9.7	6.6	10.0	6.6	10.6	6.5	11.3	6.4
	82	27.5	8.3	6.0	8.6	6.2	9.2	6.2	9.5	6.5	9.8	6.5	10.5	6.4	11.2	6.3
	86	30.0	8.1	5.9	8.4	6.1	9.0	6.1	9.3	6.4	9.6	6.4	10.3	6.3	11.0	6.3
	91	32.5	8.0	5.8	8.2	6.0	8.8	6.0	9.1	6.3	9.5	6.3	10.1	6.3	10.8	6.2
	95	35.0	7.8	5.8	8.1	5.9	8.6	5.9	9.0	6.3	9.3	6.2	9.9	6.2	10.5	6.1
	100	37.5	7.7	5.7	8.0	5.9	8.5	5.8	8.8	6.2	9.1	6.2	9.7	6.1	10.4	6.0
	104	40.0	7.6	5.6	7.7	5.8	8.3	5.8	8.6	6.1	9.0	6.1	9.5	6.0	10.1	6.0
	110	43.0	7.4	5.5	7.6	5.7	8.1	5.7	8.4	6.0	8.7	6.0	9.3	6.0	9.9	5.9
100 (11.2)	68	20.0	10.8	8.5	11.2	8.8	12.0	8.8	12.5	9.3	12.9	9.3	13.8	9.2	14.6	9.1
	73	22.5	10.6	8.4	11.0	8.7	11.8	8.7	12.2	9.2	12.7	9.2	13.6	9.1	14.3	9.0
	77	25.0	10.5	8.3	10.9	8.6	11.6	8.6	12.0	9.2	12.4	9.1	13.2	9.0	14.1	8.9
	82	27.5	10.3	8.2	10.6	8.5	11.4	8.5	11.8	9.1	12.2	9.0	13.0	9.0	13.9	8.8
	86	30.0	10.1	8.1	10.5	8.4	11.2	8.4	11.6	9.0	12.0	8.9	12.8	8.8	13.7	8.8
	91	32.5	9.9	8.1	10.2	8.3	11.0	8.3	11.4	8.9	11.8	8.9	12.5	8.8	13.4	8.7
	95	35.0	9.7	8.0	10.1	8.3	10.8	8.2	11.2	8.8	11.5	8.8	12.3	8.7	13.1	8.6
	100	37.5	9.6	7.9	10.0	8.2	10.6	8.1	11.0	8.7	11.4	8.7	12.1	8.6	12.9	8.5
	104	40.0	9.4	7.8	9.6	8.1	10.4	8.0	10.8	8.6	11.1	8.6	11.9	8.5	12.6	8.4
	110	43.0	9.2	7.7	9.4	8.0	10.1	7.9	10.5	8.5	10.9	8.5	11.6	8.4	12.3	8.3
125 (14.0)	68	20.0	13.5	10.3	14.0	10.7	15.1	10.7	15.6	11.3	16.1	11.3	17.2	11.2	18.3	11.0
	73	22.5	13.3	10.2	13.8	10.6	14.8	10.5	15.3	11.2	15.8	11.2	16.9	11.1	17.9	10.9
	77	25.0	13.2	10.2	13.6	10.5	14.6	10.4	15.1	11.1	15.5	11.1	16.5	10.9	17.6	10.8
	82	27.5	12.9	10.0	13.3	10.4	14.3	10.3	14.8	11.0	15.3	11.0	16.3	10.9	17.4	10.7
	86	30.0	12.6	9.9	13.1	10.3	14.0	10.2	14.5	10.9	15.0	10.8	16.0	10.7	17.1	10.6
	91	32.5	12.4	9.8	12.8	10.1	13.7	10.1	14.2	10.8	14.7	10.7	15.7	10.6	16.7	10.5
	95	35.0	12.2	9.7	12.6	10.0	13.4	10.0	14.0	10.7	14.4	10.6	15.4	10.5	16.4	10.4
	100	37.5	12.0	9.6	12.5	10.0	13.2	9.9	13.7	10.6	14.2	10.5	15.1	10.4	16.1	10.3
	104	40.0	11.8	9.5	12.0	9.8	13.0	9.8	13.4	10.4	13.9	10.4	14.8	10.3	15.8	10.2
	110	43.0	11.5	9.4	11.8	9.7	12.6	9.6	13.1	10.3	13.6	10.3	14.5	10.2	15.4	10.0
140 (16.0)	68	20.0	15.4	11.7	16.0	12.1	17.2	12.1	17.8	12.8	18.4	12.8	19.7	12.7	20.9	12.5
	73	22.5	15.2	11.6	15.8	12.0	16.9	11.9	17.5	12.7	18.1	12.6	19.4	12.5	20.5	12.3
	77	25.0	15.0	11.5	15.5	11.9	16.6	11.8	17.2	12.6	17.8	12.5	18.9	12.3	20.2	12.2
	82	27.5	14.7	11.3	15.2	11.7	16.3	11.7	16.9	12.4	17.4	12.4	18.6	12.3	19.8	12.1
	86	30.0	14.4	11.2	15.0	11.6	16.0	11.5	16.6	12.3	17.1	12.2	18.2	12.1	19.5	12.0
	91	32.5	14.2	11.1	14.6	11.4	15.7	11.4	16.2	12.1	16.8	12.1	17.9	12.0	19.1	11.8
	95	35.0	13.9	11.0	14.4	11.3	15.4	11.2	16.0	12.0	16.5	12.0	17.6	11.9	18.7	11.7
	100	37.5	13.7	10.8	14.2	11.3	15.1	11.1	15.7	11.9	16.2	11.9	17.3	11.7	18.4	11.6
	104	40.0	13.4	10.7	13.8	11.0	14.8	11.0	15.4	11.8	15.9	11.7	17.0	11.6	18.0	11.5
	110	43.0	13.1	10.6	13.4	10.9	14.4	10.8	15.0	11.6	15.5	11.6	16.6	11.5	17.6	11.3

kcal/h = kW x 860, Btu/h = kW x 3,412

B5. Cooling capacity with PUHY-P850-1250YSHM/PUHY-EP850-900YSHM

PEFY-P-VMA(L)-E

CA : Capacity(kW) SHC : Sensible Heat Capacity(kW)

Model size (Rated kW)	Outdoor air temp.		Indoor air temp.													
			71 ˚FDB / 59˚FWB		73˚FDB / 61˚FWB		77˚FDB / 64˚FWB		81˚FDB / 66˚FWB		82˚FDB / 68˚FWB		86˚FDB / 72˚FWB		90˚FDB / 75˚FWB	
			21.5˚CDB / 15˚CWB		23˚CDB / 16˚CWB		25˚CDB / 18˚CWB		27˚CDB / 19˚CWB		28˚CDB / 20˚CWB		30˚CDB / 22˚CWB		32˚CDB / 24˚CWB	
	˚FDB	˚CDB	CA	SHC	CA	SHC	CA	SHC	CA	SHC	CA	SHC	CA	SHC	CA	SHC
20 (2.2)	68	20.0	2.1	1.9	2.1	1.9	2.3	1.9	2.4	2.1	2.4	2.0	2.6	2.0	2.8	2.0
	73	22.5	2.1	1.8	2.1	1.9	2.3	1.9	2.3	2.0	2.4	2.0	2.6	2.0	2.7	2.0
	77	25.0	2.0	1.8	2.1	1.9	2.2	1.9	2.3	2.0	2.4	2.0	2.6	2.0	2.7	2.0
	82	27.5	2.0	1.8	2.1	1.9	2.2	1.9	2.3	2.0	2.4	2.0	2.5	2.0	2.7	2.0
	86	30.0	2.0	1.8	2.0	1.9	2.2	1.9	2.3	2.0	2.3	2.0	2.5	2.0	2.7	2.0
	91	32.5	2.0	1.8	2.0	1.9	2.2	1.9	2.2	2.0	2.3	2.0	2.5	2.0	2.6	2.0
	95	35.0	1.9	1.8	2.0	1.9	2.1	1.8	2.2	2.0	2.3	2.0	2.5	2.0	2.6	1.9
	100	37.5	1.9	1.8	2.0	1.8	2.1	1.8	2.2	2.0	2.3	2.0	2.4	2.0	2.6	1.9
	104	40.0	1.9	1.8	1.9	1.8	2.1	1.8	2.2	2.0	2.2	2.0	2.4	2.0	2.6	1.9
	110	43.0	1.9	1.8	1.9	1.8	2.1	1.8	2.1	2.0	2.2	2.0	2.4	1.9	2.5	1.9
25 (2.8)	68	20.0	2.6	2.1	2.7	2.2	2.9	2.1	3.0	2.3	3.1	2.3	3.3	2.2	3.5	2.2
	73	22.5	2.6	2.1	2.7	2.1	2.9	2.1	3.0	2.3	3.1	2.3	3.3	2.2	3.5	2.2
	77	25.0	2.6	2.1	2.7	2.1	2.9	2.1	2.9	2.3	3.0	2.3	3.2	2.2	3.4	2.2
	82	27.5	2.6	2.1	2.6	2.1	2.8	2.1	2.9	2.2	3.0	2.2	3.2	2.2	3.4	2.2
	86	30.0	2.5	2.0	2.6	2.1	2.8	2.1	2.9	2.2	3.0	2.2	3.2	2.2	3.4	2.2
	91	32.5	2.5	2.0	2.6	2.1	2.7	2.1	2.8	2.2	2.9	2.2	3.2	2.2	3.4	2.2
	95	35.0	2.5	2.0	2.5	2.1	2.7	2.1	2.8	2.2	2.9	2.2	3.1	2.2	3.3	2.2
	100	37.5	2.5	2.0	2.5	2.1	2.7	2.0	2.8	2.2	2.9	2.2	3.1	2.2	3.3	2.1
	104	40.0	2.4	2.0	2.5	2.0	2.6	2.0	2.7	2.2	2.9	2.2	3.1	2.2	3.3	2.1
	110	43.0	2.4	2.0	2.4	2.0	2.6	2.0	2.7	2.2	2.8	2.2	3.0	2.1	3.2	2.1
32 (3.6)	68	20.0	3.4	2.5	3.5	2.6	3.7	2.6	3.9	2.7	4.0	2.7	4.2	2.7	4.5	2.7
	73	22.5	3.4	2.5	3.5	2.6	3.7	2.6	3.8	2.7	4.0	2.7	4.2	2.7	4.5	2.7
	77	25.0	3.3	2.5	3.4	2.6	3.7	2.6	3.8	2.7	3.9	2.7	4.2	2.7	4.4	2.6
	82	27.5	3.3	2.5	3.4	2.6	3.6	2.5	3.7	2.7	3.9	2.7	4.1	2.7	4.4	2.6
	86	30.0	3.3	2.5	3.3	2.5	3.6	2.5	3.7	2.7	3.8	2.7	4.1	2.7	4.3	2.6
	91	32.5	3.2	2.5	3.3	2.5	3.5	2.5	3.7	2.7	3.8	2.7	4.1	2.6	4.3	2.6
	95	35.0	3.2	2.4	3.3	2.5	3.5	2.5	3.6	2.6	3.8	2.6	4.0	2.6	4.3	2.6
	100	37.5	3.2	2.4	3.2	2.5	3.4	2.5	3.6	2.6	3.7	2.6	4.0	2.6	4.2	2.6
	104	40.0	3.1	2.4	3.2	2.5	3.4	2.4	3.5	2.6	3.7	2.6	3.9	2.6	4.2	2.6
	110	43.0	3.1	2.4	3.1	2.4	3.4	2.4	3.5	2.6	3.6	2.6	3.9	2.6	4.2	2.5
40 (4.5)	68	20.0	4.3	3.4	4.4	3.5	4.7	3.5	4.8	3.7	5.0	3.7	5.3	3.7	5.6	3.6
	73	22.5	4.2	3.4	4.3	3.5	4.6	3.5	4.8	3.7	4.9	3.7	5.3	3.7	5.6	3.6
	77	25.0	4.2	3.4	4.3	3.5	4.6	3.5	4.7	3.7	4.9	3.7	5.2	3.7	5.5	3.6
	82	27.5	4.1	3.4	4.2	3.5	4.5	3.4	4.7	3.7	4.8	3.7	5.2	3.6	5.5	3.6
	86	30.0	4.1	3.3	4.2	3.4	4.5	3.4	4.6	3.7	4.8	3.6	5.1	3.6	5.4	3.6
	91	32.5	4.0	3.3	4.1	3.4	4.4	3.4	4.6	3.6	4.7	3.6	5.1	3.6	5.4	3.6
	95	35.0	4.0	3.3	4.1	3.4	4.4	3.4	4.5	3.6	4.7	3.6	5.0	3.6	5.3	3.5
	100	37.5	3.9	3.3	4.0	3.4	4.3	3.4	4.5	3.6	4.6	3.6	5.0	3.6	5.3	3.5
	104	40.0	3.9	3.2	4.0	3.3	4.3	3.3	4.4	3.6	4.6	3.6	4.9	3.5	5.2	3.5
	110	43.0	3.8	3.2	3.9	3.3	4.2	3.3	4.4	3.5	4.5	3.5	4.9	3.5	5.2	3.5
50 (5.6)	68	20.0	5.3	4.2	5.4	4.3	5.8	4.3	6.0	4.6	6.2	4.6	6.6	4.5	7.0	4.5
	73	22.5	5.2	4.2	5.4	4.3	5.8	4.3	5.9	4.6	6.1	4.6	6.6	4.5	7.0	4.4
	77	25.0	5.2	4.2	5.3	4.3	5.7	4.3	5.9	4.5	6.1	4.5	6.5	4.5	6.9	4.4
	82	27.5	5.1	4.1	5.3	4.3	5.6	4.2	5.8	4.5	6.0	4.5	6.4	4.5	6.8	4.4
	86	30.0	5.1	4.1	5.2	4.2	5.6	4.2	5.8	4.5	5.9	4.5	6.4	4.4	6.7	4.4
	91	32.5	5.0	4.1	5.1	4.2	5.5	4.2	5.7	4.5	5.9	4.5	6.3	4.4	6.7	4.4
	95	35.0	5.0	4.1	5.1	4.2	5.4	4.2	5.6	4.4	5.8	4.4	6.3	4.4	6.7	4.3
	100	37.5	4.9	4.0	5.0	4.1	5.4	4.1	5.6	4.4	5.8	4.4	6.2	4.4	6.6	4.3
	104	40.0	4.8	4.0	4.9	4.1	5.3	4.1	5.5	4.4	5.7	4.4	6.1	4.4	6.5	4.3
	110	43.0	4.8	4.0	4.9	4.1	5.2	4.1	5.4	4.4	5.6	4.4	6.0	4.3	6.5	4.3
63 (7.1)	68	20.0	6.7	5.2	6.9	5.4	7.4	5.3	7.6	5.7	7.9	5.7	8.4	5.6	8.9	5.5
	73	22.5	6.6	5.2	6.8	5.3	7.3	5.3	7.5	5.6	7.8	5.6	8.3	5.6	8.8	5.5
	77	25.0	6.6	5.1	6.7	5.3	7.2	5.3	7.5	5.6	7.7	5.6	8.2	5.5	8.7	5.5
	82	27.5	6.5	5.1	6.7	5.3	7.1	5.2	7.4	5.6	7.6	5.6	8.2	5.5	8.7	5.4
	86	30.0	6.4	5.1	6.6	5.2	7.1	5.2	7.3	5.5	7.5	5.5	8.1	5.5	8.6	5.4
	91	32.5	6.4	5.0	6.5	5.2	7.0	5.2	7.2	5.5	7.5	5.5	8.0	5.4	8.5	5.4
	95	35.0	6.3	5.0	6.4	5.1	6.9	5.1	7.1	5.5	7.4	5.5	7.9	5.4	8.4	5.3
	100	37.5	6.2	5.0	6.3	5.1	6.8	5.1	7.0	5.4	7.3	5.4	7.8	5.4	8.4	5.3
	104	40.0	6.1	4.9	6.2	5.1	6.7	5.0	7.0	5.4	7.2	5.4	7.8	5.4	8.3	5.3
	110	43.0	6.1	4.9	6.2	5.0	6.6	5.0	6.9	5.4	7.2	5.4	7.7	5.3	8.2	5.3
71 (8.0)	68	20.0	7.6	5.7	7.8	5.8	8.3	5.8	8.6	6.1	8.9	6.1	9.4	6.1	10.0	6.0
	73	22.5	7.5	5.6	7.7	5.8	8.2	5.8	8.5	6.1	8.8	6.1	9.4	6.0	9.9	5.9
	77	25.0	7.4	5.6	7.6	5.7	8.1	5.7	8.4	6.1	8.7	6.1	9.3	6.0	9.9	5.9
	82	27.5	7.3	5.6	7.5	5.7	8.0	5.7	8.3	6.0	8.6	6.0	9.2	6.0	9.8	5.9
	86	30.0	7.2	5.5	7.4	5.6	7.9	5.6	8.2	6.0	8.5	6.0	9.1	5.9	9.6	5.8
	91	32.5	7.2	5.5	7.3	5.6	7.8	5.6	8.1	6.0	8.4	5.9	9.0	5.9	9.6	5.8
	95	35.0	7.1	5.4	7.2	5.6	7.8	5.6	8.0	5.9	8.3	5.9	8.9	5.9	9.5	5.8
	100	37.5	7.0	5.4	7.1	5.5	7.7	5.5	7.9	5.9	8.3	5.9	8.8	5.8	9.4	5.8
	104	40.0	6.9	5.4	7.0	5.5	7.6	5.5	7.8	5.8	8.2	5.8	8.7	5.8	9.3	5.7
	110	43.0	6.8	5.3	6.9	5.4	7.5	5.4	7.7	5.8	8.1	5.8	8.6	5.7	9.2	5.7

kcal/h = kW x 860, Btu/h = kW x 3,412

CT

B5. Cooling capacity with PUHY-P850-1250YSHM/PUHY-EP850-900YSHM

PEFY-P-VMA(L)-E

CA : Capacity(kW) SHC : Sensible Heat Capacity(kW)

Model size (Rated kW)	Outdoor air temp.		Indoor air temp.													
			71 ˚FDB / 59˚FWB		73˚FDB / 61˚FWB		77˚FDB / 64˚FWB		81˚FDB / 66˚FWB		82˚FDB / 68˚FWB		86˚FDB / 72˚FWB		90˚FDB / 75˚FWB	
			21.5˚CDB / 15˚CWB		23˚CDB / 16˚CWB		25˚CDB / 18˚CWB		27˚CDB / 19˚CWB		28˚CDB / 20˚CWB		30˚CDB / 22˚CWB		32˚CDB / 24˚CWB	
	˚FDB	˚CDB	CA	SHC	CA	SHC	CA	SHC	CA	SHC	CA	SHC	CA	SHC	CA	SHC
80 (9.0)	68	20.0	8.5	6.1	8.7	6.3	9.4	6.2	9.6	6.6	10.0	6.6	10.6	6.5	11.3	6.4
	73	22.5	8.4	6.1	8.6	6.2	9.3	6.2	9.6	6.5	9.9	6.5	10.5	6.4	11.2	6.3
	77	25.0	8.3	6.0	8.5	6.2	9.2	6.1	9.5	6.5	9.8	6.5	10.4	6.4	11.1	6.3
	82	27.5	8.2	6.0	8.4	6.1	9.0	6.1	9.4	6.4	9.7	6.4	10.4	6.4	11.0	6.3
	86	30.0	8.1	5.9	8.3	6.1	8.9	6.0	9.3	6.4	9.6	6.4	10.2	6.3	10.8	6.2
	91	32.5	8.1	5.9	8.2	6.0	8.8	6.0	9.2	6.3	9.5	6.3	10.1	6.3	10.8	6.2
	95	35.0	8.0	5.8	8.1	6.0	8.7	5.9	9.0	6.3	9.4	6.3	10.1	6.3	10.7	6.2
	100	37.5	7.9	5.8	8.0	5.9	8.6	5.9	8.9	6.2	9.3	6.3	9.9	6.2	10.6	6.1
	104	40.0	7.8	5.7	7.9	5.9	8.5	5.8	8.8	6.2	9.2	6.2	9.8	6.2	10.5	6.1
	110	43.0	7.7	5.7	7.8	5.8	8.4	5.8	8.7	6.2	9.1	6.2	9.7	6.1	10.4	6.0
100 (11.2)	68	20.0	10.6	8.4	10.9	8.6	11.6	8.6	12.0	9.1	12.4	9.1	13.2	9.0	14.0	8.9
	73	22.5	10.5	8.3	10.8	8.6	11.5	8.5	11.9	9.1	12.3	9.1	13.1	9.0	13.9	8.8
	77	25.0	10.4	8.3	10.6	8.5	11.4	8.5	11.8	9.0	12.2	9.0	13.0	8.9	13.8	8.8
	82	27.5	10.2	8.2	10.5	8.5	11.2	8.4	11.6	9.0	12.0	9.0	12.9	8.9	13.7	8.8
	86	30.0	10.1	8.2	10.4	8.4	11.1	8.4	11.5	8.9	11.9	8.9	12.7	8.8	13.5	8.7
	91	32.5	10.0	8.1	10.2	8.3	11.0	8.3	11.4	8.9	11.8	8.9	12.6	8.8	13.4	8.7
	95	35.0	9.9	8.1	10.1	8.3	10.9	8.3	11.2	8.8	11.7	8.8	12.5	8.8	13.3	8.6
	100	37.5	9.8	8.0	10.0	8.2	10.7	8.2	11.1	8.8	11.6	8.8	12.4	8.7	13.2	8.6
	104	40.0	9.7	8.0	9.9	8.2	10.6	8.1	11.0	8.7	11.4	8.7	12.2	8.7	13.0	8.5
	110	43.0	9.6	7.9	9.7	8.1	10.4	8.1	10.8	8.7	11.3	8.7	12.1	8.6	12.9	8.5
125 (14.0)	68	20.0	13.2	10.2	13.6	10.5	14.6	10.4	15.0	11.1	15.5	11.1	16.5	10.9	17.5	10.8
	73	22.5	13.1	10.1	13.4	10.4	14.4	10.4	14.9	11.0	15.4	11.0	16.4	10.9	17.4	10.7
	77	25.0	13.0	10.1	13.3	10.3	14.3	10.3	14.7	11.0	15.2	10.9	16.2	10.8	17.2	10.7
	82	27.5	12.8	10.0	13.1	10.3	14.0	10.2	14.6	10.9	15.1	10.9	16.1	10.8	17.1	10.6
	86	30.0	12.7	9.9	13.0	10.2	13.9	10.2	14.4	10.8	14.9	10.8	15.9	10.7	16.9	10.5
	91	32.5	12.5	9.9	12.8	10.1	13.7	10.1	14.2	10.8	14.7	10.7	15.8	10.7	16.8	10.5
	95	35.0	12.4	9.8	12.6	10.1	13.6	10.0	14.0	10.7	14.6	10.7	15.7	10.6	16.6	10.5
	100	37.5	12.3	9.7	12.5	10.0	13.4	10.0	13.9	10.6	14.4	10.6	15.5	10.5	16.5	10.4
	104	40.0	12.1	9.7	12.3	9.9	13.2	9.9	13.7	10.6	14.3	10.6	15.3	10.5	16.3	10.3
	110	43.0	12.0	9.6	12.2	9.8	13.1	9.8	13.6	10.5	14.1	10.5	15.1	10.4	16.1	10.3
140 (16.0)	68	20.0	15.1	11.5	15.5	11.9	16.6	11.8	17.2	12.5	17.8	12.5	18.9	12.3	20.0	12.2
	73	22.5	15.0	11.5	15.4	11.8	16.4	11.7	17.0	12.5	17.6	12.4	18.7	12.3	19.9	12.1
	77	25.0	14.8	11.4	15.2	11.7	16.3	11.7	16.8	12.4	17.4	12.4	18.6	12.2	19.7	12.1
	82	27.5	14.6	11.3	15.0	11.6	16.0	11.5	16.6	12.3	17.2	12.3	18.4	12.2	19.5	12.0
	86	30.0	14.5	11.2	14.8	11.5	15.9	11.5	16.4	12.2	17.0	12.2	18.2	12.1	19.3	11.9
	91	32.5	14.3	11.1	14.6	11.4	15.7	11.4	16.3	12.2	16.8	12.1	18.0	12.0	19.2	11.9
	95	35.0	14.2	11.1	14.4	11.3	15.5	11.3	16.0	12.0	16.7	12.0	17.9	12.0	19.0	11.8
	100	37.5	14.0	11.0	14.3	11.3	15.3	11.2	15.9	12.0	16.5	12.0	17.7	11.9	18.8	11.7
	104	40.0	13.8	10.9	14.1	11.2	15.1	11.2	15.7	11.9	16.3	11.9	17.5	11.8	18.6	11.7
	110	43.0	13.7	10.8	13.9	11.1	14.9	11.1	15.5	11.8	16.1	11.8	17.3	11.7	18.4	11.6

kcal/h = kW x 860, Btu/h = kW x 3,412

B6. Cooling capacity with PUHY-HP200-500Y(S)HM

PEFY-P-VMA(L)-E

CA : Capacity(kW) SHC : Sensible Heat Capacity(kW)

Model size (Rated kW)	Outdoor air temp.		Indoor air temp.													
			71 ˚FDB / 59˚FWB		73˚FDB / 61˚FWB		77˚FDB / 64˚FWB		81˚FDB / 66˚FWB		82˚FDB / 68˚FWB		86˚FDB / 72˚FWB		90˚FDB / 75˚FWB	
			21.5˚CDB / 15˚CWB		23˚CDB / 16˚CWB		25˚CDB / 18˚CWB		27˚CDB / 19˚CWB		28˚CDB / 20˚CWB		30˚CDB / 22˚CWB		32˚CDB / 24˚CWB	
	˚FDB	˚CDB	CA	SHC	CA	SHC	CA	SHC	CA	SHC	CA	SHC	CA	SHC	CA	SHC
20 (2.2)	68	20.0	1.9	1.8	2.1	1.9	2.2	1.9	2.4	2.0	2.4	2.0	2.6	2.0	2.7	2.0
	73	22.5	1.9	1.8	2.1	1.9	2.2	1.9	2.4	2.0	2.4	2.0	2.6	2.0	2.7	2.0
	77	25.0	1.9	1.8	2.1	1.9	2.2	1.9	2.4	2.0	2.4	2.0	2.6	2.0	2.7	2.0
	82	27.5	1.9	1.8	2.1	1.9	2.2	1.9	2.3	2.0	2.4	2.0	2.5	2.0	2.6	2.0
	86	30.0	1.9	1.8	2.0	1.9	2.2	1.9	2.3	2.0	2.4	2.0	2.5	2.0	2.6	1.9
	91	32.5	1.9	1.8	2.0	1.9	2.1	1.8	2.2	2.0	2.3	2.0	2.4	2.0	2.5	1.9
	95	35.0	1.9	1.8	2.0	1.9	2.1	1.8	2.2	2.0	2.3	2.0	2.4	1.9	2.5	1.9
	100	37.5	1.9	1.8	2.0	1.8	2.1	1.8	2.2	2.0	2.2	2.0	2.3	1.9	2.4	1.9
	104	40.0	1.9	1.8	1.9	1.8	2.0	1.8	2.1	2.0	2.2	1.9	2.3	1.9	2.4	1.9
	110	43.0	1.9	1.8	1.9	1.8	2.0	1.8	2.1	1.9	2.1	1.9	2.2	1.9	2.3	1.9
25 (2.8)	68	20.0	2.5	2.0	2.7	2.1	2.8	2.1	3.0	2.3	3.1	2.3	3.3	2.2	3.5	2.2
	73	22.5	2.5	2.0	2.7	2.1	2.8	2.1	3.0	2.3	3.1	2.3	3.3	2.2	3.5	2.2
	77	25.0	2.5	2.0	2.7	2.1	2.8	2.1	3.0	2.3	3.1	2.3	3.3	2.2	3.4	2.2
	82	27.5	2.5	2.0	2.6	2.1	2.8	2.1	2.9	2.3	3.0	2.2	3.2	2.2	3.4	2.2
	86	30.0	2.4	2.0	2.6	2.1	2.8	2.1	2.9	2.2	3.0	2.2	3.1	2.2	3.3	2.1
	91	32.5	2.4	2.0	2.6	2.1	2.7	2.1	2.8	2.2	2.9	2.2	3.1	2.2	3.2	2.1
	95	35.0	2.4	2.0	2.5	2.1	2.7	2.0	2.8	2.2	2.9	2.2	3.0	2.1	3.2	2.1
	100	37.5	2.4	2.0	2.5	2.1	2.6	2.0	2.8	2.2	2.8	2.2	3.0	2.1	3.1	2.1
	104	40.0	2.4	2.0	2.5	2.0	2.6	2.0	2.7	2.2	2.8	2.1	2.9	2.1	3.0	2.1
	110	43.0	2.4	2.0	2.4	2.0	2.6	2.0	2.7	2.1	2.7	2.1	2.8	2.1	2.9	2.0
32 (3.6)	68	20.0	3.2	2.4	3.4	2.6	3.6	2.5	3.9	2.7	4.0	2.7	4.2	2.7	4.5	2.7
	73	22.5	3.2	2.4	3.4	2.6	3.6	2.5	3.9	2.7	4.0	2.7	4.2	2.7	4.5	2.7
	77	25.0	3.2	2.4	3.4	2.6	3.6	2.5	3.8	2.7	4.0	2.7	4.2	2.7	4.4	2.6
	82	27.5	3.2	2.4	3.4	2.6	3.6	2.5	3.8	2.7	3.9	2.7	4.1	2.7	4.3	2.6
	86	30.0	3.1	2.4	3.3	2.5	3.5	2.5	3.7	2.7	3.8	2.7	4.0	2.6	4.2	2.6
	91	32.5	3.1	2.4	3.3	2.5	3.5	2.5	3.7	2.7	3.8	2.6	4.0	2.6	4.1	2.5
	95	35.0	3.1	2.4	3.3	2.5	3.4	2.5	3.6	2.6	3.7	2.6	3.9	2.6	4.1	2.5
	100	37.5	3.1	2.4	3.2	2.5	3.4	2.4	3.5	2.6	3.6	2.6	3.8	2.5	4.0	2.5
	104	40.0	3.1	2.4	3.2	2.5	3.3	2.4	3.5	2.6	3.6	2.6	3.7	2.5	3.9	2.5
	110	43.0	3.0	2.4	3.1	2.4	3.3	2.4	3.4	2.6	3.5	2.5	3.6	2.5	3.8	2.4
40 (4.5)	68	20.0	4.0	3.3	4.3	3.5	4.5	3.4	4.8	3.7	5.0	3.7	5.3	3.7	5.6	3.6
	73	22.5	4.0	3.3	4.3	3.5	4.5	3.4	4.8	3.7	5.0	3.7	5.3	3.7	5.6	3.6
	77	25.0	4.0	3.3	4.3	3.5	4.5	3.4	4.8	3.7	5.0	3.7	5.3	3.7	5.5	3.6
	82	27.5	4.0	3.3	4.2	3.5	4.5	3.4	4.7	3.7	4.9	3.7	5.1	3.6	5.4	3.6
	86	30.0	3.9	3.3	4.2	3.4	4.4	3.4	4.7	3.7	4.8	3.7	5.1	3.6	5.3	3.5
	91	32.5	3.9	3.3	4.1	3.4	4.4	3.4	4.6	3.6	4.7	3.6	5.0	3.6	5.2	3.5
	95	35.0	3.9	3.2	4.1	3.4	4.3	3.4	4.5	3.6	4.6	3.6	4.9	3.5	5.1	3.4
	100	37.5	3.9	3.2	4.0	3.4	4.2	3.3	4.4	3.6	4.5	3.6	4.8	3.5	5.0	3.4
	104	40.0	3.8	3.2	4.0	3.4	4.2	3.3	4.4	3.6	4.5	3.5	4.7	3.5	4.9	3.4
	110	43.0	3.8	3.2	3.9	3.3	4.1	3.3	4.3	3.5	4.4	3.5	4.5	3.4	4.7	3.3
50 (5.6)	68	20.0	4.9	4.0	5.3	4.3	5.6	4.2	6.0	4.6	6.2	4.6	6.6	4.5	7.0	4.5
	73	22.5	4.9	4.0	5.3	4.3	5.6	4.2	6.0	4.6	6.2	4.6	6.6	4.5	7.0	4.5
	77	25.0	4.9	4.0	5.3	4.3	5.6	4.2	6.0	4.6	6.2	4.6	6.5	4.5	6.9	4.4
	82	27.5	4.9	4.0	5.3	4.3	5.6	4.2	5.9	4.5	6.1	4.5	6.4	4.5	6.7	4.4
	86	30.0	4.9	4.0	5.2	4.2	5.5	4.2	5.8	4.5	6.0	4.5	6.3	4.4	6.6	4.3
	91	32.5	4.9	4.0	5.1	4.2	5.4	4.1	5.7	4.5	5.9	4.4	6.2	4.4	6.4	4.3
	95	35.0	4.8	4.0	5.1	4.2	5.4	4.1	5.6	4.4	5.8	4.4	6.1	4.3	6.3	4.2
	100	37.5	4.8	4.0	5.0	4.1	5.3	4.1	5.5	4.4	5.7	4.4	5.9	4.3	6.2	4.2
	104	40.0	4.8	4.0	5.0	4.1	5.2	4.1	5.4	4.4	5.6	4.3	5.8	4.2	6.1	4.1
	110	43.0	4.7	4.0	4.9	4.1	5.1	4.0	5.3	4.3	5.4	4.3	5.7	4.2	5.9	4.1
63 (7.1)	68	20.0	6.3	5.0	6.7	5.3	7.2	5.2	7.6	5.7	7.9	5.7	8.4	5.6	8.8	5.5
	73	22.5	6.3	5.0	6.7	5.3	7.2	5.2	7.6	5.7	7.9	5.7	8.4	5.6	8.8	5.5
	77	25.0	6.3	5.0	6.7	5.3	7.2	5.2	7.6	5.7	7.8	5.6	8.3	5.6	8.7	5.4
	82	27.5	6.2	5.0	6.7	5.3	7.1	5.2	7.5	5.6	7.7	5.6	8.1	5.5	8.5	5.4
	86	30.0	6.2	5.0	6.6	5.2	7.0	5.2	7.4	5.6	7.6	5.5	8.0	5.4	8.4	5.3
	91	32.5	6.2	4.9	6.5	5.2	6.9	5.1	7.2	5.5	7.4	5.5	7.8	5.4	8.2	5.3
	95	35.0	6.1	4.9	6.4	5.2	6.8	5.1	7.1	5.5	7.3	5.4	7.7	5.3	8.0	5.2
	100	37.5	6.1	4.9	6.4	5.1	6.7	5.0	7.0	5.4	7.2	5.4	7.5	5.3	7.8	5.1
	104	40.0	6.1	4.9	6.3	5.1	6.6	5.0	6.9	5.4	7.1	5.3	7.4	5.2	7.7	5.1
	110	43.0	6.0	4.9	6.2	5.0	6.5	4.9	6.7	5.3	6.9	5.3	7.2	5.1	7.5	5.0
71 (8.0)	68	20.0	7.1	5.4	7.6	5.7	8.1	5.7	8.6	6.1	8.9	6.1	9.4	6.0	10.0	5.9
	73	22.5	7.1	5.4	7.6	5.7	8.1	5.7	8.6	6.1	8.9	6.1	9.4	6.0	10.0	5.9
	77	25.0	7.1	5.4	7.6	5.7	8.1	5.7	8.6	6.1	8.8	6.1	9.3	6.0	9.8	5.9
	82	27.5	7.0	5.4	7.5	5.7	8.0	5.6	8.4	6.1	8.7	6.0	9.1	5.9	9.6	5.8
	86	30.0	7.0	5.4	7.4	5.7	7.9	5.6	8.3	6.0	8.5	6.0	9.0	5.9	9.4	5.8
	91	32.5	6.9	5.4	7.3	5.6	7.8	5.6	8.1	6.0	8.4	5.9	8.8	5.8	9.2	5.7
	95	35.0	6.9	5.4	7.3	5.6	7.7	5.5	8.0	5.9	8.3	5.9	8.7	5.8	9.0	5.6
	100	37.5	6.9	5.3	7.2	5.5	7.5	5.5	7.9	5.8	8.1	5.8	8.5	5.7	8.8	5.5
	104	40.0	6.8	5.3	7.1	5.5	7.4	5.4	7.7	5.8	8.0	5.7	8.3	5.6	8.7	5.5
	110	43.0	6.8	5.3	7.0	5.4	7.3	5.3	7.6	5.7	7.8	5.7	8.1	5.5	8.4	5.4

kcal/h = kW x 860, Btu/h = kW x 3,412

CT

B6. Cooling capacity with PUHY-HP200-500Y(S)HM

PEFY-P-VMA(L)-E

CA : Capacity(kW) SHC : Sensible Heat Capacity(kW)

Model size (Rated kW)	Outdoor air temp.		Indoor air temp.													
			71 ˚FDB / 59˚FWB		73˚FDB / 61˚FWB		77˚FDB / 64˚FWB		81˚FDB / 66˚FWB		82˚FDB / 68˚FWB		86˚FDB / 72˚FWB		90˚FDB / 75˚FWB	
			21.5˚CDB / 15˚CWB		23˚CDB / 16˚CWB		25˚CDB / 18˚CWB		27˚CDB / 19˚CWB		28˚CDB / 20˚CWB		30˚CDB / 22˚CWB		32˚CDB / 24˚CWB	
	˚FDB	˚CDB	CA	SHC	CA	SHC	CA	SHC	CA	SHC	CA	SHC	CA	SHC	CA	SHC
80 (9.0)	68	20.0	7.9	5.8	8.5	6.1	9.1	6.1	9.6	6.6	10.0	6.6	10.6	6.5	11.2	6.4
	73	22.5	7.9	5.8	8.5	6.1	9.1	6.1	9.6	6.6	10.0	6.6	10.6	6.5	11.2	6.4
	77	25.0	7.9	5.8	8.5	6.1	9.1	6.1	9.6	6.6	10.0	6.5	10.5	6.4	11.0	6.3
	82	27.5	7.9	5.8	8.5	6.1	9.0	6.1	9.5	6.5	9.8	6.5	10.3	6.3	10.8	6.2
	86	30.0	7.9	5.8	8.4	6.1	8.9	6.0	9.3	6.4	9.6	6.4	10.1	6.3	10.6	6.1
	91	32.5	7.8	5.8	8.3	6.0	8.7	5.9	9.2	6.3	9.4	6.3	9.9	6.2	10.4	6.0
	95	35.0	7.8	5.7	8.2	6.0	8.6	5.9	9.0	6.3	9.3	6.2	9.7	6.1	10.2	6.0
	100	37.5	7.7	5.7	8.1	5.9	8.5	5.8	8.9	6.2	9.1	6.2	9.5	6.0	9.9	5.9
	104	40.0	7.7	5.7	8.0	5.9	8.4	5.8	8.7	6.2	9.0	6.1	9.4	6.0	9.7	5.8
	110	43.0	7.6	5.7	7.8	5.8	8.2	5.7	8.5	6.1	8.7	6.0	9.1	5.9	9.5	5.7
100 (11.2)	68	20.0	9.9	8.0	10.6	8.5	11.3	8.4	12.0	9.1	12.5	9.1	13.2	9.0	13.9	8.9
	73	22.5	9.9	8.0	10.6	8.5	11.3	8.4	12.0	9.1	12.5	9.1	13.2	9.0	13.9	8.9
	77	25.0	9.9	8.0	10.6	8.5	11.3	8.4	12.0	9.1	12.4	9.1	13.1	9.0	13.7	8.8
	82	27.5	9.8	8.0	10.5	8.5	11.2	8.4	11.8	9.0	12.2	9.0	12.8	8.9	13.4	8.7
	86	30.0	9.8	8.0	10.4	8.4	11.0	8.3	11.6	9.0	12.0	8.9	12.6	8.8	13.2	8.6
	91	32.5	9.7	8.0	10.3	8.4	10.9	8.3	11.4	8.9	11.7	8.8	12.3	8.7	12.9	8.5
	95	35.0	9.7	7.9	10.2	8.3	10.7	8.2	11.2	8.8	11.6	8.8	12.1	8.6	12.7	8.4
	100	37.5	9.6	7.9	10.0	8.2	10.6	8.1	11.0	8.7	11.3	8.7	11.8	8.5	12.4	8.3
	104	40.0	9.6	7.9	9.9	8.2	10.4	8.1	10.8	8.7	11.1	8.6	11.6	8.4	12.1	8.2
	110	43.0	9.5	7.9	9.8	8.1	10.2	8.0	10.6	8.6	10.9	8.5	11.3	8.3	11.8	8.1
125 (14.0)	68	20.0	12.3	9.8	13.3	10.3	14.1	10.3	15.0	11.1	15.6	11.1	16.5	10.9	17.4	10.7
	73	22.5	12.3	9.8	13.3	10.3	14.1	10.3	15.0	11.1	15.6	11.1	16.5	10.9	17.4	10.7
	77	25.0	12.3	9.8	13.3	10.3	14.1	10.3	15.0	11.1	15.5	11.0	16.3	10.9	17.2	10.7
	82	27.5	12.3	9.8	13.2	10.3	14.0	10.2	14.7	11.0	15.2	10.9	16.0	10.7	16.8	10.5
	86	30.0	12.2	9.7	13.0	10.2	13.8	10.1	14.5	10.9	15.0	10.8	15.7	10.6	16.5	10.4
	91	32.5	12.2	9.7	12.8	10.1	13.6	10.0	14.2	10.8	14.7	10.7	15.4	10.5	16.1	10.3
	95	35.0	12.1	9.7	12.7	10.1	13.4	9.9	14.0	10.7	14.4	10.6	15.1	10.4	15.8	10.2
	100	37.5	12.0	9.6	12.5	10.0	13.2	9.9	13.8	10.6	14.2	10.5	14.8	10.3	15.5	10.1
	104	40.0	12.0	9.6	12.4	9.9	13.0	9.8	13.6	10.5	13.9	10.4	14.5	10.2	15.2	10.0
	110	43.0	11.9	9.5	12.2	9.8	12.8	9.7	13.3	10.4	13.6	10.3	14.2	10.1	14.7	9.8
140 (16.0)	68	20.0	14.1	11.0	15.1	11.7	16.1	11.6	17.1	12.5	17.8	12.5	18.8	12.3	19.9	12.1
	73	22.5	14.1	11.0	15.1	11.7	16.1	11.6	17.1	12.5	17.8	12.5	18.8	12.3	19.9	12.1
	77	25.0	14.1	11.0	15.1	11.7	16.1	11.6	17.1	12.5	17.7	12.5	18.7	12.3	19.6	12.0
	82	27.5	14.1	11.0	15.0	11.6	16.0	11.5	16.8	12.4	17.4	12.3	18.3	12.1	19.2	11.9
	86	30.0	14.0	11.0	14.9	11.6	15.8	11.4	16.6	12.3	17.1	12.2	18.0	12.0	18.9	11.8
	91	32.5	13.9	10.9	14.7	11.5	15.5	11.3	16.3	12.2	16.8	12.1	17.6	11.9	18.4	11.6
	95	35.0	13.8	10.9	14.5	11.4	15.3	11.2	16.0	12.1	16.5	12.0	17.3	11.8	18.1	11.5
	100	37.5	13.7	10.9	14.3	11.3	15.1	11.1	15.7	11.9	16.2	11.8	16.9	11.6	17.7	11.3
	104	40.0	13.7	10.8	14.2	11.2	14.9	11.0	15.5	11.8	15.9	11.7	16.6	11.5	17.3	11.2
	110	43.0	13.6	10.8	13.9	11.1	14.6	10.9	15.1	11.7	15.5	11.6	16.2	11.3	16.8	11.1

kcal/h = kW x 860, Btu/h = kW x 3,412

B7. Cooling capacity with PQHY-P200-900Y(S)HM PQRY-P200-600Y(S)HM

PEFY-P-VMA(L)-E

CA : Capacity(kW) SHC : Sensible Heat Capacity(kW)

Model size (Rated kW)	Water temp.		Indoor air temp.													
			71 ˚FDB / 59˚FWB		73˚FDB / 61˚FWB		77˚FDB / 64˚FWB		81˚FDB / 66˚FWB		82˚FDB / 68˚FWB		86˚FDB / 72˚FWB		90˚FDB / 75˚FWB	
			21.5˚CDB / 15˚CWB		23˚CDB / 16˚CWB		25˚CDB / 18˚CWB		27˚CDB / 19˚CWB		28˚CDB / 20˚CWB		30˚CDB / 22˚CWB		32˚CDB / 24˚CWB	
	˚F	˚C	CA	SHC	CA	SHC	CA	SHC	CA	SHC	CA	SHC	CA	SHC	CA	SHC
20 (2.2)	50	10.0	2.0	1.8	2.0	1.9	2.1	1.8	2.2	2.0	2.2	2.0	2.2	1.9	2.2	1.8
	68	20.0	2.0	1.8	2.0	1.9	2.1	1.8	2.2	2.0	2.2	2.0	2.2	1.9	2.2	1.8
	86	30.0	2.0	1.8	2.0	1.9	2.1	1.8	2.2	2.0	2.2	2.0	2.2	1.9	2.2	1.8
	104	40.0	1.8	1.7	1.8	1.8	1.9	1.8	2.0	1.9	2.0	1.9	2.0	1.8	2.0	1.7
	113	45.0	1.7	1.7	1.7	1.7	1.8	1.7	1.8	1.8	1.8	1.8	1.8	1.8	1.8	1.7
25 (2.8)	50	10.0	2.5	2.0	2.6	2.1	2.7	2.1	2.8	2.2	2.8	2.2	2.8	2.1	2.8	2.0
	68	20.0	2.5	2.0	2.6	2.1	2.7	2.1	2.8	2.2	2.8	2.2	2.8	2.1	2.8	2.0
	86	30.0	2.5	2.0	2.6	2.1	2.7	2.1	2.8	2.2	2.8	2.2	2.8	2.1	2.8	2.0
	104	40.0	2.2	1.9	2.3	2.0	2.4	1.9	2.5	2.1	2.5	2.0	2.5	2.0	2.5	1.9
	113	45.0	2.1	1.8	2.2	1.9	2.3	1.9	2.3	2.0	2.3	2.0	2.3	1.9	2.3	1.8
32 (3.6)	50	10.0	3.2	2.5	3.3	2.5	3.5	2.5	3.6	2.6	3.6	2.6	3.6	2.5	3.6	2.4
	68	20.0	3.2	2.5	3.3	2.5	3.5	2.5	3.6	2.6	3.6	2.6	3.6	2.5	3.6	2.4
	86	30.0	3.2	2.5	3.3	2.5	3.5	2.5	3.6	2.6	3.6	2.6	3.6	2.5	3.6	2.4
	104	40.0	2.9	2.3	3.0	2.4	3.1	2.3	3.2	2.5	3.2	2.4	3.2	2.3	3.2	2.2
	113	45.0	2.7	2.2	2.8	2.3	2.9	2.2	3.0	2.4	3.0	2.3	3.0	2.2	3.0	2.2
40 (4.5)	50	10.0	4.1	3.3	4.2	3.4	4.4	3.4	4.5	3.6	4.5	3.5	4.5	3.4	4.5	3.3
	68	20.0	4.1	3.3	4.2	3.4	4.4	3.4	4.5	3.6	4.5	3.5	4.5	3.4	4.5	3.3
	86	30.0	4.1	3.3	4.2	3.4	4.4	3.4	4.5	3.6	4.5	3.5	4.5	3.4	4.5	3.3
	104	40.0	3.6	3.1	3.7	3.2	3.9	3.2	4.0	3.4	4.0	3.3	4.0	3.2	4.0	3.1
	113	45.0	3.4	3.0	3.5	3.1	3.7	3.1	3.8	3.3	3.8	3.3	3.8	3.1	3.8	3.0
50 (5.6)	50	10.0	5.0	4.1	5.2	4.2	5.5	4.2	5.6	4.4	5.6	4.3	5.6	4.2	5.6	4.0
	68	20.0	5.0	4.1	5.2	4.2	5.5	4.2	5.6	4.4	5.6	4.3	5.6	4.2	5.6	4.0
	86	30.0	5.0	4.1	5.2	4.2	5.5	4.2	5.6	4.4	5.6	4.3	5.6	4.2	5.6	4.0
	104	40.0	4.5	3.8	4.6	4.0	4.9	3.9	5.0	4.2	5.0	4.1	5.0	3.9	5.0	3.8
	113	45.0	4.2	3.7	4.3	3.8	4.6	3.8	4.7	4.1	4.7	4.0	4.7	3.8	4.7	3.7
63 (7.1)	50	10.0	6.4	5.1	6.6	5.2	6.9	5.1	7.1	5.5	7.1	5.3	7.1	5.1	7.1	4.9
	68	20.0	6.4	5.1	6.6	5.2	6.9	5.1	7.1	5.5	7.1	5.3	7.1	5.1	7.1	4.9
	86	30.0	6.4	5.1	6.6	5.2	6.9	5.1	7.1	5.5	7.1	5.3	7.1	5.1	7.1	4.9
	104	40.0	5.7	4.7	5.8	4.9	6.2	4.8	6.3	5.1	6.3	5.0	6.3	4.8	6.3	4.6
	113	45.0	5.3	4.6	5.5	4.7	5.8	4.7	5.9	5.0	5.9	4.9	5.9	4.7	5.9	4.5
71 (8.0)	50	10.0	7.2	5.5	7.4	5.6	7.8	5.6	8.0	5.9	8.0	5.8	8.0	5.5	8.0	5.3
	68	20.0	7.2	5.5	7.4	5.6	7.8	5.6	8.0	5.9	8.0	5.8	8.0	5.5	8.0	5.3
	86	30.0	7.2	5.5	7.4	5.6	7.8	5.6	8.0	5.9	8.0	5.8	8.0	5.5	8.0	5.3
	104	40.0	6.4	5.1	6.6	5.3	6.9	5.2	7.1	5.5	7.1	5.4	7.1	5.2	7.1	5.0
	113	45.0	6.0	4.9	6.2	5.1	6.5	5.0	6.7	5.3	6.7	5.2	6.7	5.0	6.7	4.8
80 (9.0)	50	10.0	8.1	5.9	8.3	6.1	8.8	6.0	9.0	6.3	9.0	6.1	9.0	5.8	9.0	5.6
	68	20.0	8.1	5.9	8.3	6.1	8.8	6.0	9.0	6.3	9.0	6.1	9.0	5.8	9.0	5.6
	86	30.0	8.1	5.9	8.3	6.1	8.8	6.0	9.0	6.3	9.0	6.1	9.0	5.8	9.0	5.6
	104	40.0	7.2	5.5	7.4	5.6	7.8	5.5	8.0	5.8	8.0	5.7	8.0	5.5	8.0	5.2
	113	45.0	6.8	5.2	7.0	5.4	7.3	5.3	7.5	5.6	7.5	5.5	7.5	5.3	7.5	5.0
100 (11.2)	50	10.0	10.1	8.1	10.4	8.4	10.9	8.3	11.2	8.8	11.2	8.6	11.2	8.3	11.2	7.9
	68	20.0	10.1	8.1	10.4	8.4	10.9	8.3	11.2	8.8	11.2	8.6	11.2	8.3	11.2	7.9
	86	30.0	10.1	8.1	10.4	8.4	10.9	8.3	11.2	8.8	11.2	8.6	11.2	8.3	11.2	7.9
	104	40.0	9.0	7.6	9.2	7.9	9.7	7.8	10.0	8.3	10.0	8.2	10.0	7.8	10.0	7.5
	113	45.0	8.4	7.4	8.7	7.6	9.1	7.5	9.4	8.1	9.4	7.9	9.4	7.6	9.4	7.4
125 (14.0)	50	10.0	12.6	9.9	13.0	10.2	13.7	10.1	14.0	10.7	14.0	10.4	14.0	10.0	14.0	9.6
	68	20.0	12.6	9.9	13.0	10.2	13.7	10.1	14.0	10.7	14.0	10.4	14.0	10.0	14.0	9.6
	86	30.0	12.6	9.9	13.0	10.2	13.7	10.1	14.0	10.7	14.0	10.4	14.0	10.0	14.0	9.6
	104	40.0	11.2	9.2	11.5	9.5	12.1	9.4	12.5	10.0	12.5	9.8	12.5	9.4	12.5	9.1
	113	45.0	10.5	8.9	10.8	9.2	11.4	9.1	11.7	9.7	11.7	9.5	11.7	9.2	11.7	8.8
140 (16.0)	50	10.0	14.4	11.2	14.8	11.5	15.6	11.4	16.0	12.0	16.0	11.8	16.0	11.3	16.0	10.8
	68	20.0	14.4	11.2	14.8	11.5	15.6	11.4	16.0	12.0	16.0	11.8	16.0	11.3	16.0	10.8
	86	30.0	14.4	11.2	14.8	11.5	15.6	11.4	16.0	12.0	16.0	11.8	16.0	11.3	16.0	10.8
	104	40.0	12.8	10.4	13.2	10.8	13.9	10.6	14.2	11.3	14.2	11.1	14.2	10.6	14.2	10.2
	113	45.0	12.0	10.1	12.4	10.4	13.0	10.3	13.4	11.0	13.4	10.7	13.4	10.3	13.4	9.9

kcal/h = kW x 860, Btu/h = kW x 3,412

B8. Cooling capacity with PUMY-P100,125,140YHMB,VHMB

CT

PEFY-P-VMA(L)-E

CA : Capacity(kW) SHC : Sensible Heat Capacity(kW)

Model size (Rated kW)	Outdoor air temp.		Indoor air temp.													
			71 ˚FDB / 59˚FWB		73˚FDB / 61˚FWB		77˚FDB / 64˚FWB		81˚FDB / 66˚FWB		82˚FDB / 68˚FWB		86˚FDB / 72˚FWB		90˚FDB / 75˚FWB	
			21.5˚CDB / 15˚CWB		23˚CDB / 16˚CWB		25˚CDB / 18˚CWB		27˚CDB / 19˚CWB		28˚CDB / 20˚CWB		30˚CDB / 22˚CWB		32˚CDB / 24˚CWB	
	˚FDB	˚CDB	CA	SHC	CA	SHC	CA	SHC	CA	SHC	CA	SHC	CA	SHC	CA	SHC
20 (2.2)	68	20.0	2.1	1.8	2.2	1.9	2.3	1.9	2.4	2.1	2.4	2.0	2.6	2.0	2.7	2.0
	73	22.5	2.0	1.8	2.1	1.9	2.3	1.9	2.3	2.0	2.4	2.0	2.6	2.0	2.7	2.0
	77	25.0	2.0	1.8	2.1	1.9	2.2	1.9	2.3	2.0	2.4	2.0	2.5	2.0	2.6	2.0
	82	27.5	2.0	1.8	2.1	1.9	2.2	1.9	2.3	2.0	2.4	2.0	2.5	2.0	2.6	2.0
	86	30.0	2.0	1.8	2.1	1.9	2.2	1.9	2.3	2.0	2.3	2.0	2.5	2.0	2.6	1.9
	91	32.5	1.9	1.8	2.0	1.9	2.2	1.9	2.2	2.0	2.3	2.0	2.4	2.0	2.6	1.9
	95	35.0	1.9	1.8	2.0	1.9	2.1	1.9	2.2	2.0	2.3	2.0	2.4	2.0	2.5	1.9
	100	37.5	1.9	1.8	2.0	1.8	2.1	1.8	2.2	2.0	2.2	2.0	2.4	1.9	2.5	1.9
	104	40.0	1.8	1.7	1.9	1.8	2.1	1.8	2.1	2.0	2.2	2.0	2.4	1.9	2.5	1.9
	110	43.0	1.8	1.7	1.9	1.8	2.1	1.8	2.1	2.0	2.2	1.9	2.3	1.9	2.4	1.9
25 (2.8)	68	20.0	2.6	2.1	2.8	2.2	2.9	2.1	3.0	2.3	3.1	2.3	3.3	2.2	3.4	2.2
	73	22.5	2.6	2.1	2.7	2.2	2.9	2.1	3.0	2.3	3.1	2.3	3.2	2.2	3.4	2.2
	77	25.0	2.6	2.1	2.7	2.1	2.9	2.1	2.9	2.3	3.0	2.2	3.2	2.2	3.4	2.2
	82	27.5	2.5	2.0	2.7	2.1	2.8	2.1	2.9	2.2	3.0	2.2	3.2	2.2	3.3	2.2
	86	30.0	2.5	2.0	2.6	2.1	2.8	2.1	2.9	2.2	3.0	2.2	3.2	2.2	3.3	2.1
	91	32.5	2.5	2.0	2.6	2.1	2.8	2.1	2.8	2.2	2.9	2.2	3.1	2.2	3.3	2.1
	95	35.0	2.4	2.0	2.6	2.1	2.7	2.1	2.8	2.2	2.9	2.2	3.1	2.2	3.2	2.1
	100	37.5	2.4	2.0	2.5	2.1	2.7	2.1	2.8	2.2	2.8	2.2	3.0	2.2	3.2	2.1
	104	40.0	2.3	1.9	2.5	2.0	2.7	2.0	2.7	2.2	2.8	2.2	3.0	2.1	3.2	2.1
	110	43.0	2.3	1.9	2.4	2.0	2.6	2.0	2.7	2.2	2.7	2.1	3.0	2.1	3.1	2.1
32 (3.6)	68	20.0	3.4	2.5	3.6	2.6	3.7	2.6	3.9	2.8	4.0	2.7	4.2	2.7	4.4	2.6
	73	22.5	3.3	2.5	3.5	2.6	3.7	2.6	3.8	2.7	4.0	2.7	4.2	2.7	4.4	2.6
	77	25.0	3.3	2.5	3.5	2.6	3.7	2.6	3.8	2.7	3.9	2.7	4.1	2.7	4.3	2.6
	82	27.5	3.3	2.5	3.4	2.6	3.6	2.5	3.7	2.7	3.9	2.7	4.1	2.6	4.3	2.6
	86	30.0	3.2	2.5	3.4	2.6	3.6	2.5	3.7	2.7	3.8	2.7	4.1	2.6	4.2	2.6
	91	32.5	3.2	2.4	3.3	2.5	3.6	2.5	3.7	2.7	3.8	2.6	4.0	2.6	4.2	2.6
	95	35.0	3.1	2.4	3.3	2.5	3.5	2.5	3.6	2.6	3.7	2.6	4.0	2.6	4.2	2.5
	100	37.5	3.1	2.4	3.2	2.5	3.5	2.5	3.6	2.6	3.7	2.6	3.9	2.6	4.1	2.5
	104	40.0	3.0	2.3	3.2	2.5	3.4	2.5	3.5	2.6	3.6	2.6	3.9	2.6	4.1	2.5
	110	43.0	2.9	2.3	3.1	2.4	3.4	2.4	3.4	2.6	3.5	2.5	3.8	2.5	4.0	2.5
40 (4.5)	68	20.0	4.2	3.4	4.4	3.6	4.7	3.5	4.8	3.7	5.0	3.7	5.3	3.7	5.5	3.6
	73	22.5	4.2	3.4	4.4	3.5	4.6	3.5	4.8	3.7	4.9	3.7	5.2	3.7	5.5	3.6
	77	25.0	4.1	3.4	4.3	3.5	4.6	3.5	4.7	3.7	4.9	3.7	5.2	3.6	5.4	3.6
	82	27.5	4.1	3.3	4.3	3.5	4.5	3.5	4.7	3.7	4.8	3.7	5.1	3.6	5.4	3.5
	86	30.0	4.0	3.3	4.2	3.5	4.5	3.4	4.6	3.7	4.8	3.6	5.1	3.6	5.3	3.5
	91	32.5	4.0	3.3	4.2	3.4	4.4	3.4	4.6	3.6	4.7	3.6	5.0	3.6	5.3	3.5
	95	35.0	3.9	3.3	4.1	3.4	4.4	3.4	4.5	3.6	4.6	3.6	4.9	3.6	5.2	3.5
	100	37.5	3.8	3.2	4.0	3.4	4.3	3.4	4.5	3.6	4.6	3.6	4.9	3.5	5.1	3.5
	104	40.0	3.8	3.2	4.0	3.3	4.3	3.3	4.4	3.6	4.5	3.5	4.8	3.5	5.1	3.4
	110	43.0	3.7	3.1	3.9	3.3	4.2	3.3	4.3	3.5	4.4	3.5	4.8	3.5	5.0	3.4
50 (5.6)	68	20.0	5.3	4.2	5.5	4.4	5.8	4.3	6.0	4.6	6.2	4.6	6.6	4.5	6.9	4.4
	73	22.5	5.2	4.2	5.5	4.4	5.8	4.3	6.0	4.6	6.1	4.6	6.5	4.5	6.8	4.4
	77	25.0	5.2	4.1	5.4	4.3	5.7	4.3	5.9	4.6	6.1	4.5	6.4	4.5	6.7	4.4
	82	27.5	5.1	4.1	5.3	4.3	5.7	4.2	5.8	4.5	6.0	4.5	6.4	4.4	6.7	4.4
	86	30.0	5.0	4.1	5.3	4.3	5.6	4.2	5.8	4.5	5.9	4.5	6.3	4.4	6.6	4.3
	91	32.5	4.9	4.0	5.2	4.2	5.5	4.2	5.7	4.5	5.9	4.4	6.2	4.4	6.5	4.3
	95	35.0	4.9	4.0	5.1	4.2	5.5	4.2	5.6	4.4	5.8	4.4	6.2	4.4	6.5	4.3
	100	37.5	4.8	4.0	5.0	4.2	5.4	4.1	5.5	4.4	5.7	4.4	6.1	4.3	6.4	4.3
	104	40.0	4.7	3.9	4.9	4.1	5.3	4.1	5.5	4.4	5.6	4.3	6.0	4.3	6.3	4.2
	110	43.0	4.6	3.9	4.8	4.1	5.2	4.1	5.4	4.3	5.5	4.3	5.9	4.3	6.2	4.2
63 (7.1)	68	20.0	6.7	5.2	7.0	5.4	7.4	5.3	7.6	5.7	7.9	5.7	8.3	5.6	8.7	5.4
	73	22.5	6.6	5.2	6.9	5.4	7.3	5.3	7.6	5.6	7.8	5.6	8.2	5.5	8.6	5.4
	77	25.0	6.5	5.1	6.9	5.3	7.2	5.3	7.5	5.6	7.7	5.6	8.2	5.5	8.5	5.4
	82	27.5	6.5	5.1	6.8	5.3	7.2	5.2	7.4	5.6	7.6	5.5	8.1	5.5	8.5	5.4
	86	30.0	6.4	5.0	6.7	5.3	7.1	5.2	7.3	5.5	7.5	5.5	8.0	5.4	8.4	5.3
	91	32.5	6.3	5.0	6.6	5.2	7.0	5.2	7.2	5.5	7.4	5.5	7.9	5.4	8.3	5.3
	95	35.0	6.2	4.9	6.5	5.2	6.9	5.1	7.1	5.5	7.3	5.4	7.8	5.4	8.2	5.3
	100	37.5	6.1	4.9	6.4	5.1	6.8	5.1	7.0	5.4	7.2	5.4	7.7	5.3	8.1	5.2
	104	40.0	5.9	4.8	6.3	5.1	6.8	5.1	6.9	5.4	7.1	5.3	7.6	5.3	8.0	5.2
	110	43.0	5.8	4.8	6.1	5.0	6.6	5.0	6.8	5.3	6.9	5.3	7.5	5.3	7.9	5.2
71 (8.0)	68	20.0	7.5	5.6	7.9	5.9	8.3	5.8	8.6	6.2	8.9	6.1	9.4	6.0	9.8	5.9
	73	22.5	7.4	5.6	7.8	5.8	8.3	5.8	8.5	6.1	8.8	6.1	9.3	6.0	9.7	5.9
	77	25.0	7.4	5.6	7.7	5.8	8.2	5.7	8.4	6.1	8.7	6.0	9.2	6.0	9.6	5.8
	82	27.5	7.3	5.5	7.6	5.8	8.1	5.7	8.3	6.0	8.6	6.0	9.1	5.9	9.5	5.8
	86	30.0	7.2	5.5	7.5	5.7	8.0	5.7	8.2	6.0	8.5	6.0	9.0	5.9	9.4	5.8
	91	32.5	7.1	5.4	7.4	5.7	7.9	5.6	8.1	6.0	8.4	5.9	8.9	5.8	9.3	5.7
	95	35.0	6.9	5.4	7.3	5.6	7.8	5.6	8.0	5.9	8.2	5.9	8.8	5.8	9.2	5.7
	100	37.5	6.8	5.3	7.2	5.6	7.7	5.5	7.9	5.9	8.1	5.8	8.7	5.8	9.1	5.7
	104	40.0	6.7	5.2	7.1	5.5	7.6	5.5	7.8	5.8	8.0	5.8	8.6	5.7	9.0	5.6
	110	43.0	6.5	5.2	6.9	5.4	7.5	5.4	7.7	5.8	7.8	5.7	8.5	5.7	8.9	5.6

kcal/h = kW x 860, Btu/h = kW x 3,412

B8. Cooling capacity with PUMY-P100,125,140YHMB,VHMB

PEFY-P-VMA(L)-E

CA : Capacity(kW) SHC : Sensible Heat Capacity(kW)

Model size (Rated kW)	Outdoor air temp.		Indoor air temp.													
			71 ˚FDB / 59˚FWB		73˚FDB / 61˚FWB		77˚FDB / 64˚FWB		81˚FDB / 66˚FWB		82˚FDB / 68˚FWB		86˚FDB / 72˚FWB		90˚FDB / 75˚FWB	
			21.5˚CDB / 15˚CWB		23˚CDB / 16˚CWB		25˚CDB / 18˚CWB		27˚CDB / 19˚CWB		28˚CDB / 20˚CWB		30˚CDB / 22˚CWB		32˚CDB / 24˚CWB	
	˚FDB	˚CDB	CA	SHC	CA	SHC	CA	SHC	CA	SHC	CA	SHC	CA	SHC	CA	SHC
80 (9.0)	68	20.0	8.5	6.1	8.9	6.3	9.4	6.2	9.7	6.6	10.0	6.6	10.5	6.4	11.0	6.3
	73	22.5	8.4	6.0	8.8	6.3	9.3	6.2	9.6	6.5	9.9	6.5	10.4	6.4	10.9	6.3
	77	25.0	8.3	6.0	8.7	6.2	9.2	6.2	9.5	6.5	9.8	6.5	10.3	6.4	10.8	6.2
	82	27.5	8.2	5.9	8.6	6.2	9.1	6.1	9.4	6.4	9.7	6.4	10.2	6.3	10.7	6.2
	86	30.0	8.1	5.9	8.5	6.1	9.0	6.1	9.3	6.4	9.5	6.4	10.1	6.3	10.6	6.1
	91	32.5	7.9	5.8	8.4	6.1	8.9	6.0	9.1	6.3	9.4	6.3	10.0	6.2	10.5	6.1
	95	35.0	7.8	5.8	8.2	6.0	8.8	6.0	9.0	6.3	9.3	6.2	9.9	6.2	10.4	6.1
	100	37.5	7.7	5.7	8.1	5.9	8.7	5.9	8.9	6.2	9.1	6.2	9.8	6.1	10.3	6.0
	104	40.0	7.5	5.6	8.0	5.9	8.6	5.9	8.8	6.2	9.0	6.1	9.7	6.1	10.1	6.0
	110	43.0	7.3	5.5	7.8	5.8	8.4	5.8	8.6	6.1	8.8	6.0	9.5	6.0	10.0	5.9
100 (11.2)	68	20.0	10.5	8.3	11.1	8.7	11.7	8.6	12.0	9.2	12.4	9.1	13.1	9.0	13.7	8.8
	73	22.5	10.4	8.3	10.9	8.7	11.6	8.5	11.9	9.1	12.3	9.1	13.0	8.9	13.6	8.7
	77	25.0	10.3	8.2	10.8	8.6	11.4	8.5	11.8	9.1	12.2	9.0	12.9	8.9	13.5	8.7
	82	27.5	10.2	8.2	10.7	8.5	11.3	8.4	11.7	9.0	12.0	9.0	12.7	8.8	13.4	8.7
	86	30.0	10.0	8.1	10.5	8.5	11.2	8.4	11.5	8.9	11.9	8.9	12.6	8.8	13.2	8.6
	91	32.5	9.9	8.0	10.4	8.4	11.1	8.3	11.4	8.9	11.7	8.8	12.5	8.7	13.1	8.6
	95	35.0	9.7	8.0	10.2	8.3	10.9	8.3	11.2	8.8	11.5	8.8	12.3	8.7	12.9	8.5
	100	37.5	9.5	7.9	10.1	8.3	10.8	8.2	11.1	8.8	11.4	8.7	12.2	8.6	12.8	8.5
	104	40.0	9.4	7.8	9.9	8.2	10.7	8.2	10.9	8.7	11.2	8.6	12.0	8.6	12.6	8.4
	110	43.0	9.1	7.7	9.7	8.1	10.5	8.1	10.7	8.6	11.0	8.5	11.8	8.5	12.4	8.4
125 (14.0)	68	20.0	13.2	10.2	13.8	10.6	14.6	10.5	15.1	11.1	15.5	11.1	16.4	10.9	17.2	10.7
	73	22.5	13.0	10.1	13.7	10.5	14.4	10.4	14.9	11.1	15.4	11.0	16.2	10.8	17.0	10.6
	77	25.0	12.9	10.0	13.5	10.5	14.3	10.3	14.7	11.0	15.2	10.9	16.1	10.8	16.9	10.5
	82	27.5	12.7	10.0	13.4	10.4	14.1	10.3	14.6	10.9	15.0	10.9	15.9	10.7	16.7	10.5
	86	30.0	12.5	9.9	13.2	10.3	14.0	10.2	14.4	10.8	14.8	10.8	15.8	10.6	16.5	10.4
	91	32.5	12.4	9.8	13.0	10.2	13.8	10.1	14.2	10.8	14.6	10.7	15.6	10.6	16.3	10.4
	95	35.0	12.2	9.7	12.8	10.1	13.7	10.1	14.0	10.7	14.4	10.6	15.4	10.5	16.2	10.3
	100	37.5	11.9	9.6	12.6	10.0	13.5	10.0	13.8	10.6	14.2	10.5	15.2	10.4	16.0	10.2
	104	40.0	11.7	9.5	12.4	9.9	13.3	9.9	13.7	10.5	14.0	10.4	15.0	10.4	15.8	10.2
	110	43.0	11.4	9.3	12.1	9.8	13.1	9.8	13.4	10.4	13.7	10.3	14.8	10.3	15.6	10.1
140 (16.0)	68	20.0	15.0	11.5	15.8	12.0	16.7	11.8	17.2	12.6	17.7	12.5	18.7	12.3	19.6	12.0
	73	22.5	14.9	11.4	15.6	11.9	16.5	11.7	17.0	12.5	17.6	12.4	18.6	12.2	19.5	12.0
	77	25.0	14.7	11.3	15.5	11.8	16.3	11.7	16.8	12.4	17.4	12.3	18.4	12.2	19.3	11.9
	82	27.5	14.5	11.2	15.3	11.7	16.2	11.6	16.7	12.3	17.2	12.2	18.2	12.1	19.1	11.8
	86	30.0	14.3	11.2	15.1	11.6	16.0	11.5	16.5	12.2	16.9	12.2	18.0	12.0	18.9	11.8
	91	32.5	14.1	11.0	14.9	11.5	15.8	11.4	16.3	12.2	16.7	12.1	17.8	11.9	18.7	11.7
	95	35.0	13.9	10.9	14.6	11.4	15.6	11.4	16.0	12.0	16.5	12.0	17.6	11.9	18.5	11.6
	100	37.5	13.6	10.8	14.4	11.3	15.4	11.3	15.8	12.0	16.2	11.9	17.4	11.8	18.3	11.5
	104	40.0	13.4	10.7	14.1	11.2	15.2	11.2	15.6	11.9	16.0	11.8	17.2	11.7	18.0	11.5
	110	43.0	13.0	10.5	13.8	11.1	15.0	11.1	15.3	11.8	15.7	11.6	16.9	11.6	17.8	11.4

kcal/h = kW x 860, Btu/h = kW x 3,412

CT

D1. Cooling capacity with PUHY-P200, 250YHM/PUHY-EP200, 250YHM PURY-P200, 250YHM/PURY-EP200, 250YHM

PMFY-P-VBM-E

CA : Capacity(kW) SHC : Sensible Heat Capacity(kW)

Model size (Rated kW)	Outdoor air temp.		Indoor air temp.													
			71 ˚FDB / 59˚FWB		73˚FDB / 61˚FWB		77˚FDB / 64˚FWB		81˚FDB / 66˚FWB		82˚FDB / 68˚FWB		86˚FDB / 72˚FWB		90˚FDB / 75˚FWB	
			21.5˚CDB / 15˚CWB		23˚CDB / 16˚CWB		25˚CDB / 18˚CWB		27˚CDB / 19˚CWB		28˚CDB / 20˚CWB		30˚CDB / 22˚CWB		32˚CDB / 24˚CWB	
	˚FDB	˚CDB	CA	SHC	CA	SHC	CA	SHC	CA	SHC	CA	SHC	CA	SHC	CA	SHC
20 (2.2)	68	20.0	2.1	1.7	2.2	1.7	2.3	1.7	2.4	1.8	2.5	1.8	2.6	1.8	2.8	1.8
	73	22.5	2.1	1.7	2.2	1.7	2.3	1.7	2.4	1.8	2.5	1.8	2.6	1.8	2.8	1.8
	77	25.0	2.1	1.7	2.2	1.7	2.3	1.7	2.4	1.8	2.4	1.8	2.6	1.8	2.7	1.8
	82	27.5	2.1	1.7	2.1	1.7	2.3	1.7	2.3	1.7	2.4	1.8	2.5	1.8	2.7	1.8
	86	30.0	2.0	1.7	2.1	1.7	2.2	1.7	2.3	1.7	2.3	1.8	2.5	1.8	2.6	1.7
	91	32.5	2.0	1.6	2.1	1.7	2.2	1.7	2.2	1.7	2.3	1.8	2.4	1.7	2.6	1.7
	95	35.0	2.0	1.6	2.0	1.7	2.1	1.7	2.2	1.7	2.3	1.8	2.4	1.7	2.5	1.7
	100	37.5	1.9	1.6	2.0	1.7	2.1	1.6	2.1	1.7	2.2	1.7	2.3	1.7	2.5	1.7
	104	40.0	1.9	1.6	1.9	1.6	2.1	1.6	2.1	1.7	2.2	1.7	2.3	1.7	2.4	1.7
	110	43.0	1.8	1.6	1.9	1.6	2.0	1.6	2.0	1.6	2.1	1.7	2.2	1.7	2.4	1.7
25 (2.8)	68	20.0	2.7	2.0	2.8	2.1	2.9	2.1	3.0	2.1	3.1	2.2	3.3	2.2	3.5	2.2
	73	22.5	2.7	2.0	2.8	2.1	2.9	2.1	3.0	2.1	3.1	2.2	3.3	2.2	3.5	2.2
	77	25.0	2.7	2.0	2.8	2.1	2.9	2.1	3.0	2.1	3.1	2.2	3.3	2.2	3.5	2.1
	82	27.5	2.6	2.0	2.7	2.1	2.9	2.1	3.0	2.1	3.1	2.2	3.2	2.1	3.4	2.1
	86	30.0	2.6	2.0	2.7	2.1	2.8	2.1	2.9	2.1	3.0	2.2	3.1	2.1	3.3	2.1
	91	32.5	2.5	2.0	2.6	2.1	2.8	2.0	2.8	2.1	2.9	2.1	3.1	2.1	3.3	2.1
	95	35.0	2.5	2.0	2.6	2.0	2.7	2.0	2.8	2.0	2.9	2.1	3.0	2.1	3.2	2.1
	100	37.5	2.5	1.9	2.5	2.0	2.7	2.0	2.7	2.0	2.8	2.1	3.0	2.1	3.1	2.0
	104	40.0	2.4	1.9	2.5	2.0	2.6	2.0	2.7	2.0	2.8	2.1	2.9	2.0	3.1	2.0
	110	43.0	2.4	1.9	2.4	2.0	2.6	1.9	2.6	2.0	2.7	2.0	2.8	2.0	3.0	2.0
32 (3.6)	68	20.0	3.4	2.4	3.5	2.5	3.8	2.5	3.9	2.5	4.0	2.6	4.2	2.6	4.6	2.6
	73	22.5	3.4	2.4	3.5	2.5	3.8	2.5	3.9	2.5	4.0	2.6	4.2	2.6	4.6	2.6
	77	25.0	3.4	2.4	3.5	2.5	3.8	2.5	3.9	2.5	4.0	2.6	4.2	2.6	4.5	2.5
	82	27.5	3.4	2.4	3.5	2.5	3.7	2.5	3.8	2.5	3.9	2.6	4.1	2.5	4.4	2.5
	86	30.0	3.3	2.4	3.4	2.5	3.6	2.4	3.7	2.5	3.8	2.5	4.0	2.5	4.3	2.5
	91	32.5	3.3	2.4	3.4	2.4	3.6	2.4	3.7	2.4	3.8	2.5	4.0	2.5	4.2	2.4
	95	35.0	3.2	2.3	3.3	2.4	3.5	2.4	3.6	2.4	3.7	2.5	3.9	2.4	4.1	2.4
	100	37.5	3.2	2.3	3.2	2.4	3.4	2.3	3.5	2.4	3.6	2.4	3.8	2.4	4.0	2.4
	104	40.0	3.1	2.3	3.2	2.3	3.4	2.3	3.5	2.3	3.6	2.4	3.7	2.4	4.0	2.3
	110	43.0	3.0	2.2	3.1	2.3	3.3	2.3	3.3	2.3	3.5	2.4	3.6	2.3	3.9	2.3
40 (4.5)	68	20.0	4.3	3.0	4.4	3.1	4.7	3.0	4.9	3.1	5.0	3.2	5.3	3.1	5.7	3.1
	73	22.5	4.3	3.0	4.4	3.1	4.7	3.0	4.9	3.1	5.0	3.2	5.3	3.1	5.7	3.1
	77	25.0	4.3	3.0	4.4	3.1	4.7	3.0	4.9	3.1	5.0	3.2	5.3	3.1	5.6	3.1
	82	27.5	4.3	3.0	4.4	3.0	4.6	3.0	4.8	3.0	4.9	3.1	5.2	3.1	5.5	3.0
	86	30.0	4.2	2.9	4.3	3.0	4.6	3.0	4.7	3.0	4.8	3.1	5.0	3.0	5.4	3.0
	91	32.5	4.1	2.9	4.2	3.0	4.5	2.9	4.6	2.9	4.7	3.0	5.0	3.0	5.3	2.9
	95	35.0	4.0	2.8	4.1	2.9	4.4	2.9	4.5	2.9	4.6	3.0	4.9	2.9	5.2	2.9
	100	37.5	3.9	2.8	4.1	2.9	4.3	2.8	4.4	2.8	4.5	3.0	4.8	2.9	5.0	2.8
	104	40.0	3.9	2.8	4.0	2.8	4.2	2.8	4.3	2.8	4.5	2.9	4.7	2.9	5.0	2.8
	110	43.0	3.8	2.7	3.9	2.8	4.1	2.8	4.2	2.8	4.3	2.9	4.5	2.8	4.8	2.8

kcal/h = kW x 860, Btu/h = kW x 3,412

D2. Cooling capacity with PUHY-P300-400YHM /PUHY-EP300, 400Y(S)HM PURY-P300-400YHM /PURY-EP300, 400Y(S)HM

PMFY-P-VBM-E

CA : Capacity(kW) SHC : Sensible Heat Capacity(kW)

Model size (Rated kW)	Outdoor air temp.		Indoor air temp.													
			71 ˚FDB / 59˚FWB		73˚FDB / 61˚FWB		77˚FDB / 64˚FWB		81˚FDB / 66˚FWB		82˚FDB / 68˚FWB		86˚FDB / 72˚FWB		90˚FDB / 75˚FWB	
			21.5˚CDB / 15˚CWB		23˚CDB / 16˚CWB		25˚CDB / 18˚CWB		27˚CDB / 19˚CWB		28˚CDB / 20˚CWB		30˚CDB / 22˚CWB		32˚CDB / 24˚CWB	
	˚FDB	˚CDB	CA	SHC	CA	SHC	CA	SHC	CA	SHC	CA	SHC	CA	SHC	CA	SHC
20 (2.2)	68	20.0	2.1	1.7	2.2	1.8	2.4	1.8	2.5	1.8	2.5	1.9	2.7	1.8	2.9	1.8
	73	22.5	2.1	1.7	2.2	1.8	2.3	1.7	2.4	1.8	2.5	1.9	2.6	1.8	2.8	1.8
	77	25.0	2.1	1.7	2.2	1.7	2.3	1.7	2.4	1.8	2.4	1.8	2.6	1.8	2.8	1.8
	82	27.5	2.1	1.7	2.1	1.7	2.3	1.7	2.3	1.7	2.4	1.8	2.5	1.8	2.7	1.8
	86	30.0	2.0	1.7	2.1	1.7	2.2	1.7	2.3	1.7	2.4	1.8	2.5	1.8	2.6	1.7
	91	32.5	2.0	1.6	2.0	1.7	2.2	1.7	2.2	1.7	2.3	1.8	2.4	1.8	2.6	1.7
	95	35.0	2.0	1.6	2.0	1.7	2.1	1.6	2.2	1.7	2.3	1.8	2.4	1.7	2.5	1.7
	100	37.5	1.9	1.6	1.9	1.6	2.1	1.6	2.1	1.7	2.2	1.7	2.4	1.7	2.5	1.7
	104	40.0	1.9	1.6	1.9	1.6	2.0	1.6	2.1	1.7	2.4	1.8	2.3	1.7	2.4	1.7
	110	43.0	1.8	1.6	1.8	1.6	2.0	1.6	2.0	1.6	2.1	1.7	2.2	1.7	2.4	1.7
25 (2.8)	68	20.0	2.7	2.1	2.8	2.1	3.0	2.1	3.1	2.2	3.2	2.3	3.4	2.2	3.6	2.2
	73	22.5	2.7	2.1	2.8	2.1	3.0	2.1	3.1	2.2	3.2	2.2	3.4	2.2	3.6	2.2
	77	25.0	2.7	2.1	2.7	2.1	2.9	2.1	3.0	2.1	3.1	2.2	3.3	2.2	3.5	2.2
	82	27.5	2.6	2.0	2.7	2.1	2.9	2.1	3.0	2.1	3.1	2.2	3.2	2.2	3.4	2.1
	86	30.0	2.6	2.0	2.6	2.1	2.8	2.0	2.9	2.1	3.0	2.2	3.2	2.1	3.4	2.1
	91	32.5	2.5	2.0	2.6	2.0	2.8	2.0	2.9	2.1	2.9	2.1	3.1	2.1	3.3	2.1
	95	35.0	2.5	2.0	2.5	2.0	2.7	2.0	2.8	2.0	2.9	2.1	3.1	2.1	3.2	2.1
	100	37.5	2.5	2.0	2.5	2.0	2.6	2.0	2.7	2.0	2.8	2.1	3.0	2.1	3.2	2.0
	104	40.0	2.4	1.9	2.4	2.0	2.6	2.0	2.7	2.0	3.0	2.2	2.9	2.0	3.1	2.0
	110	43.0	2.4	1.9	2.4	1.9	2.5	1.9	2.6	2.0	2.7	2.0	2.8	2.0	3.0	2.0
32 (3.6)	68	20.0	3.5	2.5	3.6	2.5	3.9	2.5	4.0	2.6	4.2	2.7	4.4	2.6	4.7	2.6
	73	22.5	3.5	2.5	3.6	2.5	3.8	2.5	4.0	2.6	4.1	2.6	4.3	2.6	4.6	2.6
	77	25.0	3.4	2.4	3.5	2.5	3.8	2.5	3.9	2.5	4.0	2.6	4.2	2.6	4.5	2.5
	82	27.5	3.4	2.4	3.5	2.5	3.7	2.5	3.8	2.5	3.9	2.6	4.2	2.5	4.4	2.5
	86	30.0	3.3	2.4	3.4	2.4	3.6	2.4	3.7	2.5	3.9	2.5	4.1	2.5	4.3	2.5
	91	32.5	3.3	2.4	3.3	2.4	3.5	2.4	3.7	2.4	3.8	2.5	4.0	2.5	4.2	2.4
	95	35.0	3.2	2.3	3.3	2.4	3.5	2.3	3.6	2.4	3.7	2.5	3.9	2.4	4.2	2.4
	100	37.5	3.2	2.3	3.2	2.3	3.4	2.3	3.5	2.4	3.6	2.4	3.9	2.4	4.1	2.4
	104	40.0	3.1	2.3	3.1	2.3	3.3	2.3	3.4	2.3	3.9	2.6	3.8	2.4	4.0	2.3
	110	43.0	3.0	2.2	3.0	2.3	3.2	2.2	3.3	2.3	3.4	2.4	3.7	2.3	3.9	2.3
40 (4.5)	68	20.0	4.4	3.0	4.5	3.1	4.9	3.1	5.0	3.1	5.2	3.3	5.5	3.2	5.9	3.2
	73	22.5	4.3	3.0	4.5	3.1	4.8	3.1	5.0	3.1	5.1	3.2	5.4	3.2	5.7	3.1
	77	25.0	4.3	3.0	4.4	3.1	4.7	3.0	4.9	3.1	5.0	3.2	5.3	3.1	5.6	3.1
	82	27.5	4.2	2.9	4.3	3.0	4.6	3.0	4.8	3.0	4.9	3.1	5.2	3.1	5.5	3.0
	86	30.0	4.1	2.9	4.2	3.0	4.5	2.9	4.7	3.0	4.8	3.1	5.1	3.1	5.4	3.0
	91	32.5	4.1	2.9	4.2	2.9	4.4	2.9	4.6	2.9	4.7	3.0	5.0	3.0	5.3	2.9
	95	35.0	4.0	2.8	4.1	2.9	4.3	2.8	4.5	2.9	4.6	3.0	4.9	3.0	5.2	2.9
	100	37.5	4.0	2.8	4.0	2.8	4.3	2.8	4.4	2.8	4.5	3.0	4.8	2.9	5.1	2.9
	104	40.0	3.9	2.8	3.9	2.8	4.2	2.8	4.3	2.8	4.9	3.1	4.7	2.9	5.0	2.8
	110	43.0	3.8	2.7	3.8	2.7	4.1	2.7	4.2	2.8	4.3	2.9	4.6	2.8	4.8	2.8

kcal/h = kW x 860, Btu/h = kW x 3,412

CT

D3. Cooling capacity with PUHY-P450-650Y(S)HM/PUHY-EP450-650YSHM PURY-P450-650YSHM/PURY-EP450-600YSHM

PMFY-P-VBM-E

CA : Capacity(kW) SHC : Sensible Heat Capacity(kW)

Model size (Rated kW)	Outdoor air temp.		Indoor air temp.													
			71 ˚FDB / 59˚FWB		73˚FDB / 61˚FWB		77˚FDB / 64˚FWB		81˚FDB / 66˚FWB		82˚FDB / 68˚FWB		86˚FDB / 72˚FWB		90˚FDB / 75˚FWB	
			21.5˚CDB / 15˚CWB		23˚CDB / 16˚CWB		25˚CDB / 18˚CWB		27˚CDB / 19˚CWB		28˚CDB / 20˚CWB		30˚CDB / 22˚CWB		32˚CDB / 24˚CWB	
	˚FDB	˚CDB	CA	SHC	CA	SHC	CA	SHC	CA	SHC	CA	SHC	CA	SHC	CA	SHC
20 (2.2)	68	20.0	2.1	1.7	2.1	1.7	2.3	1.7	2.4	1.8	2.5	1.8	2.6	1.8	2.8	1.8
	73	22.5	2.1	1.7	2.1	1.7	2.3	1.7	2.3	1.7	2.4	1.8	2.6	1.8	2.7	1.8
	77	25.0	2.0	1.7	2.1	1.7	2.2	1.7	2.3	1.7	2.4	1.8	2.6	1.8	2.7	1.8
	82	27.5	2.0	1.7	2.1	1.7	2.2	1.7	2.3	1.7	2.4	1.8	2.5	1.8	2.6	1.7
	86	30.0	2.0	1.6	2.0	1.7	2.2	1.7	2.3	1.7	2.4	1.8	2.5	1.8	2.7	1.8
	91	32.5	2.0	1.6	2.0	1.7	2.2	1.7	2.2	1.7	2.3	1.8	2.5	1.8	2.6	1.7
	95	35.0	2.0	1.6	2.0	1.7	2.1	1.7	2.2	1.7	2.3	1.8	2.5	1.8	2.6	1.7
	100	37.5	1.9	1.6	2.0	1.7	2.1	1.6	2.2	1.7	2.3	1.8	2.4	1.8	2.6	1.7
	104	40.0	1.9	1.6	1.9	1.6	2.1	1.6	2.1	1.7	2.2	1.8	2.4	1.7	2.6	1.7
	110	43.0	1.9	1.6	1.9	1.6	2.1	1.6	2.1	1.7	2.2	1.7	2.4	1.7	2.6	1.7
25 (2.8)	68	20.0	2.6	2.0	2.7	2.1	2.9	2.1	3.0	2.1	3.1	2.2	3.3	2.2	3.5	2.2
	73	22.5	2.6	2.0	2.7	2.1	2.9	2.1	3.0	2.1	3.1	2.2	3.3	2.2	3.5	2.1
	77	25.0	2.6	2.0	2.7	2.1	2.9	2.1	2.9	2.1	3.1	2.2	3.2	2.2	3.5	2.1
	82	27.5	2.6	2.0	2.6	2.1	2.8	2.1	2.9	2.1	3.0	2.2	3.2	2.2	3.4	2.1
	86	30.0	2.5	2.0	2.6	2.0	2.8	2.0	2.9	2.1	3.0	2.2	3.2	2.1	3.4	2.1
	91	32.5	2.5	2.0	2.6	2.0	2.7	2.0	2.8	2.1	3.0	2.2	3.2	2.1	3.4	2.1
	95	35.0	2.5	2.0	2.5	2.0	2.7	2.0	2.8	2.0	2.9	2.1	3.1	2.1	3.3	2.1
	100	37.5	2.5	2.0	2.5	2.0	2.7	2.0	2.8	2.0	2.9	2.1	3.1	2.1	3.3	2.1
	104	40.0	2.4	1.9	2.5	2.0	2.7	2.0	2.7	2.0	2.9	2.1	3.1	2.1	3.3	2.1
	110	43.0	2.4	1.9	2.5	2.0	2.6	2.0	2.7	2.0	2.8	2.1	3.0	2.1	3.2	2.1
32 (3.6)	68	20.0	3.4	2.4	3.5	2.5	3.7	2.5	3.9	2.5	4.0	2.6	4.2	2.6	4.5	2.5
	73	22.5	3.4	2.4	3.5	2.5	3.7	2.5	3.8	2.5	4.0	2.6	4.2	2.6	4.5	2.5
	77	25.0	3.3	2.4	3.4	2.5	3.7	2.4	3.8	2.5	3.9	2.6	4.2	2.5	4.4	2.5
	82	27.5	3.3	2.4	3.4	2.4	3.6	2.4	3.7	2.5	3.9	2.6	4.1	2.5	4.3	2.5
	86	30.0	3.3	2.4	3.3	2.4	3.6	2.4	3.7	2.4	3.9	2.5	4.1	2.5	4.4	2.5
	91	32.5	3.2	2.3	3.3	2.4	3.5	2.4	3.6	2.4	3.8	2.5	4.1	2.5	4.3	2.5
	95	35.0	3.2	2.3	3.3	2.4	3.5	2.4	3.6	2.4	3.7	2.5	4.0	2.5	4.3	2.5
	100	37.5	3.2	2.3	3.2	2.4	3.5	2.3	3.5	2.4	3.7	2.5	4.0	2.5	4.2	2.4
	104	40.0	3.1	2.3	3.2	2.3	3.4	2.3	3.5	2.3	3.7	2.5	4.0	2.5	4.2	2.4
	110	43.0	3.1	2.3	3.2	2.3	3.4	2.3	3.5	2.3	3.6	2.4	3.9	2.4	4.2	2.4
40 (4.5)	68	20.0	4.3	3.0	4.4	3.0	4.7	3.0	4.8	3.0	5.0	3.2	5.3	3.1	5.7	3.1
	73	22.5	4.2	3.0	4.3	3.0	4.6	3.0	4.8	3.0	5.0	3.1	5.3	3.1	5.6	3.1
	77	25.0	4.2	2.9	4.3	3.0	4.6	3.0	4.7	3.0	4.9	3.1	5.2	3.1	5.6	3.0
	82	27.5	4.1	2.9	4.2	3.0	4.5	3.0	4.7	3.0	4.9	3.1	5.2	3.1	5.4	3.0
	86	30.0	4.1	2.9	4.2	2.9	4.5	2.9	4.6	3.0	4.8	3.1	5.1	3.1	5.4	3.0
	91	32.5	4.1	2.9	4.1	2.9	4.4	2.9	4.5	2.9	4.8	3.1	5.1	3.0	5.4	3.0
	95	35.0	4.0	2.8	4.1	2.9	4.4	2.9	4.5	2.9	4.7	3.0	5.0	3.0	5.4	3.0
	100	37.5	4.0	2.8	4.0	2.9	4.3	2.8	4.4	2.9	4.7	3.0	5.0	3.0	5.3	3.0
	104	40.0	3.9	2.8	4.0	2.8	4.3	2.8	4.4	2.8	4.6	3.0	5.0	3.0	5.3	2.9
	110	43.0	3.9	2.8	3.9	2.8	4.2	2.8	4.3	2.8	4.5	3.0	4.9	2.9	5.2	2.9

kcal/h = kW x 860, Btu/h = kW x 3,412

D4. Cooling capacity with PUHY-P700-800YSHM/PUHY-EP700-800YSHM PURY-P700-800YSHM

PMFY-P-VBM-E

CA : Capacity(kW) SHC : Sensible Heat Capacity(kW)

Model size (Rated kW)	Outdoor air temp.		Indoor air temp.													
			71 ˚FDB / 59˚FWB		73˚FDB / 61˚FWB		77˚FDB / 64˚FWB		81˚FDB / 66˚FWB		82˚FDB / 68˚FWB		86˚FDB / 72˚FWB		90˚FDB / 75˚FWB	
			21.5˚CDB / 15˚CWB		23˚CDB / 16˚CWB		25˚CDB / 18˚CWB		27˚CDB / 19˚CWB		28˚CDB / 20˚CWB		30˚CDB / 22˚CWB		32˚CDB / 24˚CWB	
	˚FDB	˚CDB	CA	SHC	CA	SHC	CA	SHC	CA	SHC	CA	SHC	CA	SHC	CA	SHC
20 (2.2)	68	20.0	2.1	1.7	2.2	1.8	2.4	1.8	2.4	1.8	2.5	1.9	2.7	1.9	2.9	1.8
	73	22.5	2.1	1.7	2.2	1.7	2.3	1.7	2.4	1.8	2.5	1.8	2.7	1.8	2.8	1.8
	77	25.0	2.1	1.7	2.1	1.7	2.3	1.7	2.4	1.8	2.4	1.8	2.6	1.8	2.8	1.8
	82	27.5	2.0	1.7	2.1	1.7	2.2	1.7	2.3	1.7	2.4	1.8	2.6	1.8	2.7	1.8
	86	30.0	2.0	1.6	2.1	1.7	2.2	1.7	2.3	1.7	2.4	1.8	2.5	1.8	2.7	1.8
	91	32.5	1.9	1.6	2.0	1.7	2.2	1.7	2.2	1.7	2.3	1.8	2.5	1.8	2.6	1.7
	95	35.0	1.9	1.6	2.0	1.7	2.1	1.6	2.2	1.7	2.3	1.8	2.4	1.7	2.6	1.7
	100	37.5	1.9	1.6	2.0	1.7	2.1	1.6	2.2	1.7	2.2	1.8	2.4	1.7	2.5	1.7
	104	40.0	1.8	1.6	1.9	1.6	2.0	1.6	2.1	1.7	2.2	1.7	2.3	1.7	2.5	1.7
	110	43.0	1.8	1.6	1.8	1.6	2.0	1.6	2.1	1.6	2.1	1.7	2.3	1.7	2.4	1.7
25 (2.8)	68	20.0	2.7	2.1	2.8	2.1	3.0	2.1	3.1	2.2	3.2	2.3	3.4	2.2	3.7	2.2
	73	22.5	2.7	2.0	2.8	2.1	3.0	2.1	3.1	2.1	3.2	2.2	3.4	2.2	3.6	2.2
	77	25.0	2.6	2.0	2.7	2.1	2.9	2.1	3.0	2.1	3.1	2.2	3.3	2.2	3.5	2.2
	82	27.5	2.6	2.0	2.7	2.1	2.9	2.1	3.0	2.1	3.1	2.2	3.3	2.2	3.5	2.1
	86	30.0	2.5	2.0	2.6	2.1	2.8	2.0	2.9	2.1	3.0	2.2	3.2	2.1	3.4	2.1
	91	32.5	2.5	2.0	2.6	2.0	2.7	2.0	2.8	2.1	2.9	2.1	3.1	2.1	3.3	2.1
	95	35.0	2.4	1.9	2.5	2.0	2.7	2.0	2.8	2.0	2.9	2.1	3.1	2.1	3.3	2.1
	100	37.5	2.4	1.9	2.5	2.0	2.6	2.0	2.7	2.0	2.8	2.1	3.0	2.1	3.2	2.1
	104	40.0	2.4	1.9	2.4	2.0	2.6	2.0	2.7	2.0	2.8	2.1	3.0	2.1	3.2	2.0
	110	43.0	2.3	1.9	2.4	1.9	2.5	1.9	2.6	2.0	2.7	2.1	2.9	2.0	3.1	2.0
32 (3.6)	68	20.0	3.5	2.5	3.6	2.5	3.9	2.5	4.0	2.6	4.1	2.7	4.4	2.6	4.7	2.6
	73	22.5	3.4	2.4	3.5	2.5	3.8	2.5	3.9	2.5	4.1	2.6	4.4	2.6	4.6	2.6
	77	25.0	3.4	2.4	3.5	2.5	3.7	2.5	3.9	2.5	4.0	2.6	4.2	2.6	4.5	2.5
	82	27.5	3.3	2.4	3.4	2.4	3.7	2.4	3.8	2.5	3.9	2.6	4.2	2.6	4.5	2.5
	86	30.0	3.2	2.3	3.4	2.4	3.6	2.4	3.7	2.4	3.9	2.5	4.1	2.5	4.4	2.5
	91	32.5	3.2	2.3	3.3	2.4	3.5	2.4	3.7	2.4	3.8	2.5	4.0	2.5	4.3	2.5
	95	35.0	3.1	2.3	3.2	2.4	3.5	2.3	3.6	2.4	3.7	2.5	4.0	2.5	4.2	2.4
	100	37.5	3.1	2.3	3.2	2.3	3.4	2.3	3.5	2.4	3.7	2.5	3.9	2.4	4.1	2.4
	104	40.0	3.0	2.2	3.1	2.3	3.3	2.3	3.5	2.3	3.6	2.4	3.8	2.4	4.1	2.4
	110	43.0	3.0	2.2	3.0	2.3	3.2	2.2	3.4	2.3	3.5	2.4	3.7	2.4	4.0	2.3
40 (4.5)	68	20.0	4.3	3.0	4.5	3.1	4.8	3.1	5.0	3.1	5.2	3.2	5.5	3.2	5.9	3.2
	73	22.5	4.3	3.0	4.4	3.1	4.7	3.1	4.9	3.1	5.1	3.2	5.4	3.2	5.8	3.1
	77	25.0	4.2	3.0	4.4	3.0	4.7	3.0	4.8	3.1	5.0	3.2	5.3	3.1	5.7	3.1
	82	27.5	4.1	2.9	4.3	3.0	4.6	3.0	4.7	3.0	4.9	3.1	5.2	3.1	5.6	3.1
	86	30.0	4.1	2.9	4.2	2.9	4.5	2.9	4.7	3.0	4.8	3.1	5.1	3.1	5.5	3.0
	91	32.5	4.0	2.8	4.1	2.9	4.4	2.9	4.6	2.9	4.7	3.0	5.0	3.0	5.4	3.0
	95	35.0	3.9	2.8	4.1	2.9	4.3	2.8	4.5	2.9	4.6	3.0	5.0	3.0	5.3	2.9
	100	37.5	3.8	2.8	4.0	2.8	4.3	2.8	4.4	2.9	4.6	3.0	4.9	2.9	5.2	2.9
	104	40.0	3.8	2.7	3.9	2.8	4.2	2.8	4.3	2.8	4.5	2.9	4.8	2.9	5.1	2.9
	110	43.0	3.7	2.7	3.8	2.7	4.1	2.7	4.2	2.8	4.4	2.9	4.7	2.9	5.0	2.8

kcal/h = kW x 860, Btu/h = kW x 3,412

CT

D5. Cooling capacity with PUHY-P850-1250YSHM/PUHY-EP850-900YSHM

PMFY-P-VBM-E

CA : Capacity(kW) SHC : Sensible Heat Capacity(kW)

Model size (Rated kW)	Outdoor air temp.		Indoor air temp.													
			71 ˚FDB / 59˚FWB		73˚FDB / 61˚FWB		77˚FDB / 64˚FWB		81˚FDB / 66˚FWB		82˚FDB / 68˚FWB		86˚FDB / 72˚FWB		90˚FDB / 75˚FWB	
			21.5˚CDB / 15˚CWB		23˚CDB / 16˚CWB		25˚CDB / 18˚CWB		27˚CDB / 19˚CWB		28˚CDB / 20˚CWB		30˚CDB / 22˚CWB		32˚CDB / 24˚CWB	
	˚FDB	˚CDB	CA	SHC	CA	SHC	CA	SHC	CA	SHC	CA	SHC	CA	SHC	CA	SHC
20 (2.2)	68	20.0	2.1	1.8	2.1	1.9	2.3	1.9	2.4	2.0	2.4	2.0	2.6	2.0	2.8	1.9
	73	22.5	2.1	1.8	2.1	1.9	2.3	1.8	2.3	2.0	2.4	2.0	2.6	2.0	2.7	1.9
	77	25.0	2.0	1.8	2.1	1.8	2.2	1.8	2.3	2.0	2.4	2.0	2.6	2.0	2.7	1.9
	82	27.5	2.0	1.8	2.1	1.8	2.2	1.8	2.3	2.0	2.4	2.0	2.5	1.9	2.7	1.9
	86	30.0	2.0	1.8	2.0	1.8	2.2	1.8	2.3	2.0	2.3	1.9	2.5	1.9	2.7	1.9
	91	32.5	2.0	1.8	2.0	1.8	2.2	1.8	2.2	1.9	2.3	1.9	2.5	1.9	2.6	1.9
	95	35.0	1.9	1.7	2.0	1.8	2.1	1.8	2.2	1.9	2.3	1.9	2.5	1.9	2.6	1.9
	100	37.5	1.9	1.7	2.0	1.8	2.1	1.8	2.2	1.9	2.3	1.9	2.4	1.9	2.6	1.9
	104	40.0	1.9	1.7	1.9	1.8	2.1	1.8	2.2	1.9	2.2	1.9	2.4	1.9	2.6	1.9
	110	43.0	1.9	1.7	1.9	1.8	2.1	1.8	2.1	1.9	2.2	1.9	2.4	1.9	2.5	1.9
25 (2.8)	68	20.0	2.6	2.2	2.7	2.3	2.9	2.3	3.0	2.4	3.1	2.4	3.3	2.4	3.5	2.4
	73	22.5	2.6	2.2	2.7	2.3	2.9	2.3	3.0	2.4	3.1	2.4	3.3	2.4	3.5	2.4
	77	25.0	2.6	2.2	2.7	2.3	2.9	2.3	2.9	2.4	3.0	2.4	3.2	2.4	3.4	2.4
	82	27.5	2.6	2.2	2.6	2.2	2.8	2.2	2.9	2.4	3.0	2.4	3.2	2.4	3.4	2.3
	86	30.0	2.5	2.2	2.6	2.2	2.8	2.2	2.9	2.4	3.0	2.4	3.2	2.4	3.4	2.3
	91	32.5	2.5	2.2	2.6	2.2	2.7	2.2	2.8	2.4	2.9	2.4	3.2	2.4	3.4	2.3
	95	35.0	2.5	2.1	2.5	2.2	2.7	2.2	2.8	2.4	2.9	2.4	3.1	2.3	3.3	2.3
	100	37.5	2.5	2.1	2.5	2.2	2.7	2.2	2.8	2.3	2.9	2.3	3.1	2.3	3.3	2.3
	104	40.0	2.4	2.1	2.5	2.2	2.6	2.2	2.7	2.3	2.9	2.3	3.1	2.3	3.3	2.3
	110	43.0	2.4	2.1	2.4	2.2	2.6	2.2	2.7	2.3	2.8	2.3	3.0	2.3	3.2	2.3
32 (3.6)	68	20.0	3.4	2.6	3.5	2.6	3.7	2.6	3.9	2.8	4.0	2.8	4.2	2.7	4.5	2.7
	73	22.5	3.4	2.5	3.5	2.6	3.7	2.6	3.8	2.8	4.0	2.7	4.2	2.7	4.5	2.7
	77	25.0	3.3	2.5	3.4	2.6	3.7	2.6	3.8	2.7	3.9	2.7	4.2	2.7	4.4	2.7
	82	27.5	3.3	2.5	3.4	2.6	3.6	2.6	3.7	2.7	3.9	2.7	4.1	2.7	4.4	2.6
	86	30.0	3.3	2.5	3.3	2.5	3.6	2.5	3.7	2.7	3.8	2.7	4.1	2.7	4.3	2.6
	91	32.5	3.2	2.5	3.3	2.5	3.5	2.5	3.7	2.7	3.8	2.7	4.1	2.7	4.3	2.6
	95	35.0	3.2	2.5	3.3	2.5	3.5	2.5	3.6	2.7	3.8	2.7	4.0	2.6	4.3	2.6
	100	37.5	3.2	2.4	3.2	2.5	3.4	2.5	3.6	2.6	3.7	2.6	4.0	2.6	4.2	2.6
	104	40.0	3.1	2.4	3.2	2.5	3.4	2.5	3.5	2.6	3.7	2.6	3.9	2.6	4.2	2.6
	110	43.0	3.1	2.4	3.1	2.5	3.4	2.4	3.5	2.6	3.6	2.6	3.9	2.6	4.2	2.6
40 (4.5)	68	20.0	4.3	3.1	4.4	3.2	4.7	3.2	4.8	3.4	5.0	3.4	5.3	3.3	5.6	3.3
	73	22.5	4.2	3.1	4.3	3.2	4.6	3.2	4.8	3.4	4.9	3.4	5.3	3.3	5.6	3.3
	77	25.0	4.2	3.1	4.3	3.2	4.6	3.2	4.7	3.3	4.9	3.3	5.2	3.3	5.5	3.3
	82	27.5	4.1	3.1	4.2	3.1	4.5	3.1	4.7	3.3	4.8	3.3	5.2	3.3	5.5	3.2
	86	30.0	4.1	3.0	4.2	3.1	4.5	3.1	4.6	3.3	4.8	3.3	5.1	3.3	5.4	3.2
	91	32.5	4.0	3.0	4.1	3.1	4.4	3.1	4.6	3.3	4.7	3.3	5.1	3.2	5.4	3.2
	95	35.0	4.0	3.0	4.1	3.1	4.4	3.1	4.5	3.3	4.7	3.2	5.0	3.2	5.3	3.2
	100	37.5	3.9	3.0	4.0	3.0	4.3	3.0	4.5	3.2	4.6	3.2	5.0	3.2	5.3	3.2
	104	40.0	3.9	3.0	4.0	3.0	4.3	3.0	4.4	3.2	4.6	3.2	4.9	3.2	5.2	3.1
	110	43.0	3.8	2.9	3.9	3.0	4.2	3.0	4.4	3.2	4.5	3.2	4.9	3.2	5.2	3.1

kcal/h = kW x 860, Btu/h = kW x 3,412

D6. Cooling capacity with PUHY-HP200-500Y(S)HM

PMFY-P-VBM-E

CA : Capacity(kW) SHC : Sensible Heat Capacity(kW)

Model size (Rated kW)	Outdoor air temp.		Indoor air temp.													
			71 ˚FDB / 59˚FWB		73˚FDB / 61˚FWB		77˚FDB / 64˚FWB		81˚FDB / 66˚FWB		82˚FDB / 68˚FWB		86˚FDB / 72˚FWB		90˚FDB / 75˚FWB	
			21.5˚CDB / 15˚CWB		23˚CDB / 16˚CWB		25˚CDB / 18˚CWB		27˚CDB / 19˚CWB		28˚CDB / 20˚CWB		30˚CDB / 22˚CWB		32˚CDB / 24˚CWB	
	˚FDB	˚CDB	CA	SHC	CA	SHC	CA	SHC	CA	SHC	CA	SHC	CA	SHC	CA	SHC
20 (2.2)	68	20.0	1.9	1.7	2.1	1.8	2.2	1.8	2.4	2.0	2.4	2.0	2.6	2.0	2.7	1.9
	73	22.5	1.9	1.7	2.1	1.8	2.2	1.8	2.4	2.0	2.4	2.0	2.6	2.0	2.7	1.9
	77	25.0	1.9	1.7	2.1	1.8	2.2	1.8	2.4	2.0	2.4	2.0	2.6	2.0	2.7	1.9
	82	27.5	1.9	1.7	2.1	1.8	2.2	1.8	2.3	2.0	2.4	2.0	2.5	1.9	2.6	1.9
	86	30.0	1.9	1.7	2.0	1.8	2.2	1.8	2.3	2.0	2.4	2.0	2.5	1.9	2.6	1.9
	91	32.5	1.9	1.7	2.0	1.8	2.1	1.8	2.2	1.9	2.3	1.9	2.4	1.9	2.5	1.9
	95	35.0	1.9	1.7	2.0	1.8	2.1	1.8	2.2	1.9	2.3	1.9	2.4	1.9	2.5	1.9
	100	37.5	1.9	1.7	2.0	1.8	2.1	1.8	2.2	1.9	2.2	1.9	2.3	1.9	2.4	1.8
	104	40.0	1.9	1.7	1.9	1.8	2.0	1.8	2.1	1.9	2.2	1.9	2.3	1.9	2.4	1.8
	110	43.0	1.9	1.7	1.9	1.8	2.0	1.7	2.1	1.9	2.1	1.9	2.2	1.8	2.3	1.8
25 (2.8)	68	20.0	2.5	2.1	2.7	2.3	2.8	2.2	3.0	2.4	3.1	2.4	3.3	2.4	3.5	2.4
	73	22.5	2.5	2.1	2.7	2.3	2.8	2.2	3.0	2.4	3.1	2.4	3.3	2.4	3.5	2.4
	77	25.0	2.5	2.1	2.7	2.3	2.8	2.2	3.0	2.4	3.1	2.4	3.3	2.4	3.4	2.3
	82	27.5	2.5	2.1	2.6	2.3	2.8	2.2	2.9	2.4	3.0	2.4	3.2	2.4	3.4	2.3
	86	30.0	2.4	2.1	2.6	2.2	2.8	2.2	2.9	2.4	3.0	2.4	3.1	2.3	3.3	2.3
	91	32.5	2.4	2.1	2.6	2.2	2.7	2.2	2.8	2.4	2.9	2.4	3.1	2.3	3.2	2.3
	95	35.0	2.4	2.1	2.5	2.2	2.7	2.2	2.8	2.4	2.9	2.3	3.0	2.3	3.2	2.3
	100	37.5	2.4	2.1	2.5	2.2	2.6	2.2	2.8	2.3	2.8	2.3	3.0	2.3	3.1	2.2
	104	40.0	2.4	2.1	2.5	2.2	2.6	2.2	2.7	2.3	2.8	2.3	2.9	2.3	3.0	2.2
	110	43.0	2.4	2.1	2.4	2.2	2.6	2.1	2.7	2.3	2.7	2.3	2.8	2.2	2.9	2.2
32 (3.6)	68	20.0	3.2	2.4	3.4	2.6	3.6	2.6	3.9	2.8	4.0	2.8	4.2	2.7	4.5	2.7
	73	22.5	3.2	2.4	3.4	2.6	3.6	2.6	3.9	2.8	4.0	2.8	4.2	2.7	4.5	2.7
	77	25.0	3.2	2.4	3.4	2.6	3.6	2.6	3.8	2.8	4.0	2.8	4.2	2.7	4.4	2.7
	82	27.5	3.2	2.4	3.4	2.6	3.6	2.5	3.8	2.7	3.9	2.7	4.1	2.7	4.3	2.6
	86	30.0	3.1	2.4	3.3	2.6	3.5	2.5	3.7	2.7	3.8	2.7	4.0	2.7	4.2	2.6
	91	32.5	3.1	2.4	3.3	2.5	3.5	2.5	3.7	2.7	3.8	2.7	4.0	2.6	4.1	2.6
	95	35.0	3.1	2.4	3.3	2.5	3.4	2.5	3.6	2.7	3.7	2.6	3.9	2.6	4.1	2.5
	100	37.5	3.1	2.4	3.2	2.5	3.4	2.5	3.5	2.6	3.6	2.6	3.8	2.6	4.0	2.5
	104	40.0	3.1	2.4	3.2	2.5	3.3	2.4	3.5	2.6	3.6	2.6	3.7	2.5	3.9	2.5
	110	43.0	3.0	2.4	3.1	2.5	3.3	2.4	3.4	2.6	3.5	2.6	3.6	2.5	3.8	2.4
40 (4.5)	68	20.0	4.0	3.0	4.3	3.2	4.5	3.1	4.8	3.4	5.0	3.4	5.3	3.3	5.6	3.3
	73	22.5	4.0	3.0	4.3	3.2	4.5	3.1	4.8	3.4	5.0	3.4	5.3	3.3	5.6	3.3
	77	25.0	4.0	3.0	4.3	3.2	4.5	3.1	4.8	3.4	5.0	3.4	5.3	3.3	5.5	3.2
	82	27.5	4.0	3.0	4.2	3.1	4.5	3.1	4.7	3.3	4.9	3.3	5.1	3.3	5.4	3.2
	86	30.0	3.9	3.0	4.2	3.1	4.4	3.1	4.7	3.3	4.8	3.3	5.1	3.2	5.3	3.2
	91	32.5	3.9	3.0	4.1	3.1	4.4	3.1	4.6	3.3	4.7	3.3	5.0	3.2	5.2	3.1
	95	35.0	3.9	3.0	4.1	3.1	4.3	3.0	4.5	3.2	4.6	3.2	4.9	3.2	5.1	3.1
	100	37.5	3.9	2.9	4.0	3.1	4.2	3.0	4.4	3.2	4.5	3.2	4.8	3.1	5.0	3.0
	104	40.0	3.8	2.9	4.0	3.0	4.2	3.0	4.4	3.2	4.5	3.2	4.7	3.1	4.9	3.0
	110	43.0	3.8	2.9	3.9	3.0	4.1	2.9	4.3	3.1	4.4	3.1	4.5	3.0	4.7	3.0

kcal/h = kW x 860, Btu/h = kW x 3,412

CT

D7. Cooling capacity with PQHY-P200-900Y(S)HM PQRY-P200-600Y(S)HM

PMFY-P-VBM-E

CA : Capacity(kW) SHC : Sensible Heat Capacity(kW)

Model size (Rated kW)	Water temp.		Indoor air temp.													
			71 ˚FDB / 59˚FWB		73˚FDB / 61˚FWB		77˚FDB / 64˚FWB		81˚FDB / 66˚FWB		82˚FDB / 68˚FWB		86˚FDB / 72˚FWB		90˚FDB / 75˚FWB	
			21.5˚CDB / 15˚CWB		23˚CDB / 16˚CWB		25˚CDB / 18˚CWB		27˚CDB / 19˚CWB		28˚CDB / 20˚CWB		30˚CDB / 22˚CWB		32˚CDB / 24˚CWB	
	˚F	˚C	CA	SHC	CA	SHC	CA	SHC	CA	SHC	CA	SHC	CA	SHC	CA	SHC
20 (2.2)	50	10.0	2.0	1.8	2.0	1.8	2.1	1.8	2.2	1.9	2.2	1.9	2.2	1.8	2.2	1.8
	68	20.0	2.0	1.8	2.0	1.8	2.1	1.8	2.2	1.9	2.2	1.9	2.2	1.8	2.2	1.8
	86	30.0	2.0	1.8	2.0	1.8	2.1	1.8	2.2	1.9	2.2	1.9	2.2	1.8	2.2	1.8
	104	40.0	1.8	1.7	1.8	1.7	1.9	1.7	2.0	1.8	2.0	1.8	2.0	1.7	2.0	1.7
	113	45.0	1.7	1.6	1.7	1.7	1.8	1.7	1.8	1.8	1.8	1.8	1.8	1.7	1.8	1.7
25 (2.8)	50	10.0	2.5	2.2	2.6	2.2	2.7	2.2	2.8	2.4	2.8	2.3	2.8	2.2	2.8	2.1
	68	20.0	2.5	2.2	2.6	2.2	2.7	2.2	2.8	2.4	2.8	2.3	2.8	2.2	2.8	2.1
	86	30.0	2.5	2.2	2.6	2.2	2.7	2.2	2.8	2.4	2.8	2.3	2.8	2.2	2.8	2.1
	104	40.0	2.2	2.0	2.3	2.1	2.4	2.1	2.5	2.2	2.5	2.2	2.5	2.1	2.5	2.0
	113	45.0	2.1	2.0	2.2	2.0	2.3	2.0	2.3	2.2	2.3	2.1	2.3	2.1	2.3	2.0
32 (3.6)	50	10.0	3.2	2.5	3.3	2.5	3.5	2.5	3.6	2.7	3.6	2.6	3.6	2.5	3.6	2.4
	68	20.0	3.2	2.5	3.3	2.5	3.5	2.5	3.6	2.7	3.6	2.6	3.6	2.5	3.6	2.4
	86	30.0	3.2	2.5	3.3	2.5	3.5	2.5	3.6	2.7	3.6	2.6	3.6	2.5	3.6	2.4
	104	40.0	2.9	2.3	3.0	2.4	3.1	2.3	3.2	2.5	3.2	2.4	3.2	2.3	3.2	2.2
	113	45.0	2.7	2.2	2.8	2.3	2.9	2.3	3.0	2.4	3.0	2.4	3.0	2.3	3.0	2.2
40 (4.5)	50	10.0	4.1	3.0	4.2	3.1	4.4	3.1	4.5	3.2	4.5	3.2	4.5	3.0	4.5	2.9
	68	20.0	4.1	3.0	4.2	3.1	4.4	3.1	4.5	3.2	4.5	3.2	4.5	3.0	4.5	2.9
	86	30.0	4.1	3.0	4.2	3.1	4.4	3.1	4.5	3.2	4.5	3.2	4.5	3.0	4.5	2.9
	104	40.0	3.6	2.8	3.7	2.9	3.9	2.9	4.0	3.0	4.0	3.0	4.0	2.8	4.0	2.7
	113	45.0	3.4	2.7	3.5	2.8	3.7	2.8	3.8	2.9	3.8	2.9	3.8	2.7	3.8	2.6

kcal/h = kW x 860, Btu/h = kW x 3,412

D8. Cooling capacity with PUMY-P100,125,140YHMB,VHMB

PMFY-P-VBM-E

CA : Capacity(kW) SHC : Sensible Heat Capacity(kW)

Model size (Rated kW)	Outdoor air temp.		Indoor air temp.													
			71 ˚FDB / 59˚FWB		73˚FDB / 61˚FWB		77˚FDB / 64˚FWB		81˚FDB / 66˚FWB		82˚FDB / 68˚FWB		86˚FDB / 72˚FWB		90˚FDB / 75˚FWB	
			21.5˚CDB / 15˚CWB		23˚CDB / 16˚CWB		25˚CDB / 18˚CWB		27˚CDB / 19˚CWB		28˚CDB / 20˚CWB		30˚CDB / 22˚CWB		32˚CDB / 24˚CWB	
	˚FDB	˚CDB	CA	SHC	CA	SHC	CA	SHC	CA	SHC	CA	SHC	CA	SHC	CA	SHC
20 (2.2)	68	20.0	2.1	1.8	2.2	1.9	2.3	1.9	2.4	2.0	2.4	2.0	2.6	2.0	2.7	1.9
	73	22.5	2.0	1.8	2.1	1.9	2.3	1.9	2.3	2.0	2.4	2.0	2.6	2.0	2.7	1.9
	77	25.0	2.0	1.8	2.1	1.9	2.2	1.8	2.3	2.0	2.4	2.0	2.5	1.9	2.6	1.9
	82	27.5	2.0	1.8	2.1	1.9	2.2	1.8	2.3	2.0	2.4	2.0	2.5	1.9	2.6	1.9
	86	30.0	2.0	1.8	2.1	1.8	2.2	1.8	2.3	2.0	2.3	1.9	2.5	1.9	2.6	1.9
	91	32.5	1.9	1.7	2.0	1.8	2.2	1.8	2.2	1.9	2.3	1.9	2.4	1.9	2.6	1.9
	95	35.0	1.9	1.7	2.0	1.8	2.1	1.8	2.2	1.9	2.3	1.9	2.4	1.9	2.5	1.9
	100	37.5	1.9	1.7	2.0	1.8	2.1	1.8	2.2	1.9	2.2	1.9	2.4	1.9	2.5	1.9
	104	40.0	1.8	1.7	1.9	1.8	2.1	1.8	2.1	1.9	2.2	1.9	2.4	1.9	2.5	1.9
	110	43.0	1.8	1.7	1.9	1.8	2.1	1.8	2.1	1.9	2.2	1.9	2.3	1.9	2.4	1.8
25 (2.8)	68	20.0	2.6	2.2	2.8	2.3	2.9	2.3	3.0	2.4	3.1	2.4	3.3	2.4	3.4	2.3
	73	22.5	2.6	2.2	2.7	2.3	2.9	2.3	3.0	2.4	3.1	2.4	3.2	2.4	3.4	2.3
	77	25.0	2.6	2.2	2.7	2.3	2.9	2.3	2.9	2.4	3.0	2.4	3.2	2.4	3.4	2.3
	82	27.5	2.5	2.2	2.7	2.3	2.8	2.2	2.9	2.4	3.0	2.4	3.2	2.4	3.3	2.3
	86	30.0	2.5	2.2	2.6	2.3	2.8	2.2	2.9	2.4	3.0	2.4	3.2	2.3	3.3	2.3
	91	32.5	2.5	2.1	2.6	2.2	2.8	2.2	2.8	2.4	2.9	2.4	3.1	2.3	3.3	2.3
	95	35.0	2.4	2.1	2.6	2.2	2.7	2.2	2.8	2.4	2.9	2.3	3.1	2.3	3.2	2.3
	100	37.5	2.4	2.1	2.5	2.2	2.7	2.2	2.8	2.3	2.8	2.3	3.0	2.3	3.2	2.3
	104	40.0	2.3	2.1	2.5	2.2	2.7	2.2	2.7	2.3	2.8	2.3	3.0	2.3	3.2	2.3
	110	43.0	2.3	2.1	2.4	2.2	2.6	2.2	2.7	2.3	2.7	2.3	3.0	2.3	3.1	2.2
32 (3.6)	68	20.0	3.4	2.5	3.6	2.7	3.7	2.6	3.9	2.8	4.0	2.8	4.2	2.7	4.4	2.7
	73	22.5	3.3	2.5	3.5	2.6	3.7	2.6	3.8	2.8	4.0	2.7	4.2	2.7	4.4	2.6
	77	25.0	3.3	2.5	3.5	2.6	3.7	2.6	3.8	2.7	3.9	2.7	4.1	2.7	4.3	2.6
	82	27.5	3.3	2.5	3.4	2.6	3.6	2.6	3.7	2.7	3.9	2.7	4.1	2.7	4.3	2.6
	86	30.0	3.2	2.5	3.4	2.6	3.6	2.5	3.7	2.7	3.8	2.7	4.1	2.7	4.2	2.6
	91	32.5	3.2	2.4	3.3	2.6	3.6	2.5	3.7	2.7	3.8	2.7	4.0	2.6	4.2	2.6
	95	35.0	3.1	2.4	3.3	2.5	3.5	2.5	3.6	2.7	3.7	2.6	4.0	2.6	4.2	2.6
	100	37.5	3.1	2.4	3.2	2.5	3.5	2.5	3.6	2.6	3.7	2.6	3.9	2.6	4.1	2.5
	104	40.0	3.0	2.4	3.2	2.5	3.4	2.5	3.5	2.6	3.6	2.6	3.9	2.6	4.1	2.5
	110	43.0	2.9	2.3	3.1	2.4	3.4	2.4	3.4	2.6	3.5	2.6	3.8	2.6	4.0	2.5
40 (4.5)	68	20.0	4.2	3.1	4.4	3.3	4.7	3.2	4.8	3.4	5.0	3.4	5.3	3.3	5.5	3.2
	73	22.5	4.2	3.1	4.4	3.2	4.6	3.2	4.8	3.4	4.9	3.4	5.2	3.3	5.5	3.2
	77	25.0	4.1	3.1	4.3	3.2	4.6	3.2	4.7	3.3	4.9	3.3	5.2	3.3	5.4	3.2
	82	27.5	4.1	3.1	4.3	3.2	4.5	3.1	4.7	3.3	4.8	3.3	5.1	3.3	5.4	3.2
	86	30.0	4.0	3.0	4.2	3.2	4.5	3.1	4.6	3.3	4.8	3.3	5.1	3.2	5.3	3.2
	91	32.5	4.0	3.0	4.2	3.1	4.4	3.1	4.6	3.3	4.7	3.3	5.0	3.2	5.3	3.1
	95	35.0	3.9	3.0	4.1	3.1	4.4	3.1	4.5	3.2	4.6	3.2	4.9	3.2	5.2	3.1
	100	37.5	3.8	2.9	4.0	3.1	4.3	3.0	4.5	3.2	4.6	3.2	4.9	3.2	5.1	3.1
	104	40.0	3.8	2.9	4.0	3.0	4.3	3.0	4.4	3.2	4.5	3.2	4.8	3.1	5.1	3.1
	110	43.0	3.7	2.8	3.9	3.0	4.2	3.0	4.3	3.2	4.4	3.1	4.8	3.1	5.0	3.1

kcal/h = kW x 860, Btu/h = kW x 3,412

CT

E1. Cooling capacity with PUHY-P200, 250YHM/PUHY-EP200, 250YHM PURY-P200, 250YHM/PURY-EP200, 250YHM

PLFY-P-VLMD-E

CA : Capacity(kW) SHC : Sensible Heat Capacity(kW)

Model size (Rated kW)	Outdoor air temp.		Indoor air temp.													
			71 ˚FDB / 59˚FWB		73˚FDB / 61˚FWB		77˚FDB / 64˚FWB		81˚FDB / 66˚FWB		82˚FDB / 68˚FWB		86˚FDB / 72˚FWB		90˚FDB / 75˚FWB	
			21.5˚CDB / 15˚CWB		23˚CDB / 16˚CWB		25˚CDB / 18˚CWB		27˚CDB / 19˚CWB		28˚CDB / 20˚CWB		30˚CDB / 22˚CWB		32˚CDB / 24˚CWB	
	˚FDB	˚CDB	CA	SHC	CA	SHC	CA	SHC	CA	SHC	CA	SHC	CA	SHC	CA	SHC
20 (2.2)	68	20.0	2.1	1.7	2.2	1.8	2.3	1.8	2.4	1.8	2.5	1.9	2.6	1.9	2.8	1.8
	73	22.5	2.1	1.7	2.2	1.8	2.3	1.8	2.4	1.8	2.5	1.9	2.6	1.9	2.8	1.8
	77	25.0	2.1	1.7	2.2	1.8	2.3	1.8	2.4	1.8	2.4	1.9	2.6	1.9	2.7	1.8
	82	27.5	2.1	1.7	2.1	1.8	2.3	1.8	2.3	1.8	2.4	1.9	2.5	1.8	2.7	1.8
	86	30.0	2.0	1.7	2.1	1.8	2.2	1.7	2.3	1.8	2.3	1.8	2.5	1.8	2.6	1.8
	91	32.5	2.0	1.7	2.1	1.7	2.2	1.7	2.2	1.8	2.3	1.8	2.4	1.8	2.6	1.8
	95	35.0	2.0	1.7	2.0	1.7	2.1	1.7	2.2	1.7	2.3	1.8	2.4	1.8	2.5	1.8
	100	37.5	1.9	1.7	2.0	1.7	2.1	1.7	2.1	1.7	2.2	1.8	2.3	1.8	2.5	1.7
	104	40.0	1.9	1.6	1.9	1.7	2.1	1.7	2.1	1.7	2.2	1.8	2.3	1.7	2.4	1.7
	110	43.0	1.8	1.6	1.9	1.7	2.0	1.7	2.0	1.7	2.1	1.8	2.2	1.7	2.4	1.7
25 (2.8)	68	20.0	2.7	2.0	2.8	2.1	2.9	2.1	3.0	2.1	3.1	2.2	3.3	2.1	3.5	2.1
	73	22.5	2.7	2.0	2.8	2.1	2.9	2.1	3.0	2.1	3.1	2.2	3.3	2.1	3.5	2.1
	77	25.0	2.7	2.0	2.8	2.1	2.9	2.1	3.0	2.1	3.1	2.1	3.3	2.1	3.5	2.1
	82	27.5	2.6	2.0	2.7	2.1	2.9	2.0	3.0	2.1	3.1	2.1	3.2	2.1	3.4	2.1
	86	30.0	2.6	2.0	2.7	2.0	2.8	2.0	2.9	2.0	3.0	2.1	3.1	2.1	3.3	2.0
	91	32.5	2.5	1.9	2.6	2.0	2.8	2.0	2.8	2.0	2.9	2.1	3.1	2.0	3.3	2.0
	95	35.0	2.5	1.9	2.6	2.0	2.7	2.0	2.8	2.0	2.9	2.1	3.0	2.0	3.2	2.0
	100	37.5	2.5	1.9	2.5	2.0	2.7	1.9	2.7	2.0	2.8	2.0	3.0	2.0	3.1	2.0
	104	40.0	2.4	1.9	2.5	1.9	2.6	1.9	2.7	1.9	2.8	2.0	2.9	2.0	3.1	1.9
	110	43.0	2.4	1.8	2.4	1.9	2.6	1.9	2.6	1.9	2.7	2.0	2.8	1.9	3.0	1.9
32 (3.6)	68	20.0	3.4	2.5	3.5	2.6	3.8	2.6	3.9	2.6	4.0	2.7	4.2	2.7	4.6	2.6
	73	22.5	3.4	2.5	3.5	2.6	3.8	2.6	3.9	2.6	4.0	2.7	4.2	2.7	4.6	2.6
	77	25.0	3.4	2.5	3.5	2.6	3.8	2.6	3.9	2.6	4.0	2.7	4.2	2.6	4.5	2.6
	82	27.5	3.4	2.5	3.5	2.6	3.7	2.5	3.8	2.6	3.9	2.7	4.1	2.6	4.4	2.6
	86	30.0	3.3	2.5	3.4	2.5	3.6	2.5	3.7	2.5	3.8	2.6	4.0	2.6	4.3	2.5
	91	32.5	3.3	2.4	3.4	2.5	3.6	2.5	3.7	2.5	3.8	2.6	4.0	2.5	4.2	2.5
	95	35.0	3.2	2.4	3.3	2.5	3.5	2.4	3.6	2.5	3.7	2.6	3.9	2.5	4.1	2.5
	100	37.5	3.2	2.4	3.2	2.4	3.4	2.4	3.5	2.4	3.6	2.5	3.8	2.5	4.0	2.4
	104	40.0	3.1	2.3	3.2	2.4	3.4	2.4	3.5	2.4	3.6	2.5	3.7	2.4	4.0	2.4
	110	43.0	3.0	2.3	3.1	2.4	3.3	2.3	3.3	2.4	3.5	2.5	3.6	2.4	3.9	2.4
40 (4.5)	68	20.0	4.3	2.9	4.4	3.0	4.7	3.0	4.9	3.0	5.0	3.1	5.3	3.1	5.7	3.1
	73	22.5	4.3	2.9	4.4	3.0	4.7	3.0	4.9	3.0	5.0	3.1	5.3	3.1	5.7	3.1
	77	25.0	4.3	2.9	4.4	3.0	4.7	3.0	4.9	3.0	5.0	3.1	5.3	3.1	5.6	3.0
	82	27.5	4.3	2.9	4.4	3.0	4.6	3.0	4.8	3.0	4.9	3.1	5.2	3.0	5.5	3.0
	86	30.0	4.2	2.9	4.3	2.9	4.6	2.9	4.7	2.9	4.8	3.0	5.0	3.0	5.4	2.9
	91	32.5	4.1	2.8	4.2	2.9	4.5	2.9	4.6	2.9	4.7	3.0	5.0	2.9	5.3	2.9
	95	35.0	4.0	2.8	4.1	2.9	4.4	2.8	4.5	2.8	4.6	2.9	4.9	2.9	5.2	2.8
	100	37.5	3.9	2.8	4.1	2.8	4.3	2.8	4.4	2.8	4.5	2.9	4.8	2.8	5.0	2.8
	104	40.0	3.9	2.7	4.0	2.8	4.2	2.8	4.3	2.8	4.5	2.9	4.7	2.8	5.0	2.8
	110	43.0	3.8	2.7	3.9	2.7	4.1	2.7	4.2	2.7	4.3	2.8	4.5	2.8	4.8	2.7
50 (5.6)	68	20.0	5.3	3.7	5.5	3.8	5.9	3.8	6.0	3.8	6.2	3.9	6.6	3.9	7.1	3.9
	73	22.5	5.3	3.7	5.5	3.8	5.9	3.8	6.0	3.8	6.2	3.9	6.6	3.9	7.1	3.9
	77	25.0	5.3	3.7	5.5	3.8	5.9	3.8	6.0	3.8	6.2	3.9	6.6	3.9	6.9	3.8
	82	27.5	5.3	3.7	5.5	3.8	5.8	3.7	5.9	3.8	6.1	3.9	6.4	3.8	6.8	3.8
	86	30.0	5.2	3.6	5.3	3.7	5.7	3.7	5.8	3.7	6.0	3.8	6.3	3.7	6.7	3.7
	91	32.5	5.1	3.6	5.3	3.7	5.5	3.6	5.7	3.6	5.9	3.8	6.2	3.7	6.6	3.6
	95	35.0	5.0	3.5	5.2	3.6	5.5	3.6	5.6	3.6	5.7	3.7	6.0	3.6	6.4	3.6
	100	37.5	4.9	3.5	5.0	3.6	5.3	3.5	5.5	3.5	5.6	3.7	5.9	3.6	6.3	3.5
	104	40.0	4.8	3.4	5.0	3.5	5.3	3.5	5.4	3.5	5.5	3.6	5.8	3.5	6.2	3.5
	110	43.0	4.7	3.4	4.8	3.5	5.1	3.4	5.2	3.4	5.4	3.5	5.7	3.5	6.0	3.4
63 (7.1)	68	20.0	6.7	4.8	7.0	4.9	7.5	4.9	7.7	4.9	7.9	5.1	8.4	5.0	9.0	5.0
	73	22.5	6.7	4.8	7.0	4.9	7.5	4.9	7.7	4.9	7.9	5.1	8.4	5.0	9.0	5.0
	77	25.0	6.7	4.8	7.0	4.9	7.5	4.9	7.7	4.9	7.8	5.1	8.3	5.0	8.8	4.9
	82	27.5	6.7	4.8	6.9	4.9	7.3	4.8	7.5	4.9	7.7	5.0	8.1	4.9	8.7	4.9
	86	30.0	6.6	4.7	6.8	4.8	7.2	4.8	7.4	4.8	7.6	5.0	8.0	4.9	8.5	4.8
	91	32.5	6.5	4.6	6.7	4.8	7.0	4.7	7.2	4.7	7.4	4.9	7.8	4.8	8.3	4.7
	95	35.0	6.4	4.6	6.5	4.7	6.9	4.6	7.1	4.7	7.3	4.8	7.7	4.7	8.1	4.7
	100	37.5	6.2	4.5	6.4	4.6	6.8	4.6	6.9	4.6	7.1	4.8	7.5	4.7	8.0	4.6
	104	40.0	6.1	4.4	6.3	4.6	6.7	4.5	6.8	4.5	7.0	4.7	7.3	4.6	7.8	4.6
	110	43.0	6.0	4.4	6.1	4.5	6.5	4.4	6.6	4.5	6.8	4.6	7.2	4.5	7.6	4.5

kcal/h = kW x 860, Btu/h = kW x 3,412

E1. Cooling capacity with PUHY-P200, 250YHM/PUHY-EP200, 250YHM PURY-P200, 250YHM/PURY-EP200, 250YHM

PLFY-P-VLMD-E

CA : Capacity(kW) SHC : Sensible Heat Capacity(kW)

Model size (Rated kW)	Outdoor air temp.		Indoor air temp.													
			71 ˚FDB / 59˚FWB		73˚FDB / 61˚FWB		77˚FDB / 64˚FWB		81˚FDB / 66˚FWB		82˚FDB / 68˚FWB		86˚FDB / 72˚FWB		90˚FDB / 75˚FWB	
			21.5˚CDB / 15˚CWB		23˚CDB / 16˚CWB		25˚CDB / 18˚CWB		27˚CDB / 19˚CWB		28˚CDB / 20˚CWB		30˚CDB / 22˚CWB		32˚CDB / 24˚CWB	
	˚FDB	˚CDB	CA	SHC	CA	SHC	CA	SHC	CA	SHC	CA	SHC	CA	SHC	CA	SHC
80 (9.0)	68	20.0	8.6	6.1	8.9	6.2	9.5	6.2	9.7	6.2	10.0	6.5	10.6	6.4	11.4	6.3
	73	22.5	8.6	6.1	8.9	6.2	9.5	6.2	9.7	6.2	10.0	6.5	10.6	6.4	11.4	6.3
	77	25.0	8.6	6.1	8.9	6.2	9.5	6.2	9.7	6.2	9.9	6.4	10.5	6.3	11.2	6.2
	82	27.5	8.5	6.0	8.8	6.2	9.3	6.1	9.5	6.2	9.8	6.4	10.3	6.2	11.0	6.2
	86	30.0	8.4	6.0	8.6	6.1	9.1	6.0	9.4	6.1	9.6	6.3	10.1	6.2	10.8	6.1
	91	32.5	8.2	5.9	8.5	6.0	8.9	5.9	9.1	6.0	9.4	6.2	9.9	6.1	10.5	6.0
	95	35.0	8.1	5.8	8.3	5.9	8.8	5.9	9.0	5.9	9.2	6.1	9.7	6.0	10.3	5.9
	100	37.5	7.9	5.7	8.1	5.8	8.6	5.8	8.8	5.8	9.0	6.0	9.5	5.9	10.1	5.8
	104	40.0	7.7	5.6	8.0	5.8	8.5	5.7	8.6	5.8	8.9	6.0	9.3	5.8	9.9	5.8
	110	43.0	7.6	5.5	7.8	5.7	8.2	5.6	8.4	5.6	8.6	5.9	9.1	5.8	9.6	5.7
100 (11.2)	68	20.0	10.6	7.7	11.0	7.9	11.8	7.9	12.1	7.9	12.5	8.2	13.2	8.1	14.2	8.1
	73	22.5	10.6	7.7	11.0	7.9	11.8	7.9	12.1	7.9	12.5	8.2	13.2	8.1	14.2	8.1
	77	25.0	10.6	7.7	11.0	7.9	11.8	7.9	12.1	7.9	12.4	8.2	13.1	8.1	13.9	7.9
	82	27.5	10.6	7.7	10.9	7.9	11.5	7.8	11.9	7.8	12.2	8.1	12.8	8.0	13.7	7.9
	86	30.0	10.4	7.6	10.7	7.8	11.3	7.7	11.6	7.7	11.9	8.0	12.5	7.9	13.4	7.8
	91	32.5	10.2	7.5	10.5	7.7	11.1	7.6	11.4	7.6	11.7	7.9	12.3	7.8	13.1	7.7
	95	35.0	10.0	7.4	10.3	7.6	10.9	7.5	11.2	7.6	11.5	7.8	12.1	7.7	12.8	7.6
	100	37.5	9.8	7.3	10.1	7.4	10.7	7.4	10.9	7.4	11.3	7.7	11.9	7.6	12.5	7.5
	104	40.0	9.6	7.2	9.9	7.4	10.5	7.3	10.8	7.4	11.1	7.6	11.6	7.5	12.3	7.4
	110	43.0	9.4	7.1	9.7	7.3	10.2	7.2	10.4	7.2	10.8	7.5	11.3	7.4	12.0	7.3
125 (14.0)	68	20.0	13.3	9.8	13.8	10.1	14.7	10.0	15.1	10.1	15.6	10.5	16.5	10.3	17.7	10.3
	73	22.5	13.3	9.8	13.8	10.1	14.7	10.0	15.1	10.1	15.6	10.5	16.5	10.3	17.7	10.3
	77	25.0	13.3	9.8	13.8	10.1	14.7	10.0	15.1	10.1	15.5	10.4	16.4	10.3	17.4	10.1
	82	27.5	13.2	9.7	13.7	10.0	14.4	9.9	14.8	10.0	15.3	10.4	16.0	10.2	17.1	10.0
	86	30.0	13.0	9.6	13.4	9.9	14.2	9.8	14.6	9.9	14.9	10.2	15.7	10.0	16.7	9.9
	91	32.5	12.7	9.5	13.2	9.8	13.9	9.6	14.2	9.7	14.6	10.1	15.4	9.9	16.4	9.8
	95	35.0	12.5	9.4	12.9	9.6	13.7	9.5	14.0	9.6	14.4	10.0	15.1	9.8	16.0	9.6
	100	37.5	12.3	9.2	12.6	9.5	13.4	9.4	13.7	9.5	14.1	9.9	14.8	9.7	15.7	9.5
	104	40.0	12.0	9.1	12.4	9.4	13.2	9.3	13.4	9.4	13.9	9.8	14.5	9.6	15.4	9.4
	110	43.0	11.8	9.0	12.1	9.3	12.8	9.1	13.0	9.2	13.4	9.6	14.1	9.4	15.0	9.3

kcal/h = kW x 860, Btu/h = kW x 3,412

CT

E2. Cooling capacity with PUHY-P300-400YHM /PUHY-EP300, 400Y(S)HM PURY-P300-400YHM /PURY-EP300, 400Y(S)HM

PLFY-P-VLMD-E

CA : Capacity(kW) SHC : Sensible Heat Capacity(kW)

Model size (Rated kW)	Outdoor air temp.		Indoor air temp.													
			71 ˚FDB / 59˚FWB		73˚FDB / 61˚FWB		77˚FDB / 64˚FWB		81˚FDB / 66˚FWB		82˚FDB / 68˚FWB		86˚FDB / 72˚FWB		90˚FDB / 75˚FWB	
			21.5˚CDB / 15˚CWB		23˚CDB / 16˚CWB		25˚CDB / 18˚CWB		27˚CDB / 19˚CWB		28˚CDB / 20˚CWB		30˚CDB / 22˚CWB		32˚CDB / 24˚CWB	
	˚FDB	˚CDB	CA	SHC	CA	SHC	CA	SHC	CA	SHC	CA	SHC	CA	SHC	CA	SHC
20 (2.2)	68	20.0	2.1	1.7	2.2	1.8	2.4	1.8	2.5	1.8	2.5	1.9	2.7	1.9	2.9	1.9
	73	22.5	2.1	1.7	2.2	1.8	2.3	1.8	2.4	1.8	2.5	1.9	2.6	1.9	2.8	1.9
	77	25.0	2.1	1.7	2.2	1.8	2.3	1.8	2.4	1.8	2.4	1.9	2.6	1.9	2.8	1.8
	82	27.5	2.1	1.7	2.1	1.8	2.3	1.8	2.3	1.8	2.4	1.9	2.5	1.8	2.7	1.8
	86	30.0	2.0	1.7	2.1	1.7	2.2	1.7	2.3	1.8	2.4	1.8	2.5	1.8	2.6	1.8
	91	32.5	2.0	1.7	2.0	1.7	2.2	1.7	2.2	1.8	2.3	1.8	2.4	1.8	2.6	1.8
	95	35.0	2.0	1.7	2.0	1.7	2.1	1.7	2.2	1.7	2.3	1.8	2.4	1.8	2.5	1.8
	100	37.5	1.9	1.7	1.9	1.7	2.1	1.7	2.1	1.7	2.2	1.8	2.4	1.8	2.5	1.7
	104	40.0	1.9	1.6	1.9	1.7	2.0	1.7	2.1	1.7	2.4	1.9	2.3	1.8	2.4	1.7
	110	43.0	1.8	1.6	1.8	1.6	2.0	1.6	2.0	1.7	2.1	1.8	2.2	1.7	2.4	1.7
25 (2.8)	68	20.0	2.7	2.0	2.8	2.1	3.0	2.1	3.1	2.1	3.2	2.2	3.4	2.2	3.6	2.1
	73	22.5	2.7	2.0	2.8	2.1	3.0	2.1	3.1	2.1	3.2	2.2	3.4	2.2	3.6	2.1
	77	25.0	2.7	2.0	2.7	2.1	2.9	2.0	3.0	2.1	3.1	2.2	3.3	2.1	3.5	2.1
	82	27.5	2.6	2.0	2.7	2.0	2.9	2.0	3.0	2.1	3.1	2.1	3.2	2.1	3.4	2.1
	86	30.0	2.6	2.0	2.6	2.0	2.8	2.0	2.9	2.0	3.0	2.1	3.2	2.1	3.4	2.0
	91	32.5	2.5	1.9	2.6	2.0	2.8	2.0	2.9	2.0	2.9	2.1	3.1	2.1	3.3	2.0
	95	35.0	2.5	1.9	2.5	2.0	2.7	1.9	2.8	2.0	2.9	2.1	3.1	2.0	3.2	2.0
	100	37.5	2.5	1.9	2.5	1.9	2.6	1.9	2.7	2.0	2.8	2.0	3.0	2.0	3.2	2.0
	104	40.0	2.4	1.9	2.4	1.9	2.6	1.9	2.7	1.9	3.0	2.1	2.9	2.0	3.1	2.0
	110	43.0	2.4	1.8	2.4	1.9	2.5	1.9	2.6	1.9	2.7	2.0	2.8	2.0	3.0	1.9
32 (3.6)	68	20.0	3.5	2.5	3.6	2.6	3.9	2.6	4.0	2.7	4.2	2.8	4.4	2.7	4.7	2.7
	73	22.5	3.5	2.5	3.6	2.6	3.8	2.6	4.0	2.6	4.1	2.7	4.3	2.7	4.6	2.6
	77	25.0	3.4	2.5	3.5	2.6	3.8	2.6	3.9	2.6	4.0	2.7	4.2	2.7	4.5	2.6
	82	27.5	3.4	2.5	3.5	2.5	3.7	2.5	3.8	2.6	3.9	2.7	4.2	2.6	4.4	2.6
	86	30.0	3.3	2.4	3.4	2.5	3.6	2.5	3.7	2.5	3.9	2.6	4.1	2.6	4.3	2.5
	91	32.5	3.3	2.4	3.3	2.5	3.5	2.5	3.7	2.5	3.8	2.6	4.0	2.6	4.2	2.5
	95	35.0	3.2	2.4	3.3	2.4	3.5	2.4	3.6	2.5	3.7	2.6	3.9	2.5	4.2	2.5
	100	37.5	3.2	2.4	3.2	2.4	3.4	2.4	3.5	2.4	3.6	2.5	3.9	2.5	4.1	2.5
	104	40.0	3.1	2.3	3.1	2.4	3.3	2.4	3.4	2.4	3.9	2.6	3.8	2.5	4.0	2.4
	110	43.0	3.0	2.3	3.0	2.3	3.2	2.3	3.3	2.4	3.4	2.4	3.7	2.4	3.9	2.4
40 (4.5)	68	20.0	4.4	3.0	4.5	3.1	4.9	3.1	5.0	3.1	5.2	3.2	5.5	3.2	5.9	3.1
	73	22.5	4.3	3.0	4.5	3.1	4.8	3.0	5.0	3.1	5.1	3.2	5.4	3.1	5.7	3.1
	77	25.0	4.3	3.0	4.4	3.0	4.7	3.0	4.9	3.0	5.0	3.1	5.3	3.1	5.6	3.0
	82	27.5	4.2	2.9	4.3	3.0	4.6	2.9	4.8	3.0	4.9	3.1	5.2	3.0	5.5	3.0
	86	30.0	4.1	2.9	4.2	2.9	4.5	2.9	4.7	2.9	4.8	3.0	5.1	3.0	5.4	2.9
	91	32.5	4.1	2.8	4.2	2.9	4.4	2.9	4.6	2.9	4.7	3.0	5.0	2.9	5.3	2.9
	95	35.0	4.0	2.8	4.1	2.8	4.3	2.8	4.5	2.8	4.6	2.9	4.9	2.9	5.2	2.9
	100	37.5	4.0	2.8	4.0	2.8	4.3	2.8	4.4	2.8	4.5	2.9	4.8	2.9	5.1	2.8
	104	40.0	3.9	2.7	3.9	2.7	4.2	2.7	4.3	2.8	4.9	3.1	4.7	2.8	5.0	2.8
	110	43.0	3.8	2.7	3.8	2.7	4.1	2.7	4.2	2.7	4.3	2.8	4.6	2.8	4.8	2.7
50 (5.6)	68	20.0	5.4	3.8	5.6	3.9	6.0	3.9	6.3	3.9	6.5	4.0	6.9	4.0	7.3	3.9
	73	22.5	5.4	3.7	5.6	3.8	6.0	3.8	6.2	3.9	6.4	4.0	6.7	3.9	7.1	3.9
	77	25.0	5.3	3.7	5.5	3.8	5.9	3.8	6.0	3.8	6.2	3.9	6.6	3.9	7.0	3.8
	82	27.5	5.2	3.7	5.4	3.7	5.7	3.7	5.9	3.8	6.1	3.9	6.5	3.8	6.9	3.8
	86	30.0	5.2	3.6	5.3	3.7	5.6	3.7	5.8	3.7	6.0	3.8	6.4	3.8	6.7	3.7
	91	32.5	5.1	3.6	5.2	3.6	5.5	3.6	5.7	3.6	5.9	3.8	6.2	3.7	6.6	3.7
	95	35.0	5.0	3.5	5.1	3.6	5.4	3.5	5.6	3.6	5.8	3.7	6.1	3.7	6.5	3.6
	100	37.5	4.9	3.5	5.0	3.5	5.3	3.5	5.5	3.5	5.7	3.7	6.0	3.6	6.3	3.6
	104	40.0	4.8	3.4	4.8	3.5	5.2	3.4	5.3	3.5	6.1	3.9	5.9	3.6	6.2	3.5
	110	43.0	4.7	3.4	4.7	3.4	5.0	3.4	5.2	3.4	5.3	3.5	5.7	3.5	6.0	3.4
63 (7.1)	68	20.0	6.9	4.9	7.1	5.0	7.7	5.0	8.0	5.1	8.2	5.2	8.7	5.2	9.2	5.1
	73	22.5	6.9	4.8	7.1	5.0	7.6	4.9	7.8	5.0	8.1	5.2	8.5	5.1	9.1	5.0
	77	25.0	6.8	4.8	7.0	4.9	7.4	4.9	7.7	4.9	7.9	5.1	8.4	5.0	8.9	5.0
	82	27.5	6.6	4.7	6.8	4.8	7.3	4.8	7.5	4.9	7.8	5.0	8.2	5.0	8.7	4.9
	86	30.0	6.5	4.7	6.7	4.8	7.1	4.7	7.4	4.8	7.6	5.0	8.1	4.9	8.5	4.8
	91	32.5	6.4	4.6	6.6	4.7	7.0	4.7	7.2	4.7	7.5	4.9	7.9	4.8	8.4	4.8
	95	35.0	6.3	4.6	6.4	4.6	6.8	4.6	7.1	4.7	7.3	4.8	7.7	4.8	8.2	4.7
	100	37.5	6.2	4.5	6.3	4.6	6.7	4.5	6.9	4.6	7.2	4.8	7.6	4.7	8.0	4.6
	104	40.0	6.1	4.5	6.1	4.5	6.6	4.5	6.8	4.5	7.7	5.0	7.4	4.6	7.8	4.6
	110	43.0	6.0	4.4	6.0	4.4	6.4	4.4	6.6	4.5	6.8	4.6	7.2	4.6	7.6	4.5

kcal/h = kW x 860, Btu/h = kW x 3,412

E2. Cooling capacity with PUHY-P300-400YHM /PUHY-EP300, 400Y(S)HM PURY-P300-400YHM /PURY-EP300, 400Y(S)HM

PLFY-P-VLMD-E

CA : Capacity(kW) SHC : Sensible Heat Capacity(kW)

Model size (Rated kW)	Outdoor air temp.		Indoor air temp.													
			71 ˚FDB / 59˚FWB		73˚FDB / 61˚FWB		77˚FDB / 64˚FWB		81˚FDB / 66˚FWB		82˚FDB / 68˚FWB		86˚FDB / 72˚FWB		90˚FDB / 75˚FWB	
			21.5˚CDB / 15˚CWB		23˚CDB / 16˚CWB		25˚CDB / 18˚CWB		27˚CDB / 19˚CWB		28˚CDB / 20˚CWB		30˚CDB / 22˚CWB		32˚CDB / 24˚CWB	
	˚FDB	˚CDB	CA	SHC	CA	SHC	CA	SHC	CA	SHC	CA	SHC	CA	SHC	CA	SHC
80 (9.0)	68	20.0	8.7	6.1	9.0	6.3	9.7	6.3	10.1	6.4	10.4	6.6	11.0	6.5	11.7	6.5
	73	22.5	8.7	6.1	9.0	6.3	9.6	6.3	9.9	6.3	10.2	6.6	10.8	6.5	11.5	6.4
	77	25.0	8.6	6.1	8.8	6.2	9.4	6.2	9.7	6.2	10.0	6.5	10.6	6.4	11.3	6.3
	82	27.5	8.4	6.0	8.6	6.1	9.2	6.1	9.5	6.2	9.8	6.4	10.4	6.3	11.0	6.2
	86	30.0	8.3	5.9	8.5	6.0	9.0	6.0	9.4	6.1	9.6	6.3	10.3	6.2	10.8	6.1
	91	32.5	8.1	5.8	8.3	6.0	8.9	5.9	9.2	6.0	9.5	6.2	10.0	6.1	10.6	6.0
	95	35.0	8.0	5.8	8.1	5.9	8.6	5.8	9.0	5.9	9.3	6.1	9.8	6.0	10.4	5.9
	100	37.5	7.9	5.7	8.0	5.8	8.5	5.7	8.8	5.8	9.1	6.1	9.6	6.0	10.2	5.9
	104	40.0	7.8	5.7	7.8	5.7	8.3	5.7	8.6	5.7	9.8	6.4	9.4	5.9	9.9	5.8
	110	43.0	7.6	5.5	7.6	5.6	8.1	5.6	8.4	5.6	8.6	5.8	9.1	5.8	9.7	5.7
100 (11.2)	68	20.0	10.9	7.8	11.3	8.0	12.1	8.0	12.5	8.1	12.9	8.4	13.7	8.3	14.6	8.2
	73	22.5	10.8	7.8	11.2	8.0	11.9	7.9	12.3	8.0	12.7	8.3	13.5	8.2	14.3	8.1
	77	25.0	10.7	7.7	11.0	7.9	11.7	7.8	12.1	7.9	12.5	8.2	13.2	8.1	14.0	8.0
	82	27.5	10.5	7.6	10.8	7.8	11.5	7.7	11.9	7.8	12.2	8.1	13.0	8.0	13.7	7.9
	86	30.0	10.3	7.5	10.5	7.7	11.3	7.6	11.6	7.7	12.0	8.0	12.8	7.9	13.4	7.8
	91	32.5	10.1	7.4	10.4	7.6	11.0	7.5	11.4	7.6	11.8	7.9	12.4	7.8	13.2	7.7
	95	35.0	10.0	7.3	10.1	7.5	10.8	7.4	11.2	7.6	11.5	7.8	12.2	7.7	12.9	7.6
	100	37.5	9.9	7.3	9.9	7.4	10.6	7.3	10.9	7.4	11.3	7.7	12.0	7.6	12.7	7.5
	104	40.0	9.7	7.2	9.7	7.3	10.4	7.2	10.7	7.3	12.2	8.1	11.7	7.5	12.4	7.4
	110	43.0	9.4	7.1	9.4	7.1	10.1	7.1	10.4	7.2	10.7	7.5	11.4	7.4	12.0	7.3
125 (14.0)	68	20.0	13.6	9.9	14.1	10.2	15.1	10.2	15.7	10.4	16.2	10.7	17.2	10.6	18.2	10.4
	73	22.5	13.5	9.9	14.0	10.2	14.9	10.1	15.4	10.2	15.9	10.6	16.8	10.5	17.9	10.3
	77	25.0	13.4	9.8	13.7	10.0	14.6	10.0	15.1	10.1	15.6	10.5	16.5	10.3	17.5	10.2
	82	27.5	13.1	9.7	13.4	9.9	14.4	9.8	14.8	10.0	15.3	10.4	16.2	10.2	17.2	10.1
	86	30.0	12.9	9.5	13.2	9.8	14.1	9.7	14.6	9.9	15.0	10.2	16.0	10.1	16.8	9.9
	91	32.5	12.7	9.4	13.0	9.7	13.8	9.6	14.3	9.8	14.7	10.1	15.5	10.0	16.5	9.8
	95	35.0	12.5	9.3	12.7	9.5	13.4	9.4	14.0	9.6	14.4	10.0	15.3	9.9	16.2	9.7
	100	37.5	12.3	9.3	12.4	9.4	13.2	9.3	13.7	9.5	14.1	9.9	15.0	9.7	15.8	9.6
	104	40.0	12.1	9.2	12.1	9.3	13.0	9.2	13.4	9.4	15.2	10.3	14.6	9.6	15.5	9.4
	110	43.0	11.8	9.0	11.8	9.1	12.6	9.1	13.0	9.2	13.4	9.6	14.2	9.4	15.1	9.3

kcal/h = kW x 860, Btu/h = kW x 3,412

CT

E3. Cooling capacity with PUHY-P450-650Y(S)HM/PUHY-EP450-650YSHM PURY-P450-650YSHM/PURY-EP450-600YSHM

PLFY-P-VLMD-E

CA : Capacity(kW) SHC : Sensible Heat Capacity(kW)

Model size (Rated kW)	Outdoor air temp.		Indoor air temp.													
			71 ˚FDB / 59˚FWB		73˚FDB / 61˚FWB		77˚FDB / 64˚FWB		81˚FDB / 66˚FWB		82˚FDB / 68˚FWB		86˚FDB / 72˚FWB		90˚FDB / 75˚FWB	
			21.5˚CDB / 15˚CWB		23˚CDB / 16˚CWB		25˚CDB / 18˚CWB		27˚CDB / 19˚CWB		28˚CDB / 20˚CWB		30˚CDB / 22˚CWB		32˚CDB / 24˚CWB	
	˚FDB	˚CDB	CA	SHC	CA	SHC	CA	SHC	CA	SHC	CA	SHC	CA	SHC	CA	SHC
20 (2.2)	68	20.0	2.1	1.7	2.1	1.8	2.3	1.8	2.4	1.8	2.5	1.9	2.6	1.9	2.8	1.8
	73	22.5	2.1	1.7	2.1	1.8	2.3	1.8	2.3	1.8	2.4	1.9	2.6	1.9	2.7	1.8
	77	25.0	2.0	1.7	2.1	1.8	2.2	1.7	2.3	1.8	2.4	1.9	2.6	1.8	2.7	1.8
	82	27.5	2.0	1.7	2.1	1.7	2.2	1.7	2.3	1.8	2.4	1.9	2.5	1.8	2.6	1.8
	86	30.0	2.0	1.7	2.0	1.7	2.2	1.7	2.3	1.8	2.4	1.8	2.5	1.8	2.7	1.8
	91	32.5	2.0	1.7	2.0	1.7	2.2	1.7	2.2	1.8	2.3	1.8	2.5	1.8	2.6	1.8
	95	35.0	2.0	1.7	2.0	1.7	2.1	1.7	2.2	1.7	2.3	1.8	2.5	1.8	2.6	1.8
	100	37.5	1.9	1.7	2.0	1.7	2.1	1.7	2.2	1.7	2.3	1.8	2.4	1.8	2.6	1.8
	104	40.0	1.9	1.6	1.9	1.7	2.1	1.7	2.1	1.7	2.2	1.8	2.4	1.8	2.6	1.8
	110	43.0	1.9	1.6	1.9	1.7	2.1	1.7	2.1	1.7	2.2	1.8	2.4	1.8	2.6	1.8
25 (2.8)	68	20.0	2.6	2.0	2.7	2.1	2.9	2.0	3.0	2.1	3.1	2.2	3.3	2.1	3.5	2.1
	73	22.5	2.6	2.0	2.7	2.0	2.9	2.0	3.0	2.1	3.1	2.1	3.3	2.1	3.5	2.1
	77	25.0	2.6	2.0	2.7	2.0	2.9	2.0	2.9	2.0	3.1	2.1	3.2	2.1	3.5	2.1
	82	27.5	2.6	2.0	2.6	2.0	2.8	2.0	2.9	2.0	3.0	2.1	3.2	2.1	3.4	2.0
	86	30.0	2.5	1.9	2.6	2.0	2.8	2.0	2.9	2.0	3.0	2.1	3.2	2.1	3.4	2.1
	91	32.5	2.5	1.9	2.6	2.0	2.7	2.0	2.8	2.0	3.0	2.1	3.2	2.1	3.4	2.0
	95	35.0	2.5	1.9	2.5	2.0	2.7	2.0	2.8	2.0	2.9	2.1	3.1	2.1	3.3	2.0
	100	37.5	2.5	1.9	2.5	1.9	2.7	1.9	2.8	2.0	2.9	2.1	3.1	2.0	3.3	2.0
	104	40.0	2.4	1.9	2.5	1.9	2.7	1.9	2.7	1.9	2.9	2.0	3.1	2.0	3.3	2.0
	110	43.0	2.4	1.9	2.5	1.9	2.6	1.9	2.7	1.9	2.8	2.0	3.0	2.0	3.2	2.0
32 (3.6)	68	20.0	3.4	2.5	3.5	2.6	3.7	2.5	3.9	2.6	4.0	2.7	4.2	2.7	4.5	2.6
	73	22.5	3.4	2.5	3.5	2.5	3.7	2.5	3.8	2.6	4.0	2.7	4.2	2.6	4.5	2.6
	77	25.0	3.3	2.5	3.4	2.5	3.7	2.5	3.8	2.5	3.9	2.7	4.2	2.6	4.4	2.6
	82	27.5	3.3	2.4	3.4	2.5	3.6	2.5	3.7	2.5	3.9	2.6	4.1	2.6	4.3	2.5
	86	30.0	3.3	2.4	3.3	2.5	3.6	2.5	3.7	2.5	3.9	2.6	4.1	2.6	4.4	2.6
	91	32.5	3.2	2.4	3.3	2.5	3.5	2.4	3.6	2.5	3.8	2.6	4.1	2.6	4.3	2.5
	95	35.0	3.2	2.4	3.3	2.4	3.5	2.4	3.6	2.5	3.7	2.6	4.0	2.6	4.3	2.5
	100	37.5	3.2	2.4	3.2	2.4	3.5	2.4	3.5	2.4	3.7	2.6	4.0	2.5	4.2	2.5
	104	40.0	3.1	2.3	3.2	2.4	3.4	2.4	3.5	2.4	3.7	2.5	4.0	2.5	4.2	2.5
	110	43.0	3.1	2.3	3.2	2.4	3.4	2.4	3.5	2.4	3.6	2.5	3.9	2.5	4.2	2.5
40 (4.5)	68	20.0	4.3	2.9	4.4	3.0	4.7	3.0	4.8	3.0	5.0	3.1	5.3	3.1	5.7	3.0
	73	22.5	4.2	2.9	4.3	3.0	4.6	3.0	4.8	3.0	5.0	3.1	5.3	3.1	5.6	3.0
	77	25.0	4.2	2.9	4.3	2.9	4.6	2.9	4.7	3.0	4.9	3.1	5.2	3.0	5.6	3.0
	82	27.5	4.1	2.9	4.2	2.9	4.5	2.9	4.7	2.9	4.9	3.1	5.2	3.0	5.4	2.9
	86	30.0	4.1	2.8	4.2	2.9	4.5	2.9	4.6	2.9	4.8	3.0	5.1	3.0	5.4	3.0
	91	32.5	4.1	2.8	4.1	2.9	4.4	2.8	4.5	2.9	4.8	3.0	5.1	3.0	5.4	2.9
	95	35.0	4.0	2.8	4.1	2.8	4.4	2.8	4.5	2.8	4.7	3.0	5.0	3.0	5.4	2.9
	100	37.5	4.0	2.8	4.0	2.8	4.3	2.8	4.4	2.8	4.7	3.0	5.0	2.9	5.3	2.9
	104	40.0	3.9	2.7	4.0	2.8	4.3	2.8	4.4	2.8	4.6	2.9	5.0	2.9	5.3	2.9
	110	43.0	3.9	2.7	3.9	2.8	4.2	2.8	4.3	2.8	4.5	2.9	4.9	2.9	5.2	2.9
50 (5.6)	68	20.0	5.3	3.7	5.5	3.8	5.8	3.8	6.0	3.8	6.2	3.9	6.6	3.9	7.1	3.8
	73	22.5	5.3	3.7	5.4	3.7	5.8	3.7	5.9	3.8	6.2	3.9	6.6	3.9	7.0	3.8
	77	25.0	5.2	3.6	5.3	3.7	5.7	3.7	5.9	3.7	6.1	3.9	6.5	3.8	6.9	3.8
	82	27.5	5.2	3.6	5.3	3.7	5.7	3.7	5.8	3.7	6.0	3.8	6.4	3.8	6.7	3.7
	86	30.0	5.1	3.6	5.2	3.6	5.6	3.6	5.8	3.7	6.0	3.8	6.4	3.8	6.8	3.7
	91	32.5	5.0	3.5	5.2	3.6	5.5	3.6	5.7	3.6	5.9	3.8	6.3	3.8	6.7	3.7
	95	35.0	5.0	3.5	5.1	3.6	5.5	3.6	5.6	3.6	5.8	3.7	6.3	3.7	6.7	3.7
	100	37.5	4.9	3.5	5.0	3.5	5.4	3.5	5.5	3.6	5.8	3.7	6.2	3.7	6.6	3.7
	104	40.0	4.8	3.4	5.0	3.5	5.3	3.5	5.4	3.5	5.7	3.7	6.2	3.7	6.6	3.6
	110	43.0	4.8	3.4	4.9	3.5	5.3	3.5	5.4	3.5	5.7	3.7	6.0	3.6	6.5	3.6
63 (7.1)	68	20.0	6.7	4.8	6.9	4.9	7.4	4.9	7.6	4.9	7.9	5.1	8.4	5.0	8.9	5.0
	73	22.5	6.7	4.7	6.9	4.8	7.3	4.8	7.5	4.9	7.8	5.1	8.3	5.0	8.8	4.9
	77	25.0	6.6	4.7	6.8	4.8	7.2	4.8	7.5	4.8	7.7	5.0	8.2	5.0	8.8	4.9
	82	27.5	6.5	4.7	6.7	4.8	7.2	4.8	7.4	4.8	7.7	5.0	8.2	4.9	8.5	4.8
	86	30.0	6.5	4.6	6.6	4.7	7.1	4.7	7.3	4.8	7.6	5.0	8.1	4.9	8.6	4.8
	91	32.5	6.4	4.6	6.5	4.7	7.0	4.7	7.2	4.7	7.5	4.9	8.0	4.9	8.5	4.8
	95	35.0	6.3	4.6	6.4	4.6	6.9	4.6	7.1	4.7	7.4	4.9	8.0	4.9	8.4	4.8
	100	37.5	6.2	4.5	6.4	4.6	6.8	4.6	7.0	4.6	7.3	4.9	7.8	4.8	8.4	4.8
	104	40.0	6.1	4.5	6.3	4.6	6.8	4.6	6.9	4.6	7.2	4.8	7.8	4.8	8.3	4.7
	110	43.0	6.1	4.4	6.2	4.5	6.7	4.5	6.8	4.5	7.2	4.8	7.7	4.7	8.2	4.7

kcal/h = kW x 860, Btu/h = kW x 3,412

E3. Cooling capacity with PUHY-P450-650Y(S)HM/PUHY-EP450-650YSHM PURY-P450-650YSHM/PURY-EP450-600YSHM

PLFY-P-VLMD-E

CA : Capacity(kW) SHC : Sensible Heat Capacity(kW)

Model size (Rated kW)	Outdoor air temp.		Indoor air temp.													
			71 ˚FDB / 59˚FWB		73˚FDB / 61˚FWB		77˚FDB / 64˚FWB		81˚FDB / 66˚FWB		82˚FDB / 68˚FWB		86˚FDB / 72˚FWB		90˚FDB / 75˚FWB	
			21.5˚CDB / 15˚CWB		23˚CDB / 16˚CWB		25˚CDB / 18˚CWB		27˚CDB / 19˚CWB		28˚CDB / 20˚CWB		30˚CDB / 22˚CWB		32˚CDB / 24˚CWB	
	˚FDB	˚CDB	CA	SHC	CA	SHC	CA	SHC	CA	SHC	CA	SHC	CA	SHC	CA	SHC
80 (9.0)	68	20.0	8.5	6.0	8.8	6.2	9.4	6.2	9.6	6.2	10.0	6.5	10.6	6.4	11.3	6.3
	73	22.5	8.5	6.0	8.7	6.1	9.3	6.1	9.5	6.2	9.9	6.4	10.6	6.4	11.2	6.3
	77	25.0	8.4	6.0	8.6	6.1	9.2	6.1	9.5	6.1	9.8	6.4	10.4	6.3	11.1	6.2
	82	27.5	8.3	5.9	8.5	6.0	9.1	6.0	9.4	6.1	9.7	6.3	10.4	6.3	10.8	6.1
	86	30.0	8.2	5.9	8.4	6.0	9.0	6.0	9.3	6.0	9.6	6.3	10.3	6.2	10.9	6.1
	91	32.5	8.1	5.8	8.3	5.9	8.8	5.9	9.1	6.0	9.5	6.3	10.2	6.2	10.8	6.1
	95	35.0	8.0	5.8	8.1	5.9	8.8	5.9	9.0	5.9	9.4	6.2	10.1	6.2	10.7	6.1
	100	37.5	7.9	5.7	8.1	5.8	8.6	5.8	8.9	5.9	9.3	6.2	9.9	6.1	10.6	6.0
	104	40.0	7.8	5.7	8.0	5.8	8.6	5.8	8.7	5.8	9.2	6.1	9.9	6.1	10.5	6.0
	110	43.0	7.7	5.6	7.9	5.7	8.5	5.7	8.6	5.8	9.1	6.1	9.7	6.0	10.4	6.0
100 (11.2)	68	20.0	10.6	7.7	10.9	7.9	11.6	7.8	12.0	7.9	12.5	8.2	13.2	8.1	14.1	8.0
	73	22.5	10.5	7.6	10.8	7.8	11.5	7.8	11.9	7.8	12.3	8.2	13.2	8.1	13.9	8.0
	77	25.0	10.4	7.6	10.7	7.8	11.4	7.7	11.8	7.8	12.2	8.1	13.0	8.0	13.8	7.9
	82	27.5	10.3	7.5	10.5	7.7	11.3	7.7	11.6	7.7	12.1	8.1	12.9	8.0	13.4	7.8
	86	30.0	10.2	7.5	10.4	7.6	11.2	7.6	11.5	7.7	12.0	8.0	12.8	7.9	13.6	7.8
	91	32.5	10.1	7.4	10.3	7.6	11.0	7.5	11.3	7.6	11.9	8.0	12.7	7.9	13.4	7.8
	95	35.0	10.0	7.3	10.1	7.5	10.9	7.5	11.2	7.6	11.6	7.9	12.5	7.9	13.3	7.7
	100	37.5	9.9	7.3	10.0	7.4	10.8	7.4	11.0	7.5	11.6	7.9	12.4	7.8	13.2	7.7
	104	40.0	9.7	7.2	9.9	7.4	10.7	7.4	10.9	7.4	11.4	7.8	12.3	7.8	13.1	7.7
	110	43.0	9.6	7.2	9.8	7.3	10.5	7.3	10.8	7.4	11.3	7.7	12.1	7.7	13.0	7.6
125 (14.0)	68	20.0	13.2	9.7	13.7	10.0	14.6	9.9	15.0	10.1	15.6	10.5	16.5	10.3	17.6	10.2
	73	22.5	13.2	9.7	13.5	9.9	14.4	9.9	14.8	10.0	15.4	10.4	16.5	10.3	17.4	10.2
	77	25.0	13.0	9.6	13.4	9.9	14.3	9.8	14.7	9.9	15.3	10.4	16.2	10.2	17.3	10.1
	82	27.5	12.9	9.5	13.2	9.8	14.1	9.7	14.6	9.9	15.1	10.3	16.1	10.2	16.8	9.9
	86	30.0	12.7	9.5	13.0	9.7	14.0	9.7	14.4	9.8	15.0	10.2	16.0	10.1	16.9	10.0
	91	32.5	12.6	9.4	12.9	9.6	13.7	9.6	14.1	9.7	14.8	10.2	15.8	10.1	16.8	9.9
	95	35.0	12.5	9.3	12.7	9.5	13.7	9.5	14.0	9.6	14.6	10.1	15.7	10.0	16.7	9.9
	100	37.5	12.3	9.3	12.6	9.5	13.4	9.4	13.8	9.5	14.5	10.0	15.5	9.9	16.5	9.8
	104	40.0	12.1	9.2	12.4	9.4	13.4	9.4	13.6	9.5	14.3	9.9	15.4	9.9	16.4	9.8
	110	43.0	12.0	9.1	12.3	9.3	13.2	9.3	13.4	9.4	14.1	9.9	15.1	9.8	16.2	9.7

kcal/h = kW x 860, Btu/h = kW x 3,412

CT

E4. Cooling capacity with PUHY-P700-800YSHM/PUHY-EP700-800YSHM PURY-P700-800YSHM

PLFY-P-VLMD-E

CA : Capacity(kW) SHC : Sensible Heat Capacity(kW)

Model size (Rated kW)	Outdoor air temp.		Indoor air temp.													
			71 ˚FDB / 59˚FWB		73˚FDB / 61˚FWB		77˚FDB / 64˚FWB		81˚FDB / 66˚FWB		82˚FDB / 68˚FWB		86˚FDB / 72˚FWB		90˚FDB / 75˚FWB	
			21.5˚CDB / 15˚CWB		23˚CDB / 16˚CWB		25˚CDB / 18˚CWB		27˚CDB / 19˚CWB		28˚CDB / 20˚CWB		30˚CDB / 22˚CWB		32˚CDB / 24˚CWB	
	˚FDB	˚CDB	CA	SHC	CA	SHC	CA	SHC	CA	SHC	CA	SHC	CA	SHC	CA	SHC
20 (2.2)	68	20.0	2.1	1.7	2.2	1.8	2.4	1.8	2.4	1.8	2.5	1.9	2.7	1.9	2.9	1.9
	73	22.5	2.1	1.7	2.2	1.8	2.3	1.8	2.4	1.8	2.5	1.9	2.7	1.9	2.8	1.9
	77	25.0	2.1	1.7	2.1	1.8	2.3	1.8	2.4	1.8	2.4	1.9	2.6	1.9	2.8	1.8
	82	27.5	2.0	1.7	2.1	1.8	2.2	1.7	2.3	1.8	2.4	1.9	2.6	1.9	2.7	1.8
	86	30.0	2.0	1.7	2.1	1.7	2.2	1.7	2.3	1.8	2.4	1.8	2.5	1.8	2.7	1.8
	91	32.5	1.9	1.7	2.0	1.7	2.2	1.7	2.2	1.8	2.3	1.8	2.5	1.8	2.6	1.8
	95	35.0	1.9	1.6	2.0	1.7	2.1	1.7	2.2	1.7	2.3	1.8	2.4	1.8	2.6	1.8
	100	37.5	1.9	1.6	2.0	1.7	2.1	1.7	2.2	1.7	2.2	1.8	2.4	1.8	2.5	1.8
	104	40.0	1.8	1.6	1.9	1.7	2.0	1.7	2.1	1.7	2.2	1.8	2.3	1.8	2.5	1.7
	110	43.0	1.8	1.6	1.8	1.6	2.0	1.6	2.1	1.7	2.1	1.8	2.3	1.7	2.4	1.7
25 (2.8)	68	20.0	2.7	2.0	2.8	2.1	3.0	2.1	3.1	2.1	3.2	2.2	3.4	2.2	3.7	2.2
	73	22.5	2.7	2.0	2.8	2.1	3.0	2.1	3.1	2.1	3.2	2.2	3.4	2.2	3.6	2.1
	77	25.0	2.6	2.0	2.7	2.0	2.9	2.0	3.0	2.1	3.1	2.2	3.3	2.1	3.5	2.1
	82	27.5	2.6	2.0	2.7	2.0	2.9	2.0	3.0	2.0	3.1	2.1	3.3	2.1	3.5	2.1
	86	30.0	2.5	1.9	2.6	2.0	2.8	2.0	2.9	2.0	3.0	2.1	3.2	2.1	3.4	2.1
	91	32.5	2.5	1.9	2.6	2.0	2.7	2.0	2.8	2.0	2.9	2.1	3.1	2.1	3.3	2.0
	95	35.0	2.4	1.9	2.5	2.0	2.7	1.9	2.8	2.0	2.9	2.1	3.1	2.0	3.3	2.0
	100	37.5	2.4	1.9	2.5	1.9	2.6	1.9	2.7	2.0	2.8	2.0	3.0	2.0	3.2	2.0
	104	40.0	2.4	1.8	2.4	1.9	2.6	1.9	2.7	1.9	2.8	2.0	3.0	2.0	3.2	2.0
	110	43.0	2.3	1.8	2.4	1.9	2.5	1.9	2.6	1.9	2.7	2.0	2.9	2.0	3.1	1.9
32 (3.6)	68	20.0	3.5	2.5	3.6	2.6	3.9	2.6	4.0	2.6	4.1	2.7	4.4	2.7	4.7	2.7
	73	22.5	3.4	2.5	3.5	2.6	3.8	2.6	3.9	2.6	4.1	2.7	4.4	2.7	4.6	2.6
	77	25.0	3.4	2.5	3.5	2.6	3.7	2.5	3.9	2.6	4.0	2.7	4.2	2.7	4.5	2.6
	82	27.5	3.3	2.4	3.4	2.5	3.7	2.5	3.8	2.6	3.9	2.7	4.2	2.6	4.5	2.6
	86	30.0	3.2	2.4	3.4	2.5	3.6	2.5	3.7	2.5	3.9	2.6	4.1	2.6	4.4	2.6
	91	32.5	3.2	2.4	3.3	2.5	3.5	2.4	3.7	2.5	3.8	2.6	4.0	2.6	4.3	2.5
	95	35.0	3.1	2.4	3.2	2.4	3.5	2.4	3.6	2.5	3.7	2.6	4.0	2.5	4.2	2.5
	100	37.5	3.1	2.3	3.2	2.4	3.4	2.4	3.5	2.4	3.7	2.5	3.9	2.5	4.1	2.5
	104	40.0	3.0	2.3	3.1	2.4	3.3	2.4	3.5	2.4	3.6	2.5	3.8	2.5	4.1	2.4
	110	43.0	3.0	2.3	3.0	2.3	3.2	2.3	3.4	2.4	3.5	2.5	3.7	2.4	4.0	2.4
40 (4.5)	68	20.0	4.3	3.0	4.5	3.1	4.8	3.1	5.0	3.1	5.2	3.2	5.5	3.2	5.9	3.1
	73	22.5	4.3	2.9	4.4	3.0	4.7	3.0	4.9	3.0	5.1	3.2	5.4	3.1	5.8	3.1
	77	25.0	4.2	2.9	4.4	3.0	4.7	3.0	4.8	3.0	5.0	3.1	5.3	3.1	5.7	3.0
	82	27.5	4.1	2.9	4.3	2.9	4.6	2.9	4.7	3.0	4.9	3.1	5.2	3.0	5.6	3.0
	86	30.0	4.1	2.8	4.2	2.9	4.5	2.9	4.7	2.9	4.8	3.0	5.1	3.0	5.5	3.0
	91	32.5	4.0	2.8	4.1	2.9	4.4	2.8	4.6	2.9	4.7	3.0	5.0	3.0	5.4	2.9
	95	35.0	3.9	2.7	4.1	2.8	4.3	2.8	4.5	2.8	4.6	2.9	5.0	2.9	5.3	2.9
	100	37.5	3.8	2.7	4.0	2.8	4.3	2.8	4.4	2.8	4.6	2.9	4.9	2.9	5.2	2.8
	104	40.0	3.8	2.7	3.9	2.7	4.2	2.7	4.3	2.8	4.5	2.9	4.8	2.8	5.1	2.8
	110	43.0	3.7	2.6	3.8	2.7	4.1	2.7	4.2	2.7	4.4	2.8	4.7	2.8	5.0	2.8
50 (5.6)	68	20.0	5.4	3.7	5.6	3.8	6.0	3.9	6.2	3.9	6.4	4.0	6.9	4.0	7.3	3.9
	73	22.5	5.3	3.7	5.5	3.8	5.9	3.8	6.1	3.8	6.3	4.0	6.8	4.0	7.2	3.9
	77	25.0	5.3	3.7	5.4	3.8	5.8	3.8	6.0	3.8	6.2	3.9	6.6	3.9	7.1	3.8
	82	27.5	5.2	3.6	5.3	3.7	5.7	3.7	5.9	3.7	6.1	3.9	6.5	3.8	6.9	3.8
	86	30.0	5.0	3.5	5.2	3.7	5.6	3.6	5.8	3.7	6.0	3.8	6.4	3.8	6.8	3.8
	91	32.5	5.0	3.5	5.1	3.6	5.5	3.6	5.7	3.6	5.9	3.8	6.3	3.7	6.7	3.7
	95	35.0	4.9	3.5	5.0	3.6	5.4	3.5	5.6	3.6	5.8	3.7	6.2	3.7	6.6	3.6
	100	37.5	4.8	3.4	5.0	3.5	5.3	3.5	5.5	3.5	5.7	3.7	6.0	3.6	6.4	3.6
	104	40.0	4.7	3.4	4.8	3.4	5.2	3.4	5.4	3.5	5.6	3.6	5.9	3.6	6.3	3.5
	110	43.0	4.6	3.3	4.7	3.4	5.0	3.4	5.2	3.4	5.4	3.6	5.8	3.5	6.2	3.5
63 (7.1)	68	20.0	6.9	4.8	7.1	5.0	7.6	5.0	7.9	5.0	8.2	5.2	8.7	5.2	9.3	5.1
	73	22.5	6.7	4.8	7.0	4.9	7.5	4.9	7.8	5.0	8.0	5.2	8.6	5.1	9.1	5.0
	77	25.0	6.7	4.7	6.9	4.9	7.4	4.9	7.6	4.9	7.9	5.1	8.4	5.0	8.9	5.0
	82	27.5	6.5	4.7	6.7	4.8	7.2	4.8	7.5	4.8	7.7	5.0	8.3	5.0	8.8	4.9
	86	30.0	6.4	4.6	6.6	4.7	7.1	4.7	7.3	4.8	7.6	5.0	8.1	4.9	8.7	4.9
	91	32.5	6.3	4.5	6.5	4.7	7.0	4.7	7.2	4.7	7.5	4.9	8.0	4.9	8.5	4.8
	95	35.0	6.2	4.5	6.4	4.6	6.8	4.6	7.1	4.7	7.3	4.8	7.8	4.8	8.3	4.7
	100	37.5	6.1	4.4	6.3	4.6	6.7	4.5	7.0	4.6	7.2	4.8	7.7	4.7	8.2	4.7
	104	40.0	6.0	4.4	6.1	4.5	6.6	4.5	6.8	4.5	7.1	4.7	7.5	4.7	8.0	4.6
	110	43.0	5.8	4.3	6.0	4.4	6.4	4.4	6.6	4.5	6.9	4.7	7.3	4.6	7.8	4.6

kcal/h = kW x 860, Btu/h = kW x 3,412

E4. Cooling capacity with PUHY-P700-800YSHM/PUHY-EP700-800YSHM PURY-P700-800YSHM

PLFY-P-VLMD-E

CA : Capacity(kW) SHC : Sensible Heat Capacity(kW)

Model size (Rated kW)	Outdoor air temp.		Indoor air temp.													
			71 ˚FDB / 59˚FWB		73˚FDB / 61˚FWB		77˚FDB / 64˚FWB		81˚FDB / 66˚FWB		82˚FDB / 68˚FWB		86˚FDB / 72˚FWB		90˚FDB / 75˚FWB	
			21.5˚CDB / 15˚CWB		23˚CDB / 16˚CWB		25˚CDB / 18˚CWB		27˚CDB / 19˚CWB		28˚CDB / 20˚CWB		30˚CDB / 22˚CWB		32˚CDB / 24˚CWB	
	˚FDB	˚CDB	CA	SHC	CA	SHC	CA	SHC	CA	SHC	CA	SHC	CA	SHC	CA	SHC
80 (9.0)	68	20.0	8.7	6.1	9.0	6.3	9.7	6.3	10.0	6.4	10.4	6.6	11.1	6.6	11.7	6.5
	73	22.5	8.6	6.1	8.9	6.2	9.5	6.2	9.8	6.3	10.2	6.5	10.9	6.5	11.5	6.4
	77	25.0	8.5	6.0	8.7	6.2	9.4	6.2	9.7	6.2	10.0	6.5	10.6	6.4	11.3	6.3
	82	27.5	8.3	5.9	8.6	6.1	9.2	6.1	9.5	6.1	9.8	6.4	10.5	6.3	11.2	6.2
	86	30.0	8.1	5.8	8.4	6.0	9.0	6.0	9.3	6.1	9.6	6.3	10.3	6.2	11.0	6.2
	91	32.5	8.0	5.7	8.2	5.9	8.8	5.9	9.1	6.0	9.5	6.2	10.1	6.2	10.8	6.1
	95	35.0	7.8	5.7	8.1	5.8	8.6	5.8	9.0	5.9	9.3	6.1	9.9	6.1	10.5	6.0
	100	37.5	7.7	5.6	8.0	5.8	8.5	5.7	8.8	5.8	9.1	6.1	9.7	6.0	10.4	5.9
	104	40.0	7.6	5.5	7.7	5.7	8.3	5.7	8.6	5.8	9.0	6.0	9.5	5.9	10.1	5.8
	110	43.0	7.4	5.5	7.6	5.6	8.1	5.6	8.4	5.7	8.7	5.9	9.3	5.8	9.9	5.8
100 (11.2)	68	20.0	10.8	7.8	11.2	8.0	12.0	8.0	12.5	8.1	12.9	8.4	13.8	8.3	14.6	8.2
	73	22.5	10.6	7.7	11.0	7.9	11.8	7.9	12.2	8.0	12.7	8.3	13.6	8.3	14.3	8.1
	77	25.0	10.5	7.6	10.9	7.8	11.6	7.8	12.0	7.9	12.4	8.2	13.2	8.1	14.1	8.0
	82	27.5	10.3	7.5	10.6	7.7	11.4	7.7	11.8	7.8	12.2	8.1	13.0	8.1	13.9	7.9
	86	30.0	10.1	7.4	10.5	7.6	11.2	7.6	11.6	7.7	12.0	8.0	12.8	7.9	13.7	7.9
	91	32.5	9.9	7.3	10.2	7.5	11.0	7.5	11.4	7.6	11.8	7.9	12.5	7.9	13.4	7.8
	95	35.0	9.7	7.2	10.1	7.4	10.8	7.4	11.2	7.6	11.5	7.8	12.3	7.8	13.1	7.7
	100	37.5	9.6	7.1	10.0	7.4	10.6	7.3	11.0	7.5	11.4	7.8	12.1	7.7	12.9	7.6
	104	40.0	9.4	7.1	9.6	7.2	10.4	7.2	10.8	7.4	11.1	7.7	11.9	7.6	12.6	7.5
	110	43.0	9.2	6.9	9.4	7.1	10.1	7.1	10.5	7.2	10.9	7.5	11.6	7.5	12.3	7.4
125 (14.0)	68	20.0	13.5	9.9	14.0	10.2	15.1	10.2	15.6	10.3	16.1	10.7	17.2	10.6	18.3	10.5
	73	22.5	13.3	9.8	13.8	10.1	14.8	10.0	15.3	10.2	15.8	10.6	16.9	10.5	17.9	10.3
	77	25.0	13.2	9.7	13.6	10.0	14.6	9.9	15.1	10.1	15.5	10.5	16.5	10.3	17.6	10.2
	82	27.5	12.9	9.5	13.3	9.8	14.3	9.8	14.8	10.0	15.3	10.4	16.3	10.3	17.4	10.1
	86	30.0	12.6	9.4	13.1	9.7	14.0	9.7	14.5	9.8	15.0	10.2	16.0	10.1	17.1	10.0
	91	32.5	12.4	9.3	12.8	9.6	13.7	9.6	14.2	9.7	14.7	10.1	15.7	10.0	16.7	9.9
	95	35.0	12.2	9.2	12.6	9.5	13.4	9.4	14.0	9.6	14.4	10.0	15.4	9.9	16.4	9.8
	100	37.5	12.0	9.1	12.5	9.4	13.2	9.3	13.7	9.5	14.2	9.9	15.1	9.8	16.1	9.7
	104	40.0	11.8	9.0	12.0	9.2	13.0	9.2	13.4	9.4	13.9	9.8	14.8	9.7	15.8	9.5
	110	43.0	11.5	8.9	11.8	9.1	12.6	9.1	13.1	9.3	13.6	9.6	14.5	9.6	15.4	9.4

kcal/h = kW x 860, Btu/h = kW x 3,412

CT

E5. Cooling capacity with PUHY-P850-1250YSHM/PUHY-EP850-900YSHM

PLFY-P-VLMD-E

CA : Capacity(kW) SHC : Sensible Heat Capacity(kW)

Model size (Rated kW)	Outdoor air temp.		Indoor air temp.													
			71 ˚FDB / 59˚FWB		73˚FDB / 61˚FWB		77˚FDB / 64˚FWB		81˚FDB / 66˚FWB		82˚FDB / 68˚FWB		86˚FDB / 72˚FWB		90˚FDB / 75˚FWB	
			21.5˚CDB / 15˚CWB		23˚CDB / 16˚CWB		25˚CDB / 18˚CWB		27˚CDB / 19˚CWB		28˚CDB / 20˚CWB		30˚CDB / 22˚CWB		32˚CDB / 24˚CWB	
	˚FDB	˚CDB	CA	SHC	CA	SHC	CA	SHC	CA	SHC	CA	SHC	CA	SHC	CA	SHC
20 (2.2)	68	20.0	2.1	1.9	2.1	1.9	2.3	1.9	2.4	2.1	2.4	2.1	2.6	2.0	2.8	2.0
	73	22.5	2.1	1.9	2.1	1.9	2.3	1.9	2.3	2.1	2.4	2.0	2.6	2.0	2.7	2.0
	77	25.0	2.0	1.8	2.1	1.9	2.2	1.9	2.3	2.0	2.4	2.0	2.6	2.0	2.7	2.0
	82	27.5	2.0	1.8	2.1	1.9	2.2	1.9	2.3	2.0	2.4	2.0	2.5	2.0	2.7	2.0
	86	30.0	2.0	1.8	2.0	1.9	2.2	1.9	2.3	2.0	2.3	2.0	2.5	2.0	2.7	2.0
	91	32.5	2.0	1.8	2.0	1.9	2.2	1.9	2.2	2.0	2.3	2.0	2.5	2.0	2.6	2.0
	95	35.0	1.9	1.8	2.0	1.9	2.1	1.9	2.2	2.0	2.3	2.0	2.5	2.0	2.6	2.0
	100	37.5	1.9	1.8	2.0	1.9	2.1	1.8	2.2	2.0	2.3	2.0	2.4	2.0	2.6	2.0
	104	40.0	1.9	1.8	1.9	1.8	2.1	1.8	2.2	2.0	2.2	2.0	2.4	2.0	2.6	1.9
	110	43.0	1.9	1.8	1.9	1.8	2.1	1.8	2.1	2.0	2.2	2.0	2.4	2.0	2.5	1.9
25 (2.8)	68	20.0	2.6	2.1	2.7	2.2	2.9	2.2	3.0	2.3	3.1	2.3	3.3	2.3	3.5	2.3
	73	22.5	2.6	2.1	2.7	2.2	2.9	2.2	3.0	2.3	3.1	2.3	3.3	2.3	3.5	2.2
	77	25.0	2.6	2.1	2.7	2.2	2.9	2.2	2.9	2.3	3.0	2.3	3.2	2.3	3.4	2.2
	82	27.5	2.6	2.1	2.6	2.1	2.8	2.1	2.9	2.3	3.0	2.3	3.2	2.3	3.4	2.2
	86	30.0	2.5	2.1	2.6	2.1	2.8	2.1	2.9	2.3	3.0	2.3	3.2	2.2	3.4	2.2
	91	32.5	2.5	2.1	2.6	2.1	2.7	2.1	2.8	2.3	2.9	2.3	3.2	2.2	3.4	2.2
	95	35.0	2.5	2.0	2.5	2.1	2.7	2.1	2.8	2.2	2.9	2.2	3.1	2.2	3.3	2.2
	100	37.5	2.5	2.0	2.5	2.1	2.7	2.1	2.8	2.2	2.9	2.2	3.1	2.2	3.3	2.2
	104	40.0	2.4	2.0	2.5	2.1	2.6	2.1	2.7	2.2	2.9	2.2	3.1	2.2	3.3	2.2
	110	43.0	2.4	2.0	2.4	2.1	2.6	2.1	2.7	2.2	2.8	2.2	3.0	2.2	3.2	2.2
32 (3.6)	68	20.0	3.4	2.5	3.5	2.6	3.7	2.6	3.9	2.8	4.0	2.7	4.2	2.7	4.5	2.7
	73	22.5	3.4	2.5	3.5	2.6	3.7	2.6	3.8	2.7	4.0	2.7	4.2	2.7	4.5	2.7
	77	25.0	3.3	2.5	3.4	2.6	3.7	2.6	3.8	2.7	3.9	2.7	4.2	2.7	4.4	2.6
	82	27.5	3.3	2.5	3.4	2.6	3.6	2.5	3.7	2.7	3.9	2.7	4.1	2.7	4.4	2.6
	86	30.0	3.3	2.5	3.3	2.5	3.6	2.5	3.7	2.7	3.8	2.7	4.1	2.7	4.3	2.6
	91	32.5	3.2	2.5	3.3	2.5	3.5	2.5	3.7	2.7	3.8	2.7	4.1	2.6	4.3	2.6
	95	35.0	3.2	2.4	3.3	2.5	3.5	2.5	3.6	2.7	3.8	2.6	4.0	2.6	4.3	2.6
	100	37.5	3.2	2.4	3.2	2.5	3.4	2.5	3.6	2.6	3.7	2.6	4.0	2.6	4.2	2.6
	104	40.0	3.1	2.4	3.2	2.5	3.4	2.5	3.5	2.6	3.7	2.6	3.9	2.6	4.2	2.6
	110	43.0	3.1	2.4	3.1	2.4	3.4	2.4	3.5	2.6	3.6	2.6	3.9	2.6	4.2	2.5
40 (4.5)	68	20.0	4.3	3.0	4.4	3.0	4.7	3.0	4.8	3.2	5.0	3.2	5.3	3.1	5.6	3.1
	73	22.5	4.2	3.0	4.3	3.0	4.6	3.0	4.8	3.2	4.9	3.2	5.3	3.1	5.6	3.1
	77	25.0	4.2	2.9	4.3	3.0	4.6	3.0	4.7	3.1	4.9	3.1	5.2	3.1	5.5	3.1
	82	27.5	4.1	2.9	4.2	3.0	4.5	3.0	4.7	3.1	4.8	3.1	5.2	3.1	5.5	3.0
	86	30.0	4.1	2.9	4.2	2.9	4.5	2.9	4.6	3.1	4.8	3.1	5.1	3.1	5.4	3.0
	91	32.5	4.0	2.9	4.1	2.9	4.4	2.9	4.6	3.1	4.7	3.1	5.1	3.0	5.4	3.0
	95	35.0	4.0	2.8	4.1	2.9	4.4	2.9	4.5	3.0	4.7	3.0	5.0	3.0	5.3	3.0
	100	37.5	3.9	2.8	4.0	2.9	4.3	2.9	4.5	3.0	4.6	3.0	5.0	3.0	5.3	3.0
	104	40.0	3.9	2.8	4.0	2.8	4.3	2.8	4.4	3.0	4.6	3.0	4.9	3.0	5.2	2.9
	110	43.0	3.8	2.8	3.9	2.8	4.2	2.8	4.4	3.0	4.5	3.0	4.9	3.0	5.2	2.9
50 (5.6)	68	20.0	5.3	3.8	5.4	3.9	5.8	3.9	6.0	4.1	6.2	4.1	6.6	4.0	7.0	4.0
	73	22.5	5.2	3.8	5.4	3.9	5.8	3.8	5.9	4.1	6.1	4.0	6.6	4.0	7.0	3.9
	77	25.0	5.2	3.7	5.3	3.8	5.7	3.8	5.9	4.0	6.1	4.0	6.5	4.0	6.9	3.9
	82	27.5	5.1	3.7	5.3	3.8	5.6	3.8	5.8	4.0	6.0	4.0	6.4	4.0	6.8	3.9
	86	30.0	5.1	3.7	5.2	3.8	5.6	3.8	5.8	4.0	5.9	4.0	6.4	3.9	6.7	3.9
	91	32.5	5.0	3.7	5.1	3.7	5.5	3.7	5.7	3.9	5.9	3.9	6.3	3.9	6.7	3.9
	95	35.0	5.0	3.6	5.1	3.7	5.4	3.7	5.6	3.9	5.8	3.9	6.3	3.9	6.7	3.8
	100	37.5	4.9	3.6	5.0	3.7	5.4	3.7	5.6	3.9	5.8	3.9	6.2	3.9	6.6	3.8
	104	40.0	4.8	3.6	4.9	3.6	5.3	3.6	5.5	3.9	5.7	3.9	6.1	3.8	6.5	3.8
	110	43.0	4.8	3.5	4.9	3.6	5.2	3.6	5.4	3.8	5.6	3.8	6.0	3.8	6.5	3.8
63 (7.1)	68	20.0	6.7	4.7	6.9	4.8	7.4	4.8	7.6	5.0	7.9	5.0	8.4	5.0	8.9	4.9
	73	22.5	6.6	4.7	6.8	4.8	7.3	4.8	7.5	5.0	7.8	5.0	8.3	4.9	8.8	4.9
	77	25.0	6.6	4.6	6.7	4.7	7.2	4.7	7.5	5.0	7.7	5.0	8.2	4.9	8.7	4.8
	82	27.5	6.5	4.6	6.7	4.7	7.1	4.7	7.4	4.9	7.6	4.9	8.2	4.9	8.7	4.8
	86	30.0	6.4	4.6	6.6	4.7	7.1	4.6	7.3	4.9	7.5	4.9	8.1	4.9	8.6	4.8
	91	32.5	6.4	4.5	6.5	4.6	7.0	4.6	7.2	4.9	7.5	4.9	8.0	4.8	8.5	4.8
	95	35.0	6.3	4.5	6.4	4.6	6.9	4.6	7.1	4.8	7.4	4.8	7.9	4.8	8.4	4.7
	100	37.5	6.2	4.5	6.3	4.5	6.8	4.5	7.0	4.8	7.3	4.8	7.8	4.8	8.4	4.7
	104	40.0	6.1	4.4	6.2	4.5	6.7	4.5	7.0	4.7	7.2	4.8	7.8	4.7	8.3	4.7
	110	43.0	6.1	4.4	6.2	4.5	6.6	4.4	6.9	4.7	7.2	4.7	7.7	4.7	8.2	4.6

kcal/h = kW x 860, Btu/h = kW x 3,412

E5. Cooling capacity with PUHY-P850-1250YSHM/PUHY-EP850-900YSHM

PLFY-P-VLMD-E

CA : Capacity(kW) SHC : Sensible Heat Capacity(kW)

Model size (Rated kW)	Outdoor air temp.		Indoor air temp.													
			71 ˚FDB / 59˚FWB		73˚FDB / 61˚FWB		77˚FDB / 64˚FWB		81˚FDB / 66˚FWB		82˚FDB / 68˚FWB		86˚FDB / 72˚FWB		90˚FDB / 75˚FWB	
			21.5˚CDB / 15˚CWB		23˚CDB / 16˚CWB		25˚CDB / 18˚CWB		27˚CDB / 19˚CWB		28˚CDB / 20˚CWB		30˚CDB / 22˚CWB		32˚CDB / 24˚CWB	
	˚FDB	˚CDB	CA	SHC	CA	SHC	CA	SHC	CA	SHC	CA	SHC	CA	SHC	CA	SHC
80 (9.0)	68	20.0	8.5	6.2	8.7	6.4	9.4	6.4	9.6	6.7	10.0	6.7	10.6	6.6	11.3	6.5
	73	22.5	8.4	6.2	8.6	6.3	9.3	6.3	9.6	6.7	9.9	6.7	10.5	6.6	11.2	6.5
	77	25.0	8.3	6.1	8.5	6.3	9.2	6.3	9.5	6.6	9.8	6.6	10.4	6.6	11.1	6.5
	82	27.5	8.2	6.1	8.4	6.2	9.0	6.2	9.4	6.6	9.7	6.6	10.4	6.5	11.0	6.4
	86	30.0	8.1	6.0	8.3	6.2	8.9	6.2	9.3	6.5	9.6	6.5	10.2	6.5	10.8	6.4
	91	32.5	8.1	6.0	8.2	6.1	8.8	6.1	9.2	6.5	9.5	6.5	10.1	6.4	10.8	6.4
	95	35.0	8.0	6.0	8.1	6.1	8.7	6.1	9.0	6.5	9.4	6.4	10.1	6.4	10.7	6.3
	100	37.5	7.9	5.9	8.0	6.0	8.6	6.0	8.9	6.4	9.3	6.4	9.9	6.4	10.6	6.3
	104	40.0	7.8	5.9	7.9	6.0	8.5	6.0	8.8	6.4	9.2	6.4	9.8	6.3	10.5	6.2
	110	43.0	7.7	5.8	7.8	5.9	8.4	5.9	8.7	6.3	9.1	6.3	9.7	6.3	10.4	6.2
100 (11.2)	68	20.0	10.6	7.7	10.9	7.8	11.6	7.8	12.0	8.2	12.4	8.2	13.2	8.1	14.0	8.0
	73	22.5	10.5	7.6	10.8	7.8	11.5	7.7	11.9	8.2	12.3	8.2	13.1	8.1	13.9	8.0
	77	25.0	10.4	7.5	10.6	7.7	11.4	7.7	11.8	8.1	12.2	8.1	13.0	8.0	13.8	7.9
	82	27.5	10.2	7.5	10.5	7.7	11.2	7.6	11.6	8.1	12.0	8.0	12.9	8.0	13.7	7.9
	86	30.0	10.1	7.4	10.4	7.6	11.1	7.6	11.5	8.0	11.9	8.0	12.7	7.9	13.5	7.8
	91	32.5	10.0	7.4	10.2	7.5	11.0	7.5	11.4	8.0	11.8	7.9	12.6	7.9	13.4	7.8
	95	35.0	9.9	7.3	10.1	7.5	10.9	7.5	11.2	7.9	11.7	7.9	12.5	7.8	13.3	7.7
	100	37.5	9.8	7.3	10.0	7.4	10.7	7.4	11.1	7.8	11.6	7.8	12.4	7.8	13.2	7.7
	104	40.0	9.7	7.2	9.9	7.3	10.6	7.3	11.0	7.8	11.4	7.8	12.2	7.7	13.0	7.6
	110	43.0	9.6	7.1	9.7	7.3	10.4	7.3	10.8	7.7	11.3	7.7	12.1	7.7	12.9	7.6
125 (14.0)	68	20.0	13.2	9.7	13.6	10.0	14.6	9.9	15.0	10.5	15.5	10.5	16.5	10.3	17.5	10.2
	73	22.5	13.1	9.7	13.4	9.9	14.4	9.9	14.9	10.4	15.4	10.4	16.4	10.3	17.4	10.1
	77	25.0	13.0	9.6	13.3	9.8	14.3	9.8	14.7	10.4	15.2	10.3	16.2	10.2	17.2	10.1
	82	27.5	12.8	9.5	13.1	9.7	14.0	9.7	14.6	10.3	15.1	10.3	16.1	10.2	17.1	10.0
	86	30.0	12.7	9.4	13.0	9.7	13.9	9.6	14.4	10.2	14.9	10.2	15.9	10.1	16.9	10.0
	91	32.5	12.5	9.4	12.8	9.6	13.7	9.6	14.2	10.2	14.7	10.1	15.8	10.1	16.8	9.9
	95	35.0	12.4	9.3	12.6	9.5	13.6	9.5	14.0	10.1	14.6	10.1	15.7	10.0	16.6	9.9
	100	37.5	12.3	9.2	12.5	9.4	13.4	9.4	13.9	10.0	14.4	10.0	15.5	9.9	16.5	9.8
	104	40.0	12.1	9.2	12.3	9.4	13.2	9.3	13.7	9.9	14.3	9.9	15.3	9.9	16.3	9.7
	110	43.0	12.0	9.1	12.2	9.3	13.1	9.3	13.6	9.9	14.1	9.9	15.1	9.8	16.1	9.7

kcal/h = kW x 860, Btu/h = kW x 3,412

CT

E6. Cooling capacity with PUHY-HP200-500Y(S)HM

PLFY-P-VLMD-E

CA : Capacity(kW) SHC : Sensible Heat Capacity(kW)

Model size (Rated kW)	Outdoor air temp.		Indoor air temp.													
			71 ˚FDB / 59˚FWB		73˚FDB / 61˚FWB		77˚FDB / 64˚FWB		81˚FDB / 66˚FWB		82˚FDB / 68˚FWB		86˚FDB / 72˚FWB		90˚FDB / 75˚FWB	
			21.5˚CDB / 15˚CWB		23˚CDB / 16˚CWB		25˚CDB / 18˚CWB		27˚CDB / 19˚CWB		28˚CDB / 20˚CWB		30˚CDB / 22˚CWB		32˚CDB / 24˚CWB	
	˚FDB	˚CDB	CA	SHC	CA	SHC	CA	SHC	CA	SHC	CA	SHC	CA	SHC	CA	SHC
20 (2.2)	68	20.0	1.9	1.8	2.1	1.9	2.2	1.9	2.4	2.1	2.4	2.1	2.6	2.0	2.7	2.0
	73	22.5	1.9	1.8	2.1	1.9	2.2	1.9	2.4	2.1	2.4	2.1	2.6	2.0	2.7	2.0
	77	25.0	1.9	1.8	2.1	1.9	2.2	1.9	2.4	2.1	2.4	2.1	2.6	2.0	2.7	2.0
	82	27.5	1.9	1.8	2.1	1.9	2.2	1.9	2.3	2.0	2.4	2.0	2.5	2.0	2.6	2.0
	86	30.0	1.9	1.8	2.0	1.9	2.2	1.9	2.3	2.0	2.4	2.0	2.5	2.0	2.6	2.0
	91	32.5	1.9	1.8	2.0	1.9	2.1	1.9	2.2	2.0	2.3	2.0	2.4	2.0	2.5	1.9
	95	35.0	1.9	1.8	2.0	1.9	2.1	1.8	2.2	2.0	2.3	2.0	2.4	2.0	2.5	1.9
	100	37.5	1.9	1.8	2.0	1.9	2.1	1.8	2.2	2.0	2.2	2.0	2.3	1.9	2.4	1.9
	104	40.0	1.9	1.8	1.9	1.8	2.0	1.8	2.1	2.0	2.2	2.0	2.3	1.9	2.4	1.9
	110	43.0	1.9	1.8	1.9	1.8	2.0	1.8	2.1	2.0	2.1	1.9	2.2	1.9	2.3	1.9
25 (2.8)	68	20.0	2.5	2.0	2.7	2.2	2.8	2.1	3.0	2.3	3.1	2.3	3.3	2.3	3.5	2.2
	73	22.5	2.5	2.0	2.7	2.2	2.8	2.1	3.0	2.3	3.1	2.3	3.3	2.3	3.5	2.2
	77	25.0	2.5	2.0	2.7	2.2	2.8	2.1	3.0	2.3	3.1	2.3	3.3	2.3	3.4	2.2
	82	27.5	2.5	2.0	2.6	2.1	2.8	2.1	2.9	2.3	3.0	2.3	3.2	2.3	3.4	2.2
	86	30.0	2.4	2.0	2.6	2.1	2.8	2.1	2.9	2.3	3.0	2.3	3.1	2.2	3.3	2.2
	91	32.5	2.4	2.0	2.6	2.1	2.7	2.1	2.8	2.3	2.9	2.2	3.1	2.2	3.2	2.2
	95	35.0	2.4	2.0	2.5	2.1	2.7	2.1	2.8	2.2	2.9	2.2	3.0	2.2	3.2	2.1
	100	37.5	2.4	2.0	2.5	2.1	2.6	2.1	2.8	2.2	2.8	2.2	3.0	2.2	3.1	2.1
	104	40.0	2.4	2.0	2.5	2.1	2.6	2.0	2.7	2.2	2.8	2.2	2.9	2.1	3.0	2.1
	110	43.0	2.4	2.0	2.4	2.1	2.6	2.0	2.7	2.2	2.7	2.2	2.8	2.1	2.9	2.1
32 (3.6)	68	20.0	3.2	2.4	3.4	2.6	3.6	2.6	3.9	2.8	4.0	2.8	4.2	2.7	4.5	2.7
	73	22.5	3.2	2.4	3.4	2.6	3.6	2.6	3.9	2.8	4.0	2.8	4.2	2.7	4.5	2.7
	77	25.0	3.2	2.4	3.4	2.6	3.6	2.6	3.8	2.7	4.0	2.7	4.2	2.7	4.4	2.6
	82	27.5	3.2	2.4	3.4	2.6	3.6	2.5	3.8	2.7	3.9	2.7	4.1	2.7	4.3	2.6
	86	30.0	3.1	2.4	3.3	2.5	3.5	2.5	3.7	2.7	3.8	2.7	4.0	2.6	4.2	2.6
	91	32.5	3.1	2.4	3.3	2.5	3.5	2.5	3.7	2.7	3.8	2.7	4.0	2.6	4.1	2.5
	95	35.0	3.1	2.4	3.3	2.5	3.4	2.5	3.6	2.6	3.7	2.6	3.9	2.6	4.1	2.5
	100	37.5	3.1	2.4	3.2	2.5	3.4	2.4	3.5	2.6	3.6	2.6	3.8	2.5	4.0	2.5
	104	40.0	3.1	2.4	3.2	2.5	3.3	2.4	3.5	2.6	3.6	2.6	3.7	2.5	3.9	2.5
	110	43.0	3.0	2.4	3.1	2.4	3.3	2.4	3.4	2.6	3.5	2.5	3.6	2.5	3.8	2.4
40 (4.5)	68	20.0	4.0	2.8	4.3	3.0	4.5	3.0	4.8	3.2	5.0	3.2	5.3	3.1	5.6	3.1
	73	22.5	4.0	2.8	4.3	3.0	4.5	3.0	4.8	3.2	5.0	3.2	5.3	3.1	5.6	3.1
	77	25.0	4.0	2.8	4.3	3.0	4.5	3.0	4.8	3.2	5.0	3.2	5.3	3.1	5.5	3.1
	82	27.5	4.0	2.8	4.2	3.0	4.5	2.9	4.7	3.1	4.9	3.1	5.1	3.1	5.4	3.0
	86	30.0	3.9	2.8	4.2	3.0	4.4	2.9	4.7	3.1	4.8	3.1	5.1	3.0	5.3	3.0
	91	32.5	3.9	2.8	4.1	2.9	4.4	2.9	4.6	3.1	4.7	3.1	5.0	3.0	5.2	2.9
	95	35.0	3.9	2.8	4.1	2.9	4.3	2.9	4.5	3.0	4.6	3.0	4.9	3.0	5.1	2.9
	100	37.5	3.9	2.8	4.0	2.9	4.2	2.8	4.4	3.0	4.5	3.0	4.8	2.9	5.0	2.8
	104	40.0	3.8	2.8	4.0	2.9	4.2	2.8	4.4	3.0	4.5	3.0	4.7	2.9	4.9	2.8
	110	43.0	3.8	2.7	3.9	2.8	4.1	2.8	4.3	2.9	4.4	2.9	4.5	2.8	4.7	2.8
50 (5.6)	68	20.0	4.9	3.6	5.3	3.8	5.6	3.8	6.0	4.1	6.2	4.1	6.6	4.0	7.0	4.0
	73	22.5	4.9	3.6	5.3	3.8	5.6	3.8	6.0	4.1	6.2	4.1	6.6	4.0	7.0	4.0
	77	25.0	4.9	3.6	5.3	3.8	5.6	3.8	6.0	4.1	6.2	4.1	6.5	4.0	6.9	3.9
	82	27.5	4.9	3.6	5.3	3.8	5.6	3.8	5.9	4.0	6.1	4.0	6.4	3.9	6.7	3.9
	86	30.0	4.9	3.6	5.2	3.8	5.5	3.7	5.8	4.0	6.0	4.0	6.3	3.9	6.6	3.8
	91	32.5	4.9	3.6	5.1	3.7	5.4	3.7	5.7	3.9	5.9	3.9	6.2	3.8	6.4	3.8
	95	35.0	4.8	3.6	5.1	3.7	5.4	3.7	5.6	3.9	5.8	3.9	6.1	3.8	6.3	3.7
	100	37.5	4.8	3.6	5.0	3.7	5.3	3.6	5.5	3.9	5.7	3.8	5.9	3.8	6.2	3.7
	104	40.0	4.8	3.5	5.0	3.7	5.2	3.6	5.4	3.8	5.6	3.8	5.8	3.7	6.1	3.6
	110	43.0	4.7	3.5	4.9	3.6	5.1	3.5	5.3	3.8	5.4	3.7	5.7	3.7	5.9	3.6
63 (7.1)	68	20.0	6.3	4.5	6.7	4.7	7.2	4.7	7.6	5.0	7.9	5.0	8.4	5.0	8.8	4.9
	73	22.5	6.3	4.5	6.7	4.7	7.2	4.7	7.6	5.0	7.9	5.0	8.4	5.0	8.8	4.9
	77	25.0	6.3	4.5	6.7	4.7	7.2	4.7	7.6	5.0	7.8	5.0	8.3	4.9	8.7	4.8
	82	27.5	6.2	4.5	6.7	4.7	7.1	4.7	7.5	5.0	7.7	5.0	8.1	4.9	8.5	4.8
	86	30.0	6.2	4.5	6.6	4.7	7.0	4.6	7.4	4.9	7.6	4.9	8.0	4.8	8.4	4.7
	91	32.5	6.2	4.4	6.5	4.6	6.9	4.6	7.2	4.9	7.4	4.8	7.8	4.7	8.2	4.6
	95	35.0	6.1	4.4	6.4	4.6	6.8	4.5	7.1	4.8	7.3	4.8	7.7	4.7	8.0	4.6
	100	37.5	6.1	4.4	6.4	4.5	6.7	4.5	7.0	4.8	7.2	4.7	7.5	4.6	7.8	4.5
	104	40.0	6.1	4.4	6.3	4.5	6.6	4.4	6.9	4.7	7.1	4.7	7.4	4.6	7.7	4.4
	110	43.0	6.0	4.4	6.2	4.5	6.5	4.4	6.7	4.6	6.9	4.6	7.2	4.5	7.5	4.4

kcal/h = kW x 860, Btu/h = kW x 3,412

E6. Cooling capacity with PUHY-HP200-500Y(S)HM

PLFY-P-VLMD-E

CA : Capacity(kW) SHC : Sensible Heat Capacity(kW)

Model size (Rated kW)	Outdoor air temp.		Indoor air temp.													
			71 ˚FDB / 59˚FWB		73˚FDB / 61˚FWB		77˚FDB / 64˚FWB		81˚FDB / 66˚FWB		82˚FDB / 68˚FWB		86˚FDB / 72˚FWB		90˚FDB / 75˚FWB	
			21.5˚CDB / 15˚CWB		23˚CDB / 16˚CWB		25˚CDB / 18˚CWB		27˚CDB / 19˚CWB		28˚CDB / 20˚CWB		30˚CDB / 22˚CWB		32˚CDB / 24˚CWB	
	˚FDB	˚CDB	CA	SHC	CA	SHC	CA	SHC	CA	SHC	CA	SHC	CA	SHC	CA	SHC
80 (9.0)	68	20.0	7.9	5.9	8.5	6.3	9.1	6.2	9.6	6.7	10.0	6.7	10.6	6.6	11.2	6.5
	73	22.5	7.9	5.9	8.5	6.3	9.1	6.2	9.6	6.7	10.0	6.7	10.6	6.6	11.2	6.5
	77	25.0	7.9	5.9	8.5	6.3	9.1	6.2	9.6	6.7	10.0	6.7	10.5	6.6	11.0	6.4
	82	27.5	7.9	5.9	8.5	6.3	9.0	6.2	9.5	6.6	9.8	6.6	10.3	6.5	10.8	6.4
	86	30.0	7.9	5.9	8.4	6.2	8.9	6.1	9.3	6.6	9.6	6.5	10.1	6.4	10.6	6.3
	91	32.5	7.8	5.9	8.3	6.2	8.7	6.1	9.2	6.5	9.4	6.5	9.9	6.3	10.4	6.2
	95	35.0	7.8	5.9	8.2	6.1	8.6	6.0	9.0	6.4	9.3	6.4	9.7	6.3	10.2	6.1
	100	37.5	7.7	5.8	8.1	6.1	8.5	6.0	8.9	6.4	9.1	6.3	9.5	6.2	9.9	6.0
	104	40.0	7.7	5.8	8.0	6.0	8.4	5.9	8.7	6.3	9.0	6.3	9.4	6.1	9.7	6.0
	110	43.0	7.6	5.8	7.8	6.0	8.2	5.8	8.5	6.2	8.7	6.2	9.1	6.0	9.5	5.9
100 (11.2)	68	20.0	9.9	7.3	10.6	7.7	11.3	7.7	12.0	8.2	12.5	8.2	13.2	8.1	13.9	8.0
	73	22.5	9.9	7.3	10.6	7.7	11.3	7.7	12.0	8.2	12.5	8.2	13.2	8.1	13.9	8.0
	77	25.0	9.9	7.3	10.6	7.7	11.3	7.7	12.0	8.2	12.4	8.2	13.1	8.1	13.7	7.9
	82	27.5	9.8	7.3	10.5	7.7	11.2	7.6	11.8	8.1	12.2	8.1	12.8	8.0	13.4	7.8
	86	30.0	9.8	7.3	10.4	7.6	11.0	7.5	11.6	8.1	12.0	8.0	12.6	7.9	13.2	7.7
	91	32.5	9.7	7.2	10.3	7.5	10.9	7.4	11.4	8.0	11.7	7.9	12.3	7.8	12.9	7.6
	95	35.0	9.7	7.2	10.2	7.5	10.7	7.4	11.2	7.9	11.6	7.8	12.1	7.7	12.7	7.5
	100	37.5	9.6	7.2	10.0	7.4	10.6	7.3	11.0	7.8	11.3	7.7	11.8	7.6	12.4	7.4
	104	40.0	9.6	7.1	9.9	7.4	10.4	7.2	10.8	7.7	11.1	7.7	11.6	7.5	12.1	7.3
	110	43.0	9.5	7.1	9.8	7.3	10.2	7.2	10.6	7.6	10.9	7.5	11.3	7.4	11.8	7.2
125 (14.0)	68	20.0	12.3	9.3	13.3	9.8	14.1	9.7	15.0	10.5	15.6	10.5	16.5	10.3	17.4	10.2
	73	22.5	12.3	9.3	13.3	9.8	14.1	9.7	15.0	10.5	15.6	10.5	16.5	10.3	17.4	10.2
	77	25.0	12.3	9.3	13.3	9.8	14.1	9.7	15.0	10.5	15.5	10.4	16.3	10.3	17.2	10.1
	82	27.5	12.3	9.3	13.2	9.8	14.0	9.7	14.7	10.4	15.2	10.3	16.0	10.1	16.8	9.9
	86	30.0	12.2	9.2	13.0	9.7	13.8	9.6	14.5	10.3	15.0	10.2	15.7	10.0	16.5	9.8
	91	32.5	12.2	9.2	12.8	9.6	13.6	9.5	14.2	10.2	14.7	10.1	15.4	9.9	16.1	9.7
	95	35.0	12.1	9.2	12.7	9.5	13.4	9.4	14.0	10.1	14.4	10.0	15.1	9.8	15.8	9.6
	100	37.5	12.0	9.1	12.5	9.5	13.2	9.3	13.8	10.0	14.2	9.9	14.8	9.7	15.5	9.4
	104	40.0	12.0	9.1	12.4	9.4	13.0	9.2	13.6	9.9	13.9	9.8	14.5	9.6	15.2	9.3
	110	43.0	11.9	9.0	12.2	9.3	12.8	9.1	13.3	9.7	13.6	9.6	14.2	9.4	14.7	9.2

kcal/h = kW x 860, Btu/h = kW x 3,412

CT

E7. Cooling capacity with PQHY-P200-900Y(S)HM PQRY-P200-600Y(S)HM

PLFY-P-VLMD-E

CA : Capacity(kW) SHC : Sensible Heat Capacity(kW)

Model size (Rated kW)	Water temp.		Indoor air temp.													
			71 ˚FDB / 59˚FWB		73˚FDB / 61˚FWB		77˚FDB / 64˚FWB		81˚FDB / 66˚FWB		82˚FDB / 68˚FWB		86˚FDB / 72˚FWB		90˚FDB / 75˚FWB	
			21.5˚CDB / 15˚CWB		23˚CDB / 16˚CWB		25˚CDB / 18˚CWB		27˚CDB / 19˚CWB		28˚CDB / 20˚CWB		30˚CDB / 22˚CWB		32˚CDB / 24˚CWB	
	˚F	˚C	CA	SHC	CA	SHC	CA	SHC	CA	SHC	CA	SHC	CA	SHC	CA	SHC
20 (2.2)	50	10.0	2.0	1.8	2.0	1.9	2.1	1.9	2.2	2.0	2.2	2.0	2.2	1.9	2.2	1.8
	68	20.0	2.0	1.8	2.0	1.9	2.1	1.9	2.2	2.0	2.2	2.0	2.2	1.9	2.2	1.8
	86	30.0	2.0	1.8	2.0	1.9	2.1	1.9	2.2	2.0	2.2	2.0	2.2	1.9	2.2	1.8
	104	40.0	1.8	1.7	1.8	1.8	1.9	1.8	2.0	1.9	2.0	1.9	2.0	1.8	2.0	1.8
	113	45.0	1.7	1.7	1.7	1.7	1.8	1.7	1.8	1.8	1.8	1.8	1.8	1.8	1.8	1.7
25 (2.8)	50	10.0	2.5	2.1	2.6	2.1	2.7	2.1	2.8	2.2	2.8	2.2	2.8	2.1	2.8	2.0
	68	20.0	2.5	2.1	2.6	2.1	2.7	2.1	2.8	2.2	2.8	2.2	2.8	2.1	2.8	2.0
	86	30.0	2.5	2.1	2.6	2.1	2.7	2.1	2.8	2.2	2.8	2.2	2.8	2.1	2.8	2.0
	104	40.0	2.2	1.9	2.3	2.0	2.4	2.0	2.5	2.1	2.5	2.1	2.5	2.0	2.5	1.9
	113	45.0	2.1	1.9	2.2	1.9	2.3	1.9	2.3	2.1	2.3	2.0	2.3	1.9	2.3	1.9
32 (3.6)	50	10.0	3.2	2.5	3.3	2.5	3.5	2.5	3.6	2.6	3.6	2.6	3.6	2.5	3.6	2.4
	68	20.0	3.2	2.5	3.3	2.5	3.5	2.5	3.6	2.6	3.6	2.6	3.6	2.5	3.6	2.4
	86	30.0	3.2	2.5	3.3	2.5	3.5	2.5	3.6	2.6	3.6	2.6	3.6	2.5	3.6	2.4
	104	40.0	2.9	2.3	3.0	2.4	3.1	2.3	3.2	2.5	3.2	2.4	3.2	2.3	3.2	2.2
	113	45.0	2.7	2.2	2.8	2.3	2.9	2.2	3.0	2.4	3.0	2.3	3.0	2.3	3.0	2.2
40 (4.5)	50	10.0	4.1	2.9	4.2	2.9	4.4	2.9	4.5	3.0	4.5	3.0	4.5	2.8	4.5	2.7
	68	20.0	4.1	2.9	4.2	2.9	4.4	2.9	4.5	3.0	4.5	3.0	4.5	2.8	4.5	2.7
	86	30.0	4.1	2.9	4.2	2.9	4.4	2.9	4.5	3.0	4.5	3.0	4.5	2.8	4.5	2.7
	104	40.0	3.6	2.6	3.7	2.7	3.9	2.7	4.0	2.8	4.0	2.7	4.0	2.6	4.0	2.5
	113	45.0	3.4	2.5	3.5	2.6	3.7	2.6	3.8	2.7	3.8	2.6	3.8	2.5	3.8	2.4
50 (5.6)	50	10.0	5.0	3.7	5.2	3.8	5.5	3.7	5.6	3.9	5.6	3.8	5.6	3.6	5.6	3.5
	68	20.0	5.0	3.7	5.2	3.8	5.5	3.7	5.6	3.9	5.6	3.8	5.6	3.6	5.6	3.5
	86	30.0	5.0	3.7	5.2	3.8	5.5	3.7	5.6	3.9	5.6	3.8	5.6	3.6	5.6	3.5
	104	40.0	4.5	3.4	4.6	3.5	4.9	3.4	5.0	3.6	5.0	3.6	5.0	3.4	5.0	3.2
	113	45.0	4.2	3.3	4.3	3.4	4.6	3.3	4.7	3.5	4.7	3.4	4.7	3.3	4.7	3.1
63 (7.1)	50	10.0	6.4	4.5	6.6	4.7	6.9	4.6	7.1	4.8	7.1	4.7	7.1	4.5	7.1	4.2
	68	20.0	6.4	4.5	6.6	4.7	6.9	4.6	7.1	4.8	7.1	4.7	7.1	4.5	7.1	4.2
	86	30.0	6.4	4.5	6.6	4.7	6.9	4.6	7.1	4.8	7.1	4.7	7.1	4.5	7.1	4.2
	104	40.0	5.7	4.2	5.8	4.3	6.2	4.2	6.3	4.5	6.3	4.4	6.3	4.1	6.3	4.0
	113	45.0	5.3	4.0	5.5	4.1	5.8	4.1	5.9	4.3	5.9	4.2	5.9	4.0	5.9	3.8
80 (9.0)	50	10.0	8.1	6.0	8.3	6.2	8.8	6.1	9.0	6.4	9.0	6.3	9.0	6.0	9.0	5.7
	68	20.0	8.1	6.0	8.3	6.2	8.8	6.1	9.0	6.4	9.0	6.3	9.0	6.0	9.0	5.7
	86	30.0	8.1	6.0	8.3	6.2	8.8	6.1	9.0	6.4	9.0	6.3	9.0	6.0	9.0	5.7
	104	40.0	7.2	5.6	7.4	5.7	7.8	5.7	8.0	6.0	8.0	5.9	8.0	5.6	8.0	5.4
	113	45.0	6.8	5.4	7.0	5.5	7.3	5.5	7.5	5.8	7.5	5.7	7.5	5.4	7.5	5.2
100 (11.2)	50	10.0	10.1	7.4	10.4	7.6	10.9	7.5	11.2	7.9	11.2	7.7	11.2	7.3	11.2	7.0
	68	20.0	10.1	7.4	10.4	7.6	10.9	7.5	11.2	7.9	11.2	7.7	11.2	7.3	11.2	7.0
	86	30.0	10.1	7.4	10.4	7.6	10.9	7.5	11.2	7.9	11.2	7.7	11.2	7.3	11.2	7.0
	104	40.0	9.0	6.8	9.2	7.0	9.7	6.9	10.0	7.3	10.0	7.2	10.0	6.9	10.0	6.6
	113	45.0	8.4	6.6	8.7	6.8	9.1	6.7	9.4	7.1	9.4	6.9	9.4	6.6	9.4	6.3
125 (14.0)	50	10.0	12.6	9.4	13.0	9.7	13.7	9.5	14.0	10.1	14.0	9.8	14.0	9.4	14.0	8.9
	68	20.0	12.6	9.4	13.0	9.7	13.7	9.5	14.0	10.1	14.0	9.8	14.0	9.4	14.0	8.9
	86	30.0	12.6	9.4	13.0	9.7	13.7	9.5	14.0	10.1	14.0	9.8	14.0	9.4	14.0	8.9
	104	40.0	11.2	8.7	11.5	9.0	12.1	8.9	12.5	9.4	12.5	9.2	12.5	8.8	12.5	8.4
	113	45.0	10.5	8.4	10.8	8.7	11.4	8.5	11.7	9.1	11.7	8.9	11.7	8.5	11.7	8.2

kcal/h = kW x 860, Btu/h = kW x 3,412

E8. Cooling capacity with PUMY-P100,125,140YHMB,VHMB

PLFY-P-VLMD-E

CA : Capacity(kW) SHC : Sensible Heat Capacity(kW)

Model size (Rated kW)	Outdoor air temp.		Indoor air temp.													
			71 ˚FDB / 59˚FWB		73˚FDB / 61˚FWB		77˚FDB / 64˚FWB		81˚FDB / 66˚FWB		82˚FDB / 68˚FWB		86˚FDB / 72˚FWB		90˚FDB / 75˚FWB	
			21.5˚CDB / 15˚CWB		23˚CDB / 16˚CWB		25˚CDB / 18˚CWB		27˚CDB / 19˚CWB		28˚CDB / 20˚CWB		30˚CDB / 22˚CWB		32˚CDB / 24˚CWB	
	˚FDB	˚CDB	CA	SHC	CA	SHC	CA	SHC	CA	SHC	CA	SHC	CA	SHC	CA	SHC
20 (2.2)	68	20.0	2.1	1.9	2.2	1.9	2.3	1.9	2.4	2.1	2.4	2.1	2.6	2.0	2.7	2.0
	73	22.5	2.0	1.8	2.1	1.9	2.3	1.9	2.3	2.1	2.4	2.0	2.6	2.0	2.7	2.0
	77	25.0	2.0	1.8	2.1	1.9	2.2	1.9	2.3	2.0	2.4	2.0	2.5	2.0	2.6	2.0
	82	27.5	2.0	1.8	2.1	1.9	2.2	1.9	2.3	2.0	2.4	2.0	2.5	2.0	2.6	2.0
	86	30.0	2.0	1.8	2.1	1.9	2.2	1.9	2.3	2.0	2.3	2.0	2.5	2.0	2.6	2.0
	91	32.5	1.9	1.8	2.0	1.9	2.2	1.9	2.2	2.0	2.3	2.0	2.4	2.0	2.6	1.9
	95	35.0	1.9	1.8	2.0	1.9	2.1	1.9	2.2	2.0	2.3	2.0	2.4	2.0	2.5	1.9
	100	37.5	1.9	1.8	2.0	1.9	2.1	1.9	2.2	2.0	2.2	2.0	2.4	2.0	2.5	1.9
	104	40.0	1.8	1.8	1.9	1.8	2.1	1.8	2.1	2.0	2.2	2.0	2.4	2.0	2.5	1.9
	110	43.0	1.8	1.7	1.9	1.8	2.1	1.8	2.1	2.0	2.2	1.9	2.3	1.9	2.4	1.9
25 (2.8)	68	20.0	2.6	2.1	2.8	2.2	2.9	2.2	3.0	2.3	3.1	2.3	3.3	2.3	3.4	2.2
	73	22.5	2.6	2.1	2.7	2.2	2.9	2.2	3.0	2.3	3.1	2.3	3.2	2.3	3.4	2.2
	77	25.0	2.6	2.1	2.7	2.2	2.9	2.2	2.9	2.3	3.0	2.3	3.2	2.3	3.4	2.2
	82	27.5	2.5	2.1	2.7	2.2	2.8	2.1	2.9	2.3	3.0	2.3	3.2	2.2	3.3	2.2
	86	30.0	2.5	2.1	2.6	2.2	2.8	2.1	2.9	2.3	3.0	2.3	3.2	2.2	3.3	2.2
	91	32.5	2.5	2.0	2.6	2.1	2.8	2.1	2.8	2.3	2.9	2.2	3.1	2.2	3.3	2.2
	95	35.0	2.4	2.0	2.6	2.1	2.7	2.1	2.8	2.2	2.9	2.2	3.1	2.2	3.2	2.2
	100	37.5	2.4	2.0	2.5	2.1	2.7	2.1	2.8	2.2	2.8	2.2	3.0	2.2	3.2	2.2
	104	40.0	2.3	2.0	2.5	2.1	2.7	2.1	2.7	2.2	2.8	2.2	3.0	2.2	3.2	2.1
	110	43.0	2.3	2.0	2.4	2.1	2.6	2.1	2.7	2.2	2.7	2.2	3.0	2.2	3.1	2.1
32 (3.6)	68	20.0	3.4	2.5	3.6	2.6	3.7	2.6	3.9	2.8	4.0	2.7	4.2	2.7	4.4	2.6
	73	22.5	3.3	2.5	3.5	2.6	3.7	2.6	3.8	2.7	4.0	2.7	4.2	2.7	4.4	2.6
	77	25.0	3.3	2.5	3.5	2.6	3.7	2.6	3.8	2.7	3.9	2.7	4.1	2.7	4.3	2.6
	82	27.5	3.3	2.5	3.4	2.6	3.6	2.6	3.7	2.7	3.9	2.7	4.1	2.7	4.3	2.6
	86	30.0	3.2	2.5	3.4	2.6	3.6	2.5	3.7	2.7	3.8	2.7	4.1	2.6	4.2	2.6
	91	32.5	3.2	2.4	3.3	2.5	3.6	2.5	3.7	2.7	3.8	2.6	4.0	2.6	4.2	2.6
	95	35.0	3.1	2.4	3.3	2.5	3.5	2.5	3.6	2.6	3.7	2.6	4.0	2.6	4.2	2.5
	100	37.5	3.1	2.4	3.2	2.5	3.5	2.5	3.6	2.6	3.7	2.6	3.9	2.6	4.1	2.5
	104	40.0	3.0	2.4	3.2	2.5	3.4	2.5	3.5	2.6	3.6	2.6	3.9	2.6	4.1	2.5
	110	43.0	2.9	2.3	3.1	2.4	3.4	2.4	3.4	2.6	3.5	2.6	3.8	2.5	4.0	2.5
40 (4.5)	68	20.0	4.2	3.0	4.4	3.1	4.7	3.0	4.8	3.2	5.0	3.2	5.3	3.1	5.5	3.1
	73	22.5	4.2	2.9	4.4	3.1	4.6	3.0	4.8	3.2	4.9	3.2	5.2	3.1	5.5	3.0
	77	25.0	4.1	2.9	4.3	3.0	4.6	3.0	4.7	3.1	4.9	3.1	5.2	3.1	5.4	3.0
	82	27.5	4.1	2.9	4.3	3.0	4.5	3.0	4.7	3.1	4.8	3.1	5.1	3.1	5.4	3.0
	86	30.0	4.0	2.9	4.2	3.0	4.5	2.9	4.6	3.1	4.8	3.1	5.1	3.0	5.3	3.0
	91	32.5	4.0	2.8	4.2	2.9	4.4	2.9	4.6	3.1	4.7	3.1	5.0	3.0	5.3	2.9
	95	35.0	3.9	2.8	4.1	2.9	4.4	2.9	4.5	3.0	4.6	3.0	4.9	3.0	5.2	2.9
	100	37.5	3.8	2.8	4.0	2.9	4.3	2.9	4.5	3.0	4.6	3.0	4.9	3.0	5.1	2.9
	104	40.0	3.8	2.7	4.0	2.8	4.3	2.8	4.4	3.0	4.5	3.0	4.8	2.9	5.1	2.9
	110	43.0	3.7	2.7	3.9	2.8	4.2	2.8	4.3	3.0	4.4	2.9	4.8	2.9	5.0	2.9
50 (5.6)	68	20.0	5.3	3.8	5.5	3.9	5.8	3.9	6.0	4.1	6.2	4.1	6.6	4.0	6.9	3.9
	73	22.5	5.2	3.8	5.5	3.9	5.8	3.9	6.0	4.1	6.1	4.0	6.5	4.0	6.8	3.9
	77	25.0	5.2	3.7	5.4	3.9	5.7	3.8	5.9	4.0	6.1	4.0	6.4	4.0	6.7	3.9
	82	27.5	5.1	3.7	5.3	3.8	5.7	3.8	5.8	4.0	6.0	4.0	6.4	3.9	6.7	3.8
	86	30.0	5.0	3.7	5.3	3.8	5.6	3.8	5.8	4.0	5.9	4.0	6.3	3.9	6.6	3.8
	91	32.5	4.9	3.6	5.2	3.8	5.5	3.7	5.7	3.9	5.9	3.9	6.2	3.9	6.5	3.8
	95	35.0	4.9	3.6	5.1	3.7	5.5	3.7	5.6	3.9	5.8	3.9	6.2	3.8	6.5	3.8
	100	37.5	4.8	3.5	5.0	3.7	5.4	3.7	5.5	3.9	5.7	3.8	6.1	3.8	6.4	3.7
	104	40.0	4.7	3.5	4.9	3.7	5.3	3.6	5.5	3.8	5.6	3.8	6.0	3.8	6.3	3.7
	110	43.0	4.6	3.4	4.8	3.6	5.2	3.6	5.4	3.8	5.5	3.8	5.9	3.8	6.2	3.7
63 (7.1)	68	20.0	6.7	4.7	7.0	4.9	7.4	4.8	7.6	5.1	7.9	5.0	8.3	5.0	8.7	4.8
	73	22.5	6.6	4.7	6.9	4.8	7.3	4.8	7.6	5.0	7.8	5.0	8.2	4.9	8.6	4.8
	77	25.0	6.5	4.6	6.9	4.8	7.2	4.7	7.5	5.0	7.7	5.0	8.2	4.9	8.5	4.8
	82	27.5	6.5	4.6	6.8	4.8	7.2	4.7	7.4	4.9	7.6	4.9	8.1	4.9	8.5	4.7
	86	30.0	6.4	4.5	6.7	4.7	7.1	4.7	7.3	4.9	7.5	4.9	8.0	4.8	8.4	4.7
	91	32.5	6.3	4.5	6.6	4.7	7.0	4.6	7.2	4.9	7.4	4.8	7.9	4.8	8.3	4.7
	95	35.0	6.2	4.4	6.5	4.6	6.9	4.6	7.1	4.8	7.3	4.8	7.8	4.7	8.2	4.6
	100	37.5	6.1	4.4	6.4	4.6	6.8	4.5	7.0	4.8	7.2	4.7	7.7	4.7	8.1	4.6
	104	40.0	5.9	4.3	6.3	4.5	6.8	4.5	6.9	4.7	7.1	4.7	7.6	4.7	8.0	4.6
	110	43.0	5.8	4.2	6.1	4.4	6.6	4.5	6.8	4.7	6.9	4.6	7.5	4.6	7.9	4.5

kcal/h = kW x 860, Btu/h = kW x 3,412

CT

E8. Cooling capacity with PUMY-P100,125,140YHMB,VHMB

PLFY-P-VLMD-E

CA : Capacity(kW) SHC : Sensible Heat Capacity(kW)

Model size (Rated kW)	Outdoor air temp.		Indoor air temp.													
			71 ˚FDB / 59˚FWB		73˚FDB / 61˚FWB		77˚FDB / 64˚FWB		81˚FDB / 66˚FWB		82˚FDB / 68˚FWB		86˚FDB / 72˚FWB		90˚FDB / 75˚FWB	
			21.5˚CDB / 15˚CWB		23˚CDB / 16˚CWB		25˚CDB / 18˚CWB		27˚CDB / 19˚CWB		28˚CDB / 20˚CWB		30˚CDB / 22˚CWB		32˚CDB / 24˚CWB	
	˚FDB	˚CDB	CA	SHC	CA	SHC	CA	SHC	CA	SHC	CA	SHC	CA	SHC	CA	SHC
80 (9.0)	68	20.0	8.5	6.2	8.9	6.5	9.4	6.4	9.7	6.7	10.0	6.7	10.5	6.6	11.0	6.4
	73	22.5	8.4	6.2	8.8	6.4	9.3	6.3	9.6	6.7	9.9	6.7	10.4	6.6	10.9	6.4
	77	25.0	8.3	6.1	8.7	6.4	9.2	6.3	9.5	6.6	9.8	6.6	10.3	6.5	10.8	6.4
	82	27.5	8.2	6.1	8.6	6.3	9.1	6.2	9.4	6.6	9.7	6.6	10.2	6.5	10.7	6.3
	86	30.0	8.1	6.0	8.5	6.3	9.0	6.2	9.3	6.6	9.5	6.5	10.1	6.4	10.6	6.3
	91	32.5	7.9	5.9	8.4	6.2	8.9	6.1	9.1	6.5	9.4	6.5	10.0	6.4	10.5	6.2
	95	35.0	7.8	5.9	8.2	6.1	8.8	6.1	9.0	6.4	9.3	6.4	9.9	6.3	10.4	6.2
	100	37.5	7.7	5.8	8.1	6.1	8.7	6.1	8.9	6.4	9.1	6.3	9.8	6.3	10.3	6.2
	104	40.0	7.5	5.7	8.0	6.0	8.6	6.0	8.8	6.3	9.0	6.3	9.7	6.2	10.1	6.1
	110	43.0	7.3	5.6	7.8	5.9	8.4	5.9	8.6	6.3	8.8	6.2	9.5	6.2	10.0	6.1
100 (11.2)	68	20.0	10.5	7.6	11.1	7.9	11.7	7.8	12.0	8.3	12.4	8.2	13.1	8.1	13.7	7.9
	73	22.5	10.4	7.6	10.9	7.9	11.6	7.8	11.9	8.2	12.3	8.2	13.0	8.0	13.6	7.8
	77	25.0	10.3	7.5	10.8	7.8	11.4	7.7	11.8	8.1	12.2	8.1	12.9	8.0	13.5	7.8
	82	27.5	10.2	7.4	10.7	7.7	11.3	7.7	11.7	8.1	12.0	8.0	12.7	7.9	13.4	7.7
	86	30.0	10.0	7.4	10.5	7.7	11.2	7.6	11.5	8.0	11.9	8.0	12.6	7.9	13.2	7.7
	91	32.5	9.9	7.3	10.4	7.6	11.1	7.5	11.4	8.0	11.7	7.9	12.5	7.8	13.1	7.6
	95	35.0	9.7	7.2	10.2	7.5	10.9	7.5	11.2	7.9	11.5	7.8	12.3	7.8	12.9	7.6
	100	37.5	9.5	7.1	10.1	7.4	10.8	7.4	11.1	7.8	11.4	7.8	12.2	7.7	12.8	7.5
	104	40.0	9.4	7.0	9.9	7.4	10.7	7.4	10.9	7.8	11.2	7.7	12.0	7.6	12.6	7.5
	110	43.0	9.1	6.9	9.7	7.3	10.5	7.3	10.7	7.7	11.0	7.6	11.8	7.6	12.4	7.4
125 (14.0)	68	20.0	13.2	9.7	13.8	10.1	14.6	9.9	15.1	10.5	15.5	10.5	16.4	10.3	17.2	10.1
	73	22.5	13.0	9.6	13.7	10.0	14.4	9.9	14.9	10.5	15.4	10.4	16.2	10.2	17.0	10.0
	77	25.0	12.9	9.5	13.5	9.9	14.3	9.8	14.7	10.4	15.2	10.3	16.1	10.2	16.9	9.9
	82	27.5	12.7	9.5	13.4	9.9	14.1	9.7	14.6	10.3	15.0	10.2	15.9	10.1	16.7	9.9
	86	30.0	12.5	9.4	13.2	9.8	14.0	9.7	14.4	10.2	14.8	10.2	15.8	10.0	16.5	9.8
	91	32.5	12.4	9.3	13.0	9.7	13.8	9.6	14.2	10.2	14.6	10.1	15.6	10.0	16.3	9.8
	95	35.0	12.2	9.2	12.8	9.6	13.7	9.5	14.0	10.1	14.4	10.0	15.4	9.9	16.2	9.7
	100	37.5	11.9	9.1	12.6	9.5	13.5	9.5	13.8	10.0	14.2	9.9	15.2	9.8	16.0	9.6
	104	40.0	11.7	9.0	12.4	9.4	13.3	9.4	13.7	9.9	14.0	9.8	15.0	9.8	15.8	9.6
	110	43.0	11.4	8.8	12.1	9.3	13.1	9.3	13.4	9.8	13.7	9.7	14.8	9.7	15.6	9.5

kcal/h = kW x 860, Btu/h = kW x 3,412

F1. Cooling capacity with PUHY-P200, 250YHM/PUHY-EP200, 250YHM PURY-P200, 250YHM/PURY-EP200, 250YHM

PLFY-P-VCM-E

CA : Capacity(kW) SHC : Sensible Heat Capacity(kW)

Model size (Rated kW)	Outdoor air temp.		Indoor air temp.													
			71 ˚FDB / 59˚FWB		73˚FDB / 61˚FWB		77˚FDB / 64˚FWB		81˚FDB / 66˚FWB		82˚FDB / 68˚FWB		86˚FDB / 72˚FWB		90˚FDB / 75˚FWB	
			21.5˚CDB / 15˚CWB		23˚CDB / 16˚CWB		25˚CDB / 18˚CWB		27˚CDB / 19˚CWB		28˚CDB / 20˚CWB		30˚CDB / 22˚CWB		32˚CDB / 24˚CWB	
	˚FDB	˚CDB	CA	SHC	CA	SHC	CA	SHC	CA	SHC	CA	SHC	CA	SHC	CA	SHC
20 (2.2)	68	20.0	2.1	1.8	2.2	1.9	2.3	1.8	2.4	1.9	2.5	2.0	2.6	1.9	2.8	1.9
	73	22.5	2.1	1.8	2.2	1.9	2.3	1.8	2.4	1.9	2.5	2.0	2.6	1.9	2.8	1.9
	77	25.0	2.1	1.8	2.2	1.9	2.3	1.8	2.4	1.9	2.4	1.9	2.6	1.9	2.7	1.9
	82	27.5	2.1	1.8	2.1	1.8	2.3	1.8	2.3	1.9	2.4	1.9	2.5	1.9	2.7	1.9
	86	30.0	2.0	1.8	2.1	1.8	2.2	1.8	2.3	1.8	2.3	1.9	2.5	1.9	2.6	1.9
	91	32.5	2.0	1.7	2.1	1.8	2.2	1.8	2.2	1.8	2.3	1.9	2.4	1.9	2.6	1.8
	95	35.0	2.0	1.7	2.0	1.8	2.1	1.8	2.2	1.8	2.3	1.9	2.4	1.9	2.5	1.8
	100	37.5	1.9	1.7	2.0	1.8	2.1	1.8	2.1	1.8	2.2	1.9	2.3	1.8	2.5	1.8
	104	40.0	1.9	1.7	1.9	1.8	2.1	1.7	2.1	1.8	2.2	1.9	2.3	1.8	2.4	1.8
	110	43.0	1.8	1.7	1.9	1.7	2.0	1.7	2.0	1.8	2.1	1.8	2.2	1.8	2.4	1.8
25 (2.8)	68	20.0	2.7	2.1	2.8	2.2	2.9	2.2	3.0	2.2	3.1	2.3	3.3	2.3	3.5	2.3
	73	22.5	2.7	2.1	2.8	2.2	2.9	2.2	3.0	2.2	3.1	2.3	3.3	2.3	3.5	2.3
	77	25.0	2.7	2.1	2.8	2.2	2.9	2.2	3.0	2.2	3.1	2.3	3.3	2.3	3.5	2.3
	82	27.5	2.6	2.1	2.7	2.2	2.9	2.2	3.0	2.2	3.1	2.3	3.2	2.3	3.4	2.2
	86	30.0	2.6	2.1	2.7	2.2	2.8	2.2	2.9	2.2	3.0	2.3	3.1	2.2	3.3	2.2
	91	32.5	2.5	2.1	2.6	2.2	2.8	2.1	2.8	2.2	2.9	2.3	3.1	2.2	3.3	2.2
	95	35.0	2.5	2.1	2.6	2.1	2.7	2.1	2.8	2.1	2.9	2.2	3.0	2.2	3.2	2.2
	100	37.5	2.5	2.0	2.5	2.1	2.7	2.1	2.7	2.1	2.8	2.2	3.0	2.2	3.1	2.1
	104	40.0	2.4	2.0	2.5	2.1	2.6	2.1	2.7	2.1	2.8	2.2	2.9	2.1	3.1	2.1
	110	43.0	2.4	2.0	2.4	2.1	2.6	2.0	2.6	2.1	2.7	2.2	2.8	2.1	3.0	2.1
32 (3.6)	68	20.0	3.4	2.6	3.5	2.7	3.8	2.7	3.9	2.7	4.0	2.8	4.2	2.8	4.6	2.8
	73	22.5	3.4	2.6	3.5	2.7	3.8	2.7	3.9	2.7	4.0	2.8	4.2	2.8	4.6	2.8
	77	25.0	3.4	2.6	3.5	2.7	3.8	2.7	3.9	2.7	4.0	2.8	4.2	2.8	4.5	2.7
	82	27.5	3.4	2.6	3.5	2.7	3.7	2.6	3.8	2.7	3.9	2.8	4.1	2.7	4.4	2.7
	86	30.0	3.3	2.6	3.4	2.6	3.6	2.6	3.7	2.7	3.8	2.7	4.0	2.7	4.3	2.7
	91	32.5	3.3	2.5	3.4	2.6	3.6	2.6	3.7	2.6	3.8	2.7	4.0	2.7	4.2	2.6
	95	35.0	3.2	2.5	3.3	2.6	3.5	2.6	3.6	2.6	3.7	2.7	3.9	2.6	4.1	2.6
	100	37.5	3.2	2.5	3.2	2.6	3.4	2.5	3.5	2.6	3.6	2.7	3.8	2.6	4.0	2.6
	104	40.0	3.1	2.5	3.2	2.5	3.4	2.5	3.5	2.5	3.6	2.6	3.7	2.6	4.0	2.6
	110	43.0	3.0	2.4	3.1	2.5	3.3	2.5	3.3	2.5	3.5	2.6	3.6	2.6	3.9	2.5
40 (4.5)	68	20.0	4.3	3.0	4.4	3.1	4.7	3.1	4.9	3.1	5.0	3.3	5.3	3.2	5.7	3.2
	73	22.5	4.3	3.0	4.4	3.1	4.7	3.1	4.9	3.1	5.0	3.3	5.3	3.2	5.7	3.2
	77	25.0	4.3	3.0	4.4	3.1	4.7	3.1	4.9	3.1	5.0	3.2	5.3	3.2	5.6	3.1
	82	27.5	4.3	3.0	4.4	3.1	4.6	3.1	4.8	3.1	4.9	3.2	5.2	3.2	5.5	3.1
	86	30.0	4.2	3.0	4.3	3.1	4.6	3.0	4.7	3.1	4.8	3.2	5.0	3.1	5.4	3.1
	91	32.5	4.1	3.0	4.2	3.0	4.5	3.0	4.6	3.0	4.7	3.1	5.0	3.1	5.3	3.0
	95	35.0	4.0	2.9	4.1	3.0	4.4	3.0	4.5	3.0	4.6	3.1	4.9	3.0	5.2	3.0
	100	37.5	3.9	2.9	4.1	3.0	4.3	2.9	4.4	2.9	4.5	3.1	4.8	3.0	5.0	2.9
	104	40.0	3.9	2.8	4.0	2.9	4.2	2.9	4.3	2.9	4.5	3.0	4.7	3.0	5.0	2.9
	110	43.0	3.8	2.8	3.9	2.9	4.1	2.8	4.2	2.9	4.3	3.0	4.5	2.9	4.8	2.9

kcal/h = kW x 860, Btu/h = kW x 3,412

CT

F1. Cooling capacity with PUHY-P200, 250YHM/PUHY-EP200, 250YHM PURY-P200, 250YHM/PURY-EP200, 250YHM

PLFY-P-VBM-E

CA : Capacity(kW) SHC : Sensible Heat Capacity(kW)

Model size (Rated kW)	Outdoor air temp.		Indoor air temp.													
			71 ˚FDB / 59˚FWB		73˚FDB / 61˚FWB		77˚FDB / 64˚FWB		81˚FDB / 66˚FWB		82˚FDB / 68˚FWB		86˚FDB / 72˚FWB		90˚FDB / 75˚FWB	
			21.5˚CDB / 15˚CWB		23˚CDB / 16˚CWB		25˚CDB / 18˚CWB		27˚CDB / 19˚CWB		28˚CDB / 20˚CWB		30˚CDB / 22˚CWB		32˚CDB / 24˚CWB	
	˚FDB	˚CDB	CA	SHC	CA	SHC	CA	SHC	CA	SHC	CA	SHC	CA	SHC	CA	SHC
32 (3.6)	68	20.0	3.2	2.7	3.4	2.9	3.7	2.9	3.9	3.1	4.0	3.1	4.2	3.1	4.6	3.0
	73	22.5	3.2	2.7	3.4	2.9	3.7	2.9	3.9	3.1	4.0	3.1	4.2	3.1	4.6	3.0
	77	25.0	3.2	2.7	3.4	2.9	3.7	2.9	3.9	3.1	4.0	3.1	4.2	3.1	4.5	3.0
	82	27.5	3.2	2.7	3.4	2.9	3.6	2.9	3.8	3.1	3.9	3.0	4.1	3.0	4.4	3.0
	86	30.0	3.2	2.7	3.3	2.9	3.6	2.8	3.7	3.1	3.8	3.0	4.0	3.0	4.3	3.0
	91	32.5	3.1	2.7	3.3	2.8	3.5	2.8	3.7	3.0	3.7	3.0	4.0	3.0	4.2	2.9
	95	35.0	3.1	2.7	3.2	2.8	3.4	2.8	3.6	3.0	3.7	3.0	3.9	2.9	4.1	2.9
	100	37.5	3.0	2.7	3.2	2.8	3.3	2.7	3.5	3.0	3.6	2.9	3.8	2.9	4.0	2.9
	104	40.0	3.0	2.6	3.1	2.7	3.3	2.7	3.5	2.9	3.5	2.9	3.7	2.9	4.0	2.8
	110	43.0	2.9	2.6	3.0	2.7	3.2	2.7	3.3	2.9	3.3	2.9	3.6	2.8	3.9	2.8
40 (4.5)	68	20.0	4.0	3.3	4.3	3.5	4.6	3.5	4.9	3.8	5.0	3.7	5.3	3.7	5.7	3.7
	73	22.5	4.0	3.3	4.3	3.5	4.6	3.5	4.9	3.8	5.0	3.7	5.3	3.7	5.7	3.7
	77	25.0	4.0	3.3	4.3	3.5	4.6	3.5	4.9	3.8	5.0	3.7	5.3	3.7	5.6	3.6
	82	27.5	4.0	3.3	4.3	3.5	4.5	3.5	4.8	3.7	4.8	3.7	5.2	3.7	5.5	3.6
	86	30.0	4.0	3.3	4.2	3.5	4.5	3.4	4.7	3.7	4.8	3.7	5.0	3.6	5.4	3.6
	91	32.5	3.9	3.3	4.1	3.4	4.4	3.4	4.6	3.7	4.7	3.6	5.0	3.6	5.3	3.5
	95	35.0	3.8	3.2	4.0	3.4	4.3	3.4	4.5	3.6	4.6	3.6	4.9	3.6	5.2	3.5
	100	37.5	3.8	3.2	4.0	3.4	4.2	3.3	4.4	3.6	4.5	3.5	4.8	3.5	5.0	3.5
	104	40.0	3.7	3.2	3.9	3.3	4.1	3.3	4.3	3.6	4.4	3.5	4.7	3.5	5.0	3.4
	110	43.0	3.6	3.2	3.8	3.3	4.0	3.3	4.2	3.5	4.2	3.4	4.5	3.4	4.8	3.4
50 (5.6)	68	20.0	5.0	3.8	5.3	4.0	5.8	4.0	6.0	4.3	6.2	4.3	6.6	4.3	7.1	4.2
	73	22.5	5.0	3.8	5.3	4.0	5.8	4.0	6.0	4.3	6.2	4.3	6.6	4.3	7.1	4.2
	77	25.0	5.0	3.8	5.3	4.0	5.8	4.0	6.0	4.3	6.2	4.3	6.6	4.2	6.9	4.2
	82	27.5	5.0	3.8	5.3	4.0	5.7	4.0	5.9	4.3	6.0	4.2	6.4	4.2	6.8	4.1
	86	30.0	4.9	3.8	5.2	4.0	5.5	3.9	5.8	4.2	5.9	4.2	6.3	4.1	6.7	4.1
	91	32.5	4.8	3.7	5.1	3.9	5.4	3.9	5.7	4.2	5.8	4.1	6.2	4.1	6.6	4.0
	95	35.0	4.8	3.7	5.0	3.9	5.3	3.8	5.6	4.1	5.7	4.1	6.0	4.0	6.4	4.0
	100	37.5	4.7	3.7	4.9	3.8	5.2	3.8	5.5	4.1	5.5	4.0	5.9	4.0	6.3	3.9
	104	40.0	4.6	3.7	4.8	3.8	5.1	3.8	5.4	4.0	5.5	4.0	5.8	3.9	6.2	3.9
	110	43.0	4.5	3.6	4.7	3.7	5.0	3.7	5.2	4.0	5.2	3.9	5.7	3.9	6.0	3.8
63 (7.1)	68	20.0	6.4	4.7	6.8	5.0	7.3	5.0	7.7	5.3	7.8	5.3	8.4	5.2	9.0	5.2
	73	22.5	6.4	4.7	6.8	5.0	7.3	5.0	7.7	5.3	7.8	5.3	8.4	5.2	9.0	5.2
	77	25.0	6.4	4.7	6.8	5.0	7.3	5.0	7.7	5.3	7.8	5.2	8.3	5.2	8.8	5.1
	82	27.5	6.3	4.7	6.7	4.9	7.2	4.9	7.5	5.2	7.6	5.2	8.1	5.1	8.7	5.0
	86	30.0	6.2	4.7	6.6	4.9	7.0	4.8	7.4	5.2	7.5	5.1	8.0	5.0	8.5	5.0
	91	32.5	6.1	4.6	6.5	4.8	6.9	4.8	7.2	5.1	7.3	5.0	7.8	5.0	8.3	4.9
	95	35.0	6.0	4.6	6.4	4.8	6.7	4.7	7.1	5.1	7.2	5.0	7.7	4.9	8.1	4.8
	100	37.5	6.0	4.5	6.2	4.7	6.6	4.6	6.9	5.0	7.0	4.9	7.5	4.9	8.0	4.8
	104	40.0	5.9	4.5	6.1	4.6	6.5	4.6	6.8	4.9	6.9	4.9	7.3	4.8	7.8	4.7
	110	43.0	5.8	4.4	6.0	4.6	6.3	4.5	6.6	4.8	6.6	4.7	7.2	4.7	7.6	4.7
80 (9.0)	68	20.0	8.1	5.9	8.6	6.2	9.3	6.2	9.7	6.6	9.9	6.5	10.6	6.5	11.4	6.4
	73	22.5	8.1	5.9	8.6	6.2	9.3	6.2	9.7	6.6	9.9	6.5	10.6	6.5	11.4	6.4
	77	25.0	8.1	5.9	8.6	6.2	9.3	6.2	9.7	6.6	9.9	6.5	10.5	6.4	11.2	6.3
	82	27.5	8.0	5.8	8.5	6.1	9.1	6.1	9.5	6.5	9.7	6.4	10.3	6.3	11.0	6.3
	86	30.0	7.9	5.8	8.4	6.1	8.9	6.0	9.4	6.4	9.5	6.3	10.1	6.2	10.8	6.2
	91	32.5	7.7	5.7	8.2	6.0	8.7	5.9	9.1	6.3	9.3	6.2	9.9	6.2	10.5	6.1
	95	35.0	7.7	5.7	8.1	5.9	8.6	5.8	9.0	6.3	9.1	6.2	9.7	6.1	10.3	6.0
	100	37.5	7.6	5.6	7.9	5.8	8.4	5.8	8.8	6.2	8.9	6.1	9.5	6.0	10.1	5.9
	104	40.0	7.4	5.5	7.7	5.7	8.2	5.7	8.6	6.1	8.8	6.0	9.3	5.9	9.9	5.9
	110	43.0	7.3	5.5	7.6	5.7	8.0	5.6	8.4	6.0	8.4	5.8	9.1	5.8	9.6	5.8
100 (11.2)	68	20.0	10.0	7.3	10.7	7.7	11.5	7.7	12.1	8.2	12.4	8.2	13.2	8.1	14.2	8.0
	73	22.5	10.0	7.3	10.7	7.7	11.5	7.7	12.1	8.2	12.4	8.2	13.2	8.1	14.2	8.0
	77	25.0	10.0	7.3	10.7	7.7	11.5	7.7	12.1	8.2	12.3	8.1	13.1	8.0	13.9	7.9
	82	27.5	10.0	7.3	10.6	7.7	11.3	7.6	11.9	8.1	12.0	8.0	12.8	7.9	13.7	7.8
	86	30.0	9.9	7.2	10.4	7.6	11.1	7.5	11.6	8.0	11.9	7.9	12.5	7.8	13.4	7.7
	91	32.5	9.6	7.1	10.2	7.5	10.9	7.4	11.4	7.9	11.6	7.8	12.3	7.7	13.1	7.6
	95	35.0	9.5	7.1	10.0	7.4	10.6	7.3	11.2	7.8	11.4	7.7	12.1	7.6	12.8	7.5
	100	37.5	9.4	7.0	9.9	7.3	10.4	7.2	10.9	7.7	11.1	7.6	11.9	7.5	12.5	7.4
	104	40.0	9.2	6.9	9.6	7.2	10.2	7.1	10.8	7.6	10.9	7.5	11.6	7.4	12.3	7.3
	110	43.0	9.1	6.9	9.4	7.1	10.0	7.0	10.4	7.5	10.4	7.3	11.3	7.3	12.0	7.2
125 (14.0)	68	20.0	12.5	8.9	13.4	9.4	14.4	9.4	15.1	10.0	15.5	9.9	16.5	9.8	17.7	9.7
	73	22.5	12.5	8.9	13.4	9.4	14.4	9.4	15.1	10.0	15.5	9.9	16.5	9.8	17.7	9.7
	77	25.0	12.5	8.9	13.4	9.4	14.4	9.4	15.1	10.0	15.4	9.9	16.4	9.7	17.4	9.6
	82	27.5	12.5	8.9	13.2	9.3	14.1	9.3	14.8	9.9	15.1	9.7	16.0	9.6	17.1	9.5
	86	30.0	12.3	8.8	13.0	9.2	13.9	9.1	14.6	9.7	14.8	9.6	15.7	9.4	16.7	9.3
	91	32.5	12.0	8.7	12.7	9.1	13.6	9.0	14.2	9.6	14.5	9.4	15.4	9.3	16.4	9.2
	95	35.0	11.9	8.6	12.5	8.9	13.3	8.9	14.0	9.5	14.2	9.3	15.1	9.2	16.0	9.1
	100	37.5	11.8	8.5	12.3	8.8	13.0	8.7	13.7	9.3	13.9	9.2	14.8	9.1	15.7	8.9
	104	40.0	11.6	8.4	12.0	8.7	12.8	8.6	13.4	9.2	13.7	9.1	14.5	9.0	15.4	8.8
	110	43.0	11.3	8.3	11.8	8.6	12.5	8.5	13.0	9.0	13.0	8.8	14.1	8.8	15.0	8.7

kcal/h = kW x 860, Btu/h = kW x 3,412

F2. Cooling capacity with PUHY-P300-400YHM /PUHY-EP300, 400Y(S)HM PURY-P300-400YHM /PURY-EP300, 400Y(S)HM

PLFY-P-VCM-E

CA : Capacity(kW) SHC : Sensible Heat Capacity(kW)

Model size (Rated kW)	Outdoor air temp.		Indoor air temp.													
			71 ˚FDB / 59˚FWB		73˚FDB / 61˚FWB		77˚FDB / 64˚FWB		81˚FDB / 66˚FWB		82˚FDB / 68˚FWB		86˚FDB / 72˚FWB		90˚FDB / 75˚FWB	
			21.5˚CDB / 15˚CWB		23˚CDB / 16˚CWB		25˚CDB / 18˚CWB		27˚CDB / 19˚CWB		28˚CDB / 20˚CWB		30˚CDB / 22˚CWB		32˚CDB / 24˚CWB	
	˚FDB	˚CDB	CA	SHC	CA	SHC	CA	SHC	CA	SHC	CA	SHC	CA	SHC	CA	SHC
20 (2.2)	68	20.0	2.1	1.8	2.2	1.9	2.4	1.9	2.5	1.9	2.5	2.0	2.7	2.0	2.9	1.9
	73	22.5	2.1	1.8	2.2	1.9	2.3	1.9	2.4	1.9	2.5	2.0	2.6	1.9	2.8	1.9
	77	25.0	2.1	1.8	2.2	1.8	2.3	1.8	2.4	1.9	2.4	2.0	2.6	1.9	2.8	1.9
	82	27.5	2.1	1.8	2.1	1.8	2.3	1.8	2.3	1.9	2.4	1.9	2.5	1.9	2.7	1.9
	86	30.0	2.0	1.8	2.1	1.8	2.2	1.8	2.3	1.8	2.4	1.9	2.5	1.9	2.6	1.9
	91	32.5	2.0	1.7	2.0	1.8	2.2	1.8	2.2	1.8	2.3	1.9	2.4	1.9	2.6	1.9
	95	35.0	2.0	1.7	2.0	1.8	2.1	1.8	2.2	1.8	2.3	1.9	2.4	1.9	2.5	1.8
	100	37.5	1.9	1.7	1.9	1.8	2.1	1.7	2.1	1.8	2.2	1.9	2.4	1.8	2.5	1.8
	104	40.0	1.9	1.7	1.9	1.7	2.0	1.7	2.1	1.8	2.4	1.9	2.3	1.8	2.4	1.8
	110	43.0	1.8	1.7	1.8	1.7	2.0	1.7	2.0	1.8	2.1	1.8	2.2	1.8	2.4	1.8
25 (2.8)	68	20.0	2.7	2.2	2.8	2.2	3.0	2.2	3.1	2.3	3.2	2.4	3.4	2.3	3.6	2.3
	73	22.5	2.7	2.2	2.8	2.2	3.0	2.2	3.1	2.3	3.2	2.4	3.4	2.3	3.6	2.3
	77	25.0	2.7	2.1	2.7	2.2	2.9	2.2	3.0	2.2	3.1	2.3	3.3	2.3	3.5	2.3
	82	27.5	2.6	2.1	2.7	2.2	2.9	2.2	3.0	2.2	3.1	2.3	3.2	2.3	3.4	2.2
	86	30.0	2.6	2.1	2.6	2.2	2.8	2.1	2.9	2.2	3.0	2.3	3.2	2.3	3.4	2.2
	91	32.5	2.5	2.1	2.6	2.1	2.8	2.1	2.9	2.2	2.9	2.3	3.1	2.2	3.3	2.2
	95	35.0	2.5	2.1	2.5	2.1	2.7	2.1	2.8	2.1	2.9	2.2	3.1	2.2	3.2	2.2
	100	37.5	2.5	2.0	2.5	2.1	2.6	2.1	2.7	2.1	2.8	2.2	3.0	2.2	3.2	2.2
	104	40.0	2.4	2.0	2.4	2.1	2.6	2.1	2.7	2.1	3.0	2.3	2.9	2.2	3.1	2.1
	110	43.0	2.4	2.0	2.4	2.0	2.5	2.0	2.6	2.1	2.7	2.2	2.8	2.1	3.0	2.1
32 (3.6)	68	20.0	3.5	2.6	3.6	2.7	3.9	2.7	4.0	2.8	4.2	2.9	4.4	2.8	4.7	2.8
	73	22.5	3.5	2.6	3.6	2.7	3.8	2.7	4.0	2.7	4.1	2.9	4.3	2.8	4.6	2.8
	77	25.0	3.4	2.6	3.5	2.7	3.8	2.7	3.9	2.7	4.0	2.8	4.2	2.8	4.5	2.7
	82	27.5	3.4	2.6	3.5	2.7	3.7	2.6	3.8	2.7	3.9	2.8	4.2	2.8	4.4	2.7
	86	30.0	3.3	2.6	3.4	2.6	3.6	2.6	3.7	2.7	3.9	2.8	4.1	2.7	4.3	2.7
	91	32.5	3.3	2.5	3.3	2.6	3.5	2.6	3.7	2.6	3.8	2.7	4.0	2.7	4.2	2.6
	95	35.0	3.2	2.5	3.3	2.6	3.5	2.5	3.6	2.6	3.7	2.7	3.9	2.7	4.2	2.6
	100	37.5	3.2	2.5	3.2	2.5	3.4	2.5	3.5	2.6	3.6	2.7	3.9	2.6	4.1	2.6
	104	40.0	3.1	2.5	3.1	2.5	3.3	2.5	3.4	2.5	3.9	2.8	3.8	2.6	4.0	2.6
	110	43.0	3.0	2.4	3.0	2.5	3.2	2.4	3.3	2.5	3.4	2.6	3.7	2.6	3.9	2.5
40 (4.5)	68	20.0	4.4	3.1	4.5	3.2	4.9	3.2	5.0	3.2	5.2	3.3	5.5	3.3	5.9	3.3
	73	22.5	4.3	3.1	4.5	3.2	4.8	3.2	5.0	3.2	5.1	3.3	5.4	3.3	5.7	3.2
	77	25.0	4.3	3.1	4.4	3.1	4.7	3.1	4.9	3.1	5.0	3.3	5.3	3.2	5.6	3.2
	82	27.5	4.2	3.0	4.3	3.1	4.6	3.1	4.8	3.1	4.9	3.2	5.2	3.2	5.5	3.1
	86	30.0	4.1	3.0	4.2	3.0	4.5	3.0	4.7	3.1	4.8	3.2	5.1	3.1	5.4	3.1
	91	32.5	4.1	2.9	4.2	3.0	4.4	3.0	4.6	3.0	4.7	3.1	5.0	3.1	5.3	3.0
	95	35.0	4.0	2.9	4.1	3.0	4.3	2.9	4.5	3.0	4.6	3.1	4.9	3.1	5.2	3.0
	100	37.5	4.0	2.9	4.0	2.9	4.3	2.9	4.4	2.9	4.5	3.1	4.8	3.0	5.1	3.0
	104	40.0	3.9	2.9	3.9	2.9	4.2	2.9	4.3	2.9	4.9	3.2	4.7	3.0	5.0	2.9
	110	43.0	3.8	2.8	3.8	2.8	4.1	2.8	4.2	2.9	4.3	3.0	4.6	2.9	4.8	2.9

kcal/h = kW x 860, Btu/h = kW x 3,412

CT

F2. Cooling capacity with PUHY-P300-400YHM /PUHY-EP300, 400Y(S)HM PURY-P300-400YHM /PURY-EP300, 400Y(S)HM

PLFY-P-VBM-E

CA : Capacity(kW) SHC : Sensible Heat Capacity(kW)

Model size (Rated kW)	Outdoor air temp.		Indoor air temp.													
			71 ˚FDB / 59˚FWB		73˚FDB / 61˚FWB		77˚FDB / 64˚FWB		81˚FDB / 66˚FWB		82˚FDB / 68˚FWB		86˚FDB / 72˚FWB		90˚FDB / 75˚FWB	
			21.5˚CDB / 15˚CWB		23˚CDB / 16˚CWB		25˚CDB / 18˚CWB		27˚CDB / 19˚CWB		28˚CDB / 20˚CWB		30˚CDB / 22˚CWB		32˚CDB / 24˚CWB	
	˚FDB	˚CDB	CA	SHC	CA	SHC	CA	SHC	CA	SHC	CA	SHC	CA	SHC	CA	SHC
32 (3.6)	68	20.0	3.5	2.9	3.6	3.0	3.9	3.0	4.0	3.2	4.2	3.2	4.4	3.1	4.7	3.1
	73	22.5	3.5	2.9	3.6	3.0	3.8	2.9	4.0	3.1	4.1	3.1	4.3	3.1	4.6	3.0
	77	25.0	3.4	2.8	3.5	2.9	3.8	2.9	3.9	3.1	4.0	3.1	4.2	3.1	4.5	3.0
	82	27.5	3.4	2.8	3.5	2.9	3.7	2.9	3.8	3.1	3.9	3.1	4.2	3.0	4.4	3.0
	86	30.0	3.3	2.8	3.4	2.9	3.6	2.9	3.7	3.1	3.9	3.0	4.1	3.0	4.3	3.0
	91	32.5	3.3	2.8	3.3	2.8	3.5	2.8	3.7	3.0	3.8	3.0	4.0	3.0	4.2	2.9
	95	35.0	3.2	2.7	3.3	2.8	3.5	2.8	3.6	3.0	3.7	3.0	3.9	2.9	4.2	2.9
	100	37.5	3.2	2.7	3.2	2.8	3.4	2.8	3.5	3.0	3.6	3.0	3.9	2.9	4.1	2.9
	104	40.0	3.1	2.7	3.1	2.8	3.3	2.7	3.4	2.9	3.9	3.1	3.8	2.9	4.0	2.8
	110	43.0	3.0	2.7	3.0	2.7	3.2	2.7	3.3	2.9	3.4	2.9	3.7	2.9	3.9	2.8
40 (4.5)	68	20.0	4.4	3.5	4.5	3.6	4.9	3.6	5.0	3.9	5.2	3.8	5.5	3.8	5.9	3.7
	73	22.5	4.3	3.5	4.5	3.6	4.8	3.6	5.0	3.8	5.1	3.8	5.4	3.8	5.7	3.7
	77	25.0	4.3	3.5	4.4	3.6	4.7	3.5	4.9	3.8	5.0	3.8	5.3	3.7	5.6	3.7
	82	27.5	4.2	3.4	4.3	3.5	4.6	3.5	4.8	3.7	4.9	3.7	5.2	3.7	5.5	3.6
	86	30.0	4.1	3.4	4.2	3.5	4.5	3.5	4.7	3.7	4.8	3.7	5.1	3.6	5.4	3.6
	91	32.5	4.1	3.4	4.2	3.5	4.4	3.4	4.6	3.7	4.7	3.7	5.0	3.6	5.3	3.5
	95	35.0	4.0	3.3	4.1	3.4	4.3	3.4	4.5	3.6	4.6	3.6	4.9	3.6	5.2	3.5
	100	37.5	4.0	3.3	4.0	3.4	4.3	3.4	4.4	3.6	4.5	3.6	4.8	3.5	5.1	3.5
	104	40.0	3.9	3.3	3.9	3.3	4.2	3.3	4.3	3.6	4.9	3.7	4.7	3.5	5.0	3.4
	110	43.0	3.8	3.2	3.8	3.3	4.1	3.3	4.2	3.5	4.3	3.5	4.6	3.4	4.8	3.4
50 (5.6)	68	20.0	5.4	4.0	5.6	4.2	6.0	4.2	6.3	4.4	6.5	4.4	6.9	4.3	7.3	4.3
	73	22.5	5.4	4.0	5.6	4.2	6.0	4.1	6.2	4.4	6.4	4.4	6.7	4.3	7.1	4.2
	77	25.0	5.3	4.0	5.5	4.1	5.9	4.1	6.0	4.3	6.2	4.3	6.6	4.3	7.0	4.2
	82	27.5	5.2	4.0	5.4	4.1	5.7	4.0	5.9	4.3	6.1	4.3	6.5	4.2	6.9	4.1
	86	30.0	5.2	3.9	5.3	4.0	5.6	4.0	5.8	4.2	6.0	4.2	6.4	4.2	6.7	4.1
	91	32.5	5.1	3.9	5.2	4.0	5.5	3.9	5.7	4.2	5.9	4.2	6.2	4.1	6.6	4.0
	95	35.0	5.0	3.8	5.1	3.9	5.4	3.9	5.6	4.1	5.8	4.1	6.1	4.1	6.5	4.0
	100	37.5	4.9	3.8	5.0	3.9	5.3	3.8	5.5	4.1	5.7	4.1	6.0	4.0	6.3	3.9
	104	40.0	4.8	3.8	4.8	3.8	5.2	3.8	5.3	4.0	6.1	4.2	5.9	4.0	6.2	3.9
	110	43.0	4.7	3.7	4.7	3.7	5.0	3.7	5.2	4.0	5.3	3.9	5.7	3.9	6.0	3.8
63 (7.1)	68	20.0	6.9	5.0	7.1	5.1	7.7	5.1	8.0	5.4	8.2	5.4	8.7	5.3	9.2	5.3
	73	22.5	6.9	5.0	7.1	5.1	7.6	5.1	7.8	5.4	8.1	5.3	8.5	5.3	9.1	5.2
	77	25.0	6.8	4.9	7.0	5.0	7.4	5.0	7.7	5.3	7.9	5.3	8.4	5.2	8.9	5.1
	82	27.5	6.6	4.9	6.8	5.0	7.3	5.0	7.5	5.2	7.8	5.2	8.2	5.1	8.7	5.1
	86	30.0	6.5	4.8	6.7	4.9	7.1	4.9	7.4	5.2	7.6	5.1	8.1	5.1	8.5	5.0
	91	32.5	6.4	4.8	6.6	4.9	7.0	4.8	7.2	5.1	7.5	5.1	7.9	5.0	8.4	4.9
	95	35.0	6.3	4.7	6.4	4.8	6.8	4.7	7.1	5.1	7.3	5.0	7.7	4.9	8.2	4.9
	100	37.5	6.2	4.7	6.3	4.7	6.7	4.7	6.9	5.0	7.2	5.0	7.6	4.9	8.0	4.8
	104	40.0	6.1	4.6	6.1	4.7	6.6	4.6	6.8	4.9	7.7	5.2	7.4	4.8	7.8	4.7
	110	43.0	6.0	4.5	6.0	4.6	6.4	4.6	6.6	4.8	6.8	4.8	7.2	4.7	7.6	4.7
80 (9.0)	68	20.0	8.7	6.2	9.0	6.4	9.7	6.4	10.1	6.7	10.4	6.7	11.0	6.6	11.7	6.5
	73	22.5	8.7	6.2	9.0	6.4	9.6	6.3	9.9	6.7	10.2	6.6	10.8	6.5	11.5	6.4
	77	25.0	8.6	6.1	8.8	6.3	9.4	6.2	9.7	6.6	10.0	6.5	10.6	6.5	11.3	6.4
	82	27.5	8.4	6.0	8.6	6.2	9.2	6.2	9.5	6.5	9.8	6.5	10.4	6.4	11.0	6.3
	86	30.0	8.3	6.0	8.5	6.1	9.0	6.1	9.4	6.4	9.6	6.4	10.3	6.3	10.8	6.2
	91	32.5	8.1	5.9	8.3	6.0	8.9	6.0	9.2	6.3	9.5	6.3	10.0	6.2	10.6	6.1
	95	35.0	8.0	5.8	8.1	5.9	8.6	5.9	9.0	6.3	9.3	6.2	9.8	6.1	10.4	6.0
	100	37.5	7.9	5.8	8.0	5.9	8.5	5.8	8.8	6.2	9.1	6.1	9.6	6.1	10.2	6.0
	104	40.0	7.8	5.7	7.8	5.8	8.3	5.7	8.6	6.1	9.8	6.4	9.4	6.0	9.9	5.9
	110	43.0	7.6	5.6	7.6	5.7	8.1	5.6	8.4	6.0	8.6	5.9	9.1	5.9	9.7	5.8
100 (11.2)	68	20.0	10.9	7.8	11.3	8.0	12.1	8.0	12.5	8.4	12.9	8.4	13.7	8.3	14.6	8.2
	73	22.5	10.8	7.7	11.2	8.0	11.9	7.9	12.3	8.3	12.7	8.3	13.5	8.2	14.3	8.1
	77	25.0	10.7	7.7	11.0	7.9	11.7	7.8	12.1	8.2	12.5	8.2	13.2	8.1	14.0	8.0
	82	27.5	10.5	7.6	10.8	7.7	11.5	7.7	11.9	8.1	12.2	8.1	13.0	8.0	13.7	7.8
	86	30.0	10.3	7.5	10.5	7.6	11.3	7.6	11.6	8.0	12.0	8.0	12.8	7.9	13.4	7.7
	91	32.5	10.1	7.4	10.4	7.6	11.0	7.5	11.4	7.9	11.8	7.9	12.4	7.8	13.2	7.7
	95	35.0	10.0	7.3	10.1	7.4	10.8	7.4	11.2	7.8	11.5	7.8	12.2	7.7	12.9	7.6
	100	37.5	9.9	7.2	9.9	7.3	10.6	7.3	10.9	7.7	11.3	7.7	12.0	7.6	12.7	7.5
	104	40.0	9.7	7.2	9.7	7.2	10.4	7.2	10.7	7.6	12.2	8.1	11.7	7.5	12.4	7.4
	110	43.0	9.4	7.0	9.4	7.1	10.1	7.1	10.4	7.5	10.7	7.4	11.4	7.3	12.0	7.2
125 (14.0)	68	20.0	13.6	9.5	14.1	9.7	15.1	9.7	15.7	10.3	16.2	10.2	17.2	10.1	18.2	9.9
	73	22.5	13.5	9.4	14.0	9.7	14.9	9.6	15.4	10.1	15.9	10.1	16.8	9.9	17.9	9.8
	77	25.0	13.4	9.4	13.7	9.6	14.6	9.5	15.1	10.0	15.6	9.9	16.5	9.8	17.5	9.6
	82	27.5	13.1	9.2	13.4	9.4	14.4	9.4	14.8	9.9	15.3	9.8	16.2	9.7	17.2	9.5
	86	30.0	12.9	9.1	13.2	9.3	14.1	9.2	14.6	9.7	15.0	9.7	16.0	9.6	16.8	9.4
	91	32.5	12.7	9.0	13.0	9.2	13.8	9.1	14.3	9.6	14.7	9.5	15.5	9.4	16.5	9.2
	95	35.0	12.5	8.9	12.7	9.0	13.4	8.9	14.0	9.5	14.4	9.4	15.3	9.3	16.2	9.1
	100	37.5	12.3	8.8	12.4	8.9	13.2	8.8	13.7	9.3	14.1	9.3	15.0	9.2	15.8	9.0
	104	40.0	12.1	8.7	12.1	8.7	13.0	8.7	13.4	9.2	15.2	9.8	14.6	9.0	15.5	8.9
	110	43.0	11.8	8.5	11.8	8.6	12.6	8.5	13.0	9.0	13.4	9.0	14.2	8.8	15.1	8.7

kcal/h = kW x 860, Btu/h = kW x 3,412

F3. Cooling capacity with PUHY-P450-650Y(S)HM/PUHY-EP450-650YSHM PURY-P450-650YSHM/PURY-EP450-600YSHM

PLFY-P-VCM-E

CA : Capacity(kW) SHC : Sensible Heat Capacity(kW)

Model size (Rated kW)	Outdoor air temp.		Indoor air temp.													
			71 ˚FDB / 59˚FWB		73˚FDB / 61˚FWB		77˚FDB / 64˚FWB		81˚FDB / 66˚FWB		82˚FDB / 68˚FWB		86˚FDB / 72˚FWB		90˚FDB / 75˚FWB	
			21.5˚CDB / 15˚CWB		23˚CDB / 16˚CWB		25˚CDB / 18˚CWB		27˚CDB / 19˚CWB		28˚CDB / 20˚CWB		30˚CDB / 22˚CWB		32˚CDB / 24˚CWB	
	˚FDB	˚CDB	CA	SHC	CA	SHC	CA	SHC	CA	SHC	CA	SHC	CA	SHC	CA	SHC
20 (2.2)	68	20.0	2.1	1.8	2.1	1.8	2.3	1.8	2.4	1.9	2.5	2.0	2.6	1.9	2.8	1.9
	73	22.5	2.1	1.8	2.1	1.8	2.3	1.8	2.3	1.9	2.4	1.9	2.6	1.9	2.7	1.9
	77	25.0	2.0	1.8	2.1	1.8	2.2	1.8	2.3	1.9	2.4	1.9	2.6	1.9	2.7	1.9
	82	27.5	2.0	1.8	2.1	1.8	2.2	1.8	2.3	1.8	2.4	1.9	2.5	1.9	2.6	1.9
	86	30.0	2.0	1.7	2.0	1.8	2.2	1.8	2.3	1.8	2.4	1.9	2.5	1.9	2.7	1.9
	91	32.5	2.0	1.7	2.0	1.8	2.2	1.8	2.2	1.8	2.3	1.9	2.5	1.9	2.6	1.9
	95	35.0	2.0	1.7	2.0	1.8	2.1	1.8	2.2	1.8	2.3	1.9	2.5	1.9	2.6	1.9
	100	37.5	1.9	1.7	2.0	1.8	2.1	1.8	2.2	1.8	2.3	1.9	2.4	1.9	2.6	1.9
	104	40.0	1.9	1.7	1.9	1.8	2.1	1.8	2.1	1.8	2.2	1.9	2.4	1.9	2.6	1.8
	110	43.0	1.9	1.7	1.9	1.7	2.1	1.7	2.1	1.8	2.2	1.9	2.4	1.9	2.6	1.8
25 (2.8)	68	20.0	2.6	2.1	2.7	2.2	2.9	2.2	3.0	2.2	3.1	2.3	3.3	2.3	3.5	2.3
	73	22.5	2.6	2.1	2.7	2.2	2.9	2.2	3.0	2.2	3.1	2.3	3.3	2.3	3.5	2.3
	77	25.0	2.6	2.1	2.7	2.2	2.9	2.2	2.9	2.2	3.1	2.3	3.2	2.3	3.5	2.2
	82	27.5	2.6	2.1	2.6	2.2	2.8	2.2	2.9	2.2	3.0	2.3	3.2	2.3	3.4	2.2
	86	30.0	2.5	2.1	2.6	2.1	2.8	2.1	2.9	2.2	3.0	2.3	3.2	2.3	3.4	2.2
	91	32.5	2.5	2.1	2.6	2.1	2.7	2.1	2.8	2.2	3.0	2.3	3.2	2.2	3.4	2.2
	95	35.0	2.5	2.1	2.5	2.1	2.7	2.1	2.8	2.1	2.9	2.2	3.1	2.2	3.3	2.2
	100	37.5	2.5	2.0	2.5	2.1	2.7	2.1	2.8	2.1	2.9	2.2	3.1	2.2	3.3	2.2
	104	40.0	2.4	2.0	2.5	2.1	2.7	2.1	2.7	2.1	2.9	2.2	3.1	2.2	3.3	2.2
	110	43.0	2.4	2.0	2.5	2.1	2.6	2.1	2.7	2.1	2.8	2.2	3.0	2.2	3.2	2.2
32 (3.6)	68	20.0	3.4	2.6	3.5	2.7	3.7	2.7	3.9	2.7	4.0	2.8	4.2	2.8	4.5	2.8
	73	22.5	3.4	2.6	3.5	2.7	3.7	2.6	3.8	2.7	4.0	2.8	4.2	2.8	4.5	2.7
	77	25.0	3.3	2.6	3.4	2.6	3.7	2.6	3.8	2.7	3.9	2.8	4.2	2.8	4.4	2.7
	82	27.5	3.3	2.6	3.4	2.6	3.6	2.6	3.7	2.7	3.9	2.8	4.1	2.7	4.3	2.7
	86	30.0	3.3	2.5	3.3	2.6	3.6	2.6	3.7	2.6	3.9	2.8	4.1	2.7	4.4	2.7
	91	32.5	3.2	2.5	3.3	2.6	3.5	2.6	3.6	2.6	3.8	2.7	4.1	2.7	4.3	2.7
	95	35.0	3.2	2.5	3.3	2.6	3.5	2.6	3.6	2.6	3.7	2.7	4.0	2.7	4.3	2.7
	100	37.5	3.2	2.5	3.2	2.5	3.5	2.5	3.5	2.6	3.7	2.7	4.0	2.7	4.2	2.6
	104	40.0	3.1	2.5	3.2	2.5	3.4	2.5	3.5	2.6	3.7	2.7	4.0	2.7	4.2	2.6
	110	43.0	3.1	2.5	3.2	2.5	3.4	2.5	3.5	2.5	3.6	2.7	3.9	2.6	4.2	2.6
40 (4.5)	68	20.0	4.3	3.0	4.4	3.1	4.7	3.1	4.8	3.1	5.0	3.3	5.3	3.2	5.7	3.2
	73	22.5	4.2	3.0	4.3	3.1	4.6	3.1	4.8	3.1	5.0	3.2	5.3	3.2	5.6	3.2
	77	25.0	4.2	3.0	4.3	3.1	4.6	3.1	4.7	3.1	4.9	3.2	5.2	3.2	5.6	3.1
	82	27.5	4.1	3.0	4.2	3.0	4.5	3.0	4.7	3.1	4.9	3.2	5.2	3.2	5.4	3.1
	86	30.0	4.1	3.0	4.2	3.0	4.5	3.0	4.6	3.0	4.8	3.2	5.1	3.1	5.4	3.1
	91	32.5	4.1	2.9	4.1	3.0	4.4	3.0	4.5	3.0	4.8	3.2	5.1	3.1	5.4	3.1
	95	35.0	4.0	2.9	4.1	3.0	4.4	3.0	4.5	3.0	4.7	3.1	5.0	3.1	5.4	3.1
	100	37.5	4.0	2.9	4.0	2.9	4.3	2.9	4.4	3.0	4.7	3.1	5.0	3.1	5.3	3.0
	104	40.0	3.9	2.9	4.0	2.9	4.3	2.9	4.4	2.9	4.6	3.1	5.0	3.1	5.3	3.0
	110	43.0	3.9	2.8	3.9	2.9	4.2	2.9	4.3	2.9	4.5	3.1	4.9	3.0	5.2	3.0

kcal/h = kW x 860, Btu/h = kW x 3,412

CT

F3. Cooling capacity with PUHY-P450-650Y(S)HM/PUHY-EP450-650YSHM PURY-P450-650YSHM/PURY-EP450-600YSHM

PLFY-P-VBM-E

CA : Capacity(kW) SHC : Sensible Heat Capacity(kW)

Model size (Rated kW)	Outdoor air temp.		Indoor air temp.													
			71 ˚FDB / 59˚FWB		73˚FDB / 61˚FWB		77˚FDB / 64˚FWB		81˚FDB / 66˚FWB		82˚FDB / 68˚FWB		86˚FDB / 72˚FWB		90˚FDB / 75˚FWB	
			21.5˚CDB / 15˚CWB		23˚CDB / 16˚CWB		25˚CDB / 18˚CWB		27˚CDB / 19˚CWB		28˚CDB / 20˚CWB		30˚CDB / 22˚CWB		32˚CDB / 24˚CWB	
	˚FDB	˚CDB	CA	SHC	CA	SHC	CA	SHC	CA	SHC	CA	SHC	CA	SHC	CA	SHC
32 (3.6)	68	20.0	3.4	2.8	3.5	2.9	3.7	2.9	3.9	3.1	4.0	3.1	4.2	3.1	4.5	3.0
	73	22.5	3.4	2.8	3.5	2.9	3.7	2.9	3.8	3.1	4.0	3.1	4.2	3.1	4.5	3.0
	77	25.0	3.3	2.8	3.4	2.9	3.7	2.9	3.8	3.1	3.9	3.1	4.2	3.0	4.4	3.0
	82	27.5	3.3	2.8	3.4	2.9	3.6	2.9	3.7	3.1	3.9	3.1	4.1	3.0	4.3	3.0
	86	30.0	3.3	2.8	3.3	2.9	3.6	2.8	3.7	3.0	3.9	3.0	4.1	3.0	4.4	3.0
	91	32.5	3.2	2.8	3.3	2.8	3.5	2.8	3.6	3.0	3.8	3.0	4.1	3.0	4.3	3.0
	95	35.0	3.2	2.7	3.3	2.8	3.5	2.8	3.6	3.0	3.7	3.0	4.0	3.0	4.3	2.9
	100	37.5	3.2	2.7	3.2	2.8	3.5	2.8	3.5	3.0	3.7	3.0	4.0	3.0	4.2	2.9
	104	40.0	3.1	2.7	3.2	2.8	3.4	2.8	3.5	3.0	3.7	3.0	4.0	3.0	4.2	2.9
	110	43.0	3.1	2.7	3.2	2.8	3.4	2.8	3.5	2.9	3.6	3.0	3.9	2.9	4.2	2.9
40 (4.5)	68	20.0	4.3	3.4	4.4	3.6	4.7	3.5	4.8	3.8	5.0	3.8	5.3	3.7	5.7	3.7
	73	22.5	4.2	3.4	4.3	3.5	4.6	3.5	4.8	3.7	5.0	3.7	5.3	3.7	5.6	3.7
	77	25.0	4.2	3.4	4.3	3.5	4.6	3.5	4.7	3.7	4.9	3.7	5.2	3.7	5.6	3.6
	82	27.5	4.1	3.4	4.2	3.5	4.5	3.5	4.7	3.7	4.9	3.7	5.2	3.7	5.4	3.6
	86	30.0	4.1	3.4	4.2	3.5	4.5	3.5	4.6	3.7	4.8	3.7	5.1	3.6	5.4	3.6
	91	32.5	4.1	3.3	4.1	3.4	4.4	3.4	4.5	3.7	4.8	3.7	5.1	3.6	5.4	3.6
	95	35.0	4.0	3.3	4.1	3.4	4.4	3.4	4.5	3.6	4.7	3.6	5.0	3.6	5.4	3.6
	100	37.5	4.0	3.3	4.0	3.4	4.3	3.4	4.4	3.6	4.7	3.6	5.0	3.6	5.3	3.6
	104	40.0	3.9	3.3	4.0	3.4	4.3	3.4	4.4	3.6	4.6	3.6	5.0	3.6	5.3	3.5
	110	43.0	3.9	3.3	3.9	3.4	4.2	3.3	4.3	3.6	4.5	3.6	4.9	3.6	5.2	3.5
50 (5.6)	68	20.0	5.3	4.0	5.5	4.1	5.8	4.1	6.0	4.3	6.2	4.3	6.6	4.3	7.1	4.2
	73	22.5	5.3	4.0	5.4	4.1	5.8	4.0	5.9	4.3	6.2	4.3	6.6	4.2	7.0	4.2
	77	25.0	5.2	3.9	5.3	4.0	5.7	4.0	5.9	4.3	6.1	4.3	6.5	4.2	6.9	4.2
	82	27.5	5.2	3.9	5.3	4.0	5.7	4.0	5.8	4.2	6.0	4.2	6.4	4.2	6.7	4.1
	86	30.0	5.1	3.9	5.2	4.0	5.6	4.0	5.8	4.2	6.0	4.2	6.4	4.2	6.8	4.1
	91	32.5	5.0	3.9	5.2	4.0	5.5	3.9	5.7	4.2	5.9	4.2	6.3	4.1	6.7	4.1
	95	35.0	5.0	3.8	5.1	3.9	5.5	3.9	5.6	4.1	5.8	4.1	6.3	4.1	6.7	4.1
	100	37.5	4.9	3.8	5.0	3.9	5.4	3.9	5.5	4.1	5.8	4.1	6.2	4.1	6.6	4.0
	104	40.0	4.8	3.8	5.0	3.9	5.3	3.9	5.4	4.1	5.7	4.1	6.2	4.1	6.6	4.0
	110	43.0	4.8	3.7	4.9	3.8	5.3	3.8	5.4	4.0	5.7	4.1	6.0	4.0	6.5	4.0
63 (7.1)	68	20.0	6.7	4.9	6.9	5.0	7.4	5.0	7.6	5.3	7.9	5.3	8.4	5.2	8.9	5.1
	73	22.5	6.7	4.9	6.9	5.0	7.3	5.0	7.5	5.2	7.8	5.2	8.3	5.2	8.8	5.1
	77	25.0	6.6	4.8	6.8	5.0	7.2	4.9	7.5	5.2	7.7	5.2	8.2	5.1	8.8	5.1
	82	27.5	6.5	4.8	6.7	4.9	7.2	4.9	7.4	5.2	7.7	5.2	8.2	5.1	8.5	5.0
	86	30.0	6.5	4.8	6.6	4.9	7.1	4.9	7.3	5.1	7.6	5.1	8.1	5.1	8.6	5.0
	91	32.5	6.4	4.7	6.5	4.8	7.0	4.8	7.2	5.1	7.5	5.1	8.0	5.1	8.5	5.0
	95	35.0	6.3	4.7	6.4	4.8	6.9	4.8	7.1	5.1	7.4	5.1	8.0	5.0	8.4	5.0
	100	37.5	6.2	4.7	6.4	4.8	6.8	4.7	7.0	5.0	7.3	5.0	7.8	5.0	8.4	4.9
	104	40.0	6.1	4.6	6.3	4.7	6.8	4.7	6.9	5.0	7.2	5.0	7.8	5.0	8.3	4.9
	110	43.0	6.1	4.6	6.2	4.7	6.7	4.7	6.8	4.9	7.2	5.0	7.7	4.9	8.2	4.9
80 (9.0)	68	20.0	8.5	6.1	8.8	6.3	9.4	6.2	9.6	6.5	10.0	6.6	10.6	6.5	11.3	6.4
	73	22.5	8.5	6.1	8.7	6.2	9.3	6.2	9.5	6.5	9.9	6.5	10.6	6.4	11.2	6.3
	77	25.0	8.4	6.0	8.6	6.2	9.2	6.1	9.5	6.5	9.8	6.5	10.4	6.4	11.1	6.3
	82	27.5	8.3	6.0	8.5	6.1	9.1	6.1	9.4	6.4	9.7	6.4	10.4	6.3	10.8	6.2
	86	30.0	8.2	5.9	8.4	6.1	9.0	6.1	9.3	6.4	9.6	6.4	10.3	6.3	10.9	6.2
	91	32.5	8.1	5.9	8.3	6.0	8.8	6.0	9.1	6.3	9.5	6.3	10.2	6.3	10.8	6.2
	95	35.0	8.0	5.8	8.1	5.9	8.8	5.9	9.0	6.3	9.4	6.3	10.1	6.2	10.7	6.2
	100	37.5	7.9	5.8	8.1	5.9	8.6	5.9	8.9	6.2	9.3	6.2	9.9	6.2	10.6	6.1
	104	40.0	7.8	5.7	8.0	5.9	8.6	5.9	8.7	6.1	9.2	6.2	9.9	6.2	10.5	6.1
	110	43.0	7.7	5.7	7.9	5.8	8.5	5.8	8.6	6.1	9.1	6.1	9.7	6.1	10.4	6.0
100 (11.2)	68	20.0	10.6	7.6	10.9	7.8	11.6	7.8	12.0	8.2	12.5	8.2	13.2	8.1	14.1	8.0
	73	22.5	10.5	7.6	10.8	7.8	11.5	7.7	11.9	8.1	12.3	8.1	13.2	8.1	13.9	7.9
	77	25.0	10.4	7.5	10.7	7.7	11.4	7.7	11.8	8.1	12.2	8.1	13.0	8.0	13.8	7.9
	82	27.5	10.3	7.5	10.5	7.6	11.3	7.6	11.6	8.0	12.1	8.0	12.9	7.9	13.4	7.7
	86	30.0	10.2	7.4	10.4	7.6	11.2	7.6	11.5	8.0	12.0	8.0	12.8	7.9	13.6	7.8
	91	32.5	10.1	7.4	10.3	7.5	11.0	7.5	11.3	7.9	11.9	7.9	12.7	7.9	13.4	7.7
	95	35.0	10.0	7.3	10.1	7.4	10.9	7.4	11.2	7.8	11.6	7.8	12.5	7.8	13.3	7.7
	100	37.5	9.9	7.2	10.0	7.4	10.8	7.4	11.0	7.8	11.6	7.8	12.4	7.7	13.2	7.7
	104	40.0	9.7	7.2	9.9	7.3	10.7	7.3	10.9	7.7	11.4	7.7	12.3	7.7	13.1	7.6
	110	43.0	9.6	7.1	9.8	7.3	10.5	7.3	10.8	7.6	11.3	7.7	12.1	7.6	13.0	7.6
125 (14.0)	68	20.0	13.2	9.3	13.7	9.5	14.6	9.5	15.0	9.9	15.6	9.9	16.5	9.8	17.6	9.7
	73	22.5	13.2	9.2	13.5	9.4	14.4	9.4	14.8	9.9	15.4	9.9	16.5	9.8	17.4	9.6
	77	25.0	13.0	9.2	13.4	9.4	14.3	9.3	14.7	9.8	15.3	9.8	16.2	9.7	17.3	9.6
	82	27.5	12.9	9.1	13.2	9.3	14.1	9.3	14.6	9.7	15.1	9.7	16.1	9.6	16.8	9.4
	86	30.0	12.7	9.0	13.0	9.2	14.0	9.2	14.4	9.7	15.0	9.7	16.0	9.6	16.9	9.4
	91	32.5	12.6	8.9	12.9	9.1	13.7	9.1	14.1	9.5	14.8	9.6	15.8	9.5	16.8	9.4
	95	35.0	12.5	8.9	12.7	9.0	13.7	9.0	14.0	9.5	14.6	9.5	15.7	9.4	16.7	9.3
	100	37.5	12.3	8.8	12.6	9.0	13.4	8.9	13.8	9.4	14.5	9.4	15.5	9.4	16.5	9.3
	104	40.0	12.1	8.7	12.4	8.9	13.4	8.9	13.6	9.3	14.3	9.4	15.4	9.3	16.4	9.2
	110	43.0	12.0	8.7	12.3	8.8	13.2	8.8	13.4	9.2	14.1	9.3	15.1	9.2	16.2	9.2

kcal/h = kW x 860, Btu/h = kW x 3,412

F4. Cooling capacity with PUHY-P700-800YSHM/PUHY-EP700-800YSHM PURY-P700-800YSHM

PLFY-P-VCM-E

CA : Capacity(kW) SHC : Sensible Heat Capacity(kW)

Model size (Rated kW)	Outdoor air temp.		Indoor air temp.													
			71 ˚FDB / 59˚FWB		73˚FDB / 61˚FWB		77˚FDB / 64˚FWB		81˚FDB / 66˚FWB		82˚FDB / 68˚FWB		86˚FDB / 72˚FWB		90˚FDB / 75˚FWB	
			21.5˚CDB / 15˚CWB		23˚CDB / 16˚CWB		25˚CDB / 18˚CWB		27˚CDB / 19˚CWB		28˚CDB / 20˚CWB		30˚CDB / 22˚CWB		32˚CDB / 24˚CWB	
	˚FDB	˚CDB	CA	SHC	CA	SHC	CA	SHC	CA	SHC	CA	SHC	CA	SHC	CA	SHC
20 (2.2)	68	20.0	2.1	1.8	2.2	1.9	2.4	1.9	2.4	1.9	2.5	2.0	2.7	2.0	2.9	1.9
	73	22.5	2.1	1.8	2.2	1.9	2.3	1.8	2.4	1.9	2.5	2.0	2.7	2.0	2.8	1.9
	77	25.0	2.1	1.8	2.1	1.8	2.3	1.8	2.4	1.9	2.4	2.0	2.6	1.9	2.8	1.9
	82	27.5	2.0	1.8	2.1	1.8	2.2	1.8	2.3	1.9	2.4	1.9	2.6	1.9	2.7	1.9
	86	30.0	2.0	1.7	2.1	1.8	2.2	1.8	2.3	1.8	2.4	1.9	2.5	1.9	2.7	1.9
	91	32.5	1.9	1.7	2.0	1.8	2.2	1.8	2.2	1.8	2.3	1.9	2.5	1.9	2.6	1.9
	95	35.0	1.9	1.7	2.0	1.8	2.1	1.8	2.2	1.8	2.3	1.9	2.4	1.9	2.6	1.8
	100	37.5	1.9	1.7	2.0	1.8	2.1	1.7	2.2	1.8	2.2	1.9	2.4	1.9	2.5	1.8
	104	40.0	1.8	1.7	1.9	1.7	2.0	1.7	2.1	1.8	2.2	1.9	2.3	1.8	2.5	1.8
	110	43.0	1.8	1.7	1.8	1.7	2.0	1.7	2.1	1.8	2.1	1.8	2.3	1.8	2.4	1.8
25 (2.8)	68	20.0	2.7	2.2	2.8	2.2	3.0	2.2	3.1	2.3	3.2	2.4	3.4	2.3	3.7	2.3
	73	22.5	2.7	2.1	2.8	2.2	3.0	2.2	3.1	2.3	3.2	2.3	3.4	2.3	3.6	2.3
	77	25.0	2.6	2.1	2.7	2.2	2.9	2.2	3.0	2.2	3.1	2.3	3.3	2.3	3.5	2.3
	82	27.5	2.6	2.1	2.7	2.2	2.9	2.2	3.0	2.2	3.1	2.3	3.3	2.3	3.5	2.3
	86	30.0	2.5	2.1	2.6	2.2	2.8	2.1	2.9	2.2	3.0	2.3	3.2	2.3	3.4	2.2
	91	32.5	2.5	2.1	2.6	2.1	2.7	2.1	2.8	2.2	2.9	2.3	3.1	2.2	3.3	2.2
	95	35.0	2.4	2.0	2.5	2.1	2.7	2.1	2.8	2.1	2.9	2.2	3.1	2.2	3.3	2.2
	100	37.5	2.4	2.0	2.5	2.1	2.6	2.1	2.7	2.1	2.8	2.2	3.0	2.2	3.2	2.2
	104	40.0	2.4	2.0	2.4	2.1	2.6	2.1	2.7	2.1	2.8	2.2	3.0	2.2	3.2	2.1
	110	43.0	2.3	2.0	2.4	2.0	2.5	2.0	2.6	2.1	2.7	2.2	2.9	2.1	3.1	2.1
32 (3.6)	68	20.0	3.5	2.6	3.6	2.7	3.9	2.7	4.0	2.8	4.1	2.9	4.4	2.9	4.7	2.8
	73	22.5	3.4	2.6	3.5	2.7	3.8	2.7	3.9	2.7	4.1	2.8	4.4	2.8	4.6	2.8
	77	25.0	3.4	2.6	3.5	2.7	3.7	2.7	3.9	2.7	4.0	2.8	4.2	2.8	4.5	2.8
	82	27.5	3.3	2.6	3.4	2.6	3.7	2.6	3.8	2.7	3.9	2.8	4.2	2.8	4.5	2.7
	86	30.0	3.2	2.5	3.4	2.6	3.6	2.6	3.7	2.6	3.9	2.8	4.1	2.7	4.4	2.7
	91	32.5	3.2	2.5	3.3	2.6	3.5	2.6	3.7	2.6	3.8	2.7	4.0	2.7	4.3	2.7
	95	35.0	3.1	2.5	3.2	2.6	3.5	2.5	3.6	2.6	3.7	2.7	4.0	2.7	4.2	2.6
	100	37.5	3.1	2.4	3.2	2.5	3.4	2.5	3.5	2.6	3.7	2.7	3.9	2.6	4.1	2.6
	104	40.0	3.0	2.4	3.1	2.5	3.3	2.5	3.5	2.5	3.6	2.6	3.8	2.6	4.1	2.6
	110	43.0	3.0	2.4	3.0	2.5	3.2	2.4	3.4	2.5	3.5	2.6	3.7	2.6	4.0	2.6
40 (4.5)	68	20.0	4.3	3.1	4.5	3.2	4.8	3.2	5.0	3.2	5.2	3.3	5.5	3.3	5.9	3.3
	73	22.5	4.3	3.0	4.4	3.1	4.7	3.1	4.9	3.2	5.1	3.3	5.4	3.3	5.8	3.2
	77	25.0	4.2	3.0	4.4	3.1	4.7	3.1	4.8	3.1	5.0	3.3	5.3	3.2	5.7	3.2
	82	27.5	4.1	3.0	4.3	3.1	4.6	3.1	4.7	3.1	4.9	3.2	5.2	3.2	5.6	3.1
	86	30.0	4.1	2.9	4.2	3.0	4.5	3.0	4.7	3.1	4.8	3.2	5.1	3.1	5.5	3.1
	91	32.5	4.0	2.9	4.1	3.0	4.4	3.0	4.6	3.0	4.7	3.1	5.0	3.1	5.4	3.1
	95	35.0	3.9	2.9	4.1	3.0	4.3	2.9	4.5	3.0	4.6	3.1	5.0	3.1	5.3	3.0
	100	37.5	3.8	2.8	4.0	2.9	4.3	2.9	4.4	3.0	4.6	3.1	4.9	3.0	5.2	3.0
	104	40.0	3.8	2.8	3.9	2.9	4.2	2.9	4.3	2.9	4.5	3.0	4.8	3.0	5.1	3.0
	110	43.0	3.7	2.8	3.8	2.8	4.1	2.8	4.2	2.9	4.4	3.0	4.7	3.0	5.0	2.9

kcal/h = kW x 860, Btu/h = kW x 3,412

CT

F4. Cooling capacity with PUHY-P700-800YSHM/PUHY-EP700-800YSHM PURY-P700-800YSHM

PLFY-P-VBM-E

CA : Capacity(kW) SHC : Sensible Heat Capacity(kW)

Model size (Rated kW)	Outdoor air temp.		Indoor air temp.													
			71 ˚FDB / 59˚FWB		73˚FDB / 61˚FWB		77˚FDB / 64˚FWB		81˚FDB / 66˚FWB		82˚FDB / 68˚FWB		86˚FDB / 72˚FWB		90˚FDB / 75˚FWB	
			21.5˚CDB / 15˚CWB		23˚CDB / 16˚CWB		25˚CDB / 18˚CWB		27˚CDB / 19˚CWB		28˚CDB / 20˚CWB		30˚CDB / 22˚CWB		32˚CDB / 24˚CWB	
	˚FDB	˚CDB	CA	SHC	CA	SHC	CA	SHC	CA	SHC	CA	SHC	CA	SHC	CA	SHC
32 (3.6)	68	20.0	3.5	2.9	3.6	3.0	3.9	3.0	4.0	3.2	4.1	3.2	4.4	3.1	4.7	3.1
	73	22.5	3.4	2.8	3.5	2.9	3.8	2.9	3.9	3.1	4.1	3.1	4.4	3.1	4.6	3.1
	77	25.0	3.4	2.8	3.5	2.9	3.7	2.9	3.9	3.1	4.0	3.1	4.2	3.1	4.5	3.0
	82	27.5	3.3	2.8	3.4	2.9	3.7	2.9	3.8	3.1	3.9	3.1	4.2	3.0	4.5	3.0
	86	30.0	3.2	2.8	3.4	2.9	3.6	2.8	3.7	3.1	3.9	3.0	4.1	3.0	4.4	3.0
	91	32.5	3.2	2.7	3.3	2.8	3.5	2.8	3.7	3.0	3.8	3.0	4.0	3.0	4.3	3.0
	95	35.0	3.1	2.7	3.2	2.8	3.5	2.8	3.6	3.0	3.7	3.0	4.0	3.0	4.2	2.9
	100	37.5	3.1	2.7	3.2	2.8	3.4	2.8	3.5	3.0	3.7	3.0	3.9	2.9	4.1	2.9
	104	40.0	3.0	2.7	3.1	2.7	3.3	2.7	3.5	2.9	3.6	2.9	3.8	2.9	4.1	2.9
	110	43.0	3.0	2.6	3.0	2.7	3.2	2.7	3.4	2.9	3.5	2.9	3.7	2.9	4.0	2.8
40 (4.5)	68	20.0	4.3	3.5	4.5	3.6	4.8	3.6	5.0	3.8	5.2	3.8	5.5	3.8	5.9	3.7
	73	22.5	4.3	3.5	4.4	3.6	4.7	3.6	4.9	3.8	5.1	3.8	5.4	3.8	5.8	3.7
	77	25.0	4.2	3.4	4.4	3.5	4.7	3.5	4.8	3.8	5.0	3.8	5.3	3.7	5.7	3.7
	82	27.5	4.1	3.4	4.3	3.5	4.6	3.5	4.7	3.7	4.9	3.7	5.2	3.7	5.6	3.6
	86	30.0	4.1	3.3	4.2	3.5	4.5	3.5	4.7	3.7	4.8	3.7	5.1	3.6	5.5	3.6
	91	32.5	4.0	3.3	4.1	3.4	4.4	3.4	4.6	3.7	4.7	3.7	5.0	3.6	5.4	3.6
	95	35.0	3.9	3.3	4.1	3.4	4.3	3.4	4.5	3.6	4.6	3.6	5.0	3.6	5.3	3.5
	100	37.5	3.8	3.3	4.0	3.4	4.3	3.4	4.4	3.6	4.6	3.6	4.9	3.6	5.2	3.5
	104	40.0	3.8	3.2	3.9	3.3	4.2	3.3	4.3	3.6	4.5	3.6	4.8	3.5	5.1	3.5
	110	43.0	3.7	3.2	3.8	3.3	4.1	3.3	4.2	3.5	4.4	3.5	4.7	3.5	5.0	3.4
50 (5.6)	68	20.0	5.4	4.0	5.6	4.2	6.0	4.2	6.2	4.4	6.4	4.4	6.9	4.4	7.3	4.3
	73	22.5	5.3	4.0	5.5	4.1	5.9	4.1	6.1	4.4	6.3	4.3	6.8	4.3	7.2	4.2
	77	25.0	5.3	4.0	5.4	4.1	5.8	4.1	6.0	4.3	6.2	4.3	6.6	4.3	7.1	4.2
	82	27.5	5.2	3.9	5.3	4.0	5.7	4.0	5.9	4.3	6.1	4.3	6.5	4.2	6.9	4.2
	86	30.0	5.0	3.9	5.2	4.0	5.6	4.0	5.8	4.2	6.0	4.2	6.4	4.2	6.8	4.1
	91	32.5	5.0	3.8	5.1	3.9	5.5	3.9	5.7	4.2	5.9	4.2	6.3	4.1	6.7	4.1
	95	35.0	4.9	3.8	5.0	3.9	5.4	3.9	5.6	4.1	5.8	4.1	6.2	4.1	6.6	4.0
	100	37.5	4.8	3.7	5.0	3.9	5.3	3.8	5.5	4.1	5.7	4.1	6.0	4.0	6.4	4.0
	104	40.0	4.7	3.7	4.8	3.8	5.2	3.8	5.4	4.0	5.6	4.0	5.9	4.0	6.3	3.9
	110	43.0	4.6	3.6	4.7	3.7	5.0	3.7	5.2	4.0	5.4	4.0	5.8	3.9	6.2	3.9
63 (7.1)	68	20.0	6.9	5.0	7.1	5.1	7.6	5.1	7.9	5.4	8.2	5.4	8.7	5.3	9.3	5.3
	73	22.5	6.7	4.9	7.0	5.1	7.5	5.0	7.8	5.3	8.0	5.3	8.6	5.3	9.1	5.2
	77	25.0	6.7	4.9	6.9	5.0	7.4	5.0	7.6	5.3	7.9	5.3	8.4	5.2	8.9	5.1
	82	27.5	6.5	4.8	6.7	4.9	7.2	4.9	7.5	5.2	7.7	5.2	8.3	5.2	8.8	5.1
	86	30.0	6.4	4.7	6.6	4.9	7.1	4.9	7.3	5.2	7.6	5.1	8.1	5.1	8.7	5.0
	91	32.5	6.3	4.7	6.5	4.8	7.0	4.8	7.2	5.1	7.5	5.1	8.0	5.0	8.5	5.0
	95	35.0	6.2	4.6	6.4	4.8	6.8	4.7	7.1	5.1	7.3	5.0	7.8	5.0	8.3	4.9
	100	37.5	6.1	4.6	6.3	4.7	6.7	4.7	7.0	5.0	7.2	5.0	7.7	4.9	8.2	4.9
	104	40.0	6.0	4.5	6.1	4.6	6.6	4.6	6.8	4.9	7.1	4.9	7.5	4.9	8.0	4.8
	110	43.0	5.8	4.5	6.0	4.6	6.4	4.6	6.6	4.9	6.9	4.8	7.3	4.8	7.8	4.7
80 (9.0)	68	20.0	8.7	6.2	9.0	6.4	9.7	6.4	10.0	6.7	10.4	6.7	11.1	6.6	11.7	6.5
	73	22.5	8.6	6.1	8.9	6.3	9.5	6.3	9.8	6.6	10.2	6.6	10.9	6.6	11.5	6.5
	77	25.0	8.5	6.1	8.7	6.2	9.4	6.2	9.7	6.6	10.0	6.5	10.6	6.5	11.3	6.4
	82	27.5	8.3	6.0	8.6	6.1	9.2	6.1	9.5	6.5	9.8	6.5	10.5	6.4	11.2	6.3
	86	30.0	8.1	5.9	8.4	6.1	9.0	6.1	9.3	6.4	9.6	6.4	10.3	6.3	11.0	6.3
	91	32.5	8.0	5.8	8.2	6.0	8.8	6.0	9.1	6.3	9.5	6.3	10.1	6.2	10.8	6.2
	95	35.0	7.8	5.7	8.1	5.9	8.6	5.9	9.0	6.3	9.3	6.2	9.9	6.2	10.5	6.1
	100	37.5	7.7	5.7	8.0	5.9	8.5	5.8	8.8	6.2	9.1	6.2	9.7	6.1	10.4	6.0
	104	40.0	7.6	5.6	7.7	5.7	8.3	5.7	8.6	6.1	9.0	6.1	9.5	6.0	10.1	5.9
	110	43.0	7.4	5.5	7.6	5.7	8.1	5.6	8.4	6.0	8.7	6.0	9.3	5.9	9.9	5.9
100 (11.2)	68	20.0	10.8	7.7	11.2	8.0	12.0	8.0	12.5	8.4	12.9	8.4	13.8	8.3	14.6	8.2
	73	22.5	10.6	7.6	11.0	7.9	11.8	7.9	12.2	8.3	12.7	8.3	13.6	8.2	14.3	8.1
	77	25.0	10.5	7.6	10.9	7.8	11.6	7.8	12.0	8.2	12.4	8.2	13.2	8.1	14.1	8.0
	82	27.5	10.3	7.5	10.6	7.7	11.4	7.7	11.8	8.1	12.2	8.1	13.0	8.0	13.9	7.9
	86	30.0	10.1	7.4	10.5	7.6	11.2	7.6	11.6	8.0	12.0	8.0	12.8	7.9	13.7	7.8
	91	32.5	9.9	7.3	10.2	7.5	11.0	7.5	11.4	7.9	11.8	7.9	12.5	7.8	13.4	7.7
	95	35.0	9.7	7.2	10.1	7.4	10.8	7.4	11.2	7.8	11.5	7.8	12.3	7.7	13.1	7.6
	100	37.5	9.6	7.1	10.0	7.4	10.6	7.3	11.0	7.7	11.4	7.7	12.1	7.6	12.9	7.5
	104	40.0	9.4	7.0	9.6	7.2	10.4	7.2	10.8	7.6	11.1	7.6	11.9	7.5	12.6	7.4
	110	43.0	9.2	6.9	9.4	7.1	10.1	7.1	10.5	7.5	10.9	7.5	11.6	7.4	12.3	7.3
125 (14.0)	68	20.0	13.5	9.4	14.0	9.7	15.1	9.7	15.6	10.2	16.1	10.2	17.2	10.1	18.3	9.9
	73	22.5	13.3	9.3	13.8	9.6	14.8	9.6	15.3	10.1	15.8	10.0	16.9	10.0	17.9	9.8
	77	25.0	13.2	9.2	13.6	9.5	14.6	9.5	15.1	10.0	15.5	9.9	16.5	9.8	17.6	9.7
	82	27.5	12.9	9.1	13.3	9.3	14.3	9.3	14.8	9.8	15.3	9.8	16.3	9.7	17.4	9.6
	86	30.0	12.6	8.9	13.1	9.2	14.0	9.2	14.5	9.7	15.0	9.7	16.0	9.6	17.1	9.5
	91	32.5	12.4	8.8	12.8	9.1	13.7	9.1	14.2	9.6	14.7	9.5	15.7	9.4	16.7	9.3
	95	35.0	12.2	8.7	12.6	9.0	13.4	8.9	14.0	9.5	14.4	9.4	15.4	9.3	16.4	9.2
	100	37.5	12.0	8.6	12.5	8.9	13.2	8.8	13.7	9.3	14.2	9.3	15.1	9.2	16.1	9.1
	104	40.0	11.8	8.5	12.0	8.7	13.0	8.7	13.4	9.2	13.9	9.2	14.8	9.1	15.8	9.0
	110	43.0	11.5	8.4	11.8	8.6	12.6	8.5	13.1	9.1	13.6	9.0	14.5	9.0	15.4	8.8

kcal/h = kW x 860, Btu/h = kW x 3,412

F5. Cooling capacity with PUHY-P850-1250YSHM/PUHY-EP850-900YSHM

PLFY-P-VCM-E

CA : Capacity(kW) SHC : Sensible Heat Capacity(kW)

Model size (Rated kW)	Outdoor air temp.		Indoor air temp.													
			71 ˚FDB / 59˚FWB		73˚FDB / 61˚FWB		77˚FDB / 64˚FWB		81˚FDB / 66˚FWB		82˚FDB / 68˚FWB		86˚FDB / 72˚FWB		90˚FDB / 75˚FWB	
			21.5˚CDB / 15˚CWB		23˚CDB / 16˚CWB		25˚CDB / 18˚CWB		27˚CDB / 19˚CWB		28˚CDB / 20˚CWB		30˚CDB / 22˚CWB		32˚CDB / 24˚CWB	
	˚FDB	˚CDB	CA	SHC	CA	SHC	CA	SHC	CA	SHC	CA	SHC	CA	SHC	CA	SHC
20 (2.2)	68	20.0	2.1	1.8	2.1	1.8	2.3	1.8	2.4	2.0	2.4	1.9	2.6	1.9	2.8	1.9
	73	22.5	2.1	1.8	2.1	1.8	2.3	1.8	2.3	1.9	2.4	1.9	2.6	1.9	2.7	1.9
	77	25.0	2.0	1.8	2.1	1.8	2.2	1.8	2.3	1.9	2.4	1.9	2.6	1.9	2.7	1.9
	82	27.5	2.0	1.7	2.1	1.8	2.2	1.8	2.3	1.9	2.4	1.9	2.5	1.9	2.7	1.9
	86	30.0	2.0	1.7	2.0	1.8	2.2	1.8	2.3	1.9	2.3	1.9	2.5	1.9	2.7	1.9
	91	32.5	2.0	1.7	2.0	1.8	2.2	1.8	2.2	1.9	2.3	1.9	2.5	1.9	2.6	1.9
	95	35.0	1.9	1.7	2.0	1.8	2.1	1.8	2.2	1.9	2.3	1.9	2.5	1.9	2.6	1.9
	100	37.5	1.9	1.7	2.0	1.8	2.1	1.8	2.2	1.9	2.3	1.9	2.4	1.9	2.6	1.8
	104	40.0	1.9	1.7	1.9	1.7	2.1	1.7	2.2	1.9	2.2	1.9	2.4	1.9	2.6	1.8
	110	43.0	1.9	1.7	1.9	1.7	2.1	1.7	2.1	1.9	2.2	1.9	2.4	1.8	2.5	1.8
25 (2.8)	68	20.0	2.6	2.1	2.7	2.2	2.9	2.2	3.0	2.3	3.1	2.3	3.3	2.3	3.5	2.3
	73	22.5	2.6	2.1	2.7	2.2	2.9	2.2	3.0	2.3	3.1	2.3	3.3	2.3	3.5	2.3
	77	25.0	2.6	2.1	2.7	2.2	2.9	2.2	2.9	2.3	3.0	2.3	3.2	2.3	3.4	2.2
	82	27.5	2.6	2.1	2.6	2.2	2.8	2.1	2.9	2.3	3.0	2.3	3.2	2.3	3.4	2.2
	86	30.0	2.5	2.1	2.6	2.1	2.8	2.1	2.9	2.3	3.0	2.3	3.2	2.3	3.4	2.2
	91	32.5	2.5	2.1	2.6	2.1	2.7	2.1	2.8	2.3	2.9	2.3	3.2	2.2	3.4	2.2
	95	35.0	2.5	2.1	2.5	2.1	2.7	2.1	2.8	2.3	2.9	2.3	3.1	2.2	3.3	2.2
	100	37.5	2.5	2.0	2.5	2.1	2.7	2.1	2.8	2.2	2.9	2.2	3.1	2.2	3.3	2.2
	104	40.0	2.4	2.0	2.5	2.1	2.6	2.1	2.7	2.2	2.9	2.2	3.1	2.2	3.3	2.2
	110	43.0	2.4	2.0	2.4	2.1	2.6	2.1	2.7	2.2	2.8	2.2	3.0	2.2	3.2	2.2
32 (3.6)	68	20.0	3.4	2.6	3.5	2.7	3.7	2.7	3.9	2.8	4.0	2.8	4.2	2.8	4.5	2.7
	73	22.5	3.4	2.6	3.5	2.6	3.7	2.6	3.8	2.8	4.0	2.8	4.2	2.8	4.5	2.7
	77	25.0	3.3	2.6	3.4	2.6	3.7	2.6	3.8	2.8	3.9	2.8	4.2	2.8	4.4	2.7
	82	27.5	3.3	2.5	3.4	2.6	3.6	2.6	3.7	2.8	3.9	2.8	4.1	2.7	4.4	2.7
	86	30.0	3.3	2.5	3.3	2.6	3.6	2.6	3.7	2.8	3.8	2.7	4.1	2.7	4.3	2.7
	91	32.5	3.2	2.5	3.3	2.6	3.5	2.6	3.7	2.7	3.8	2.7	4.1	2.7	4.3	2.7
	95	35.0	3.2	2.5	3.3	2.6	3.5	2.5	3.6	2.7	3.8	2.7	4.0	2.7	4.3	2.7
	100	37.5	3.2	2.5	3.2	2.5	3.4	2.5	3.6	2.7	3.7	2.7	4.0	2.7	4.2	2.6
	104	40.0	3.1	2.5	3.2	2.5	3.4	2.5	3.5	2.7	3.7	2.7	3.9	2.7	4.2	2.6
	110	43.0	3.1	2.4	3.1	2.5	3.4	2.5	3.5	2.7	3.6	2.7	3.9	2.6	4.2	2.6
40 (4.5)	68	20.0	4.3	3.0	4.4	3.1	4.7	3.1	4.8	3.3	5.0	3.3	5.3	3.2	5.6	3.2
	73	22.5	4.2	3.0	4.3	3.1	4.6	3.1	4.8	3.2	4.9	3.2	5.3	3.2	5.6	3.1
	77	25.0	4.2	3.0	4.3	3.1	4.6	3.1	4.7	3.2	4.9	3.2	5.2	3.2	5.5	3.1
	82	27.5	4.1	3.0	4.2	3.0	4.5	3.0	4.7	3.2	4.8	3.2	5.2	3.2	5.5	3.1
	86	30.0	4.1	2.9	4.2	3.0	4.5	3.0	4.6	3.2	4.8	3.2	5.1	3.1	5.4	3.1
	91	32.5	4.0	2.9	4.1	3.0	4.4	3.0	4.6	3.1	4.7	3.1	5.1	3.1	5.4	3.1
	95	35.0	4.0	2.9	4.1	3.0	4.4	3.0	4.5	3.1	4.7	3.1	5.0	3.1	5.3	3.1
	100	37.5	3.9	2.9	4.0	2.9	4.3	2.9	4.5	3.1	4.6	3.1	5.0	3.1	5.3	3.0
	104	40.0	3.9	2.9	4.0	2.9	4.3	2.9	4.4	3.1	4.6	3.1	4.9	3.1	5.2	3.0
	110	43.0	3.8	2.8	3.9	2.9	4.2	2.9	4.4	3.1	4.5	3.1	4.9	3.0	5.2	3.0

kcal/h = kW x 860, Btu/h = kW x 3,412

CT

F5. Cooling capacity with PUHY-P850-1250YSHM/PUHY-EP850-900YSHM

PLFY-P-VBM-E

CA : Capacity(kW) SHC : Sensible Heat Capacity(kW)

Model size (Rated kW)	Outdoor air temp.		Indoor air temp.													
			71 ˚FDB / 59˚FWB		73˚FDB / 61˚FWB		77˚FDB / 64˚FWB		81˚FDB / 66˚FWB		82˚FDB / 68˚FWB		86˚FDB / 72˚FWB		90˚FDB / 75˚FWB	
			21.5˚CDB / 15˚CWB		23˚CDB / 16˚CWB		25˚CDB / 18˚CWB		27˚CDB / 19˚CWB		28˚CDB / 20˚CWB		30˚CDB / 22˚CWB		32˚CDB / 24˚CWB	
	˚FDB	˚CDB	CA	SHC	CA	SHC	CA	SHC	CA	SHC	CA	SHC	CA	SHC	CA	SHC
32 (3.6)	68	20.0	3.4	2.8	3.5	2.9	3.7	2.9	3.9	3.1	4.0	3.1	4.2	3.1	4.5	3.0
	73	22.5	3.4	2.8	3.5	2.9	3.7	2.9	3.8	3.1	4.0	3.1	4.2	3.1	4.5	3.0
	77	25.0	3.3	2.8	3.4	2.9	3.7	2.9	3.8	3.1	3.9	3.1	4.2	3.0	4.4	3.0
	82	27.5	3.3	2.8	3.4	2.9	3.6	2.8	3.7	3.1	3.9	3.0	4.1	3.0	4.4	3.0
	86	30.0	3.3	2.8	3.3	2.8	3.6	2.8	3.7	3.0	3.8	3.0	4.1	3.0	4.3	3.0
	91	32.5	3.2	2.7	3.3	2.8	3.5	2.8	3.7	3.0	3.8	3.0	4.1	3.0	4.3	3.0
	95	35.0	3.2	2.7	3.3	2.8	3.5	2.8	3.6	3.0	3.8	3.0	4.0	3.0	4.3	2.9
	100	37.5	3.2	2.7	3.2	2.8	3.4	2.8	3.6	3.0	3.7	3.0	4.0	3.0	4.2	2.9
	104	40.0	3.1	2.7	3.2	2.8	3.4	2.8	3.5	3.0	3.7	3.0	3.9	3.0	4.2	2.9
	110	43.0	3.1	2.7	3.1	2.8	3.4	2.7	3.5	3.0	3.6	3.0	3.9	2.9	4.2	2.9
40 (4.5)	68	20.0	4.3	3.4	4.4	3.5	4.7	3.5	4.8	3.8	5.0	3.8	5.3	3.7	5.6	3.7
	73	22.5	4.2	3.4	4.3	3.5	4.6	3.5	4.8	3.8	4.9	3.7	5.3	3.7	5.6	3.6
	77	25.0	4.2	3.4	4.3	3.5	4.6	3.5	4.7	3.7	4.9	3.7	5.2	3.7	5.5	3.6
	82	27.5	4.1	3.4	4.2	3.5	4.5	3.5	4.7	3.7	4.8	3.7	5.2	3.7	5.5	3.6
	86	30.0	4.1	3.4	4.2	3.5	4.5	3.4	4.6	3.7	4.8	3.7	5.1	3.6	5.4	3.6
	91	32.5	4.0	3.3	4.1	3.4	4.4	3.4	4.6	3.7	4.7	3.7	5.1	3.6	5.4	3.6
	95	35.0	4.0	3.3	4.1	3.4	4.4	3.4	4.5	3.6	4.7	3.6	5.0	3.6	5.3	3.6
	100	37.5	3.9	3.3	4.0	3.4	4.3	3.4	4.5	3.6	4.6	3.6	5.0	3.6	5.3	3.5
	104	40.0	3.9	3.3	4.0	3.4	4.3	3.4	4.4	3.6	4.6	3.6	4.9	3.6	5.2	3.5
	110	43.0	3.8	3.3	3.9	3.3	4.2	3.3	4.4	3.6	4.5	3.6	4.9	3.6	5.2	3.5
50 (5.6)	68	20.0	5.3	4.0	5.4	4.1	5.8	4.1	6.0	4.3	6.2	4.3	6.6	4.3	7.0	4.2
	73	22.5	5.2	4.0	5.4	4.1	5.8	4.0	5.9	4.3	6.1	4.3	6.6	4.2	7.0	4.2
	77	25.0	5.2	3.9	5.3	4.0	5.7	4.0	5.9	4.3	6.1	4.2	6.5	4.2	6.9	4.1
	82	27.5	5.1	3.9	5.3	4.0	5.6	4.0	5.8	4.2	6.0	4.2	6.4	4.2	6.8	4.1
	86	30.0	5.1	3.9	5.2	4.0	5.6	4.0	5.8	4.2	5.9	4.2	6.4	4.2	6.7	4.1
	91	32.5	5.0	3.8	5.1	3.9	5.5	3.9	5.7	4.2	5.9	4.2	6.3	4.1	6.7	4.1
	95	35.0	5.0	3.8	5.1	3.9	5.4	3.9	5.6	4.2	5.8	4.1	6.3	4.1	6.7	4.1
	100	37.5	4.9	3.8	5.0	3.9	5.4	3.9	5.6	4.1	5.8	4.1	6.2	4.1	6.6	4.0
	104	40.0	4.8	3.8	4.9	3.8	5.3	3.8	5.5	4.1	5.7	4.1	6.1	4.1	6.5	4.0
	110	43.0	4.8	3.7	4.9	3.8	5.2	3.8	5.4	4.1	5.6	4.1	6.0	4.0	6.5	4.0
63 (7.1)	68	20.0	6.7	4.9	6.9	5.0	7.4	5.0	7.6	5.3	7.9	5.3	8.4	5.2	8.9	5.1
	73	22.5	6.6	4.9	6.8	5.0	7.3	5.0	7.5	5.2	7.8	5.2	8.3	5.2	8.8	5.1
	77	25.0	6.6	4.8	6.7	4.9	7.2	4.9	7.5	5.2	7.7	5.2	8.2	5.1	8.7	5.1
	82	27.5	6.5	4.8	6.7	4.9	7.1	4.9	7.4	5.2	7.6	5.2	8.2	5.1	8.7	5.0
	86	30.0	6.4	4.8	6.6	4.9	7.1	4.8	7.3	5.1	7.5	5.1	8.1	5.1	8.6	5.0
	91	32.5	6.4	4.7	6.5	4.8	7.0	4.8	7.2	5.1	7.5	5.1	8.0	5.1	8.5	5.0
	95	35.0	6.3	4.7	6.4	4.8	6.9	4.8	7.1	5.1	7.4	5.1	7.9	5.0	8.4	5.0
	100	37.5	6.2	4.6	6.3	4.7	6.8	4.7	7.0	5.0	7.3	5.0	7.8	5.0	8.4	4.9
	104	40.0	6.1	4.6	6.2	4.7	6.7	4.7	7.0	5.0	7.2	5.0	7.8	5.0	8.3	4.9
	110	43.0	6.1	4.6	6.2	4.7	6.6	4.7	6.9	5.0	7.2	5.0	7.7	4.9	8.2	4.9
80 (9.0)	68	20.0	8.5	6.1	8.7	6.2	9.4	6.2	9.6	6.5	10.0	6.5	10.6	6.5	11.3	6.4
	73	22.5	8.4	6.0	8.6	6.2	9.3	6.2	9.6	6.5	9.9	6.5	10.5	6.4	11.2	6.3
	77	25.0	8.3	6.0	8.5	6.1	9.2	6.1	9.5	6.5	9.8	6.4	10.4	6.4	11.1	6.3
	82	27.5	8.2	6.0	8.4	6.1	9.0	6.1	9.4	6.4	9.7	6.4	10.4	6.3	11.0	6.3
	86	30.0	8.1	5.9	8.3	6.0	8.9	6.0	9.3	6.4	9.6	6.3	10.2	6.3	10.8	6.2
	91	32.5	8.1	5.9	8.2	6.0	8.8	6.0	9.2	6.3	9.5	6.3	10.1	6.3	10.8	6.2
	95	35.0	8.0	5.8	8.1	5.9	8.7	5.9	9.0	6.3	9.4	6.3	10.1	6.2	10.7	6.1
	100	37.5	7.9	5.8	8.0	5.9	8.6	5.9	8.9	6.2	9.3	6.2	9.9	6.2	10.6	6.1
	104	40.0	7.8	5.7	7.9	5.8	8.5	5.8	8.8	6.2	9.2	6.2	9.8	6.1	10.5	6.1
	110	43.0	7.7	5.7	7.8	5.8	8.4	5.8	8.7	6.1	9.1	6.1	9.7	6.1	10.4	6.0
100 (11.2)	68	20.0	10.6	7.6	10.9	7.8	11.6	7.8	12.0	8.2	12.4	8.2	13.2	8.1	14.0	8.0
	73	22.5	10.5	7.6	10.8	7.7	11.5	7.7	11.9	8.1	12.3	8.1	13.1	8.0	13.9	7.9
	77	25.0	10.4	7.5	10.6	7.7	11.4	7.7	11.8	8.1	12.2	8.1	13.0	8.0	13.8	7.9
	82	27.5	10.2	7.4	10.5	7.6	11.2	7.6	11.6	8.0	12.0	8.0	12.9	7.9	13.7	7.8
	86	30.0	10.1	7.4	10.4	7.6	11.1	7.5	11.5	8.0	11.9	7.9	12.7	7.9	13.5	7.8
	91	32.5	10.0	7.3	10.2	7.5	11.0	7.5	11.4	7.9	11.8	7.9	12.6	7.8	13.4	7.7
	95	35.0	9.9	7.3	10.1	7.4	10.9	7.4	11.2	7.9	11.7	7.9	12.5	7.8	13.3	7.7
	100	37.5	9.8	7.2	10.0	7.4	10.7	7.4	11.1	7.8	11.6	7.8	12.4	7.7	13.2	7.6
	104	40.0	9.7	7.2	9.9	7.3	10.6	7.3	11.0	7.7	11.4	7.7	12.2	7.7	13.0	7.6
	110	43.0	9.6	7.1	9.7	7.2	10.4	7.2	10.8	7.7	11.3	7.7	12.1	7.6	12.9	7.5
125 (14.0)	68	20.0	13.2	9.3	13.6	9.5	14.6	9.5	15.0	9.9	15.5	9.9	16.5	9.8	17.5	9.7
	73	22.5	13.1	9.2	13.4	9.4	14.4	9.4	14.9	9.9	15.4	9.8	16.4	9.7	17.4	9.6
	77	25.0	13.0	9.1	13.3	9.3	14.3	9.3	14.7	9.8	15.2	9.8	16.2	9.7	17.2	9.5
	82	27.5	12.8	9.1	13.1	9.3	14.0	9.2	14.6	9.7	15.1	9.7	16.1	9.6	17.1	9.5
	86	30.0	12.7	9.0	13.0	9.2	13.9	9.1	14.4	9.7	14.9	9.6	15.9	9.6	16.9	9.4
	91	32.5	12.5	8.9	12.8	9.1	13.7	9.1	14.2	9.6	14.7	9.6	15.8	9.5	16.8	9.4
	95	35.0	12.4	8.8	12.6	9.0	13.6	9.0	14.0	9.5	14.6	9.5	15.7	9.4	16.6	9.3
	100	37.5	12.3	8.8	12.5	8.9	13.4	8.9	13.9	9.4	14.4	9.4	15.5	9.4	16.5	9.2
	104	40.0	12.1	8.7	12.3	8.8	13.2	8.8	13.7	9.3	14.3	9.4	15.3	9.3	16.3	9.2
	110	43.0	12.0	8.6	12.2	8.8	13.1	8.7	13.6	9.3	14.1	9.3	15.1	9.2	16.1	9.1

kcal/h = kW x 860, Btu/h = kW x 3,412

F6. Cooling capacity with PUHY-HP200-500Y(S)HM

PLFY-P-VCM-E

CA : Capacity(kW) SHC : Sensible Heat Capacity(kW)

Model size (Rated kW)	Outdoor air temp.		Indoor air temp.													
			71 ˚FDB / 59˚FWB		73˚FDB / 61˚FWB		77˚FDB / 64˚FWB		81˚FDB / 66˚FWB		82˚FDB / 68˚FWB		86˚FDB / 72˚FWB		90˚FDB / 75˚FWB	
			21.5˚CDB / 15˚CWB		23˚CDB / 16˚CWB		25˚CDB / 18˚CWB		27˚CDB / 19˚CWB		28˚CDB / 20˚CWB		30˚CDB / 22˚CWB		32˚CDB / 24˚CWB	
	˚FDB	˚CDB	CA	SHC	CA	SHC	CA	SHC	CA	SHC	CA	SHC	CA	SHC	CA	SHC
20 (2.2)	68	20.0	1.9	1.7	2.1	1.8	2.2	1.8	2.4	2.0	2.4	2.0	2.6	1.9	2.7	1.9
	73	22.5	1.9	1.7	2.1	1.8	2.2	1.8	2.4	2.0	2.4	2.0	2.6	1.9	2.7	1.9
	77	25.0	1.9	1.7	2.1	1.8	2.2	1.8	2.4	2.0	2.4	1.9	2.6	1.9	2.7	1.9
	82	27.5	1.9	1.7	2.1	1.8	2.2	1.8	2.3	1.9	2.4	1.9	2.5	1.9	2.6	1.9
	86	30.0	1.9	1.7	2.0	1.8	2.2	1.8	2.3	1.9	2.4	1.9	2.5	1.9	2.6	1.8
	91	32.5	1.9	1.7	2.0	1.8	2.1	1.8	2.2	1.9	2.3	1.9	2.4	1.9	2.5	1.8
	95	35.0	1.9	1.7	2.0	1.8	2.1	1.8	2.2	1.9	2.3	1.9	2.4	1.9	2.5	1.8
	100	37.5	1.9	1.7	2.0	1.8	2.1	1.7	2.2	1.9	2.2	1.9	2.3	1.8	2.4	1.8
	104	40.0	1.9	1.7	1.9	1.8	2.0	1.7	2.1	1.9	2.2	1.9	2.3	1.8	2.4	1.8
	110	43.0	1.9	1.7	1.9	1.7	2.0	1.7	2.1	1.8	2.1	1.8	2.2	1.8	2.3	1.8
25 (2.8)	68	20.0	2.5	2.1	2.7	2.2	2.8	2.2	3.0	2.3	3.1	2.3	3.3	2.3	3.5	2.3
	73	22.5	2.5	2.1	2.7	2.2	2.8	2.2	3.0	2.3	3.1	2.3	3.3	2.3	3.5	2.3
	77	25.0	2.5	2.1	2.7	2.2	2.8	2.2	3.0	2.3	3.1	2.3	3.3	2.3	3.4	2.2
	82	27.5	2.5	2.0	2.6	2.2	2.8	2.1	2.9	2.3	3.0	2.3	3.2	2.3	3.4	2.2
	86	30.0	2.4	2.0	2.6	2.1	2.8	2.1	2.9	2.3	3.0	2.3	3.1	2.2	3.3	2.2
	91	32.5	2.4	2.0	2.6	2.1	2.7	2.1	2.8	2.3	2.9	2.3	3.1	2.2	3.2	2.2
	95	35.0	2.4	2.0	2.5	2.1	2.7	2.1	2.8	2.3	2.9	2.2	3.0	2.2	3.2	2.2
	100	37.5	2.4	2.0	2.5	2.1	2.6	2.1	2.8	2.2	2.8	2.2	3.0	2.2	3.1	2.1
	104	40.0	2.4	2.0	2.5	2.1	2.6	2.1	2.7	2.2	2.8	2.2	2.9	2.2	3.0	2.1
	110	43.0	2.4	2.0	2.4	2.1	2.6	2.0	2.7	2.2	2.7	2.2	2.8	2.1	2.9	2.1
32 (3.6)	68	20.0	3.2	2.5	3.4	2.6	3.6	2.6	3.9	2.8	4.0	2.8	4.2	2.8	4.5	2.7
	73	22.5	3.2	2.5	3.4	2.6	3.6	2.6	3.9	2.8	4.0	2.8	4.2	2.8	4.5	2.7
	77	25.0	3.2	2.5	3.4	2.6	3.6	2.6	3.8	2.8	4.0	2.8	4.2	2.8	4.4	2.7
	82	27.5	3.2	2.5	3.4	2.6	3.6	2.6	3.8	2.8	3.9	2.8	4.1	2.7	4.3	2.7
	86	30.0	3.1	2.5	3.3	2.6	3.5	2.6	3.7	2.8	3.8	2.7	4.0	2.7	4.2	2.6
	91	32.5	3.1	2.5	3.3	2.6	3.5	2.5	3.7	2.7	3.8	2.7	4.0	2.7	4.1	2.6
	95	35.0	3.1	2.5	3.3	2.6	3.4	2.5	3.6	2.7	3.7	2.7	3.9	2.6	4.1	2.6
	100	37.5	3.1	2.4	3.2	2.5	3.4	2.5	3.5	2.7	3.6	2.7	3.8	2.6	4.0	2.6
	104	40.0	3.1	2.4	3.2	2.5	3.3	2.5	3.5	2.7	3.6	2.6	3.7	2.6	3.9	2.5
	110	43.0	3.0	2.4	3.1	2.5	3.3	2.5	3.4	2.6	3.5	2.6	3.6	2.5	3.8	2.5
40 (4.5)	68	20.0	4.0	2.9	4.3	3.1	4.5	3.0	4.8	3.3	5.0	3.3	5.3	3.2	5.6	3.2
	73	22.5	4.0	2.9	4.3	3.1	4.5	3.0	4.8	3.3	5.0	3.3	5.3	3.2	5.6	3.2
	77	25.0	4.0	2.9	4.3	3.1	4.5	3.0	4.8	3.3	5.0	3.2	5.3	3.2	5.5	3.1
	82	27.5	4.0	2.9	4.2	3.0	4.5	3.0	4.7	3.2	4.9	3.2	5.1	3.1	5.4	3.1
	86	30.0	3.9	2.9	4.2	3.0	4.4	3.0	4.7	3.2	4.8	3.2	5.1	3.1	5.3	3.0
	91	32.5	3.9	2.9	4.1	3.0	4.4	2.9	4.6	3.1	4.7	3.1	5.0	3.1	5.2	3.0
	95	35.0	3.9	2.8	4.1	3.0	4.3	2.9	4.5	3.1	4.6	3.1	4.9	3.0	5.1	3.0
	100	37.5	3.9	2.8	4.0	2.9	4.2	2.9	4.4	3.1	4.5	3.1	4.8	3.0	5.0	2.9
	104	40.0	3.8	2.8	4.0	2.9	4.2	2.9	4.4	3.1	4.5	3.0	4.7	3.0	4.9	2.9
	110	43.0	3.8	2.8	3.9	2.9	4.1	2.8	4.3	3.0	4.4	3.0	4.5	2.9	4.7	2.8

kcal/h = kW x 860, Btu/h = kW x 3,412

CT

F6. Cooling capacity with PUHY-HP200-500Y(S)HM

PLFY-P-VBM-E

CA : Capacity(kW) SHC : Sensible Heat Capacity(kW)

Model size (Rated kW)	Outdoor air temp.		Indoor air temp.													
			71 ˚FDB / 59˚FWB		73˚FDB / 61˚FWB		77˚FDB / 64˚FWB		81˚FDB / 66˚FWB		82˚FDB / 68˚FWB		86˚FDB / 72˚FWB		90˚FDB / 75˚FWB	
			21.5˚CDB / 15˚CWB		23˚CDB / 16˚CWB		25˚CDB / 18˚CWB		27˚CDB / 19˚CWB		28˚CDB / 20˚CWB		30˚CDB / 22˚CWB		32˚CDB / 24˚CWB	
	˚FDB	˚CDB	CA	SHC	CA	SHC	CA	SHC	CA	SHC	CA	SHC	CA	SHC	CA	SHC
32 (3.6)	68	20.0	3.2	2.7	3.4	2.9	3.6	2.9	3.9	3.1	4.0	3.1	4.2	3.1	4.5	3.0
	73	22.5	3.2	2.7	3.4	2.9	3.6	2.9	3.9	3.1	4.0	3.1	4.2	3.1	4.5	3.0
	77	25.0	3.2	2.7	3.4	2.9	3.6	2.9	3.8	3.1	4.0	3.1	4.2	3.0	4.4	3.0
	82	27.5	3.2	2.7	3.4	2.9	3.6	2.8	3.8	3.1	3.9	3.1	4.1	3.0	4.3	3.0
	86	30.0	3.1	2.7	3.3	2.9	3.5	2.8	3.7	3.1	3.8	3.0	4.0	3.0	4.2	2.9
	91	32.5	3.1	2.7	3.3	2.8	3.5	2.8	3.7	3.0	3.8	3.0	4.0	3.0	4.1	2.9
	95	35.0	3.1	2.7	3.3	2.8	3.4	2.8	3.6	3.0	3.7	3.0	3.9	2.9	4.1	2.9
	100	37.5	3.1	2.7	3.2	2.8	3.4	2.8	3.5	3.0	3.6	3.0	3.8	2.9	4.0	2.8
	104	40.0	3.1	2.7	3.2	2.8	3.3	2.7	3.5	3.0	3.6	2.9	3.7	2.9	3.9	2.8
	110	43.0	3.0	2.7	3.1	2.8	3.3	2.7	3.4	2.9	3.5	2.9	3.6	2.8	3.8	2.8
40 (4.5)	68	20.0	4.0	3.3	4.3	3.5	4.5	3.5	4.8	3.8	5.0	3.8	5.3	3.7	5.6	3.7
	73	22.5	4.0	3.3	4.3	3.5	4.5	3.5	4.8	3.8	5.0	3.8	5.3	3.7	5.6	3.7
	77	25.0	4.0	3.3	4.3	3.5	4.5	3.5	4.8	3.8	5.0	3.7	5.3	3.7	5.5	3.6
	82	27.5	4.0	3.3	4.2	3.5	4.5	3.5	4.7	3.7	4.9	3.7	5.1	3.7	5.4	3.6
	86	30.0	3.9	3.3	4.2	3.5	4.4	3.4	4.7	3.7	4.8	3.7	5.1	3.6	5.3	3.5
	91	32.5	3.9	3.3	4.1	3.4	4.4	3.4	4.6	3.7	4.7	3.6	5.0	3.6	5.2	3.5
	95	35.0	3.9	3.3	4.1	3.4	4.3	3.4	4.5	3.6	4.6	3.6	4.9	3.6	5.1	3.5
	100	37.5	3.9	3.3	4.0	3.4	4.2	3.3	4.4	3.6	4.5	3.6	4.8	3.5	5.0	3.4
	104	40.0	3.8	3.3	4.0	3.4	4.2	3.3	4.4	3.6	4.5	3.6	4.7	3.5	4.9	3.4
	110	43.0	3.8	3.2	3.9	3.3	4.1	3.3	4.3	3.5	4.4	3.5	4.5	3.4	4.7	3.4
50 (5.6)	68	20.0	4.9	3.8	5.3	4.0	5.6	4.0	6.0	4.3	6.2	4.3	6.6	4.2	7.0	4.2
	73	22.5	4.9	3.8	5.3	4.0	5.6	4.0	6.0	4.3	6.2	4.3	6.6	4.2	7.0	4.2
	77	25.0	4.9	3.8	5.3	4.0	5.6	4.0	6.0	4.3	6.2	4.3	6.5	4.2	6.9	4.1
	82	27.5	4.9	3.8	5.3	4.0	5.6	4.0	5.9	4.3	6.1	4.2	6.4	4.2	6.7	4.1
	86	30.0	4.9	3.8	5.2	4.0	5.5	3.9	5.8	4.2	6.0	4.2	6.3	4.1	6.6	4.0
	91	32.5	4.9	3.8	5.1	3.9	5.4	3.9	5.7	4.2	5.9	4.2	6.2	4.1	6.4	4.0
	95	35.0	4.8	3.8	5.1	3.9	5.4	3.9	5.6	4.1	5.8	4.1	6.1	4.0	6.3	3.9
	100	37.5	4.8	3.7	5.0	3.9	5.3	3.8	5.5	4.1	5.7	4.1	5.9	4.0	6.2	3.9
	104	40.0	4.8	3.7	5.0	3.9	5.2	3.8	5.4	4.1	5.6	4.0	5.8	3.9	6.1	3.9
	110	43.0	4.7	3.7	4.9	3.8	5.1	3.8	5.3	4.0	5.4	4.0	5.7	3.9	5.9	3.8
63 (7.1)	68	20.0	6.3	4.7	6.7	4.9	7.2	4.9	7.6	5.3	7.9	5.3	8.4	5.2	8.8	5.1
	73	22.5	6.3	4.7	6.7	4.9	7.2	4.9	7.6	5.3	7.9	5.3	8.4	5.2	8.8	5.1
	77	25.0	6.3	4.7	6.7	4.9	7.2	4.9	7.6	5.3	7.8	5.3	8.3	5.2	8.7	5.1
	82	27.5	6.2	4.7	6.7	4.9	7.1	4.9	7.5	5.2	7.7	5.2	8.1	5.1	8.5	5.0
	86	30.0	6.2	4.6	6.6	4.9	7.0	4.8	7.4	5.2	7.6	5.1	8.0	5.0	8.4	4.9
	91	32.5	6.2	4.6	6.5	4.8	6.9	4.8	7.2	5.1	7.4	5.1	7.8	5.0	8.2	4.9
	95	35.0	6.1	4.6	6.4	4.8	6.8	4.7	7.1	5.1	7.3	5.0	7.7	4.9	8.0	4.8
	100	37.5	6.1	4.6	6.4	4.8	6.7	4.7	7.0	5.0	7.2	5.0	7.5	4.9	7.8	4.7
	104	40.0	6.1	4.6	6.3	4.7	6.6	4.6	6.9	5.0	7.1	4.9	7.4	4.8	7.7	4.7
	110	43.0	6.0	4.5	6.2	4.7	6.5	4.6	6.7	4.9	6.9	4.8	7.2	4.7	7.5	4.6
80 (9.0)	68	20.0	7.9	5.8	8.5	6.1	9.1	6.1	9.6	6.5	10.0	6.5	10.6	6.5	11.2	6.3
	73	22.5	7.9	5.8	8.5	6.1	9.1	6.1	9.6	6.5	10.0	6.5	10.6	6.5	11.2	6.3
	77	25.0	7.9	5.8	8.5	6.1	9.1	6.1	9.6	6.5	10.0	6.5	10.5	6.4	11.0	6.3
	82	27.5	7.9	5.8	8.5	6.1	9.0	6.0	9.5	6.5	9.8	6.4	10.3	6.3	10.8	6.2
	86	30.0	7.9	5.8	8.4	6.1	8.9	6.0	9.3	6.4	9.6	6.4	10.1	6.3	10.6	6.1
	91	32.5	7.8	5.7	8.3	6.0	8.7	5.9	9.2	6.3	9.4	6.3	9.9	6.2	10.4	6.0
	95	35.0	7.8	5.7	8.2	6.0	8.6	5.9	9.0	6.3	9.3	6.2	9.7	6.1	10.2	6.0
	100	37.5	7.7	5.7	8.1	5.9	8.5	5.8	8.9	6.2	9.1	6.1	9.5	6.0	9.9	5.9
	104	40.0	7.7	5.7	8.0	5.9	8.4	5.8	8.7	6.1	9.0	6.1	9.4	5.9	9.7	5.8
	110	43.0	7.6	5.6	7.8	5.8	8.2	5.7	8.5	6.0	8.7	6.0	9.1	5.8	9.5	5.7
100 (11.2)	68	20.0	9.9	7.3	10.6	7.7	11.3	7.6	12.0	8.2	12.5	8.2	13.2	8.1	13.9	7.9
	73	22.5	9.9	7.3	10.6	7.7	11.3	7.6	12.0	8.2	12.5	8.2	13.2	8.1	13.9	7.9
	77	25.0	9.9	7.3	10.6	7.7	11.3	7.6	12.0	8.2	12.4	8.2	13.1	8.0	13.7	7.9
	82	27.5	9.8	7.2	10.5	7.6	11.2	7.6	11.8	8.1	12.2	8.1	12.8	7.9	13.4	7.7
	86	30.0	9.8	7.2	10.4	7.6	11.0	7.5	11.6	8.0	12.0	8.0	12.6	7.8	13.2	7.7
	91	32.5	9.7	7.2	10.3	7.5	10.9	7.4	11.4	7.9	11.7	7.9	12.3	7.7	12.9	7.5
	95	35.0	9.7	7.2	10.2	7.5	10.7	7.4	11.2	7.8	11.6	7.8	12.1	7.6	12.7	7.5
	100	37.5	9.6	7.1	10.0	7.4	10.6	7.3	11.0	7.8	11.3	7.7	11.8	7.5	12.4	7.4
	104	40.0	9.6	7.1	9.9	7.3	10.4	7.2	10.8	7.7	11.1	7.6	11.6	7.5	12.1	7.3
	110	43.0	9.5	7.1	9.8	7.3	10.2	7.1	10.6	7.6	10.9	7.5	11.3	7.3	11.8	7.1
125 (14.0)	68	20.0	12.3	8.8	13.3	9.3	14.1	9.3	15.0	9.9	15.6	9.9	16.5	9.8	17.4	9.6
	73	22.5	12.3	8.8	13.3	9.3	14.1	9.3	15.0	9.9	15.6	9.9	16.5	9.8	17.4	9.6
	77	25.0	12.3	8.8	13.3	9.3	14.1	9.3	15.0	9.9	15.5	9.9	16.3	9.7	17.2	9.5
	82	27.5	12.3	8.8	13.2	9.3	14.0	9.2	14.7	9.8	15.2	9.8	16.0	9.6	16.8	9.4
	86	30.0	12.2	8.8	13.0	9.2	13.8	9.1	14.5	9.7	15.0	9.7	15.7	9.5	16.5	9.2
	91	32.5	12.2	8.7	12.8	9.1	13.6	9.0	14.2	9.6	14.7	9.5	15.4	9.3	16.1	9.1
	95	35.0	12.1	8.7	12.7	9.0	13.4	8.9	14.0	9.5	14.4	9.4	15.1	9.2	15.8	9.0
	100	37.5	12.0	8.6	12.5	9.0	13.2	8.8	13.8	9.4	14.2	9.3	14.8	9.1	15.5	8.9
	104	40.0	12.0	8.6	12.4	8.9	13.0	8.7	13.6	9.3	13.9	9.2	14.5	9.0	15.2	8.7
	110	43.0	11.9	8.6	12.2	8.8	12.8	8.6	13.3	9.1	13.6	9.0	14.2	8.8	14.7	8.6

kcal/h = kW x 860, Btu/h = kW x 3,412

F7. Cooling capacity with PQHY-P200-900Y(S)HM PQRY-P200-600Y(S)HM

PLFY-P-VCM-E

CA : Capacity(kW) SHC : Sensible Heat Capacity(kW)

Model size (Rated kW)	Water temp.		Indoor air temp.													
			71 ˚FDB / 59˚FWB		73˚FDB / 61˚FWB		77˚FDB / 64˚FWB		81˚FDB / 66˚FWB		82˚FDB / 68˚FWB		86˚FDB / 72˚FWB		90˚FDB / 75˚FWB	
			21.5˚CDB / 15˚CWB		23˚CDB / 16˚CWB		25˚CDB / 18˚CWB		27˚CDB / 19˚CWB		28˚CDB / 20˚CWB		30˚CDB / 22˚CWB		32˚CDB / 24˚CWB	
	˚F	˚C	CA	SHC	CA	SHC	CA	SHC	CA	SHC	CA	SHC	CA	SHC	CA	SHC
20 (2.2)	50	10.0	2.0	1.7	2.0	1.8	2.1	1.8	2.2	1.9	2.2	1.9	2.2	1.8	2.2	1.7
	68	20.0	2.0	1.7	2.0	1.8	2.1	1.8	2.2	1.9	2.2	1.9	2.2	1.8	2.2	1.7
	86	30.0	2.0	1.7	2.0	1.8	2.1	1.8	2.2	1.9	2.2	1.9	2.2	1.8	2.2	1.7
	104	40.0	1.8	1.6	1.8	1.7	1.9	1.7	2.0	1.8	2.0	1.8	2.0	1.7	2.0	1.6
	113	45.0	1.7	1.6	1.7	1.6	1.8	1.6	1.8	1.8	1.8	1.7	1.8	1.7	1.8	1.6
25 (2.8)	50	10.0	2.5	2.1	2.6	2.1	2.7	2.1	2.8	2.3	2.8	2.2	2.8	2.1	2.8	2.0
	68	20.0	2.5	2.1	2.6	2.1	2.7	2.1	2.8	2.3	2.8	2.2	2.8	2.1	2.8	2.0
	86	30.0	2.5	2.1	2.6	2.1	2.7	2.1	2.8	2.3	2.8	2.2	2.8	2.1	2.8	2.0
	104	40.0	2.2	1.9	2.3	2.0	2.4	2.0	2.5	2.1	2.5	2.1	2.5	2.0	2.5	1.9
	113	45.0	2.1	1.9	2.2	2.0	2.3	1.9	2.3	2.1	2.3	2.0	2.3	2.0	2.3	1.9
32 (3.6)	50	10.0	3.2	2.5	3.3	2.6	3.5	2.6	3.6	2.7	3.6	2.6	3.6	2.5	3.6	2.4
	68	20.0	3.2	2.5	3.3	2.6	3.5	2.6	3.6	2.7	3.6	2.6	3.6	2.5	3.6	2.4
	86	30.0	3.2	2.5	3.3	2.6	3.5	2.6	3.6	2.7	3.6	2.6	3.6	2.5	3.6	2.4
	104	40.0	2.9	2.3	3.0	2.4	3.1	2.4	3.2	2.5	3.2	2.5	3.2	2.4	3.2	2.3
	113	45.0	2.7	2.3	2.8	2.3	2.9	2.3	3.0	2.5	3.0	2.4	3.0	2.3	3.0	2.2
40 (4.5)	50	10.0	4.1	2.9	4.2	3.0	4.4	3.0	4.5	3.1	4.5	3.0	4.5	2.9	4.5	2.7
	68	20.0	4.1	2.9	4.2	3.0	4.4	3.0	4.5	3.1	4.5	3.0	4.5	2.9	4.5	2.7
	86	30.0	4.1	2.9	4.2	3.0	4.4	3.0	4.5	3.1	4.5	3.0	4.5	2.9	4.5	2.7
	104	40.0	3.6	2.7	3.7	2.8	3.9	2.7	4.0	2.9	4.0	2.8	4.0	2.7	4.0	2.6
	113	45.0	3.4	2.6	3.5	2.7	3.7	2.6	3.8	2.8	3.8	2.7	3.8	2.6	3.8	2.5

kcal/h = kW x 860, Btu/h = kW x 3,412

CT

F7. Cooling capacity with PQHY-P200-900Y(S)HM PQRY-P200-900Y(S)HM

PLFY-P-VBM-E

CA : Capacity(kW) SHC : Sensible Heat Capacity(kW)

Model size (Rated kW)	Water temp.		Indoor air temp.													
			71 ˚FDB / 59˚FWB		73˚FDB / 61˚FWB		77˚FDB / 64˚FWB		81˚FDB / 66˚FWB		82˚FDB / 68˚FWB		86˚FDB / 72˚FWB		90˚FDB / 75˚FWB	
			21.5˚CDB / 15˚CWB		23˚CDB / 16˚CWB		25˚CDB / 18˚CWB		27˚CDB / 19˚CWB		28˚CDB / 20˚CWB		30˚CDB / 22˚CWB		32˚CDB / 24˚CWB	
	˚F	˚C	CA	SHC	CA	SHC	CA	SHC	CA	SHC	CA	SHC	CA	SHC	CA	SHC
32 (3.6)	50	10.0	3.2	2.8	3.3	2.8	3.5	2.8	3.6	3.0	3.6	2.9	3.6	2.8	3.6	2.7
	68	20.0	3.2	2.8	3.3	2.8	3.5	2.8	3.6	3.0	3.6	2.9	3.6	2.8	3.6	2.7
	86	30.0	3.2	2.8	3.3	2.8	3.5	2.8	3.6	3.0	3.6	2.9	3.6	2.8	3.6	2.7
	104	40.0	2.9	2.6	3.0	2.7	3.1	2.7	3.2	2.8	3.2	2.8	3.2	2.7	3.2	2.6
	113	45.0	2.7	2.5	2.8	2.6	2.9	2.6	3.0	2.8	3.0	2.7	3.0	2.6	3.0	2.5
40 (4.5)	50	10.0	4.1	3.3	4.2	3.5	4.4	3.4	4.5	3.6	4.5	3.6	4.5	3.4	4.5	3.3
	68	20.0	4.1	3.3	4.2	3.5	4.4	3.4	4.5	3.6	4.5	3.6	4.5	3.4	4.5	3.3
	86	30.0	4.1	3.3	4.2	3.5	4.4	3.4	4.5	3.6	4.5	3.6	4.5	3.4	4.5	3.3
	104	40.0	3.6	3.1	3.7	3.3	3.9	3.2	4.0	3.4	4.0	3.4	4.0	3.2	4.0	3.1
	113	45.0	3.4	3.0	3.5	3.2	3.7	3.1	3.8	3.3	3.8	3.3	3.8	3.2	3.8	3.1
50 (5.6)	50	10.0	5.0	3.9	5.2	4.0	5.5	3.9	5.6	4.1	5.6	4.0	5.6	3.9	5.6	3.7
	68	20.0	5.0	3.9	5.2	4.0	5.5	3.9	5.6	4.1	5.6	4.0	5.6	3.9	5.6	3.7
	86	30.0	5.0	3.9	5.2	4.0	5.5	3.9	5.6	4.1	5.6	4.0	5.6	3.9	5.6	3.7
	104	40.0	4.5	3.6	4.6	3.7	4.9	3.6	5.0	3.9	5.0	3.8	5.0	3.6	5.0	3.5
	113	45.0	4.2	3.5	4.3	3.6	4.6	3.5	4.7	3.8	4.7	3.7	4.7	3.5	4.7	3.4
63 (7.1)	50	10.0	6.4	4.7	6.6	4.9	6.9	4.8	7.1	5.0	7.1	4.9	7.1	4.7	7.1	4.5
	68	20.0	6.4	4.7	6.6	4.9	6.9	4.8	7.1	5.0	7.1	4.9	7.1	4.7	7.1	4.5
	86	30.0	6.4	4.7	6.6	4.9	6.9	4.8	7.1	5.0	7.1	4.9	7.1	4.7	7.1	4.5
	104	40.0	5.7	4.4	5.8	4.5	6.2	4.4	6.3	4.7	6.3	4.6	6.3	4.4	6.3	4.2
	113	45.0	5.3	4.2	5.5	4.3	5.8	4.3	5.9	4.6	5.9	4.5	5.9	4.3	5.9	4.1
80 (9.0)	50	10.0	8.1	5.9	8.3	6.0	8.8	5.9	9.0	6.3	9.0	6.1	9.0	5.8	9.0	5.5
	68	20.0	8.1	5.9	8.3	6.0	8.8	5.9	9.0	6.3	9.0	6.1	9.0	5.8	9.0	5.5
	86	30.0	8.1	5.9	8.3	6.0	8.8	5.9	9.0	6.3	9.0	6.1	9.0	5.8	9.0	5.5
	104	40.0	7.2	5.4	7.4	5.6	7.8	5.5	8.0	5.8	8.0	5.7	8.0	5.4	8.0	5.2
	113	45.0	6.8	5.2	7.0	5.4	7.3	5.3	7.5	5.6	7.5	5.5	7.5	5.2	7.5	5.0
100 (11.2)	50	10.0	10.1	7.4	10.4	7.5	10.9	7.4	11.2	7.8	11.2	7.6	11.2	7.3	11.2	6.9
	68	20.0	10.1	7.4	10.4	7.5	10.9	7.4	11.2	7.8	11.2	7.6	11.2	7.3	11.2	6.9
	86	30.0	10.1	7.4	10.4	7.5	10.9	7.4	11.2	7.8	11.2	7.6	11.2	7.3	11.2	6.9
	104	40.0	9.0	6.8	9.2	7.0	9.7	6.9	10.0	7.3	10.0	7.1	10.0	6.8	10.0	6.5
	113	45.0	8.4	6.5	8.7	6.7	9.1	6.6	9.4	7.0	9.4	6.9	9.4	6.6	9.4	6.3
125 (14.0)	50	10.0	12.6	8.9	13.0	9.2	13.7	9.0	14.0	9.5	14.0	9.2	14.0	8.8	14.0	8.3
	68	20.0	12.6	8.9	13.0	9.2	13.7	9.0	14.0	9.5	14.0	9.2	14.0	8.8	14.0	8.3
	86	30.0	12.6	8.9	13.0	9.2	13.7	9.0	14.0	9.5	14.0	9.2	14.0	8.8	14.0	8.3
	104	40.0	11.2	8.2	11.5	8.4	12.1	8.3	12.5	8.8	12.5	8.6	12.5	8.2	12.5	7.8
	113	45.0	10.5	7.9	10.8	8.1	11.4	8.0	11.7	8.4	11.7	8.2	11.7	7.9	11.7	7.5

kcal/h = kW x 860, Btu/h = kW x 3,412

F8. Cooling capacity with PUMY-P100,125,140YHMB,VHMB

PLFY-P-VCM-E

CA : Capacity(kW) SHC : Sensible Heat Capacity(kW)

Model size (Rated kW)	Outdoor air temp.		Indoor air temp.													
			71 ˚FDB / 59˚FWB		73˚FDB / 61˚FWB		77˚FDB / 64˚FWB		81˚FDB / 66˚FWB		82˚FDB / 68˚FWB		86˚FDB / 72˚FWB		90˚FDB / 75˚FWB	
			21.5˚CDB / 15˚CWB		23˚CDB / 16˚CWB		25˚CDB / 18˚CWB		27˚CDB / 19˚CWB		28˚CDB / 20˚CWB		30˚CDB / 22˚CWB		32˚CDB / 24˚CWB	
	˚FDB	˚CDB	CA	SHC	CA	SHC	CA	SHC	CA	SHC	CA	SHC	CA	SHC	CA	SHC
20 (2.2)	68	20.0	2.1	1.8	2.2	1.8	2.3	1.8	2.4	2.0	2.4	1.9	2.6	1.9	2.7	1.9
	73	22.5	2.0	1.8	2.1	1.8	2.3	1.8	2.3	1.9	2.4	1.9	2.6	1.9	2.7	1.9
	77	25.0	2.0	1.7	2.1	1.8	2.2	1.8	2.3	1.9	2.4	1.9	2.5	1.9	2.6	1.9
	82	27.5	2.0	1.7	2.1	1.8	2.2	1.8	2.3	1.9	2.4	1.9	2.5	1.9	2.6	1.9
	86	30.0	2.0	1.7	2.1	1.8	2.2	1.8	2.3	1.9	2.3	1.9	2.5	1.9	2.6	1.8
	91	32.5	1.9	1.7	2.0	1.8	2.2	1.8	2.2	1.9	2.3	1.9	2.4	1.9	2.6	1.8
	95	35.0	1.9	1.7	2.0	1.8	2.1	1.8	2.2	1.9	2.3	1.9	2.4	1.9	2.5	1.8
	100	37.5	1.9	1.7	2.0	1.8	2.1	1.8	2.2	1.9	2.2	1.9	2.4	1.9	2.5	1.8
	104	40.0	1.8	1.7	1.9	1.7	2.1	1.7	2.1	1.9	2.2	1.9	2.4	1.8	2.5	1.8
	110	43.0	1.8	1.6	1.9	1.7	2.1	1.7	2.1	1.9	2.2	1.8	2.3	1.8	2.4	1.8
25 (2.8)	68	20.0	2.6	2.1	2.8	2.2	2.9	2.2	3.0	2.3	3.1	2.3	3.3	2.3	3.4	2.2
	73	22.5	2.6	2.1	2.7	2.2	2.9	2.2	3.0	2.3	3.1	2.3	3.2	2.3	3.4	2.2
	77	25.0	2.6	2.1	2.7	2.2	2.9	2.2	2.9	2.3	3.0	2.3	3.2	2.3	3.4	2.2
	82	27.5	2.5	2.1	2.7	2.2	2.8	2.2	2.9	2.3	3.0	2.3	3.2	2.3	3.3	2.2
	86	30.0	2.5	2.1	2.6	2.2	2.8	2.1	2.9	2.3	3.0	2.3	3.2	2.2	3.3	2.2
	91	32.5	2.5	2.1	2.6	2.1	2.8	2.1	2.8	2.3	2.9	2.3	3.1	2.2	3.3	2.2
	95	35.0	2.4	2.0	2.6	2.1	2.7	2.1	2.8	2.3	2.9	2.2	3.1	2.2	3.2	2.2
	100	37.5	2.4	2.0	2.5	2.1	2.7	2.1	2.8	2.2	2.8	2.2	3.0	2.2	3.2	2.2
	104	40.0	2.3	2.0	2.5	2.1	2.7	2.1	2.7	2.2	2.8	2.2	3.0	2.2	3.2	2.2
	110	43.0	2.3	2.0	2.4	2.1	2.6	2.1	2.7	2.2	2.7	2.2	3.0	2.2	3.1	2.1
32 (3.6)	68	20.0	3.4	2.6	3.6	2.7	3.7	2.7	3.9	2.8	4.0	2.8	4.2	2.8	4.4	2.7
	73	22.5	3.3	2.6	3.5	2.7	3.7	2.6	3.8	2.8	4.0	2.8	4.2	2.8	4.4	2.7
	77	25.0	3.3	2.6	3.5	2.7	3.7	2.6	3.8	2.8	3.9	2.8	4.1	2.7	4.3	2.7
	82	27.5	3.3	2.5	3.4	2.6	3.6	2.6	3.7	2.8	3.9	2.8	4.1	2.7	4.3	2.7
	86	30.0	3.2	2.5	3.4	2.6	3.6	2.6	3.7	2.8	3.8	2.7	4.1	2.7	4.2	2.6
	91	32.5	3.2	2.5	3.3	2.6	3.6	2.6	3.7	2.7	3.8	2.7	4.0	2.7	4.2	2.6
	95	35.0	3.1	2.5	3.3	2.6	3.5	2.6	3.6	2.7	3.7	2.7	4.0	2.7	4.2	2.6
	100	37.5	3.1	2.4	3.2	2.5	3.5	2.5	3.6	2.7	3.7	2.7	3.9	2.7	4.1	2.6
	104	40.0	3.0	2.4	3.2	2.5	3.4	2.5	3.5	2.7	3.6	2.6	3.9	2.6	4.1	2.6
	110	43.0	2.9	2.4	3.1	2.5	3.4	2.5	3.4	2.6	3.5	2.6	3.8	2.6	4.0	2.6
40 (4.5)	68	20.0	4.2	3.0	4.4	3.1	4.7	3.1	4.8	3.3	5.0	3.3	5.3	3.2	5.5	3.1
	73	22.5	4.2	3.0	4.4	3.1	4.6	3.1	4.8	3.2	4.9	3.2	5.2	3.2	5.5	3.1
	77	25.0	4.1	3.0	4.3	3.1	4.6	3.1	4.7	3.2	4.9	3.2	5.2	3.2	5.4	3.1
	82	27.5	4.1	3.0	4.3	3.1	4.5	3.0	4.7	3.2	4.8	3.2	5.1	3.1	5.4	3.1
	86	30.0	4.0	2.9	4.2	3.0	4.5	3.0	4.6	3.2	4.8	3.2	5.1	3.1	5.3	3.0
	91	32.5	4.0	2.9	4.2	3.0	4.4	3.0	4.6	3.1	4.7	3.1	5.0	3.1	5.3	3.0
	95	35.0	3.9	2.9	4.1	3.0	4.4	3.0	4.5	3.1	4.6	3.1	4.9	3.1	5.2	3.0
	100	37.5	3.8	2.8	4.0	2.9	4.3	2.9	4.5	3.1	4.6	3.1	4.9	3.0	5.1	3.0
	104	40.0	3.8	2.8	4.0	2.9	4.3	2.9	4.4	3.1	4.5	3.0	4.8	3.0	5.1	3.0
	110	43.0	3.7	2.7	3.9	2.9	4.2	2.9	4.3	3.0	4.4	3.0	4.8	3.0	5.0	2.9

kcal/h = kW x 860, Btu/h = kW x 3,412

CT

F8. Cooling capacity with PUMY-P100,125,140YHMB,VHMB

PLFY-P-VBM-E

CA : Capacity(kW) SHC : Sensible Heat Capacity(kW)

Model size (Rated kW)	Outdoor air temp.		Indoor air temp.													
			71 ˚FDB / 59˚FWB		73˚FDB / 61˚FWB		77˚FDB / 64˚FWB		81˚FDB / 66˚FWB		82˚FDB / 68˚FWB		86˚FDB / 72˚FWB		90˚FDB / 75˚FWB	
			21.5˚CDB / 15˚CWB		23˚CDB / 16˚CWB		25˚CDB / 18˚CWB		27˚CDB / 19˚CWB		28˚CDB / 20˚CWB		30˚CDB / 22˚CWB		32˚CDB / 24˚CWB	
	˚FDB	˚CDB	CA	SHC	CA	SHC	CA	SHC	CA	SHC	CA	SHC	CA	SHC	CA	SHC
32 (3.6)	68	20.0	3.4	2.8	3.6	2.9	3.7	2.9	3.9	3.1	4.0	3.1	4.2	3.1	4.4	3.0
	73	22.5	3.3	2.8	3.5	2.9	3.7	2.9	3.8	3.1	4.0	3.1	4.2	3.0	4.4	3.0
	77	25.0	3.3	2.8	3.5	2.9	3.7	2.9	3.8	3.1	3.9	3.1	4.1	3.0	4.3	3.0
	82	27.5	3.3	2.8	3.4	2.9	3.6	2.9	3.7	3.1	3.9	3.0	4.1	3.0	4.3	2.9
	86	30.0	3.2	2.7	3.4	2.9	3.6	2.8	3.7	3.0	3.8	3.0	4.1	3.0	4.2	2.9
	91	32.5	3.2	2.7	3.3	2.9	3.6	2.8	3.7	3.0	3.8	3.0	4.0	3.0	4.2	2.9
	95	35.0	3.1	2.7	3.3	2.8	3.5	2.8	3.6	3.0	3.7	3.0	4.0	3.0	4.2	2.9
	100	37.5	3.1	2.7	3.2	2.8	3.5	2.8	3.6	3.0	3.7	3.0	3.9	2.9	4.1	2.9
	104	40.0	3.0	2.6	3.2	2.8	3.4	2.8	3.5	3.0	3.6	2.9	3.9	2.9	4.1	2.9
	110	43.0	2.9	2.6	3.1	2.8	3.4	2.8	3.4	2.9	3.5	2.9	3.8	2.9	4.0	2.9
40 (4.5)	68	20.0	4.2	3.4	4.4	3.6	4.7	3.5	4.8	3.8	5.0	3.8	5.3	3.7	5.5	3.6
	73	22.5	4.2	3.4	4.4	3.6	4.6	3.5	4.8	3.8	4.9	3.7	5.2	3.7	5.5	3.6
	77	25.0	4.1	3.4	4.3	3.5	4.6	3.5	4.7	3.7	4.9	3.7	5.2	3.7	5.4	3.6
	82	27.5	4.1	3.4	4.3	3.5	4.5	3.5	4.7	3.7	4.8	3.7	5.1	3.6	5.4	3.6
	86	30.0	4.0	3.3	4.2	3.5	4.5	3.5	4.6	3.7	4.8	3.7	5.1	3.6	5.3	3.6
	91	32.5	4.0	3.3	4.2	3.5	4.4	3.4	4.6	3.7	4.7	3.6	5.0	3.6	5.3	3.5
	95	35.0	3.9	3.3	4.1	3.4	4.4	3.4	4.5	3.6	4.6	3.6	4.9	3.6	5.2	3.5
	100	37.5	3.8	3.2	4.0	3.4	4.3	3.4	4.5	3.6	4.6	3.6	4.9	3.6	5.1	3.5
	104	40.0	3.8	3.2	4.0	3.4	4.3	3.4	4.4	3.6	4.5	3.6	4.8	3.5	5.1	3.5
	110	43.0	3.7	3.2	3.9	3.3	4.2	3.3	4.3	3.6	4.4	3.5	4.8	3.5	5.0	3.4
50 (5.6)	68	20.0	5.3	4.0	5.5	4.1	5.8	4.1	6.0	4.3	6.2	4.3	6.6	4.2	6.9	4.1
	73	22.5	5.2	3.9	5.5	4.1	5.8	4.0	6.0	4.3	6.1	4.3	6.5	4.2	6.8	4.1
	77	25.0	5.2	3.9	5.4	4.1	5.7	4.0	5.9	4.3	6.1	4.2	6.4	4.2	6.7	4.1
	82	27.5	5.1	3.9	5.3	4.0	5.7	4.0	5.8	4.2	6.0	4.2	6.4	4.2	6.7	4.1
	86	30.0	5.0	3.8	5.3	4.0	5.6	4.0	5.8	4.2	5.9	4.2	6.3	4.1	6.6	4.0
	91	32.5	4.9	3.8	5.2	4.0	5.5	3.9	5.7	4.2	5.9	4.1	6.2	4.1	6.5	4.0
	95	35.0	4.9	3.8	5.1	3.9	5.5	3.9	5.6	4.1	5.8	4.1	6.2	4.1	6.5	4.0
	100	37.5	4.8	3.7	5.0	3.9	5.4	3.9	5.5	4.1	5.7	4.1	6.1	4.0	6.4	4.0
	104	40.0	4.7	3.7	4.9	3.9	5.3	3.9	5.5	4.1	5.6	4.0	6.0	4.0	6.3	3.9
	110	43.0	4.6	3.6	4.8	3.8	5.2	3.8	5.4	4.0	5.5	4.0	5.9	4.0	6.2	3.9
63 (7.1)	68	20.0	6.7	4.9	7.0	5.1	7.4	5.0	7.6	5.3	7.9	5.3	8.3	5.2	8.7	5.1
	73	22.5	6.6	4.8	6.9	5.0	7.3	5.0	7.6	5.3	7.8	5.2	8.2	5.1	8.6	5.0
	77	25.0	6.5	4.8	6.9	5.0	7.2	4.9	7.5	5.2	7.7	5.2	8.2	5.1	8.5	5.0
	82	27.5	6.5	4.8	6.8	5.0	7.2	4.9	7.4	5.2	7.6	5.2	8.1	5.1	8.5	5.0
	86	30.0	6.4	4.7	6.7	4.9	7.1	4.9	7.3	5.1	7.5	5.1	8.0	5.0	8.4	4.9
	91	32.5	6.3	4.7	6.6	4.9	7.0	4.8	7.2	5.1	7.4	5.1	7.9	5.0	8.3	4.9
	95	35.0	6.2	4.6	6.5	4.8	6.9	4.8	7.1	5.1	7.3	5.0	7.8	5.0	8.2	4.9
	100	37.5	6.1	4.6	6.4	4.8	6.8	4.8	7.0	5.0	7.2	5.0	7.7	4.9	8.1	4.8
	104	40.0	5.9	4.5	6.3	4.7	6.8	4.7	6.9	5.0	7.1	4.9	7.6	4.9	8.0	4.8
	110	43.0	5.8	4.4	6.1	4.6	6.6	4.7	6.8	4.9	6.9	4.9	7.5	4.9	7.9	4.8
80 (9.0)	68	20.0	8.5	6.1	8.9	6.3	9.4	6.2	9.7	6.6	10.0	6.5	10.5	6.4	11.0	6.3
	73	22.5	8.4	6.0	8.8	6.3	9.3	6.2	9.6	6.5	9.9	6.5	10.4	6.4	10.9	6.2
	77	25.0	8.3	6.0	8.7	6.2	9.2	6.1	9.5	6.5	9.8	6.4	10.3	6.3	10.8	6.2
	82	27.5	8.2	5.9	8.6	6.2	9.1	6.1	9.4	6.4	9.7	6.4	10.2	6.3	10.7	6.2
	86	30.0	8.1	5.9	8.5	6.1	9.0	6.0	9.3	6.4	9.5	6.3	10.1	6.3	10.6	6.1
	91	32.5	7.9	5.8	8.4	6.0	8.9	6.0	9.1	6.3	9.4	6.3	10.0	6.2	10.5	6.1
	95	35.0	7.8	5.7	8.2	6.0	8.8	6.0	9.0	6.3	9.3	6.2	9.9	6.2	10.4	6.0
	100	37.5	7.7	5.7	8.1	5.9	8.7	5.9	8.9	6.2	9.1	6.2	9.8	6.1	10.3	6.0
	104	40.0	7.5	5.6	8.0	5.8	8.6	5.8	8.8	6.2	9.0	6.1	9.7	6.1	10.1	5.9
	110	43.0	7.3	5.5	7.8	5.8	8.4	5.8	8.6	6.1	8.8	6.0	9.5	6.0	10.0	5.9
100 (11.2)	68	20.0	10.5	7.6	11.1	7.9	11.7	7.8	12.0	8.2	12.4	8.2	13.1	8.0	13.7	7.9
	73	22.5	10.4	7.5	10.9	7.8	11.6	7.7	11.9	8.2	12.3	8.1	13.0	8.0	13.6	7.8
	77	25.0	10.3	7.5	10.8	7.8	11.4	7.7	11.8	8.1	12.2	8.1	12.9	7.9	13.5	7.8
	82	27.5	10.2	7.4	10.7	7.7	11.3	7.6	11.7	8.0	12.0	8.0	12.7	7.9	13.4	7.7
	86	30.0	10.0	7.3	10.5	7.6	11.2	7.6	11.5	8.0	11.9	7.9	12.6	7.8	13.2	7.7
	91	32.5	9.9	7.3	10.4	7.6	11.1	7.5	11.4	7.9	11.7	7.9	12.5	7.8	13.1	7.6
	95	35.0	9.7	7.2	10.2	7.5	10.9	7.4	11.2	7.8	11.5	7.8	12.3	7.7	12.9	7.6
	100	37.5	9.5	7.1	10.1	7.4	10.8	7.4	11.1	7.8	11.4	7.7	12.2	7.7	12.8	7.5
	104	40.0	9.4	7.0	9.9	7.3	10.7	7.3	10.9	7.7	11.2	7.6	12.0	7.6	12.6	7.4
	110	43.0	9.1	6.9	9.7	7.2	10.5	7.2	10.7	7.6	11.0	7.5	11.8	7.5	12.4	7.4
125 (14.0)	68	20.0	13.2	9.2	13.8	9.6	14.6	9.5	15.1	10.0	15.5	9.9	16.4	9.7	17.2	9.5
	73	22.5	13.0	9.2	13.7	9.5	14.4	9.4	14.9	9.9	15.4	9.8	16.2	9.7	17.0	9.5
	77	25.0	12.9	9.1	13.5	9.5	14.3	9.3	14.7	9.8	15.2	9.8	16.1	9.6	16.9	9.4
	82	27.5	12.7	9.0	13.4	9.4	14.1	9.3	14.6	9.7	15.0	9.7	15.9	9.5	16.7	9.3
	86	30.0	12.5	8.9	13.2	9.3	14.0	9.2	14.4	9.7	14.8	9.6	15.8	9.5	16.5	9.3
	91	32.5	12.4	8.8	13.0	9.2	13.8	9.1	14.2	9.6	14.6	9.5	15.6	9.4	16.3	9.2
	95	35.0	12.2	8.7	12.8	9.1	13.7	9.0	14.0	9.5	14.4	9.4	15.4	9.3	16.2	9.1
	100	37.5	11.9	8.6	12.6	9.0	13.5	9.0	13.8	9.4	14.2	9.3	15.2	9.3	16.0	9.1
	104	40.0	11.7	8.5	12.4	8.9	13.3	8.9	13.7	9.3	14.0	9.2	15.0	9.2	15.8	9.0
	110	43.0	11.4	8.3	12.1	8.7	13.1	8.8	13.4	9.2	13.7	9.1	14.8	9.1	15.6	8.9

kcal/h = kW x 860, Btu/h = kW x 3,412

G1. Cooling capacity with PUHY-P200, 250YHM/PUHY-EP200, 250YHM PURY-P200, 250YHM/PURY-EP200, 250YHM

PCFY-P-VKM-E

CA : Capacity(kW) SHC : Sensible Heat Capacity(kW)

Model size (Rated kW)	Outdoor air temp.		Indoor air temp.													
			71 ˚FDB / 59˚FWB		73˚FDB / 61˚FWB		77˚FDB / 64˚FWB		81˚FDB / 66˚FWB		82˚FDB / 68˚FWB		86˚FDB / 72˚FWB		90˚FDB / 75˚FWB	
			21.5˚CDB / 15˚CWB		23˚CDB / 16˚CWB		25˚CDB / 18˚CWB		27˚CDB / 19˚CWB		28˚CDB / 20˚CWB		30˚CDB / 22˚CWB		32˚CDB / 24˚CWB	
	˚FDB	˚CDB	CA	SHC	CA	SHC	CA	SHC	CA	SHC	CA	SHC	CA	SHC	CA	SHC
40 (4.5)	68	20.0	4.3	3.1	4.4	3.2	4.7	3.1	4.9	3.3	5.0	3.3	5.3	3.2	5.7	3.2
	73	22.5	4.3	3.1	4.4	3.2	4.7	3.1	4.9	3.3	5.0	3.3	5.3	3.2	5.7	3.2
	77	25.0	4.3	3.1	4.4	3.2	4.7	3.1	4.9	3.3	5.0	3.3	5.3	3.2	5.6	3.2
	82	27.5	4.3	3.1	4.4	3.2	4.6	3.1	4.8	3.3	4.9	3.3	5.2	3.2	5.5	3.2
	86	30.0	4.2	3.0	4.3	3.1	4.6	3.1	4.7	3.2	4.8	3.2	5.0	3.1	5.4	3.1
	91	32.5	4.1	3.0	4.2	3.1	4.5	3.0	4.6	3.2	4.7	3.2	5.0	3.1	5.3	3.1
	95	35.0	4.0	2.9	4.1	3.0	4.4	3.0	4.5	3.2	4.6	3.1	4.9	3.1	5.2	3.0
	100	37.5	3.9	2.9	4.1	3.0	4.3	3.0	4.4	3.1	4.5	3.1	4.8	3.0	5.0	3.0
	104	40.0	3.9	2.9	4.0	3.0	4.2	2.9	4.3	3.1	4.5	3.1	4.7	3.0	5.0	3.0
	110	43.0	3.8	2.8	3.9	2.9	4.1	2.9	4.2	3.0	4.3	3.0	4.5	2.9	4.8	2.9
63 (7.1)	68	20.0	6.7	4.8	7.0	4.9	7.5	4.9	7.7	5.2	7.9	5.1	8.4	5.1	9.0	5.0
	73	22.5	6.7	4.8	7.0	4.9	7.5	4.9	7.7	5.2	7.9	5.1	8.4	5.1	9.0	5.0
	77	25.0	6.7	4.8	7.0	4.9	7.5	4.9	7.7	5.2	7.8	5.1	8.3	5.0	8.8	4.9
	82	27.5	6.7	4.8	6.9	4.9	7.3	4.8	7.5	5.1	7.7	5.0	8.1	4.9	8.7	4.9
	86	30.0	6.6	4.7	6.8	4.8	7.2	4.8	7.4	5.0	7.6	5.0	8.0	4.9	8.5	4.8
	91	32.5	6.5	4.7	6.7	4.8	7.0	4.7	7.2	4.9	7.4	4.9	7.8	4.8	8.3	4.8
	95	35.0	6.4	4.6	6.5	4.7	6.9	4.6	7.1	4.9	7.3	4.9	7.7	4.8	8.1	4.7
	100	37.5	6.2	4.5	6.4	4.6	6.8	4.6	6.9	4.8	7.1	4.8	7.5	4.7	8.0	4.6
	104	40.0	6.1	4.5	6.3	4.6	6.7	4.5	6.8	4.8	7.0	4.7	7.3	4.6	7.8	4.6
	110	43.0	6.0	4.4	6.1	4.5	6.5	4.5	6.6	4.7	6.8	4.6	7.2	4.6	7.6	4.5
100 (11.2)	68	20.0	10.6	7.4	11.0	7.6	11.8	7.6	12.1	8.0	12.5	7.9	13.2	7.8	14.2	7.8
	73	22.5	10.6	7.4	11.0	7.6	11.8	7.6	12.1	8.0	12.5	7.9	13.2	7.8	14.2	7.8
	77	25.0	10.6	7.4	11.0	7.6	11.8	7.6	12.1	8.0	12.4	7.9	13.1	7.8	13.9	7.7
	82	27.5	10.6	7.4	10.9	7.6	11.5	7.5	11.9	7.9	12.2	7.8	12.8	7.6	13.7	7.6
	86	30.0	10.4	7.3	10.7	7.5	11.3	7.4	11.6	7.7	11.9	7.7	12.5	7.5	13.4	7.5
	91	32.5	10.2	7.2	10.5	7.4	11.1	7.3	11.4	7.6	11.7	7.6	12.3	7.4	13.1	7.3
	95	35.0	10.0	7.1	10.3	7.3	10.9	7.2	11.2	7.5	11.5	7.5	12.1	7.4	12.8	7.2
	100	37.5	9.8	7.0	10.1	7.2	10.7	7.1	10.9	7.4	11.3	7.4	11.9	7.3	12.5	7.1
	104	40.0	9.6	6.9	9.9	7.1	10.5	7.0	10.8	7.4	11.1	7.3	11.6	7.1	12.3	7.0
	110	43.0	9.4	6.8	9.7	7.0	10.2	6.9	10.4	7.2	10.8	7.2	11.3	7.0	12.0	6.9
125 (14.0)	68	20.0	13.3	9.3	13.8	9.5	14.7	9.5	15.1	9.9	15.6	9.9	16.5	9.7	17.7	9.6
	73	22.5	13.3	9.3	13.8	9.5	14.7	9.5	15.1	9.9	15.6	9.9	16.5	9.7	17.7	9.6
	77	25.0	13.3	9.3	13.8	9.5	14.7	9.5	15.1	9.9	15.5	9.8	16.4	9.7	17.4	9.5
	82	27.5	13.2	9.2	13.7	9.5	14.4	9.3	14.8	9.8	15.3	9.7	16.0	9.5	17.1	9.4
	86	30.0	13.0	9.1	13.4	9.3	14.2	9.2	14.6	9.7	14.9	9.5	15.7	9.4	16.7	9.2
	91	32.5	12.7	8.9	13.2	9.2	13.9	9.1	14.2	9.5	14.6	9.4	15.4	9.2	16.4	9.1
	95	35.0	12.5	8.8	12.9	9.1	13.7	9.0	14.0	9.4	14.4	9.3	15.1	9.1	16.0	9.0
	100	37.5	12.3	8.7	12.6	8.9	13.4	8.8	13.7	9.2	14.1	9.2	14.8	9.0	15.7	8.9
	104	40.0	12.0	8.6	12.4	8.8	13.2	8.7	13.4	9.1	13.9	9.1	14.5	8.9	15.4	8.7
	110	43.0	11.8	8.5	12.1	8.7	12.8	8.5	13.0	8.9	13.4	8.9	14.1	8.7	15.0	8.6

kcal/h = kW x 860, Btu/h = kW x 3,412

CT

G2. Cooling capacity with PUHY-P300-400YHM /PUHY-EP300, 400Y(S)HM PURY-P300-400YHM /PURY-EP300, 400Y(S)HM

PCFY-P-VKM-E

CA : Capacity(kW) SHC : Sensible Heat Capacity(kW)

Model size (Rated kW)	Outdoor air temp.		Indoor air temp.													
			71 ˚FDB / 59˚FWB		73˚FDB / 61˚FWB		77˚FDB / 64˚FWB		81˚FDB / 66˚FWB		82˚FDB / 68˚FWB		86˚FDB / 72˚FWB		90˚FDB / 75˚FWB	
			21.5˚CDB / 15˚CWB		23˚CDB / 16˚CWB		25˚CDB / 18˚CWB		27˚CDB / 19˚CWB		28˚CDB / 20˚CWB		30˚CDB / 22˚CWB		32˚CDB / 24˚CWB	
	˚FDB	˚CDB	CA	SHC	CA	SHC	CA	SHC	CA	SHC	CA	SHC	CA	SHC	CA	SHC
40 (4.5)	68	20.0	4.4	3.1	4.5	3.2	4.9	3.2	5.0	3.4	5.2	3.4	5.5	3.3	5.9	3.3
	73	22.5	4.3	3.1	4.5	3.2	4.8	3.2	5.0	3.4	5.1	3.3	5.4	3.3	5.7	3.2
	77	25.0	4.3	3.1	4.4	3.2	4.7	3.1	4.9	3.3	5.0	3.3	5.3	3.2	5.6	3.2
	82	27.5	4.2	3.0	4.3	3.1	4.6	3.1	4.8	3.3	4.9	3.3	5.2	3.2	5.5	3.2
	86	30.0	4.1	3.0	4.2	3.1	4.5	3.0	4.7	3.2	4.8	3.2	5.1	3.2	5.4	3.1
	91	32.5	4.1	3.0	4.2	3.1	4.4	3.0	4.6	3.2	4.7	3.2	5.0	3.1	5.3	3.1
	95	35.0	4.0	2.9	4.1	3.0	4.3	3.0	4.5	3.2	4.6	3.1	4.9	3.1	5.2	3.0
	100	37.5	4.0	2.9	4.0	3.0	4.3	3.0	4.4	3.1	4.5	3.1	4.8	3.0	5.1	3.0
	104	40.0	3.9	2.9	3.9	2.9	4.2	2.9	4.3	3.1	4.4	3.0	4.7	3.0	5.0	3.0
	110	43.0	3.8	2.8	3.8	2.9	4.1	2.9	4.2	3.0	4.3	3.0	4.6	3.0	4.8	2.9
63 (7.1)	68	20.0	6.9	4.9	7.1	5.0	7.7	5.0	8.0	5.3	8.2	5.3	8.7	5.2	9.2	5.1
	73	22.5	6.9	4.9	7.1	5.0	7.6	5.0	7.8	5.2	8.1	5.2	8.5	5.1	9.1	5.1
	77	25.0	6.8	4.8	7.0	4.9	7.4	4.9	7.7	5.2	7.9	5.1	8.4	5.1	8.9	5.0
	82	27.5	6.6	4.7	6.8	4.8	7.3	4.8	7.5	5.1	7.8	5.1	8.2	5.0	8.7	4.9
	86	30.0	6.5	4.7	6.7	4.8	7.1	4.7	7.4	5.0	7.6	5.0	8.1	4.9	8.5	4.8
	91	32.5	6.4	4.6	6.6	4.7	7.0	4.7	7.2	4.9	7.5	4.9	7.9	4.9	8.4	4.8
	95	35.0	6.3	4.6	6.4	4.6	6.8	4.6	7.1	4.9	7.3	4.9	7.7	4.8	8.2	4.7
	100	37.5	6.2	4.5	6.3	4.6	6.7	4.5	6.9	4.8	7.2	4.8	7.6	4.7	8.0	4.6
	104	40.0	6.1	4.5	6.1	4.5	6.6	4.5	6.8	4.8	7.0	4.7	7.4	4.7	7.8	4.6
	110	43.0	6.0	4.4	6.0	4.4	6.4	4.4	6.6	4.7	6.8	4.6	7.2	4.6	7.6	4.5
100 (11.2)	68	20.0	10.9	7.6	11.3	7.8	12.1	7.8	12.5	8.2	12.9	8.1	13.7	8.0	14.6	7.9
	73	22.5	10.8	7.5	11.2	7.7	11.9	7.7	12.3	8.1	12.7	8.0	13.5	7.9	14.3	7.8
	77	25.0	10.7	7.5	11.0	7.6	11.7	7.6	12.1	8.0	12.5	7.9	13.2	7.8	14.0	7.7
	82	27.5	10.5	7.4	10.8	7.5	11.5	7.5	11.9	7.9	12.2	7.8	13.0	7.7	13.7	7.6
	86	30.0	10.3	7.3	10.5	7.4	11.3	7.4	11.6	7.7	12.0	7.7	12.8	7.6	13.4	7.5
	91	32.5	10.1	7.2	10.4	7.3	11.0	7.2	11.4	7.6	11.8	7.6	12.4	7.5	13.2	7.4
	95	35.0	10.0	7.1	10.1	7.2	10.8	7.1	11.2	7.5	11.5	7.5	12.2	7.4	12.9	7.3
	100	37.5	9.9	7.0	9.9	7.1	10.6	7.0	10.9	7.4	11.3	7.4	12.0	7.3	12.7	7.2
	104	40.0	9.7	6.9	9.7	7.0	10.4	7.0	10.7	7.3	11.0	7.3	11.7	7.2	12.4	7.1
	110	43.0	9.4	6.8	9.4	6.8	10.1	6.8	10.4	7.2	10.7	7.1	11.4	7.1	12.0	6.9
125 (14.0)	68	20.0	13.6	9.4	14.1	9.7	15.1	9.7	15.7	10.2	16.2	10.1	17.2	10.0	18.2	9.8
	73	22.5	13.5	9.4	14.0	9.6	14.9	9.6	15.4	10.0	15.9	10.0	16.8	9.8	17.9	9.7
	77	25.0	13.4	9.3	13.7	9.5	14.6	9.4	15.1	9.9	15.6	9.9	16.5	9.7	17.5	9.6
	82	27.5	13.1	9.1	13.4	9.3	14.4	9.3	14.8	9.8	15.3	9.7	16.2	9.6	17.2	9.4
	86	30.0	12.9	9.0	13.2	9.2	14.1	9.2	14.6	9.7	15.0	9.6	16.0	9.5	16.8	9.3
	91	32.5	12.7	8.9	13.0	9.1	13.8	9.0	14.3	9.5	14.7	9.5	15.5	9.3	16.5	9.2
	95	35.0	12.5	8.8	12.7	9.0	13.4	8.8	14.0	9.4	14.4	9.3	15.3	9.2	16.2	9.0
	100	37.5	12.3	8.7	12.4	8.8	13.2	8.7	13.7	9.2	14.1	9.2	15.0	9.1	15.8	8.9
	104	40.0	12.1	8.6	12.1	8.7	13.0	8.6	13.4	9.1	13.8	9.0	14.6	8.9	15.5	8.8
	110	43.0	11.8	8.5	11.8	8.5	12.6	8.5	13.0	8.9	13.4	8.9	14.2	8.7	15.1	8.6

kcal/h = kW x 860, Btu/h = kW x 3,412

G3. Cooling capacity with PUHY-P450-650Y(S)HM/PUHY-EP450-650YSHM PURY-P450-650YSHM/PURY-EP450-600YSHM

PCFY-P-VKM-E

CA : Capacity(kW) SHC : Sensible Heat Capacity(kW)

Model size (Rated kW)	Outdoor air temp.		Indoor air temp.													
			71 ˚FDB / 59˚FWB		73˚FDB / 61˚FWB		77˚FDB / 64˚FWB		81˚FDB / 66˚FWB		82˚FDB / 68˚FWB		86˚FDB / 72˚FWB		90˚FDB / 75˚FWB	
			21.5˚CDB / 15˚CWB		23˚CDB / 16˚CWB		25˚CDB / 18˚CWB		27˚CDB / 19˚CWB		28˚CDB / 20˚CWB		30˚CDB / 22˚CWB		32˚CDB / 24˚CWB	
	˚FDB	˚CDB	CA	SHC	CA	SHC	CA	SHC	CA	SHC	CA	SHC	CA	SHC	CA	SHC
40 (4.5)	68	20.0	4.3	3.1	4.4	3.2	4.7	3.1	4.8	3.3	5.0	3.3	5.3	3.2	5.7	3.2
	73	22.5	4.2	3.0	4.3	3.1	4.6	3.1	4.8	3.3	5.0	3.3	5.3	3.2	5.6	3.2
	77	25.0	4.2	3.0	4.3	3.1	4.6	3.1	4.7	3.2	4.9	3.3	5.2	3.2	5.6	3.2
	82	27.5	4.1	3.0	4.2	3.1	4.5	3.0	4.7	3.2	4.9	3.3	5.2	3.2	5.4	3.1
	86	30.0	4.1	3.0	4.2	3.1	4.5	3.0	4.6	3.2	4.8	3.2	5.1	3.2	5.4	3.1
	91	32.5	4.1	3.0	4.1	3.0	4.4	3.0	4.5	3.2	4.8	3.2	5.1	3.2	5.4	3.1
	95	35.0	4.0	2.9	4.1	3.0	4.4	3.0	4.5	3.2	4.7	3.2	5.0	3.1	5.4	3.1
	100	37.5	4.0	2.9	4.0	3.0	4.3	3.0	4.4	3.1	4.7	3.2	5.0	3.1	5.3	3.1
	104	40.0	3.9	2.9	4.0	3.0	4.3	3.0	4.4	3.1	4.6	3.1	5.0	3.1	5.3	3.1
	110	43.0	3.9	2.9	3.9	2.9	4.2	2.9	4.3	3.1	4.5	3.1	4.9	3.1	5.2	3.0
63 (7.1)	68	20.0	6.7	4.8	6.9	4.9	7.4	4.9	7.6	5.1	7.9	5.1	8.4	5.1	8.9	5.0
	73	22.5	6.7	4.8	6.9	4.9	7.3	4.8	7.5	5.1	7.8	5.1	8.3	5.0	8.8	4.9
	77	25.0	6.6	4.7	6.8	4.8	7.2	4.8	7.5	5.1	7.7	5.0	8.2	5.0	8.8	4.9
	82	27.5	6.5	4.7	6.7	4.8	7.2	4.8	7.4	5.0	7.7	5.0	8.2	5.0	8.5	4.8
	86	30.0	6.5	4.7	6.6	4.7	7.1	4.7	7.3	5.0	7.6	5.0	8.1	4.9	8.6	4.9
	91	32.5	6.4	4.6	6.5	4.7	7.0	4.7	7.2	4.9	7.5	4.9	8.0	4.9	8.5	4.8
	95	35.0	6.3	4.6	6.4	4.6	6.9	4.6	7.1	4.9	7.4	4.9	8.0	4.9	8.4	4.8
	100	37.5	6.2	4.5	6.4	4.6	6.8	4.6	7.0	4.8	7.3	4.9	7.8	4.8	8.4	4.8
	104	40.0	6.1	4.5	6.3	4.6	6.8	4.6	6.9	4.8	7.2	4.8	7.8	4.8	8.3	4.8
	110	43.0	6.1	4.5	6.2	4.5	6.7	4.5	6.8	4.8	7.2	4.8	7.7	4.8	8.2	4.7
100 (11.2)	68	20.0	10.6	7.4	10.9	7.6	11.6	7.5	12.0	7.9	12.5	7.9	13.2	7.8	14.1	7.7
	73	22.5	10.5	7.4	10.8	7.5	11.5	7.5	11.9	7.9	12.3	7.8	13.2	7.8	13.9	7.7
	77	25.0	10.4	7.3	10.7	7.5	11.4	7.4	11.8	7.8	12.2	7.8	13.0	7.7	13.8	7.6
	82	27.5	10.3	7.3	10.5	7.4	11.3	7.4	11.6	7.7	12.1	7.8	12.9	7.7	13.4	7.5
	86	30.0	10.2	7.2	10.4	7.3	11.2	7.3	11.5	7.7	12.0	7.7	12.8	7.6	13.6	7.5
	91	32.5	10.1	7.2	10.3	7.3	11.0	7.2	11.3	7.6	11.9	7.7	12.7	7.6	13.4	7.5
	95	35.0	10.0	7.1	10.1	7.2	10.9	7.2	11.2	7.5	11.6	7.5	12.5	7.5	13.3	7.4
	100	37.5	9.9	7.0	10.0	7.1	10.8	7.1	11.0	7.5	11.6	7.5	12.4	7.5	13.2	7.4
	104	40.0	9.7	6.9	9.9	7.1	10.7	7.1	10.9	7.4	11.4	7.4	12.3	7.4	13.1	7.3
	110	43.0	9.6	6.9	9.8	7.0	10.5	7.0	10.8	7.4	11.3	7.4	12.1	7.4	13.0	7.3
125 (14.0)	68	20.0	13.2	9.2	13.7	9.5	14.6	9.4	15.0	9.8	15.6	9.9	16.5	9.7	17.6	9.6
	73	22.5	13.2	9.2	13.5	9.4	14.4	9.3	14.8	9.8	15.4	9.8	16.5	9.7	17.4	9.5
	77	25.0	13.0	9.1	13.4	9.3	14.3	9.3	14.7	9.7	15.3	9.7	16.2	9.6	17.3	9.5
	82	27.5	12.9	9.0	13.2	9.2	14.1	9.2	14.6	9.7	15.1	9.6	16.1	9.5	16.8	9.3
	86	30.0	12.7	8.9	13.0	9.1	14.0	9.1	14.4	9.6	15.0	9.6	16.0	9.5	16.9	9.3
	91	32.5	12.6	8.9	12.9	9.1	13.7	9.0	14.1	9.4	14.8	9.5	15.8	9.4	16.8	9.3
	95	35.0	12.5	8.8	12.7	9.0	13.7	9.0	14.0	9.4	14.6	9.4	15.7	9.4	16.7	9.2
	100	37.5	12.3	8.7	12.6	8.9	13.4	8.8	13.8	9.3	14.5	9.4	15.5	9.3	16.5	9.2
	104	40.0	12.1	8.6	12.4	8.8	13.4	8.8	13.6	9.2	14.3	9.3	15.4	9.2	16.4	9.1
	110	43.0	12.0	8.6	12.3	8.8	13.2	8.7	13.4	9.1	14.1	9.2	15.1	9.1	16.2	9.0

kcal/h = kW x 860, Btu/h = kW x 3,412

CT

G4. Cooling capacity with PUHY-P700-800YSHM/PUHY-EP700-800YSHM PURY-P700-800YSHM

PCFY-P-VKM-E

CA : Capacity(kW) SHC : Sensible Heat Capacity(kW)

Model size (Rated kW)	Outdoor air temp.		Indoor air temp.													
			71 ˚FDB / 59˚FWB		73˚FDB / 61˚FWB		77˚FDB / 64˚FWB		81˚FDB / 66˚FWB		82˚FDB / 68˚FWB		86˚FDB / 72˚FWB		90˚FDB / 75˚FWB	
			21.5˚CDB / 15˚CWB		23˚CDB / 16˚CWB		25˚CDB / 18˚CWB		27˚CDB / 19˚CWB		28˚CDB / 20˚CWB		30˚CDB / 22˚CWB		32˚CDB / 24˚CWB	
	˚FDB	˚CDB	CA	SHC	CA	SHC	CA	SHC	CA	SHC	CA	SHC	CA	SHC	CA	SHC
40 (4.5)	68	20.0	4.3	3.1	4.5	3.2	4.8	3.2	5.0	3.4	5.2	3.4	5.5	3.3	5.9	3.3
	73	22.5	4.3	3.1	4.4	3.2	4.7	3.1	4.9	3.3	5.1	3.3	5.4	3.3	5.8	3.3
	77	25.0	4.2	3.0	4.4	3.2	4.7	3.1	4.8	3.3	5.0	3.3	5.3	3.2	5.7	3.2
	82	27.5	4.1	3.0	4.3	3.1	4.6	3.1	4.7	3.2	4.9	3.3	5.2	3.2	5.6	3.2
	86	30.0	4.1	3.0	4.2	3.1	4.5	3.0	4.7	3.2	4.8	3.2	5.1	3.2	5.5	3.2
	91	32.5	4.0	2.9	4.1	3.0	4.4	3.0	4.6	3.2	4.7	3.2	5.0	3.1	5.4	3.1
	95	35.0	3.9	2.9	4.1	3.0	4.3	3.0	4.5	3.2	4.6	3.1	5.0	3.1	5.3	3.1
	100	37.5	3.8	2.8	4.0	3.0	4.3	3.0	4.4	3.1	4.6	3.1	4.9	3.1	5.2	3.0
	104	40.0	3.8	2.8	3.9	2.9	4.2	2.9	4.3	3.1	4.5	3.1	4.8	3.0	5.1	3.0
	110	43.0	3.7	2.8	3.8	2.9	4.1	2.9	4.2	3.0	4.4	3.0	4.7	3.0	5.0	3.0
63 (7.1)	68	20.0	6.9	4.9	7.1	5.0	7.6	5.0	7.9	5.3	8.2	5.3	8.7	5.2	9.3	5.1
	73	22.5	6.7	4.8	7.0	4.9	7.5	4.9	7.8	5.2	8.0	5.2	8.6	5.1	9.1	5.1
	77	25.0	6.7	4.8	6.9	4.9	7.4	4.9	7.6	5.1	7.9	5.1	8.4	5.1	8.9	5.0
	82	27.5	6.5	4.7	6.7	4.8	7.2	4.8	7.5	5.1	7.7	5.0	8.3	5.0	8.8	4.9
	86	30.0	6.4	4.6	6.6	4.7	7.1	4.7	7.3	5.0	7.6	5.0	8.1	4.9	8.7	4.9
	91	32.5	6.3	4.6	6.5	4.7	7.0	4.7	7.2	4.9	7.5	4.9	8.0	4.9	8.5	4.8
	95	35.0	6.2	4.5	6.4	4.6	6.8	4.6	7.1	4.9	7.3	4.9	7.8	4.8	8.3	4.8
	100	37.5	6.1	4.5	6.3	4.6	6.7	4.5	7.0	4.8	7.2	4.8	7.7	4.8	8.2	4.7
	104	40.0	6.0	4.4	6.1	4.5	6.6	4.5	6.8	4.8	7.1	4.8	7.5	4.7	8.0	4.6
	110	43.0	5.8	4.3	6.0	4.4	6.4	4.4	6.6	4.7	6.9	4.7	7.3	4.6	7.8	4.6
100 (11.2)	68	20.0	10.8	7.5	11.2	7.7	12.0	7.7	12.5	8.2	12.9	8.1	13.8	8.1	14.6	7.9
	73	22.5	10.6	7.4	11.0	7.6	11.8	7.6	12.2	8.0	12.7	8.0	13.6	8.0	14.3	7.8
	77	25.0	10.5	7.4	10.9	7.6	11.6	7.5	12.0	7.9	12.4	7.9	13.2	7.8	14.1	7.7
	82	27.5	10.3	7.3	10.6	7.4	11.4	7.4	11.8	7.8	12.2	7.8	13.0	7.7	13.9	7.7
	86	30.0	10.1	7.2	10.5	7.4	11.2	7.3	11.6	7.7	12.0	7.7	12.8	7.6	13.7	7.6
	91	32.5	9.9	7.0	10.2	7.2	11.0	7.2	11.4	7.6	11.8	7.6	12.5	7.5	13.4	7.5
	95	35.0	9.7	6.9	10.1	7.2	10.8	7.1	11.2	7.5	11.5	7.5	12.3	7.4	13.1	7.3
	100	37.5	9.6	6.9	10.0	7.1	10.6	7.0	11.0	7.5	11.4	7.4	12.1	7.4	12.9	7.3
	104	40.0	9.4	6.8	9.6	6.9	10.4	7.0	10.8	7.4	11.1	7.3	11.9	7.3	12.6	7.2
	110	43.0	9.2	6.7	9.4	6.8	10.1	6.8	10.5	7.2	10.9	7.2	11.6	7.1	12.3	7.0
125 (14.0)	68	20.0	13.5	9.4	14.0	9.6	15.1	9.7	15.6	10.1	16.1	10.1	17.2	10.0	18.3	9.9
	73	22.5	13.3	9.3	13.8	9.5	14.8	9.5	15.3	10.0	15.8	10.0	16.9	9.9	17.9	9.7
	77	25.0	13.2	9.2	13.6	9.4	14.6	9.4	15.1	9.9	15.5	9.8	16.5	9.7	17.6	9.6
	82	27.5	12.9	9.0	13.3	9.3	14.3	9.3	14.8	9.8	15.3	9.7	16.3	9.6	17.4	9.5
	86	30.0	12.6	8.9	13.1	9.2	14.0	9.1	14.5	9.6	15.0	9.6	16.0	9.5	17.1	9.4
	91	32.5	12.4	8.8	12.8	9.0	13.7	9.0	14.2	9.5	14.7	9.5	15.7	9.4	16.7	9.2
	95	35.0	12.2	8.7	12.6	8.9	13.4	8.8	14.0	9.4	14.4	9.3	15.4	9.2	16.4	9.1
	100	37.5	12.0	8.6	12.5	8.9	13.2	8.7	13.7	9.2	14.2	9.2	15.1	9.1	16.1	9.0
	104	40.0	11.8	8.5	12.0	8.6	13.0	8.6	13.4	9.1	13.9	9.1	14.8	9.0	15.8	8.9
	110	43.0	11.5	8.3	11.8	8.5	12.6	8.5	13.1	9.0	13.6	9.0	14.5	8.9	15.4	8.7

kcal/h = kW x 860, Btu/h = kW x 3,412

G5. Cooling capacity with PUHY-P850-1250YSHM/PUHY-EP850-900YSHM

PCFY-P-VKM-E

CA : Capacity(kW) SHC : Sensible Heat Capacity(kW)

Model size (Rated kW)	Outdoor air temp.		Indoor air temp.													
			71 ˚FDB / 59˚FWB		73˚FDB / 61˚FWB		77˚FDB / 64˚FWB		81˚FDB / 66˚FWB		82˚FDB / 68˚FWB		86˚FDB / 72˚FWB		90˚FDB / 75˚FWB	
			21.5˚CDB / 15˚CWB		23˚CDB / 16˚CWB		25˚CDB / 18˚CWB		27˚CDB / 19˚CWB		28˚CDB / 20˚CWB		30˚CDB / 22˚CWB		32˚CDB / 24˚CWB	
	˚FDB	˚CDB	CA	SHC	CA	SHC	CA	SHC	CA	SHC	CA	SHC	CA	SHC	CA	SHC
40 (4.5)	68	20.0	4.3	3.1	4.4	3.1	4.7	3.1	4.8	3.3	5.0	3.3	5.3	3.3	5.6	3.2
	73	22.5	4.2	3.0	4.3	3.1	4.6	3.1	4.8	3.3	4.9	3.3	5.3	3.2	5.6	3.2
	77	25.0	4.2	3.0	4.3	3.1	4.6	3.1	4.7	3.3	4.9	3.2	5.2	3.2	5.5	3.2
	82	27.5	4.1	3.0	4.2	3.1	4.5	3.1	4.7	3.2	4.8	3.2	5.2	3.2	5.5	3.2
	86	30.0	4.1	3.0	4.2	3.0	4.5	3.0	4.6	3.2	4.8	3.2	5.1	3.2	5.4	3.1
	91	32.5	4.0	3.0	4.1	3.0	4.4	3.0	4.6	3.2	4.7	3.2	5.1	3.2	5.4	3.1
	95	35.0	4.0	2.9	4.1	3.0	4.4	3.0	4.5	3.2	4.7	3.2	5.0	3.1	5.3	3.1
	100	37.5	3.9	2.9	4.0	3.0	4.3	3.0	4.5	3.1	4.6	3.1	5.0	3.1	5.3	3.1
	104	40.0	3.9	2.9	4.0	2.9	4.3	2.9	4.4	3.1	4.6	3.1	4.9	3.1	5.2	3.1
	110	43.0	3.8	2.9	3.9	2.9	4.2	2.9	4.4	3.1	4.5	3.1	4.9	3.1	5.2	3.0
63 (7.1)	68	20.0	6.7	4.8	6.9	4.9	7.4	4.9	7.6	5.1	7.9	5.1	8.4	5.1	8.9	5.0
	73	22.5	6.6	4.7	6.8	4.8	7.3	4.8	7.5	5.1	7.8	5.1	8.3	5.0	8.8	4.9
	77	25.0	6.6	4.7	6.7	4.8	7.2	4.8	7.5	5.1	7.7	5.0	8.2	5.0	8.7	4.9
	82	27.5	6.5	4.7	6.7	4.8	7.1	4.7	7.4	5.0	7.6	5.0	8.2	5.0	8.7	4.9
	86	30.0	6.4	4.6	6.6	4.7	7.1	4.7	7.3	5.0	7.5	5.0	8.1	4.9	8.6	4.8
	91	32.5	6.4	4.6	6.5	4.7	7.0	4.7	7.2	4.9	7.5	4.9	8.0	4.9	8.5	4.8
	95	35.0	6.3	4.6	6.4	4.6	6.9	4.6	7.1	4.9	7.4	4.9	7.9	4.9	8.4	4.8
	100	37.5	6.2	4.5	6.3	4.6	6.8	4.6	7.0	4.9	7.3	4.9	7.8	4.8	8.4	4.8
	104	40.0	6.1	4.5	6.2	4.6	6.7	4.6	7.0	4.8	7.2	4.8	7.8	4.8	8.3	4.7
	110	43.0	6.1	4.4	6.2	4.5	6.6	4.5	6.9	4.8	7.2	4.8	7.7	4.8	8.2	4.7
100 (11.2)	68	20.0	10.6	7.4	10.9	7.6	11.6	7.6	12.0	7.9	12.4	7.9	13.2	7.8	14.0	7.7
	73	22.5	10.5	7.3	10.8	7.5	11.5	7.5	11.9	7.9	12.3	7.8	13.1	7.8	13.9	7.7
	77	25.0	10.4	7.3	10.6	7.4	11.4	7.4	11.8	7.8	12.2	7.8	13.0	7.7	13.8	7.6
	82	27.5	10.2	7.2	10.5	7.4	11.2	7.3	11.6	7.8	12.0	7.7	12.9	7.7	13.7	7.6
	86	30.0	10.1	7.2	10.4	7.3	11.1	7.3	11.5	7.7	11.9	7.7	12.7	7.6	13.5	7.5
	91	32.5	10.0	7.1	10.2	7.2	11.0	7.2	11.4	7.6	11.8	7.6	12.6	7.6	13.4	7.5
	95	35.0	9.9	7.1	10.1	7.2	10.9	7.2	11.2	7.6	11.7	7.6	12.5	7.5	13.3	7.4
	100	37.5	9.8	7.0	10.0	7.1	10.7	7.1	11.1	7.5	11.6	7.5	12.4	7.5	13.2	7.4
	104	40.0	9.7	6.9	9.9	7.1	10.6	7.0	11.0	7.4	11.4	7.5	12.2	7.4	13.0	7.3
	110	43.0	9.6	6.9	9.7	7.0	10.4	7.0	10.8	7.4	11.3	7.4	12.1	7.3	12.9	7.3
125 (14.0)	68	20.0	13.2	9.2	13.6	9.4	14.6	9.4	15.0	9.9	15.5	9.8	16.5	9.7	17.5	9.6
	73	22.5	13.1	9.1	13.4	9.3	14.4	9.3	14.9	9.8	15.4	9.8	16.4	9.7	17.4	9.5
	77	25.0	13.0	9.1	13.3	9.2	14.3	9.2	14.7	9.7	15.2	9.7	16.2	9.6	17.2	9.5
	82	27.5	12.8	9.0	13.1	9.2	14.0	9.1	14.6	9.6	15.1	9.6	16.1	9.5	17.1	9.4
	86	30.0	12.7	8.9	13.0	9.1	13.9	9.1	14.4	9.6	14.9	9.5	15.9	9.5	16.9	9.3
	91	32.5	12.5	8.8	12.8	9.0	13.7	9.0	14.2	9.5	14.7	9.5	15.8	9.4	16.8	9.3
	95	35.0	12.4	8.8	12.6	8.9	13.6	8.9	14.0	9.4	14.6	9.4	15.7	9.3	16.6	9.2
	100	37.5	12.3	8.7	12.5	8.8	13.4	8.8	13.9	9.3	14.4	9.3	15.5	9.3	16.5	9.2
	104	40.0	12.1	8.6	12.3	8.8	13.2	8.8	13.7	9.2	14.3	9.3	15.3	9.2	16.3	9.1
	110	43.0	12.0	8.5	12.2	8.7	13.1	8.7	13.6	9.2	14.1	9.2	15.1	9.1	16.1	9.0

kcal/h = kW x 860, Btu/h = kW x 3,412

CT

G6. Cooling capacity with PUHY-HP200-500Y(S)HM

PCFY-P-VKM-E

CA : Capacity(kW) SHC : Sensible Heat Capacity(kW)

Model size (Rated kW)	Outdoor air temp.		Indoor air temp.													
			71 ˚FDB / 59˚FWB		73˚FDB / 61˚FWB		77˚FDB / 64˚FWB		81˚FDB / 66˚FWB		82˚FDB / 68˚FWB		86˚FDB / 72˚FWB		90˚FDB / 75˚FWB	
			21.5˚CDB / 15˚CWB		23˚CDB / 16˚CWB		25˚CDB / 18˚CWB		27˚CDB / 19˚CWB		28˚CDB / 20˚CWB		30˚CDB / 22˚CWB		32˚CDB / 24˚CWB	
	˚FDB	˚CDB	CA	SHC	CA	SHC	CA	SHC	CA	SHC	CA	SHC	CA	SHC	CA	SHC
40 (4.5)	68	20.0	4.0	2.9	4.3	3.1	4.5	3.1	4.8	3.3	5.0	3.3	5.3	3.3	5.6	3.2
	73	22.5	4.0	2.9	4.3	3.1	4.5	3.1	4.8	3.3	5.0	3.3	5.3	3.3	5.6	3.2
	77	25.0	4.0	2.9	4.3	3.1	4.5	3.1	4.8	3.3	5.0	3.3	5.3	3.2	5.5	3.2
	82	27.5	4.0	2.9	4.2	3.1	4.5	3.0	4.7	3.3	4.9	3.2	5.1	3.2	5.4	3.1
	86	30.0	3.9	2.9	4.2	3.0	4.4	3.0	4.7	3.2	4.8	3.2	5.1	3.2	5.3	3.1
	91	32.5	3.9	2.9	4.1	3.0	4.4	3.0	4.6	3.2	4.7	3.2	5.0	3.1	5.2	3.0
	95	35.0	3.9	2.9	4.1	3.0	4.3	3.0	4.5	3.2	4.6	3.1	4.9	3.1	5.1	3.0
	100	37.5	3.9	2.9	4.0	3.0	4.2	2.9	4.4	3.1	4.5	3.1	4.8	3.0	5.0	3.0
	104	40.0	3.8	2.9	4.0	3.0	4.2	2.9	4.4	3.1	4.5	3.1	4.7	3.0	4.9	2.9
	110	43.0	3.8	2.8	3.9	2.9	4.1	2.9	4.3	3.0	4.4	3.0	4.5	3.0	4.7	2.9
63 (7.1)	68	20.0	6.3	4.5	6.7	4.8	7.2	4.8	7.6	5.1	7.9	5.1	8.4	5.0	8.8	5.0
	73	22.5	6.3	4.5	6.7	4.8	7.2	4.8	7.6	5.1	7.9	5.1	8.4	5.0	8.8	5.0
	77	25.0	6.3	4.5	6.7	4.8	7.2	4.8	7.6	5.1	7.8	5.1	8.3	5.0	8.7	4.9
	82	27.5	6.2	4.5	6.7	4.8	7.1	4.7	7.5	5.1	7.7	5.0	8.1	4.9	8.5	4.8
	86	30.0	6.2	4.5	6.6	4.7	7.0	4.7	7.4	5.0	7.6	5.0	8.0	4.9	8.4	4.8
	91	32.5	6.2	4.5	6.5	4.7	6.9	4.6	7.2	4.9	7.4	4.9	7.8	4.8	8.2	4.7
	95	35.0	6.1	4.5	6.4	4.7	6.8	4.6	7.1	4.9	7.3	4.9	7.7	4.8	8.0	4.7
	100	37.5	6.1	4.5	6.4	4.6	6.7	4.5	7.0	4.8	7.2	4.8	7.5	4.7	7.8	4.6
	104	40.0	6.1	4.4	6.3	4.6	6.6	4.5	6.9	4.8	7.1	4.8	7.4	4.6	7.7	4.5
	110	43.0	6.0	4.4	6.2	4.5	6.5	4.4	6.7	4.7	6.9	4.7	7.2	4.6	7.5	4.4
100 (11.2)	68	20.0	9.9	7.0	10.6	7.4	11.3	7.4	12.0	7.9	12.5	7.9	13.2	7.8	13.9	7.7
	73	22.5	9.9	7.0	10.6	7.4	11.3	7.4	12.0	7.9	12.5	7.9	13.2	7.8	13.9	7.7
	77	25.0	9.9	7.0	10.6	7.4	11.3	7.4	12.0	7.9	12.4	7.9	13.1	7.8	13.7	7.6
	82	27.5	9.8	7.0	10.5	7.4	11.2	7.3	11.8	7.8	12.2	7.8	12.8	7.6	13.4	7.5
	86	30.0	9.8	7.0	10.4	7.3	11.0	7.3	11.6	7.7	12.0	7.7	12.6	7.6	13.2	7.4
	91	32.5	9.7	7.0	10.3	7.3	10.9	7.2	11.4	7.6	11.7	7.6	12.3	7.4	12.9	7.3
	95	35.0	9.7	6.9	10.2	7.2	10.7	7.1	11.2	7.6	11.6	7.5	12.1	7.4	12.7	7.2
	100	37.5	9.6	6.9	10.0	7.1	10.6	7.0	11.0	7.5	11.3	7.4	11.8	7.2	12.4	7.1
	104	40.0	9.6	6.9	9.9	7.1	10.4	7.0	10.8	7.4	11.1	7.3	11.6	7.2	12.1	7.0
	110	43.0	9.5	6.8	9.8	7.0	10.2	6.9	10.6	7.3	10.9	7.2	11.3	7.0	11.8	6.8
125 (14.0)	68	20.0	12.3	8.7	13.3	9.2	14.1	9.2	15.0	9.8	15.6	9.9	16.5	9.7	17.4	9.5
	73	22.5	12.3	8.7	13.3	9.2	14.1	9.2	15.0	9.8	15.6	9.9	16.5	9.7	17.4	9.5
	77	25.0	12.3	8.7	13.3	9.2	14.1	9.2	15.0	9.8	15.5	9.8	16.3	9.6	17.2	9.4
	82	27.5	12.3	8.7	13.2	9.2	14.0	9.1	14.7	9.7	15.2	9.7	16.0	9.5	16.8	9.3
	86	30.0	12.2	8.7	13.0	9.1	13.8	9.0	14.5	9.6	15.0	9.6	15.7	9.4	16.5	9.2
	91	32.5	12.2	8.6	12.8	9.0	13.6	8.9	14.2	9.5	14.7	9.4	15.4	9.2	16.1	9.0
	95	35.0	12.1	8.6	12.7	9.0	13.4	8.8	14.0	9.4	14.4	9.3	15.1	9.1	15.8	8.9
	100	37.5	12.0	8.6	12.5	8.9	13.2	8.7	13.8	9.3	14.2	9.2	14.8	9.0	15.5	8.8
	104	40.0	12.0	8.5	12.4	8.8	13.0	8.7	13.6	9.2	13.9	9.1	14.5	8.9	15.2	8.7
	110	43.0	11.9	8.5	12.2	8.7	12.8	8.5	13.3	9.0	13.6	9.0	14.2	8.7	14.7	8.5

kcal/h = kW x 860, Btu/h = kW x 3,412

G7. Cooling capacity with PQHY-P200-900Y(S)HM PQRY-P200-600Y(S)HM

PCFY-P-VKM-E

CA : Capacity(kW) SHC : Sensible Heat Capacity(kW)

Model size (Rated kW)	Water temp.		Indoor air temp.													
			71 ˚FDB / 59˚FWB		73˚FDB / 61˚FWB		77˚FDB / 64˚FWB		81˚FDB / 66˚FWB		82˚FDB / 68˚FWB		86˚FDB / 72˚FWB		90˚FDB / 75˚FWB	
			21.5˚CDB / 15˚CWB		23˚CDB / 16˚CWB		25˚CDB / 18˚CWB		27˚CDB / 19˚CWB		28˚CDB / 20˚CWB		30˚CDB / 22˚CWB		32˚CDB / 24˚CWB	
	˚F	˚C	CA	SHC	CA	SHC	CA	SHC	CA	SHC	CA	SHC	CA	SHC	CA	SHC
40 (4.5)	50	10.0	4.1	3.0	4.2	3.0	4.4	3.0	4.5	3.2	4.5	3.1	4.5	2.9	4.5	2.8
	68	20.0	4.1	3.0	4.2	3.0	4.4	3.0	4.5	3.2	4.5	3.1	4.5	2.9	4.5	2.8
	86	30.0	4.1	3.0	4.2	3.0	4.4	3.0	4.5	3.2	4.5	3.1	4.5	2.9	4.5	2.8
	104	40.0	3.6	2.7	3.7	2.8	3.9	2.8	4.0	2.9	4.0	2.9	4.0	2.7	4.0	2.6
	113	45.0	3.4	2.6	3.5	2.7	3.7	2.7	3.8	2.8	3.8	2.8	3.8	2.7	3.8	2.5
63 (7.1)	50	10.0	6.4	4.6	6.6	4.7	6.9	4.7	7.1	4.9	7.1	4.8	7.1	4.5	7.1	4.3
	68	20.0	6.4	4.6	6.6	4.7	6.9	4.7	7.1	4.9	7.1	4.8	7.1	4.5	7.1	4.3
	86	30.0	6.4	4.6	6.6	4.7	6.9	4.7	7.1	4.9	7.1	4.8	7.1	4.5	7.1	4.3
	104	40.0	5.7	4.2	5.8	4.4	6.2	4.3	6.3	4.5	6.3	4.4	6.3	4.2	6.3	4.0
	113	45.0	5.3	4.1	5.5	4.2	5.8	4.1	5.9	4.4	5.9	4.3	5.9	4.1	5.9	3.9
100 (11.2)	50	10.0	10.1	7.1	10.4	7.3	10.9	7.2	11.2	7.5	11.2	7.4	11.2	7.0	11.2	6.6
	68	20.0	10.1	7.1	10.4	7.3	10.9	7.2	11.2	7.5	11.2	7.4	11.2	7.0	11.2	6.6
	86	30.0	10.1	7.1	10.4	7.3	10.9	7.2	11.2	7.5	11.2	7.4	11.2	7.0	11.2	6.6
	104	40.0	9.0	6.6	9.2	6.7	9.7	6.6	10.0	7.0	10.0	6.8	10.0	6.5	10.0	6.2
	113	45.0	8.4	6.3	8.7	6.5	9.1	6.4	9.4	6.7	9.4	6.6	9.4	6.3	9.4	6.0
125 (14.0)	50	10.0	12.6	8.9	13.0	9.1	13.7	8.9	14.0	9.4	14.0	9.1	14.0	8.7	14.0	8.2
	68	20.0	12.6	8.9	13.0	9.1	13.7	8.9	14.0	9.4	14.0	9.1	14.0	8.7	14.0	8.2
	86	30.0	12.6	8.9	13.0	9.1	13.7	8.9	14.0	9.4	14.0	9.1	14.0	8.7	14.0	8.2
	104	40.0	11.2	8.2	11.5	8.4	12.1	8.2	12.5	8.7	12.5	8.5	12.5	8.1	12.5	7.7
	113	45.0	10.5	7.8	10.8	8.0	11.4	7.9	11.7	8.3	11.7	8.1	11.7	7.8	11.7	7.4

kcal/h = kW x 860, Btu/h = kW x 3,412

CT

G8. Cooling capacity with PUMY-P100,125,140YHMB,VHMB

PCFY-P-VKM-E

CA : Capacity(kW) SHC : Sensible Heat Capacity(kW)

Model size (Rated kW)	Outdoor air temp.		Indoor air temp.													
			71 ˚FDB / 59˚FWB		73˚FDB / 61˚FWB		77˚FDB / 64˚FWB		81˚FDB / 66˚FWB		82˚FDB / 68˚FWB		86˚FDB / 72˚FWB		90˚FDB / 75˚FWB	
			21.5˚CDB / 15˚CWB		23˚CDB / 16˚CWB		25˚CDB / 18˚CWB		27˚CDB / 19˚CWB		28˚CDB / 20˚CWB		30˚CDB / 22˚CWB		32˚CDB / 24˚CWB	
	˚FDB	˚CDB	CA	SHC	CA	SHC	CA	SHC	CA	SHC	CA	SHC	CA	SHC	CA	SHC
40 (4.5)	68	20.0	4.2	3.1	4.4	3.2	4.7	3.1	4.8	3.3	5.0	3.3	5.3	3.2	5.5	3.2
	73	22.5	4.2	3.0	4.4	3.2	4.6	3.1	4.8	3.3	4.9	3.3	5.2	3.2	5.5	3.1
	77	25.0	4.1	3.0	4.3	3.1	4.6	3.1	4.7	3.3	4.9	3.2	5.2	3.2	5.4	3.1
	82	27.5	4.1	3.0	4.3	3.1	4.5	3.1	4.7	3.2	4.8	3.2	5.1	3.2	5.4	3.1
	86	30.0	4.0	3.0	4.2	3.1	4.5	3.0	4.6	3.2	4.8	3.2	5.1	3.2	5.3	3.1
	91	32.5	4.0	2.9	4.2	3.0	4.4	3.0	4.6	3.2	4.7	3.2	5.0	3.1	5.3	3.1
	95	35.0	3.9	2.9	4.1	3.0	4.4	3.0	4.5	3.2	4.6	3.1	4.9	3.1	5.2	3.0
	100	37.5	3.8	2.9	4.0	3.0	4.3	3.0	4.5	3.1	4.6	3.1	4.9	3.1	5.1	3.0
	104	40.0	3.8	2.8	4.0	2.9	4.3	2.9	4.4	3.1	4.5	3.1	4.8	3.1	5.1	3.0
	110	43.0	3.7	2.8	3.9	2.9	4.2	2.9	4.3	3.1	4.4	3.0	4.8	3.0	5.0	3.0
63 (7.1)	68	20.0	6.7	4.8	7.0	4.9	7.4	4.9	7.6	5.1	7.9	5.1	8.3	5.0	8.7	4.9
	73	22.5	6.6	4.7	6.9	4.9	7.3	4.8	7.6	5.1	7.8	5.1	8.2	5.0	8.6	4.9
	77	25.0	6.5	4.7	6.9	4.9	7.2	4.8	7.5	5.1	7.7	5.0	8.2	5.0	8.5	4.8
	82	27.5	6.5	4.6	6.8	4.8	7.2	4.8	7.4	5.0	7.6	5.0	8.1	4.9	8.5	4.8
	86	30.0	6.4	4.6	6.7	4.8	7.1	4.7	7.3	5.0	7.5	5.0	8.0	4.9	8.4	4.8
	91	32.5	6.3	4.5	6.6	4.7	7.0	4.7	7.2	4.9	7.4	4.9	7.9	4.9	8.3	4.7
	95	35.0	6.2	4.5	6.5	4.7	6.9	4.7	7.1	4.9	7.3	4.9	7.8	4.8	8.2	4.7
	100	37.5	6.1	4.4	6.4	4.6	6.8	4.6	7.0	4.9	7.2	4.8	7.7	4.8	8.1	4.7
	104	40.0	5.9	4.4	6.3	4.6	6.8	4.6	6.9	4.8	7.1	4.8	7.6	4.7	8.0	4.6
	110	43.0	5.8	4.3	6.1	4.5	6.6	4.5	6.8	4.8	6.9	4.7	7.5	4.7	7.9	4.6
100 (11.2)	68	20.0	10.5	7.4	11.1	7.7	11.7	7.6	12.0	7.9	12.4	7.9	13.1	7.8	13.7	7.6
	73	22.5	10.4	7.3	10.9	7.6	11.6	7.5	11.9	7.9	12.3	7.8	13.0	7.7	13.6	7.5
	77	25.0	10.3	7.3	10.8	7.5	11.4	7.4	11.8	7.8	12.2	7.8	12.9	7.7	13.5	7.5
	82	27.5	10.2	7.2	10.7	7.5	11.3	7.4	11.7	7.8	12.0	7.7	12.7	7.6	13.4	7.4
	86	30.0	10.0	7.1	10.5	7.4	11.2	7.3	11.5	7.7	11.9	7.7	12.6	7.6	13.2	7.4
	91	32.5	9.9	7.0	10.4	7.3	11.1	7.3	11.4	7.6	11.7	7.6	12.5	7.5	13.1	7.3
	95	35.0	9.7	7.0	10.2	7.2	10.9	7.2	11.2	7.5	11.5	7.5	12.3	7.4	12.9	7.3
	100	37.5	9.5	6.9	10.1	7.2	10.8	7.1	11.1	7.5	11.4	7.4	12.2	7.4	12.8	7.2
	104	40.0	9.4	6.8	9.9	7.1	10.7	7.1	10.9	7.4	11.2	7.4	12.0	7.3	12.6	7.2
	110	43.0	9.1	6.6	9.7	7.0	10.5	7.0	10.7	7.3	11.0	7.3	11.8	7.2	12.4	7.1
125 (14.0)	68	20.0	13.2	9.2	13.8	9.5	14.6	9.4	15.1	9.9	15.5	9.8	16.4	9.7	17.2	9.4
	73	22.5	13.0	9.1	13.7	9.5	14.4	9.3	14.9	9.8	15.4	9.7	16.2	9.6	17.0	9.4
	77	25.0	12.9	9.0	13.5	9.4	14.3	9.3	14.7	9.7	15.2	9.7	16.1	9.5	16.9	9.3
	82	27.5	12.7	8.9	13.4	9.3	14.1	9.2	14.6	9.6	15.0	9.6	15.9	9.5	16.7	9.2
	86	30.0	12.5	8.8	13.2	9.2	14.0	9.1	14.4	9.6	14.8	9.5	15.8	9.4	16.5	9.2
	91	32.5	12.4	8.8	13.0	9.1	13.8	9.0	14.2	9.5	14.6	9.4	15.6	9.3	16.3	9.1
	95	35.0	12.2	8.6	12.8	9.0	13.7	9.0	14.0	9.4	14.4	9.3	15.4	9.2	16.2	9.0
	100	37.5	11.9	8.5	12.6	8.9	13.5	8.9	13.8	9.3	14.2	9.2	15.2	9.2	16.0	9.0
	104	40.0	11.7	8.4	12.4	8.8	13.3	8.8	13.7	9.2	14.0	9.1	15.0	9.1	15.8	8.9
	110	43.0	11.4	8.3	12.1	8.6	13.1	8.7	13.4	9.1	13.7	9.0	14.8	9.0	15.6	8.8

kcal/h = kW x 860, Btu/h = kW x 3,412

H1. Cooling capacity with PUHY-P200, 250YHM/PUHY-EP200, 250YHM PURY-P200, 250YHM/PURY-EP200, 250YHM

PKFY-P-VBM-E,VHM-E,VKM-E

CA : Capacity(kW) SHC : Sensible Heat Capacity(kW)

Model size (Rated kW)	Outdoor air temp.		Indoor air temp.													
			71 ˚FDB / 59˚FWB		73˚FDB / 61˚FWB		77˚FDB / 64˚FWB		81˚FDB / 66˚FWB		82˚FDB / 68˚FWB		86˚FDB / 72˚FWB		90˚FDB / 75˚FWB	
			21.5˚CDB / 15˚CWB		23˚CDB / 16˚CWB		25˚CDB / 18˚CWB		27˚CDB / 19˚CWB		28˚CDB / 20˚CWB		30˚CDB / 22˚CWB		32˚CDB / 24˚CWB	
	˚FDB	˚CDB	CA	SHC	CA	SHC	CA	SHC	CA	SHC	CA	SHC	CA	SHC	CA	SHC
15 (1.7)	68	20.0	1.6	1.2	1.7	1.2	1.8	1.2	1.8	1.3	1.9	1.2	2.0	1.2	2.1	1.2
	73	22.5	1.6	1.2	1.7	1.2	1.8	1.2	1.8	1.3	1.9	1.2	2.0	1.2	2.1	1.2
	77	25.0	1.6	1.2	1.7	1.2	1.8	1.2	1.8	1.3	1.9	1.2	2.0	1.2	2.1	1.2
	82	27.5	1.6	1.2	1.7	1.2	1.8	1.2	1.8	1.2	1.8	1.2	1.9	1.2	2.1	1.2
	86	30.0	1.6	1.1	1.6	1.2	1.7	1.2	1.8	1.2	1.8	1.2	1.9	1.2	2.0	1.2
	91	32.5	1.6	1.1	1.6	1.2	1.7	1.1	1.7	1.2	1.8	1.2	1.9	1.2	2.0	1.2
	95	35.0	1.5	1.1	1.6	1.1	1.7	1.1	1.7	1.2	1.8	1.2	1.8	1.2	2.0	1.1
	100	37.5	1.5	1.1	1.5	1.1	1.6	1.1	1.7	1.2	1.7	1.2	1.8	1.2	1.9	1.1
	104	40.0	1.5	1.1	1.5	1.1	1.6	1.1	1.6	1.2	1.7	1.2	1.8	1.1	1.9	1.1
	110	43.0	1.4	1.1	1.5	1.1	1.6	1.1	1.6	1.1	1.6	1.1	1.7	1.1	1.8	1.1
20 (2.2)	68	20.0	2.1	1.5	2.2	1.6	2.3	1.5	2.4	1.6	2.5	1.6	2.6	1.6	2.8	1.6
	73	22.5	2.1	1.5	2.2	1.6	2.3	1.5	2.4	1.6	2.5	1.6	2.6	1.6	2.8	1.6
	77	25.0	2.1	1.5	2.2	1.6	2.3	1.5	2.4	1.6	2.4	1.6	2.6	1.6	2.7	1.5
	82	27.5	2.1	1.5	2.1	1.5	2.3	1.5	2.3	1.6	2.4	1.6	2.5	1.5	2.7	1.5
	86	30.0	2.0	1.4	2.1	1.5	2.2	1.5	2.3	1.6	2.3	1.5	2.5	1.5	2.6	1.5
	91	32.5	2.0	1.4	2.1	1.5	2.2	1.5	2.2	1.5	2.3	1.5	2.4	1.5	2.6	1.5
	95	35.0	2.0	1.4	2.0	1.4	2.1	1.4	2.2	1.5	2.3	1.5	2.4	1.5	2.5	1.5
	100	37.5	1.9	1.4	2.0	1.4	2.1	1.4	2.1	1.5	2.2	1.5	2.3	1.5	2.5	1.5
	104	40.0	1.9	1.4	1.9	1.4	2.1	1.4	2.1	1.5	2.2	1.5	2.3	1.5	2.4	1.4
	110	43.0	1.8	1.3	1.9	1.4	2.0	1.4	2.0	1.4	2.1	1.4	2.2	1.4	2.4	1.4
25 (2.8)	68	20.0	2.7	1.9	2.8	1.9	2.9	1.9	3.0	2.0	3.1	2.0	3.3	2.0	3.5	1.9
	73	22.5	2.7	1.9	2.8	1.9	2.9	1.9	3.0	2.0	3.1	2.0	3.3	2.0	3.5	1.9
	77	25.0	2.7	1.9	2.8	1.9	2.9	1.9	3.0	2.0	3.1	2.0	3.3	2.0	3.5	1.9
	82	27.5	2.6	1.8	2.7	1.9	2.9	1.9	3.0	2.0	3.1	2.0	3.2	1.9	3.4	1.9
	86	30.0	2.6	1.8	2.7	1.9	2.8	1.8	2.9	2.0	3.0	1.9	3.1	1.9	3.3	1.9
	91	32.5	2.5	1.8	2.6	1.8	2.8	1.8	2.8	1.9	2.9	1.9	3.1	1.9	3.3	1.9
	95	35.0	2.5	1.8	2.6	1.8	2.7	1.8	2.8	1.9	2.9	1.9	3.0	1.8	3.2	1.8
	100	37.5	2.5	1.8	2.5	1.8	2.7	1.8	2.7	1.9	2.8	1.9	3.0	1.8	3.1	1.8
	104	40.0	2.4	1.7	2.5	1.8	2.6	1.8	2.7	1.9	2.8	1.9	2.9	1.8	3.1	1.8
	110	43.0	2.4	1.7	2.4	1.7	2.6	1.8	2.6	1.8	2.7	1.8	2.8	1.8	3.0	1.7
32 (3.6)	68	20.0	3.4	2.6	3.5	2.7	3.8	2.7	3.9	2.9	4.0	2.8	4.2	2.8	4.6	2.8
	73	22.5	3.4	2.6	3.5	2.7	3.8	2.7	3.9	2.9	4.0	2.8	4.2	2.8	4.6	2.8
	77	25.0	3.4	2.6	3.5	2.7	3.8	2.7	3.9	2.9	4.0	2.8	4.2	2.8	4.5	2.7
	82	27.5	3.4	2.6	3.5	2.7	3.7	2.7	3.8	2.8	3.9	2.8	4.1	2.7	4.4	2.7
	86	30.0	3.3	2.6	3.4	2.6	3.6	2.6	3.7	2.8	3.8	2.7	4.0	2.7	4.3	2.7
	91	32.5	3.3	2.6	3.4	2.6	3.6	2.6	3.7	2.8	3.8	2.7	4.0	2.7	4.2	2.6
	95	35.0	3.2	2.5	3.3	2.6	3.5	2.6	3.6	2.7	3.7	2.7	3.9	2.7	4.1	2.6
	100	37.5	3.2	2.5	3.2	2.5	3.4	2.5	3.5	2.7	3.6	2.7	3.8	2.6	4.0	2.6
	104	40.0	3.1	2.5	3.2	2.5	3.4	2.5	3.5	2.7	3.6	2.7	3.7	2.6	4.0	2.6
	110	43.0	3.0	2.4	3.1	2.5	3.3	2.5	3.3	2.6	3.5	2.6	3.6	2.6	3.9	2.5
40 (4.5)	68	20.0	4.3	3.2	4.4	3.3	4.7	3.3	4.9	3.5	5.0	3.4	5.3	3.4	5.7	3.4
	73	22.5	4.3	3.2	4.4	3.3	4.7	3.3	4.9	3.5	5.0	3.4	5.3	3.4	5.7	3.4
	77	25.0	4.3	3.2	4.4	3.3	4.7	3.3	4.9	3.5	5.0	3.4	5.3	3.4	5.6	3.3
	82	27.5	4.3	3.2	4.4	3.3	4.6	3.2	4.8	3.4	4.9	3.4	5.2	3.4	5.5	3.3
	86	30.0	4.2	3.2	4.3	3.2	4.6	3.2	4.7	3.4	4.8	3.4	5.0	3.3	5.4	3.3
	91	32.5	4.1	3.1	4.2	3.2	4.5	3.2	4.6	3.4	4.7	3.3	5.0	3.3	5.3	3.2
	95	35.0	4.0	3.1	4.1	3.1	4.4	3.1	4.5	3.3	4.6	3.3	4.9	3.2	5.2	3.2
	100	37.5	3.9	3.0	4.1	3.1	4.3	3.1	4.4	3.3	4.5	3.2	4.8	3.2	5.0	3.1
	104	40.0	3.9	3.0	4.0	3.1	4.2	3.0	4.3	3.2	4.5	3.2	4.7	3.2	5.0	3.1
	110	43.0	3.8	3.0	3.9	3.0	4.1	3.0	4.2	3.2	4.3	3.2	4.5	3.1	4.8	3.1
50 (5.6)	68	20.0	5.3	3.8	5.5	3.9	5.9	3.9	6.0	4.0	6.2	4.0	6.6	4.0	7.1	4.0
	73	22.5	5.3	3.8	5.5	3.9	5.9	3.9	6.0	4.0	6.2	4.0	6.6	4.0	7.1	4.0
	77	25.0	5.3	3.8	5.5	3.9	5.9	3.9	6.0	4.0	6.2	4.0	6.6	4.0	6.9	3.9
	82	27.5	5.3	3.8	5.5	3.9	5.8	3.8	5.9	4.0	6.1	4.0	6.4	3.9	6.8	3.8
	86	30.0	5.2	3.7	5.3	3.8	5.7	3.8	5.8	4.0	6.0	3.9	6.3	3.9	6.7	3.8
	91	32.5	5.1	3.7	5.3	3.8	5.5	3.7	5.7	3.9	5.9	3.9	6.2	3.8	6.6	3.8
	95	35.0	5.0	3.6	5.2	3.7	5.5	3.7	5.6	3.9	5.7	3.8	6.0	3.7	6.4	3.7
	100	37.5	4.9	3.6	5.0	3.6	5.3	3.6	5.5	3.8	5.6	3.8	5.9	3.7	6.3	3.7
	104	40.0	4.8	3.5	5.0	3.6	5.3	3.6	5.4	3.8	5.5	3.7	5.8	3.7	6.2	3.6
	110	43.0	4.7	3.5	4.8	3.5	5.1	3.5	5.2	3.7	5.4	3.7	5.7	3.6	6.0	3.6

kcal/h = kW x 860, Btu/h = kW x 3,412

CT

H1. Cooling capacity with PUHY-P200, 250YHM/PUHY-EP200, 250YHM PURY-P200, 250YHM/PURY-EP200, 250YHM

PKFY-P-VBM-E,VHM-E,VKM-E

CA : Capacity(kW) SHC : Sensible Heat Capacity(kW)

Model size (Rated kW)	Outdoor air temp.		Indoor air temp.													
			71 ˚FDB / 59˚FWB		73˚FDB / 61˚FWB		77˚FDB / 64˚FWB		81˚FDB / 66˚FWB		82˚FDB / 68˚FWB		86˚FDB / 72˚FWB		90˚FDB / 75˚FWB	
			21.5˚CDB / 15˚CWB		23˚CDB / 16˚CWB		25˚CDB / 18˚CWB		27˚CDB / 19˚CWB		28˚CDB / 20˚CWB		30˚CDB / 22˚CWB		32˚CDB / 24˚CWB	
	˚FDB	˚CDB	CA	SHC	CA	SHC	CA	SHC	CA	SHC	CA	SHC	CA	SHC	CA	SHC
63 (7.1)	68	20.0	6.7	5.2	7.0	5.4	7.5	5.4	7.7	5.7	7.9	5.6	8.4	5.6	9.0	5.5
	73	22.5	6.7	5.2	7.0	5.4	7.5	5.4	7.7	5.7	7.9	5.6	8.4	5.6	9.0	5.5
	77	25.0	6.7	5.2	7.0	5.4	7.5	5.4	7.7	5.7	7.8	5.6	8.3	5.5	8.8	5.4
	82	27.5	6.7	5.2	6.9	5.3	7.3	5.3	7.5	5.6	7.7	5.5	8.1	5.4	8.7	5.4
	86	30.0	6.6	5.1	6.8	5.3	7.2	5.2	7.4	5.5	7.6	5.5	8.0	5.4	8.5	5.3
	91	32.5	6.5	5.1	6.7	5.2	7.0	5.1	7.2	5.5	7.4	5.4	7.8	5.3	8.3	5.3
	95	35.0	6.4	5.0	6.5	5.1	6.9	5.1	7.1	5.4	7.3	5.4	7.7	5.3	8.1	5.2
	100	37.5	6.2	4.9	6.4	5.1	6.8	5.1	6.9	5.3	7.1	5.3	7.5	5.2	8.0	5.2
	104	40.0	6.1	4.9	6.3	5.1	6.7	5.0	6.8	5.3	7.0	5.3	7.3	5.2	7.8	5.1
	110	43.0	6.0	4.8	6.1	5.0	6.5	4.9	6.6	5.2	6.8	5.2	7.2	5.1	7.6	5.0
100 (11.2)	68	20.0	10.6	7.6	11.0	7.9	11.8	7.8	12.1	8.2	12.5	8.2	13.2	8.1	14.2	8.0
	73	22.5	10.6	7.6	11.0	7.9	11.8	7.8	12.1	8.2	12.5	8.2	13.2	8.1	14.2	8.0
	77	25.0	10.6	7.6	11.0	7.9	11.8	7.8	12.1	8.2	12.4	8.1	13.1	8.0	13.9	7.9
	82	27.5	10.6	7.6	10.9	7.8	11.5	7.7	11.9	8.1	12.2	8.1	12.8	7.9	13.7	7.8
	86	30.0	10.4	7.5	10.7	7.7	11.3	7.6	11.6	8.0	11.9	7.9	12.5	7.8	13.4	7.7
	91	32.5	10.2	7.4	10.5	7.6	11.1	7.5	11.4	7.9	11.7	7.8	12.3	7.7	13.1	7.6
	95	35.0	10.0	7.3	10.3	7.5	10.9	7.4	11.2	7.8	11.5	7.8	12.1	7.6	12.8	7.5
	100	37.5	9.8	7.2	10.1	7.4	10.7	7.3	10.9	7.7	11.3	7.7	11.9	7.5	12.5	7.4
	104	40.0	9.6	7.1	9.9	7.3	10.5	7.2	10.8	7.6	11.1	7.6	11.6	7.4	12.3	7.3
	110	43.0	9.4	7.0	9.7	7.2	10.2	7.1	10.4	7.5	10.8	7.5	11.3	7.3	12.0	7.2

kcal/h = kW x 860, Btu/h = kW x 3,412

H2. Cooling capacity with PUHY-P300-400YHM /PUHY-EP300, 400Y(S)HM PURY-P300-400YHM /PURY-EP300, 400Y(S)HM

PKFY-P-VBM-E,VHM-E,VKM-E

CA : Capacity(kW) SHC : Sensible Heat Capacity(kW)

Model size (Rated kW)	Outdoor air temp.		Indoor air temp.													
			71 ˚FDB / 59˚FWB		73˚FDB / 61˚FWB		77˚FDB / 64˚FWB		81˚FDB / 66˚FWB		82˚FDB / 68˚FWB		86˚FDB / 72˚FWB		90˚FDB / 75˚FWB	
			21.5˚CDB / 15˚CWB		23˚CDB / 16˚CWB		25˚CDB / 18˚CWB		27˚CDB / 19˚CWB		28˚CDB / 20˚CWB		30˚CDB / 22˚CWB		32˚CDB / 24˚CWB	
	˚FDB	˚CDB	CA	SHC	CA	SHC	CA	SHC	CA	SHC	CA	SHC	CA	SHC	CA	SHC
15 (1.7)	68	20.0	1.6	1.2	1.7	1.2	1.8	1.2	1.9	1.3	2.0	1.3	2.1	1.3	2.2	1.2
	73	22.5	1.6	1.2	1.7	1.2	1.8	1.2	1.9	1.3	1.9	1.3	2.0	1.2	2.2	1.2
	77	25.0	1.6	1.2	1.7	1.2	1.8	1.2	1.8	1.3	1.9	1.2	2.0	1.2	2.1	1.2
	82	27.5	1.6	1.2	1.6	1.2	1.7	1.2	1.8	1.2	1.9	1.2	2.0	1.2	2.1	1.2
	86	30.0	1.6	1.1	1.6	1.2	1.7	1.2	1.8	1.2	1.8	1.2	1.9	1.2	2.0	1.2
	91	32.5	1.5	1.1	1.6	1.1	1.7	1.1	1.7	1.2	1.8	1.2	1.9	1.2	2.0	1.2
	95	35.0	1.5	1.1	1.5	1.1	1.6	1.1	1.7	1.2	1.7	1.2	1.9	1.2	2.0	1.2
	100	37.5	1.5	1.1	1.5	1.1	1.6	1.1	1.7	1.2	1.7	1.2	1.8	1.2	1.9	1.1
	104	40.0	1.5	1.1	1.5	1.1	1.6	1.1	1.6	1.2	1.7	1.2	1.8	1.1	1.9	1.1
	110	43.0	1.4	1.1	1.4	1.1	1.5	1.1	1.6	1.1	1.6	1.1	1.7	1.1	1.8	1.1
20 (2.2)	68	20.0	2.1	1.5	2.2	1.6	2.4	1.6	2.5	1.7	2.5	1.6	2.7	1.6	2.9	1.6
	73	22.5	2.1	1.5	2.2	1.6	2.3	1.5	2.4	1.6	2.5	1.6	2.6	1.6	2.8	1.6
	77	25.0	2.1	1.5	2.2	1.6	2.3	1.5	2.4	1.6	2.4	1.6	2.6	1.6	2.8	1.6
	82	27.5	2.1	1.5	2.1	1.5	2.3	1.5	2.3	1.6	2.4	1.6	2.5	1.5	2.7	1.5
	86	30.0	2.0	1.4	2.1	1.5	2.2	1.5	2.3	1.6	2.4	1.6	2.5	1.5	2.6	1.5
	91	32.5	2.0	1.4	2.0	1.4	2.2	1.5	2.2	1.5	2.3	1.5	2.4	1.5	2.6	1.5
	95	35.0	2.0	1.4	2.0	1.4	2.1	1.4	2.2	1.5	2.3	1.5	2.4	1.5	2.5	1.5
	100	37.5	1.9	1.4	1.9	1.4	2.1	1.4	2.1	1.5	2.2	1.5	2.4	1.5	2.5	1.5
	104	40.0	1.9	1.4	1.9	1.4	2.0	1.4	2.1	1.5	2.2	1.5	2.3	1.5	2.4	1.4
	110	43.0	1.8	1.3	1.8	1.4	2.0	1.4	2.0	1.4	2.1	1.4	2.2	1.4	2.4	1.4
25 (2.8)	68	20.0	2.7	1.9	2.8	1.9	3.0	1.9	3.1	2.0	3.2	2.0	3.4	2.0	3.6	2.0
	73	22.5	2.7	1.9	2.8	1.9	3.0	1.9	3.1	2.0	3.2	2.0	3.4	2.0	3.6	2.0
	77	25.0	2.7	1.9	2.7	1.9	2.9	1.9	3.0	2.0	3.1	2.0	3.3	2.0	3.5	1.9
	82	27.5	2.6	1.8	2.7	1.9	2.9	1.9	3.0	2.0	3.1	2.0	3.2	1.9	3.4	1.9
	86	30.0	2.6	1.8	2.6	1.8	2.8	1.8	2.9	2.0	3.0	1.9	3.2	1.9	3.4	1.9
	91	32.5	2.5	1.8	2.6	1.8	2.8	1.8	2.9	2.0	2.9	1.9	3.1	1.9	3.3	1.9
	95	35.0	2.5	1.8	2.5	1.8	2.7	1.8	2.8	1.9	2.9	1.9	3.1	1.9	3.2	1.8
	100	37.5	2.5	1.8	2.5	1.8	2.6	1.8	2.7	1.9	2.8	1.9	3.0	1.8	3.2	1.8
	104	40.0	2.4	1.7	2.4	1.7	2.6	1.8	2.7	1.9	2.8	1.9	2.9	1.8	3.1	1.8
	110	43.0	2.4	1.7	2.4	1.7	2.5	1.7	2.6	1.8	2.7	1.8	2.8	1.8	3.0	1.7
32 (3.6)	68	20.0	3.5	2.7	3.6	2.7	3.9	2.7	4.0	2.9	4.2	2.9	4.4	2.9	4.7	2.8
	73	22.5	3.5	2.7	3.6	2.7	3.8	2.7	4.0	2.9	4.1	2.9	4.3	2.8	4.6	2.8
	77	25.0	3.4	2.6	3.5	2.7	3.8	2.7	3.9	2.9	4.0	2.8	4.2	2.8	4.5	2.7
	82	27.5	3.4	2.6	3.5	2.7	3.7	2.7	3.8	2.8	3.9	2.8	4.2	2.8	4.4	2.7
	86	30.0	3.3	2.6	3.4	2.6	3.6	2.6	3.7	2.8	3.9	2.8	4.1	2.7	4.3	2.7
	91	32.5	3.3	2.6	3.3	2.6	3.5	2.6	3.7	2.8	3.8	2.7	4.0	2.7	4.2	2.6
	95	35.0	3.2	2.5	3.3	2.6	3.5	2.6	3.6	2.7	3.7	2.7	3.9	2.7	4.2	2.6
	100	37.5	3.2	2.5	3.2	2.5	3.4	2.5	3.5	2.7	3.6	2.7	3.9	2.7	4.1	2.6
	104	40.0	3.1	2.5	3.1	2.5	3.3	2.5	3.4	2.6	3.5	2.6	3.8	2.6	4.0	2.6
	110	43.0	3.0	2.4	3.0	2.5	3.2	2.4	3.3	2.6	3.4	2.6	3.7	2.6	3.9	2.5
40 (4.5)	68	20.0	4.4	3.3	4.5	3.3	4.9	3.4	5.0	3.5	5.2	3.5	5.5	3.5	5.9	3.4
	73	22.5	4.3	3.2	4.5	3.3	4.8	3.3	5.0	3.5	5.1	3.5	5.4	3.4	5.7	3.4
	77	25.0	4.3	3.2	4.4	3.3	4.7	3.3	4.9	3.5	5.0	3.4	5.3	3.4	5.6	3.3
	82	27.5	4.2	3.2	4.3	3.2	4.6	3.2	4.8	3.4	4.9	3.4	5.2	3.4	5.5	3.3
	86	30.0	4.1	3.1	4.2	3.2	4.5	3.2	4.7	3.4	4.8	3.4	5.1	3.3	5.4	3.3
	91	32.5	4.1	3.1	4.2	3.2	4.4	3.1	4.6	3.4	4.7	3.3	5.0	3.3	5.3	3.2
	95	35.0	4.0	3.1	4.1	3.1	4.3	3.1	4.5	3.3	4.6	3.3	4.9	3.2	5.2	3.2
	100	37.5	4.0	3.1	4.0	3.1	4.3	3.1	4.4	3.3	4.5	3.2	4.8	3.2	5.1	3.2
	104	40.0	3.9	3.0	3.9	3.0	4.2	3.0	4.3	3.2	4.4	3.2	4.7	3.2	5.0	3.1
	110	43.0	3.8	3.0	3.8	3.0	4.1	3.0	4.2	3.2	4.3	3.2	4.6	3.1	4.8	3.1
50 (5.6)	68	20.0	5.4	3.8	5.6	3.9	6.0	3.9	6.3	4.2	6.5	4.2	6.9	4.1	7.3	4.0
	73	22.5	5.4	3.8	5.6	3.9	6.0	3.9	6.2	4.1	6.4	4.1	6.7	4.0	7.1	4.0
	77	25.0	5.3	3.8	5.5	3.9	5.9	3.9	6.0	4.0	6.2	4.0	6.6	4.0	7.0	3.9
	82	27.5	5.2	3.7	5.4	3.8	5.7	3.8	5.9	4.0	6.1	4.0	6.5	3.9	6.9	3.9
	86	30.0	5.2	3.7	5.3	3.8	5.6	3.7	5.8	4.0	6.0	3.9	6.4	3.9	6.7	3.8
	91	32.5	5.1	3.7	5.2	3.7	5.5	3.7	5.7	3.9	5.9	3.9	6.2	3.8	6.6	3.8
	95	35.0	5.0	3.6	5.1	3.7	5.4	3.6	5.6	3.9	5.8	3.9	6.1	3.8	6.5	3.7
	100	37.5	4.9	3.6	5.0	3.6	5.3	3.6	5.5	3.8	5.7	3.8	6.0	3.7	6.3	3.7
	104	40.0	4.8	3.5	4.8	3.5	5.2	3.6	5.3	3.7	5.5	3.7	5.9	3.7	6.2	3.6
	110	43.0	4.7	3.5	4.7	3.5	5.0	3.5	5.2	3.7	5.3	3.6	5.7	3.6	6.0	3.6

kcal/h = kW x 860, Btu/h = kW x 3,412

CT

H2. Cooling capacity with PUHY-P300-400YHM /PUHY-EP300, 400Y(S)HM PURY-P300-400YHM /PURY-EP300, 400Y(S)HM

PKFY-P-VBM-E,VHM-E,VKM-E

CA : Capacity(kW) SHC : Sensible Heat Capacity(kW)

Model size (Rated kW)	Outdoor air temp.		Indoor air temp.													
			71 ˚FDB / 59˚FWB		73˚FDB / 61˚FWB		77˚FDB / 64˚FWB		81˚FDB / 66˚FWB		82˚FDB / 68˚FWB		86˚FDB / 72˚FWB		90˚FDB / 75˚FWB	
			21.5˚CDB / 15˚CWB		23˚CDB / 16˚CWB		25˚CDB / 18˚CWB		27˚CDB / 19˚CWB		28˚CDB / 20˚CWB		30˚CDB / 22˚CWB		32˚CDB / 24˚CWB	
	˚FDB	˚CDB	CA	SHC	CA	SHC	CA	SHC	CA	SHC	CA	SHC	CA	SHC	CA	SHC
63 (7.1)	68	20.0	6.9	5.3	7.1	5.4	7.7	5.4	8.0	5.8	8.2	5.8	8.7	5.7	9.2	5.6
	73	22.5	6.9	5.3	7.1	5.4	7.6	5.4	7.8	5.7	8.1	5.7	8.5	5.6	9.1	5.5
	77	25.0	6.8	5.2	7.0	5.4	7.4	5.3	7.7	5.7	7.9	5.6	8.4	5.6	8.9	5.5
	82	27.5	6.6	5.1	6.8	5.3	7.3	5.3	7.5	5.6	7.8	5.6	8.2	5.5	8.7	5.4
	86	30.0	6.5	5.1	6.7	5.2	7.1	5.2	7.4	5.5	7.6	5.5	8.1	5.4	8.5	5.3
	91	32.5	6.4	5.0	6.6	5.2	7.0	5.1	7.2	5.5	7.5	5.5	7.9	5.4	8.4	5.3
	95	35.0	6.3	5.0	6.4	5.1	6.8	5.1	7.1	5.4	7.3	5.4	7.7	5.3	8.2	5.2
	100	37.5	6.2	4.9	6.3	5.1	6.7	5.0	6.9	5.3	7.2	5.3	7.6	5.3	8.0	5.2
	104	40.0	6.1	4.9	6.1	5.0	6.6	5.0	6.8	5.3	7.0	5.3	7.4	5.2	7.8	5.1
	110	43.0	6.0	4.8	6.0	4.9	6.4	4.9	6.6	5.2	6.8	5.2	7.2	5.1	7.6	5.0
100 (11.2)	68	20.0	10.9	7.8	11.3	8.0	12.1	8.0	12.5	8.4	12.9	8.4	13.7	8.3	14.6	8.2
	73	22.5	10.8	7.7	11.2	8.0	11.9	7.9	12.3	8.3	12.7	8.3	13.5	8.2	14.3	8.0
	77	25.0	10.7	7.7	11.0	7.9	11.7	7.8	12.1	8.2	12.5	8.2	13.2	8.1	14.0	7.9
	82	27.5	10.5	7.6	10.8	7.8	11.5	7.7	11.9	8.1	12.2	8.1	13.0	8.0	13.7	7.8
	86	30.0	10.3	7.5	10.5	7.6	11.3	7.6	11.6	8.0	12.0	8.0	12.8	7.9	13.4	7.7
	91	32.5	10.1	7.4	10.4	7.6	11.0	7.5	11.4	7.9	11.8	7.9	12.4	7.7	13.2	7.6
	95	35.0	10.0	7.3	10.1	7.4	10.8	7.4	11.2	7.8	11.5	7.8	12.2	7.7	12.9	7.5
	100	37.5	9.9	7.3	9.9	7.3	10.6	7.3	10.9	7.7	11.3	7.7	12.0	7.6	12.7	7.5
	104	40.0	9.7	7.2	9.7	7.2	10.4	7.2	10.7	7.6	11.0	7.5	11.7	7.5	12.4	7.3
	110	43.0	9.4	7.0	9.4	7.1	10.1	7.1	10.4	7.5	10.7	7.4	11.4	7.3	12.0	7.2

kcal/h = kW x 860, Btu/h = kW x 3,412

H3. Cooling capacity with PUHY-P450-650Y(S)HM/PUHY-EP450-650YSHM PURY-P450-650YSHM/PURY-EP450-600YSHM

PKFY-P-VBM-E,VHM-E,VKM-E

CA : Capacity(kW) SHC : Sensible Heat Capacity(kW)

Model size (Rated kW)	Outdoor air temp.		Indoor air temp.													
			71 ˚FDB / 59˚FWB		73˚FDB / 61˚FWB		77˚FDB / 64˚FWB		81˚FDB / 66˚FWB		82˚FDB / 68˚FWB		86˚FDB / 72˚FWB		90˚FDB / 75˚FWB	
			21.5˚CDB / 15˚CWB		23˚CDB / 16˚CWB		25˚CDB / 18˚CWB		27˚CDB / 19˚CWB		28˚CDB / 20˚CWB		30˚CDB / 22˚CWB		32˚CDB / 24˚CWB	
	˚FDB	˚CDB	CA	SHC	CA	SHC	CA	SHC	CA	SHC	CA	SHC	CA	SHC	CA	SHC
15 (1.7)	68	20.0	1.6	1.2	1.7	1.2	1.8	1.2	1.8	1.2	1.9	1.2	2.0	1.2	2.1	1.2
	73	22.5	1.6	1.2	1.6	1.2	1.8	1.2	1.8	1.2	1.9	1.2	2.0	1.2	2.1	1.2
	77	25.0	1.6	1.1	1.6	1.2	1.7	1.2	1.8	1.2	1.8	1.2	2.0	1.2	2.1	1.2
	82	27.5	1.6	1.1	1.6	1.2	1.7	1.2	1.8	1.2	1.8	1.2	2.0	1.2	2.1	1.2
	86	30.0	1.5	1.1	1.6	1.2	1.7	1.1	1.8	1.2	1.8	1.2	1.9	1.2	2.1	1.2
	91	32.5	1.5	1.1	1.6	1.1	1.7	1.1	1.7	1.2	1.8	1.2	1.9	1.2	2.0	1.2
	95	35.0	1.5	1.1	1.5	1.1	1.7	1.1	1.7	1.2	1.8	1.2	1.9	1.2	2.0	1.2
	100	37.5	1.5	1.1	1.5	1.1	1.6	1.1	1.7	1.2	1.8	1.2	1.9	1.2	2.0	1.2
	104	40.0	1.5	1.1	1.5	1.1	1.6	1.1	1.7	1.2	1.7	1.2	1.9	1.2	2.0	1.2
	110	43.0	1.5	1.1	1.5	1.1	1.6	1.1	1.7	1.2	1.7	1.2	1.8	1.2	2.0	1.2
20 (2.2)	68	20.0	2.1	1.5	2.1	1.5	2.3	1.5	2.4	1.6	2.5	1.6	2.6	1.6	2.8	1.6
	73	22.5	2.1	1.5	2.1	1.5	2.3	1.5	2.3	1.6	2.4	1.6	2.6	1.6	2.7	1.5
	77	25.0	2.0	1.4	2.1	1.5	2.2	1.5	2.3	1.6	2.4	1.6	2.6	1.6	2.7	1.5
	82	27.5	2.0	1.4	2.1	1.5	2.2	1.5	2.3	1.6	2.4	1.6	2.5	1.5	2.6	1.5
	86	30.0	2.0	1.4	2.0	1.4	2.2	1.5	2.3	1.6	2.4	1.6	2.5	1.5	2.7	1.5
	91	32.5	2.0	1.4	2.0	1.4	2.2	1.5	2.2	1.5	2.3	1.5	2.5	1.5	2.6	1.5
	95	35.0	2.0	1.4	2.0	1.4	2.1	1.4	2.2	1.5	2.3	1.5	2.5	1.5	2.6	1.5
	100	37.5	1.9	1.4	2.0	1.4	2.1	1.4	2.2	1.5	2.3	1.5	2.4	1.5	2.6	1.5
	104	40.0	1.9	1.4	1.9	1.4	2.1	1.4	2.1	1.5	2.2	1.5	2.4	1.5	2.6	1.5
	110	43.0	1.9	1.4	1.9	1.4	2.1	1.4	2.1	1.5	2.2	1.5	2.4	1.5	2.6	1.5
25 (2.8)	68	20.0	2.6	1.8	2.7	1.9	2.9	1.9	3.0	2.0	3.1	2.0	3.3	2.0	3.5	1.9
	73	22.5	2.6	1.8	2.7	1.9	2.9	1.9	3.0	2.0	3.1	2.0	3.3	2.0	3.5	1.9
	77	25.0	2.6	1.8	2.7	1.9	2.9	1.9	2.9	2.0	3.1	2.0	3.2	1.9	3.5	1.9
	82	27.5	2.6	1.8	2.6	1.8	2.8	1.8	2.9	2.0	3.0	1.9	3.2	1.9	3.4	1.9
	86	30.0	2.5	1.8	2.6	1.8	2.8	1.8	2.9	2.0	3.0	1.9	3.2	1.9	3.4	1.9
	91	32.5	2.5	1.8	2.6	1.8	2.7	1.8	2.8	1.9	3.0	1.9	3.2	1.9	3.4	1.9
	95	35.0	2.5	1.8	2.5	1.8	2.7	1.8	2.8	1.9	2.9	1.9	3.1	1.9	3.3	1.9
	100	37.5	2.5	1.8	2.5	1.8	2.7	1.8	2.8	1.9	2.9	1.9	3.1	1.9	3.3	1.9
	104	40.0	2.4	1.7	2.5	1.8	2.7	1.8	2.7	1.9	2.9	1.9	3.1	1.9	3.3	1.9
	110	43.0	2.4	1.7	2.5	1.8	2.6	1.8	2.7	1.9	2.8	1.9	3.0	1.8	3.2	1.8
32 (3.6)	68	20.0	3.4	2.6	3.5	2.7	3.7	2.7	3.9	2.9	4.0	2.8	4.2	2.8	4.5	2.7
	73	22.5	3.4	2.6	3.5	2.7	3.7	2.7	3.8	2.8	4.0	2.8	4.2	2.8	4.5	2.7
	77	25.0	3.3	2.6	3.4	2.6	3.7	2.7	3.8	2.8	3.9	2.8	4.2	2.8	4.4	2.7
	82	27.5	3.3	2.6	3.4	2.6	3.6	2.6	3.7	2.8	3.9	2.8	4.1	2.7	4.3	2.7
	86	30.0	3.3	2.6	3.3	2.6	3.6	2.6	3.7	2.8	3.9	2.8	4.1	2.7	4.3	2.7
	91	32.5	3.2	2.5	3.3	2.6	3.5	2.6	3.6	2.7	3.8	2.7	4.1	2.7	4.3	2.7
	95	35.0	3.2	2.5	3.3	2.6	3.5	2.6	3.6	2.7	3.7	2.7	4.0	2.7	4.3	2.7
	100	37.5	3.2	2.5	3.2	2.5	3.5	2.6	3.5	2.7	3.7	2.7	4.0	2.7	4.2	2.6
	104	40.0	3.1	2.5	3.2	2.5	3.4	2.5	3.5	2.7	3.7	2.7	4.0	2.7	4.2	2.6
	110	43.0	3.1	2.5	3.2	2.5	3.4	2.5	3.5	2.7	3.6	2.7	3.9	2.7	4.2	2.6
40 (4.5)	68	20.0	4.3	3.2	4.4	3.3	4.7	3.3	4.8	3.4	5.0	3.4	5.3	3.4	5.7	3.4
	73	22.5	4.2	3.2	4.3	3.2	4.6	3.2	4.8	3.4	5.0	3.4	5.3	3.4	5.6	3.3
	77	25.0	4.2	3.2	4.3	3.2	4.6	3.2	4.7	3.4	4.9	3.4	5.2	3.4	5.6	3.3
	82	27.5	4.1	3.1	4.2	3.2	4.5	3.2	4.7	3.4	4.9	3.4	5.2	3.4	5.4	3.3
	86	30.0	4.1	3.1	4.2	3.2	4.5	3.2	4.6	3.4	4.8	3.4	5.1	3.3	5.4	3.3
	91	32.5	4.1	3.1	4.1	3.1	4.4	3.1	4.5	3.3	4.8	3.4	5.1	3.3	5.4	3.3
	95	35.0	4.0	3.1	4.1	3.1	4.4	3.1	4.5	3.3	4.7	3.3	5.0	3.3	5.4	3.3
	100	37.5	4.0	3.1	4.0	3.1	4.3	3.1	4.4	3.3	4.7	3.3	5.0	3.3	5.3	3.2
	104	40.0	3.9	3.0	4.0	3.1	4.3	3.1	4.4	3.3	4.6	3.3	5.0	3.3	5.3	3.2
	110	43.0	3.9	3.0	3.9	3.0	4.2	3.0	4.3	3.2	4.5	3.2	4.9	3.2	5.2	3.2
50 (5.6)	68	20.0	5.3	3.8	5.5	3.9	5.8	3.8	6.0	4.0	6.2	4.0	6.6	4.0	7.1	4.0
	73	22.5	5.3	3.8	5.4	3.8	5.8	3.8	5.9	4.0	6.2	4.0	6.6	4.0	7.0	3.9
	77	25.0	5.2	3.7	5.3	3.8	5.7	3.8	5.9	4.0	6.1	4.0	6.5	3.9	6.9	3.9
	82	27.5	5.2	3.7	5.3	3.8	5.7	3.8	5.8	4.0	6.0	3.9	6.4	3.9	6.7	3.8
	86	30.0	5.1	3.7	5.2	3.7	5.6	3.7	5.8	4.0	6.0	3.9	6.4	3.9	6.7	3.8
	91	32.5	5.0	3.6	5.2	3.7	5.5	3.7	5.7	3.9	5.9	3.9	6.3	3.9	6.7	3.8
	95	35.0	5.0	3.6	5.1	3.7	5.5	3.7	5.6	3.9	5.8	3.9	6.3	3.9	6.7	3.8
	100	37.5	4.9	3.6	5.0	3.6	5.4	3.6	5.5	3.8	5.8	3.9	6.2	3.8	6.6	3.8
	104	40.0	4.8	3.5	5.0	3.6	5.3	3.6	5.4	3.8	5.7	3.8	6.2	3.8	6.6	3.8
	110	43.0	4.8	3.5	4.9	3.6	5.3	3.6	5.4	3.8	5.7	3.8	6.0	3.7	6.5	3.7

kcal/h = kW x 860, Btu/h = kW x 3,412

CT

H3. Cooling capacity with PUHY-P450-650Y(S)HM/PUHY-EP450-650YSHM PURY-P450-650YSHM/PURY-EP450-600YSHM

PKFY-P-VBM-E,VHM-E,VKM-E

CA : Capacity(kW) SHC : Sensible Heat Capacity(kW)

Model size (Rated kW)	Outdoor air temp.		Indoor air temp.													
			71 ˚FDB / 59˚FWB		73˚FDB / 61˚FWB		77˚FDB / 64˚FWB		81˚FDB / 66˚FWB		82˚FDB / 68˚FWB		86˚FDB / 72˚FWB		90˚FDB / 75˚FWB	
			21.5˚CDB / 15˚CWB		23˚CDB / 16˚CWB		25˚CDB / 18˚CWB		27˚CDB / 19˚CWB		28˚CDB / 20˚CWB		30˚CDB / 22˚CWB		32˚CDB / 24˚CWB	
	˚FDB	˚CDB	CA	SHC	CA	SHC	CA	SHC	CA	SHC	CA	SHC	CA	SHC	CA	SHC
63 (7.1)	68	20.0	6.7	5.2	6.9	5.3	7.4	5.3	7.6	5.6	7.9	5.6	8.4	5.6	8.9	5.5
	73	22.5	6.7	5.2	6.9	5.3	7.3	5.3	7.5	5.6	7.8	5.6	8.3	5.5	8.8	5.4
	77	25.0	6.6	5.1	6.8	5.3	7.2	5.2	7.5	5.6	7.7	5.5	8.2	5.5	8.8	5.4
	82	27.5	6.5	5.1	6.7	5.2	7.2	5.2	7.4	5.5	7.7	5.5	8.2	5.5	8.5	5.3
	86	30.0	6.5	5.1	6.6	5.2	7.1	5.2	7.3	5.5	7.6	5.5	8.1	5.4	8.5	5.3
	91	32.5	6.4	5.0	6.5	5.1	7.0	5.1	7.2	5.5	7.5	5.5	8.0	5.4	8.5	5.3
	95	35.0	6.3	5.0	6.4	5.1	6.9	5.1	7.1	5.4	7.4	5.4	8.0	5.4	8.4	5.3
	100	37.5	6.2	4.9	6.4	5.1	6.8	5.1	7.0	5.4	7.3	5.4	7.8	5.3	8.4	5.3
	104	40.0	6.1	4.9	6.3	5.1	6.8	5.1	6.9	5.3	7.2	5.3	7.8	5.3	8.3	5.3
	110	43.0	6.1	4.9	6.2	5.0	6.7	5.0	6.8	5.3	7.2	5.3	7.7	5.3	8.2	5.2
100 (11.2)	68	20.0	10.6	7.6	10.9	7.8	11.6	7.7	12.0	8.2	12.5	8.2	13.2	8.1	14.1	8.0
	73	22.5	10.5	7.6	10.8	7.8	11.5	7.7	11.9	8.1	12.3	8.1	13.2	8.1	13.9	7.9
	77	25.0	10.4	7.5	10.7	7.7	11.4	7.6	11.8	8.1	12.2	8.1	13.0	8.0	13.8	7.9
	82	27.5	10.3	7.5	10.5	7.6	11.3	7.6	11.6	8.0	12.1	8.0	12.9	7.9	13.4	7.7
	86	30.0	10.2	7.4	10.4	7.6	11.2	7.6	11.5	8.0	12.0	8.0	12.8	7.9	13.4	7.7
	91	32.5	10.1	7.4	10.3	7.5	11.0	7.5	11.3	7.9	11.9	7.9	12.7	7.9	13.4	7.7
	95	35.0	10.0	7.3	10.1	7.4	10.9	7.4	11.2	7.8	11.6	7.8	12.5	7.8	13.3	7.7
	100	37.5	9.9	7.3	10.0	7.4	10.8	7.4	11.0	7.7	11.6	7.8	12.4	7.7	13.2	7.6
	104	40.0	9.7	7.2	9.9	7.3	10.7	7.3	10.9	7.7	11.4	7.7	12.3	7.7	13.1	7.6
	110	43.0	9.6	7.1	9.8	7.3	10.5	7.2	10.8	7.6	11.3	7.7	12.1	7.6	13.0	7.6

kcal/h = kW x 860, Btu/h = kW x 3,412

H4. Cooling capacity with PUHY-P700-800YSHM/PUHY-EP700-800YSHM PURY-P700-800YSHM

PKFY-P-VBM-E,VHM-E,VKM-E

CA : Capacity(kW) SHC : Sensible Heat Capacity(kW)

Model size (Rated kW)	Outdoor air temp.		Indoor air temp.													
			71 ˚FDB / 59˚FWB		73˚FDB / 61˚FWB		77˚FDB / 64˚FWB		81˚FDB / 66˚FWB		82˚FDB / 68˚FWB		86˚FDB / 72˚FWB		90˚FDB / 75˚FWB	
			21.5˚CDB / 15˚CWB		23˚CDB / 16˚CWB		25˚CDB / 18˚CWB		27˚CDB / 19˚CWB		28˚CDB / 20˚CWB		30˚CDB / 22˚CWB		32˚CDB / 24˚CWB	
	˚FDB	˚CDB	CA	SHC	CA	SHC	CA	SHC	CA	SHC	CA	SHC	CA	SHC	CA	SHC
15 (1.7)	68	20.0	1.6	1.2	1.7	1.2	1.8	1.2	1.9	1.3	2.0	1.3	2.1	1.3	2.2	1.2
	73	22.5	1.6	1.2	1.7	1.2	1.8	1.2	1.9	1.3	1.9	1.3	2.0	1.2	2.2	1.2
	77	25.0	1.6	1.1	1.6	1.2	1.8	1.2	1.8	1.2	1.9	1.2	2.0	1.2	2.1	1.2
	82	27.5	1.6	1.1	1.6	1.2	1.7	1.2	1.8	1.2	1.9	1.2	2.0	1.2	2.1	1.2
	86	30.0	1.5	1.1	1.6	1.2	1.7	1.2	1.8	1.2	1.8	1.2	1.9	1.2	2.1	1.2
	91	32.5	1.5	1.1	1.6	1.1	1.7	1.1	1.7	1.2	1.8	1.2	1.9	1.2	2.0	1.2
	95	35.0	1.5	1.1	1.5	1.1	1.6	1.1	1.7	1.2	1.8	1.2	1.9	1.2	2.0	1.2
	100	37.5	1.4	1.1	1.5	1.1	1.6	1.1	1.7	1.2	1.7	1.2	1.8	1.2	2.0	1.1
	104	40.0	1.4	1.1	1.5	1.1	1.6	1.1	1.6	1.2	1.7	1.2	1.8	1.1	1.9	1.1
	110	43.0	1.4	1.1	1.4	1.1	1.5	1.1	1.6	1.1	1.6	1.1	1.8	1.1	1.9	1.1
20 (2.2)	68	20.0	2.1	1.5	2.2	1.6	2.4	1.6	2.4	1.6	2.5	1.6	2.7	1.6	2.9	1.6
	73	22.5	2.1	1.5	2.2	1.6	2.3	1.5	2.4	1.6	2.5	1.6	2.7	1.6	2.8	1.6
	77	25.0	2.1	1.5	2.1	1.5	2.3	1.5	2.4	1.6	2.4	1.6	2.6	1.6	2.8	1.6
	82	27.5	2.0	1.4	2.1	1.5	2.2	1.5	2.3	1.6	2.4	1.6	2.6	1.6	2.7	1.5
	86	30.0	2.0	1.4	2.1	1.5	2.2	1.5	2.3	1.6	2.4	1.6	2.5	1.5	2.7	1.5
	91	32.5	1.9	1.4	2.0	1.4	2.2	1.5	2.2	1.5	2.3	1.5	2.5	1.5	2.6	1.5
	95	35.0	1.9	1.4	2.0	1.4	2.1	1.4	2.2	1.5	2.3	1.5	2.4	1.5	2.6	1.5
	100	37.5	1.9	1.4	2.0	1.4	2.1	1.4	2.2	1.5	2.2	1.5	2.4	1.5	2.5	1.5
	104	40.0	1.8	1.3	1.9	1.4	2.0	1.4	2.1	1.5	2.2	1.5	2.3	1.5	2.5	1.5
	110	43.0	1.8	1.3	1.8	1.4	2.0	1.4	2.1	1.5	2.1	1.4	2.3	1.5	2.4	1.4
25 (2.8)	68	20.0	2.7	1.9	2.8	1.9	3.0	1.9	3.1	2.0	3.2	2.0	3.4	2.0	3.7	2.0
	73	22.5	2.7	1.9	2.8	1.9	3.0	1.9	3.1	2.0	3.2	2.0	3.4	2.0	3.6	2.0
	77	25.0	2.6	1.8	2.7	1.9	2.9	1.9	3.0	2.0	3.1	2.0	3.3	2.0	3.5	1.9
	82	27.5	2.6	1.8	2.7	1.9	2.9	1.9	3.0	2.0	3.1	2.0	3.3	2.0	3.5	1.9
	86	30.0	2.5	1.8	2.6	1.8	2.8	1.8	2.9	2.0	3.0	1.9	3.2	1.9	3.4	1.9
	91	32.5	2.5	1.8	2.6	1.8	2.7	1.8	2.8	1.9	2.9	1.9	3.1	1.9	3.3	1.9
	95	35.0	2.4	1.7	2.5	1.8	2.7	1.8	2.8	1.9	2.9	1.9	3.1	1.9	3.3	1.9
	100	37.5	2.4	1.7	2.5	1.8	2.6	1.8	2.7	1.9	2.8	1.9	3.0	1.8	3.2	1.8
	104	40.0	2.4	1.7	2.4	1.7	2.6	1.8	2.7	1.9	2.8	1.9	3.0	1.8	3.2	1.8
	110	43.0	2.3	1.7	2.4	1.7	2.5	1.7	2.6	1.8	2.7	1.8	2.9	1.8	3.1	1.8
32 (3.6)	68	20.0	3.5	2.7	3.6	2.7	3.9	2.7	4.0	2.9	4.1	2.9	4.4	2.9	4.7	2.8
	73	22.5	3.4	2.6	3.5	2.7	3.8	2.7	3.9	2.9	4.1	2.9	4.4	2.9	4.6	2.8
	77	25.0	3.4	2.6	3.5	2.7	3.7	2.7	3.9	2.9	4.0	2.8	4.2	2.8	4.5	2.7
	82	27.5	3.3	2.6	3.4	2.6	3.7	2.7	3.8	2.8	3.9	2.8	4.2	2.8	4.5	2.7
	86	30.0	3.2	2.5	3.4	2.6	3.6	2.6	3.7	2.8	3.9	2.8	4.1	2.7	4.4	2.7
	91	32.5	3.2	2.5	3.3	2.6	3.5	2.6	3.7	2.8	3.8	2.7	4.0	2.7	4.3	2.7
	95	35.0	3.1	2.5	3.2	2.5	3.5	2.6	3.6	2.7	3.7	2.7	4.0	2.7	4.2	2.6
	100	37.5	3.1	2.5	3.2	2.5	3.4	2.5	3.5	2.7	3.7	2.7	3.9	2.7	4.1	2.6
	104	40.0	3.0	2.4	3.1	2.5	3.3	2.5	3.5	2.7	3.6	2.7	3.8	2.6	4.1	2.6
	110	43.0	3.0	2.4	3.0	2.5	3.2	2.4	3.4	2.6	3.5	2.6	3.7	2.6	4.0	2.6
40 (4.5)	68	20.0	4.3	3.2	4.5	3.3	4.8	3.3	5.0	3.5	5.2	3.5	5.5	3.5	5.9	3.4
	73	22.5	4.3	3.2	4.4	3.3	4.7	3.3	4.9	3.5	5.1	3.5	5.4	3.4	5.8	3.4
	77	25.0	4.2	3.2	4.4	3.3	4.7	3.3	4.8	3.4	5.0	3.4	5.3	3.4	5.7	3.4
	82	27.5	4.1	3.1	4.3	3.2	4.6	3.2	4.7	3.4	4.9	3.4	5.2	3.4	5.6	3.3
	86	30.0	4.1	3.1	4.2	3.2	4.5	3.2	4.7	3.4	4.8	3.4	5.1	3.3	5.5	3.3
	91	32.5	4.0	3.1	4.1	3.1	4.4	3.1	4.6	3.4	4.7	3.3	5.0	3.3	5.4	3.3
	95	35.0	3.9	3.0	4.1	3.1	4.3	3.1	4.5	3.3	4.6	3.3	5.0	3.3	5.3	3.2
	100	37.5	3.8	3.0	4.0	3.1	4.3	3.1	4.4	3.3	4.6	3.3	4.9	3.2	5.2	3.2
	104	40.0	3.8	3.0	3.9	3.0	4.2	3.0	4.3	3.2	4.5	3.2	4.8	3.2	5.1	3.2
	110	43.0	3.7	2.9	3.8	3.0	4.1	3.0	4.2	3.2	4.4	3.2	4.7	3.2	5.0	3.1
50 (5.6)	68	20.0	5.4	3.8	5.6	3.9	6.0	3.9	6.2	4.1	6.4	4.1	6.9	4.1	7.3	4.0
	73	22.5	5.3	3.8	5.5	3.9	5.9	3.9	6.1	4.1	6.3	4.1	6.8	4.1	7.2	4.0
	77	25.0	5.3	3.8	5.4	3.8	5.8	3.8	6.0	4.0	6.2	4.0	6.6	4.0	7.1	4.0
	82	27.5	5.2	3.7	5.3	3.8	5.7	3.8	5.9	4.0	6.1	4.0	6.5	3.9	6.9	3.9
	86	30.0	5.0	3.6	5.2	3.7	5.6	3.7	5.8	4.0	6.0	3.9	6.4	3.9	6.8	3.8
	91	32.5	5.0	3.6	5.1	3.7	5.5	3.7	5.7	3.9	5.9	3.9	6.3	3.9	6.7	3.8
	95	35.0	4.9	3.6	5.0	3.6	5.4	3.6	5.6	3.9	5.8	3.9	6.2	3.8	6.6	3.8
	100	37.5	4.8	3.5	5.0	3.6	5.3	3.6	5.5	3.8	5.7	3.8	6.0	3.7	6.4	3.7
	104	40.0	4.7	3.5	4.8	3.5	5.2	3.6	5.4	3.8	5.6	3.8	5.9	3.7	6.3	3.7
	110	43.0	4.6	3.4	4.7	3.5	5.0	3.5	5.2	3.7	5.4	3.7	5.8	3.7	6.2	3.6

kcal/h = kW x 860, Btu/h = kW x 3,412

CT

H4. Cooling capacity with PUHY-P700-800YSHM/PUHY-EP700-800YSHM PURY-P700-800YSHM

PKFY-P-VBM-E,VHM-E,VKM-E

CA : Capacity(kW) SHC : Sensible Heat Capacity(kW)

Model size (Rated kW)	Outdoor air temp.		Indoor air temp.													
			71 ˚FDB / 59˚FWB		73˚FDB / 61˚FWB		77˚FDB / 64˚FWB		81˚FDB / 66˚FWB		82˚FDB / 68˚FWB		86˚FDB / 72˚FWB		90˚FDB / 75˚FWB	
			21.5˚CDB / 15˚CWB		23˚CDB / 16˚CWB		25˚CDB / 18˚CWB		27˚CDB / 19˚CWB		28˚CDB / 20˚CWB		30˚CDB / 22˚CWB		32˚CDB / 24˚CWB	
	˚FDB	˚CDB	CA	SHC	CA	SHC	CA	SHC	CA	SHC	CA	SHC	CA	SHC	CA	SHC
63 (7.1)	68	20.0	6.9	5.3	7.1	5.4	7.6	5.4	7.9	5.8	8.2	5.8	8.7	5.7	9.3	5.6
	73	22.5	6.7	5.2	7.0	5.4	7.5	5.4	7.8	5.7	8.0	5.7	8.6	5.6	9.1	5.5
	77	25.0	6.7	5.2	6.9	5.3	7.4	5.3	7.6	5.6	7.9	5.6	8.4	5.6	8.9	5.5
	82	27.5	6.5	5.1	6.7	5.2	7.2	5.2	7.5	5.6	7.7	5.5	8.3	5.5	8.8	5.4
	86	30.0	6.4	5.0	6.6	5.2	7.1	5.2	7.3	5.5	7.6	5.5	8.1	5.4	8.7	5.4
	91	32.5	6.3	5.0	6.5	5.1	7.0	5.1	7.2	5.5	7.5	5.5	8.0	5.4	8.5	5.3
	95	35.0	6.2	4.9	6.4	5.1	6.8	5.1	7.1	5.4	7.3	5.4	7.8	5.3	8.3	5.3
	100	37.5	6.1	4.9	6.3	5.1	6.7	5.0	7.0	5.4	7.2	5.3	7.7	5.3	8.2	5.2
	104	40.0	6.0	4.8	6.1	5.0	6.6	5.0	6.8	5.3	7.1	5.3	7.5	5.2	8.0	5.2
	110	43.0	5.8	4.7	6.0	4.9	6.4	4.9	6.6	5.2	6.9	5.2	7.3	5.2	7.8	5.1
100 (11.2)	68	20.0	10.8	7.7	11.2	8.0	12.0	7.9	12.5	8.4	12.9	8.4	13.8	8.3	14.6	8.2
	73	22.5	10.6	7.6	11.0	7.9	11.8	7.8	12.2	8.3	12.7	8.3	13.6	8.2	14.3	8.0
	77	25.0	10.5	7.6	10.9	7.8	11.6	7.7	12.0	8.2	12.4	8.1	13.2	8.1	14.1	8.0
	82	27.5	10.3	7.5	10.6	7.7	11.4	7.6	11.8	8.1	12.2	8.1	13.0	8.0	13.9	7.9
	86	30.0	10.1	7.4	10.5	7.6	11.2	7.6	11.6	8.0	12.0	8.0	12.8	7.9	13.7	7.8
	91	32.5	9.9	7.3	10.2	7.5	11.0	7.5	11.4	7.9	11.8	7.9	12.5	7.8	13.4	7.7
	95	35.0	9.7	7.2	10.1	7.4	10.8	7.4	11.2	7.8	11.5	7.8	12.3	7.7	13.1	7.6
	100	37.5	9.6	7.1	10.0	7.4	10.6	7.3	11.0	7.7	11.4	7.7	12.1	7.6	12.9	7.5
	104	40.0	9.4	7.0	9.6	7.2	10.4	7.2	10.8	7.6	11.1	7.6	11.9	7.5	12.6	7.4
	110	43.0	9.2	6.9	9.4	7.1	10.1	7.1	10.5	7.5	10.9	7.5	11.6	7.4	12.3	7.3

kcal/h = kW x 860, Btu/h = kW x 3,412

H5. Cooling capacity with PUHY-P850-1250YSHM/PUHY-EP850-900YSHM

PKFY-P-VBM-E,VHM-E,VKM-E

CA : Capacity(kW) SHC : Sensible Heat Capacity(kW)

Model size (Rated kW)	Outdoor air temp.		Indoor air temp.													
			71 ˚FDB / 59˚FWB		73˚FDB / 61˚FWB		77˚FDB / 64˚FWB		81˚FDB / 66˚FWB		82˚FDB / 68˚FWB		86˚FDB / 72˚FWB		90˚FDB / 75˚FWB	
			21.5˚CDB / 15˚CWB		23˚CDB / 16˚CWB		25˚CDB / 18˚CWB		27˚CDB / 19˚CWB		28˚CDB / 20˚CWB		30˚CDB / 22˚CWB		32˚CDB / 24˚CWB	
	˚FDB	˚CDB	CA	SHC	CA	SHC	CA	SHC	CA	SHC	CA	SHC	CA	SHC	CA	SHC
15 (1.7)	68	20.0	1.6	1.2	1.6	1.2	1.8	1.2	1.8	1.2	1.9	1.2	2.0	1.2	2.1	1.2
	73	22.5	1.6	1.2	1.6	1.2	1.7	1.2	1.8	1.2	1.9	1.2	2.0	1.2	2.1	1.2
	77	25.0	1.6	1.1	1.6	1.2	1.7	1.2	1.8	1.2	1.8	1.2	2.0	1.2	2.1	1.2
	82	27.5	1.6	1.1	1.6	1.2	1.7	1.2	1.8	1.2	1.8	1.2	2.0	1.2	2.1	1.2
	86	30.0	1.5	1.1	1.6	1.2	1.7	1.1	1.7	1.2	1.8	1.2	1.9	1.2	2.0	1.2
	91	32.5	1.5	1.1	1.6	1.1	1.7	1.1	1.7	1.2	1.8	1.2	1.9	1.2	2.0	1.2
	95	35.0	1.5	1.1	1.5	1.1	1.6	1.1	1.7	1.2	1.8	1.2	1.9	1.2	2.0	1.2
	100	37.5	1.5	1.1	1.5	1.1	1.6	1.1	1.7	1.2	1.8	1.2	1.9	1.2	2.0	1.2
	104	40.0	1.5	1.1	1.5	1.1	1.6	1.1	1.7	1.2	1.7	1.2	1.9	1.2	2.0	1.2
	110	43.0	1.5	1.1	1.5	1.1	1.6	1.1	1.6	1.2	1.7	1.2	1.8	1.2	2.0	1.2
20 (2.2)	68	20.0	2.1	1.5	2.1	1.5	2.3	1.5	2.4	1.6	2.4	1.6	2.6	1.6	2.8	1.5
	73	22.5	2.1	1.5	2.1	1.5	2.3	1.5	2.3	1.6	2.4	1.6	2.6	1.6	2.7	1.5
	77	25.0	2.0	1.5	2.1	1.5	2.2	1.5	2.3	1.6	2.4	1.6	2.6	1.6	2.7	1.5
	82	27.5	2.0	1.4	2.1	1.5	2.2	1.5	2.3	1.6	2.4	1.6	2.5	1.5	2.7	1.5
	86	30.0	2.0	1.4	2.0	1.5	2.2	1.5	2.3	1.5	2.3	1.5	2.5	1.5	2.7	1.5
	91	32.5	2.0	1.4	2.0	1.5	2.2	1.5	2.2	1.5	2.3	1.5	2.5	1.5	2.6	1.5
	95	35.0	1.9	1.4	2.0	1.4	2.1	1.4	2.2	1.5	2.3	1.5	2.5	1.5	2.6	1.5
	100	37.5	1.9	1.4	2.0	1.4	2.1	1.4	2.2	1.5	2.3	1.5	2.4	1.5	2.6	1.5
	104	40.0	1.9	1.4	1.9	1.4	2.1	1.4	2.2	1.5	2.2	1.5	2.4	1.5	2.6	1.5
	110	43.0	1.9	1.4	1.9	1.4	2.1	1.4	2.1	1.5	2.2	1.5	2.4	1.5	2.5	1.5
25 (2.8)	68	20.0	2.6	1.9	2.7	1.9	2.9	1.9	3.0	2.0	3.1	2.0	3.3	2.0	3.5	1.9
	73	22.5	2.6	1.9	2.7	1.9	2.9	1.9	3.0	2.0	3.1	2.0	3.3	2.0	3.5	1.9
	77	25.0	2.6	1.8	2.7	1.9	2.9	1.9	2.9	2.0	3.0	2.0	3.2	1.9	3.4	1.9
	82	27.5	2.6	1.8	2.6	1.9	2.8	1.9	2.9	2.0	3.0	2.0	3.2	1.9	3.4	1.9
	86	30.0	2.5	1.8	2.6	1.8	2.8	1.8	2.9	1.9	3.0	1.9	3.2	1.9	3.4	1.9
	91	32.5	2.5	1.8	2.6	1.8	2.7	1.8	2.8	1.9	2.9	1.9	3.2	1.9	3.4	1.9
	95	35.0	2.5	1.8	2.5	1.8	2.7	1.8	2.8	1.9	2.9	1.9	3.1	1.9	3.3	1.9
	100	37.5	2.5	1.8	2.5	1.8	2.7	1.8	2.8	1.9	2.9	1.9	3.1	1.9	3.3	1.9
	104	40.0	2.4	1.7	2.5	1.8	2.6	1.8	2.7	1.9	2.9	1.9	3.1	1.9	3.3	1.8
	110	43.0	2.4	1.7	2.4	1.8	2.6	1.8	2.7	1.9	2.8	1.9	3.0	1.9	3.2	1.8
32 (3.6)	68	20.0	3.4	2.6	3.5	2.7	3.7	2.7	3.9	2.8	4.0	2.8	4.2	2.8	4.5	2.8
	73	22.5	3.4	2.6	3.5	2.7	3.7	2.7	3.8	2.8	4.0	2.8	4.2	2.8	4.5	2.7
	77	25.0	3.3	2.6	3.4	2.6	3.7	2.6	3.8	2.8	3.9	2.8	4.2	2.8	4.4	2.7
	82	27.5	3.3	2.6	3.4	2.6	3.6	2.6	3.7	2.8	3.9	2.8	4.1	2.8	4.4	2.7
	86	30.0	3.3	2.5	3.3	2.6	3.6	2.6	3.7	2.8	3.8	2.8	4.1	2.7	4.3	2.7
	91	32.5	3.2	2.5	3.3	2.6	3.5	2.6	3.7	2.8	3.8	2.7	4.1	2.7	4.3	2.7
	95	35.0	3.2	2.5	3.3	2.6	3.5	2.6	3.6	2.7	3.8	2.7	4.0	2.7	4.3	2.7
	100	37.5	3.2	2.5	3.2	2.5	3.4	2.5	3.6	2.7	3.7	2.7	4.0	2.7	4.2	2.7
	104	40.0	3.1	2.5	3.2	2.5	3.4	2.5	3.5	2.7	3.7	2.7	3.9	2.7	4.2	2.6
	110	43.0	3.1	2.5	3.1	2.5	3.4	2.5	3.5	2.7	3.6	2.7	3.9	2.7	4.2	2.6
40 (4.5)	68	20.0	4.3	3.2	4.4	3.3	4.7	3.3	4.8	3.4	5.0	3.4	5.3	3.4	5.6	3.3
	73	22.5	4.2	3.2	4.3	3.2	4.6	3.2	4.8	3.4	4.9	3.4	5.3	3.4	5.6	3.3
	77	25.0	4.2	3.1	4.3	3.2	4.6	3.2	4.7	3.4	4.9	3.4	5.2	3.4	5.5	3.3
	82	27.5	4.1	3.1	4.2	3.2	4.5	3.2	4.7	3.4	4.8	3.4	5.2	3.3	5.5	3.3
	86	30.0	4.1	3.1	4.2	3.2	4.5	3.2	4.6	3.4	4.8	3.3	5.1	3.3	5.4	3.3
	91	32.5	4.0	3.1	4.1	3.1	4.4	3.1	4.6	3.3	4.7	3.3	5.1	3.3	5.4	3.3
	95	35.0	4.0	3.1	4.1	3.1	4.4	3.1	4.5	3.3	4.7	3.3	5.0	3.3	5.3	3.2
	100	37.5	3.9	3.0	4.0	3.1	4.3	3.1	4.5	3.3	4.6	3.3	5.0	3.3	5.3	3.2
	104	40.0	3.9	3.0	4.0	3.1	4.3	3.1	4.4	3.3	4.6	3.3	4.9	3.2	5.2	3.2
	110	43.0	3.8	3.0	3.9	3.1	4.2	3.0	4.4	3.2	4.5	3.2	4.9	3.2	5.2	3.2
50 (5.6)	68	20.0	5.3	3.8	5.4	3.9	5.8	3.8	6.0	4.0	6.2	4.0	6.6	4.0	7.0	3.9
	73	22.5	5.2	3.7	5.4	3.8	5.8	3.8	5.9	4.0	6.1	4.0	6.6	4.0	7.0	3.9
	77	25.0	5.2	3.7	5.3	3.8	5.7	3.8	5.9	4.0	6.1	4.0	6.5	3.9	6.9	3.9
	82	27.5	5.1	3.7	5.3	3.8	5.6	3.7	5.8	4.0	6.0	4.0	6.4	3.9	6.8	3.9
	86	30.0	5.1	3.7	5.2	3.7	5.6	3.7	5.8	3.9	5.9	3.9	6.4	3.9	6.7	3.8
	91	32.5	5.0	3.6	5.1	3.7	5.5	3.7	5.7	3.9	5.9	3.9	6.3	3.9	6.7	3.8
	95	35.0	5.0	3.6	5.1	3.7	5.4	3.7	5.6	3.9	5.8	3.9	6.3	3.8	6.7	3.8
	100	37.5	4.9	3.6	5.0	3.6	5.4	3.6	5.6	3.8	5.8	3.8	6.2	3.8	6.6	3.8
	104	40.0	4.8	3.5	4.9	3.6	5.3	3.6	5.5	3.8	5.7	3.8	6.1	3.8	6.5	3.7
	110	43.0	4.8	3.5	4.9	3.6	5.2	3.6	5.4	3.8	5.6	3.8	6.0	3.8	6.5	3.7

kcal/h = kW x 860, Btu/h = kW x 3,412

CT

H5. Cooling capacity with PUHY-P850-1250YSHM/PUHY-EP850-900YSHM

PKFY-P-VBM-E,VHM-E,VKM-E

CA : Capacity(kW) SHC : Sensible Heat Capacity(kW)

Model size (Rated kW)	Outdoor air temp.		Indoor air temp.													
			71 ˚FDB / 59˚FWB		73˚FDB / 61˚FWB		77˚FDB / 64˚FWB		81˚FDB / 66˚FWB		82˚FDB / 68˚FWB		86˚FDB / 72˚FWB		90˚FDB / 75˚FWB	
			21.5˚CDB / 15˚CWB		23˚CDB / 16˚CWB		25˚CDB / 18˚CWB		27˚CDB / 19˚CWB		28˚CDB / 20˚CWB		30˚CDB / 22˚CWB		32˚CDB / 24˚CWB	
	˚FDB	˚CDB	CA	SHC	CA	SHC	CA	SHC	CA	SHC	CA	SHC	CA	SHC	CA	SHC
63 (7.1)	68	20.0	6.7	5.2	6.9	5.3	7.4	5.3	7.6	5.6	7.9	5.6	8.4	5.6	8.9	5.5
	73	22.5	6.6	5.1	6.8	5.3	7.3	5.3	7.5	5.6	7.8	5.6	8.3	5.5	8.8	5.4
	77	25.0	6.6	5.1	6.7	5.3	7.2	5.2	7.5	5.6	7.7	5.6	8.2	5.5	8.7	5.4
	82	27.5	6.5	5.1	6.7	5.2	7.1	5.2	7.4	5.5	7.6	5.5	8.2	5.5	8.7	5.4
	86	30.0	6.4	5.0	6.6	5.2	7.1	5.2	7.3	5.5	7.5	5.5	8.1	5.4	8.6	5.4
	91	32.5	6.4	5.0	6.5	5.1	7.0	5.1	7.2	5.5	7.5	5.5	8.0	5.4	8.5	5.3
	95	35.0	6.3	5.0	6.4	5.1	6.9	5.1	7.1	5.4	7.4	5.4	7.9	5.4	8.4	5.3
	100	37.5	6.2	4.9	6.3	5.1	6.8	5.1	7.0	5.4	7.3	5.4	7.8	5.4	8.4	5.3
	104	40.0	6.1	4.9	6.2	5.0	6.7	5.0	7.0	5.4	7.2	5.4	7.8	5.3	8.3	5.3
	110	43.0	6.1	4.9	6.2	5.0	6.6	5.0	6.9	5.3	7.2	5.3	7.7	5.3	8.2	5.2
100 (11.2)	68	20.0	10.6	7.6	10.9	7.8	11.6	7.8	12.0	8.2	12.4	8.2	13.2	8.1	14.0	7.9
	73	22.5	10.5	7.5	10.8	7.7	11.5	7.7	11.9	8.1	12.3	8.1	13.1	8.0	13.9	7.9
	77	25.0	10.4	7.5	10.6	7.7	11.4	7.6	11.8	8.1	12.2	8.1	13.0	8.0	13.8	7.9
	82	27.5	10.2	7.4	10.5	7.6	11.2	7.6	11.6	8.0	12.0	8.0	12.9	7.9	13.7	7.8
	86	30.0	10.1	7.4	10.4	7.5	11.1	7.5	11.5	8.0	11.9	7.9	12.7	7.9	13.5	7.7
	91	32.5	10.0	7.3	10.2	7.5	11.0	7.5	11.4	7.9	11.8	7.9	12.6	7.8	13.4	7.7
	95	35.0	9.9	7.3	10.1	7.4	10.9	7.4	11.2	7.8	11.7	7.8	12.5	7.8	13.3	7.7
	100	37.5	9.8	7.2	10.0	7.4	10.7	7.3	11.1	7.8	11.6	7.8	12.4	7.7	13.2	7.6
	104	40.0	9.7	7.2	9.9	7.3	10.6	7.3	11.0	7.7	11.4	7.7	12.2	7.7	13.0	7.6
	110	43.0	9.6	7.1	9.7	7.2	10.4	7.2	10.8	7.7	11.3	7.7	12.1	7.6	12.9	7.5

kcal/h = kW x 860, Btu/h = kW x 3,412

H6. Cooling capacity with PUHY-HP200-500Y(S)HM

PKFY-P-VBM-E,VHM-E,VKM-E

CA : Capacity(kW) SHC : Sensible Heat Capacity(kW)

Model size (Rated kW)	Outdoor air temp.		Indoor air temp.													
			71 ˚FDB / 59˚FWB		73˚FDB / 61˚FWB		77˚FDB / 64˚FWB		81˚FDB / 66˚FWB		82˚FDB / 68˚FWB		86˚FDB / 72˚FWB		90˚FDB / 75˚FWB	
			21.5˚CDB / 15˚CWB		23˚CDB / 16˚CWB		25˚CDB / 18˚CWB		27˚CDB / 19˚CWB		28˚CDB / 20˚CWB		30˚CDB / 22˚CWB		32˚CDB / 24˚CWB	
	˚FDB	˚CDB	CA	SHC	CA	SHC	CA	SHC	CA	SHC	CA	SHC	CA	SHC	CA	SHC
15 (1.7)	68	20.0	1.5	1.1	1.6	1.2	1.7	1.2	1.8	1.2	1.9	1.2	2.0	1.2	2.1	1.2
	73	22.5	1.5	1.1	1.6	1.2	1.7	1.2	1.8	1.2	1.9	1.2	2.0	1.2	2.1	1.2
	77	25.0	1.5	1.1	1.6	1.2	1.7	1.2	1.8	1.2	1.9	1.2	2.0	1.2	2.1	1.2
	82	27.5	1.5	1.1	1.6	1.2	1.7	1.2	1.8	1.2	1.8	1.2	1.9	1.2	2.0	1.2
	86	30.0	1.5	1.1	1.6	1.2	1.7	1.1	1.8	1.2	1.8	1.2	1.9	1.2	2.0	1.2
	91	32.5	1.5	1.1	1.6	1.1	1.6	1.1	1.7	1.2	1.8	1.2	1.9	1.2	2.0	1.1
	95	35.0	1.5	1.1	1.5	1.1	1.6	1.1	1.7	1.2	1.8	1.2	1.8	1.2	1.9	1.1
	100	37.5	1.5	1.1	1.5	1.1	1.6	1.1	1.7	1.2	1.7	1.2	1.8	1.1	1.9	1.1
	104	40.0	1.5	1.1	1.5	1.1	1.6	1.1	1.6	1.2	1.7	1.2	1.8	1.1	1.8	1.1
	110	43.0	1.4	1.1	1.5	1.1	1.6	1.1	1.6	1.2	1.6	1.1	1.7	1.1	1.8	1.1
20 (2.2)	68	20.0	1.9	1.4	2.1	1.5	2.2	1.5	2.4	1.6	2.4	1.6	2.6	1.6	2.7	1.5
	73	22.5	1.9	1.4	2.1	1.5	2.2	1.5	2.4	1.6	2.4	1.6	2.6	1.6	2.7	1.5
	77	25.0	1.9	1.4	2.1	1.5	2.2	1.5	2.4	1.6	2.4	1.6	2.6	1.6	2.7	1.5
	82	27.5	1.9	1.4	2.1	1.5	2.2	1.5	2.3	1.6	2.4	1.6	2.5	1.5	2.6	1.5
	86	30.0	1.9	1.4	2.0	1.5	2.2	1.5	2.3	1.6	2.4	1.5	2.5	1.5	2.6	1.5
	91	32.5	1.9	1.4	2.0	1.5	2.1	1.4	2.2	1.5	2.3	1.5	2.4	1.5	2.5	1.5
	95	35.0	1.9	1.4	2.0	1.4	2.1	1.4	2.2	1.5	2.3	1.5	2.4	1.5	2.5	1.4
	100	37.5	1.9	1.4	2.0	1.4	2.1	1.4	2.2	1.5	2.2	1.5	2.3	1.5	2.4	1.4
	104	40.0	1.9	1.4	1.9	1.4	2.0	1.4	2.1	1.5	2.2	1.5	2.3	1.4	2.4	1.4
	110	43.0	1.9	1.4	1.9	1.4	2.0	1.4	2.1	1.5	2.1	1.5	2.2	1.4	2.3	1.4
25 (2.8)	68	20.0	2.5	1.8	2.7	1.9	2.8	1.9	3.0	2.0	3.1	2.0	3.3	2.0	3.5	1.9
	73	22.5	2.5	1.8	2.7	1.9	2.8	1.9	3.0	2.0	3.1	2.0	3.3	2.0	3.5	1.9
	77	25.0	2.5	1.8	2.7	1.9	2.8	1.9	3.0	2.0	3.1	2.0	3.3	2.0	3.4	1.9
	82	27.5	2.5	1.8	2.6	1.9	2.8	1.8	2.9	2.0	3.0	2.0	3.2	1.9	3.4	1.9
	86	30.0	2.4	1.8	2.6	1.8	2.8	1.8	2.9	2.0	3.0	1.9	3.1	1.9	3.3	1.9
	91	32.5	2.4	1.8	2.6	1.8	2.7	1.8	2.8	1.9	2.9	1.9	3.1	1.9	3.2	1.8
	95	35.0	2.4	1.7	2.5	1.8	2.7	1.8	2.8	1.9	2.9	1.9	3.0	1.9	3.2	1.8
	100	37.5	2.4	1.7	2.5	1.8	2.6	1.8	2.8	1.9	2.8	1.9	3.0	1.8	3.1	1.8
	104	40.0	2.4	1.7	2.5	1.8	2.6	1.8	2.7	1.9	2.8	1.9	2.9	1.8	3.0	1.8
	110	43.0	2.4	1.7	2.4	1.8	2.6	1.7	2.7	1.8	2.7	1.8	2.8	1.8	2.9	1.7
32 (3.6)	68	20.0	3.2	2.5	3.4	2.6	3.6	2.6	3.9	2.8	4.0	2.8	4.2	2.8	4.5	2.7
	73	22.5	3.2	2.5	3.4	2.6	3.6	2.6	3.9	2.8	4.0	2.8	4.2	2.8	4.5	2.7
	77	25.0	3.2	2.5	3.4	2.6	3.6	2.6	3.8	2.8	4.0	2.8	4.2	2.8	4.4	2.7
	82	27.5	3.2	2.5	3.4	2.6	3.6	2.6	3.8	2.8	3.9	2.8	4.1	2.7	4.3	2.7
	86	30.0	3.1	2.5	3.3	2.6	3.5	2.6	3.7	2.8	3.8	2.8	4.0	2.7	4.2	2.7
	91	32.5	3.1	2.5	3.3	2.6	3.5	2.6	3.7	2.8	3.8	2.7	4.0	2.7	4.1	2.6
	95	35.0	3.1	2.5	3.3	2.6	3.4	2.5	3.6	2.7	3.7	2.7	3.9	2.7	4.1	2.6
	100	37.5	3.1	2.5	3.2	2.6	3.4	2.5	3.5	2.7	3.6	2.7	3.8	2.6	4.0	2.6
	104	40.0	3.1	2.4	3.2	2.5	3.3	2.5	3.5	2.7	3.6	2.7	3.7	2.6	3.9	2.5
	110	43.0	3.0	2.4	3.1	2.5	3.3	2.5	3.4	2.6	3.5	2.6	3.6	2.6	3.8	2.5
40 (4.5)	68	20.0	4.0	3.0	4.3	3.2	4.5	3.2	4.8	3.4	5.0	3.4	5.3	3.4	5.6	3.3
	73	22.5	4.0	3.0	4.3	3.2	4.5	3.2	4.8	3.4	5.0	3.4	5.3	3.4	5.6	3.3
	77	25.0	4.0	3.0	4.3	3.2	4.5	3.2	4.8	3.4	5.0	3.4	5.3	3.4	5.5	3.3
	82	27.5	4.0	3.0	4.2	3.2	4.5	3.2	4.7	3.4	4.9	3.4	5.1	3.3	5.4	3.3
	86	30.0	3.9	3.0	4.2	3.2	4.4	3.1	4.7	3.4	4.8	3.4	5.1	3.3	5.3	3.2
	91	32.5	3.9	3.0	4.1	3.2	4.4	3.1	4.6	3.3	4.7	3.3	5.0	3.3	5.2	3.2
	95	35.0	3.9	3.0	4.1	3.1	4.3	3.1	4.5	3.3	4.6	3.3	4.9	3.2	5.1	3.2
	100	37.5	3.9	3.0	4.0	3.1	4.2	3.1	4.4	3.3	4.5	3.3	4.8	3.2	5.0	3.1
	104	40.0	3.8	3.0	4.0	3.1	4.2	3.0	4.4	3.2	4.5	3.2	4.7	3.2	4.9	3.1
	110	43.0	3.8	3.0	3.9	3.1	4.1	3.0	4.3	3.2	4.4	3.2	4.5	3.1	4.7	3.0
50 (5.6)	68	20.0	4.9	3.6	5.3	3.8	5.6	3.8	6.0	4.0	6.2	4.0	6.6	4.0	7.0	3.9
	73	22.5	4.9	3.6	5.3	3.8	5.6	3.8	6.0	4.0	6.2	4.0	6.6	4.0	7.0	3.9
	77	25.0	4.9	3.6	5.3	3.8	5.6	3.8	6.0	4.0	6.2	4.0	6.5	4.0	6.9	3.9
	82	27.5	4.9	3.6	5.3	3.8	5.6	3.7	5.9	4.0	6.1	4.0	6.4	3.9	6.7	3.8
	86	30.0	4.9	3.6	5.2	3.7	5.5	3.7	5.8	4.0	6.0	3.9	6.3	3.9	6.6	3.8
	91	32.5	4.9	3.5	5.1	3.7	5.4	3.7	5.7	3.9	5.9	3.9	6.2	3.8	6.4	3.7
	95	35.0	4.8	3.5	5.1	3.7	5.4	3.6	5.6	3.9	5.8	3.8	6.1	3.8	6.3	3.7
	100	37.5	4.8	3.5	5.0	3.6	5.3	3.6	5.5	3.8	5.7	3.8	5.9	3.7	6.2	3.6
	104	40.0	4.8	3.5	5.0	3.6	5.2	3.6	5.4	3.8	5.6	3.8	5.8	3.7	6.1	3.6
	110	43.0	4.7	3.5	4.9	3.6	5.1	3.5	5.3	3.7	5.4	3.7	5.7	3.6	5.9	3.5

kcal/h = kW x 860, Btu/h = kW x 3,412

CT

H6. Cooling capacity with PUHY-HP200-500Y(S)HM

PKFY-P-VBM-E,VHM-E,VKM-E

CA : Capacity(kW) SHC : Sensible Heat Capacity(kW)

Model size (Rated kW)	Outdoor air temp.		Indoor air temp.													
			71 ˚FDB / 59˚FWB		73˚FDB / 61˚FWB		77˚FDB / 64˚FWB		81˚FDB / 66˚FWB		82˚FDB / 68˚FWB		86˚FDB / 72˚FWB		90˚FDB / 75˚FWB	
			21.5˚CDB / 15˚CWB		23˚CDB / 16˚CWB		25˚CDB / 18˚CWB		27˚CDB / 19˚CWB		28˚CDB / 20˚CWB		30˚CDB / 22˚CWB		32˚CDB / 24˚CWB	
	˚FDB	˚CDB	CA	SHC	CA	SHC	CA	SHC	CA	SHC	CA	SHC	CA	SHC	CA	SHC
63 (7.1)	68	20.0	6.3	5.0	6.7	5.2	7.2	5.2	7.6	5.6	7.9	5.6	8.4	5.5	8.8	5.5
	73	22.5	6.3	5.0	6.7	5.2	7.2	5.2	7.6	5.6	7.9	5.6	8.4	5.5	8.8	5.5
	77	25.0	6.3	5.0	6.7	5.2	7.2	5.2	7.6	5.6	7.8	5.6	8.3	5.5	8.7	5.4
	82	27.5	6.2	5.0	6.7	5.2	7.1	5.2	7.5	5.6	7.7	5.5	8.1	5.5	8.5	5.3
	86	30.0	6.2	4.9	6.6	5.2	7.0	5.1	7.4	5.5	7.6	5.5	8.0	5.4	8.4	5.3
	91	32.5	6.2	4.9	6.5	5.2	6.9	5.1	7.2	5.5	7.4	5.4	7.8	5.3	8.2	5.2
	95	35.0	6.1	4.9	6.4	5.1	6.8	5.1	7.1	5.4	7.3	5.4	7.7	5.3	8.0	5.2
	100	37.5	6.1	4.9	6.4	5.1	6.7	5.0	7.0	5.4	7.2	5.3	7.5	5.2	7.8	5.1
	104	40.0	6.1	4.9	6.3	5.0	6.6	5.0	6.9	5.3	7.1	5.3	7.4	5.2	7.7	5.1
	110	43.0	6.0	4.8	6.2	5.0	6.5	4.9	6.7	5.3	6.9	5.2	7.2	5.1	7.5	5.0
100 (11.2)	68	20.0	9.9	7.2	10.6	7.7	11.3	7.6	12.0	8.2	12.5	8.2	13.2	8.1	13.9	7.9
	73	22.5	9.9	7.2	10.6	7.7	11.3	7.6	12.0	8.2	12.5	8.2	13.2	8.1	13.9	7.9
	77	25.0	9.9	7.2	10.6	7.7	11.3	7.6	12.0	8.2	12.4	8.1	13.1	8.0	13.7	7.8
	82	27.5	9.8	7.2	10.5	7.6	11.2	7.5	11.8	8.1	12.2	8.0	12.8	7.9	13.4	7.7
	86	30.0	9.8	7.2	10.4	7.6	11.0	7.5	11.6	8.0	12.0	8.0	12.6	7.8	13.2	7.6
	91	32.5	9.7	7.2	10.3	7.5	10.9	7.4	11.4	7.9	11.7	7.9	12.3	7.7	12.9	7.5
	95	35.0	9.7	7.1	10.2	7.4	10.7	7.3	11.2	7.8	11.6	7.8	12.1	7.6	12.7	7.4
	100	37.5	9.6	7.1	10.0	7.4	10.6	7.3	11.0	7.7	11.3	7.7	11.8	7.5	12.4	7.3
	104	40.0	9.6	7.1	9.9	7.3	10.4	7.2	10.8	7.7	11.1	7.6	11.6	7.4	12.1	7.2
	110	43.0	9.5	7.0	9.8	7.2	10.2	7.1	10.6	7.6	10.9	7.5	11.3	7.3	11.8	7.1

kcal/h = kW x 860, Btu/h = kW x 3,412

CT

H7. Cooling capacity with PQHY-P200-900Y(S)HM PQRY-P200-600Y(S)HM

PKFY-P-VBM-E,VHM-E,VKM-E

CA : Capacity(kW) SHC : Sensible Heat Capacity(kW)

Model size (Rated kW)	Water temp.		Indoor air temp.													
			71 ˚FDB / 59˚FWB		73˚FDB / 61˚FWB		77˚FDB / 64˚FWB		81˚FDB / 66˚FWB		82˚FDB / 68˚FWB		86˚FDB / 72˚FWB		90˚FDB / 75˚FWB	
			21.5˚CDB / 15˚CWB		23˚CDB / 16˚CWB		25˚CDB / 18˚CWB		27˚CDB / 19˚CWB		28˚CDB / 20˚CWB		30˚CDB / 22˚CWB		32˚CDB / 24˚CWB	
	˚F	˚C	CA	SHC	CA	SHC	CA	SHC	CA	SHC	CA	SHC	CA	SHC	CA	SHC
15 (1.7)	50	10.0	1.5	1.1	1.6	1.1	1.7	1.1	1.7	1.2	1.7	1.2	1.7	1.1	1.7	1.1
	68	20.0	1.5	1.1	1.6	1.1	1.7	1.1	1.7	1.2	1.7	1.2	1.7	1.1	1.7	1.1
	86	30.0	1.5	1.1	1.6	1.1	1.7	1.1	1.7	1.2	1.7	1.2	1.7	1.1	1.7	1.1
	104	40.0	1.4	1.0	1.4	1.1	1.5	1.1	1.5	1.1	1.5	1.1	1.5	1.0	1.5	1.0
	113	45.0	1.3	1.0	1.3	1.0	1.4	1.0	1.4	1.1	1.4	1.1	1.4	1.0	1.4	1.0
20 (2.2)	50	10.0	2.0	1.4	2.0	1.5	2.1	1.4	2.2	1.5	2.2	1.5	2.2	1.4	2.2	1.3
	68	20.0	2.0	1.4	2.0	1.5	2.1	1.4	2.2	1.5	2.2	1.5	2.2	1.4	2.2	1.3
	86	30.0	2.0	1.4	2.0	1.5	2.1	1.4	2.2	1.5	2.2	1.5	2.2	1.4	2.2	1.3
	104	40.0	1.8	1.3	1.8	1.4	1.9	1.3	2.0	1.4	2.0	1.4	2.0	1.3	2.0	1.3
	113	45.0	1.7	1.3	1.7	1.3	1.8	1.3	1.8	1.4	1.8	1.3	1.8	1.3	1.8	1.2
25 (2.8)	50	10.0	2.5	1.8	2.6	1.8	2.7	1.8	2.8	1.9	2.8	1.9	2.8	1.8	2.8	1.7
	68	20.0	2.5	1.8	2.6	1.8	2.7	1.8	2.8	1.9	2.8	1.9	2.8	1.8	2.8	1.7
	86	30.0	2.5	1.8	2.6	1.8	2.7	1.8	2.8	1.9	2.8	1.9	2.8	1.8	2.8	1.7
	104	40.0	2.2	1.7	2.3	1.7	2.4	1.7	2.5	1.8	2.5	1.7	2.5	1.6	2.5	1.6
	113	45.0	2.1	1.6	2.2	1.6	2.3	1.6	2.3	1.7	2.3	1.7	2.3	1.6	2.3	1.5
32 (3.6)	50	10.0	3.2	2.5	3.3	2.6	3.5	2.6	3.6	2.7	3.6	2.7	3.6	2.6	3.6	2.4
	68	20.0	3.2	2.5	3.3	2.6	3.5	2.6	3.6	2.7	3.6	2.7	3.6	2.6	3.6	2.4
	86	30.0	3.2	2.5	3.3	2.6	3.5	2.6	3.6	2.7	3.6	2.7	3.6	2.6	3.6	2.4
	104	40.0	2.9	2.4	3.0	2.4	3.1	2.4	3.2	2.6	3.2	2.5	3.2	2.4	3.2	2.3
	113	45.0	2.7	2.3	2.8	2.4	2.9	2.3	3.0	2.5	3.0	2.4	3.0	2.3	3.0	2.2
40 (4.5)	50	10.0	4.1	3.1	4.2	3.2	4.4	3.1	4.5	3.3	4.5	3.2	4.5	3.1	4.5	3.0
	68	20.0	4.1	3.1	4.2	3.2	4.4	3.1	4.5	3.3	4.5	3.2	4.5	3.1	4.5	3.0
	86	30.0	4.1	3.1	4.2	3.2	4.4	3.1	4.5	3.3	4.5	3.2	4.5	3.1	4.5	3.0
	104	40.0	3.6	2.9	3.7	3.0	3.9	2.9	4.0	3.1	4.0	3.0	4.0	2.9	4.0	2.8
	113	45.0	3.4	2.8	3.5	2.9	3.7	2.8	3.8	3.0	3.8	2.9	3.8	2.8	3.8	2.7
50 (5.6)	50	10.0	5.0	3.6	5.2	3.7	5.5	3.7	5.6	3.9	5.6	3.8	5.6	3.6	5.6	3.4
	68	20.0	5.0	3.6	5.2	3.7	5.5	3.7	5.6	3.9	5.6	3.8	5.6	3.6	5.6	3.4
	86	30.0	5.0	3.6	5.2	3.7	5.5	3.7	5.6	3.9	5.6	3.8	5.6	3.6	5.6	3.4
	104	40.0	4.5	3.4	4.6	3.4	4.9	3.4	5.0	3.6	5.0	3.5	5.0	3.3	5.0	3.2
	113	45.0	4.2	3.2	4.3	3.3	4.6	3.3	4.7	3.5	4.7	3.4	4.7	3.2	4.7	3.1
63 (7.1)	50	10.0	6.4	5.0	6.6	5.2	6.9	5.1	7.1	5.4	7.1	5.3	7.1	5.1	7.1	4.9
	68	20.0	6.4	5.0	6.6	5.2	6.9	5.1	7.1	5.4	7.1	5.3	7.1	5.1	7.1	4.9
	86	30.0	6.4	5.0	6.6	5.2	6.9	5.1	7.1	5.4	7.1	5.3	7.1	5.1	7.1	4.9
	104	40.0	5.7	4.7	5.8	4.8	6.2	4.8	6.3	5.1	6.3	5.0	6.3	4.8	6.3	4.6
	113	45.0	5.3	4.5	5.5	4.7	5.8	4.6	5.9	4.9	5.9	4.8	5.9	4.7	5.9	4.5
100 (11.2)	50	10.0	10.1	7.3	10.4	7.5	10.9	7.4	11.2	7.8	11.2	7.6	11.2	7.3	11.2	6.9
	68	20.0	10.1	7.3	10.4	7.5	10.9	7.4	11.2	7.8	11.2	7.6	11.2	7.3	11.2	6.9
	86	30.0	10.1	7.3	10.4	7.5	10.9	7.4	11.2	7.8	11.2	7.6	11.2	7.3	11.2	6.9
	104	40.0	9.0	6.8	9.2	7.0	9.7	6.9	10.0	7.3	10.0	7.1	10.0	6.8	10.0	6.5
	113	45.0	8.4	6.5	8.7	6.7	9.1	6.6	9.4	7.0	9.4	6.9	9.4	6.6	9.4	6.3

kcal/h = kW x 860, Btu/h = kW x 3,412

CT

H8. Cooling capacity with PUMY-P100,125,140YHMB,VHMB

PKFY-P-VBM-E,VHM-E,VKM-E

CA : Capacity(kW) SHC : Sensible Heat Capacity(kW)

Model size (Rated kW)	Outdoor air temp.		Indoor air temp.													
			71 ˚FDB / 59˚FWB		73˚FDB / 61˚FWB		77˚FDB / 64˚FWB		81˚FDB / 66˚FWB		82˚FDB / 68˚FWB		86˚FDB / 72˚FWB		90˚FDB / 75˚FWB	
			21.5˚CDB / 15˚CWB		23˚CDB / 16˚CWB		25˚CDB / 18˚CWB		27˚CDB / 19˚CWB		28˚CDB / 20˚CWB		30˚CDB / 22˚CWB		32˚CDB / 24˚CWB	
	˚FDB	˚CDB	CA	SHC	CA	SHC	CA	SHC	CA	SHC	CA	SHC	CA	SHC	CA	SHC
15 (1.7)	68	20.0	1.6	1.2	1.7	1.2	1.8	1.2	1.8	1.3	1.9	1.2	2.0	1.2	2.1	1.2
	73	22.5	1.6	1.1	1.7	1.2	1.8	1.2	1.8	1.2	1.9	1.2	2.0	1.2	2.1	1.2
	77	25.0	1.6	1.1	1.6	1.2	1.7	1.2	1.8	1.2	1.8	1.2	2.0	1.2	2.0	1.2
	82	27.5	1.5	1.1	1.6	1.2	1.7	1.2	1.8	1.2	1.8	1.2	1.9	1.2	2.0	1.2
	86	30.0	1.5	1.1	1.6	1.2	1.7	1.2	1.7	1.2	1.8	1.2	1.9	1.2	2.0	1.2
	91	32.5	1.5	1.1	1.6	1.2	1.7	1.1	1.7	1.2	1.8	1.2	1.9	1.2	2.0	1.2
	95	35.0	1.5	1.1	1.6	1.1	1.7	1.1	1.7	1.2	1.8	1.2	1.9	1.2	2.0	1.2
	100	37.5	1.4	1.1	1.5	1.1	1.6	1.1	1.7	1.2	1.7	1.2	1.8	1.2	1.9	1.1
	104	40.0	1.4	1.1	1.5	1.1	1.6	1.1	1.7	1.2	1.7	1.2	1.8	1.2	1.9	1.1
	110	43.0	1.4	1.0	1.5	1.1	1.6	1.1	1.6	1.2	1.7	1.2	1.8	1.1	1.9	1.1
20 (2.2)	68	20.0	2.1	1.5	2.2	1.5	2.3	1.5	2.4	1.6	2.4	1.6	2.6	1.6	2.7	1.5
	73	22.5	2.0	1.5	2.1	1.5	2.3	1.5	2.3	1.6	2.4	1.6	2.6	1.6	2.7	1.5
	77	25.0	2.0	1.5	2.1	1.5	2.2	1.5	2.3	1.6	2.4	1.6	2.5	1.5	2.6	1.5
	82	27.5	2.0	1.4	2.1	1.5	2.2	1.5	2.3	1.6	2.4	1.6	2.5	1.5	2.6	1.5
	86	30.0	2.0	1.4	2.1	1.5	2.2	1.5	2.3	1.5	2.3	1.5	2.5	1.5	2.6	1.5
	91	32.5	1.9	1.4	2.0	1.5	2.2	1.5	2.2	1.5	2.3	1.5	2.4	1.5	2.6	1.5
	95	35.0	1.9	1.4	2.0	1.5	2.1	1.4	2.2	1.5	2.3	1.5	2.4	1.5	2.5	1.5
	100	37.5	1.9	1.4	2.0	1.4	2.1	1.4	2.2	1.5	2.2	1.5	2.4	1.5	2.5	1.5
	104	40.0	1.8	1.4	1.9	1.4	2.1	1.4	2.1	1.5	2.2	1.5	2.4	1.5	2.5	1.4
	110	43.0	1.8	1.3	1.9	1.4	2.1	1.4	2.1	1.5	2.2	1.5	2.3	1.5	2.4	1.4
25 (2.8)	68	20.0	2.6	1.9	2.8	1.9	2.9	1.9	3.0	2.0	3.1	2.0	3.3	2.0	3.4	1.9
	73	22.5	2.6	1.8	2.7	1.9	2.9	1.9	3.0	2.0	3.1	2.0	3.2	1.9	3.4	1.9
	77	25.0	2.6	1.8	2.7	1.9	2.9	1.9	2.9	2.0	3.0	2.0	3.2	1.9	3.4	1.9
	82	27.5	2.5	1.8	2.7	1.9	2.8	1.9	2.9	2.0	3.0	1.9	3.2	1.9	3.3	1.9
	86	30.0	2.5	1.8	2.6	1.9	2.8	1.8	2.9	1.9	3.0	1.9	3.2	1.9	3.3	1.9
	91	32.5	2.5	1.8	2.6	1.8	2.8	1.8	2.8	1.9	2.9	1.9	3.1	1.9	3.3	1.8
	95	35.0	2.4	1.8	2.6	1.8	2.7	1.8	2.8	1.9	2.9	1.9	3.1	1.9	3.2	1.8
	100	37.5	2.4	1.7	2.5	1.8	2.7	1.8	2.8	1.9	2.8	1.9	3.0	1.9	3.2	1.8
	104	40.0	2.3	1.7	2.5	1.8	2.7	1.8	2.7	1.9	2.8	1.9	3.0	1.8	3.2	1.8
	110	43.0	2.3	1.7	2.4	1.8	2.6	1.8	2.7	1.9	2.7	1.8	3.0	1.8	3.1	1.8
32 (3.6)	68	20.0	3.4	2.6	3.6	2.7	3.7	2.7	3.9	2.8	4.0	2.8	4.2	2.8	4.4	2.7
	73	22.5	3.3	2.6	3.5	2.7	3.7	2.7	3.8	2.8	4.0	2.8	4.2	2.8	4.4	2.7
	77	25.0	3.3	2.6	3.5	2.7	3.7	2.6	3.8	2.8	3.9	2.8	4.1	2.8	4.3	2.7
	82	27.5	3.3	2.5	3.4	2.7	3.6	2.6	3.7	2.8	3.9	2.8	4.1	2.7	4.3	2.7
	86	30.0	3.2	2.5	3.4	2.6	3.6	2.6	3.7	2.8	3.8	2.8	4.1	2.7	4.2	2.7
	91	32.5	3.2	2.5	3.3	2.6	3.6	2.6	3.7	2.7	3.8	2.7	4.0	2.7	4.2	2.6
	95	35.0	3.1	2.5	3.3	2.6	3.5	2.6	3.6	2.7	3.7	2.7	4.0	2.7	4.2	2.6
	100	37.5	3.1	2.4	3.2	2.6	3.5	2.6	3.6	2.7	3.7	2.7	3.9	2.7	4.1	2.6
	104	40.0	3.0	2.4	3.2	2.5	3.4	2.5	3.5	2.7	3.6	2.7	3.9	2.6	4.1	2.6
	110	43.0	2.9	2.4	3.1	2.5	3.4	2.5	3.4	2.7	3.5	2.6	3.8	2.6	4.0	2.6
40 (4.5)	68	20.0	4.2	3.2	4.4	3.3	4.7	3.3	4.8	3.5	5.0	3.4	5.3	3.4	5.5	3.3
	73	22.5	4.2	3.2	4.4	3.3	4.6	3.2	4.8	3.4	4.9	3.4	5.2	3.4	5.5	3.3
	77	25.0	4.1	3.1	4.3	3.3	4.6	3.2	4.7	3.4	4.9	3.4	5.2	3.3	5.4	3.3
	82	27.5	4.1	3.1	4.3	3.2	4.5	3.2	4.7	3.4	4.8	3.4	5.1	3.3	5.4	3.3
	86	30.0	4.0	3.1	4.2	3.2	4.5	3.2	4.6	3.4	4.8	3.3	5.1	3.3	5.3	3.2
	91	32.5	4.0	3.0	4.2	3.2	4.4	3.2	4.6	3.3	4.7	3.3	5.0	3.3	5.3	3.2
	95	35.0	3.9	3.0	4.1	3.1	4.4	3.1	4.5	3.3	4.6	3.3	4.9	3.3	5.2	3.2
	100	37.5	3.8	3.0	4.0	3.1	4.3	3.1	4.5	3.3	4.6	3.3	4.9	3.2	5.1	3.2
	104	40.0	3.8	2.9	4.0	3.1	4.3	3.1	4.4	3.3	4.5	3.2	4.8	3.2	5.1	3.1
	110	43.0	3.7	2.9	3.9	3.0	4.2	3.0	4.3	3.2	4.4	3.2	4.8	3.2	5.0	3.1
50 (5.6)	68	20.0	5.3	3.8	5.5	3.9	5.8	3.8	6.0	4.1	6.2	4.0	6.6	4.0	6.9	3.9
	73	22.5	5.2	3.7	5.5	3.9	5.8	3.8	6.0	4.0	6.1	4.0	6.5	3.9	6.8	3.9
	77	25.0	5.2	3.7	5.4	3.8	5.7	3.8	5.9	4.0	6.1	4.0	6.4	3.9	6.7	3.8
	82	27.5	5.1	3.7	5.3	3.8	5.7	3.8	5.8	4.0	6.0	3.9	6.4	3.9	6.7	3.8
	86	30.0	5.0	3.6	5.3	3.8	5.6	3.7	5.8	3.9	5.9	3.9	6.3	3.9	6.6	3.8
	91	32.5	4.9	3.6	5.2	3.7	5.5	3.7	5.7	3.9	5.9	3.9	6.2	3.8	6.5	3.8
	95	35.0	4.9	3.5	5.1	3.7	5.5	3.7	5.6	3.9	5.8	3.8	6.2	3.8	6.5	3.7
	100	37.5	4.8	3.5	5.0	3.7	5.4	3.6	5.5	3.8	5.7	3.8	6.1	3.8	6.4	3.7
	104	40.0	4.7	3.5	4.9	3.6	5.3	3.6	5.5	3.8	5.6	3.8	6.0	3.7	6.3	3.7
	110	43.0	4.6	3.4	4.8	3.6	5.2	3.6	5.4	3.8	5.5	3.7	5.9	3.7	6.2	3.6

kcal/h = kW x 860, Btu/h = kW x 3,412

H8. Cooling capacity with PUMY-P100,125,140YHMB,VHMB

PKFY-P-VBM-E,VHM-E,VKM-E

CA : Capacity(kW) SHC : Sensible Heat Capacity(kW)

Model size (Rated kW)	Outdoor air temp.		Indoor air temp.													
			71 ˚FDB / 59˚FWB		73˚FDB / 61˚FWB		77˚FDB / 64˚FWB		81˚FDB / 66˚FWB		82˚FDB / 68˚FWB		86˚FDB / 72˚FWB		90˚FDB / 75˚FWB	
			21.5˚CDB / 15˚CWB		23˚CDB / 16˚CWB		25˚CDB / 18˚CWB		27˚CDB / 19˚CWB		28˚CDB / 20˚CWB		30˚CDB / 22˚CWB		32˚CDB / 24˚CWB	
	˚FDB	˚CDB	CA	SHC	CA	SHC	CA	SHC	CA	SHC	CA	SHC	CA	SHC	CA	SHC
63 (7.1)	68	20.0	6.7	5.2	7.0	5.4	7.4	5.3	7.6	5.6	7.9	5.6	8.3	5.5	8.7	5.4
	73	22.5	6.6	5.1	6.9	5.3	7.3	5.3	7.6	5.6	7.8	5.6	8.2	5.5	8.6	5.4
	77	25.0	6.5	5.1	6.9	5.3	7.2	5.2	7.5	5.6	7.7	5.5	8.2	5.5	8.5	5.4
	82	27.5	6.5	5.1	6.8	5.3	7.2	5.2	7.4	5.5	7.6	5.5	8.1	5.4	8.5	5.3
	86	30.0	6.4	5.0	6.7	5.2	7.1	5.2	7.3	5.5	7.5	5.5	8.0	5.4	8.4	5.3
	91	32.5	6.3	5.0	6.6	5.2	7.0	5.1	7.2	5.5	7.4	5.4	7.9	5.4	8.3	5.3
	95	35.0	6.2	4.9	6.5	5.1	6.9	5.1	7.1	5.4	7.3	5.4	7.8	5.3	8.2	5.2
	100	37.5	6.1	4.9	6.4	5.1	6.8	5.1	7.0	5.4	7.2	5.3	7.7	5.3	8.1	5.2
	104	40.0	5.9	4.8	6.3	5.0	6.8	5.0	6.9	5.3	7.1	5.3	7.6	5.3	8.0	5.2
	110	43.0	5.8	4.7	6.1	5.0	6.6	5.0	6.8	5.3	6.9	5.2	7.5	5.2	7.9	5.1
100 (11.2)	68	20.0	10.5	7.6	11.1	7.9	11.7	7.8	12.0	8.2	12.4	8.2	13.1	8.0	13.7	7.8
	73	22.5	10.4	7.5	10.9	7.8	11.6	7.7	11.9	8.1	12.3	8.1	13.0	8.0	13.6	7.8
	77	25.0	10.3	7.5	10.8	7.8	11.4	7.7	11.8	8.1	12.2	8.0	12.9	7.9	13.5	7.7
	82	27.5	10.2	7.4	10.7	7.7	11.3	7.6	11.7	8.0	12.0	8.0	12.7	7.9	13.4	7.7
	86	30.0	10.0	7.3	10.5	7.6	11.2	7.6	11.5	8.0	11.9	7.9	12.6	7.8	13.2	7.6
	91	32.5	9.9	7.2	10.4	7.6	11.1	7.5	11.4	7.9	11.7	7.8	12.5	7.8	13.1	7.6
	95	35.0	9.7	7.2	10.2	7.5	10.9	7.4	11.2	7.8	11.5	7.8	12.3	7.7	12.9	7.5
	100	37.5	9.5	7.1	10.1	7.4	10.8	7.4	11.1	7.8	11.4	7.7	12.2	7.6	12.8	7.5
	104	40.0	9.4	7.0	9.9	7.3	10.7	7.3	10.9	7.7	11.2	7.6	12.0	7.6	12.6	7.4
	110	43.0	9.1	6.9	9.7	7.2	10.5	7.2	10.7	7.6	11.0	7.5	11.8	7.5	12.4	7.4

kcal/h = kW x 860, Btu/h = kW x 3,412

CT

I1. Cooling capacity with PUHY-P200, 250YHM/PUHY-EP200, 250YHM PURY-P200, 250YHM/PURY-EP200, 250YHM

PFFY-P-VKM-E

CA : Capacity(kW) SHC : Sensible Heat Capacity(kW)

Model size (Rated kW)	Outdoor air temp.		Indoor air temp.													
			71 ˚FDB / 59˚FWB		73˚FDB / 61˚FWB		77˚FDB / 64˚FWB		81˚FDB / 66˚FWB		82˚FDB / 68˚FWB		86˚FDB / 72˚FWB		90˚FDB / 75˚FWB	
			21.5˚CDB / 15˚CWB		23˚CDB / 16˚CWB		25˚CDB / 18˚CWB		27˚CDB / 19˚CWB		28˚CDB / 20˚CWB		30˚CDB / 22˚CWB		32˚CDB / 24˚CWB	
	˚FDB	˚CDB	CA	SHC	CA	SHC	CA	SHC	CA	SHC	CA	SHC	CA	SHC	CA	SHC
20 (2.2)	68	20.0	2.1	1.7	2.2	1.7	2.3	1.7	2.4	1.8	2.5	1.8	2.6	1.8	2.8	1.8
	73	22.5	2.1	1.7	2.2	1.7	2.3	1.7	2.4	1.8	2.5	1.8	2.6	1.8	2.8	1.8
	77	25.0	2.1	1.7	2.2	1.7	2.3	1.7	2.4	1.8	2.4	1.8	2.6	1.8	2.7	1.8
	82	27.5	2.1	1.7	2.1	1.7	2.3	1.7	2.3	1.7	2.4	1.8	2.5	1.8	2.7	1.7
	86	30.0	2.0	1.7	2.1	1.7	2.2	1.7	2.3	1.7	2.3	1.8	2.5	1.8	2.6	1.7
	91	32.5	2.0	1.6	2.1	1.7	2.2	1.7	2.2	1.7	2.3	1.8	2.4	1.7	2.6	1.7
	95	35.0	2.0	1.6	2.0	1.7	2.1	1.7	2.2	1.7	2.3	1.7	2.4	1.7	2.5	1.7
	100	37.5	1.9	1.6	2.0	1.6	2.1	1.6	2.1	1.7	2.2	1.7	2.3	1.7	2.5	1.7
	104	40.0	1.9	1.6	1.9	1.6	2.1	1.6	2.1	1.6	2.2	1.7	2.3	1.7	2.4	1.7
	110	43.0	1.8	1.6	1.9	1.6	2.0	1.6	2.0	1.6	2.1	1.7	2.2	1.7	2.4	1.6
25 (2.8)	68	20.0	2.7	2.0	2.8	2.1	2.9	2.0	3.0	2.1	3.1	2.1	3.3	2.1	3.5	2.1
	73	22.5	2.7	2.0	2.8	2.1	2.9	2.0	3.0	2.1	3.1	2.1	3.3	2.1	3.5	2.1
	77	25.0	2.7	2.0	2.8	2.1	2.9	2.0	3.0	2.1	3.1	2.1	3.3	2.1	3.5	2.1
	82	27.5	2.6	2.0	2.7	2.0	2.9	2.0	3.0	2.0	3.1	2.1	3.2	2.1	3.4	2.1
	86	30.0	2.6	2.0	2.7	2.0	2.8	2.0	2.9	2.0	3.0	2.1	3.1	2.1	3.3	2.0
	91	32.5	2.5	1.9	2.6	2.0	2.8	2.0	2.8	2.0	2.9	2.1	3.1	2.0	3.3	2.0
	95	35.0	2.5	1.9	2.6	2.0	2.7	1.9	2.8	2.0	2.9	2.0	3.0	2.0	3.2	2.0
	100	37.5	2.5	1.9	2.5	1.9	2.7	1.9	2.7	1.9	2.8	2.0	3.0	2.0	3.1	2.0
	104	40.0	2.4	1.9	2.5	1.9	2.6	1.9	2.7	1.9	2.8	2.0	2.9	2.0	3.1	1.9
	110	43.0	2.4	1.8	2.4	1.9	2.6	1.9	2.6	1.9	2.7	2.0	2.8	1.9	3.0	1.9
32 (3.6)	68	20.0	3.4	2.4	3.5	2.5	3.8	2.5	3.9	2.5	4.0	2.6	4.2	2.6	4.6	2.5
	73	22.5	3.4	2.4	3.5	2.5	3.8	2.5	3.9	2.5	4.0	2.6	4.2	2.6	4.6	2.5
	77	25.0	3.4	2.4	3.5	2.5	3.8	2.5	3.9	2.5	4.0	2.6	4.2	2.5	4.5	2.5
	82	27.5	3.4	2.4	3.5	2.5	3.7	2.4	3.8	2.5	3.9	2.6	4.1	2.5	4.4	2.5
	86	30.0	3.3	2.4	3.4	2.4	3.6	2.4	3.7	2.4	3.8	2.5	4.0	2.5	4.3	2.4
	91	32.5	3.3	2.3	3.4	2.4	3.6	2.4	3.7	2.4	3.8	2.5	4.0	2.4	4.2	2.4
	95	35.0	3.2	2.3	3.3	2.4	3.5	2.4	3.6	2.4	3.7	2.5	3.9	2.4	4.1	2.4
	100	37.5	3.2	2.3	3.2	2.3	3.4	2.3	3.5	2.3	3.6	2.4	3.8	2.4	4.0	2.3
	104	40.0	3.1	2.3	3.2	2.3	3.4	2.3	3.5	2.3	3.6	2.4	3.7	2.3	4.0	2.3
	110	43.0	3.0	2.2	3.1	2.3	3.3	2.3	3.3	2.3	3.5	2.4	3.6	2.3	3.9	2.3
40 (4.5)	68	20.0	4.3	3.0	4.4	3.1	4.7	3.1	4.9	3.1	5.0	3.2	5.3	3.2	5.7	3.1
	73	22.5	4.3	3.0	4.4	3.1	4.7	3.1	4.9	3.1	5.0	3.2	5.3	3.2	5.7	3.1
	77	25.0	4.3	3.0	4.4	3.1	4.7	3.1	4.9	3.1	5.0	3.2	5.3	3.1	5.6	3.1
	82	27.5	4.3	3.0	4.4	3.1	4.6	3.0	4.8	3.0	4.9	3.1	5.2	3.1	5.5	3.0
	86	30.0	4.2	2.9	4.3	3.0	4.6	3.0	4.7	3.0	4.8	3.1	5.0	3.0	5.4	3.0
	91	32.5	4.1	2.9	4.2	3.0	4.5	2.9	4.6	3.0	4.7	3.1	5.0	3.0	5.3	3.0
	95	35.0	4.0	2.9	4.1	2.9	4.4	2.9	4.5	2.9	4.6	3.0	4.9	3.0	5.2	2.9
	100	37.5	3.9	2.8	4.1	2.9	4.3	2.9	4.4	2.9	4.5	3.0	4.8	2.9	5.0	2.9
	104	40.0	3.9	2.8	4.0	2.9	4.2	2.8	4.3	2.8	4.5	2.9	4.7	2.9	5.0	2.8
	110	43.0	3.8	2.7	3.9	2.8	4.1	2.8	4.2	2.8	4.3	2.9	4.5	2.8	4.8	2.8

kcal/h = kW x 860, Btu/h = kW x 3,412

I1. Cooling capacity with PUHY-P200, 250YHM/PUHY-EP200, 250YHM PURY-P200, 250YHM/PURY-EP200, 250YHM

PFFY-P-VLEM-E,VLRM-E

CA : Capacity(kW) SHC : Sensible Heat Capacity(kW)

Model size (Rated kW)	Outdoor air temp.		Indoor air temp.													
			71 ˚FDB / 59˚FWB		73˚FDB / 61˚FWB		77˚FDB / 64˚FWB		81˚FDB / 66˚FWB		82˚FDB / 68˚FWB		86˚FDB / 72˚FWB		90˚FDB / 75˚FWB	
			21.5˚CDB / 15˚CWB		23˚CDB / 16˚CWB		25˚CDB / 18˚CWB		27˚CDB / 19˚CWB		28˚CDB / 20˚CWB		30˚CDB / 22˚CWB		32˚CDB / 24˚CWB	
	˚FDB	˚CDB	CA	SHC	CA	SHC	CA	SHC	CA	SHC	CA	SHC	CA	SHC	CA	SHC
20 (2.2)	68	20.0	2.1	1.9	2.2	2.0	2.3	1.9	2.4	2.0	2.5	2.1	2.6	2.0	2.8	2.0
	73	22.5	2.1	1.9	2.2	2.0	2.3	1.9	2.4	2.0	2.5	2.1	2.6	2.0	2.8	2.0
	77	25.0	2.1	1.9	2.2	2.0	2.3	1.9	2.4	2.0	2.4	2.1	2.6	2.0	2.7	2.0
	82	27.5	2.1	1.9	2.1	1.9	2.3	1.9	2.3	2.0	2.4	2.1	2.5	2.0	2.7	2.0
	86	30.0	2.0	1.9	2.1	1.9	2.2	1.9	2.3	2.0	2.3	2.0	2.5	2.0	2.6	2.0
	91	32.5	2.0	1.8	2.1	1.9	2.2	1.9	2.2	1.9	2.3	2.0	2.4	2.0	2.6	2.0
	95	35.0	2.0	1.8	2.0	1.9	2.1	1.9	2.2	1.9	2.3	2.0	2.4	2.0	2.5	1.9
	100	37.5	1.9	1.8	2.0	1.9	2.1	1.9	2.1	1.9	2.2	2.0	2.3	2.0	2.5	1.9
	104	40.0	1.9	1.8	1.9	1.9	2.1	1.8	2.1	1.9	2.2	2.0	2.3	1.9	2.4	1.9
	110	43.0	1.8	1.8	1.9	1.8	2.0	1.8	2.0	1.9	2.1	1.9	2.2	1.9	2.4	1.9
25 (2.8)	68	20.0	2.7	2.1	2.8	2.2	2.9	2.2	3.0	2.2	3.1	2.3	3.3	2.3	3.5	2.3
	73	22.5	2.7	2.1	2.8	2.2	2.9	2.2	3.0	2.2	3.1	2.3	3.3	2.3	3.5	2.3
	77	25.0	2.7	2.1	2.8	2.2	2.9	2.2	3.0	2.2	3.1	2.3	3.3	2.3	3.5	2.3
	82	27.5	2.6	2.1	2.7	2.2	2.9	2.2	3.0	2.2	3.1	2.3	3.2	2.3	3.4	2.2
	86	30.0	2.6	2.1	2.7	2.2	2.8	2.2	2.9	2.2	3.0	2.3	3.1	2.2	3.3	2.2
	91	32.5	2.5	2.1	2.6	2.2	2.8	2.1	2.8	2.2	2.9	2.3	3.1	2.2	3.3	2.2
	95	35.0	2.5	2.1	2.6	2.1	2.7	2.1	2.8	2.2	2.9	2.2	3.0	2.2	3.2	2.2
	100	37.5	2.5	2.0	2.5	2.1	2.7	2.1	2.7	2.1	2.8	2.2	3.0	2.2	3.1	2.1
	104	40.0	2.4	2.0	2.5	2.1	2.6	2.1	2.7	2.1	2.8	2.2	2.9	2.2	3.1	2.1
	110	43.0	2.4	2.0	2.4	2.1	2.6	2.0	2.6	2.1	2.7	2.2	2.8	2.1	3.0	2.1
32 (3.6)	68	20.0	3.4	2.5	3.5	2.6	3.8	2.5	3.9	2.6	4.0	2.7	4.2	2.6	4.6	2.6
	73	22.5	3.4	2.5	3.5	2.6	3.8	2.5	3.9	2.6	4.0	2.7	4.2	2.6	4.6	2.6
	77	25.0	3.4	2.5	3.5	2.6	3.8	2.5	3.9	2.6	4.0	2.6	4.2	2.6	4.5	2.6
	82	27.5	3.4	2.5	3.5	2.5	3.7	2.5	3.8	2.5	3.9	2.6	4.1	2.6	4.4	2.5
	86	30.0	3.3	2.4	3.4	2.5	3.6	2.5	3.7	2.5	3.8	2.6	4.0	2.5	4.3	2.5
	91	32.5	3.3	2.4	3.4	2.5	3.6	2.4	3.7	2.5	3.8	2.6	4.0	2.5	4.2	2.5
	95	35.0	3.2	2.4	3.3	2.4	3.5	2.4	3.6	2.4	3.7	2.5	3.9	2.5	4.1	2.4
	100	37.5	3.2	2.3	3.2	2.4	3.4	2.4	3.5	2.4	3.6	2.5	3.8	2.5	4.0	2.4
	104	40.0	3.1	2.3	3.2	2.4	3.4	2.4	3.5	2.4	3.6	2.5	3.7	2.4	4.0	2.4
	110	43.0	3.0	2.3	3.1	2.3	3.3	2.3	3.3	2.3	3.5	2.4	3.6	2.4	3.9	2.3
40 (4.5)	68	20.0	4.3	3.1	4.4	3.2	4.7	3.2	4.9	3.2	5.0	3.3	5.3	3.3	5.7	3.3
	73	22.5	4.3	3.1	4.4	3.2	4.7	3.2	4.9	3.2	5.0	3.3	5.3	3.3	5.7	3.3
	77	25.0	4.3	3.1	4.4	3.2	4.7	3.2	4.9	3.2	5.0	3.3	5.3	3.3	5.6	3.2
	82	27.5	4.3	3.1	4.4	3.2	4.6	3.1	4.8	3.2	4.9	3.3	5.2	3.2	5.5	3.2
	86	30.0	4.2	3.1	4.3	3.1	4.6	3.1	4.7	3.1	4.8	3.3	5.0	3.2	5.4	3.2
	91	32.5	4.1	3.0	4.2	3.1	4.5	3.1	4.6	3.1	4.7	3.2	5.0	3.2	5.3	3.1
	95	35.0	4.0	3.0	4.1	3.1	4.4	3.0	4.5	3.1	4.6	3.2	4.9	3.1	5.2	3.1
	100	37.5	3.9	2.9	4.1	3.0	4.3	3.0	4.4	3.0	4.5	3.1	4.8	3.1	5.0	3.0
	104	40.0	3.9	2.9	4.0	3.0	4.2	3.0	4.3	3.0	4.5	3.1	4.7	3.0	5.0	3.0
	110	43.0	3.8	2.9	3.9	3.0	4.1	2.9	4.2	2.9	4.3	3.1	4.5	3.0	4.8	3.0
50 (5.6)	68	20.0	5.3	3.9	5.5	4.1	5.9	4.0	6.0	4.1	6.2	4.2	6.6	4.2	7.1	4.1
	73	22.5	5.3	3.9	5.5	4.1	5.9	4.0	6.0	4.1	6.2	4.2	6.6	4.2	7.1	4.1
	77	25.0	5.3	3.9	5.5	4.1	5.9	4.0	6.0	4.1	6.2	4.2	6.6	4.2	6.9	4.1
	82	27.5	5.3	3.9	5.5	4.0	5.8	4.0	5.9	4.0	6.1	4.2	6.4	4.1	6.8	4.0
	86	30.0	5.2	3.9	5.3	4.0	5.7	3.9	5.8	4.0	6.0	4.1	6.3	4.0	6.7	4.0
	91	32.5	5.1	3.8	5.3	3.9	5.5	3.9	5.7	3.9	5.9	4.1	6.2	4.0	6.6	3.9
	95	35.0	5.0	3.8	5.2	3.9	5.5	3.8	5.6	3.9	5.7	4.0	6.0	4.0	6.4	3.9
	100	37.5	4.9	3.7	5.0	3.8	5.3	3.8	5.5	3.8	5.6	4.0	5.9	3.9	6.3	3.8
	104	40.0	4.8	3.7	5.0	3.8	5.3	3.8	5.4	3.8	5.5	3.9	5.8	3.9	6.2	3.8
	110	43.0	4.7	3.6	4.8	3.7	5.1	3.7	5.2	3.7	5.4	3.9	5.7	3.8	6.0	3.7
63 (7.1)	68	20.0	6.7	4.9	7.0	5.0	7.5	5.0	7.7	5.0	7.9	5.2	8.4	5.1	9.0	5.1
	73	22.5	6.7	4.9	7.0	5.0	7.5	5.0	7.7	5.0	7.9	5.2	8.4	5.1	9.0	5.1
	77	25.0	6.7	4.9	7.0	5.0	7.5	5.0	7.7	5.0	7.8	5.2	8.3	5.1	8.8	5.0
	82	27.5	6.7	4.9	6.9	5.0	7.3	4.9	7.5	5.0	7.7	5.1	8.1	5.0	8.7	5.0
	86	30.0	6.6	4.8	6.8	4.9	7.2	4.9	7.4	4.9	7.6	5.1	8.0	5.0	8.5	4.9
	91	32.5	6.5	4.7	6.7	4.9	7.0	4.8	7.2	4.8	7.4	5.0	7.8	4.9	8.3	4.9
	95	35.0	6.4	4.7	6.5	4.8	6.9	4.7	7.1	4.8	7.3	5.0	7.7	4.9	8.1	4.8
	100	37.5	6.2	4.6	6.4	4.7	6.8	4.7	6.9	4.7	7.1	4.9	7.5	4.8	8.0	4.7
	104	40.0	6.1	4.5	6.3	4.7	6.7	4.6	6.8	4.7	7.0	4.8	7.3	4.7	7.8	4.7
	110	43.0	6.0	4.5	6.1	4.6	6.5	4.5	6.6	4.6	6.8	4.8	7.2	4.7	7.6	4.6

kcal/h = kW x 860, Btu/h = kW x 3,412

CT

I1. Cooling capacity with PUHY-P200, 250YHM/PUHY-EP200, 250YHM PURY-P200, 250YHM/PURY-EP200, 250YHM

PFFY-P-VLRMM-E

CA : Capacity(kW) SHC : Sensible Heat Capacity(kW)

Model size (Rated kW)	Outdoor air temp.		Indoor air temp.													
			71 ˚FDB / 59˚FWB		73˚FDB / 61˚FWB		77˚FDB / 64˚FWB		81˚FDB / 66˚FWB		82˚FDB / 68˚FWB		86˚FDB / 72˚FWB		90˚FDB / 75˚FWB	
			21.5˚CDB / 15˚CWB		23˚CDB / 16˚CWB		25˚CDB / 18˚CWB		27˚CDB / 19˚CWB		28˚CDB / 20˚CWB		30˚CDB / 22˚CWB		32˚CDB / 24˚CWB	
	˚FDB	˚CDB	CA	SHC	CA	SHC	CA	SHC	CA	SHC	CA	SHC	CA	SHC	CA	SHC
20 (2.2)	68	20.0	2.0	1.6	2.1	1.7	2.3	1.7	2.4	1.8	2.4	1.8	2.6	1.8	2.8	1.8
	73	22.5	2.0	1.6	2.1	1.7	2.3	1.7	2.4	1.8	2.4	1.8	2.6	1.8	2.8	1.8
	77	25.0	2.0	1.6	2.1	1.7	2.3	1.7	2.4	1.8	2.4	1.8	2.6	1.8	2.7	1.7
	82	27.5	2.0	1.6	2.1	1.7	2.2	1.7	2.3	1.8	2.4	1.8	2.5	1.8	2.7	1.7
	86	30.0	1.9	1.6	2.0	1.7	2.2	1.7	2.3	1.8	2.3	1.8	2.5	1.7	2.6	1.7
	91	32.5	1.9	1.6	2.0	1.6	2.1	1.6	2.2	1.8	2.3	1.7	2.4	1.7	2.6	1.7
	95	35.0	1.9	1.6	2.0	1.6	2.1	1.6	2.2	1.7	2.2	1.7	2.4	1.7	2.5	1.7
	100	37.5	1.8	1.5	1.9	1.6	2.0	1.6	2.1	1.7	2.2	1.7	2.3	1.7	2.5	1.7
	104	40.0	1.8	1.5	1.9	1.6	2.0	1.6	2.1	1.7	2.1	1.7	2.3	1.7	2.4	1.6
	110	43.0	1.8	1.5	1.8	1.6	2.0	1.6	2.0	1.7	2.0	1.7	2.2	1.6	2.4	1.6
25 (2.8)	68	20.0	2.5	1.9	2.7	2.0	2.9	2.0	3.0	2.1	3.1	2.1	3.3	2.1	3.5	2.0
	73	22.5	2.5	1.9	2.7	2.0	2.9	2.0	3.0	2.1	3.1	2.1	3.3	2.1	3.5	2.0
	77	25.0	2.5	1.9	2.7	2.0	2.9	2.0	3.0	2.1	3.1	2.1	3.3	2.0	3.5	2.0
	82	27.5	2.5	1.9	2.6	1.9	2.8	1.9	3.0	2.1	3.0	2.0	3.2	2.0	3.4	2.0
	86	30.0	2.5	1.8	2.6	1.9	2.8	1.9	2.9	2.0	3.0	2.0	3.1	2.0	3.3	2.0
	91	32.5	2.4	1.8	2.5	1.9	2.7	1.9	2.8	2.0	2.9	2.0	3.1	2.0	3.3	1.9
	95	35.0	2.4	1.8	2.5	1.9	2.7	1.9	2.8	2.0	2.8	2.0	3.0	1.9	3.2	1.9
	100	37.5	2.4	1.8	2.5	1.9	2.6	1.8	2.7	2.0	2.8	1.9	3.0	1.9	3.1	1.9
	104	40.0	2.3	1.8	2.4	1.8	2.6	1.8	2.7	1.9	2.7	1.9	2.9	1.9	3.1	1.9
	110	43.0	2.3	1.7	2.4	1.8	2.5	1.8	2.6	1.9	2.6	1.9	2.8	1.9	3.0	1.8
32 (3.6)	68	20.0	3.2	2.4	3.4	2.5	3.7	2.5	3.9	2.7	4.0	2.6	4.2	2.6	4.6	2.6
	73	22.5	3.2	2.4	3.4	2.5	3.7	2.5	3.9	2.7	4.0	2.6	4.2	2.6	4.6	2.6
	77	25.0	3.2	2.4	3.4	2.5	3.7	2.5	3.9	2.7	4.0	2.6	4.2	2.6	4.5	2.6
	82	27.5	3.2	2.4	3.4	2.5	3.6	2.5	3.8	2.6	3.9	2.6	4.1	2.6	4.4	2.5
	86	30.0	3.2	2.4	3.3	2.5	3.6	2.4	3.7	2.6	3.8	2.6	4.0	2.5	4.3	2.5
	91	32.5	3.1	2.3	3.3	2.4	3.5	2.4	3.7	2.6	3.7	2.5	4.0	2.5	4.2	2.5
	95	35.0	3.1	2.3	3.2	2.4	3.4	2.4	3.6	2.5	3.7	2.5	3.9	2.5	4.1	2.4
	100	37.5	3.0	2.3	3.2	2.4	3.3	2.3	3.5	2.5	3.6	2.5	3.8	2.5	4.0	2.4
	104	40.0	3.0	2.3	3.1	2.3	3.3	2.3	3.5	2.5	3.5	2.4	3.7	2.4	4.0	2.4
	110	43.0	2.9	2.2	3.0	2.3	3.2	2.3	3.3	2.4	3.3	2.4	3.6	2.4	3.9	2.3
40 (4.5)	68	20.0	4.0	3.0	4.3	3.1	4.6	3.1	4.9	3.4	5.0	3.3	5.3	3.3	5.7	3.3
	73	22.5	4.0	3.0	4.3	3.1	4.6	3.1	4.9	3.4	5.0	3.3	5.3	3.3	5.7	3.3
	77	25.0	4.0	3.0	4.3	3.1	4.6	3.1	4.9	3.4	5.0	3.3	5.3	3.3	5.6	3.2
	82	27.5	4.0	3.0	4.3	3.1	4.5	3.1	4.8	3.3	4.8	3.3	5.2	3.2	5.5	3.2
	86	30.0	4.0	3.0	4.2	3.1	4.5	3.1	4.7	3.3	4.8	3.2	5.0	3.2	5.4	3.2
	91	32.5	3.9	2.9	4.1	3.0	4.4	3.0	4.6	3.2	4.7	3.2	5.0	3.2	5.3	3.1
	95	35.0	3.8	2.9	4.0	3.0	4.3	3.0	4.5	3.2	4.6	3.2	4.9	3.1	5.2	3.1
	100	37.5	3.8	2.9	4.0	3.0	4.2	2.9	4.4	3.2	4.5	3.1	4.8	3.1	5.0	3.0
	104	40.0	3.7	2.8	3.9	2.9	4.1	2.9	4.3	3.1	4.4	3.1	4.7	3.0	5.0	3.0
	110	43.0	3.6	2.8	3.8	2.9	4.0	2.9	4.2	3.1	4.2	3.0	4.5	3.0	4.8	3.0
50 (5.6)	68	20.0	5.0	3.8	5.3	4.0	5.8	4.0	6.0	4.3	6.2	4.2	6.6	4.2	7.1	4.1
	73	22.5	5.0	3.8	5.3	4.0	5.8	4.0	6.0	4.3	6.2	4.2	6.6	4.2	7.1	4.1
	77	25.0	5.0	3.8	5.3	4.0	5.8	4.0	6.0	4.3	6.2	4.2	6.6	4.2	6.9	4.1
	82	27.5	5.0	3.8	5.3	3.9	5.7	3.9	5.9	4.2	6.0	4.1	6.4	4.1	6.8	4.0
	86	30.0	4.9	3.7	5.2	3.9	5.5	3.9	5.8	4.2	5.9	4.1	6.3	4.0	6.7	4.0
	91	32.5	4.8	3.7	5.1	3.9	5.4	3.8	5.7	4.1	5.8	4.0	6.2	4.0	6.6	3.9
	95	35.0	4.8	3.7	5.0	3.8	5.3	3.8	5.6	4.1	5.7	4.0	6.0	4.0	6.4	3.9
	100	37.5	4.7	3.6	4.9	3.8	5.2	3.7	5.5	4.0	5.5	3.9	5.9	3.9	6.3	3.8
	104	40.0	4.6	3.6	4.8	3.7	5.1	3.7	5.4	4.0	5.5	3.9	5.8	3.9	6.2	3.8
	110	43.0	4.5	3.5	4.7	3.7	5.0	3.6	5.2	3.9	5.2	3.8	5.7	3.8	6.0	3.7
63 (7.1)	68	20.0	6.4	4.7	6.8	4.9	7.3	4.9	7.7	5.2	7.8	5.2	8.4	5.1	9.0	5.1
	73	22.5	6.4	4.7	6.8	4.9	7.3	4.9	7.7	5.2	7.8	5.2	8.4	5.1	9.0	5.1
	77	25.0	6.4	4.7	6.8	4.9	7.3	4.9	7.7	5.2	7.8	5.2	8.3	5.1	8.8	5.0
	82	27.5	6.3	4.6	6.7	4.9	7.2	4.9	7.5	5.2	7.6	5.1	8.1	5.0	8.7	5.0
	86	30.0	6.2	4.6	6.6	4.8	7.0	4.8	7.4	5.1	7.5	5.1	8.0	5.0	8.5	4.9
	91	32.5	6.1	4.5	6.5	4.8	6.9	4.7	7.2	5.0	7.3	5.0	7.8	4.9	8.3	4.9
	95	35.0	6.0	4.5	6.4	4.7	6.7	4.7	7.1	5.0	7.2	4.9	7.7	4.9	8.1	4.8
	100	37.5	6.0	4.5	6.2	4.7	6.6	4.6	6.9	4.9	7.0	4.8	7.5	4.8	8.0	4.7
	104	40.0	5.9	4.4	6.1	4.6	6.5	4.5	6.8	4.9	6.9	4.8	7.3	4.7	7.8	4.7
	110	43.0	5.8	4.4	6.0	4.5	6.3	4.5	6.6	4.8	6.6	4.7	7.2	4.7	7.6	4.6

kcal/h = kW x 860, Btu/h = kW x 3,412

I2. Cooling capacity with PUHY-P300-400YHM /PUHY-EP300, 400Y(S)HM PURY-P300-400YHM /PURY-EP300, 400Y(S)HM

PFFY-P-VKM-E

CA : Capacity(kW) SHC : Sensible Heat Capacity(kW)

Model size (Rated kW)	Outdoor air temp.		Indoor air temp.													
			71 ˚FDB / 59˚FWB		73˚FDB / 61˚FWB		77˚FDB / 64˚FWB		81˚FDB / 66˚FWB		82˚FDB / 68˚FWB		86˚FDB / 72˚FWB		90˚FDB / 75˚FWB	
			21.5˚CDB / 15˚CWB		23˚CDB / 16˚CWB		25˚CDB / 18˚CWB		27˚CDB / 19˚CWB		28˚CDB / 20˚CWB		30˚CDB / 22˚CWB		32˚CDB / 24˚CWB	
	˚FDB	˚CDB	CA	SHC	CA	SHC	CA	SHC	CA	SHC	CA	SHC	CA	SHC	CA	SHC
20 (2.2)	68	20.0	2.1	1.7	2.2	1.8	2.4	1.7	2.5	1.8	2.5	1.9	2.7	1.8	2.9	1.8
	73	22.5	2.1	1.7	2.2	1.7	2.3	1.7	2.4	1.8	2.5	1.8	2.6	1.8	2.8	1.8
	77	25.0	2.1	1.7	2.2	1.7	2.3	1.7	2.4	1.8	2.4	1.8	2.6	1.8	2.8	1.8
	82	27.5	2.1	1.7	2.1	1.7	2.3	1.7	2.3	1.7	2.4	1.8	2.5	1.8	2.7	1.8
	86	30.0	2.0	1.6	2.1	1.7	2.2	1.7	2.3	1.7	2.4	1.8	2.5	1.8	2.6	1.7
	91	32.5	2.0	1.6	2.0	1.7	2.2	1.7	2.2	1.7	2.3	1.8	2.4	1.7	2.6	1.7
	95	35.0	2.0	1.6	2.0	1.7	2.1	1.6	2.2	1.7	2.3	1.7	2.4	1.7	2.5	1.7
	100	37.5	1.9	1.6	1.9	1.6	2.1	1.6	2.1	1.7	2.2	1.7	2.4	1.7	2.5	1.7
	104	40.0	1.9	1.6	1.9	1.6	2.0	1.6	2.1	1.6	2.4	1.8	2.3	1.7	2.4	1.7
	110	43.0	1.8	1.6	1.8	1.6	2.0	1.6	2.0	1.6	2.1	1.7	2.2	1.7	2.4	1.6
25 (2.8)	68	20.0	2.7	2.0	2.8	2.1	3.0	2.1	3.1	2.1	3.2	2.2	3.4	2.2	3.6	2.1
	73	22.5	2.7	2.0	2.8	2.1	3.0	2.1	3.1	2.1	3.2	2.2	3.4	2.1	3.6	2.1
	77	25.0	2.7	2.0	2.7	2.0	2.9	2.0	3.0	2.1	3.1	2.1	3.3	2.1	3.5	2.1
	82	27.5	2.6	2.0	2.7	2.0	2.9	2.0	3.0	2.0	3.1	2.1	3.2	2.1	3.4	2.1
	86	30.0	2.6	1.9	2.6	2.0	2.8	2.0	2.9	2.0	3.0	2.1	3.2	2.1	3.4	2.0
	91	32.5	2.5	1.9	2.6	2.0	2.8	2.0	2.9	2.0	2.9	2.1	3.1	2.0	3.3	2.0
	95	35.0	2.5	1.9	2.5	1.9	2.7	1.9	2.8	2.0	2.9	2.0	3.1	2.0	3.2	2.0
	100	37.5	2.5	1.9	2.5	1.9	2.6	1.9	2.7	1.9	2.8	2.0	3.0	2.0	3.2	2.0
	104	40.0	2.4	1.9	2.4	1.9	2.6	1.9	2.7	1.9	3.0	2.1	2.9	2.0	3.1	1.9
	110	43.0	2.4	1.8	2.4	1.9	2.5	1.9	2.6	1.9	2.7	2.0	2.8	1.9	3.0	1.9
32 (3.6)	68	20.0	3.5	2.5	3.6	2.5	3.9	2.5	4.0	2.6	4.2	2.7	4.4	2.6	4.7	2.6
	73	22.5	3.5	2.5	3.6	2.5	3.8	2.5	4.0	2.5	4.1	2.6	4.3	2.6	4.6	2.5
	77	25.0	3.4	2.4	3.5	2.5	3.8	2.5	3.9	2.5	4.0	2.6	4.2	2.6	4.5	2.5
	82	27.5	3.4	2.4	3.5	2.5	3.7	2.4	3.8	2.5	3.9	2.6	4.2	2.5	4.4	2.5
	86	30.0	3.3	2.4	3.4	2.4	3.6	2.4	3.7	2.4	3.9	2.5	4.1	2.5	4.3	2.4
	91	32.5	3.3	2.3	3.3	2.4	3.5	2.4	3.7	2.4	3.8	2.5	4.0	2.5	4.2	2.4
	95	35.0	3.2	2.3	3.3	2.4	3.5	2.3	3.6	2.4	3.7	2.5	3.9	2.4	4.2	2.4
	100	37.5	3.2	2.3	3.2	2.3	3.4	2.3	3.5	2.3	3.6	2.4	3.9	2.4	4.1	2.4
	104	40.0	3.1	2.3	3.1	2.3	3.3	2.3	3.4	2.3	3.9	2.5	3.8	2.4	4.0	2.3
	110	43.0	3.0	2.2	3.0	2.2	3.2	2.2	3.3	2.3	3.4	2.3	3.7	2.3	3.9	2.3
40 (4.5)	68	20.0	4.4	3.0	4.5	3.1	4.9	3.1	5.0	3.2	5.2	3.3	5.5	3.2	5.9	3.2
	73	22.5	4.3	3.0	4.5	3.1	4.8	3.1	5.0	3.1	5.1	3.2	5.4	3.2	5.7	3.1
	77	25.0	4.3	3.0	4.4	3.1	4.7	3.1	4.9	3.1	5.0	3.2	5.3	3.2	5.6	3.1
	82	27.5	4.2	3.0	4.3	3.0	4.6	3.0	4.8	3.0	4.9	3.2	5.2	3.1	5.5	3.1
	86	30.0	4.1	2.9	4.2	3.0	4.5	3.0	4.7	3.0	4.8	3.1	5.1	3.1	5.4	3.0
	91	32.5	4.1	2.9	4.2	2.9	4.4	2.9	4.6	3.0	4.7	3.1	5.0	3.0	5.3	3.0
	95	35.0	4.0	2.9	4.1	2.9	4.3	2.9	4.5	2.9	4.6	3.0	4.9	3.0	5.2	2.9
	100	37.5	4.0	2.8	4.0	2.9	4.3	2.8	4.4	2.9	4.5	3.0	4.8	2.9	5.1	2.9
	104	40.0	3.9	2.8	3.9	2.8	4.2	2.8	4.3	2.8	4.9	3.1	4.7	2.9	5.0	2.8
	110	43.0	3.8	2.7	3.8	2.8	4.1	2.7	4.2	2.8	4.3	2.9	4.6	2.8	4.8	2.8

kcal/h = kW x 860, Btu/h = kW x 3,412

CT

I2. Cooling capacity with PUHY-P300-400YHM /PUHY-EP300, 400Y(S)HM PURY-P300-400YHM /PURY-EP300, 400Y(S)HM

PFFY-P-VLEM-E,VLRM-E

CA : Capacity(kW) SHC : Sensible Heat Capacity(kW)

Model size (Rated kW)	Outdoor air temp.		Indoor air temp.													
			71 ˚FDB / 59˚FWB		73˚FDB / 61˚FWB		77˚FDB / 64˚FWB		81˚FDB / 66˚FWB		82˚FDB / 68˚FWB		86˚FDB / 72˚FWB		90˚FDB / 75˚FWB	
			21.5˚CDB / 15˚CWB		23˚CDB / 16˚CWB		25˚CDB / 18˚CWB		27˚CDB / 19˚CWB		28˚CDB / 20˚CWB		30˚CDB / 22˚CWB		32˚CDB / 24˚CWB	
	˚FDB	˚CDB	CA	SHC	CA	SHC	CA	SHC	CA	SHC	CA	SHC	CA	SHC	CA	SHC
20 (2.2)	68	20.0	2.1	1.9	2.2	2.0	2.4	2.0	2.5	2.0	2.5	2.1	2.7	2.1	2.9	2.1
	73	22.5	2.1	1.9	2.2	2.0	2.3	2.0	2.4	2.0	2.5	2.1	2.6	2.1	2.8	2.0
	77	25.0	2.1	1.9	2.2	1.9	2.3	1.9	2.4	2.0	2.4	2.1	2.6	2.0	2.8	2.0
	82	27.5	2.1	1.9	2.1	1.9	2.3	1.9	2.3	2.0	2.4	2.1	2.5	2.0	2.7	2.0
	86	30.0	2.0	1.8	2.1	1.9	2.2	1.9	2.3	2.0	2.4	2.0	2.5	2.0	2.6	2.0
	91	32.5	2.0	1.8	2.0	1.9	2.2	1.9	2.2	1.9	2.3	2.0	2.4	2.0	2.6	2.0
	95	35.0	2.0	1.8	2.0	1.9	2.1	1.9	2.2	1.9	2.3	2.0	2.4	2.0	2.5	2.0
	100	37.5	1.9	1.8	1.9	1.9	2.1	1.8	2.1	1.9	2.2	2.0	2.4	2.0	2.5	1.9
	104	40.0	1.9	1.8	1.9	1.8	2.0	1.8	2.1	1.9	2.4	2.0	2.3	1.9	2.4	1.9
	110	43.0	1.8	1.8	1.8	1.8	2.0	1.8	2.0	1.9	2.1	1.9	2.2	1.9	2.4	1.9
25 (2.8)	68	20.0	2.7	2.2	2.8	2.2	3.0	2.2	3.1	2.3	3.2	2.4	3.4	2.3	3.6	2.3
	73	22.5	2.7	2.2	2.8	2.2	3.0	2.2	3.1	2.3	3.2	2.4	3.4	2.3	3.6	2.3
	77	25.0	2.7	2.1	2.7	2.2	2.9	2.2	3.0	2.2	3.1	2.3	3.3	2.3	3.5	2.3
	82	27.5	2.6	2.1	2.7	2.2	2.9	2.2	3.0	2.2	3.1	2.3	3.2	2.3	3.4	2.2
	86	30.0	2.6	2.1	2.6	2.2	2.8	2.1	2.9	2.2	3.0	2.3	3.2	2.3	3.4	2.2
	91	32.5	2.5	2.1	2.6	2.1	2.8	2.1	2.9	2.2	2.9	2.3	3.1	2.2	3.3	2.2
	95	35.0	2.5	2.1	2.5	2.1	2.7	2.1	2.8	2.2	2.9	2.2	3.1	2.2	3.2	2.2
	100	37.5	2.5	2.0	2.5	2.1	2.6	2.1	2.7	2.1	2.8	2.2	3.0	2.2	3.2	2.2
	104	40.0	2.4	2.0	2.4	2.1	2.6	2.1	2.7	2.1	3.0	2.3	2.9	2.2	3.1	2.1
	110	43.0	2.4	2.0	2.4	2.0	2.5	2.0	2.6	2.1	2.7	2.2	2.8	2.1	3.0	2.1
32 (3.6)	68	20.0	3.5	2.5	3.6	2.6	3.9	2.6	4.0	2.6	4.2	2.7	4.4	2.7	4.7	2.7
	73	22.5	3.5	2.5	3.6	2.6	3.8	2.6	4.0	2.6	4.1	2.7	4.3	2.7	4.6	2.6
	77	25.0	3.4	2.5	3.5	2.5	3.8	2.5	3.9	2.6	4.0	2.7	4.2	2.6	4.5	2.6
	82	27.5	3.4	2.5	3.5	2.5	3.7	2.5	3.8	2.5	3.9	2.6	4.2	2.6	4.4	2.5
	86	30.0	3.3	2.4	3.4	2.5	3.6	2.5	3.7	2.5	3.9	2.6	4.1	2.6	4.3	2.5
	91	32.5	3.3	2.4	3.3	2.5	3.5	2.4	3.7	2.5	3.8	2.6	4.0	2.5	4.2	2.5
	95	35.0	3.2	2.4	3.3	2.4	3.5	2.4	3.6	2.4	3.7	2.5	3.9	2.5	4.2	2.5
	100	37.5	3.2	2.4	3.2	2.4	3.4	2.4	3.5	2.4	3.6	2.5	3.9	2.5	4.1	2.4
	104	40.0	3.1	2.3	3.1	2.3	3.3	2.3	3.4	2.4	3.9	2.6	3.8	2.4	4.0	2.4
	110	43.0	3.0	2.3	3.0	2.3	3.2	2.3	3.3	2.3	3.4	2.4	3.7	2.4	3.9	2.4
40 (4.5)	68	20.0	4.4	3.2	4.5	3.3	4.9	3.3	5.0	3.3	5.2	3.4	5.5	3.4	5.9	3.3
	73	22.5	4.3	3.1	4.5	3.2	4.8	3.2	5.0	3.3	5.1	3.4	5.4	3.3	5.7	3.3
	77	25.0	4.3	3.1	4.4	3.2	4.7	3.2	4.9	3.2	5.0	3.3	5.3	3.3	5.6	3.2
	82	27.5	4.2	3.1	4.3	3.2	4.6	3.1	4.8	3.2	4.9	3.3	5.2	3.3	5.5	3.2
	86	30.0	4.1	3.0	4.2	3.1	4.5	3.1	4.7	3.1	4.8	3.3	5.1	3.2	5.4	3.2
	91	32.5	4.1	3.0	4.2	3.1	4.4	3.1	4.6	3.1	4.7	3.2	5.0	3.2	5.3	3.1
	95	35.0	4.0	3.0	4.1	3.0	4.3	3.0	4.5	3.1	4.6	3.2	4.9	3.1	5.2	3.1
	100	37.5	4.0	3.0	4.0	3.0	4.3	3.0	4.4	3.0	4.5	3.1	4.8	3.1	5.1	3.1
	104	40.0	3.9	2.9	3.9	3.0	4.2	2.9	4.3	3.0	4.9	3.3	4.7	3.1	5.0	3.0
	110	43.0	3.8	2.9	3.8	2.9	4.1	2.9	4.2	2.9	4.3	3.0	4.6	3.0	4.8	3.0
50 (5.6)	68	20.0	5.4	4.0	5.6	4.1	6.0	4.1	6.3	4.2	6.5	4.3	6.9	4.3	7.3	4.2
	73	22.5	5.4	4.0	5.6	4.1	6.0	4.1	6.2	4.1	6.4	4.3	6.7	4.2	7.1	4.2
	77	25.0	5.3	3.9	5.5	4.0	5.9	4.0	6.0	4.1	6.2	4.2	6.6	4.2	7.0	4.1
	82	27.5	5.2	3.9	5.4	4.0	5.7	4.0	5.9	4.0	6.1	4.2	6.5	4.1	6.9	4.1
	86	30.0	5.2	3.8	5.3	3.9	5.6	3.9	5.8	4.0	6.0	4.1	6.4	4.1	6.7	4.0
	91	32.5	5.1	3.8	5.2	3.9	5.5	3.9	5.7	3.9	5.9	4.1	6.2	4.0	6.6	4.0
	95	35.0	5.0	3.8	5.1	3.8	5.4	3.8	5.6	3.9	5.8	4.0	6.1	4.0	6.5	3.9
	100	37.5	4.9	3.7	5.0	3.8	5.3	3.8	5.5	3.8	5.7	4.0	6.0	3.9	6.3	3.9
	104	40.0	4.8	3.7	4.8	3.7	5.2	3.7	5.3	3.8	6.1	4.2	5.9	3.9	6.2	3.8
	110	43.0	4.7	3.6	4.7	3.7	5.0	3.7	5.2	3.7	5.3	3.9	5.7	3.8	6.0	3.8
63 (7.1)	68	20.0	6.9	4.9	7.1	5.1	7.7	5.1	8.0	5.2	8.2	5.4	8.7	5.3	9.2	5.2
	73	22.5	6.9	4.9	7.1	5.1	7.6	5.0	7.8	5.1	8.1	5.3	8.5	5.2	9.1	5.1
	77	25.0	6.8	4.9	7.0	5.0	7.4	5.0	7.7	5.0	7.9	5.2	8.4	5.1	8.9	5.1
	82	27.5	6.6	4.8	6.8	4.9	7.3	4.9	7.5	5.0	7.8	5.2	8.2	5.1	8.7	5.0
	86	30.0	6.5	4.8	6.7	4.9	7.1	4.8	7.4	4.9	7.6	5.1	8.1	5.0	8.5	4.9
	91	32.5	6.4	4.7	6.6	4.8	7.0	4.8	7.2	4.9	7.5	5.0	7.9	4.9	8.4	4.9
	95	35.0	6.3	4.7	6.4	4.7	6.8	4.7	7.1	4.8	7.3	5.0	7.7	4.9	8.2	4.8
	100	37.5	6.2	4.6	6.3	4.7	6.7	4.6	6.9	4.7	7.2	4.9	7.6	4.8	8.0	4.8
	104	40.0	6.1	4.6	6.1	4.6	6.6	4.6	6.8	4.7	7.7	5.1	7.4	4.8	7.8	4.7
	110	43.0	6.0	4.5	6.0	4.5	6.4	4.5	6.6	4.6	6.8	4.7	7.2	4.7	7.6	4.6

kcal/h = kW x 860, Btu/h = kW x 3,412

I2. Cooling capacity with PUHY-P300-400YHM /PUHY-EP300, 400Y(S)HM PURY-P300-400YHM /PURY-EP300, 400Y(S)HM

PFFY-P-VLRMM-E

CA : Capacity(kW) SHC : Sensible Heat Capacity(kW)

Model size (Rated kW)	Outdoor air temp.		Indoor air temp.													
			71 ˚FDB / 59˚FWB		73˚FDB / 61˚FWB		77˚FDB / 64˚FWB		81˚FDB / 66˚FWB		82˚FDB / 68˚FWB		86˚FDB / 72˚FWB		90˚FDB / 75˚FWB	
			21.5˚CDB / 15˚CWB		23˚CDB / 16˚CWB		25˚CDB / 18˚CWB		27˚CDB / 19˚CWB		28˚CDB / 20˚CWB		30˚CDB / 22˚CWB		32˚CDB / 24˚CWB	
	˚FDB	˚CDB	CA	SHC	CA	SHC	CA	SHC	CA	SHC	CA	SHC	CA	SHC	CA	SHC
20 (2.2)	68	20.0	2.1	1.7	2.2	1.7	2.4	1.7	2.5	1.9	2.5	1.8	2.7	1.8	2.9	1.8
	73	22.5	2.1	1.7	2.2	1.7	2.3	1.7	2.4	1.8	2.5	1.8	2.6	1.8	2.8	1.8
	77	25.0	2.1	1.7	2.2	1.7	2.3	1.7	2.4	1.8	2.4	1.8	2.6	1.8	2.8	1.8
	82	27.5	2.1	1.6	2.1	1.7	2.3	1.7	2.3	1.8	2.4	1.8	2.5	1.8	2.7	1.7
	86	30.0	2.0	1.6	2.1	1.7	2.2	1.7	2.3	1.8	2.4	1.8	2.5	1.8	2.6	1.7
	91	32.5	2.0	1.6	2.0	1.7	2.2	1.6	2.2	1.8	2.3	1.8	2.4	1.7	2.6	1.7
	95	35.0	2.0	1.6	2.0	1.6	2.1	1.6	2.2	1.7	2.3	1.7	2.4	1.7	2.5	1.7
	100	37.5	1.9	1.6	1.9	1.6	2.1	1.6	2.1	1.7	2.2	1.7	2.4	1.7	2.5	1.7
	104	40.0	1.9	1.6	1.9	1.6	2.0	1.6	2.1	1.7	2.4	1.8	2.3	1.7	2.4	1.6
	110	43.0	1.8	1.5	1.8	1.6	2.0	1.6	2.0	1.7	2.1	1.7	2.2	1.7	2.4	1.6
25 (2.8)	68	20.0	2.7	2.0	2.8	2.0	3.0	2.0	3.1	2.1	3.2	2.1	3.4	2.1	3.6	2.1
	73	22.5	2.7	2.0	2.8	2.0	3.0	2.0	3.1	2.1	3.2	2.1	3.4	2.1	3.6	2.1
	77	25.0	2.7	1.9	2.7	2.0	2.9	2.0	3.0	2.1	3.1	2.1	3.3	2.1	3.5	2.0
	82	27.5	2.6	1.9	2.7	2.0	2.9	2.0	3.0	2.1	3.1	2.1	3.2	2.0	3.4	2.0
	86	30.0	2.6	1.9	2.6	1.9	2.8	1.9	2.9	2.0	3.0	2.0	3.2	2.0	3.4	2.0
	91	32.5	2.5	1.9	2.6	1.9	2.8	1.9	2.9	2.0	2.9	2.0	3.1	2.0	3.3	2.0
	95	35.0	2.5	1.9	2.5	1.9	2.7	1.9	2.8	2.0	2.9	2.0	3.1	2.0	3.2	1.9
	100	37.5	2.5	1.8	2.5	1.9	2.6	1.9	2.7	2.0	2.8	2.0	3.0	1.9	3.2	1.9
	104	40.0	2.4	1.8	2.4	1.8	2.6	1.8	2.7	1.9	3.0	2.1	2.9	1.9	3.1	1.9
	110	43.0	2.4	1.8	2.4	1.8	2.5	1.8	2.6	1.9	2.7	1.9	2.8	1.9	3.0	1.8
32 (3.6)	68	20.0	3.5	2.5	3.6	2.6	3.9	2.6	4.0	2.7	4.2	2.7	4.4	2.7	4.7	2.6
	73	22.5	3.5	2.5	3.6	2.6	3.8	2.6	4.0	2.7	4.1	2.7	4.3	2.7	4.6	2.6
	77	25.0	3.4	2.5	3.5	2.5	3.8	2.5	3.9	2.7	4.0	2.7	4.2	2.6	4.5	2.6
	82	27.5	3.4	2.5	3.5	2.5	3.7	2.5	3.8	2.6	3.9	2.6	4.2	2.6	4.4	2.5
	86	30.0	3.3	2.4	3.4	2.5	3.6	2.5	3.7	2.6	3.9	2.6	4.1	2.6	4.3	2.5
	91	32.5	3.3	2.4	3.3	2.5	3.5	2.4	3.7	2.6	3.8	2.6	4.0	2.5	4.2	2.5
	95	35.0	3.2	2.4	3.3	2.4	3.5	2.4	3.6	2.5	3.7	2.5	3.9	2.5	4.2	2.5
	100	37.5	3.2	2.4	3.2	2.4	3.4	2.4	3.5	2.5	3.6	2.5	3.9	2.5	4.1	2.4
	104	40.0	3.1	2.3	3.1	2.3	3.3	2.3	3.4	2.5	3.9	2.6	3.8	2.4	4.0	2.4
	110	43.0	3.0	2.3	3.0	2.3	3.2	2.3	3.3	2.4	3.4	2.4	3.7	2.4	3.9	2.4
40 (4.5)	68	20.0	4.4	3.2	4.5	3.3	4.9	3.3	5.0	3.4	5.2	3.4	5.5	3.4	5.9	3.3
	73	22.5	4.3	3.1	4.5	3.2	4.8	3.2	5.0	3.4	5.1	3.4	5.4	3.3	5.7	3.3
	77	25.0	4.3	3.1	4.4	3.2	4.7	3.2	4.9	3.4	5.0	3.3	5.3	3.3	5.6	3.2
	82	27.5	4.2	3.1	4.3	3.2	4.6	3.1	4.8	3.3	4.9	3.3	5.2	3.3	5.5	3.2
	86	30.0	4.1	3.0	4.2	3.1	4.5	3.1	4.7	3.3	4.8	3.3	5.1	3.2	5.4	3.2
	91	32.5	4.1	3.0	4.2	3.1	4.4	3.1	4.6	3.2	4.7	3.2	5.0	3.2	5.3	3.1
	95	35.0	4.0	3.0	4.1	3.0	4.3	3.0	4.5	3.2	4.6	3.2	4.9	3.1	5.2	3.1
	100	37.5	4.0	3.0	4.0	3.0	4.3	3.0	4.4	3.2	4.5	3.1	4.8	3.1	5.1	3.1
	104	40.0	3.9	2.9	3.9	2.9	4.2	2.9	4.3	3.1	4.9	3.3	4.7	3.1	5.0	3.0
	110	43.0	3.8	2.9	3.8	2.9	4.1	2.9	4.2	3.1	4.3	3.0	4.6	3.0	4.8	3.0
50 (5.6)	68	20.0	5.4	4.0	5.6	4.1	6.0	4.1	6.3	4.4	6.5	4.3	6.9	4.3	7.3	4.2
	73	22.5	5.4	4.0	5.6	4.1	6.0	4.1	6.2	4.3	6.4	4.3	6.7	4.2	7.1	4.2
	77	25.0	5.3	3.9	5.5	4.0	5.9	4.0	6.0	4.3	6.2	4.2	6.6	4.2	7.0	4.1
	82	27.5	5.2	3.9	5.4	4.0	5.7	4.0	5.9	4.2	6.1	4.2	6.5	4.1	6.9	4.1
	86	30.0	5.2	3.8	5.3	3.9	5.6	3.9	5.8	4.2	6.0	4.1	6.4	4.1	6.7	4.0
	91	32.5	5.1	3.8	5.2	3.9	5.5	3.9	5.7	4.1	5.9	4.1	6.2	4.0	6.6	4.0
	95	35.0	5.0	3.8	5.1	3.8	5.4	3.8	5.6	4.1	5.8	4.0	6.1	4.0	6.5	3.9
	100	37.5	4.9	3.7	5.0	3.8	5.3	3.8	5.5	4.0	5.7	4.0	6.0	3.9	6.3	3.9
	104	40.0	4.8	3.7	4.8	3.7	5.2	3.7	5.3	4.0	6.1	4.2	5.9	3.9	6.2	3.8
	110	43.0	4.7	3.6	4.7	3.7	5.0	3.7	5.2	3.9	5.3	3.9	5.7	3.8	6.0	3.8
63 (7.1)	68	20.0	6.9	4.9	7.1	5.1	7.7	5.1	8.0	5.4	8.2	5.3	8.7	5.3	9.2	5.2
	73	22.5	6.9	4.9	7.1	5.1	7.6	5.0	7.8	5.3	8.1	5.3	8.5	5.2	9.1	5.1
	77	25.0	6.8	4.9	7.0	5.0	7.4	5.0	7.7	5.2	7.9	5.2	8.4	5.1	8.9	5.1
	82	27.5	6.6	4.8	6.8	4.9	7.3	4.9	7.5	5.2	7.8	5.2	8.2	5.1	8.7	5.0
	86	30.0	6.5	4.8	6.7	4.9	7.1	4.8	7.4	5.1	7.6	5.1	8.1	5.0	8.5	4.9
	91	32.5	6.4	4.7	6.6	4.8	7.0	4.8	7.2	5.1	7.5	5.0	7.9	4.9	8.4	4.9
	95	35.0	6.3	4.6	6.4	4.7	6.8	4.7	7.1	5.0	7.3	5.0	7.7	4.9	8.2	4.8
	100	37.5	6.2	4.6	6.3	4.7	6.7	4.6	6.9	4.9	7.2	4.9	7.6	4.8	8.0	4.8
	104	40.0	6.1	4.6	6.1	4.6	6.6	4.6	6.8	4.9	7.7	5.1	7.4	4.8	7.8	4.7
	110	43.0	6.0	4.5	6.0	4.5	6.4	4.5	6.6	4.8	6.8	4.7	7.2	4.7	7.6	4.6

kcal/h = kW x 860, Btu/h = kW x 3,412

CT

I3. Cooling capacity with PUHY-P450-650Y(S)HM/PUHY-EP450-650YSHM PURY-P450-650YSHM/PURY-EP450-600YSHM

PFFY-P-VKM-E

CA : Capacity(kW) SHC : Sensible Heat Capacity(kW)

Model size (Rated kW)	Outdoor air temp.		Indoor air temp.													
			71 ˚FDB / 59˚FWB		73˚FDB / 61˚FWB		77˚FDB / 64˚FWB		81˚FDB / 66˚FWB		82˚FDB / 68˚FWB		86˚FDB / 72˚FWB		90˚FDB / 75˚FWB	
			21.5˚CDB / 15˚CWB		23˚CDB / 16˚CWB		25˚CDB / 18˚CWB		27˚CDB / 19˚CWB		28˚CDB / 20˚CWB		30˚CDB / 22˚CWB		32˚CDB / 24˚CWB	
	˚FDB	˚CDB	CA	SHC	CA	SHC	CA	SHC	CA	SHC	CA	SHC	CA	SHC	CA	SHC
20 (2.2)	68	20.0	2.1	1.7	2.1	1.7	2.3	1.7	2.4	1.7	2.5	1.8	2.6	1.8	2.8	1.8
	73	22.5	2.1	1.7	2.1	1.7	2.3	1.7	2.3	1.7	2.4	1.8	2.6	1.8	2.7	1.8
	77	25.0	2.0	1.7	2.1	1.7	2.2	1.7	2.3	1.7	2.4	1.8	2.6	1.8	2.7	1.8
	82	27.5	2.0	1.6	2.1	1.7	2.2	1.7	2.3	1.7	2.4	1.8	2.5	1.8	2.6	1.7
	86	30.0	2.0	1.6	2.0	1.7	2.2	1.7	2.3	1.7	2.4	1.8	2.5	1.8	2.7	1.7
	91	32.5	2.0	1.6	2.0	1.7	2.2	1.7	2.2	1.7	2.3	1.8	2.5	1.8	2.6	1.7
	95	35.0	2.0	1.6	2.0	1.7	2.1	1.7	2.2	1.7	2.3	1.8	2.5	1.8	2.6	1.7
	100	37.5	1.9	1.6	2.0	1.6	2.1	1.6	2.2	1.7	2.3	1.8	2.4	1.7	2.6	1.7
	104	40.0	1.9	1.6	1.9	1.6	2.1	1.6	2.1	1.7	2.2	1.7	2.4	1.7	2.6	1.7
	110	43.0	1.9	1.6	1.9	1.6	2.1	1.6	2.1	1.6	2.2	1.7	2.4	1.7	2.6	1.7
25 (2.8)	68	20.0	2.6	2.0	2.7	2.0	2.9	2.0	3.0	2.1	3.1	2.1	3.3	2.1	3.5	2.1
	73	22.5	2.6	2.0	2.7	2.0	2.9	2.0	3.0	2.0	3.1	2.1	3.3	2.1	3.5	2.1
	77	25.0	2.6	2.0	2.7	2.0	2.9	2.0	2.9	2.0	3.1	2.1	3.2	2.1	3.5	2.1
	82	27.5	2.6	1.9	2.6	2.0	2.8	2.0	2.9	2.0	3.0	2.1	3.2	2.1	3.4	2.0
	86	30.0	2.5	1.9	2.6	2.0	2.8	2.0	2.9	2.0	3.0	2.1	3.2	2.1	3.4	2.0
	91	32.5	2.5	1.9	2.6	2.0	2.7	2.0	2.8	2.0	3.0	2.1	3.2	2.1	3.4	2.0
	95	35.0	2.5	1.9	2.5	1.9	2.7	1.9	2.8	2.0	2.9	2.1	3.1	2.1	3.3	2.0
	100	37.5	2.5	1.9	2.5	1.9	2.7	1.9	2.8	2.0	2.9	2.1	3.1	2.0	3.3	2.0
	104	40.0	2.4	1.9	2.5	1.9	2.7	1.9	2.7	1.9	2.9	2.0	3.1	2.0	3.3	2.0
	110	43.0	2.4	1.9	2.5	1.9	2.6	1.9	2.7	1.9	2.8	2.0	3.0	2.0	3.2	2.0
32 (3.6)	68	20.0	3.4	2.4	3.5	2.5	3.7	2.5	3.9	2.5	4.0	2.6	4.2	2.6	4.5	2.5
	73	22.5	3.4	2.4	3.5	2.5	3.7	2.4	3.8	2.5	4.0	2.6	4.2	2.5	4.5	2.5
	77	25.0	3.3	2.4	3.4	2.4	3.7	2.4	3.8	2.5	3.9	2.6	4.2	2.5	4.4	2.5
	82	27.5	3.3	2.4	3.4	2.4	3.6	2.4	3.7	2.4	3.9	2.5	4.1	2.5	4.3	2.4
	86	30.0	3.3	2.3	3.3	2.4	3.6	2.4	3.7	2.4	3.9	2.5	4.1	2.5	4.4	2.5
	91	32.5	3.2	2.3	3.3	2.4	3.5	2.4	3.6	2.4	3.8	2.5	4.1	2.5	4.3	2.4
	95	35.0	3.2	2.3	3.3	2.4	3.5	2.4	3.6	2.4	3.7	2.5	4.0	2.5	4.3	2.4
	100	37.5	3.2	2.3	3.2	2.3	3.5	2.3	3.5	2.3	3.7	2.5	4.0	2.4	4.2	2.4
	104	40.0	3.1	2.3	3.2	2.3	3.4	2.3	3.5	2.3	3.7	2.4	4.0	2.4	4.2	2.4
	110	43.0	3.1	2.3	3.2	2.3	3.4	2.3	3.5	2.3	3.6	2.4	3.9	2.4	4.2	2.4
40 (4.5)	68	20.0	4.3	3.0	4.4	3.1	4.7	3.0	4.8	3.1	5.0	3.2	5.3	3.2	5.7	3.1
	73	22.5	4.2	3.0	4.3	3.0	4.6	3.0	4.8	3.0	5.0	3.2	5.3	3.1	5.6	3.1
	77	25.0	4.2	2.9	4.3	3.0	4.6	3.0	4.7	3.0	4.9	3.1	5.2	3.1	5.6	3.1
	82	27.5	4.1	2.9	4.2	3.0	4.5	3.0	4.7	3.0	4.9	3.1	5.2	3.1	5.4	3.0
	86	30.0	4.1	2.9	4.2	3.0	4.5	3.0	4.6	3.0	4.8	3.1	5.1	3.1	5.4	3.0
	91	32.5	4.1	2.9	4.1	2.9	4.4	2.9	4.5	2.9	4.8	3.1	5.1	3.1	5.4	3.0
	95	35.0	4.0	2.9	4.1	2.9	4.4	2.9	4.5	2.9	4.7	3.0	5.0	3.0	5.4	3.0
	100	37.5	4.0	2.8	4.0	2.9	4.3	2.9	4.4	2.9	4.7	3.0	5.0	3.0	5.3	3.0
	104	40.0	3.9	2.8	4.0	2.9	4.3	2.9	4.4	2.9	4.6	3.0	5.0	3.0	5.3	3.0
	110	43.0	3.9	2.8	3.9	2.8	4.2	2.8	4.3	2.8	4.5	3.0	4.9	3.0	5.2	2.9

kcal/h = kW x 860, Btu/h = kW x 3,412

I3. Cooling capacity with PUHY-P450-650Y(S)HM/PUHY-EP450-650YSHM PURY-P450-650YSHM/PURY-EP450-600YSHM

PFFY-P-VLEM-E,VLRM-E

CA : Capacity(kW) SHC : Sensible Heat Capacity(kW)

Model size (Rated kW)	Outdoor air temp.		Indoor air temp.													
			71 ˚FDB / 59˚FWB		73˚FDB / 61˚FWB		77˚FDB / 64˚FWB		81˚FDB / 66˚FWB		82˚FDB / 68˚FWB		86˚FDB / 72˚FWB		90˚FDB / 75˚FWB	
			21.5˚CDB / 15˚CWB		23˚CDB / 16˚CWB		25˚CDB / 18˚CWB		27˚CDB / 19˚CWB		28˚CDB / 20˚CWB		30˚CDB / 22˚CWB		32˚CDB / 24˚CWB	
	˚FDB	˚CDB	CA	SHC	CA	SHC	CA	SHC	CA	SHC	CA	SHC	CA	SHC	CA	SHC
20 (2.2)	68	20.0	2.1	1.9	2.1	1.9	2.3	1.9	2.4	2.0	2.5	2.1	2.6	2.0	2.8	2.0
	73	22.5	2.1	1.9	2.1	1.9	2.3	1.9	2.3	2.0	2.4	2.1	2.6	2.0	2.7	2.0
	77	25.0	2.0	1.9	2.1	1.9	2.2	1.9	2.3	2.0	2.4	2.1	2.6	2.0	2.7	2.0
	82	27.5	2.0	1.8	2.1	1.9	2.2	1.9	2.3	2.0	2.4	2.0	2.5	2.0	2.6	2.0
	86	30.0	2.0	1.8	2.0	1.9	2.2	1.9	2.3	1.9	2.4	2.0	2.5	2.0	2.7	2.0
	91	32.5	2.0	1.8	2.0	1.9	2.2	1.9	2.2	1.9	2.3	2.0	2.5	2.0	2.6	2.0
	95	35.0	2.0	1.8	2.0	1.9	2.1	1.9	2.2	1.9	2.3	2.0	2.5	2.0	2.6	2.0
	100	37.5	1.9	1.8	2.0	1.9	2.1	1.9	2.2	1.9	2.3	2.0	2.4	2.0	2.6	2.0
	104	40.0	1.9	1.8	1.9	1.9	2.1	1.9	2.1	1.9	2.2	2.0	2.4	2.0	2.6	2.0
	110	43.0	1.9	1.8	1.9	1.8	2.1	1.8	2.1	1.9	2.2	2.0	2.4	2.0	2.6	2.0
25 (2.8)	68	20.0	2.6	2.1	2.7	2.2	2.9	2.2	3.0	2.2	3.1	2.3	3.3	2.3	3.5	2.3
	73	22.5	2.6	2.1	2.7	2.2	2.9	2.2	3.0	2.2	3.1	2.3	3.3	2.3	3.5	2.3
	77	25.0	2.6	2.1	2.7	2.2	2.9	2.2	2.9	2.2	3.1	2.3	3.2	2.3	3.5	2.3
	82	27.5	2.6	2.1	2.6	2.2	2.8	2.2	2.9	2.2	3.0	2.3	3.2	2.3	3.4	2.2
	86	30.0	2.5	2.1	2.6	2.1	2.8	2.1	2.9	2.2	3.0	2.3	3.2	2.3	3.4	2.2
	91	32.5	2.5	2.1	2.6	2.1	2.7	2.1	2.8	2.2	3.0	2.3	3.2	2.2	3.4	2.2
	95	35.0	2.5	2.1	2.5	2.1	2.7	2.1	2.8	2.2	2.9	2.3	3.1	2.2	3.3	2.2
	100	37.5	2.5	2.0	2.5	2.1	2.7	2.1	2.8	2.1	2.9	2.2	3.1	2.2	3.3	2.2
	104	40.0	2.4	2.0	2.5	2.1	2.7	2.1	2.7	2.1	2.9	2.2	3.1	2.2	3.3	2.2
	110	43.0	2.4	2.0	2.5	2.1	2.6	2.1	2.7	2.1	2.8	2.2	3.0	2.2	3.2	2.2
32 (3.6)	68	20.0	3.4	2.5	3.5	2.5	3.7	2.5	3.9	2.6	4.0	2.7	4.2	2.6	4.5	2.6
	73	22.5	3.4	2.5	3.5	2.5	3.7	2.5	3.8	2.5	4.0	2.6	4.2	2.6	4.5	2.6
	77	25.0	3.3	2.4	3.4	2.5	3.7	2.5	3.8	2.5	3.9	2.6	4.2	2.6	4.4	2.6
	82	27.5	3.3	2.4	3.4	2.5	3.6	2.5	3.7	2.5	3.9	2.6	4.1	2.6	4.3	2.5
	86	30.0	3.3	2.4	3.3	2.5	3.6	2.5	3.7	2.5	3.9	2.6	4.1	2.6	4.4	2.5
	91	32.5	3.2	2.4	3.3	2.4	3.5	2.4	3.6	2.5	3.8	2.6	4.1	2.6	4.3	2.5
	95	35.0	3.2	2.4	3.3	2.4	3.5	2.4	3.6	2.4	3.7	2.5	4.0	2.5	4.3	2.5
	100	37.5	3.2	2.4	3.2	2.4	3.5	2.4	3.5	2.4	3.7	2.5	4.0	2.5	4.2	2.5
	104	40.0	3.1	2.3	3.2	2.4	3.4	2.4	3.5	2.4	3.7	2.5	4.0	2.5	4.2	2.5
	110	43.0	3.1	2.3	3.2	2.4	3.4	2.4	3.5	2.4	3.6	2.5	3.9	2.5	4.2	2.5
40 (4.5)	68	20.0	4.3	3.1	4.4	3.2	4.7	3.2	4.8	3.2	5.0	3.3	5.3	3.3	5.7	3.3
	73	22.5	4.2	3.1	4.3	3.2	4.6	3.1	4.8	3.2	5.0	3.3	5.3	3.3	5.6	3.2
	77	25.0	4.2	3.1	4.3	3.1	4.6	3.1	4.7	3.2	4.9	3.3	5.2	3.3	5.6	3.2
	82	27.5	4.1	3.0	4.2	3.1	4.5	3.1	4.7	3.1	4.9	3.3	5.2	3.2	5.4	3.2
	86	30.0	4.1	3.0	4.2	3.1	4.5	3.1	4.6	3.1	4.8	3.3	5.1	3.2	5.4	3.2
	91	32.5	4.1	3.0	4.1	3.1	4.4	3.0	4.5	3.1	4.8	3.2	5.1	3.2	5.4	3.2
	95	35.0	4.0	3.0	4.1	3.0	4.4	3.0	4.5	3.1	4.7	3.2	5.0	3.2	5.4	3.1
	100	37.5	4.0	3.0	4.0	3.0	4.3	3.0	4.4	3.0	4.7	3.2	5.0	3.2	5.3	3.1
	104	40.0	3.9	2.9	4.0	3.0	4.3	3.0	4.4	3.0	4.6	3.2	5.0	3.2	5.3	3.1
	110	43.0	3.9	2.9	3.9	3.0	4.2	3.0	4.3	3.0	4.5	3.1	4.9	3.1	5.2	3.1
50 (5.6)	68	20.0	5.3	3.9	5.5	4.0	5.8	4.0	6.0	4.1	6.2	4.2	6.6	4.2	7.1	4.1
	73	22.5	5.3	3.9	5.4	4.0	5.8	4.0	5.9	4.0	6.2	4.2	6.6	4.2	7.0	4.1
	77	25.0	5.2	3.9	5.3	4.0	5.7	4.0	5.9	4.0	6.1	4.2	6.5	4.1	6.9	4.1
	82	27.5	5.2	3.8	5.3	3.9	5.7	3.9	5.8	4.0	6.0	4.2	6.4	4.1	6.7	4.0
	86	30.0	5.1	3.8	5.2	3.9	5.6	3.9	5.8	4.0	6.0	4.1	6.4	4.1	6.8	4.0
	91	32.5	5.0	3.8	5.2	3.9	5.5	3.9	5.7	3.9	5.9	4.1	6.3	4.1	6.7	4.0
	95	35.0	5.0	3.8	5.1	3.8	5.5	3.8	5.6	3.9	5.8	4.1	6.3	4.0	6.7	4.0
	100	37.5	4.9	3.7	5.0	3.8	5.4	3.8	5.5	3.9	5.8	4.0	6.2	4.0	6.6	4.0
	104	40.0	4.8	3.7	5.0	3.8	5.3	3.8	5.4	3.8	5.7	4.0	6.2	4.0	6.6	3.9
	110	43.0	4.8	3.7	4.9	3.8	5.3	3.8	5.4	3.8	5.7	4.0	6.0	4.0	6.5	3.9
63 (7.1)	68	20.0	6.7	4.9	6.9	5.0	7.4	5.0	7.6	5.0	7.9	5.2	8.4	5.1	8.9	5.1
	73	22.5	6.7	4.8	6.9	4.9	7.3	4.9	7.5	5.0	7.8	5.2	8.3	5.1	8.8	5.1
	77	25.0	6.6	4.8	6.8	4.9	7.2	4.9	7.5	4.9	7.7	5.1	8.2	5.1	8.8	5.0
	82	27.5	6.5	4.8	6.7	4.9	7.2	4.9	7.4	4.9	7.7	5.1	8.2	5.1	8.5	4.9
	86	30.0	6.5	4.7	6.6	4.8	7.1	4.8	7.3	4.9	7.6	5.1	8.1	5.0	8.6	5.0
	91	32.5	6.4	4.7	6.5	4.8	7.0	4.8	7.2	4.8	7.5	5.1	8.0	5.0	8.5	4.9
	95	35.0	6.3	4.7	6.4	4.7	6.9	4.7	7.1	4.8	7.4	5.0	8.0	5.0	8.4	4.9
	100	37.5	6.2	4.6	6.4	4.7	6.8	4.7	7.0	4.7	7.3	5.0	7.8	4.9	8.4	4.9
	104	40.0	6.1	4.6	6.3	4.7	6.8	4.7	6.9	4.7	7.2	4.9	7.8	4.9	8.3	4.9
	110	43.0	6.1	4.5	6.2	4.6	6.7	4.6	6.8	4.7	7.2	4.9	7.7	4.9	8.2	4.8

kcal/h = kW x 860, Btu/h = kW x 3,412

CT

I3. Cooling capacity with PUHY-P450-650Y(S)HM/PUHY-EP450-650YSHM PURY-P450-650YSHM/PURY-EP450-600YSHM

PFFY-P-VLRMM-E

CA : Capacity(kW) SHC : Sensible Heat Capacity(kW)

Model size (Rated kW)	Outdoor air temp.		Indoor air temp.													
			71 ˚FDB / 59˚FWB		73˚FDB / 61˚FWB		77˚FDB / 64˚FWB		81˚FDB / 66˚FWB		82˚FDB / 68˚FWB		86˚FDB / 72˚FWB		90˚FDB / 75˚FWB	
			21.5˚CDB / 15˚CWB		23˚CDB / 16˚CWB		25˚CDB / 18˚CWB		27˚CDB / 19˚CWB		28˚CDB / 20˚CWB		30˚CDB / 22˚CWB		32˚CDB / 24˚CWB	
	˚FDB	˚CDB	CA	SHC	CA	SHC	CA	SHC	CA	SHC	CA	SHC	CA	SHC	CA	SHC
20 (2.2)	68	20.0	2.1	1.7	2.1	1.7	2.3	1.7	2.4	1.8	2.5	1.8	2.6	1.8	2.8	1.8
	73	22.5	2.1	1.7	2.1	1.7	2.3	1.7	2.3	1.8	2.4	1.8	2.6	1.8	2.7	1.8
	77	25.0	2.0	1.6	2.1	1.7	2.2	1.7	2.3	1.8	2.4	1.8	2.6	1.8	2.7	1.7
	82	27.5	2.0	1.6	2.1	1.7	2.2	1.7	2.3	1.8	2.4	1.8	2.5	1.8	2.6	1.7
	86	30.0	2.0	1.6	2.0	1.7	2.2	1.7	2.3	1.8	2.4	1.8	2.5	1.8	2.7	1.7
	91	32.5	2.0	1.6	2.0	1.7	2.2	1.6	2.2	1.8	2.3	1.8	2.5	1.7	2.6	1.7
	95	35.0	2.0	1.6	2.0	1.6	2.1	1.6	2.2	1.7	2.3	1.7	2.5	1.7	2.6	1.7
	100	37.5	1.9	1.6	2.0	1.6	2.1	1.6	2.2	1.7	2.3	1.7	2.4	1.7	2.6	1.7
	104	40.0	1.9	1.6	1.9	1.6	2.1	1.6	2.1	1.7	2.2	1.7	2.4	1.7	2.6	1.7
	110	43.0	1.9	1.6	1.9	1.6	2.1	1.6	2.1	1.7	2.2	1.7	2.4	1.7	2.6	1.7
25 (2.8)	68	20.0	2.6	1.9	2.7	2.0	2.9	2.0	3.0	2.1	3.1	2.1	3.3	2.1	3.5	2.0
	73	22.5	2.6	1.9	2.7	2.0	2.9	2.0	3.0	2.1	3.1	2.1	3.3	2.1	3.5	2.0
	77	25.0	2.6	1.9	2.7	2.0	2.9	2.0	2.9	2.1	3.1	2.1	3.2	2.0	3.5	2.0
	82	27.5	2.6	1.9	2.6	1.9	2.8	1.9	2.9	2.0	3.0	2.0	3.2	2.0	3.4	2.0
	86	30.0	2.5	1.9	2.6	1.9	2.8	1.9	2.9	2.0	3.0	2.0	3.2	2.0	3.4	2.0
	91	32.5	2.5	1.9	2.6	1.9	2.7	1.9	2.8	2.0	3.0	2.0	3.2	2.0	3.4	2.0
	95	35.0	2.5	1.9	2.5	1.9	2.7	1.9	2.8	2.0	2.9	2.0	3.1	2.0	3.3	2.0
	100	37.5	2.5	1.8	2.5	1.9	2.7	1.9	2.8	2.0	2.9	2.0	3.1	2.0	3.3	2.0
	104	40.0	2.4	1.8	2.5	1.9	2.7	1.9	2.7	2.0	2.9	2.0	3.1	2.0	3.3	1.9
	110	43.0	2.4	1.8	2.5	1.9	2.6	1.8	2.7	1.9	2.8	2.0	3.0	1.9	3.2	1.9
32 (3.6)	68	20.0	3.4	2.5	3.5	2.5	3.7	2.5	3.9	2.7	4.0	2.7	4.2	2.6	4.5	2.6
	73	22.5	3.4	2.5	3.5	2.5	3.7	2.5	3.8	2.6	4.0	2.6	4.2	2.6	4.5	2.6
	77	25.0	3.3	2.4	3.4	2.5	3.7	2.5	3.8	2.6	3.9	2.6	4.2	2.6	4.4	2.6
	82	27.5	3.3	2.4	3.4	2.5	3.6	2.5	3.7	2.6	3.9	2.6	4.1	2.6	4.3	2.5
	86	30.0	3.3	2.4	3.3	2.5	3.6	2.5	3.7	2.6	3.9	2.6	4.1	2.6	4.4	2.5
	91	32.5	3.2	2.4	3.3	2.4	3.5	2.4	3.6	2.6	3.8	2.6	4.1	2.6	4.3	2.5
	95	35.0	3.2	2.4	3.3	2.4	3.5	2.4	3.6	2.5	3.7	2.5	4.0	2.5	4.3	2.5
	100	37.5	3.2	2.4	3.2	2.4	3.5	2.4	3.5	2.5	3.7	2.5	4.0	2.5	4.2	2.5
	104	40.0	3.1	2.3	3.2	2.4	3.4	2.4	3.5	2.5	3.7	2.5	4.0	2.5	4.2	2.5
	110	43.0	3.1	2.3	3.2	2.4	3.4	2.4	3.5	2.5	3.6	2.5	3.9	2.5	4.2	2.5
40 (4.5)	68	20.0	4.3	3.1	4.4	3.2	4.7	3.2	4.8	3.3	5.0	3.3	5.3	3.3	5.7	3.3
	73	22.5	4.2	3.1	4.3	3.2	4.6	3.1	4.8	3.3	5.0	3.3	5.3	3.3	5.6	3.2
	77	25.0	4.2	3.1	4.3	3.1	4.6	3.1	4.7	3.3	4.9	3.3	5.2	3.3	5.6	3.2
	82	27.5	4.1	3.0	4.2	3.1	4.5	3.1	4.7	3.3	4.9	3.3	5.2	3.2	5.4	3.2
	86	30.0	4.1	3.0	4.2	3.1	4.5	3.1	4.6	3.3	4.8	3.3	5.1	3.2	5.4	3.2
	91	32.5	4.1	3.0	4.1	3.1	4.4	3.0	4.5	3.2	4.8	3.2	5.1	3.2	5.4	3.2
	95	35.0	4.0	3.0	4.1	3.0	4.4	3.0	4.5	3.2	4.7	3.2	5.0	3.2	5.4	3.1
	100	37.5	4.0	3.0	4.0	3.0	4.3	3.0	4.4	3.2	4.7	3.2	5.0	3.2	5.3	3.1
	104	40.0	3.9	2.9	4.0	3.0	4.3	3.0	4.4	3.1	4.6	3.2	5.0	3.2	5.3	3.1
	110	43.0	3.9	2.9	3.9	3.0	4.2	3.0	4.3	3.1	4.5	3.1	4.9	3.1	5.2	3.1
50 (5.6)	68	20.0	5.3	3.9	5.5	4.0	5.8	4.0	6.0	4.2	6.2	4.2	6.6	4.2	7.1	4.1
	73	22.5	5.3	3.9	5.4	4.0	5.8	4.0	5.9	4.2	6.2	4.2	6.6	4.2	7.0	4.1
	77	25.0	5.2	3.9	5.3	4.0	5.7	4.0	5.9	4.2	6.1	4.2	6.5	4.1	6.9	4.1
	82	27.5	5.2	3.8	5.3	3.9	5.7	3.9	5.8	4.2	6.0	4.2	6.4	4.1	6.7	4.0
	86	30.0	5.1	3.8	5.2	3.9	5.6	3.9	5.8	4.1	6.0	4.1	6.4	4.1	6.8	4.0
	91	32.5	5.0	3.8	5.2	3.9	5.5	3.9	5.7	4.1	5.9	4.1	6.3	4.1	6.7	4.0
	95	35.0	5.0	3.8	5.1	3.8	5.5	3.8	5.6	4.1	5.8	4.1	6.3	4.0	6.7	4.0
	100	37.5	4.9	3.7	5.0	3.8	5.4	3.8	5.5	4.0	5.8	4.0	6.2	4.0	6.6	4.0
	104	40.0	4.8	3.7	5.0	3.8	5.3	3.8	5.4	4.0	5.7	4.0	6.2	4.0	6.6	3.9
	110	43.0	4.8	3.7	4.9	3.8	5.3	3.8	5.4	4.0	5.7	4.0	6.0	4.0	6.5	3.9
63 (7.1)	68	20.0	6.7	4.8	6.9	5.0	7.4	5.0	7.6	5.2	7.9	5.2	8.4	5.1	8.9	5.1
	73	22.5	6.7	4.8	6.9	4.9	7.3	4.9	7.5	5.2	7.8	5.2	8.3	5.1	8.8	5.0
	77	25.0	6.6	4.8	6.8	4.9	7.2	4.9	7.5	5.2	7.7	5.1	8.2	5.1	8.8	5.0
	82	27.5	6.5	4.8	6.7	4.9	7.2	4.9	7.4	5.1	7.7	5.1	8.2	5.1	8.5	4.9
	86	30.0	6.5	4.7	6.6	4.8	7.1	4.8	7.3	5.1	7.6	5.1	8.1	5.0	8.6	5.0
	91	32.5	6.4	4.7	6.5	4.8	7.0	4.8	7.2	5.0	7.5	5.1	8.0	5.0	8.5	4.9
	95	35.0	6.3	4.6	6.4	4.7	6.9	4.7	7.1	5.0	7.4	5.0	8.0	5.0	8.4	4.9
	100	37.5	6.2	4.6	6.4	4.7	6.8	4.7	7.0	4.9	7.3	5.0	7.8	4.9	8.4	4.9
	104	40.0	6.1	4.6	6.3	4.7	6.8	4.7	6.9	4.9	7.2	4.9	7.8	4.9	8.3	4.9
	110	43.0	6.1	4.5	6.2	4.6	6.7	4.6	6.8	4.9	7.2	4.9	7.7	4.9	8.2	4.8

kcal/h = kW x 860, Btu/h = kW x 3,412

I4. Cooling capacity with PUHY-P700-800YSHM/PUHY-EP700-800YSHM PURY-P700-800YSHM

PFFY-P-VKM-E

CA : Capacity(kW) SHC : Sensible Heat Capacity(kW)

Model size (Rated kW)	Outdoor air temp.		Indoor air temp.													
			71 ˚FDB / 59˚FWB		73˚FDB / 61˚FWB		77˚FDB / 64˚FWB		81˚FDB / 66˚FWB		82˚FDB / 68˚FWB		86˚FDB / 72˚FWB		90˚FDB / 75˚FWB	
			21.5˚CDB / 15˚CWB		23˚CDB / 16˚CWB		25˚CDB / 18˚CWB		27˚CDB / 19˚CWB		28˚CDB / 20˚CWB		30˚CDB / 22˚CWB		32˚CDB / 24˚CWB	
	˚FDB	˚CDB	CA	SHC	CA	SHC	CA	SHC	CA	SHC	CA	SHC	CA	SHC	CA	SHC
20 (2.2)	68	20.0	2.1	1.7	2.2	1.7	2.4	1.7	2.4	1.8	2.5	1.9	2.7	1.8	2.9	1.8
	73	22.5	2.1	1.7	2.2	1.7	2.3	1.7	2.4	1.8	2.5	1.8	2.7	1.8	2.8	1.8
	77	25.0	2.1	1.7	2.1	1.7	2.3	1.7	2.4	1.7	2.4	1.8	2.6	1.8	2.8	1.8
	82	27.5	2.0	1.6	2.1	1.7	2.2	1.7	2.3	1.7	2.4	1.8	2.6	1.8	2.7	1.8
	86	30.0	2.0	1.6	2.1	1.7	2.2	1.7	2.3	1.7	2.4	1.8	2.5	1.8	2.7	1.7
	91	32.5	1.9	1.6	2.0	1.7	2.2	1.7	2.2	1.7	2.3	1.8	2.5	1.8	2.6	1.7
	95	35.0	1.9	1.6	2.0	1.6	2.1	1.6	2.2	1.7	2.3	1.7	2.4	1.7	2.6	1.7
	100	37.5	1.9	1.6	2.0	1.6	2.1	1.6	2.2	1.7	2.2	1.7	2.4	1.7	2.5	1.7
	104	40.0	1.8	1.6	1.9	1.6	2.0	1.6	2.1	1.6	2.2	1.7	2.3	1.7	2.5	1.7
	110	43.0	1.8	1.5	1.8	1.6	2.0	1.6	2.1	1.6	2.1	1.7	2.3	1.7	2.4	1.7
25 (2.8)	68	20.0	2.7	2.0	2.8	2.1	3.0	2.1	3.1	2.1	3.2	2.2	3.4	2.2	3.7	2.1
	73	22.5	2.7	2.0	2.8	2.1	3.0	2.0	3.1	2.1	3.2	2.2	3.4	2.2	3.6	2.1
	77	25.0	2.6	2.0	2.7	2.0	2.9	2.0	3.0	2.1	3.1	2.1	3.3	2.1	3.5	2.1
	82	27.5	2.6	1.9	2.7	2.0	2.9	2.0	3.0	2.0	3.1	2.1	3.3	2.1	3.5	2.1
	86	30.0	2.5	1.9	2.6	2.0	2.8	2.0	2.9	2.0	3.0	2.1	3.2	2.1	3.4	2.1
	91	32.5	2.5	1.9	2.6	2.0	2.7	2.0	2.8	2.0	2.9	2.1	3.1	2.1	3.3	2.0
	95	35.0	2.4	1.9	2.5	1.9	2.7	1.9	2.8	2.0	2.9	2.0	3.1	2.0	3.3	2.0
	100	37.5	2.4	1.9	2.5	1.9	2.6	1.9	2.7	2.0	2.8	2.0	3.0	2.0	3.2	2.0
	104	40.0	2.4	1.8	2.4	1.9	2.6	1.9	2.7	1.9	2.8	2.0	3.0	2.0	3.2	2.0
	110	43.0	2.3	1.8	2.4	1.9	2.5	1.9	2.6	1.9	2.7	2.0	2.9	2.0	3.1	1.9
32 (3.6)	68	20.0	3.5	2.5	3.6	2.5	3.9	2.5	4.0	2.6	4.1	2.7	4.4	2.6	4.7	2.6
	73	22.5	3.4	2.4	3.5	2.5	3.8	2.5	3.9	2.5	4.1	2.6	4.4	2.6	4.6	2.6
	77	25.0	3.4	2.4	3.5	2.5	3.7	2.5	3.9	2.5	4.0	2.6	4.2	2.6	4.5	2.5
	82	27.5	3.3	2.4	3.4	2.4	3.7	2.4	3.8	2.5	3.9	2.6	4.2	2.5	4.5	2.5
	86	30.0	3.2	2.3	3.4	2.4	3.6	2.4	3.7	2.4	3.9	2.5	4.1	2.5	4.4	2.5
	91	32.5	3.2	2.3	3.3	2.4	3.5	2.4	3.7	2.4	3.8	2.5	4.0	2.5	4.3	2.4
	95	35.0	3.1	2.3	3.2	2.3	3.5	2.3	3.6	2.4	3.7	2.5	4.0	2.4	4.2	2.4
	100	37.5	3.1	2.2	3.2	2.3	3.4	2.3	3.5	2.3	3.7	2.4	3.9	2.4	4.1	2.4
	104	40.0	3.0	2.2	3.1	2.3	3.3	2.3	3.5	2.3	3.6	2.4	3.8	2.4	4.1	2.3
	110	43.0	3.0	2.2	3.0	2.2	3.2	2.2	3.4	2.3	3.5	2.4	3.7	2.3	4.0	2.3
40 (4.5)	68	20.0	4.3	3.0	4.5	3.1	4.8	3.1	5.0	3.2	5.2	3.3	5.5	3.2	5.9	3.2
	73	22.5	4.3	3.0	4.4	3.1	4.7	3.1	4.9	3.1	5.1	3.2	5.4	3.2	5.8	3.2
	77	25.0	4.2	3.0	4.4	3.0	4.7	3.0	4.8	3.1	5.0	3.2	5.3	3.2	5.7	3.1
	82	27.5	4.1	2.9	4.3	3.0	4.6	3.0	4.7	3.0	4.9	3.1	5.2	3.1	5.6	3.1
	86	30.0	4.1	2.9	4.2	3.0	4.5	3.0	4.7	3.0	4.8	3.1	5.1	3.1	5.5	3.0
	91	32.5	4.0	2.8	4.1	2.9	4.4	2.9	4.6	3.0	4.7	3.1	5.0	3.0	5.4	3.0
	95	35.0	3.9	2.8	4.1	2.9	4.3	2.9	4.5	2.9	4.6	3.0	5.0	3.0	5.3	3.0
	100	37.5	3.8	2.8	4.0	2.9	4.3	2.8	4.4	2.9	4.6	3.0	4.9	3.0	5.2	2.9
	104	40.0	3.8	2.7	3.9	2.8	4.2	2.8	4.3	2.8	4.5	3.0	4.8	2.9	5.1	2.9
	110	43.0	3.7	2.7	3.8	2.8	4.1	2.7	4.2	2.8	4.4	2.9	4.7	2.9	5.0	2.8

kcal/h = kW x 860, Btu/h = kW x 3,412

CT

I4. Cooling capacity with PUHY-P700-800YSHM/PUHY-EP700-800YSHM PURY-P700-800YSHM

PFFY-P-VLEM-E,VLRM-E

CA : Capacity(kW) SHC : Sensible Heat Capacity(kW)

Model size (Rated kW)	Outdoor air temp.		Indoor air temp.													
			71 ˚FDB / 59˚FWB		73˚FDB / 61˚FWB		77˚FDB / 64˚FWB		81˚FDB / 66˚FWB		82˚FDB / 68˚FWB		86˚FDB / 72˚FWB		90˚FDB / 75˚FWB	
			21.5˚CDB / 15˚CWB		23˚CDB / 16˚CWB		25˚CDB / 18˚CWB		27˚CDB / 19˚CWB		28˚CDB / 20˚CWB		30˚CDB / 22˚CWB		32˚CDB / 24˚CWB	
	˚FDB	˚CDB	CA	SHC	CA	SHC	CA	SHC	CA	SHC	CA	SHC	CA	SHC	CA	SHC
20 (2.2)	68	20.0	2.1	1.9	2.2	2.0	2.4	2.0	2.4	2.0	2.5	2.1	2.7	2.1	2.9	2.1
	73	22.5	2.1	1.9	2.2	2.0	2.3	1.9	2.4	2.0	2.5	2.1	2.7	2.1	2.8	2.0
	77	25.0	2.1	1.9	2.1	1.9	2.3	1.9	2.4	2.0	2.4	2.1	2.6	2.0	2.8	2.0
	82	27.5	2.0	1.8	2.1	1.9	2.2	1.9	2.3	2.0	2.4	2.1	2.6	2.0	2.7	2.0
	86	30.0	2.0	1.8	2.1	1.9	2.2	1.9	2.3	1.9	2.4	2.0	2.5	2.0	2.7	2.0
	91	32.5	1.9	1.8	2.0	1.9	2.2	1.9	2.2	1.9	2.3	2.0	2.5	2.0	2.6	2.0
	95	35.0	1.9	1.8	2.0	1.9	2.1	1.9	2.2	1.9	2.3	2.0	2.4	2.0	2.6	2.0
	100	37.5	1.9	1.8	2.0	1.9	2.1	1.8	2.2	1.9	2.2	2.0	2.4	2.0	2.5	1.9
	104	40.0	1.8	1.8	1.9	1.8	2.0	1.8	2.1	1.9	2.2	2.0	2.3	2.0	2.5	1.9
	110	43.0	1.8	1.8	1.8	1.8	2.0	1.8	2.1	1.9	2.1	2.0	2.3	1.9	2.4	1.9
25 (2.8)	68	20.0	2.7	2.2	2.8	2.2	3.0	2.2	3.1	2.3	3.2	2.4	3.4	2.4	3.7	2.3
	73	22.5	2.7	2.1	2.8	2.2	3.0	2.2	3.1	2.3	3.2	2.4	3.4	2.3	3.6	2.3
	77	25.0	2.6	2.1	2.7	2.2	2.9	2.2	3.0	2.2	3.1	2.3	3.3	2.3	3.5	2.3
	82	27.5	2.6	2.1	2.7	2.2	2.9	2.2	3.0	2.2	3.1	2.3	3.3	2.3	3.5	2.3
	86	30.0	2.5	2.1	2.6	2.2	2.8	2.1	2.9	2.2	3.0	2.3	3.2	2.3	3.4	2.2
	91	32.5	2.5	2.1	2.6	2.1	2.7	2.1	2.8	2.2	2.9	2.3	3.1	2.2	3.3	2.2
	95	35.0	2.4	2.0	2.5	2.1	2.7	2.1	2.8	2.2	2.9	2.2	3.1	2.2	3.3	2.2
	100	37.5	2.4	2.0	2.5	2.1	2.6	2.1	2.7	2.1	2.8	2.2	3.0	2.2	3.2	2.2
	104	40.0	2.4	2.0	2.4	2.1	2.6	2.1	2.7	2.1	2.8	2.2	3.0	2.2	3.2	2.1
	110	43.0	2.3	2.0	2.4	2.0	2.5	2.0	2.6	2.1	2.7	2.2	2.9	2.2	3.1	2.1
32 (3.6)	68	20.0	3.5	2.5	3.6	2.6	3.9	2.6	4.0	2.6	4.1	2.7	4.4	2.7	4.7	2.7
	73	22.5	3.4	2.5	3.5	2.6	3.8	2.5	3.9	2.6	4.1	2.7	4.4	2.7	4.6	2.6
	77	25.0	3.4	2.5	3.5	2.5	3.7	2.5	3.9	2.6	4.0	2.7	4.2	2.6	4.5	2.6
	82	27.5	3.3	2.4	3.4	2.5	3.7	2.5	3.8	2.5	3.9	2.6	4.2	2.6	4.5	2.6
	86	30.0	3.2	2.4	3.4	2.5	3.6	2.5	3.7	2.5	3.9	2.6	4.1	2.6	4.4	2.5
	91	32.5	3.2	2.4	3.3	2.4	3.5	2.4	3.7	2.5	3.8	2.6	4.0	2.5	4.3	2.5
	95	35.0	3.1	2.3	3.2	2.4	3.5	2.4	3.6	2.4	3.7	2.5	4.0	2.5	4.2	2.5
	100	37.5	3.1	2.3	3.2	2.4	3.4	2.4	3.5	2.4	3.7	2.5	3.9	2.5	4.1	2.5
	104	40.0	3.0	2.3	3.1	2.3	3.3	2.3	3.5	2.4	3.6	2.5	3.8	2.5	4.1	2.4
	110	43.0	3.0	2.2	3.0	2.3	3.2	2.3	3.4	2.3	3.5	2.4	3.7	2.4	4.0	2.4
40 (4.5)	68	20.0	4.3	3.1	4.5	3.2	4.8	3.2	5.0	3.3	5.2	3.4	5.5	3.4	5.9	3.3
	73	22.5	4.3	3.1	4.4	3.2	4.7	3.2	4.9	3.2	5.1	3.4	5.4	3.4	5.8	3.3
	77	25.0	4.2	3.1	4.4	3.2	4.7	3.2	4.8	3.2	5.0	3.3	5.3	3.3	5.7	3.3
	82	27.5	4.1	3.0	4.3	3.1	4.6	3.1	4.7	3.2	4.9	3.3	5.2	3.3	5.6	3.2
	86	30.0	4.1	3.0	4.2	3.1	4.5	3.1	4.7	3.1	4.8	3.3	5.1	3.2	5.5	3.2
	91	32.5	4.0	3.0	4.1	3.1	4.4	3.0	4.6	3.1	4.7	3.2	5.0	3.2	5.4	3.2
	95	35.0	3.9	2.9	4.1	3.0	4.3	3.0	4.5	3.1	4.6	3.2	5.0	3.2	5.3	3.1
	100	37.5	3.8	2.9	4.0	3.0	4.3	3.0	4.4	3.0	4.6	3.2	4.9	3.1	5.2	3.1
	104	40.0	3.8	2.9	3.9	2.9	4.2	2.9	4.3	3.0	4.5	3.1	4.8	3.1	5.1	3.0
	110	43.0	3.7	2.8	3.8	2.9	4.1	2.9	4.2	2.9	4.4	3.1	4.7	3.0	5.0	3.0
50 (5.6)	68	20.0	5.4	4.0	5.6	4.1	6.0	4.1	6.2	4.2	6.4	4.3	6.9	4.3	7.3	4.2
	73	22.5	5.3	3.9	5.5	4.1	5.9	4.0	6.1	4.1	6.3	4.3	6.8	4.2	7.2	4.2
	77	25.0	5.3	3.9	5.4	4.0	5.8	4.0	6.0	4.1	6.2	4.2	6.6	4.2	7.1	4.1
	82	27.5	5.2	3.8	5.3	4.0	5.7	4.0	5.9	4.0	6.1	4.2	6.5	4.1	6.9	4.1
	86	30.0	5.0	3.8	5.2	3.9	5.6	3.9	5.8	4.0	6.0	4.1	6.4	4.1	6.8	4.0
	91	32.5	5.0	3.8	5.1	3.9	5.5	3.9	5.7	3.9	5.9	4.1	6.3	4.0	6.7	4.0
	95	35.0	4.9	3.7	5.0	3.8	5.4	3.8	5.6	3.9	5.8	4.0	6.2	4.0	6.6	3.9
	100	37.5	4.8	3.7	5.0	3.8	5.3	3.8	5.5	3.8	5.7	4.0	6.0	4.0	6.4	3.9
	104	40.0	4.7	3.6	4.8	3.7	5.2	3.7	5.4	3.8	5.6	4.0	5.9	3.9	6.3	3.9
	110	43.0	4.6	3.6	4.7	3.7	5.0	3.7	5.2	3.7	5.4	3.9	5.8	3.9	6.2	3.8
63 (7.1)	68	20.0	6.9	4.9	7.1	5.1	7.6	5.1	7.9	5.1	8.2	5.3	8.7	5.3	9.3	5.2
	73	22.5	6.7	4.9	7.0	5.0	7.5	5.0	7.8	5.1	8.0	5.3	8.6	5.2	9.1	5.1
	77	25.0	6.7	4.8	6.9	5.0	7.4	5.0	7.6	5.0	7.9	5.2	8.4	5.1	8.9	5.1
	82	27.5	6.5	4.8	6.7	4.9	7.2	4.9	7.5	5.0	7.7	5.1	8.3	5.1	8.8	5.0
	86	30.0	6.4	4.7	6.6	4.8	7.1	4.8	7.3	4.9	7.6	5.1	8.1	5.0	8.7	5.0
	91	32.5	6.3	4.6	6.5	4.8	7.0	4.8	7.2	4.8	7.5	5.0	8.0	5.0	8.5	4.9
	95	35.0	6.2	4.6	6.4	4.7	6.8	4.7	7.1	4.8	7.3	5.0	7.8	4.9	8.3	4.9
	100	37.5	6.1	4.5	6.3	4.7	6.7	4.6	7.0	4.7	7.2	4.9	7.7	4.9	8.2	4.8
	104	40.0	6.0	4.5	6.1	4.6	6.6	4.6	6.8	4.7	7.1	4.9	7.5	4.8	8.0	4.7
	110	43.0	5.8	4.4	6.0	4.5	6.4	4.5	6.6	4.6	6.9	4.8	7.3	4.7	7.8	4.7

kcal/h = kW x 860, Btu/h = kW x 3,412

I4. Cooling capacity with PUHY-P700-800YSHM/PUHY-EP700-800YSHM PURY-P700-800YSHM

PFFY-P-VLRMM-E

CA : Capacity(kW) SHC : Sensible Heat Capacity(kW)

Model size (Rated kW)	Outdoor air temp.		Indoor air temp.													
			71 ˚FDB / 59˚FWB		73˚FDB / 61˚FWB		77˚FDB / 64˚FWB		81˚FDB / 66˚FWB		82˚FDB / 68˚FWB		86˚FDB / 72˚FWB		90˚FDB / 75˚FWB	
			21.5˚CDB / 15˚CWB		23˚CDB / 16˚CWB		25˚CDB / 18˚CWB		27˚CDB / 19˚CWB		28˚CDB / 20˚CWB		30˚CDB / 22˚CWB		32˚CDB / 24˚CWB	
	˚FDB	˚CDB	CA	SHC	CA	SHC	CA	SHC	CA	SHC	CA	SHC	CA	SHC	CA	SHC
20 (2.2)	68	20.0	2.1	1.7	2.2	1.7	2.4	1.7	2.4	1.8	2.5	1.8	2.7	1.8	2.9	1.8
	73	22.5	2.1	1.7	2.2	1.7	2.3	1.7	2.4	1.8	2.5	1.8	2.7	1.8	2.8	1.8
	77	25.0	2.1	1.7	2.1	1.7	2.3	1.7	2.4	1.8	2.4	1.8	2.6	1.8	2.8	1.8
	82	27.5	2.0	1.6	2.1	1.7	2.2	1.7	2.3	1.8	2.4	1.8	2.6	1.8	2.7	1.7
	86	30.0	2.0	1.6	2.1	1.7	2.2	1.7	2.3	1.8	2.4	1.8	2.5	1.8	2.7	1.7
	91	32.5	1.9	1.6	2.0	1.7	2.2	1.6	2.2	1.8	2.3	1.8	2.5	1.7	2.6	1.7
	95	35.0	1.9	1.6	2.0	1.6	2.1	1.6	2.2	1.7	2.3	1.7	2.4	1.7	2.6	1.7
	100	37.5	1.9	1.6	2.0	1.6	2.1	1.6	2.2	1.7	2.2	1.7	2.4	1.7	2.5	1.7
	104	40.0	1.8	1.5	1.9	1.6	2.0	1.6	2.1	1.7	2.2	1.7	2.3	1.7	2.5	1.7
	110	43.0	1.8	1.5	1.8	1.6	2.0	1.6	2.1	1.7	2.1	1.7	2.3	1.7	2.4	1.6
25 (2.8)	68	20.0	2.7	2.0	2.8	2.0	3.0	2.0	3.1	2.1	3.2	2.1	3.4	2.1	3.7	2.1
	73	22.5	2.7	1.9	2.8	2.0	3.0	2.0	3.1	2.1	3.2	2.1	3.4	2.1	3.6	2.1
	77	25.0	2.6	1.9	2.7	2.0	2.9	2.0	3.0	2.1	3.1	2.1	3.3	2.1	3.5	2.0
	82	27.5	2.6	1.9	2.7	2.0	2.9	2.0	3.0	2.1	3.1	2.1	3.3	2.0	3.5	2.0
	86	30.0	2.5	1.9	2.6	1.9	2.8	1.9	2.9	2.0	3.0	2.0	3.2	2.0	3.4	2.0
	91	32.5	2.5	1.8	2.6	1.9	2.7	1.9	2.8	2.0	2.9	2.0	3.1	2.0	3.3	2.0
	95	35.0	2.4	1.8	2.5	1.9	2.7	1.9	2.8	2.0	2.9	2.0	3.1	2.0	3.3	1.9
	100	37.5	2.4	1.8	2.5	1.9	2.6	1.9	2.7	2.0	2.8	2.0	3.0	1.9	3.2	1.9
	104	40.0	2.4	1.8	2.4	1.8	2.6	1.8	2.7	1.9	2.8	1.9	3.0	1.9	3.2	1.9
	110	43.0	2.3	1.8	2.4	1.8	2.5	1.8	2.6	1.9	2.7	1.9	2.9	1.9	3.1	1.9
32 (3.6)	68	20.0	3.5	2.5	3.6	2.6	3.9	2.6	4.0	2.7	4.1	2.7	4.4	2.7	4.7	2.7
	73	22.5	3.4	2.5	3.5	2.6	3.8	2.5	3.9	2.7	4.1	2.7	4.4	2.7	4.6	2.6
	77	25.0	3.4	2.5	3.5	2.5	3.7	2.5	3.9	2.7	4.0	2.7	4.2	2.6	4.5	2.6
	82	27.5	3.3	2.4	3.4	2.5	3.7	2.5	3.8	2.6	3.9	2.6	4.2	2.6	4.5	2.6
	86	30.0	3.2	2.4	3.4	2.5	3.6	2.5	3.7	2.6	3.9	2.6	4.1	2.6	4.4	2.5
	91	32.5	3.2	2.4	3.3	2.4	3.5	2.4	3.7	2.6	3.8	2.6	4.0	2.5	4.3	2.5
	95	35.0	3.1	2.3	3.2	2.4	3.5	2.4	3.6	2.5	3.7	2.5	4.0	2.5	4.2	2.5
	100	37.5	3.1	2.3	3.2	2.4	3.4	2.4	3.5	2.5	3.7	2.5	3.9	2.5	4.1	2.4
	104	40.0	3.0	2.3	3.1	2.3	3.3	2.3	3.5	2.5	3.6	2.5	3.8	2.5	4.1	2.4
	110	43.0	3.0	2.2	3.0	2.3	3.2	2.3	3.4	2.4	3.5	2.4	3.7	2.4	4.0	2.4
40 (4.5)	68	20.0	4.3	3.1	4.5	3.2	4.8	3.2	5.0	3.4	5.2	3.4	5.5	3.4	5.9	3.3
	73	22.5	4.3	3.1	4.4	3.2	4.7	3.2	4.9	3.4	5.1	3.4	5.4	3.4	5.8	3.3
	77	25.0	4.2	3.1	4.4	3.2	4.7	3.2	4.8	3.4	5.0	3.3	5.3	3.3	5.7	3.3
	82	27.5	4.1	3.0	4.3	3.1	4.6	3.1	4.7	3.3	4.9	3.3	5.2	3.3	5.6	3.2
	86	30.0	4.1	3.0	4.2	3.1	4.5	3.1	4.7	3.3	4.8	3.3	5.1	3.2	5.5	3.2
	91	32.5	4.0	3.0	4.1	3.1	4.4	3.0	4.6	3.2	4.7	3.2	5.0	3.2	5.4	3.2
	95	35.0	3.9	2.9	4.1	3.0	4.3	3.0	4.5	3.2	4.6	3.2	5.0	3.2	5.3	3.1
	100	37.5	3.8	2.9	4.0	3.0	4.3	3.0	4.4	3.2	4.6	3.2	4.9	3.1	5.2	3.1
	104	40.0	3.8	2.9	3.9	2.9	4.2	2.9	4.3	3.1	4.5	3.1	4.8	3.1	5.1	3.0
	110	43.0	3.7	2.8	3.8	2.9	4.1	2.9	4.2	3.1	4.4	3.1	4.7	3.0	5.0	3.0
50 (5.6)	68	20.0	5.4	4.0	5.6	4.1	6.0	4.1	6.2	4.3	6.4	4.3	6.9	4.3	7.3	4.2
	73	22.5	5.3	3.9	5.5	4.1	5.9	4.0	6.1	4.3	6.3	4.3	6.8	4.2	7.2	4.2
	77	25.0	5.3	3.9	5.4	4.0	5.8	4.0	6.0	4.2	6.2	4.2	6.6	4.2	7.1	4.1
	82	27.5	5.2	3.8	5.3	4.0	5.7	4.0	5.9	4.2	6.1	4.2	6.5	4.1	6.9	4.1
	86	30.0	5.0	3.8	5.2	3.9	5.6	3.9	5.8	4.1	6.0	4.1	6.4	4.1	6.8	4.0
	91	32.5	5.0	3.7	5.1	3.9	5.5	3.9	5.7	4.1	5.9	4.1	6.3	4.0	6.7	4.0
	95	35.0	4.9	3.7	5.0	3.8	5.4	3.8	5.6	4.1	5.8	4.0	6.2	4.0	6.6	3.9
	100	37.5	4.8	3.7	5.0	3.8	5.3	3.8	5.5	4.0	5.7	4.0	6.0	4.0	6.4	3.9
	104	40.0	4.7	3.6	4.8	3.7	5.2	3.7	5.4	4.0	5.6	4.0	5.9	3.9	6.3	3.9
	110	43.0	4.6	3.6	4.7	3.7	5.0	3.7	5.2	3.9	5.4	3.9	5.8	3.9	6.2	3.8
63 (7.1)	68	20.0	6.9	4.9	7.1	5.1	7.6	5.1	7.9	5.4	8.2	5.3	8.7	5.3	9.3	5.2
	73	22.5	6.7	4.9	7.0	5.0	7.5	5.0	7.8	5.3	8.0	5.3	8.6	5.2	9.1	5.1
	77	25.0	6.7	4.8	6.9	5.0	7.4	5.0	7.6	5.2	7.9	5.2	8.4	5.1	8.9	5.1
	82	27.5	6.5	4.8	6.7	4.9	7.2	4.9	7.5	5.2	7.7	5.1	8.3	5.1	8.8	5.0
	86	30.0	6.4	4.7	6.6	4.8	7.1	4.8	7.3	5.1	7.6	5.1	8.1	5.0	8.7	5.0
	91	32.5	6.3	4.6	6.5	4.8	7.0	4.8	7.2	5.0	7.5	5.0	8.0	5.0	8.5	4.9
	95	35.0	6.2	4.6	6.4	4.7	6.8	4.7	7.1	5.0	7.3	5.0	7.8	4.9	8.3	4.9
	100	37.5	6.1	4.5	6.3	4.7	6.7	4.6	7.0	4.9	7.2	4.9	7.7	4.9	8.2	4.8
	104	40.0	6.0	4.5	6.1	4.6	6.6	4.6	6.8	4.9	7.1	4.9	7.5	4.8	8.0	4.7
	110	43.0	5.8	4.4	6.0	4.5	6.4	4.5	6.6	4.8	6.9	4.8	7.3	4.7	7.8	4.7

kcal/h = kW x 860, Btu/h = kW x 3,412

CT

I5. Cooling capacity with PUHY-P850-1250YSHM/PUHY-EP850-900YSHM

PFFY-P-VKM-E

CA : Capacity(kW) SHC : Sensible Heat Capacity(kW)

Model size (Rated kW)	Outdoor air temp.		Indoor air temp.													
			71 ˚FDB / 59˚FWB		73˚FDB / 61˚FWB		77˚FDB / 64˚FWB		81˚FDB / 66˚FWB		82˚FDB / 68˚FWB		86˚FDB / 72˚FWB		90˚FDB / 75˚FWB	
			21.5˚CDB / 15˚CWB		23˚CDB / 16˚CWB		25˚CDB / 18˚CWB		27˚CDB / 19˚CWB		28˚CDB / 20˚CWB		30˚CDB / 22˚CWB		32˚CDB / 24˚CWB	
	˚FDB	˚CDB	CA	SHC	CA	SHC	CA	SHC	CA	SHC	CA	SHC	CA	SHC	CA	SHC
20 (2.2)	68	20.0	2.1	1.7	2.1	1.7	2.3	1.7	2.4	1.8	2.4	1.8	2.6	1.8	2.8	1.8
	73	22.5	2.1	1.7	2.1	1.7	2.3	1.7	2.3	1.8	2.4	1.8	2.6	1.8	2.7	1.8
	77	25.0	2.0	1.6	2.1	1.7	2.2	1.7	2.3	1.8	2.4	1.8	2.6	1.8	2.7	1.8
	82	27.5	2.0	1.6	2.1	1.7	2.2	1.7	2.3	1.8	2.4	1.8	2.5	1.8	2.7	1.7
	86	30.0	2.0	1.6	2.0	1.7	2.2	1.7	2.3	1.8	2.3	1.8	2.5	1.8	2.7	1.7
	91	32.5	2.0	1.6	2.0	1.7	2.2	1.7	2.2	1.8	2.3	1.8	2.5	1.8	2.6	1.7
	95	35.0	1.9	1.6	2.0	1.7	2.1	1.6	2.2	1.8	2.3	1.8	2.5	1.7	2.6	1.7
	100	37.5	1.9	1.6	2.0	1.6	2.1	1.6	2.2	1.8	2.3	1.8	2.4	1.7	2.6	1.7
	104	40.0	1.9	1.6	1.9	1.6	2.1	1.6	2.2	1.7	2.2	1.7	2.4	1.7	2.6	1.7
	110	43.0	1.9	1.6	1.9	1.6	2.1	1.6	2.1	1.7	2.2	1.7	2.4	1.7	2.5	1.7
25 (2.8)	68	20.0	2.6	2.0	2.7	2.0	2.9	2.0	3.0	2.1	3.1	2.1	3.3	2.1	3.5	2.1
	73	22.5	2.6	2.0	2.7	2.0	2.9	2.0	3.0	2.1	3.1	2.1	3.3	2.1	3.5	2.1
	77	25.0	2.6	2.0	2.7	2.0	2.9	2.0	2.9	2.1	3.0	2.1	3.2	2.1	3.4	2.1
	82	27.5	2.6	1.9	2.6	2.0	2.8	2.0	2.9	2.1	3.0	2.1	3.2	2.1	3.4	2.1
	86	30.0	2.5	1.9	2.6	2.0	2.8	2.0	2.9	2.1	3.0	2.1	3.2	2.1	3.4	2.0
	91	32.5	2.5	1.9	2.6	2.0	2.7	2.0	2.8	2.1	2.9	2.1	3.2	2.1	3.4	2.0
	95	35.0	2.5	1.9	2.5	1.9	2.7	1.9	2.8	2.1	2.9	2.1	3.1	2.1	3.3	2.0
	100	37.5	2.5	1.9	2.5	1.9	2.7	1.9	2.8	2.1	2.9	2.1	3.1	2.0	3.3	2.0
	104	40.0	2.4	1.9	2.5	1.9	2.6	1.9	2.7	2.0	2.9	2.0	3.1	2.0	3.3	2.0
	110	43.0	2.4	1.9	2.4	1.9	2.6	1.9	2.7	2.0	2.8	2.0	3.0	2.0	3.2	2.0
32 (3.6)	68	20.0	3.4	2.4	3.5	2.5	3.7	2.5	3.9	2.6	4.0	2.6	4.2	2.6	4.5	2.5
	73	22.5	3.4	2.4	3.5	2.5	3.7	2.4	3.8	2.6	4.0	2.6	4.2	2.5	4.5	2.5
	77	25.0	3.3	2.4	3.4	2.4	3.7	2.4	3.8	2.6	3.9	2.6	4.2	2.5	4.4	2.5
	82	27.5	3.3	2.4	3.4	2.4	3.6	2.4	3.7	2.5	3.9	2.5	4.1	2.5	4.4	2.5
	86	30.0	3.3	2.3	3.3	2.4	3.6	2.4	3.7	2.5	3.8	2.5	4.1	2.5	4.3	2.5
	91	32.5	3.2	2.3	3.3	2.4	3.5	2.4	3.7	2.5	3.8	2.5	4.1	2.5	4.3	2.4
	95	35.0	3.2	2.3	3.3	2.3	3.5	2.3	3.6	2.5	3.8	2.5	4.0	2.5	4.3	2.4
	100	37.5	3.2	2.3	3.2	2.3	3.4	2.3	3.6	2.5	3.7	2.5	4.0	2.4	4.2	2.4
	104	40.0	3.1	2.3	3.2	2.3	3.4	2.3	3.5	2.4	3.7	2.4	3.9	2.4	4.2	2.4
	110	43.0	3.1	2.2	3.1	2.3	3.4	2.3	3.5	2.4	3.6	2.4	3.9	2.4	4.2	2.4
40 (4.5)	68	20.0	4.3	3.0	4.4	3.0	4.7	3.0	4.8	3.2	5.0	3.2	5.3	3.2	5.6	3.1
	73	22.5	4.2	3.0	4.3	3.0	4.6	3.0	4.8	3.2	4.9	3.2	5.3	3.1	5.6	3.1
	77	25.0	4.2	2.9	4.3	3.0	4.6	3.0	4.7	3.1	4.9	3.1	5.2	3.1	5.5	3.1
	82	27.5	4.1	2.9	4.2	3.0	4.5	3.0	4.7	3.1	4.8	3.1	5.2	3.1	5.5	3.0
	86	30.0	4.1	2.9	4.2	2.9	4.5	2.9	4.6	3.1	4.8	3.1	5.1	3.1	5.4	3.0
	91	32.5	4.0	2.9	4.1	2.9	4.4	2.9	4.6	3.1	4.7	3.1	5.1	3.1	5.4	3.0
	95	35.0	4.0	2.8	4.1	2.9	4.4	2.9	4.5	3.1	4.7	3.1	5.0	3.0	5.3	3.0
	100	37.5	3.9	2.8	4.0	2.9	4.3	2.9	4.5	3.0	4.6	3.0	5.0	3.0	5.3	3.0
	104	40.0	3.9	2.8	4.0	2.8	4.3	2.8	4.4	3.0	4.6	3.0	4.9	3.0	5.2	2.9
	110	43.0	3.8	2.8	3.9	2.8	4.2	2.8	4.4	3.0	4.5	3.0	4.9	3.0	5.2	2.9

kcal/h = kW x 860, Btu/h = kW x 3,412

I5. Cooling capacity with PUHY-P850-1250YSHM/PUHY-EP850-900YSHM

PFFY-P-VLEM-E,VLRM-E

CA : Capacity(kW) SHC : Sensible Heat Capacity(kW)

Model size (Rated kW)	Outdoor air temp.		Indoor air temp.													
			71 ˚FDB / 59˚FWB		73˚FDB / 61˚FWB		77˚FDB / 64˚FWB		81˚FDB / 66˚FWB		82˚FDB / 68˚FWB		86˚FDB / 72˚FWB		90˚FDB / 75˚FWB	
			21.5˚CDB / 15˚CWB		23˚CDB / 16˚CWB		25˚CDB / 18˚CWB		27˚CDB / 19˚CWB		28˚CDB / 20˚CWB		30˚CDB / 22˚CWB		32˚CDB / 24˚CWB	
	˚FDB	˚CDB	CA	SHC	CA	SHC	CA	SHC	CA	SHC	CA	SHC	CA	SHC	CA	SHC
20 (2.2)	68	20.0	2.1	1.7	2.1	1.7	2.3	1.7	2.4	1.8	2.4	1.8	2.6	1.8	2.8	1.8
	73	22.5	2.1	1.6	2.1	1.7	2.3	1.7	2.3	1.8	2.4	1.8	2.6	1.8	2.7	1.8
	77	25.0	2.0	1.6	2.1	1.7	2.2	1.7	2.3	1.8	2.4	1.8	2.6	1.8	2.7	1.7
	82	27.5	2.0	1.6	2.1	1.7	2.2	1.7	2.3	1.8	2.4	1.8	2.5	1.8	2.7	1.7
	86	30.0	2.0	1.6	2.0	1.7	2.2	1.7	2.3	1.8	2.3	1.8	2.5	1.8	2.7	1.7
	91	32.5	2.0	1.6	2.0	1.7	2.2	1.6	2.2	1.8	2.3	1.8	2.5	1.7	2.6	1.7
	95	35.0	1.9	1.6	2.0	1.6	2.1	1.6	2.2	1.8	2.3	1.7	2.5	1.7	2.6	1.7
	100	37.5	1.9	1.6	2.0	1.6	2.1	1.6	2.2	1.7	2.3	1.7	2.4	1.7	2.6	1.7
	104	40.0	1.9	1.6	1.9	1.6	2.1	1.6	2.2	1.7	2.2	1.7	2.4	1.7	2.6	1.7
	110	43.0	1.9	1.6	1.9	1.6	2.1	1.6	2.1	1.7	2.2	1.7	2.4	1.7	2.5	1.7
25 (2.8)	68	20.0	2.6	1.9	2.7	2.0	2.9	2.0	3.0	2.1	3.1	2.1	3.3	2.1	3.5	2.0
	73	22.5	2.6	1.9	2.7	2.0	2.9	2.0	3.0	2.1	3.1	2.1	3.3	2.0	3.5	2.0
	77	25.0	2.6	1.9	2.7	2.0	2.9	1.9	2.9	2.1	3.0	2.1	3.2	2.0	3.4	2.0
	82	27.5	2.6	1.9	2.6	1.9	2.8	1.9	2.9	2.0	3.0	2.0	3.2	2.0	3.4	2.0
	86	30.0	2.5	1.9	2.6	1.9	2.8	1.9	2.9	2.0	3.0	2.0	3.2	2.0	3.4	2.0
	91	32.5	2.5	1.9	2.6	1.9	2.7	1.9	2.8	2.0	2.9	2.0	3.2	2.0	3.4	2.0
	95	35.0	2.5	1.9	2.5	1.9	2.7	1.9	2.8	2.0	2.9	2.0	3.1	2.0	3.3	2.0
	100	37.5	2.5	1.8	2.5	1.9	2.7	1.9	2.8	2.0	2.9	2.0	3.1	2.0	3.3	2.0
	104	40.0	2.4	1.8	2.5	1.9	2.6	1.9	2.7	2.0	2.9	2.0	3.1	2.0	3.3	1.9
	110	43.0	2.4	1.8	2.4	1.8	2.6	1.8	2.7	2.0	2.8	2.0	3.0	1.9	3.2	1.9
32 (3.6)	68	20.0	3.4	2.5	3.5	2.5	3.7	2.5	3.9	2.7	4.0	2.7	4.2	2.6	4.5	2.6
	73	22.5	3.4	2.5	3.5	2.5	3.7	2.5	3.8	2.6	4.0	2.6	4.2	2.6	4.5	2.6
	77	25.0	3.3	2.4	3.4	2.5	3.7	2.5	3.8	2.6	3.9	2.6	4.2	2.6	4.4	2.6
	82	27.5	3.3	2.4	3.4	2.5	3.6	2.5	3.7	2.6	3.9	2.6	4.1	2.6	4.4	2.5
	86	30.0	3.3	2.4	3.3	2.5	3.6	2.4	3.7	2.6	3.8	2.6	4.1	2.6	4.3	2.5
	91	32.5	3.2	2.4	3.3	2.4	3.5	2.4	3.7	2.6	3.8	2.6	4.1	2.5	4.3	2.5
	95	35.0	3.2	2.4	3.3	2.4	3.5	2.4	3.6	2.6	3.8	2.6	4.0	2.5	4.3	2.5
	100	37.5	3.2	2.3	3.2	2.4	3.4	2.4	3.6	2.5	3.7	2.5	4.0	2.5	4.2	2.5
	104	40.0	3.1	2.3	3.2	2.4	3.4	2.4	3.5	2.5	3.7	2.5	3.9	2.5	4.2	2.5
	110	43.0	3.1	2.3	3.1	2.4	3.4	2.3	3.5	2.5	3.6	2.5	3.9	2.5	4.2	2.5
40 (4.5)	68	20.0	4.3	3.1	4.4	3.2	4.7	3.2	4.8	3.3	5.0	3.3	5.3	3.3	5.6	3.3
	73	22.5	4.2	3.1	4.3	3.2	4.6	3.1	4.8	3.3	4.9	3.3	5.3	3.3	5.6	3.2
	77	25.0	4.2	3.1	4.3	3.1	4.6	3.1	4.7	3.3	4.9	3.3	5.2	3.3	5.5	3.2
	82	27.5	4.1	3.0	4.2	3.1	4.5	3.1	4.7	3.3	4.8	3.3	5.2	3.2	5.5	3.2
	86	30.0	4.1	3.0	4.2	3.1	4.5	3.1	4.6	3.3	4.8	3.2	5.1	3.2	5.4	3.2
	91	32.5	4.0	3.0	4.1	3.1	4.4	3.0	4.6	3.2	4.7	3.2	5.1	3.2	5.4	3.2
	95	35.0	4.0	3.0	4.1	3.0	4.4	3.0	4.5	3.2	4.7	3.2	5.0	3.2	5.3	3.1
	100	37.5	3.9	2.9	4.0	3.0	4.3	3.0	4.5	3.2	4.6	3.2	5.0	3.2	5.3	3.1
	104	40.0	3.9	2.9	4.0	3.0	4.3	3.0	4.4	3.2	4.6	3.2	4.9	3.1	5.2	3.1
	110	43.0	3.8	2.9	3.9	3.0	4.2	3.0	4.4	3.1	4.5	3.1	4.9	3.1	5.2	3.1
50 (5.6)	68	20.0	5.3	3.9	5.4	4.0	5.8	4.0	6.0	4.2	6.2	4.2	6.6	4.2	7.0	4.1
	73	22.5	5.2	3.9	5.4	4.0	5.8	4.0	5.9	4.2	6.1	4.2	6.6	4.2	7.0	4.1
	77	25.0	5.2	3.9	5.3	4.0	5.7	3.9	5.9	4.2	6.1	4.2	6.5	4.1	6.9	4.1
	82	27.5	5.1	3.8	5.3	3.9	5.6	3.9	5.8	4.2	6.0	4.1	6.4	4.1	6.8	4.0
	86	30.0	5.1	3.8	5.2	3.9	5.6	3.9	5.8	4.1	5.9	4.1	6.4	4.1	6.7	4.0
	91	32.5	5.0	3.8	5.1	3.9	5.5	3.9	5.7	4.1	5.9	4.1	6.3	4.1	6.7	4.0
	95	35.0	5.0	3.8	5.1	3.8	5.4	3.8	5.6	4.1	5.8	4.1	6.3	4.0	6.7	4.0
	100	37.5	4.9	3.7	5.0	3.8	5.4	3.8	5.6	4.0	5.8	4.0	6.2	4.0	6.6	4.0
	104	40.0	4.8	3.7	4.9	3.8	5.3	3.8	5.5	4.0	5.7	4.0	6.1	4.0	6.5	3.9
	110	43.0	4.8	3.7	4.9	3.7	5.2	3.7	5.4	4.0	5.6	4.0	6.0	4.0	6.5	3.9
63 (7.1)	68	20.0	6.7	4.9	6.9	5.0	7.4	5.0	7.6	5.2	7.9	5.2	8.4	5.1	8.9	5.1
	73	22.5	6.6	4.8	6.8	4.9	7.3	4.9	7.5	5.2	7.8	5.2	8.3	5.1	8.8	5.0
	77	25.0	6.6	4.8	6.7	4.9	7.2	4.9	7.5	5.2	7.7	5.1	8.2	5.1	8.7	5.0
	82	27.5	6.5	4.7	6.7	4.9	7.1	4.8	7.4	5.1	7.6	5.1	8.2	5.1	8.7	5.0
	86	30.0	6.4	4.7	6.6	4.8	7.1	4.8	7.3	5.1	7.5	5.1	8.1	5.0	8.6	4.9
	91	32.5	6.4	4.7	6.5	4.8	7.0	4.8	7.2	5.0	7.5	5.0	8.0	5.0	8.5	4.9
	95	35.0	6.3	4.6	6.4	4.7	6.9	4.7	7.1	5.0	7.4	5.0	7.9	5.0	8.4	4.9
	100	37.5	6.2	4.6	6.3	4.7	6.8	4.7	7.0	5.0	7.3	5.0	7.8	4.9	8.4	4.9
	104	40.0	6.1	4.6	6.2	4.7	6.7	4.6	7.0	4.9	7.2	4.9	7.8	4.9	8.3	4.8
	110	43.0	6.1	4.5	6.2	4.6	6.6	4.6	6.9	4.9	7.2	4.9	7.7	4.9	8.2	4.8

kcal/h = kW x 860, Btu/h = kW x 3,412

CT

I5. Cooling capacity with PUHY-P850-1250YSHM/PUHY-EP850-900YSHM

PFFY-P-VLRMM-E

CA : Capacity(kW) SHC : Sensible Heat Capacity(kW)

Model size (Rated kW)	Outdoor air temp.		Indoor air temp.													
			71 ˚FDB / 59˚FWB		73˚FDB / 61˚FWB		77˚FDB / 64˚FWB		81˚FDB / 66˚FWB		82˚FDB / 68˚FWB		86˚FDB / 72˚FWB		90˚FDB / 75˚FWB	
			21.5˚CDB / 15˚CWB		23˚CDB / 16˚CWB		25˚CDB / 18˚CWB		27˚CDB / 19˚CWB		28˚CDB / 20˚CWB		30˚CDB / 22˚CWB		32˚CDB / 24˚CWB	
	˚FDB	˚CDB	CA	SHC	CA	SHC	CA	SHC	CA	SHC	CA	SHC	CA	SHC	CA	SHC
20 (2.2)	68	20.0	2.1	1.7	2.1	1.7	2.3	1.7	2.4	1.8	2.4	1.8	2.6	1.8	2.8	1.8
	73	22.5	2.1	1.6	2.1	1.7	2.3	1.7	2.3	1.8	2.4	1.8	2.6	1.8	2.7	1.8
	77	25.0	2.0	1.6	2.1	1.7	2.2	1.7	2.3	1.8	2.4	1.8	2.6	1.8	2.7	1.7
	82	27.5	2.0	1.6	2.1	1.7	2.2	1.7	2.3	1.8	2.4	1.8	2.5	1.8	2.7	1.7
	86	30.0	2.0	1.6	2.0	1.7	2.2	1.7	2.3	1.8	2.3	1.8	2.5	1.8	2.7	1.7
	91	32.5	2.0	1.6	2.0	1.7	2.2	1.6	2.2	1.8	2.3	1.8	2.5	1.7	2.6	1.7
	95	35.0	1.9	1.6	2.0	1.6	2.1	1.6	2.2	1.8	2.3	1.7	2.5	1.7	2.6	1.7
	100	37.5	1.9	1.6	2.0	1.6	2.1	1.6	2.2	1.7	2.3	1.7	2.4	1.7	2.6	1.7
	104	40.0	1.9	1.6	1.9	1.6	2.1	1.6	2.2	1.7	2.2	1.7	2.4	1.7	2.6	1.7
	110	43.0	1.9	1.6	1.9	1.6	2.1	1.6	2.1	1.7	2.2	1.7	2.4	1.7	2.5	1.7
25 (2.8)	68	20.0	2.6	1.9	2.7	2.0	2.9	2.0	3.0	2.1	3.1	2.1	3.3	2.1	3.5	2.0
	73	22.5	2.6	1.9	2.7	2.0	2.9	2.0	3.0	2.1	3.1	2.1	3.3	2.0	3.5	2.0
	77	25.0	2.6	1.9	2.7	2.0	2.9	1.9	2.9	2.1	3.0	2.1	3.2	2.0	3.4	2.0
	82	27.5	2.6	1.9	2.6	1.9	2.8	1.9	2.9	2.0	3.0	2.0	3.2	2.0	3.4	2.0
	86	30.0	2.5	1.9	2.6	1.9	2.8	1.9	2.9	2.0	3.0	2.0	3.2	2.0	3.4	2.0
	91	32.5	2.5	1.9	2.6	1.9	2.7	1.9	2.8	2.0	2.9	2.0	3.2	2.0	3.4	2.0
	95	35.0	2.5	1.9	2.5	1.9	2.7	1.9	2.8	2.0	2.9	2.0	3.1	2.0	3.3	2.0
	100	37.5	2.5	1.8	2.5	1.9	2.7	1.9	2.8	2.0	2.9	2.0	3.1	2.0	3.3	2.0
	104	40.0	2.4	1.8	2.5	1.9	2.6	1.9	2.7	2.0	2.9	2.0	3.1	2.0	3.3	1.9
	110	43.0	2.4	1.8	2.4	1.8	2.6	1.8	2.7	2.0	2.8	2.0	3.0	1.9	3.2	1.9
32 (3.6)	68	20.0	3.4	2.5	3.5	2.5	3.7	2.5	3.9	2.7	4.0	2.7	4.2	2.6	4.5	2.6
	73	22.5	3.4	2.5	3.5	2.5	3.7	2.5	3.8	2.6	4.0	2.6	4.2	2.6	4.5	2.6
	77	25.0	3.3	2.4	3.4	2.5	3.7	2.5	3.8	2.6	3.9	2.6	4.2	2.6	4.4	2.6
	82	27.5	3.3	2.4	3.4	2.5	3.6	2.5	3.7	2.6	3.9	2.6	4.1	2.6	4.4	2.5
	86	30.0	3.3	2.4	3.3	2.5	3.6	2.4	3.7	2.6	3.8	2.6	4.1	2.6	4.3	2.5
	91	32.5	3.2	2.4	3.3	2.4	3.5	2.4	3.7	2.6	3.8	2.6	4.1	2.5	4.3	2.5
	95	35.0	3.2	2.4	3.3	2.4	3.5	2.4	3.6	2.6	3.8	2.6	4.0	2.5	4.3	2.5
	100	37.5	3.2	2.3	3.2	2.4	3.4	2.4	3.6	2.5	3.7	2.5	4.0	2.5	4.2	2.5
	104	40.0	3.1	2.3	3.2	2.4	3.4	2.4	3.5	2.5	3.7	2.5	3.9	2.5	4.2	2.5
	110	43.0	3.1	2.3	3.1	2.4	3.4	2.3	3.5	2.5	3.6	2.5	3.9	2.5	4.2	2.5
40 (4.5)	68	20.0	4.3	3.1	4.4	3.2	4.7	3.2	4.8	3.3	5.0	3.3	5.3	3.3	5.6	3.3
	73	22.5	4.2	3.1	4.3	3.2	4.6	3.1	4.8	3.3	4.9	3.3	5.3	3.3	5.6	3.2
	77	25.0	4.2	3.1	4.3	3.1	4.6	3.1	4.7	3.3	4.9	3.3	5.2	3.3	5.5	3.2
	82	27.5	4.1	3.0	4.2	3.1	4.5	3.1	4.7	3.3	4.8	3.3	5.2	3.2	5.5	3.2
	86	30.0	4.1	3.0	4.2	3.1	4.5	3.1	4.6	3.3	4.8	3.2	5.1	3.2	5.4	3.2
	91	32.5	4.0	3.0	4.1	3.1	4.4	3.0	4.6	3.2	4.7	3.2	5.1	3.2	5.4	3.2
	95	35.0	4.0	3.0	4.1	3.0	4.4	3.0	4.5	3.2	4.7	3.2	5.0	3.2	5.3	3.1
	100	37.5	3.9	2.9	4.0	3.0	4.3	3.0	4.5	3.2	4.6	3.2	5.0	3.2	5.3	3.1
	104	40.0	3.9	2.9	4.0	3.0	4.3	3.0	4.4	3.2	4.6	3.2	4.9	3.1	5.2	3.1
	110	43.0	3.8	2.9	3.9	3.0	4.2	3.0	4.4	3.1	4.5	3.1	4.9	3.1	5.2	3.1
50 (5.6)	68	20.0	5.3	3.9	5.4	4.0	5.8	4.0	6.0	4.2	6.2	4.2	6.6	4.2	7.0	4.1
	73	22.5	5.2	3.9	5.4	4.0	5.8	4.0	5.9	4.2	6.1	4.2	6.6	4.2	7.0	4.1
	77	25.0	5.2	3.9	5.3	4.0	5.7	3.9	5.9	4.2	6.1	4.2	6.5	4.1	6.9	4.1
	82	27.5	5.1	3.8	5.3	3.9	5.6	3.9	5.8	4.2	6.0	4.1	6.4	4.1	6.8	4.0
	86	30.0	5.1	3.8	5.2	3.9	5.6	3.9	5.8	4.1	5.9	4.1	6.4	4.1	6.7	4.0
	91	32.5	5.0	3.8	5.1	3.9	5.5	3.9	5.7	4.1	5.9	4.1	6.3	4.1	6.7	4.0
	95	35.0	5.0	3.8	5.1	3.8	5.4	3.8	5.6	4.1	5.8	4.1	6.3	4.0	6.7	4.0
	100	37.5	4.9	3.7	5.0	3.8	5.4	3.8	5.6	4.0	5.8	4.0	6.2	4.0	6.6	4.0
	104	40.0	4.8	3.7	4.9	3.8	5.3	3.8	5.5	4.0	5.7	4.0	6.1	4.0	6.5	3.9
	110	43.0	4.8	3.7	4.9	3.7	5.2	3.7	5.4	4.0	5.6	4.0	6.0	4.0	6.5	3.9
63 (7.1)	68	20.0	6.7	4.9	6.9	5.0	7.4	5.0	7.6	5.2	7.9	5.2	8.4	5.1	8.9	5.1
	73	22.5	6.6	4.8	6.8	4.9	7.3	4.9	7.5	5.2	7.8	5.2	8.3	5.1	8.8	5.0
	77	25.0	6.6	4.8	6.7	4.9	7.2	4.9	7.5	5.2	7.7	5.1	8.2	5.1	8.7	5.0
	82	27.5	6.5	4.7	6.7	4.9	7.1	4.8	7.4	5.1	7.6	5.1	8.2	5.1	8.7	5.0
	86	30.0	6.4	4.7	6.6	4.8	7.1	4.8	7.3	5.1	7.5	5.1	8.1	5.0	8.6	4.9
	91	32.5	6.4	4.7	6.5	4.8	7.0	4.8	7.2	5.0	7.5	5.0	8.0	5.0	8.5	4.9
	95	35.0	6.3	4.6	6.4	4.7	6.9	4.7	7.1	5.0	7.4	5.0	7.9	5.0	8.4	4.9
	100	37.5	6.2	4.6	6.3	4.7	6.8	4.7	7.0	5.0	7.3	5.0	7.8	4.9	8.4	4.9
	104	40.0	6.1	4.6	6.2	4.7	6.7	4.6	7.0	4.9	7.2	4.9	7.8	4.9	8.3	4.8
	110	43.0	6.1	4.5	6.2	4.6	6.6	4.6	6.9	4.9	7.2	4.9	7.7	4.9	8.2	4.8

kcal/h = kW x 860, Btu/h = kW x 3,412

I6. Cooling capacity with PUHY-HP200-500Y(S)HM

PFFY-P-VKM-E

CA : Capacity(kW) SHC : Sensible Heat Capacity(kW)

Model size (Rated kW)	Outdoor air temp.		Indoor air temp.													
			71 ˚FDB / 59˚FWB		73˚FDB / 61˚FWB		77˚FDB / 64˚FWB		81˚FDB / 66˚FWB		82˚FDB / 68˚FWB		86˚FDB / 72˚FWB		90˚FDB / 75˚FWB	
			21.5˚CDB / 15˚CWB		23˚CDB / 16˚CWB		25˚CDB / 18˚CWB		27˚CDB / 19˚CWB		28˚CDB / 20˚CWB		30˚CDB / 22˚CWB		32˚CDB / 24˚CWB	
	˚FDB	˚CDB	CA	SHC	CA	SHC	CA	SHC	CA	SHC	CA	SHC	CA	SHC	CA	SHC
20 (2.2)	68	20.0	1.9	1.6	2.1	1.7	2.2	1.7	2.4	1.8	2.4	1.8	2.6	1.8	2.7	1.8
	73	22.5	1.9	1.6	2.1	1.7	2.2	1.7	2.4	1.8	2.4	1.8	2.6	1.8	2.7	1.8
	77	25.0	1.9	1.6	2.1	1.7	2.2	1.7	2.4	1.8	2.4	1.8	2.6	1.8	2.7	1.8
	82	27.5	1.9	1.6	2.1	1.7	2.2	1.7	2.3	1.8	2.4	1.8	2.5	1.8	2.6	1.7
	86	30.0	1.9	1.6	2.0	1.7	2.2	1.7	2.3	1.8	2.4	1.8	2.5	1.8	2.6	1.7
	91	32.5	1.9	1.6	2.0	1.7	2.1	1.6	2.2	1.8	2.3	1.8	2.4	1.7	2.5	1.7
	95	35.0	1.9	1.6	2.0	1.7	2.1	1.6	2.2	1.8	2.3	1.8	2.4	1.7	2.5	1.7
	100	37.5	1.9	1.6	2.0	1.6	2.1	1.6	2.2	1.7	2.2	1.7	2.3	1.7	2.4	1.7
	104	40.0	1.9	1.6	1.9	1.6	2.0	1.6	2.1	1.7	2.2	1.7	2.3	1.7	2.4	1.6
	110	43.0	1.9	1.6	1.9	1.6	2.0	1.6	2.1	1.7	2.1	1.7	2.2	1.7	2.3	1.6
25 (2.8)	68	20.0	2.5	1.9	2.7	2.0	2.8	2.0	3.0	2.1	3.1	2.1	3.3	2.1	3.5	2.1
	73	22.5	2.5	1.9	2.7	2.0	2.8	2.0	3.0	2.1	3.1	2.1	3.3	2.1	3.5	2.1
	77	25.0	2.5	1.9	2.7	2.0	2.8	2.0	3.0	2.1	3.1	2.1	3.3	2.1	3.4	2.1
	82	27.5	2.5	1.9	2.6	2.0	2.8	2.0	2.9	2.1	3.0	2.1	3.2	2.1	3.4	2.0
	86	30.0	2.4	1.9	2.6	2.0	2.8	2.0	2.9	2.1	3.0	2.1	3.1	2.1	3.3	2.0
	91	32.5	2.4	1.9	2.6	2.0	2.7	1.9	2.8	2.1	2.9	2.1	3.1	2.0	3.2	2.0
	95	35.0	2.4	1.9	2.5	2.0	2.7	1.9	2.8	2.1	2.9	2.1	3.0	2.0	3.2	2.0
	100	37.5	2.4	1.9	2.5	1.9	2.6	1.9	2.8	2.0	2.8	2.0	3.0	2.0	3.1	1.9
	104	40.0	2.4	1.9	2.5	1.9	2.6	1.9	2.7	2.0	2.8	2.0	2.9	2.0	3.0	1.9
	110	43.0	2.4	1.8	2.4	1.9	2.6	1.9	2.7	2.0	2.7	2.0	2.8	1.9	2.9	1.9
32 (3.6)	68	20.0	3.2	2.3	3.4	2.4	3.6	2.4	3.9	2.6	4.0	2.6	4.2	2.6	4.5	2.5
	73	22.5	3.2	2.3	3.4	2.4	3.6	2.4	3.9	2.6	4.0	2.6	4.2	2.6	4.5	2.5
	77	25.0	3.2	2.3	3.4	2.4	3.6	2.4	3.8	2.6	4.0	2.6	4.2	2.5	4.4	2.5
	82	27.5	3.2	2.3	3.4	2.4	3.6	2.4	3.8	2.6	3.9	2.5	4.1	2.5	4.3	2.4
	86	30.0	3.1	2.3	3.3	2.4	3.5	2.4	3.7	2.5	3.8	2.5	4.0	2.5	4.2	2.4
	91	32.5	3.1	2.3	3.3	2.4	3.5	2.3	3.7	2.5	3.8	2.5	4.0	2.4	4.1	2.4
	95	35.0	3.1	2.3	3.3	2.4	3.4	2.3	3.6	2.5	3.7	2.5	3.9	2.4	4.1	2.4
	100	37.5	3.1	2.3	3.2	2.3	3.4	2.3	3.5	2.4	3.6	2.4	3.8	2.4	4.0	2.3
	104	40.0	3.1	2.2	3.2	2.3	3.3	2.3	3.5	2.4	3.6	2.4	3.7	2.3	3.9	2.3
	110	43.0	3.0	2.2	3.1	2.3	3.3	2.2	3.4	2.4	3.5	2.4	3.6	2.3	3.8	2.2
40 (4.5)	68	20.0	4.0	2.8	4.3	3.0	4.5	3.0	4.8	3.2	5.0	3.2	5.3	3.1	5.6	3.1
	73	22.5	4.0	2.8	4.3	3.0	4.5	3.0	4.8	3.2	5.0	3.2	5.3	3.1	5.6	3.1
	77	25.0	4.0	2.8	4.3	3.0	4.5	3.0	4.8	3.2	5.0	3.2	5.3	3.1	5.5	3.1
	82	27.5	4.0	2.8	4.2	3.0	4.5	2.9	4.7	3.1	4.9	3.1	5.1	3.1	5.4	3.0
	86	30.0	3.9	2.8	4.2	3.0	4.4	2.9	4.7	3.1	4.8	3.1	5.1	3.0	5.3	3.0
	91	32.5	3.9	2.8	4.1	2.9	4.4	2.9	4.6	3.1	4.7	3.1	5.0	3.0	5.2	2.9
	95	35.0	3.9	2.8	4.1	2.9	4.3	2.9	4.5	3.0	4.6	3.0	4.9	3.0	5.1	2.9
	100	37.5	3.9	2.8	4.0	2.9	4.2	2.8	4.4	3.0	4.5	3.0	4.8	2.9	5.0	2.8
	104	40.0	3.8	2.8	4.0	2.9	4.2	2.8	4.4	3.0	4.5	3.0	4.7	2.9	4.9	2.8
	110	43.0	3.8	2.8	3.9	2.8	4.1	2.8	4.3	2.9	4.4	2.9	4.5	2.8	4.7	2.8

kcal/h = kW x 860, Btu/h = kW x 3,412

CT

I6. Cooling capacity with PUHY-HP200-500Y(S)HM

PFFY-P-VLEM-E,VLRM-E

CA : Capacity(kW) SHC : Sensible Heat Capacity(kW)

Model size (Rated kW)	Outdoor air temp.		Indoor air temp.													
			71 ˚FDB / 59˚FWB		73˚FDB / 61˚FWB		77˚FDB / 64˚FWB		81˚FDB / 66˚FWB		82˚FDB / 68˚FWB		86˚FDB / 72˚FWB		90˚FDB / 75˚FWB	
			21.5˚CDB / 15˚CWB		23˚CDB / 16˚CWB		25˚CDB / 18˚CWB		27˚CDB / 19˚CWB		28˚CDB / 20˚CWB		30˚CDB / 22˚CWB		32˚CDB / 24˚CWB	
	˚FDB	˚CDB	CA	SHC	CA	SHC	CA	SHC	CA	SHC	CA	SHC	CA	SHC	CA	SHC
20 (2.2)	68	20.0	1.9	1.6	2.1	1.7	2.2	1.7	2.4	1.8	2.4	1.8	2.6	1.8	2.7	1.8
	73	22.5	1.9	1.6	2.1	1.7	2.2	1.7	2.4	1.8	2.4	1.8	2.6	1.8	2.7	1.8
	77	25.0	1.9	1.6	2.1	1.7	2.2	1.7	2.4	1.8	2.4	1.8	2.6	1.8	2.7	1.7
	82	27.5	1.9	1.6	2.1	1.7	2.2	1.7	2.3	1.8	2.4	1.8	2.5	1.8	2.6	1.7
	86	30.0	1.9	1.6	2.0	1.7	2.2	1.6	2.3	1.8	2.4	1.8	2.5	1.7	2.6	1.7
	91	32.5	1.9	1.6	2.0	1.7	2.1	1.6	2.2	1.8	2.3	1.8	2.4	1.7	2.5	1.7
	95	35.0	1.9	1.6	2.0	1.6	2.1	1.6	2.2	1.7	2.3	1.7	2.4	1.7	2.5	1.7
	100	37.5	1.9	1.6	2.0	1.6	2.1	1.6	2.2	1.7	2.2	1.7	2.3	1.7	2.4	1.6
	104	40.0	1.9	1.6	1.9	1.6	2.0	1.6	2.1	1.7	2.2	1.7	2.3	1.7	2.4	1.6
	110	43.0	1.9	1.6	1.9	1.6	2.0	1.6	2.1	1.7	2.1	1.7	2.2	1.6	2.3	1.6
25 (2.8)	68	20.0	2.5	1.8	2.7	2.0	2.8	1.9	3.0	2.1	3.1	2.1	3.3	2.1	3.5	2.0
	73	22.5	2.5	1.8	2.7	2.0	2.8	1.9	3.0	2.1	3.1	2.1	3.3	2.1	3.5	2.0
	77	25.0	2.5	1.8	2.7	2.0	2.8	1.9	3.0	2.1	3.1	2.1	3.3	2.0	3.4	2.0
	82	27.5	2.5	1.8	2.6	1.9	2.8	1.9	2.9	2.1	3.0	2.1	3.2	2.0	3.4	2.0
	86	30.0	2.4	1.8	2.6	1.9	2.8	1.9	2.9	2.0	3.0	2.0	3.1	2.0	3.3	2.0
	91	32.5	2.4	1.8	2.6	1.9	2.7	1.9	2.8	2.0	2.9	2.0	3.1	2.0	3.2	1.9
	95	35.0	2.4	1.8	2.5	1.9	2.7	1.9	2.8	2.0	2.9	2.0	3.0	1.9	3.2	1.9
	100	37.5	2.4	1.8	2.5	1.9	2.6	1.9	2.8	2.0	2.8	2.0	3.0	1.9	3.1	1.9
	104	40.0	2.4	1.8	2.5	1.9	2.6	1.8	2.7	2.0	2.8	1.9	2.9	1.9	3.0	1.9
	110	43.0	2.4	1.8	2.4	1.8	2.6	1.8	2.7	1.9	2.7	1.9	2.8	1.9	2.9	1.8
32 (3.6)	68	20.0	3.2	2.4	3.4	2.5	3.6	2.5	3.9	2.7	4.0	2.7	4.2	2.6	4.5	2.6
	73	22.5	3.2	2.4	3.4	2.5	3.6	2.5	3.9	2.7	4.0	2.7	4.2	2.6	4.5	2.6
	77	25.0	3.2	2.4	3.4	2.5	3.6	2.5	3.8	2.7	4.0	2.6	4.2	2.6	4.4	2.6
	82	27.5	3.2	2.4	3.4	2.5	3.6	2.5	3.8	2.6	3.9	2.6	4.1	2.6	4.3	2.5
	86	30.0	3.1	2.3	3.3	2.5	3.5	2.4	3.7	2.6	3.8	2.6	4.0	2.5	4.2	2.5
	91	32.5	3.1	2.3	3.3	2.4	3.5	2.4	3.7	2.6	3.8	2.6	4.0	2.5	4.1	2.5
	95	35.0	3.1	2.3	3.3	2.4	3.4	2.4	3.6	2.6	3.7	2.5	3.9	2.5	4.1	2.4
	100	37.5	3.1	2.3	3.2	2.4	3.4	2.4	3.5	2.5	3.6	2.5	3.8	2.5	4.0	2.4
	104	40.0	3.1	2.3	3.2	2.4	3.3	2.3	3.5	2.5	3.6	2.5	3.7	2.4	3.9	2.4
	110	43.0	3.0	2.3	3.1	2.4	3.3	2.3	3.4	2.5	3.5	2.4	3.6	2.4	3.8	2.3
40 (4.5)	68	20.0	4.0	3.0	4.3	3.1	4.5	3.1	4.8	3.3	5.0	3.3	5.3	3.3	5.6	3.2
	73	22.5	4.0	3.0	4.3	3.1	4.5	3.1	4.8	3.3	5.0	3.3	5.3	3.3	5.6	3.2
	77	25.0	4.0	3.0	4.3	3.1	4.5	3.1	4.8	3.3	5.0	3.3	5.3	3.3	5.5	3.2
	82	27.5	4.0	3.0	4.2	3.1	4.5	3.1	4.7	3.3	4.9	3.3	5.1	3.2	5.4	3.2
	86	30.0	3.9	2.9	4.2	3.1	4.4	3.1	4.7	3.3	4.8	3.3	5.1	3.2	5.3	3.1
	91	32.5	3.9	2.9	4.1	3.1	4.4	3.0	4.6	3.2	4.7	3.2	5.0	3.2	5.2	3.1
	95	35.0	3.9	2.9	4.1	3.0	4.3	3.0	4.5	3.2	4.6	3.2	4.9	3.1	5.1	3.0
	100	37.5	3.9	2.9	4.0	3.0	4.2	3.0	4.4	3.2	4.5	3.1	4.8	3.1	5.0	3.0
	104	40.0	3.8	2.9	4.0	3.0	4.2	2.9	4.4	3.1	4.5	3.1	4.7	3.0	4.9	3.0
	110	43.0	3.8	2.9	3.9	3.0	4.1	2.9	4.3	3.1	4.4	3.1	4.5	3.0	4.7	2.9
50 (5.6)	68	20.0	4.9	3.7	5.3	4.0	5.6	3.9	6.0	4.2	6.2	4.2	6.6	4.2	7.0	4.1
	73	22.5	4.9	3.7	5.3	4.0	5.6	3.9	6.0	4.2	6.2	4.2	6.6	4.2	7.0	4.1
	77	25.0	4.9	3.7	5.3	4.0	5.6	3.9	6.0	4.2	6.2	4.2	6.5	4.1	6.9	4.1
	82	27.5	4.9	3.7	5.3	3.9	5.6	3.9	5.9	4.2	6.1	4.2	6.4	4.1	6.7	4.0
	86	30.0	4.9	3.7	5.2	3.9	5.5	3.9	5.8	4.1	6.0	4.1	6.3	4.1	6.6	4.0
	91	32.5	4.9	3.7	5.1	3.9	5.4	3.8	5.7	4.1	5.9	4.1	6.2	4.0	6.4	3.9
	95	35.0	4.8	3.7	5.1	3.9	5.4	3.8	5.6	4.1	5.8	4.0	6.1	4.0	6.3	3.9
	100	37.5	4.8	3.7	5.0	3.8	5.3	3.8	5.5	4.0	5.7	4.0	5.9	3.9	6.2	3.8
	104	40.0	4.8	3.7	5.0	3.8	5.2	3.7	5.4	4.0	5.6	4.0	5.8	3.9	6.1	3.8
	110	43.0	4.7	3.6	4.9	3.8	5.1	3.7	5.3	3.9	5.4	3.9	5.7	3.8	5.9	3.7
63 (7.1)	68	20.0	6.3	4.6	6.7	4.9	7.2	4.9	7.6	5.2	7.9	5.2	8.4	5.1	8.8	5.1
	73	22.5	6.3	4.6	6.7	4.9	7.2	4.9	7.6	5.2	7.9	5.2	8.4	5.1	8.8	5.1
	77	25.0	6.3	4.6	6.7	4.9	7.2	4.9	7.6	5.2	7.8	5.2	8.3	5.1	8.7	5.0
	82	27.5	6.2	4.6	6.7	4.9	7.1	4.8	7.5	5.2	7.7	5.1	8.1	5.0	8.5	4.9
	86	30.0	6.2	4.6	6.6	4.8	7.0	4.8	7.4	5.1	7.6	5.1	8.0	5.0	8.4	4.9
	91	32.5	6.2	4.6	6.5	4.8	6.9	4.7	7.2	5.0	7.4	5.0	7.8	4.9	8.2	4.8
	95	35.0	6.1	4.6	6.4	4.8	6.8	4.7	7.1	5.0	7.3	5.0	7.7	4.9	8.0	4.8
	100	37.5	6.1	4.5	6.4	4.7	6.7	4.6	7.0	4.9	7.2	4.9	7.5	4.8	7.8	4.7
	104	40.0	6.1	4.5	6.3	4.7	6.6	4.6	6.9	4.9	7.1	4.9	7.4	4.8	7.7	4.6
	110	43.0	6.0	4.5	6.2	4.6	6.5	4.5	6.7	4.8	6.9	4.8	7.2	4.7	7.5	4.6

kcal/h = kW x 860, Btu/h = kW x 3,412

I6. Cooling capacity with PUHY-HP200-500Y(S)HM

PFFY-P-VLRMM-E

CA : Capacity(kW) SHC : Sensible Heat Capacity(kW)

Model size (Rated kW)	Outdoor air temp.		Indoor air temp.													
			71 ˚FDB / 59˚FWB		73˚FDB / 61˚FWB		77˚FDB / 64˚FWB		81˚FDB / 66˚FWB		82˚FDB / 68˚FWB		86˚FDB / 72˚FWB		90˚FDB / 75˚FWB	
			21.5˚CDB / 15˚CWB		23˚CDB / 16˚CWB		25˚CDB / 18˚CWB		27˚CDB / 19˚CWB		28˚CDB / 20˚CWB		30˚CDB / 22˚CWB		32˚CDB / 24˚CWB	
	˚FDB	˚CDB	CA	SHC	CA	SHC	CA	SHC	CA	SHC	CA	SHC	CA	SHC	CA	SHC
20 (2.2)	68	20.0	1.9	1.6	2.1	1.7	2.2	1.7	2.4	1.8	2.4	1.8	2.6	1.8	2.7	1.8
	73	22.5	1.9	1.6	2.1	1.7	2.2	1.7	2.4	1.8	2.4	1.8	2.6	1.8	2.7	1.8
	77	25.0	1.9	1.6	2.1	1.7	2.2	1.7	2.4	1.8	2.4	1.8	2.6	1.8	2.7	1.7
	82	27.5	1.9	1.6	2.1	1.7	2.2	1.7	2.3	1.8	2.4	1.8	2.5	1.8	2.6	1.7
	86	30.0	1.9	1.6	2.0	1.7	2.2	1.6	2.3	1.8	2.4	1.8	2.5	1.7	2.6	1.7
	91	32.5	1.9	1.6	2.0	1.7	2.1	1.6	2.2	1.8	2.3	1.8	2.4	1.7	2.5	1.7
	95	35.0	1.9	1.6	2.0	1.6	2.1	1.6	2.2	1.7	2.3	1.7	2.4	1.7	2.5	1.7
	100	37.5	1.9	1.6	2.0	1.6	2.1	1.6	2.2	1.7	2.2	1.7	2.3	1.7	2.4	1.6
	104	40.0	1.9	1.6	1.9	1.6	2.0	1.6	2.1	1.7	2.2	1.7	2.3	1.7	2.4	1.6
	110	43.0	1.9	1.6	1.9	1.6	2.0	1.6	2.1	1.7	2.1	1.7	2.2	1.6	2.3	1.6
25 (2.8)	68	20.0	2.5	1.8	2.7	2.0	2.8	1.9	3.0	2.1	3.1	2.1	3.3	2.1	3.5	2.0
	73	22.5	2.5	1.8	2.7	2.0	2.8	1.9	3.0	2.1	3.1	2.1	3.3	2.1	3.5	2.0
	77	25.0	2.5	1.8	2.7	2.0	2.8	1.9	3.0	2.1	3.1	2.1	3.3	2.0	3.4	2.0
	82	27.5	2.5	1.8	2.6	1.9	2.8	1.9	2.9	2.1	3.0	2.1	3.2	2.0	3.4	2.0
	86	30.0	2.4	1.8	2.6	1.9	2.8	1.9	2.9	2.0	3.0	2.0	3.1	2.0	3.3	2.0
	91	32.5	2.4	1.8	2.6	1.9	2.7	1.9	2.8	2.0	2.9	2.0	3.1	2.0	3.2	1.9
	95	35.0	2.4	1.8	2.5	1.9	2.7	1.9	2.8	2.0	2.9	2.0	3.0	1.9	3.2	1.9
	100	37.5	2.4	1.8	2.5	1.9	2.6	1.9	2.8	2.0	2.8	2.0	3.0	1.9	3.1	1.9
	104	40.0	2.4	1.8	2.5	1.9	2.6	1.8	2.7	2.0	2.8	1.9	2.9	1.9	3.0	1.9
	110	43.0	2.4	1.8	2.4	1.8	2.6	1.8	2.7	1.9	2.7	1.9	2.8	1.9	2.9	1.8
32 (3.6)	68	20.0	3.2	2.4	3.4	2.5	3.6	2.5	3.9	2.7	4.0	2.7	4.2	2.6	4.5	2.6
	73	22.5	3.2	2.4	3.4	2.5	3.6	2.5	3.9	2.7	4.0	2.7	4.2	2.6	4.5	2.6
	77	25.0	3.2	2.4	3.4	2.5	3.6	2.5	3.8	2.7	4.0	2.6	4.2	2.6	4.4	2.6
	82	27.5	3.2	2.4	3.4	2.5	3.6	2.5	3.8	2.6	3.9	2.6	4.1	2.6	4.3	2.5
	86	30.0	3.1	2.3	3.3	2.5	3.5	2.4	3.7	2.6	3.8	2.6	4.0	2.5	4.2	2.5
	91	32.5	3.1	2.3	3.3	2.4	3.5	2.4	3.7	2.6	3.8	2.6	4.0	2.5	4.1	2.5
	95	35.0	3.1	2.3	3.3	2.4	3.4	2.4	3.6	2.6	3.7	2.5	3.9	2.5	4.1	2.4
	100	37.5	3.1	2.3	3.2	2.4	3.4	2.4	3.5	2.5	3.6	2.5	3.8	2.5	4.0	2.4
	104	40.0	3.1	2.3	3.2	2.4	3.3	2.3	3.5	2.5	3.6	2.5	3.7	2.4	3.9	2.4
	110	43.0	3.0	2.3	3.1	2.4	3.3	2.3	3.4	2.5	3.5	2.4	3.6	2.4	3.8	2.3
40 (4.5)	68	20.0	4.0	3.0	4.3	3.1	4.5	3.1	4.8	3.3	5.0	3.3	5.3	3.3	5.6	3.2
	73	22.5	4.0	3.0	4.3	3.1	4.5	3.1	4.8	3.3	5.0	3.3	5.3	3.3	5.6	3.2
	77	25.0	4.0	3.0	4.3	3.1	4.5	3.1	4.8	3.3	5.0	3.3	5.3	3.3	5.5	3.2
	82	27.5	4.0	3.0	4.2	3.1	4.5	3.1	4.7	3.3	4.9	3.3	5.1	3.2	5.4	3.2
	86	30.0	3.9	2.9	4.2	3.1	4.4	3.1	4.7	3.3	4.8	3.3	5.1	3.2	5.3	3.1
	91	32.5	3.9	2.9	4.1	3.1	4.4	3.0	4.6	3.2	4.7	3.2	5.0	3.2	5.2	3.1
	95	35.0	3.9	2.9	4.1	3.0	4.3	3.0	4.5	3.2	4.6	3.2	4.9	3.1	5.1	3.0
	100	37.5	3.9	2.9	4.0	3.0	4.2	3.0	4.4	3.2	4.5	3.1	4.8	3.1	5.0	3.0
	104	40.0	3.8	2.9	4.0	3.0	4.2	2.9	4.4	3.1	4.5	3.1	4.7	3.0	4.9	3.0
	110	43.0	3.8	2.9	3.9	3.0	4.1	2.9	4.3	3.1	4.4	3.1	4.5	3.0	4.7	2.9
50 (5.6)	68	20.0	4.9	3.7	5.3	4.0	5.6	3.9	6.0	4.2	6.2	4.2	6.6	4.2	7.0	4.1
	73	22.5	4.9	3.7	5.3	4.0	5.6	3.9	6.0	4.2	6.2	4.2	6.6	4.2	7.0	4.1
	77	25.0	4.9	3.7	5.3	4.0	5.6	3.9	6.0	4.2	6.2	4.2	6.5	4.1	6.9	4.1
	82	27.5	4.9	3.7	5.3	3.9	5.6	3.9	5.9	4.2	6.1	4.2	6.4	4.1	6.7	4.0
	86	30.0	4.9	3.7	5.2	3.9	5.5	3.9	5.8	4.1	6.0	4.1	6.3	4.1	6.6	4.0
	91	32.5	4.9	3.7	5.1	3.9	5.4	3.8	5.7	4.1	5.9	4.1	6.2	4.0	6.4	3.9
	95	35.0	4.8	3.7	5.1	3.9	5.4	3.8	5.6	4.1	5.8	4.0	6.1	4.0	6.3	3.9
	100	37.5	4.8	3.7	5.0	3.8	5.3	3.8	5.5	4.0	5.7	4.0	5.9	3.9	6.2	3.8
	104	40.0	4.8	3.7	5.0	3.8	5.2	3.7	5.4	4.0	5.6	4.0	5.8	3.9	6.1	3.8
	110	43.0	4.7	3.6	4.9	3.8	5.1	3.7	5.3	3.9	5.4	3.9	5.7	3.8	5.9	3.7
63 (7.1)	68	20.0	6.3	4.6	6.7	4.9	7.2	4.9	7.6	5.2	7.9	5.2	8.4	5.1	8.8	5.1
	73	22.5	6.3	4.6	6.7	4.9	7.2	4.9	7.6	5.2	7.9	5.2	8.4	5.1	8.8	5.1
	77	25.0	6.3	4.6	6.7	4.9	7.2	4.9	7.6	5.2	7.8	5.2	8.3	5.1	8.7	5.0
	82	27.5	6.2	4.6	6.7	4.9	7.1	4.8	7.5	5.2	7.7	5.1	8.1	5.0	8.5	4.9
	86	30.0	6.2	4.6	6.6	4.8	7.0	4.8	7.4	5.1	7.6	5.1	8.0	5.0	8.4	4.9
	91	32.5	6.2	4.6	6.5	4.8	6.9	4.7	7.2	5.0	7.4	5.0	7.8	4.9	8.2	4.8
	95	35.0	6.1	4.6	6.4	4.8	6.8	4.7	7.1	5.0	7.3	5.0	7.7	4.9	8.0	4.8
	100	37.5	6.1	4.5	6.4	4.7	6.7	4.6	7.0	4.9	7.2	4.9	7.5	4.8	7.8	4.7
	104	40.0	6.1	4.5	6.3	4.7	6.6	4.6	6.9	4.9	7.1	4.9	7.4	4.8	7.7	4.6
	110	43.0	6.0	4.5	6.2	4.6	6.5	4.5	6.7	4.8	6.9	4.8	7.2	4.7	7.5	4.6

kcal/h = kW x 860, Btu/h = kW x 3,412

CT

I7. Cooling capacity with PQHY-P200-900Y(S)HM PQRY-P200-600Y(S)HM

PFFY-P-VKM-E

CA : Capacity(kW) SHC : Sensible Heat Capacity(kW)

Model size (Rated kW)	Water temp.		Indoor air temp.													
			71 ˚FDB / 59˚FWB		73˚FDB / 61˚FWB		77˚FDB / 64˚FWB		81˚FDB / 66˚FWB		82˚FDB / 68˚FWB		86˚FDB / 72˚FWB		90˚FDB / 75˚FWB	
			21.5˚CDB / 15˚CWB		23˚CDB / 16˚CWB		25˚CDB / 18˚CWB		27˚CDB / 19˚CWB		28˚CDB / 20˚CWB		30˚CDB / 22˚CWB		32˚CDB / 24˚CWB	
	˚F	˚C	CA	SHC	CA	SHC	CA	SHC	CA	SHC	CA	SHC	CA	SHC	CA	SHC
20 (2.2)	50	10.0	2.0	1.6	2.0	1.7	2.1	1.7	2.2	1.8	2.2	1.7	2.2	1.7	2.2	1.6
	68	20.0	2.0	1.6	2.0	1.7	2.1	1.7	2.2	1.8	2.2	1.7	2.2	1.7	2.2	1.6
	86	30.0	2.0	1.6	2.0	1.7	2.1	1.7	2.2	1.8	2.2	1.7	2.2	1.7	2.2	1.6
	104	40.0	1.8	1.5	1.8	1.6	1.9	1.6	2.0	1.7	2.0	1.6	2.0	1.6	2.0	1.5
	113	45.0	1.7	1.5	1.7	1.5	1.8	1.5	1.8	1.6	1.8	1.6	1.8	1.5	1.8	1.5
25 (2.8)	50	10.0	2.5	1.9	2.6	2.0	2.7	1.9	2.8	2.1	2.8	2.0	2.8	1.9	2.8	1.8
	68	20.0	2.5	1.9	2.6	2.0	2.7	1.9	2.8	2.1	2.8	2.0	2.8	1.9	2.8	1.8
	86	30.0	2.5	1.9	2.6	2.0	2.7	1.9	2.8	2.1	2.8	2.0	2.8	1.9	2.8	1.8
	104	40.0	2.2	1.8	2.3	1.8	2.4	1.8	2.5	1.9	2.5	1.9	2.5	1.8	2.5	1.7
	113	45.0	2.1	1.7	2.2	1.8	2.3	1.8	2.3	1.9	2.3	1.8	2.3	1.8	2.3	1.7
32 (3.6)	50	10.0	3.2	2.3	3.3	2.4	3.5	2.4	3.6	2.5	3.6	2.4	3.6	2.3	3.6	2.2
	68	20.0	3.2	2.3	3.3	2.4	3.5	2.4	3.6	2.5	3.6	2.4	3.6	2.3	3.6	2.2
	86	30.0	3.2	2.3	3.3	2.4	3.5	2.4	3.6	2.5	3.6	2.4	3.6	2.3	3.6	2.2
	104	40.0	2.9	2.1	3.0	2.2	3.1	2.2	3.2	2.3	3.2	2.2	3.2	2.1	3.2	2.0
	113	45.0	2.7	2.1	2.8	2.1	2.9	2.1	3.0	2.2	3.0	2.2	3.0	2.1	3.0	2.0
40 (4.5)	50	10.0	4.1	2.9	4.2	2.9	4.4	2.9	4.5	3.0	4.5	3.0	4.5	2.8	4.5	2.7
	68	20.0	4.1	2.9	4.2	2.9	4.4	2.9	4.5	3.0	4.5	3.0	4.5	2.8	4.5	2.7
	86	30.0	4.1	2.9	4.2	2.9	4.4	2.9	4.5	3.0	4.5	3.0	4.5	2.8	4.5	2.7
	104	40.0	3.6	2.6	3.7	2.7	3.9	2.7	4.0	2.8	4.0	2.8	4.0	2.6	4.0	2.5
	113	45.0	3.4	2.5	3.5	2.6	3.7	2.6	3.8	2.7	3.8	2.6	3.8	2.5	3.8	2.4

kcal/h = kW x 860, Btu/h = kW x 3,412

I7. Cooling capacity with PQHY-P200-900Y(S)HM PQRY-P200-600Y(S)HM

PFFY-P-VLEM-E,VLRM-E

CA : Capacity(kW) SHC : Sensible Heat Capacity(kW)

Model size (Rated kW)	Water temp.		Indoor air temp.													
			71 ˚FDB / 59˚FWB		73˚FDB / 61˚FWB		77˚FDB / 64˚FWB		81˚FDB / 66˚FWB		82˚FDB / 68˚FWB		86˚FDB / 72˚FWB		90˚FDB / 75˚FWB	
			21.5˚CDB / 15˚CWB		23˚CDB / 16˚CWB		25˚CDB / 18˚CWB		27˚CDB / 19˚CWB		28˚CDB / 20˚CWB		30˚CDB / 22˚CWB		32˚CDB / 24˚CWB	
	˚F	˚C	CA	SHC	CA	SHC	CA	SHC	CA	SHC	CA	SHC	CA	SHC	CA	SHC
20 (2.2)	50	10.0	2.0	1.6	2.0	1.7	2.1	1.6	2.2	1.7	2.2	1.7	2.2	1.6	2.2	1.6
	68	20.0	2.0	1.6	2.0	1.7	2.1	1.6	2.2	1.7	2.2	1.7	2.2	1.6	2.2	1.6
	86	30.0	2.0	1.6	2.0	1.7	2.1	1.6	2.2	1.7	2.2	1.7	2.2	1.6	2.2	1.6
	104	40.0	1.8	1.5	1.8	1.6	1.9	1.5	2.0	1.6	2.0	1.6	2.0	1.6	2.0	1.5
	113	45.0	1.7	1.5	1.7	1.5	1.8	1.5	1.8	1.6	1.8	1.6	1.8	1.5	1.8	1.5
25 (2.8)	50	10.0	2.5	1.9	2.6	1.9	2.7	1.9	2.8	2.0	2.8	2.0	2.8	1.9	2.8	1.8
	68	20.0	2.5	1.9	2.6	1.9	2.7	1.9	2.8	2.0	2.8	2.0	2.8	1.9	2.8	1.8
	86	30.0	2.5	1.9	2.6	1.9	2.7	1.9	2.8	2.0	2.8	2.0	2.8	1.9	2.8	1.8
	104	40.0	2.2	1.7	2.3	1.8	2.4	1.8	2.5	1.9	2.5	1.8	2.5	1.7	2.5	1.7
	113	45.0	2.1	1.7	2.2	1.7	2.3	1.7	2.3	1.8	2.3	1.8	2.3	1.7	2.3	1.6
32 (3.6)	50	10.0	3.2	2.4	3.3	2.5	3.5	2.4	3.6	2.5	3.6	2.5	3.6	2.4	3.6	2.3
	68	20.0	3.2	2.4	3.3	2.5	3.5	2.4	3.6	2.5	3.6	2.5	3.6	2.4	3.6	2.3
	86	30.0	3.2	2.4	3.3	2.5	3.5	2.4	3.6	2.5	3.6	2.5	3.6	2.4	3.6	2.3
	104	40.0	2.9	2.2	3.0	2.3	3.1	2.2	3.2	2.4	3.2	2.3	3.2	2.2	3.2	2.1
	113	45.0	2.7	2.1	2.8	2.2	2.9	2.2	3.0	2.3	3.0	2.2	3.0	2.1	3.0	2.1
40 (4.5)	50	10.0	4.1	3.0	4.2	3.1	4.4	3.0	4.5	3.2	4.5	3.1	4.5	3.0	4.5	2.8
	68	20.0	4.1	3.0	4.2	3.1	4.4	3.0	4.5	3.2	4.5	3.1	4.5	3.0	4.5	2.8
	86	30.0	4.1	3.0	4.2	3.1	4.4	3.0	4.5	3.2	4.5	3.1	4.5	3.0	4.5	2.8
	104	40.0	3.6	2.8	3.7	2.9	3.9	2.8	4.0	3.0	4.0	2.9	4.0	2.8	4.0	2.7
	113	45.0	3.4	2.7	3.5	2.8	3.7	2.7	3.8	2.9	3.8	2.8	3.8	2.7	3.8	2.6
50 (5.6)	50	10.0	5.0	3.8	5.2	3.9	5.5	3.8	5.6	4.1	5.6	4.0	5.6	3.8	5.6	3.6
	68	20.0	5.0	3.8	5.2	3.9	5.5	3.8	5.6	4.1	5.6	4.0	5.6	3.8	5.6	3.6
	86	30.0	5.0	3.8	5.2	3.9	5.5	3.8	5.6	4.1	5.6	4.0	5.6	3.8	5.6	3.6
	104	40.0	4.5	3.5	4.6	3.6	4.9	3.6	5.0	3.8	5.0	3.7	5.0	3.6	5.0	3.4
	113	45.0	4.2	3.4	4.3	3.5	4.6	3.4	4.7	3.7	4.7	3.6	4.7	3.4	4.7	3.3
63 (7.1)	50	10.0	6.4	4.7	6.6	4.8	6.9	4.7	7.1	5.0	7.1	4.9	7.1	4.6	7.1	4.4
	68	20.0	6.4	4.7	6.6	4.8	6.9	4.7	7.1	5.0	7.1	4.9	7.1	4.6	7.1	4.4
	86	30.0	6.4	4.7	6.6	4.8	6.9	4.7	7.1	5.0	7.1	4.9	7.1	4.6	7.1	4.4
	104	40.0	5.7	4.3	5.8	4.5	6.2	4.4	6.3	4.7	6.3	4.6	6.3	4.3	6.3	4.2
	113	45.0	5.3	4.2	5.5	4.3	5.8	4.2	5.9	4.5	5.9	4.4	5.9	4.2	5.9	4.0

kcal/h = kW x 860, Btu/h = kW x 3,412

CT

I7. Cooling capacity with PQHY-P200-900Y(S)HM PQRY-P200-600Y(S)HM

PFFY-P-VLRMM-E

CA : Capacity(kW) SHC : Sensible Heat Capacity(kW)

Model size (Rated kW)	Water temp.		Indoor air temp.													
			71 ˚FDB / 59˚FWB		73˚FDB / 61˚FWB		77˚FDB / 64˚FWB		81˚FDB / 66˚FWB		82˚FDB / 68˚FWB		86˚FDB / 72˚FWB		90˚FDB / 75˚FWB	
			21.5˚CDB / 15˚CWB		23˚CDB / 16˚CWB		25˚CDB / 18˚CWB		27˚CDB / 19˚CWB		28˚CDB / 20˚CWB		30˚CDB / 22˚CWB		32˚CDB / 24˚CWB	
	˚F	˚C	CA	SHC	CA	SHC	CA	SHC	CA	SHC	CA	SHC	CA	SHC	CA	SHC
20 (2.2)	50	10.0	2.0	1.6	2.0	1.7	2.1	1.6	2.2	1.7	2.2	1.7	2.2	1.6	2.2	1.6
	68	20.0	2.0	1.6	2.0	1.7	2.1	1.6	2.2	1.7	2.2	1.7	2.2	1.6	2.2	1.6
	86	30.0	2.0	1.6	2.0	1.7	2.1	1.6	2.2	1.7	2.2	1.7	2.2	1.6	2.2	1.6
	104	40.0	1.8	1.5	1.8	1.6	1.9	1.5	2.0	1.6	2.0	1.6	2.0	1.6	2.0	1.5
	113	45.0	1.7	1.5	1.7	1.5	1.8	1.5	1.8	1.6	1.8	1.6	1.8	1.5	1.8	1.5
25 (2.8)	50	10.0	2.5	1.9	2.6	1.9	2.7	1.9	2.8	2.0	2.8	2.0	2.8	1.9	2.8	1.8
	68	20.0	2.5	1.9	2.6	1.9	2.7	1.9	2.8	2.0	2.8	2.0	2.8	1.9	2.8	1.8
	86	30.0	2.5	1.9	2.6	1.9	2.7	1.9	2.8	2.0	2.8	2.0	2.8	1.9	2.8	1.8
	104	40.0	2.2	1.7	2.3	1.8	2.4	1.8	2.5	1.9	2.5	1.8	2.5	1.7	2.5	1.7
	113	45.0	2.1	1.7	2.2	1.7	2.3	1.7	2.3	1.8	2.3	1.8	2.3	1.7	2.3	1.6
32 (3.6)	50	10.0	3.2	2.4	3.3	2.5	3.5	2.4	3.6	2.5	3.6	2.5	3.6	2.4	3.6	2.3
	68	20.0	3.2	2.4	3.3	2.5	3.5	2.4	3.6	2.5	3.6	2.5	3.6	2.4	3.6	2.3
	86	30.0	3.2	2.4	3.3	2.5	3.5	2.4	3.6	2.5	3.6	2.5	3.6	2.4	3.6	2.3
	104	40.0	2.9	2.2	3.0	2.3	3.1	2.2	3.2	2.4	3.2	2.3	3.2	2.2	3.2	2.1
	113	45.0	2.7	2.1	2.8	2.2	2.9	2.2	3.0	2.3	3.0	2.2	3.0	2.1	3.0	2.1
40 (4.5)	50	10.0	4.1	3.0	4.2	3.1	4.4	3.0	4.5	3.2	4.5	3.1	4.5	3.0	4.5	2.8
	68	20.0	4.1	3.0	4.2	3.1	4.4	3.0	4.5	3.2	4.5	3.1	4.5	3.0	4.5	2.8
	86	30.0	4.1	3.0	4.2	3.1	4.4	3.0	4.5	3.2	4.5	3.1	4.5	3.0	4.5	2.8
	104	40.0	3.6	2.8	3.7	2.9	3.9	2.8	4.0	3.0	4.0	2.9	4.0	2.8	4.0	2.7
	113	45.0	3.4	2.7	3.5	2.8	3.7	2.7	3.8	2.9	3.8	2.8	3.8	2.7	3.8	2.6
50 (5.6)	50	10.0	5.0	3.8	5.2	3.9	5.5	3.8	5.6	4.1	5.6	4.0	5.6	3.8	5.6	3.6
	68	20.0	5.0	3.8	5.2	3.9	5.5	3.8	5.6	4.1	5.6	4.0	5.6	3.8	5.6	3.6
	86	30.0	5.0	3.8	5.2	3.9	5.5	3.8	5.6	4.1	5.6	4.0	5.6	3.8	5.6	3.6
	104	40.0	4.5	3.5	4.6	3.6	4.9	3.6	5.0	3.8	5.0	3.7	5.0	3.6	5.0	3.4
	113	45.0	4.2	3.4	4.3	3.5	4.6	3.4	4.7	3.7	4.7	3.6	4.7	3.4	4.7	3.3
63 (7.1)	50	10.0	6.4	4.7	6.6	4.8	6.9	4.7	7.1	5.0	7.1	4.9	7.1	4.6	7.1	4.4
	68	20.0	6.4	4.7	6.6	4.8	6.9	4.7	7.1	5.0	7.1	4.9	7.1	4.6	7.1	4.4
	86	30.0	6.4	4.7	6.6	4.8	6.9	4.7	7.1	5.0	7.1	4.9	7.1	4.6	7.1	4.4
	104	40.0	5.7	4.3	5.8	4.5	6.2	4.4	6.3	4.7	6.3	4.6	6.3	4.3	6.3	4.2
	113	45.0	5.3	4.2	5.5	4.3	5.8	4.2	5.9	4.5	5.9	4.4	5.9	4.2	5.9	4.0

kcal/h = kW x 860, Btu/h = kW x 3,412

I8. Cooling capacity with PUMY-P100,125,140YHMB,VHMB

PFFY-P-VKM-E

CA : Capacity(kW) SHC : Sensible Heat Capacity(kW)

Model size (Rated kW)	Outdoor air temp.		Indoor air temp.													
			71 ˚FDB / 59˚FWB		73˚FDB / 61˚FWB		77˚FDB / 64˚FWB		81˚FDB / 66˚FWB		82˚FDB / 68˚FWB		86˚FDB / 72˚FWB		90˚FDB / 75˚FWB	
			21.5˚CDB / 15˚CWB		23˚CDB / 16˚CWB		25˚CDB / 18˚CWB		27˚CDB / 19˚CWB		28˚CDB / 20˚CWB		30˚CDB / 22˚CWB		32˚CDB / 24˚CWB	
	˚FDB	˚CDB	CA	SHC	CA	SHC	CA	SHC	CA	SHC	CA	SHC	CA	SHC	CA	SHC
20 (2.2)	68	20.0	2.1	1.7	2.2	1.7	2.3	1.7	2.4	1.8	2.4	1.8	2.6	1.8	2.7	1.8
	73	22.5	2.0	1.7	2.1	1.7	2.3	1.7	2.3	1.8	2.4	1.8	2.6	1.8	2.7	1.7
	77	25.0	2.0	1.6	2.1	1.7	2.2	1.7	2.3	1.8	2.4	1.8	2.5	1.8	2.6	1.7
	82	27.5	2.0	1.6	2.1	1.7	2.2	1.7	2.3	1.8	2.4	1.8	2.5	1.8	2.6	1.7
	86	30.0	2.0	1.6	2.1	1.7	2.2	1.7	2.3	1.8	2.3	1.8	2.5	1.8	2.6	1.7
	91	32.5	1.9	1.6	2.0	1.7	2.2	1.7	2.2	1.8	2.3	1.8	2.4	1.7	2.6	1.7
	95	35.0	1.9	1.6	2.0	1.7	2.1	1.7	2.2	1.8	2.3	1.8	2.4	1.7	2.5	1.7
	100	37.5	1.9	1.6	2.0	1.6	2.1	1.6	2.2	1.8	2.2	1.7	2.4	1.7	2.5	1.7
	104	40.0	1.8	1.6	1.9	1.6	2.1	1.6	2.1	1.7	2.2	1.7	2.4	1.7	2.5	1.7
	110	43.0	1.8	1.5	1.9	1.6	2.1	1.6	2.1	1.7	2.2	1.7	2.3	1.7	2.4	1.7
25 (2.8)	68	20.0	2.6	2.0	2.8	2.1	2.9	2.0	3.0	2.2	3.1	2.1	3.3	2.1	3.4	2.1
	73	22.5	2.6	2.0	2.7	2.0	2.9	2.0	3.0	2.1	3.1	2.1	3.2	2.1	3.4	2.1
	77	25.0	2.6	1.9	2.7	2.0	2.9	2.0	2.9	2.1	3.0	2.1	3.2	2.1	3.4	2.0
	82	27.5	2.5	1.9	2.7	2.0	2.8	2.0	2.9	2.1	3.0	2.1	3.2	2.1	3.3	2.0
	86	30.0	2.5	1.9	2.6	2.0	2.8	2.0	2.9	2.1	3.0	2.1	3.2	2.1	3.3	2.0
	91	32.5	2.5	1.9	2.6	2.0	2.8	2.0	2.8	2.1	2.9	2.1	3.1	2.0	3.3	2.0
	95	35.0	2.4	1.9	2.6	2.0	2.7	1.9	2.8	2.1	2.9	2.0	3.1	2.0	3.2	2.0
	100	37.5	2.4	1.9	2.5	1.9	2.7	1.9	2.8	2.0	2.8	2.0	3.0	2.0	3.2	2.0
	104	40.0	2.3	1.8	2.5	1.9	2.7	1.9	2.7	2.0	2.8	2.0	3.0	2.0	3.2	2.0
	110	43.0	2.3	1.8	2.4	1.9	2.6	1.9	2.7	2.0	2.7	2.0	3.0	2.0	3.1	1.9
32 (3.6)	68	20.0	3.4	2.4	3.6	2.5	3.7	2.5	3.9	2.6	4.0	2.6	4.2	2.5	4.4	2.5
	73	22.5	3.3	2.4	3.5	2.5	3.7	2.4	3.8	2.6	4.0	2.6	4.2	2.5	4.4	2.5
	77	25.0	3.3	2.4	3.5	2.5	3.7	2.4	3.8	2.6	3.9	2.5	4.1	2.5	4.3	2.5
	82	27.5	3.3	2.3	3.4	2.4	3.6	2.4	3.7	2.5	3.9	2.5	4.1	2.5	4.3	2.4
	86	30.0	3.2	2.3	3.4	2.4	3.6	2.4	3.7	2.5	3.8	2.5	4.1	2.5	4.2	2.4
	91	32.5	3.2	2.3	3.3	2.4	3.6	2.4	3.7	2.5	3.8	2.5	4.0	2.5	4.2	2.4
	95	35.0	3.1	2.3	3.3	2.4	3.5	2.4	3.6	2.5	3.7	2.5	4.0	2.4	4.2	2.4
	100	37.5	3.1	2.2	3.2	2.3	3.5	2.3	3.6	2.5	3.7	2.4	3.9	2.4	4.1	2.4
	104	40.0	3.0	2.2	3.2	2.3	3.4	2.3	3.5	2.4	3.6	2.4	3.9	2.4	4.1	2.3
	110	43.0	2.9	2.2	3.1	2.3	3.4	2.3	3.4	2.4	3.5	2.4	3.8	2.4	4.0	2.3
40 (4.5)	68	20.0	4.2	3.0	4.4	3.1	4.7	3.0	4.8	3.2	5.0	3.2	5.3	3.1	5.5	3.1
	73	22.5	4.2	2.9	4.4	3.1	4.6	3.0	4.8	3.2	4.9	3.2	5.2	3.1	5.5	3.0
	77	25.0	4.1	2.9	4.3	3.0	4.6	3.0	4.7	3.2	4.9	3.1	5.2	3.1	5.4	3.0
	82	27.5	4.1	2.9	4.3	3.0	4.5	3.0	4.7	3.1	4.8	3.1	5.1	3.1	5.4	3.0
	86	30.0	4.0	2.9	4.2	3.0	4.5	3.0	4.6	3.1	4.8	3.1	5.1	3.0	5.3	3.0
	91	32.5	4.0	2.8	4.2	3.0	4.4	2.9	4.6	3.1	4.7	3.1	5.0	3.0	5.3	3.0
	95	35.0	3.9	2.8	4.1	2.9	4.4	2.9	4.5	3.0	4.6	3.0	4.9	3.0	5.2	2.9
	100	37.5	3.8	2.8	4.0	2.9	4.3	2.9	4.5	3.0	4.6	3.0	4.9	3.0	5.1	2.9
	104	40.0	3.8	2.7	4.0	2.9	4.3	2.9	4.4	3.0	4.5	3.0	4.8	3.0	5.1	2.9
	110	43.0	3.7	2.7	3.9	2.8	4.2	2.8	4.3	3.0	4.4	2.9	4.8	2.9	5.0	2.9

kcal/h = kW x 860, Btu/h = kW x 3,412

CT

I8. Cooling capacity with PUMY-P100,125,140YHMB,VHMB

PFFY-P-VLEM-E,VLRM-E

CA : Capacity(kW) SHC : Sensible Heat Capacity(kW)

Model size (Rated kW)	Outdoor air temp.		Indoor air temp.													
			71 ˚FDB / 59˚FWB		73˚FDB / 61˚FWB		77˚FDB / 64˚FWB		81˚FDB / 66˚FWB		82˚FDB / 68˚FWB		86˚FDB / 72˚FWB		90˚FDB / 75˚FWB	
			21.5˚CDB / 15˚CWB		23˚CDB / 16˚CWB		25˚CDB / 18˚CWB		27˚CDB / 19˚CWB		28˚CDB / 20˚CWB		30˚CDB / 22˚CWB		32˚CDB / 24˚CWB	
	˚FDB	˚CDB	CA	SHC	CA	SHC	CA	SHC	CA	SHC	CA	SHC	CA	SHC	CA	SHC
20 (2.2)	68	20.0	2.1	1.7	2.2	1.7	2.3	1.7	2.4	1.8	2.4	1.8	2.6	1.8	2.7	1.7
	73	22.5	2.0	1.6	2.1	1.7	2.3	1.7	2.3	1.8	2.4	1.8	2.6	1.8	2.7	1.7
	77	25.0	2.0	1.6	2.1	1.7	2.2	1.7	2.3	1.8	2.4	1.8	2.5	1.8	2.6	1.7
	82	27.5	2.0	1.6	2.1	1.7	2.2	1.7	2.3	1.8	2.4	1.8	2.5	1.8	2.6	1.7
	86	30.0	2.0	1.6	2.1	1.7	2.2	1.7	2.3	1.8	2.3	1.8	2.5	1.7	2.6	1.7
	91	32.5	1.9	1.6	2.0	1.7	2.2	1.7	2.2	1.8	2.3	1.7	2.4	1.7	2.6	1.7
	95	35.0	1.9	1.6	2.0	1.7	2.1	1.6	2.2	1.7	2.3	1.7	2.4	1.7	2.5	1.7
	100	37.5	1.9	1.6	2.0	1.6	2.1	1.6	2.2	1.7	2.2	1.7	2.4	1.7	2.5	1.7
	104	40.0	1.8	1.5	1.9	1.6	2.1	1.6	2.1	1.7	2.2	1.7	2.4	1.7	2.5	1.7
	110	43.0	1.8	1.5	1.9	1.6	2.1	1.6	2.1	1.7	2.2	1.7	2.3	1.7	2.4	1.7
25 (2.8)	68	20.0	2.6	1.9	2.8	2.0	2.9	2.0	3.0	2.1	3.1	2.1	3.3	2.0	3.4	2.0
	73	22.5	2.6	1.9	2.7	2.0	2.9	2.0	3.0	2.1	3.1	2.1	3.2	2.0	3.4	2.0
	77	25.0	2.6	1.9	2.7	2.0	2.9	2.0	2.9	2.1	3.0	2.1	3.2	2.0	3.4	2.0
	82	27.5	2.5	1.9	2.7	2.0	2.8	1.9	2.9	2.0	3.0	2.0	3.2	2.0	3.3	2.0
	86	30.0	2.5	1.9	2.6	1.9	2.8	1.9	2.9	2.0	3.0	2.0	3.2	2.0	3.3	2.0
	91	32.5	2.5	1.8	2.6	1.9	2.8	1.9	2.8	2.0	2.9	2.0	3.1	2.0	3.3	1.9
	95	35.0	2.4	1.8	2.6	1.9	2.7	1.9	2.8	2.0	2.9	2.0	3.1	2.0	3.2	1.9
	100	37.5	2.4	1.8	2.5	1.9	2.7	1.9	2.8	2.0	2.8	2.0	3.0	2.0	3.2	1.9
	104	40.0	2.3	1.8	2.5	1.9	2.7	1.9	2.7	2.0	2.8	2.0	3.0	1.9	3.2	1.9
	110	43.0	2.3	1.8	2.4	1.8	2.6	1.8	2.7	1.9	2.7	1.9	3.0	1.9	3.1	1.9
32 (3.6)	68	20.0	3.4	2.5	3.6	2.6	3.7	2.5	3.9	2.7	4.0	2.7	4.2	2.6	4.4	2.6
	73	22.5	3.3	2.4	3.5	2.5	3.7	2.5	3.8	2.7	4.0	2.6	4.2	2.6	4.4	2.5
	77	25.0	3.3	2.4	3.5	2.5	3.7	2.5	3.8	2.6	3.9	2.6	4.1	2.6	4.3	2.5
	82	27.5	3.3	2.4	3.4	2.5	3.6	2.5	3.7	2.6	3.9	2.6	4.1	2.6	4.3	2.5
	86	30.0	3.2	2.4	3.4	2.5	3.6	2.5	3.7	2.6	3.8	2.6	4.1	2.5	4.2	2.5
	91	32.5	3.2	2.4	3.3	2.5	3.6	2.4	3.7	2.6	3.8	2.6	4.0	2.5	4.2	2.5
	95	35.0	3.1	2.3	3.3	2.4	3.5	2.4	3.6	2.5	3.7	2.5	4.0	2.5	4.2	2.5
	100	37.5	3.1	2.3	3.2	2.4	3.5	2.4	3.6	2.5	3.7	2.5	3.9	2.5	4.1	2.4
	104	40.0	3.0	2.3	3.2	2.4	3.4	2.4	3.5	2.5	3.6	2.5	3.9	2.5	4.1	2.4
	110	43.0	2.9	2.2	3.1	2.3	3.4	2.4	3.4	2.5	3.5	2.5	3.8	2.4	4.0	2.4
40 (4.5)	68	20.0	4.2	3.1	4.4	3.2	4.7	3.2	4.8	3.4	5.0	3.3	5.3	3.3	5.5	3.2
	73	22.5	4.2	3.1	4.4	3.2	4.6	3.2	4.8	3.3	4.9	3.3	5.2	3.3	5.5	3.2
	77	25.0	4.1	3.0	4.3	3.2	4.6	3.1	4.7	3.3	4.9	3.3	5.2	3.2	5.4	3.2
	82	27.5	4.1	3.0	4.3	3.1	4.5	3.1	4.7	3.3	4.8	3.3	5.1	3.2	5.4	3.1
	86	30.0	4.0	3.0	4.2	3.1	4.5	3.1	4.6	3.3	4.8	3.2	5.1	3.2	5.3	3.1
	91	32.5	4.0	3.0	4.2	3.1	4.4	3.1	4.6	3.2	4.7	3.2	5.0	3.2	5.3	3.1
	95	35.0	3.9	2.9	4.1	3.1	4.4	3.0	4.5	3.2	4.6	3.2	4.9	3.2	5.2	3.1
	100	37.5	3.8	2.9	4.0	3.0	4.3	3.0	4.5	3.2	4.6	3.2	4.9	3.1	5.1	3.1
	104	40.0	3.8	2.9	4.0	3.0	4.3	3.0	4.4	3.2	4.5	3.1	4.8	3.1	5.1	3.0
	110	43.0	3.7	2.8	3.9	2.9	4.2	3.0	4.3	3.1	4.4	3.1	4.8	3.1	5.0	3.0
50 (5.6)	68	20.0	5.3	3.9	5.5	4.1	5.8	4.0	6.0	4.2	6.2	4.2	6.6	4.2	6.9	4.1
	73	22.5	5.2	3.9	5.5	4.0	5.8	4.0	6.0	4.2	6.1	4.2	6.5	4.1	6.8	4.0
	77	25.0	5.2	3.8	5.4	4.0	5.7	4.0	5.9	4.2	6.1	4.2	6.4	4.1	6.7	4.0
	82	27.5	5.1	3.8	5.3	4.0	5.7	3.9	5.8	4.2	6.0	4.1	6.4	4.1	6.7	4.0
	86	30.0	5.0	3.8	5.3	3.9	5.6	3.9	5.8	4.1	5.9	4.1	6.3	4.1	6.6	4.0
	91	32.5	4.9	3.7	5.2	3.9	5.5	3.9	5.7	4.1	5.9	4.1	6.2	4.0	6.5	3.9
	95	35.0	4.9	3.7	5.1	3.9	5.5	3.8	5.6	4.1	5.8	4.0	6.2	4.0	6.5	3.9
	100	37.5	4.8	3.7	5.0	3.8	5.4	3.8	5.5	4.0	5.7	4.0	6.1	4.0	6.4	3.9
	104	40.0	4.7	3.6	4.9	3.8	5.3	3.8	5.5	4.0	5.6	4.0	6.0	3.9	6.3	3.9
	110	43.0	4.6	3.6	4.8	3.7	5.2	3.7	5.4	4.0	5.5	3.9	5.9	3.9	6.2	3.8
63 (7.1)	68	20.0	6.7	4.8	7.0	5.0	7.4	5.0	7.6	5.2	7.9	5.2	8.3	5.1	8.7	5.0
	73	22.5	6.6	4.8	6.9	5.0	7.3	4.9	7.6	5.2	7.8	5.2	8.2	5.1	8.6	5.0
	77	25.0	6.5	4.8	6.9	5.0	7.2	4.9	7.5	5.2	7.7	5.1	8.2	5.1	8.5	4.9
	82	27.5	6.5	4.7	6.8	4.9	7.2	4.9	7.4	5.1	7.6	5.1	8.1	5.0	8.5	4.9
	86	30.0	6.4	4.7	6.7	4.9	7.1	4.8	7.3	5.1	7.5	5.1	8.0	5.0	8.4	4.9
	91	32.5	6.3	4.6	6.6	4.8	7.0	4.8	7.2	5.0	7.4	5.0	7.9	5.0	8.3	4.8
	95	35.0	6.2	4.6	6.5	4.8	6.9	4.7	7.1	5.0	7.3	5.0	7.8	4.9	8.2	4.8
	100	37.5	6.1	4.5	6.4	4.7	6.8	4.7	7.0	5.0	7.2	4.9	7.7	4.9	8.1	4.8
	104	40.0	5.9	4.5	6.3	4.7	6.8	4.7	6.9	4.9	7.1	4.9	7.6	4.8	8.0	4.7
	110	43.0	5.8	4.4	6.1	4.6	6.6	4.6	6.8	4.9	6.9	4.8	7.5	4.8	7.9	4.7

kcal/h = kW x 860, Btu/h = kW x 3,412

I8. Cooling capacity with PUMY-P100,125,140YHMB,VHMB

PFFY-P-VLRMM-E

CA : Capacity(kW) SHC : Sensible Heat Capacity(kW)

Model size (Rated kW)	Outdoor air temp.		Indoor air temp.													
			71 ˚FDB / 59˚FWB		73˚FDB / 61˚FWB		77˚FDB / 64˚FWB		81˚FDB / 66˚FWB		82˚FDB / 68˚FWB		86˚FDB / 72˚FWB		90˚FDB / 75˚FWB	
			21.5˚CDB / 15˚CWB		23˚CDB / 16˚CWB		25˚CDB / 18˚CWB		27˚CDB / 19˚CWB		28˚CDB / 20˚CWB		30˚CDB / 22˚CWB		32˚CDB / 24˚CWB	
	˚FDB	˚CDB	CA	SHC	CA	SHC	CA	SHC	CA	SHC	CA	SHC	CA	SHC	CA	SHC
20 (2.2)	68	20.0	2.1	1.7	2.2	1.7	2.3	1.7	2.4	1.8	2.4	1.8	2.6	1.8	2.7	1.7
	73	22.5	2.0	1.6	2.1	1.7	2.3	1.7	2.3	1.8	2.4	1.8	2.6	1.8	2.7	1.7
	77	25.0	2.0	1.6	2.1	1.7	2.2	1.7	2.3	1.8	2.4	1.8	2.5	1.8	2.6	1.7
	82	27.5	2.0	1.6	2.1	1.7	2.2	1.7	2.3	1.8	2.4	1.8	2.5	1.8	2.6	1.7
	86	30.0	2.0	1.6	2.1	1.7	2.2	1.7	2.3	1.8	2.3	1.8	2.5	1.7	2.6	1.7
	91	32.5	1.9	1.6	2.0	1.7	2.2	1.7	2.2	1.8	2.3	1.7	2.4	1.7	2.6	1.7
	95	35.0	1.9	1.6	2.0	1.7	2.1	1.6	2.2	1.7	2.3	1.7	2.4	1.7	2.5	1.7
	100	37.5	1.9	1.6	2.0	1.6	2.1	1.6	2.2	1.7	2.2	1.7	2.4	1.7	2.5	1.7
	104	40.0	1.8	1.5	1.9	1.6	2.1	1.6	2.1	1.7	2.2	1.7	2.4	1.7	2.5	1.7
	110	43.0	1.8	1.5	1.9	1.6	2.1	1.6	2.1	1.7	2.2	1.7	2.3	1.7	2.4	1.7
25 (2.8)	68	20.0	2.6	1.9	2.8	2.0	2.9	2.0	3.0	2.1	3.1	2.1	3.3	2.0	3.4	2.0
	73	22.5	2.6	1.9	2.7	2.0	2.9	2.0	3.0	2.1	3.1	2.1	3.2	2.0	3.4	2.0
	77	25.0	2.6	1.9	2.7	2.0	2.9	2.0	2.9	2.1	3.0	2.1	3.2	2.0	3.4	2.0
	82	27.5	2.5	1.9	2.7	2.0	2.8	1.9	2.9	2.0	3.0	2.0	3.2	2.0	3.3	2.0
	86	30.0	2.5	1.9	2.6	1.9	2.8	1.9	2.9	2.0	3.0	2.0	3.2	2.0	3.3	2.0
	91	32.5	2.5	1.8	2.6	1.9	2.8	1.9	2.8	2.0	2.9	2.0	3.1	2.0	3.3	1.9
	95	35.0	2.4	1.8	2.6	1.9	2.7	1.9	2.8	2.0	2.9	2.0	3.1	2.0	3.2	1.9
	100	37.5	2.4	1.8	2.5	1.9	2.7	1.9	2.8	2.0	2.8	2.0	3.0	2.0	3.2	1.9
	104	40.0	2.3	1.8	2.5	1.9	2.7	1.9	2.7	2.0	2.8	2.0	3.0	1.9	3.2	1.9
	110	43.0	2.3	1.8	2.4	1.8	2.6	1.8	2.7	1.9	2.7	1.9	3.0	1.9	3.1	1.9
32 (3.6)	68	20.0	3.4	2.5	3.6	2.6	3.7	2.5	3.9	2.7	4.0	2.7	4.2	2.6	4.4	2.6
	73	22.5	3.3	2.4	3.5	2.5	3.7	2.5	3.8	2.7	4.0	2.6	4.2	2.6	4.4	2.5
	77	25.0	3.3	2.4	3.5	2.5	3.7	2.5	3.8	2.6	3.9	2.6	4.1	2.6	4.3	2.5
	82	27.5	3.3	2.4	3.4	2.5	3.6	2.5	3.7	2.6	3.9	2.6	4.1	2.6	4.3	2.5
	86	30.0	3.2	2.4	3.4	2.5	3.6	2.5	3.7	2.6	3.8	2.6	4.1	2.5	4.2	2.5
	91	32.5	3.2	2.4	3.3	2.5	3.6	2.4	3.7	2.6	3.8	2.6	4.0	2.5	4.2	2.5
	95	35.0	3.1	2.3	3.3	2.4	3.5	2.4	3.6	2.5	3.7	2.5	4.0	2.5	4.2	2.5
	100	37.5	3.1	2.3	3.2	2.4	3.5	2.4	3.6	2.5	3.7	2.5	3.9	2.5	4.1	2.4
	104	40.0	3.0	2.3	3.2	2.4	3.4	2.4	3.5	2.5	3.6	2.5	3.9	2.5	4.1	2.4
	110	43.0	2.9	2.2	3.1	2.3	3.4	2.4	3.4	2.5	3.5	2.5	3.8	2.4	4.0	2.4
40 (4.5)	68	20.0	4.2	3.1	4.4	3.2	4.7	3.2	4.8	3.4	5.0	3.3	5.3	3.3	5.5	3.2
	73	22.5	4.2	3.1	4.4	3.2	4.6	3.2	4.8	3.3	4.9	3.3	5.2	3.3	5.5	3.2
	77	25.0	4.1	3.0	4.3	3.2	4.6	3.1	4.7	3.3	4.9	3.3	5.2	3.2	5.4	3.2
	82	27.5	4.1	3.0	4.3	3.1	4.5	3.1	4.7	3.3	4.8	3.3	5.1	3.2	5.4	3.1
	86	30.0	4.0	3.0	4.2	3.1	4.5	3.1	4.6	3.3	4.8	3.2	5.1	3.2	5.3	3.1
	91	32.5	4.0	3.0	4.2	3.1	4.4	3.1	4.6	3.2	4.7	3.2	5.0	3.2	5.3	3.1
	95	35.0	3.9	2.9	4.1	3.1	4.4	3.0	4.5	3.2	4.6	3.2	4.9	3.2	5.2	3.1
	100	37.5	3.8	2.9	4.0	3.0	4.3	3.0	4.5	3.2	4.6	3.2	4.9	3.1	5.1	3.1
	104	40.0	3.8	2.9	4.0	3.0	4.3	3.0	4.4	3.2	4.5	3.1	4.8	3.1	5.1	3.0
	110	43.0	3.7	2.8	3.9	2.9	4.2	3.0	4.3	3.1	4.4	3.1	4.8	3.1	5.0	3.0
50 (5.6)	68	20.0	5.3	3.9	5.5	4.1	5.8	4.0	6.0	4.2	6.2	4.2	6.6	4.2	6.9	4.1
	73	22.5	5.2	3.9	5.5	4.0	5.8	4.0	6.0	4.2	6.1	4.2	6.5	4.1	6.8	4.0
	77	25.0	5.2	3.8	5.4	4.0	5.7	4.0	5.9	4.2	6.1	4.2	6.4	4.1	6.7	4.0
	82	27.5	5.1	3.8	5.3	4.0	5.7	3.9	5.8	4.2	6.0	4.1	6.4	4.1	6.7	4.0
	86	30.0	5.0	3.8	5.3	3.9	5.6	3.9	5.8	4.1	5.9	4.1	6.3	4.1	6.6	4.0
	91	32.5	4.9	3.7	5.2	3.9	5.5	3.9	5.7	4.1	5.9	4.1	6.2	4.0	6.5	3.9
	95	35.0	4.9	3.7	5.1	3.9	5.5	3.8	5.6	4.1	5.8	4.0	6.2	4.0	6.5	3.9
	100	37.5	4.8	3.7	5.0	3.8	5.4	3.8	5.5	4.0	5.7	4.0	6.1	4.0	6.4	3.9
	104	40.0	4.7	3.6	4.9	3.8	5.3	3.8	5.5	4.0	5.6	4.0	6.0	3.9	6.3	3.9
	110	43.0	4.6	3.6	4.8	3.7	5.2	3.7	5.4	4.0	5.5	3.9	5.9	3.9	6.2	3.8
63 (7.1)	68	20.0	6.7	4.8	7.0	5.0	7.4	5.0	7.6	5.2	7.9	5.2	8.3	5.1	8.7	5.0
	73	22.5	6.6	4.8	6.9	5.0	7.3	4.9	7.6	5.2	7.8	5.2	8.2	5.1	8.6	5.0
	77	25.0	6.5	4.8	6.9	5.0	7.2	4.9	7.5	5.2	7.7	5.1	8.2	5.1	8.5	4.9
	82	27.5	6.5	4.7	6.8	4.9	7.2	4.9	7.4	5.1	7.6	5.1	8.1	5.0	8.5	4.9
	86	30.0	6.4	4.7	6.7	4.9	7.1	4.8	7.3	5.1	7.5	5.1	8.0	5.0	8.4	4.9
	91	32.5	6.3	4.6	6.6	4.8	7.0	4.8	7.2	5.0	7.4	5.0	7.9	5.0	8.3	4.8
	95	35.0	6.2	4.6	6.5	4.8	6.9	4.7	7.1	5.0	7.3	5.0	7.8	4.9	8.2	4.8
	100	37.5	6.1	4.5	6.4	4.7	6.8	4.7	7.0	5.0	7.2	4.9	7.7	4.9	8.1	4.8
	104	40.0	5.9	4.5	6.3	4.7	6.8	4.7	6.9	4.9	7.1	4.9	7.6	4.8	8.0	4.7
	110	43.0	5.8	4.4	6.1	4.6	6.6	4.6	6.8	4.9	6.9	4.8	7.5	4.8	7.9	4.7

kcal/h = kW x 860, Btu/h = kW x 3,412

CT

X1. Heating capacity with PUHY-P200, 250YHM/PUHY-EP200, 250YHM PURY-P200, 250YHM/PURY-EP200, 250YHM

SHC : Sensible Heat Capacity(kW)

Model size (Rated kW)	Outdoor air temp.		Indoor air temp.			
			59 ˚FDB	68 ˚FDB	77 ˚FDB	81 ˚FDB
			15.0˚CDB	20.0˚CDB	25.0˚CDB	27.0˚CDB
	˚FWB	˚CWB	SHC	SHC	SHC	SHC
15 (1.9)	-4	-20.0	1.0	1.0	1.0	1.0
	5	-15.0	1.2	1.1	1.1	1.1
	14	-10.0	1.4	1.4	1.4	1.3
	23	-5.0	1.6	1.6	1.5	1.4
	32	0.0	1.8	1.8	1.5	1.4
	37	2.5	1.9	1.9	1.5	1.4
	43	6.0	2.0	1.9	1.5	1.4
	46	7.5	2.1	1.9	1.5	1.4
	50	10.0	2.2	1.9	1.5	1.4
	55	12.5	2.3	1.9	1.5	1.4
	60	15.5	2.4	1.9	1.5	1.4
20 (2.5)	-4	-20.0	1.3	1.3	1.3	1.3
	5	-15.0	1.6	1.5	1.5	1.5
	14	-10.0	1.8	1.8	1.8	1.7
	23	-5.0	2.1	2.1	2.0	1.8
	32	0.0	2.4	2.4	2.0	1.8
	37	2.5	2.5	2.5	2.0	1.8
	43	6.0	2.6	2.5	2.0	1.8
	46	7.5	2.7	2.5	2.0	1.8
	50	10.0	2.9	2.5	2.0	1.8
	55	12.5	3.0	2.5	2.0	1.8
	60	15.5	3.2	2.5	2.0	1.8
25 (3.2)	-4	-20.0	1.6	1.6	1.6	1.6
	5	-15.0	2.0	2.0	1.9	1.9
	14	-10.0	2.3	2.3	2.2	2.2
	23	-5.0	2.7	2.7	2.6	2.2
	32	0.0	3.0	3.0	2.6	2.2
	37	2.5	3.2	3.2	2.6	2.2
	43	6.0	3.3	3.2	2.6	2.2
	46	7.5	3.4	3.2	2.6	2.2
	50	10.0	3.6	3.2	2.6	2.2
	55	12.5	3.9	3.2	2.6	2.2
	60	15.5	4.1	3.2	2.6	2.2
32 (4.0)	-4	-20.0	2.1	2.0	2.0	2.0
	5	-15.0	2.5	2.4	2.4	2.4
	14	-10.0	2.9	2.9	2.8	2.7
	23	-5.0	3.4	3.3	3.2	2.8
	32	0.0	3.8	3.8	3.2	2.8
	37	2.5	4.0	4.0	3.2	2.8
	43	6.0	4.2	4.0	3.2	2.8
	46	7.5	4.3	4.0	3.2	2.8
	50	10.0	4.6	4.0	3.2	2.8
	55	12.5	4.8	4.0	3.2	2.8
	60	15.5	5.1	4.0	3.2	2.8
40 (5.0)	-4	-20.0	2.6	2.5	2.5	2.5
	5	-15.0	3.1	3.1	3.0	3.0
	14	-10.0	3.7	3.6	3.5	3.4
	23	-5.0	4.2	4.2	4.0	3.5
	32	0.0	4.7	4.7	4.0	3.5
	37	2.5	5.0	5.0	4.0	3.5
	43	6.0	5.2	5.0	4.0	3.5
	46	7.5	5.4	5.0	4.0	3.5
	50	10.0	5.7	5.0	4.0	3.5
	55	12.5	6.0	5.0	4.0	3.5
	60	15.5	6.4	5.0	4.0	3.5
50 (6.3)	-4	-20.0	3.2	3.2	3.2	3.2
	5	-15.0	3.9	3.8	3.8	3.7
	14	-10.0	4.6	4.5	4.4	4.3
	23	-5.0	5.3	5.2	5.0	4.4
	32	0.0	6.0	5.9	5.0	4.4
	37	2.5	6.3	6.2	5.0	4.4
	43	6.0	6.6	6.3	5.0	4.4
	46	7.5	6.8	6.3	5.0	4.4
	50	10.0	7.2	6.3	5.0	4.4
	55	12.5	7.6	6.3	5.0	4.4
	60	15.5	8.1	6.3	5.0	4.4
63 (8.0)	-4	-20.0	4.1	4.0	4.0	4.0
	5	-15.0	5.0	4.9	4.8	4.7
	14	-10.0	5.8	5.8	5.6	5.5
	23	-5.0	6.7	6.6	6.4	5.6
	32	0.0	7.6	7.5	6.4	5.6
	37	2.5	8.0	7.9	6.4	5.6
	43	6.0	8.3	8.0	6.4	5.6
	46	7.5	8.6	8.0	6.4	5.6
	50	10.0	9.1	8.0	6.4	5.6
	55	12.5	9.6	8.0	6.4	5.6
	60	15.5	10.2	8.0	6.4	5.6

Model size (Rated kW)	Outdoor air temp.		Indoor air temp.			
			59 ˚FDB	68 ˚FDB	77 ˚FDB	81 ˚FDB
			15.0˚CDB	20.0˚CDB	25.0˚CDB	27.0˚CDB
	˚FWB	˚CWB	SHC	SHC	SHC	SHC
71 (9.0)	-4	-20.0	4.6	4.5	4.5	4.5
	5	-15.0	5.6	5.5	5.4	5.3
	14	-10.0	6.6	6.5	6.3	6.2
	23	-5.0	7.6	7.5	7.2	6.3
	32	0.0	8.5	8.5	7.2	6.3
	37	2.5	9.0	8.9	7.2	6.3
	43	6.0	9.4	9.0	7.2	6.3
	46	7.5	9.7	9.0	7.2	6.3
	50	10.0	10.3	9.0	7.2	6.3
	55	12.5	10.8	9.0	7.2	6.3
	60	15.5	11.5	9.0	7.2	6.3
80 (10.0)	-4	-20.0	5.2	5.0	5.0	5.0
	5	-15.0	6.2	6.1	6.0	5.9
	14	-10.0	7.3	7.2	7.0	6.9
	23	-5.0	8.4	8.3	8.0	7.0
	32	0.0	9.5	9.4	8.0	7.0
	37	2.5	10.0	9.9	8.0	7.0
	43	6.0	10.4	10.0	8.0	7.0
	46	7.5	10.8	10.0	8.0	7.0
	50	10.0	11.4	10.0	8.0	7.0
	55	12.5	12.1	10.0	8.0	7.0
	60	15.5	12.8	10.0	8.0	7.0
100 (12.5)	-4	-20.0	6.4	6.3	6.3	6.3
	5	-15.0	7.8	7.6	7.5	7.4
	14	-10.0	9.1	9.0	8.8	8.6
	23	-5.0	10.5	10.4	10.0	8.8
	32	0.0	11.8	11.8	10.0	8.8
	37	2.5	12.5	12.4	10.0	8.8
	43	6.0	13.0	12.5	10.0	8.8
	46	7.5	13.4	12.5	10.0	8.8
	50	10.0	14.3	12.5	10.0	8.8
	55	12.5	15.1	12.5	10.0	8.8
	60	15.5	16.0	12.5	10.0	8.8
125 (16.0)	-4	-20.0	8.2	8.0	8.0	8.0
	5	-15.0	9.9	9.8	9.6	9.4
	14	-10.0	11.7	11.5	11.2	11.0
	23	-5.0	13.4	13.3	12.8	11.2
	32	0.0	15.1	15.0	12.8	11.2
	37	2.5	16.0	15.8	12.8	11.2
	43	6.0	16.6	16.0	12.8	11.2
	46	7.5	17.2	16.0	12.8	11.2
	50	10.0	18.2	16.0	12.8	11.2
	55	12.5	19.3	16.0	12.8	11.2
	60	15.5	20.5	16.0	12.8	11.2
140 (18.0)	-4	-20.0	9.3	9.0	9.0	9.0
	5	-15.0	11.2	11.0	10.8	10.6
	14	-10.0	13.1	13.0	12.6	12.3
	23	-5.0	15.1	14.9	14.4	12.6
	32	0.0	17.0	16.9	14.4	12.6
	37	2.5	18.0	17.8	14.4	12.6
	43	6.0	18.7	18.0	14.4	12.6
	46	7.5	19.4	18.0	14.4	12.6
	50	10.0	20.5	18.0	14.4	12.6
	55	12.5	21.7	18.0	14.4	12.6
	60	15.5	23.0	18.0	14.4	12.6
200 (25.0)	-4	-20.0	12.9	12.5	12.5	12.5
	5	-15.0	15.5	15.3	15.0	14.8
	14	-10.0	18.3	18.0	17.5	17.1
	23	-5.0	21.0	20.8	20.0	17.5
	32	0.0	23.6	23.5	20.0	17.5
	37	2.5	25.0	24.8	20.0	17.5
	43	6.0	26.0	25.0	20.0	17.5
	46	7.5	26.9	25.0	20.0	17.5
	50	10.0	28.5	25.0	20.0	17.5
	55	12.5	30.1	25.0	20.0	17.5
	60	15.5	32.0	25.0	20.0	17.5
250 (31.5)	-4	-20.0	16.2	15.8	15.8	15.8
	5	-15.0	19.5	19.2	18.9	18.6
	14	-10.0	23.0	22.7	22.1	21.6
	23	-5.0	26.5	26.1	25.2	22.1
	32	0.0	29.8	29.6	25.2	22.1
	37	2.5	31.5	31.2	25.2	22.1
	43	6.0	32.8	31.5	25.2	22.1
	46	7.5	33.9	31.5	25.2	22.1
	50	10.0	35.9	31.5	25.2	22.1
	55	12.5	38.0	31.5	25.2	22.1
	60	15.5	40.3	31.5	25.2	22.1

kcal/h = kW x 860, Btu/h = kW x 3,412

X2. Heating capacity with PUHY-P300-400YHM /PUHY-EP300, 400Y(S)HM PURY-P300-400YHM /PURY-EP300, 400Y(S)HM

SHC : Sensible Heat Capacity(kW)

Model size (Rated kW)	Outdoor air temp.		Indoor air temp.			
			59 ˚FDB	68 ˚FDB	77 ˚FDB	81 ˚FDB
			15.0˚CDB	20.0˚CDB	25.0˚CDB	27.0˚CDB
	˚FWB	˚CWB	SHC	SHC	SHC	SHC
15 (1.9)	-4	-20.0	1.0	1.0	1.0	0.9
	5	-15.0	1.1	1.1	1.1	1.1
	14	-10.0	1.4	1.4	1.3	1.3
	23	-5.0	1.5	1.5	1.4	1.4
	32	0.0	1.7	1.7	1.5	1.4
	37	2.5	1.8	1.8	1.5	1.4
	43	6.0	2.0	1.9	1.5	1.4
	46	7.5	2.1	1.9	1.5	1.4
	50	10.0	2.1	1.9	1.5	1.4
	55	12.5	2.2	1.9	1.5	1.4
	60	15.5	2.2	1.9	1.5	1.4
20 (2.5)	-4	-20.0	1.3	1.3	1.3	1.2
	5	-15.0	1.5	1.5	1.5	1.5
	14	-10.0	1.8	1.8	1.7	1.6
	23	-5.0	2.0	2.0	1.9	1.6
	32	0.0	2.3	2.3	1.9	1.6
	37	2.5	2.4	2.4	1.9	1.6
	43	6.0	2.6	2.5	1.9	1.6
	46	7.5	2.7	2.5	1.9	1.6
	50	10.0	2.8	2.5	1.9	1.6
	55	12.5	2.9	2.5	1.9	1.6
	60	15.5	2.9	2.5	1.9	1.6
25 (3.2)	-4	-20.0	1.7	1.6	1.6	1.5
	5	-15.0	1.9	1.9	1.9	1.9
	14	-10.0	2.2	2.2	2.2	2.0
	23	-5.0	2.6	2.6	2.4	2.0
	32	0.0	2.9	2.9	2.4	2.0
	37	2.5	3.1	3.0	2.4	2.0
	43	6.0	3.3	3.2	2.4	2.0
	46	7.5	3.4	3.2	2.4	2.0
	50	10.0	3.5	3.2	2.4	2.0
	55	12.5	3.7	3.2	2.4	2.0
	60	15.5	3.7	3.2	2.4	2.0
32 (4.0)	-4	-20.0	2.1	2.0	2.0	1.9
	5	-15.0	2.4	2.4	2.4	2.3
	14	-10.0	2.8	2.8	2.7	2.6
	23	-5.0	3.2	3.2	3.0	2.6
	32	0.0	3.6	3.6	3.0	2.6
	37	2.5	3.8	3.8	3.0	2.6
	43	6.0	4.1	4.0	3.0	2.6
	46	7.5	4.2	4.0	3.0	2.6
	50	10.0	4.4	4.0	3.0	2.6
	55	12.5	4.6	4.0	3.0	2.6
	60	15.5	4.6	4.0	3.0	2.6
40 (5.0)	-4	-20.0	2.6	2.5	2.5	2.4
	5	-15.0	3.0	3.0	3.0	2.9
	14	-10.0	3.5	3.5	3.4	3.2
	23	-5.0	4.0	4.0	3.8	3.2
	32	0.0	4.5	4.5	3.8	3.2
	37	2.5	4.8	4.7	3.8	3.2
	43	6.0	5.1	5.0	3.8	3.2
	46	7.5	5.3	5.0	3.8	3.2
	50	10.0	5.5	5.0	3.8	3.2
	55	12.5	5.8	5.0	3.8	3.2
	60	15.5	5.8	5.0	3.8	3.2
50 (6.3)	-4	-20.0	3.3	3.2	3.2	3.0
	5	-15.0	3.8	3.8	3.8	3.7
	14	-10.0	4.4	4.4	4.3	4.0
	23	-5.0	5.0	5.0	4.7	4.0
	32	0.0	5.7	5.7	4.7	4.0
	37	2.5	6.0	6.0	4.7	4.0
	43	6.0	6.5	6.3	4.7	4.0
	46	7.5	6.7	6.3	4.7	4.0
	50	10.0	7.0	6.3	4.7	4.0
	55	12.5	7.2	6.3	4.7	4.0
	60	15.5	7.2	6.3	4.7	4.0
63 (8.0)	-4	-20.0	4.2	4.0	4.0	3.8
	5	-15.0	4.8	4.8	4.8	4.6
	14	-10.0	5.6	5.6	5.5	5.1
	23	-5.0	6.4	6.4	6.0	5.1
	32	0.0	7.2	7.2	6.0	5.1
	37	2.5	7.6	7.6	6.0	5.1
	43	6.0	8.2	8.0	6.0	5.1
	46	7.5	8.5	8.0	6.0	5.1
	50	10.0	8.8	8.0	6.0	5.1
	55	12.5	9.2	8.0	6.0	5.1
	60	15.5	9.2	8.0	6.0	5.1

Model size (Rated kW)	Outdoor air temp.		Indoor air temp.			
			59 ˚FDB	68 ˚FDB	77 ˚FDB	81 ˚FDB
			15.0˚CDB	20.0˚CDB	25.0˚CDB	27.0˚CDB
	˚FWB	˚CWB	SHC	SHC	SHC	SHC
71 (9.0)	-4	-20.0	4.7	4.5	4.5	4.3
	5	-15.0	5.4	5.4	5.4	5.2
	14	-10.0	6.3	6.3	6.2	5.8
	23	-5.0	7.2	7.2	6.8	5.8
	32	0.0	8.1	8.1	6.8	5.8
	37	2.5	8.6	8.5	6.8	5.8
	43	6.0	9.2	9.0	6.8	5.8
	46	7.5	9.5	9.0	6.8	5.8
	50	10.0	9.9	9.0	6.8	5.8
	55	12.5	10.4	9.0	6.8	5.8
	60	15.5	10.4	9.0	6.8	5.8
80 (10.0)	-4	-20.0	5.2	5.0	5.0	4.8
	5	-15.0	6.0	6.0	6.0	5.8
	14	-10.0	7.0	7.0	6.9	6.4
	23	-5.0	8.0	8.0	7.5	6.4
	32	0.0	9.0	9.0	7.5	6.4
	37	2.5	9.6	9.5	7.5	6.4
	43	6.0	10.3	10.0	7.5	6.4
	46	7.5	10.6	10.0	7.5	6.4
	50	10.0	11.1	10.0	7.5	6.4
	55	12.5	11.5	10.0	7.5	6.4
	60	15.5	11.5	10.0	7.5	6.4
100 (12.5)	-4	-20.0	6.5	6.3	6.3	6.0
	5	-15.0	7.5	7.5	7.5	7.3
	14	-10.0	8.8	8.8	8.6	8.0
	23	-5.0	10.0	10.0	9.4	8.0
	32	0.0	11.3	11.3	9.4	8.0
	37	2.5	11.9	11.8	9.4	8.0
	43	6.0	12.8	12.5	9.4	8.0
	46	7.5	13.3	12.5	9.4	8.0
	50	10.0	13.8	12.5	9.4	8.0
	55	12.5	14.4	12.5	9.4	8.0
	60	15.5	14.4	12.5	9.4	8.0
125 (16.0)	-4	-20.0	8.3	8.0	8.0	7.7
	5	-15.0	9.6	9.6	9.6	9.3
	14	-10.0	11.2	11.2	11.0	10.2
	23	-5.0	12.8	12.8	12.0	10.2
	32	0.0	14.4	14.4	12.0	10.2
	37	2.5	15.3	15.1	12.0	10.2
	43	6.0	16.4	16.0	12.0	10.2
	46	7.5	17.0	16.0	12.0	10.2
	50	10.0	17.7	16.0	12.0	10.2
	55	12.5	18.4	16.0	12.0	10.2
	60	15.5	18.4	16.0	12.0	10.2
140 (18.0)	-4	-20.0	9.4	9.0	9.0	8.6
	5	-15.0	10.8	10.8	10.8	10.4
	14	-10.0	12.6	12.6	12.3	11.5
	23	-5.0	14.4	14.4	13.5	11.5
	32	0.0	16.2	16.2	13.5	11.5
	37	2.5	17.2	17.0	13.5	11.5
	43	6.0	18.5	18.0	13.5	11.5
	46	7.5	19.1	18.0	13.5	11.5
	50	10.0	19.9	18.0	13.5	11.5
	55	12.5	20.7	18.0	13.5	11.5
	60	15.5	20.7	18.0	13.5	11.5
200 (25.0)	-4	-20.0	13.0	12.5	12.5	12.0
	5	-15.0	15.0	15.0	15.0	14.5
	14	-10.0	17.5	17.5	17.1	16.0
	23	-5.0	20.0	20.0	18.8	16.0
	32	0.0	22.5	22.5	18.8	16.0
	37	2.5	23.9	23.6	18.8	16.0
	43	6.0	25.6	25.0	18.8	16.0
	46	7.5	26.5	25.0	18.8	16.0
	50	10.0	27.6	25.0	18.8	16.0
	55	12.5	28.8	25.0	18.8	16.0
	60	15.5	28.8	25.0	18.8	16.0
250 (31.5)	-4	-20.0	16.4	15.8	15.8	15.1
	5	-15.0	18.9	18.9	18.9	18.3
	14	-10.0	22.1	22.1	21.6	20.2
	23	-5.0	25.2	25.2	23.6	20.2
	32	0.0	28.4	28.4	23.6	20.2
	37	2.5	30.1	29.8	23.6	20.2
	43	6.0	32.3	31.5	23.6	20.2
	46	7.5	33.4	31.5	23.6	20.2
	50	10.0	34.8	31.5	23.6	20.2
	55	12.5	36.2	31.5	23.6	20.2
	60	15.5	36.2	31.5	23.6	20.2

kcal/h = kW x 860, Btu/h = kW x 3,412

CT

X3. Heating capacity with PUHY-P450-650Y(S)HM/PUHY-EP450-650YSHM PURY-P450-650YSHM/PURY-EP450-600YSHM

SHC : Sensible Heat Capacity(kW)

Model size (Rated kW)	Outdoor air temp.		Indoor air temp.			
			59 ˚FDB	68 ˚FDB	77 ˚FDB	81 ˚FDB
			15.0˚CDB	20.0˚CDB	25.0˚CDB	27.0˚CDB
	˚FWB	˚CWB	SHC	SHC	SHC	SHC
15 (1.9)	-4	-20.0	1.0	1.0	1.0	1.0
	5	-15.0	1.2	1.1	1.1	1.1
	14	-10.0	1.4	1.4	1.3	1.3
	23	-5.0	1.6	1.5	1.4	1.4
	32	0.0	1.7	1.7	1.5	1.4
	37	2.5	1.8	1.8	1.5	1.4
	43	6.0	2.0	1.9	1.5	1.4
	46	7.5	2.1	1.9	1.5	1.4
	50	10.0	2.1	1.9	1.5	1.4
	55	12.5	2.2	1.9	1.5	1.4
	60	15.5	2.2	1.9	1.5	1.4
20 (2.5)	-4	-20.0	1.3	1.3	1.3	1.3
	5	-15.0	1.6	1.5	1.5	1.5
	14	-10.0	1.8	1.8	1.7	1.7
	23	-5.0	2.1	2.0	1.9	1.8
	32	0.0	2.3	2.3	2.0	1.8
	37	2.5	2.4	2.4	2.0	1.8
	43	6.0	2.6	2.5	2.0	1.8
	46	7.5	2.7	2.5	2.0	1.8
	50	10.0	2.8	2.5	2.0	1.8
	55	12.5	2.9	2.5	2.0	1.8
	60	15.5	2.9	2.5	2.0	1.8
25 (3.2)	-4	-20.0	1.7	1.6	1.6	1.6
	5	-15.0	2.0	1.9	1.9	1.9
	14	-10.0	2.3	2.2	2.2	2.1
	23	-5.0	2.6	2.6	2.5	2.3
	32	0.0	2.9	2.9	2.5	2.3
	37	2.5	3.1	3.0	2.5	2.3
	43	6.0	3.3	3.2	2.5	2.3
	46	7.5	3.4	3.2	2.5	2.3
	50	10.0	3.6	3.2	2.5	2.3
	55	12.5	3.7	3.2	2.5	2.3
	60	15.5	3.7	3.2	2.5	2.3
32 (4.0)	-4	-20.0	2.1	2.0	2.0	2.0
	5	-15.0	2.5	2.4	2.4	2.3
	14	-10.0	2.9	2.8	2.7	2.6
	23	-5.0	3.3	3.2	3.1	2.8
	32	0.0	3.7	3.6	3.2	2.8
	37	2.5	3.8	3.8	3.2	2.8
	43	6.0	4.1	4.0	3.2	2.8
	46	7.5	4.2	4.0	3.2	2.8
	50	10.0	4.4	4.0	3.2	2.8
	55	12.5	4.6	4.0	3.2	2.8
	60	15.5	4.6	4.0	3.2	2.8
40 (5.0)	-4	-20.0	2.7	2.6	2.6	2.5
	5	-15.0	3.1	3.0	3.0	2.9
	14	-10.0	3.6	3.5	3.4	3.3
	23	-5.0	4.1	4.0	3.9	3.5
	32	0.0	4.6	4.5	4.0	3.5
	37	2.5	4.8	4.8	4.0	3.5
	43	6.0	5.2	5.0	4.0	3.5
	46	7.5	5.3	5.0	4.0	3.5
	50	10.0	5.6	5.0	4.0	3.5
	55	12.5	5.8	5.0	4.0	3.5
	60	15.5	5.8	5.0	4.0	3.5
50 (6.3)	-4	-20.0	3.3	3.2	3.2	3.2
	5	-15.0	3.9	3.8	3.8	3.7
	14	-10.0	4.5	4.4	4.3	4.2
	23	-5.0	5.2	5.0	4.9	4.4
	32	0.0	5.8	5.7	5.0	4.4
	37	2.5	6.0	6.0	5.0	4.4
	43	6.0	6.5	6.3	5.0	4.4
	46	7.5	6.7	6.3	5.0	4.4
	50	10.0	7.0	6.3	5.0	4.4
	55	12.5	7.3	6.3	5.0	4.4
	60	15.5	7.3	6.3	5.0	4.4
63 (8.0)	-4	-20.0	4.2	4.1	4.1	4.0
	5	-15.0	5.0	4.8	4.8	4.6
	14	-10.0	5.8	5.6	5.4	5.3
	23	-5.0	6.6	6.4	6.2	5.6
	32	0.0	7.4	7.2	6.4	5.6
	37	2.5	7.7	7.6	6.4	5.6
	43	6.0	8.2	8.0	6.4	5.6
	46	7.5	8.5	8.0	6.4	5.6
	50	10.0	8.9	8.0	6.4	5.6
	55	12.5	9.3	8.0	6.4	5.6
	60	15.5	9.3	8.0	6.4	5.6

Model size (Rated kW)	Outdoor air temp.		Indoor air temp.			
			59 ˚FDB	68 ˚FDB	77 ˚FDB	81 ˚FDB
			15.0˚CDB	20.0˚CDB	25.0˚CDB	27.0˚CDB
	˚FWB	˚CWB	SHC	SHC	SHC	SHC
71 (9.0)	-4	-20.0	4.8	4.6	4.6	4.5
	5	-15.0	5.6	5.4	5.4	5.2
	14	-10.0	6.5	6.3	6.1	5.9
	23	-5.0	7.4	7.2	6.9	6.3
	32	0.0	8.3	8.1	7.2	6.3
	37	2.5	8.6	8.6	7.2	6.3
	43	6.0	9.3	9.0	7.2	6.3
	46	7.5	9.5	9.0	7.2	6.3
	50	10.0	10.0	9.0	7.2	6.3
	55	12.5	10.4	9.0	7.2	6.3
	60	15.5	10.4	9.0	7.2	6.3
80 (10.0)	-4	-20.0	5.3	5.1	5.1	5.0
	5	-15.0	6.3	6.1	6.0	5.8
	14	-10.0	7.2	7.0	6.8	6.6
	23	-5.0	8.2	8.0	7.7	7.1
	32	0.0	9.2	9.0	8.0	7.1
	37	2.5	9.6	9.5	8.0	7.1
	43	6.0	10.3	10.0	8.0	7.1
	46	7.5	10.6	10.0	8.0	7.1
	50	10.0	11.1	10.0	8.0	7.1
	55	12.5	11.6	10.0	8.0	7.1
	60	15.5	11.6	10.0	8.0	7.1
100 (12.5)	-4	-20.0	6.6	6.4	6.4	6.3
	5	-15.0	7.8	7.6	7.5	7.3
	14	-10.0	9.0	8.8	8.5	8.3
	23	-5.0	10.3	10.0	9.6	8.8
	32	0.0	11.5	11.3	9.9	8.8
	37	2.5	12.0	11.9	9.9	8.8
	43	6.0	12.9	12.5	9.9	8.8
	46	7.5	13.3	12.5	9.9	8.8
	50	10.0	13.9	12.5	9.9	8.8
	55	12.5	14.5	12.5	9.9	8.8
	60	15.5	14.5	12.5	9.9	8.8
125 (16.0)	-4	-20.0	8.5	8.2	8.2	8.0
	5	-15.0	10.0	9.7	9.6	9.3
	14	-10.0	11.5	11.2	10.9	10.6
	23	-5.0	13.1	12.8	12.3	11.3
	32	0.0	14.7	14.4	12.7	11.3
	37	2.5	15.4	15.2	12.7	11.3
	43	6.0	16.5	16.0	12.7	11.3
	46	7.5	17.0	16.0	12.7	11.3
	50	10.0	17.8	16.0	12.7	11.3
	55	12.5	18.6	16.0	12.7	11.3
	60	15.5	18.6	16.0	12.7	11.3
140 (18.0)	-4	-20.0	9.5	9.2	9.2	9.0
	5	-15.0	11.3	10.9	10.8	10.4
	14	-10.0	13.0	12.6	12.2	11.9
	23	-5.0	14.8	14.4	13.9	12.7
	32	0.0	16.6	16.2	14.3	12.7
	37	2.5	17.3	17.1	14.3	12.7
	43	6.0	18.5	18.0	14.3	12.7
	46	7.5	19.1	18.0	14.3	12.7
	50	10.0	20.0	18.0	14.3	12.7
	55	12.5	20.9	18.0	14.3	12.7
	60	15.5	20.9	18.0	14.3	12.7
200 (25.0)	-4	-20.0	13.3	12.8	12.8	12.5
	5	-15.0	15.6	15.1	15.0	14.5
	14	-10.0	18.0	17.5	17.0	16.5
	23	-5.0	20.5	20.0	19.3	17.6
	32	0.0	23.0	22.5	19.9	17.6
	37	2.5	24.0	23.8	19.9	17.6
	43	6.0	25.8	25.0	19.9	17.6
	46	7.5	26.5	25.0	19.9	17.6
	50	10.0	27.8	25.0	19.9	17.6
	55	12.5	29.0	25.0	19.9	17.6
	60	15.5	29.0	25.0	19.9	17.6
250 (31.5)	-4	-20.0	16.7	16.1	16.1	15.8
	5	-15.0	19.7	19.1	18.9	18.3
	14	-10.0	22.7	22.1	21.4	20.8
	23	-5.0	25.8	25.2	24.3	22.2
	32	0.0	29.0	28.4	25.0	22.2
	37	2.5	30.2	29.9	25.0	22.2
	43	6.0	32.4	31.5	25.0	22.2
	46	7.5	33.4	31.5	25.0	22.2
	50	10.0	35.0	31.5	25.0	22.2
	55	12.5	36.5	31.5	25.0	22.2
	60	15.5	36.5	31.5	25.0	22.2

kcal/h = kW x 860, Btu/h = kW x 3,412

X4. Heating capacity with PUHY-P700-800YSHM/PUHY-EP700-800YSHM PURY-P700-800YSHM

SHC : Sensible Heat Capacity(kW)

Model size (Rated kW)	Outdoor air temp.		Indoor air temp.			
			59 ˚FDB	68 ˚FDB	77 ˚FDB	81 ˚FDB
			15.0˚CDB	20.0˚CDB	25.0˚CDB	27.0˚CDB
	˚FWB	˚CWB	SHC	SHC	SHC	SHC
15 (1.9)	-4	-20.0	1.0	1.0	1.0	0.9
	5	-15.0	1.1	1.1	1.1	1.1
	14	-10.0	1.4	1.4	1.3	1.2
	23	-5.0	1.5	1.5	1.4	1.2
	32	0.0	1.7	1.7	1.4	1.2
	37	2.5	1.8	1.8	1.4	1.2
	43	6.0	2.0	1.9	1.4	1.2
	46	7.5	2.1	1.9	1.4	1.2
	50	10.0	2.1	1.9	1.4	1.2
	55	12.5	2.2	1.9	1.4	1.2
	60	15.5	2.2	1.9	1.4	1.2
20 (2.5)	-4	-20.0	1.3	1.3	1.3	1.2
	5	-15.0	1.5	1.5	1.5	1.5
	14	-10.0	1.8	1.8	1.7	1.7
	23	-5.0	2.0	2.0	1.9	1.8
	32	0.0	2.3	2.2	2.0	1.8
	37	2.5	2.4	2.4	2.0	1.8
	43	6.0	2.6	2.5	2.0	1.8
	46	7.5	2.7	2.5	2.0	1.8
	50	10.0	2.8	2.5	2.0	1.8
	55	12.5	2.9	2.5	2.0	1.8
	60	15.5	2.9	2.5	2.0	1.8
25 (3.2)	-4	-20.0	1.6	1.6	1.6	1.6
	5	-15.0	2.0	1.9	1.9	1.9
	14	-10.0	2.3	2.2	2.2	2.1
	23	-5.0	2.6	2.6	2.5	2.4
	32	0.0	2.9	2.9	2.5	2.4
	37	2.5	3.1	3.0	2.5	2.4
	43	6.0	3.3	3.2	2.5	2.4
	46	7.5	3.4	3.2	2.5	2.4
	50	10.0	3.6	3.2	2.5	2.4
	55	12.5	3.7	3.2	2.5	2.4
	60	15.5	3.7	3.2	2.5	2.4
32 (4.0)	-4	-20.0	2.0	2.0	2.0	2.0
	5	-15.0	2.4	2.4	2.4	2.3
	14	-10.0	2.8	2.8	2.7	2.7
	23	-5.0	3.2	3.2	3.1	2.9
	32	0.0	3.6	3.6	3.2	2.9
	37	2.5	3.8	3.8	3.2	2.9
	43	6.0	4.1	4.0	3.2	2.9
	46	7.5	4.2	4.0	3.2	2.9
	50	10.0	4.4	4.0	3.2	2.9
	55	12.5	4.6	4.0	3.2	2.9
	60	15.5	4.6	4.0	3.2	2.9
40 (5.0)	-4	-20.0	2.5	2.5	2.5	2.5
	5	-15.0	3.1	3.0	3.0	2.9
	14	-10.0	3.6	3.5	3.4	3.4
	23	-5.0	4.1	4.0	3.9	3.7
	32	0.0	4.6	4.5	4.0	3.7
	37	2.5	4.8	4.7	4.0	3.7
	43	6.0	5.2	5.0	4.0	3.7
	46	7.5	5.3	5.0	4.0	3.7
	50	10.0	5.6	5.0	4.0	3.7
	55	12.5	5.8	5.0	4.0	3.7
	60	15.5	5.8	5.0	4.0	3.7
50 (6.3)	-4	-20.0	3.2	3.2	3.2	3.1
	5	-15.0	3.8	3.8	3.7	3.7
	14	-10.0	4.5	4.4	4.3	4.2
	23	-5.0	5.1	5.0	4.9	4.6
	32	0.0	5.7	5.6	5.0	4.6
	37	2.5	6.0	5.9	5.0	4.6
	43	6.0	6.5	6.3	5.0	4.6
	46	7.5	6.7	6.3	5.0	4.6
	50	10.0	7.0	6.3	5.0	4.6
	55	12.5	7.3	6.3	5.0	4.6
	60	15.5	7.3	6.3	5.0	4.6
63 (8.0)	-4	-20.0	4.0	4.0	4.0	3.9
	5	-15.0	4.9	4.8	4.8	4.6
	14	-10.0	5.7	5.6	5.4	5.4
	23	-5.0	6.5	6.4	6.2	5.9
	32	0.0	7.3	7.2	6.4	5.9
	37	2.5	7.7	7.5	6.4	5.9
	43	6.0	8.2	8.0	6.4	5.9
	46	7.5	8.5	8.0	6.4	5.9
	50	10.0	8.9	8.0	6.4	5.9
	55	12.5	9.3	8.0	6.4	5.9
	60	15.5	9.3	8.0	6.4	5.9

Model size (Rated kW)	Outdoor air temp.		Indoor air temp.			
			59 ˚FDB	68 ˚FDB	77 ˚FDB	81 ˚FDB
			15.0˚CDB	20.0˚CDB	25.0˚CDB	27.0˚CDB
	˚FWB	˚CWB	SHC	SHC	SHC	SHC
71 (9.0)	-4	-20.0	4.5	4.5	4.5	4.4
	5	-15.0	5.5	5.4	5.4	5.2
	14	-10.0	6.4	6.3	6.1	6.0
	23	-5.0	7.3	7.2	6.9	6.6
	32	0.0	8.2	8.1	7.2	6.6
	37	2.5	8.6	8.5	7.2	6.6
	43	6.0	9.3	9.0	7.2	6.6
	46	7.5	9.5	9.0	7.2	6.6
	50	10.0	10.0	9.0	7.2	6.6
	55	12.5	10.4	9.0	7.2	6.6
	60	15.5	10.4	9.0	7.2	6.6
80 (10.0)	-4	-20.0	5.0	5.0	4.9	4.9
	5	-15.0	6.1	6.0	6.0	5.8
	14	-10.0	7.1	7.0	6.8	6.7
	23	-5.0	8.1	8.0	7.7	7.4
	32	0.0	9.1	9.0	8.0	7.4
	37	2.5	9.6	9.4	8.0	7.4
	43	6.0	10.3	10.0	8.0	7.4
	46	7.5	10.6	10.0	8.0	7.4
	50	10.0	11.1	10.0	8.0	7.4
	55	12.5	11.6	10.0	8.0	7.4
	60	15.5	11.6	10.0	8.0	7.4
100 (12.5)	-4	-20.0	6.3	6.3	6.3	6.1
	5	-15.0	7.6	7.5	7.4	7.3
	14	-10.0	8.9	8.8	8.5	8.4
	23	-5.0	10.1	10.0	9.6	9.2
	32	0.0	11.4	11.2	9.9	9.2
	37	2.5	12.0	11.8	9.9	9.2
	43	6.0	12.9	12.5	9.9	9.2
	46	7.5	13.3	12.5	9.9	9.2
	50	10.0	13.9	12.5	9.9	9.2
	55	12.5	14.5	12.5	9.9	9.2
	60	15.5	14.5	12.5	9.9	9.2
125 (16.0)	-4	-20.0	8.0	8.0	8.0	7.8
	5	-15.0	9.8	9.6	9.5	9.3
	14	-10.0	11.4	11.2	10.9	10.7
	23	-5.0	13.0	12.8	12.3	11.8
	32	0.0	14.6	14.3	12.7	11.8
	37	2.5	15.4	15.0	12.7	11.8
	43	6.0	16.5	16.0	12.7	11.8
	46	7.5	17.0	16.0	12.7	11.8
	50	10.0	17.8	16.0	12.7	11.8
	55	12.5	18.6	16.0	12.7	11.8
	60	15.5	18.6	16.0	12.7	11.8
140 (18.0)	-4	-20.0	9.0	9.0	9.0	8.8
	5	-15.0	11.0	10.8	10.7	10.4
	14	-10.0	12.8	12.6	12.2	12.1
	23	-5.0	14.6	14.4	13.9	13.2
	32	0.0	16.4	16.1	14.3	13.2
	37	2.5	17.3	16.9	14.3	13.2
	43	6.0	18.5	18.0	14.3	13.2
	46	7.5	19.1	18.0	14.3	13.2
	50	10.0	20.0	18.0	14.3	13.2
	55	12.5	20.9	18.0	14.3	13.2
	60	15.5	20.9	18.0	14.3	13.2
200 (25.0)	-4	-20.0	12.5	12.5	12.5	12.3
	5	-15.0	15.3	15.0	14.9	14.5
	14	-10.0	17.8	17.5	17.0	16.8
	23	-5.0	20.3	20.0	19.3	18.4
	32	0.0	22.8	22.4	19.9	18.4
	37	2.5	24.0	23.5	19.9	18.4
	43	6.0	25.8	25.0	19.9	18.4
	46	7.5	26.5	25.0	19.9	18.4
	50	10.0	27.8	25.0	19.9	18.4
	55	12.5	29.0	25.0	19.9	18.4
	60	15.5	29.0	25.0	19.9	18.4
250 (31.5)	-4	-20.0	15.8	15.8	15.8	15.4
	5	-15.0	19.2	18.9	18.7	18.3
	14	-10.0	22.4	22.1	21.4	21.1
	23	-5.0	25.5	25.2	24.3	23.2
	32	0.0	28.7	28.2	25.0	23.2
	37	2.5	30.2	29.6	25.0	23.2
	43	6.0	32.4	31.5	25.0	23.2
	46	7.5	33.4	31.5	25.0	23.2
	50	10.0	35.0	31.5	25.0	23.2
	55	12.5	36.5	31.5	25.0	23.2
	60	15.5	36.5	31.5	25.0	23.2

kcal/h = kW x 860, Btu/h = kW x 3,412

CT

X5. Heating capacity with PUHY-P850-1250YSHM/PUHY-EP850-900YSHM

SHC : Sensible Heat Capacity(kW)

Model size (Rated kW)	Outdoor air temp.		Indoor air temp.			
			59 ˚FDB	68 ˚FDB	77 ˚FDB	81 ˚FDB
			15.0˚CDB	20.0˚CDB	25.0˚CDB	27.0˚CDB
	˚FWB	˚CWB	SHC	SHC	SHC	SHC
15 (1.9)	-4	-20.0	1.2	1.2	1.1	1.1
	5	-15.0	1.4	1.3	1.3	1.3
	14	-10.0	1.6	1.5	1.5	1.3
	23	-5.0	1.7	1.7	1.5	1.3
	32	0.0	1.8	1.8	1.5	1.3
	37	2.5	2.0	1.9	1.5	1.3
	43	6.0	2.0	1.9	1.5	1.3
	46	7.5	2.1	1.9	1.5	1.3
	50	10.0	2.2	1.9	1.5	1.3
	55	12.5	2.2	1.9	1.5	1.3
	60	15.5	2.2	1.9	1.5	1.3
20 (2.5)	-4	-20.0	1.6	1.5	1.5	1.4
	5	-15.0	1.8	1.8	1.7	1.7
	14	-10.0	2.0	2.0	1.9	1.8
	23	-5.0	2.3	2.2	2.0	1.8
	32	0.0	2.4	2.4	2.0	1.8
	37	2.5	2.6	2.5	2.0	1.8
	43	6.0	2.7	2.5	2.0	1.8
	46	7.5	2.8	2.5	2.0	1.8
	50	10.0	2.9	2.5	2.0	1.8
	55	12.5	2.9	2.5	2.0	1.8
	60	15.5	2.9	2.5	2.0	1.8
25 (3.2)	-4	-20.0	2.0	2.0	1.9	1.9
	5	-15.0	2.3	2.3	2.2	2.1
	14	-10.0	2.6	2.6	2.4	2.3
	23	-5.0	2.9	2.9	2.5	2.3
	32	0.0	3.1	3.1	2.5	2.3
	37	2.5	3.3	3.2	2.5	2.3
	43	6.0	3.4	3.2	2.5	2.3
	46	7.5	3.5	3.2	2.5	2.3
	50	10.0	3.7	3.2	2.5	2.3
	55	12.5	3.7	3.2	2.5	2.3
	60	15.5	3.7	3.2	2.5	2.3
32 (4.0)	-4	-20.0	2.5	2.4	2.4	2.3
	5	-15.0	2.9	2.8	2.7	2.6
	14	-10.0	3.3	3.2	3.1	2.8
	23	-5.0	3.7	3.6	3.2	2.8
	32	0.0	3.9	3.8	3.2	2.8
	37	2.5	4.1	4.0	3.2	2.8
	43	6.0	4.3	4.0	3.2	2.8
	46	7.5	4.4	4.0	3.2	2.8
	50	10.0	4.6	4.0	3.2	2.8
	55	12.5	4.6	4.0	3.2	2.8
	60	15.5	4.6	4.0	3.2	2.8
40 (5.0)	-4	-20.0	3.1	3.1	3.0	2.9
	5	-15.0	3.6	3.5	3.4	3.3
	14	-10.0	4.1	4.0	3.8	3.5
	23	-5.0	4.6	4.5	4.0	3.5
	32	0.0	4.9	4.8	4.0	3.5
	37	2.5	5.1	5.0	4.0	3.5
	43	6.0	5.3	5.0	4.0	3.5
	46	7.5	5.5	5.0	4.0	3.5
	50	10.0	5.8	5.0	4.0	3.5
	55	12.5	5.8	5.0	4.0	3.5
	60	15.5	5.8	5.0	4.0	3.5
50 (6.3)	-4	-20.0	3.9	3.8	3.7	3.7
	5	-15.0	4.5	4.4	4.3	4.2
	14	-10.0	5.1	5.1	4.8	4.5
	23	-5.0	5.8	5.7	5.0	4.5
	32	0.0	6.1	6.0	5.0	4.5
	37	2.5	6.5	6.3	5.0	4.5
	43	6.0	6.7	6.3	5.0	4.5
	46	7.5	7.0	6.3	5.0	4.5
	50	10.0	7.3	6.3	5.0	4.5
	55	12.5	7.3	6.3	5.0	4.5
	60	15.5	7.3	6.3	5.0	4.5
63 (8.0)	-4	-20.0	5.0	4.9	4.7	4.6
	5	-15.0	5.8	5.6	5.4	5.3
	14	-10.0	6.5	6.4	6.1	5.7
	23	-5.0	7.3	7.2	6.3	5.7
	32	0.0	7.8	7.6	6.3	5.7
	37	2.5	8.2	8.0	6.3	5.7
	43	6.0	8.5	8.0	6.3	5.7
	46	7.5	8.8	8.0	6.3	5.7
	50	10.0	9.2	8.0	6.3	5.7
	55	12.5	9.3	8.0	6.3	5.7
	60	15.5	9.3	8.0	6.3	5.7

Model size (Rated kW)	Outdoor air temp.		Indoor air temp.			
			59 ˚FDB	68 ˚FDB	77 ˚FDB	81 ˚FDB
			15.0˚CDB	20.0˚CDB	25.0˚CDB	27.0˚CDB
	˚FWB	˚CWB	SHC	SHC	SHC	SHC
71 (9.0)	-4	-20.0	5.6	5.5	5.3	5.2
	5	-15.0	6.5	6.4	6.1	6.0
	14	-10.0	7.4	7.2	6.9	6.4
	23	-5.0	8.2	8.1	7.1	6.4
	32	0.0	8.7	8.6	7.1	6.4
	37	2.5	9.3	9.0	7.1	6.4
	43	6.0	9.6	9.0	7.1	6.4
	46	7.5	9.9	9.0	7.1	6.4
	50	10.0	10.4	9.0	7.1	6.4
	55	12.5	10.4	9.0	7.1	6.4
	60	15.5	10.4	9.0	7.1	6.4
80 (10.0)	-4	-20.0	6.3	6.1	5.9	5.8
	5	-15.0	7.2	7.1	6.8	6.6
	14	-10.0	8.2	8.0	7.7	7.1
	23	-5.0	9.1	9.0	7.9	7.1
	32	0.0	9.7	9.5	7.9	7.1
	37	2.5	10.3	10.0	7.9	7.1
	43	6.0	10.7	10.0	7.9	7.1
	46	7.5	11.1	10.0	7.9	7.1
	50	10.0	11.5	10.0	7.9	7.1
	55	12.5	11.6	10.0	7.9	7.1
	60	15.5	11.6	10.0	7.9	7.1
100 (12.5)	-4	-20.0	7.8	7.6	7.4	7.2
	5	-15.0	9.0	8.8	8.5	8.3
	14	-10.0	10.2	10.0	9.6	8.9
	23	-5.0	11.4	11.2	9.9	8.9
	32	0.0	12.1	11.9	9.9	8.9
	37	2.5	12.9	12.5	9.9	8.9
	43	6.0	13.3	12.5	9.9	8.9
	46	7.5	13.8	12.5	9.9	8.9
	50	10.0	14.4	12.5	9.9	8.9
	55	12.5	14.5	12.5	9.9	8.9
	60	15.5	14.5	12.5	9.9	8.9
125 (16.0)	-4	-20.0	10.0	9.8	9.5	9.3
	5	-15.0	11.5	11.3	10.9	10.6
	14	-10.0	13.1	12.8	12.2	11.3
	23	-5.0	14.6	14.4	12.7	11.3
	32	0.0	15.5	15.3	12.7	11.3
	37	2.5	16.5	16.0	12.7	11.3
	43	6.0	17.1	16.0	12.7	11.3
	46	7.5	17.7	16.0	12.7	11.3
	50	10.0	18.5	16.0	12.7	11.3
	55	12.5	18.5	16.0	12.7	11.3
	60	15.5	18.6	16.0	12.7	11.3
140 (18.0)	-4	-20.0	11.3	11.0	10.7	10.4
	5	-15.0	13.0	12.7	12.2	11.9
	14	-10.0	14.7	14.4	13.8	12.8
	23	-5.0	16.4	16.1	14.3	12.8
	32	0.0	17.5	17.2	14.3	12.8
	37	2.5	18.5	18.0	14.3	12.8
	43	6.0	19.2	18.0	14.3	12.8
	46	7.5	19.9	18.0	14.3	12.8
	50	10.0	20.8	18.0	14.3	12.8
	55	12.5	20.8	18.0	14.3	12.8
	60	15.5	20.9	18.0	14.3	12.8
200 (25.0)	-4	-20.0	15.6	15.3	14.8	14.5
	5	-15.0	18.0	17.7	17.0	16.5
	14	-10.0	20.4	20.0	19.1	17.7
	23	-5.0	22.8	22.4	19.8	17.7
	32	0.0	24.3	23.9	19.8	17.7
	37	2.5	25.7	25.0	19.8	17.7
	43	6.0	26.7	25.0	19.8	17.7
	46	7.5	27.6	25.0	19.8	17.7
	50	10.0	28.9	25.0	19.8	17.7
	55	12.5	29.0	25.0	19.8	17.7
	60	15.5	29.0	25.0	19.8	17.7
250 (31.5)	-4	-20.0	19.7	19.2	18.7	18.3
	5	-15.0	22.7	22.2	21.4	20.8
	14	-10.0	25.7	25.3	24.1	22.3
	23	-5.0	28.8	28.3	25.0	22.3
	32	0.0	30.6	30.1	25.0	22.3
	37	2.5	32.4	31.5	25.0	22.3
	43	6.0	33.6	31.5	25.0	22.3
	46	7.5	34.8	31.5	25.0	22.3
	50	10.0	36.4	31.5	25.0	22.3
	55	12.5	36.5	31.5	24.9	22.3
	60	15.5	36.6	31.5	24.9	22.3

kcal/h = kW x 860, Btu/h = kW x 3,412

X6. Heating capacity with PUHY-HP200-500Y(S)HM

SHC : Sensible Heat Capacity(kW)

Model size (Rated kW)	Outdoor air temp.		Indoor air temp.			
			59 ˚FDB	68 ˚FDB	77 ˚FDB	81 ˚FDB
			15.0˚CDB	20.0˚CDB	25.0˚CDB	27.0˚CDB
	˚FWB	˚CWB	SHC	SHC	SHC	SHC
15 (1.9)	-13	-25.0	1.4	1.4	1.4	1.4
	-4	-20.0	1.7	1.7	1.6	1.4
	5	-15.0	1.9	1.9	1.6	1.4
	14	-10.0	2.1	1.9	1.6	1.4
	23	-5.0	2.2	1.9	1.6	1.4
	32	0.0	2.3	1.9	1.6	1.4
	37	2.5	2.3	1.9	1.6	1.4
	43	6.0	2.0	1.9	1.6	1.4
	46	7.5	2.1	1.9	1.6	1.4
	50	10.0	2.2	1.9	1.6	1.4
	55	12.5	2.3	1.9	1.6	1.4
	60	15.5	2.4	1.9	1.6	1.4
20 (2.5)	-13	-25.0	1.9	1.9	1.9	1.8
	-4	-20.0	2.2	2.2	2.1	1.8
	5	-15.0	2.5	2.5	2.1	1.8
	14	-10.0	2.8	2.5	2.1	1.8
	23	-5.0	2.9	2.5	2.1	1.8
	32	0.0	3.0	2.5	2.1	1.8
	37	2.5	3.1	2.5	2.1	1.8
	43	6.0	2.7	2.5	2.1	1.8
	46	7.5	2.8	2.5	2.1	1.8
	50	10.0	2.9	2.5	2.1	1.8
	55	12.5	3.0	2.5	2.1	1.8
	60	15.5	3.2	2.5	2.1	1.8
25 (3.2)	-13	-25.0	2.4	2.4	2.4	2.3
	-4	-20.0	2.8	2.8	2.7	2.3
	5	-15.0	3.2	3.2	2.7	2.3
	14	-10.0	3.5	3.2	2.7	2.3
	23	-5.0	3.7	3.2	2.7	2.3
	32	0.0	3.9	3.2	2.7	2.3
	37	2.5	3.9	3.2	2.7	2.3
	43	6.0	3.4	3.2	2.7	2.3
	46	7.5	3.5	3.2	2.7	2.3
	50	10.0	3.7	3.2	2.7	2.3
	55	12.5	3.9	3.2	2.7	2.3
	60	15.5	4.1	3.2	2.7	2.3
32 (4.0)	-13	-25.0	3.0	3.0	3.0	2.9
	-4	-20.0	3.5	3.5	3.4	2.9
	5	-15.0	4.0	4.0	3.4	2.9
	14	-10.0	4.4	4.0	3.4	2.9
	23	-5.0	4.6	4.0	3.4	2.9
	32	0.0	4.8	4.0	3.4	2.9
	37	2.5	4.9	4.0	3.4	2.9
	43	6.0	4.3	4.0	3.4	2.9
	46	7.5	4.4	4.0	3.4	2.9
	50	10.0	4.6	4.0	3.4	2.9
	55	12.5	4.9	4.0	3.4	2.9
	60	15.5	5.1	4.0	3.4	2.9
40 (5.0)	-13	-25.0	3.8	3.8	3.8	3.6
	-4	-20.0	4.4	4.4	4.2	3.6
	5	-15.0	5.0	5.0	4.2	3.6
	14	-10.0	5.5	5.0	4.2	3.6
	23	-5.0	5.8	5.0	4.2	3.6
	32	0.0	6.0	5.0	4.2	3.6
	37	2.5	6.1	5.0	4.2	3.6
	43	6.0	5.3	5.0	4.2	3.6
	46	7.5	5.5	5.0	4.2	3.6
	50	10.0	5.8	5.0	4.2	3.6
	55	12.5	6.1	5.0	4.2	3.6
	60	15.5	6.4	5.0	4.2	3.6
50 (6.3)	-13	-25.0	4.7	4.7	4.7	4.5
	-4	-20.0	5.5	5.5	5.3	4.5
	5	-15.0	6.3	6.3	5.3	4.5
	14	-10.0	6.9	6.3	5.3	4.5
	23	-5.0	7.3	6.3	5.3	4.5
	32	0.0	7.6	6.3	5.3	4.5
	37	2.5	7.7	6.3	5.3	4.5
	43	6.0	6.7	6.3	5.3	4.5
	46	7.5	6.9	6.3	5.3	4.5
	50	10.0	7.3	6.3	5.3	4.5
	55	12.5	7.6	6.3	5.3	4.5
	60	15.5	8.1	6.3	5.3	4.5
63 (8.0)	-13	-25.0	6.0	6.0	6.0	5.8
	-4	-20.0	7.0	7.0	6.7	5.8
	5	-15.0	8.0	8.0	6.7	5.8
	14	-10.0	8.8	8.0	6.7	5.8
	23	-5.0	9.2	8.0	6.7	5.8
	32	0.0	9.7	8.0	6.7	5.8
	37	2.5	9.8	8.0	6.7	5.8
	43	6.0	8.5	8.0	6.7	5.8
	46	7.5	8.8	8.0	6.7	5.8
	50	10.0	9.2	8.0	6.7	5.8
	55	12.5	9.7	8.0	6.7	5.8
	60	15.5	10.2	8.0	6.7	5.8

Model size (Rated kW)	Outdoor air temp.		Indoor air temp.			
			59 ˚FDB	68 ˚FDB	77 ˚FDB	81 ˚FDB
			15.0˚CDB	20.0˚CDB	25.0˚CDB	27.0˚CDB
	˚FWB	˚CWB	SHC	SHC	SHC	SHC
71 (9.0)	-13	-25.0	6.8	6.8	6.8	6.5
	-4	-20.0	7.9	7.9	7.6	6.5
	5	-15.0	9.0	9.0	7.6	6.5
	14	-10.0	9.9	9.0	7.6	6.5
	23	-5.0	10.4	9.0	7.6	6.5
	32	0.0	10.9	9.0	7.6	6.5
	37	2.5	11.0	9.0	7.6	6.5
	43	6.0	9.6	9.0	7.6	6.5
	46	7.5	9.9	9.0	7.6	6.5
	50	10.0	10.4	9.0	7.6	6.5
	55	12.5	10.9	9.0	7.6	6.5
	60	15.5	11.5	9.0	7.6	6.5
80 (10.0)	-13	-25.0	7.5	7.5	7.5	7.2
	-4	-20.0	8.8	8.8	8.4	7.2
	5	-15.0	10.0	10.0	8.4	7.2
	14	-10.0	11.0	10.0	8.4	7.2
	23	-5.0	11.6	10.0	8.4	7.2
	32	0.0	12.1	10.0	8.4	7.2
	37	2.5	12.3	10.0	8.4	7.2
	43	6.0	10.7	10.0	8.4	7.2
	46	7.5	11.0	10.0	8.4	7.2
	50	10.0	11.6	10.0	8.4	7.2
	55	12.5	12.1	10.0	8.4	7.2
	60	15.5	12.8	10.0	8.4	7.2
100 (12.5)	-13	-25.0	9.4	9.4	9.4	9.0
	-4	-20.0	11.0	11.0	10.5	9.0
	5	-15.0	12.5	12.5	10.5	9.0
	14	-10.0	13.8	12.5	10.5	9.0
	23	-5.0	14.4	12.5	10.5	9.0
	32	0.0	15.1	12.5	10.5	9.0
	37	2.5	15.3	12.5	10.5	9.0
	43	6.0	13.3	12.5	10.5	9.0
	46	7.5	13.8	12.5	10.5	9.0
	50	10.0	14.5	12.5	10.5	9.0
	55	12.5	15.2	12.5	10.5	9.0
	60	15.5	16.0	12.5	10.5	9.0
125 (16.0)	-13	-25.0	12.0	12.0	12.0	11.5
	-4	-20.0	14.1	14.1	13.4	11.5
	5	-15.0	16.0	16.0	13.4	11.5
	14	-10.0	17.6	16.0	13.4	11.5
	23	-5.0	18.5	16.0	13.4	11.5
	32	0.0	19.3	16.0	13.4	11.5
	37	2.5	19.6	16.0	13.4	11.5
	43	6.0	17.0	16.0	13.4	11.5
	46	7.5	17.6	16.0	13.4	11.5
	50	10.0	18.5	16.0	13.4	11.5
	55	12.5	19.4	16.0	13.4	11.5
	60	15.5	20.5	16.0	13.4	11.5
140 (18.0)	-13	-25.0	13.5	13.5	13.5	13.0
	-4	-20.0	15.8	15.8	15.1	13.0
	5	-15.0	18.0	18.0	15.1	13.0
	14	-10.0	19.8	18.0	15.1	13.0
	23	-5.0	20.8	18.0	15.1	13.0
	32	0.0	21.8	18.0	15.1	13.0
	37	2.5	22.1	18.0	15.1	13.0
	43	6.0	19.2	18.0	15.1	13.0
	46	7.5	19.8	18.0	15.1	13.0
	50	10.0	20.8	18.0	15.1	13.0
	55	12.5	21.8	18.0	15.1	13.0
	60	15.5	23.1	18.0	15.1	13.0
200 (25.0)	-13	-25.0	18.8	18.8	18.8	18.0
	-4	-20.0	22.0	22.0	21.0	18.0
	5	-15.0	25.0	25.0	21.0	18.0
	14	-10.0	27.5	25.0	21.0	18.0
	23	-5.0	28.9	25.0	21.0	18.0
	32	0.0	30.2	25.0	21.0	18.0
	37	2.5	30.6	25.0	21.0	18.0
	43	6.0	26.6	25.0	21.0	18.0
	46	7.5	27.5	25.0	21.0	18.0
	50	10.0	28.9	25.0	21.0	18.0
	55	12.5	30.3	25.0	21.0	18.0
	60	15.5	32.0	25.0	21.0	18.0
250 (31.5)	-13	-25.0	23.6	23.6	23.6	22.7
	-4	-20.0	27.7	27.7	26.5	22.7
	5	-15.0	31.5	31.5	26.5	22.7
	14	-10.0	34.7	31.5	26.5	22.7
	23	-5.0	36.4	31.5	26.5	22.7
	32	0.0	38.1	31.5	26.5	22.7
	37	2.5	38.6	31.5	26.5	22.7
	43	6.0	33.5	31.5	26.5	22.7
	46	7.5	34.7	31.5	26.5	22.7
	50	10.0	36.4	31.5	26.5	22.7
	55	12.5	38.2	31.5	26.5	22.7
	60	15.5	40.4	31.5	26.5	22.7

kcal/h = kW x 860, Btu/h = kW x 3,412

CT

X7. Heating capacity with PQHY-P200-900Y(S)HM PQRY-P200-600Y(S)HM

SHC : Sensible Heat Capacity(kW)

Model size (Rated kW)	Water temp.		Indoor air temp.				
			59 ˚FDB	66 ˚FDB	68 ˚FDB	77 ˚FDB	81 ˚FDB
			15.0˚CDB	19.0˚CDB	20.0˚CDB	25.0˚CDB	27.0˚CDB
	˚F	˚C	SHC	SHC	SHC	SHC	SHC
15 (1.9)	50	10	1.6	1.6	1.6	1.4	1.2
	68	20	1.9	1.9	1.9	1.6	1.4
	86	30	1.9	1.9	1.9	1.6	1.4
	104	40	1.9	1.9	1.9	1.6	1.4
	113	45	1.9	1.9	1.9	1.6	1.4
20 (2.5)	50	10	2.2	2.2	2.2	1.8	1.6
	68	20	2.5	2.5	2.5	2.1	1.9
	86	30	2.5	2.5	2.5	2.1	1.9
	104	40	2.5	2.5	2.5	2.1	1.9
	113	45	2.5	2.5	2.5	2.1	1.9
25 (3.2)	50	10	2.8	2.8	2.8	2.3	2.1
	68	20	3.2	3.2	3.2	2.6	2.4
	86	30	3.2	3.2	3.2	2.6	2.4
	104	40	3.2	3.2	3.2	2.6	2.4
	113	45	3.2	3.2	3.2	2.6	2.4
32 (4.0)	50	10	3.5	3.5	3.5	2.8	2.6
	68	20	4.0	4.0	4.0	3.3	3.0
	86	30	4.0	4.0	4.0	3.3	3.0
	104	40	4.0	4.0	4.0	3.3	3.0
	113	45	4.0	4.0	4.0	3.3	3.0
40 (5.0)	50	10	4.3	4.3	4.3	3.6	3.2
	68	20	5.0	5.0	5.0	4.1	3.8
	86	30	5.0	5.0	5.0	4.1	3.8
	104	40	5.0	5.0	5.0	4.1	3.8
	113	45	5.0	5.0	5.0	4.1	3.8
50 (6.3)	50	10	5.4	5.4	5.4	4.5	4.1
	68	20	6.3	6.3	6.3	5.2	4.7
	86	30	6.3	6.3	6.3	5.2	4.7
	104	40	6.3	6.3	6.3	5.2	4.7
	113	45	6.3	6.3	6.3	5.2	4.7
63 (8.0)	50	10	6.9	6.9	6.9	5.7	5.2
	68	20	8.0	8.0	8.0	6.6	6.0
	86	30	8.0	8.0	8.0	6.6	6.0
	104	40	8.0	8.0	8.0	6.6	6.0
	113	45	8.0	8.0	8.0	6.6	6.0
71 (9.0)	50	10	7.8	7.8	7.8	6.4	5.8
	68	20	9.0	9.0	9.0	7.4	6.8
	86	30	9.0	9.0	9.0	7.4	6.8
	104	40	9.0	9.0	9.0	7.4	6.8
	113	45	9.0	9.0	9.0	7.4	6.8
80 (10.0)	50	10	8.6	8.6	8.6	7.1	6.5
	68	20	10.0	10.0	10.0	8.2	7.5
	86	30	10.0	10.0	10.0	8.2	7.5
	104	40	10.0	10.0	10.0	8.2	7.5
	113	45	10.0	10.0	10.0	8.2	7.5
100 (12.5)	50	10	10.8	10.8	10.8	8.9	8.1
	68	20	12.5	12.5	12.5	10.3	9.4
	86	30	12.5	12.5	12.5	10.3	9.4
	104	40	12.5	12.5	12.5	10.3	9.4
	113	45	12.5	12.5	12.5	10.3	9.4
125 (16.0)	50	10	13.8	13.8	13.8	11.4	10.4
	68	20	16.0	16.0	16.0	13.2	12.0
	86	30	16.0	16.0	16.0	13.2	12.0
	104	40	16.0	16.0	16.0	13.2	12.0
	113	45	16.0	16.0	16.0	13.2	12.0
140 (18.0)	50	10	15.6	15.6	15.6	12.8	11.7
	68	20	18.0	18.0	18.0	14.8	13.5
	86	30	18.0	18.0	18.0	14.8	13.5
	104	40	18.0	18.0	18.0	14.8	13.5
	113	45	18.0	18.0	18.0	14.8	13.5
200 (25.0)	50	10	21.6	21.6	21.6	17.8	16.2
	68	20	25.0	25.0	25.0	20.6	18.8
	86	30	25.0	25.0	25.0	20.6	18.8
	104	40	25.0	25.0	25.0	20.6	18.8
	113	45	25.0	25.0	25.0	20.6	18.8
250 (31.5)	50	10	27.2	27.2	27.2	22.4	20.5
	68	20	31.5	31.5	31.5	25.9	23.7
	86	30	31.5	31.5	31.5	25.9	23.7
	104	40	31.5	31.5	31.5	25.9	23.7
	113	45	31.5	31.5	31.5	25.9	23.7

kcal/h = kW x 860, Btu/h = kW x 3,412

X8. Heating capacity with PUMY-P100,125,140YHMB,VHMB

SHC : Sensible Heat Capacity(kW)

Model size (Rated kW)	Outdoor air temp.		Indoor air temp.			
			59 ˚FDB	68 ˚FDB	77 ˚FDB	81 ˚FDB
			15.0˚CDB	20.0˚CDB	25.0˚CDB	27.0˚CDB
	˚FWB	˚CWB	SHC	SHC	SHC	SHC
15 (1.9)	5	-15.0	1.3	1.3	1.2	1.2
	14	-10.0	1.4	1.4	1.3	1.3
	23	-5.0	1.6	1.6	1.5	1.5
	32	0.0	1.8	1.7	1.7	1.7
	37	2.5	1.9	1.8	1.8	1.7
	43	6.0	1.9	1.9	1.9	1.8
	46	7.5	2.1	2.0	1.9	1.8
	50	10.0	2.1	2.1	1.9	1.8
	55	12.5	2.2	2.2	1.9	1.8
	60	15.5	2.3	2.2	1.9	1.8
20 (2.5)	5	-15.0	1.8	1.7	1.6	1.6
	14	-10.0	1.9	1.8	1.8	1.8
	23	-5.0	2.1	2.1	2.0	2.0
	32	0.0	2.4	2.3	2.2	2.2
	37	2.5	2.5	2.4	2.3	2.3
	43	6.0	2.6	2.5	2.5	2.4
	46	7.5	2.7	2.7	2.5	2.4
	50	10.0	2.8	2.8	2.5	2.4
	55	12.5	3.0	2.9	2.5	2.4
	60	15.5	3.0	2.9	2.5	2.4
25 (3.2)	5	-15.0	2.2	2.1	2.1	2.0
	14	-10.0	2.4	2.3	2.3	2.2
	23	-5.0	2.7	2.7	2.5	2.5
	32	0.0	3.0	2.9	2.8	2.8
	37	2.5	3.2	3.1	3.0	2.9
	43	6.0	3.3	3.2	3.2	3.1
	46	7.5	3.5	3.4	3.2	3.1
	50	10.0	3.6	3.5	3.2	3.1
	55	12.5	3.8	3.7	3.2	3.1
	60	15.5	3.9	3.7	3.2	3.1
32 (4.0)	5	-15.0	2.8	2.7	2.6	2.6
	14	-10.0	3.0	2.9	2.8	2.8
	23	-5.0	3.4	3.3	3.2	3.1
	32	0.0	3.8	3.7	3.5	3.5
	37	2.5	4.0	3.8	3.7	3.7
	43	6.0	4.1	4.0	4.0	3.9
	46	7.5	4.3	4.2	4.0	3.9
	50	10.0	4.5	4.4	4.0	3.9
	55	12.5	4.7	4.6	4.0	3.9
	60	15.5	4.8	4.6	4.0	3.9
40 (5.0)	5	-15.0	3.5	3.4	3.3	3.2
	14	-10.0	3.8	3.7	3.6	3.5
	23	-5.0	4.3	4.2	4.0	3.9
	32	0.0	4.7	4.6	4.4	4.4
	37	2.5	5.0	4.8	4.7	4.6
	43	6.0	5.1	5.0	5.0	4.9
	46	7.5	5.4	5.3	5.0	4.9
	50	10.0	5.7	5.5	5.0	4.9
	55	12.5	5.9	5.8	5.0	4.9
	60	15.5	6.1	5.8	5.0	4.9
50 (6.3)	5	-15.0	4.4	4.2	4.1	4.0
	14	-10.0	4.7	4.6	4.5	4.4
	23	-5.0	5.4	5.2	5.0	4.9
	32	0.0	5.9	5.8	5.5	5.5
	37	2.5	6.2	6.0	5.9	5.8
	43	6.0	6.4	6.3	6.2	6.1
	46	7.5	6.8	6.7	6.2	6.1
	50	10.0	7.1	6.9	6.2	6.1
	55	12.5	7.4	7.2	6.2	6.1
	60	15.5	7.6	7.2	6.2	6.1
63 (8.0)	5	-15.0	5.6	5.4	5.2	5.1
	14	-10.0	6.0	5.8	5.7	5.6
	23	-5.0	6.8	6.6	6.3	6.2
	32	0.0	7.5	7.4	7.0	7.0
	37	2.5	7.9	7.7	7.4	7.4
	43	6.0	8.2	8.0	7.9	7.8
	46	7.5	8.6	8.5	7.9	7.8
	50	10.0	9.0	8.8	7.9	7.8
	55	12.5	9.4	9.2	7.9	7.8
	60	15.5	9.7	9.2	7.9	7.8

Model size (Rated kW)	Outdoor air temp.		Indoor air temp.			
			59 ˚FDB	68 ˚FDB	77 ˚FDB	81 ˚FDB
			15.0˚CDB	20.0˚CDB	25.0˚CDB	27.0˚CDB
	˚FWB	˚CWB	SHC	SHC	SHC	SHC
71 (9.0)	5	-15.0	6.3	6.0	5.9	5.8
	14	-10.0	6.8	6.6	6.4	6.3
	23	-5.0	7.7	7.5	7.1	7.0
	32	0.0	8.5	8.3	7.9	7.8
	37	2.5	8.9	8.6	8.4	8.3
	43	6.0	9.2	9.0	8.9	8.7
	46	7.5	9.7	9.5	8.9	8.7
	50	10.0	10.2	9.9	8.9	8.7
	55	12.5	10.6	10.4	8.9	8.7
	60	15.5	10.9	10.4	8.9	8.7
80 (10.0)	5	-15.0	7.0	6.7	6.5	6.4
	14	-10.0	7.5	7.3	7.1	7.0
	23	-5.0	8.5	8.3	7.9	7.8
	32	0.0	9.4	9.2	8.8	8.7
	37	2.5	9.9	9.6	9.3	9.2
	43	6.0	10.2	10.0	9.9	9.7
	46	7.5	10.8	10.6	9.9	9.7
	50	10.0	11.3	11.0	9.9	9.7
	55	12.5	11.8	11.5	9.9	9.7
	60	15.5	12.1	11.5	9.9	9.7
100 (12.5)	5	-15.0	8.8	8.4	8.1	8.0
	14	-10.0	9.4	9.1	8.9	8.8
	23	-5.0	10.6	10.4	9.9	9.8
	32	0.0	11.8	11.5	11.0	10.9
	37	2.5	12.4	12.0	11.6	11.5
	43	6.0	12.8	12.5	12.4	12.1
	46	7.5	13.5	13.3	12.4	12.1
	50	10.0	14.1	13.8	12.4	12.1
	55	12.5	14.8	14.4	12.4	12.1
	60	15.5	15.1	14.4	12.4	12.1
125 (16.0)	5	-15.0	11.2	10.7	10.4	10.2
	14	-10.0	12.0	11.7	11.4	11.2
	23	-5.0	13.6	13.3	12.6	12.5
	32	0.0	15.0	14.7	14.1	13.9
	37	2.5	15.8	15.4	14.9	14.7
	43	6.0	16.3	16.0	15.8	15.5
	46	7.5	17.3	17.0	15.8	15.5
	50	10.0	18.1	17.6	15.8	15.5
	55	12.5	18.9	18.4	15.8	15.5
	60	15.5	19.4	18.4	15.8	15.5
140 (18.0)	5	-15.0	12.6	12.1	11.7	11.5
	14	-10.0	13.5	13.1	12.8	12.6
	23	-5.0	15.3	14.9	14.2	14.0
	32	0.0	16.9	16.6	15.8	15.7
	37	2.5	17.8	17.3	16.7	16.6
	43	6.0	18.4	18.0	17.8	17.5
	46	7.5	19.4	19.1	17.8	17.5
	50	10.0	20.3	19.8	17.8	17.5
	55	12.5	21.2	20.7	17.8	17.5
	60	15.5	21.8	20.7	17.8	17.5

kcal/h = kW x 860, Btu/h = kW x 3,412

CITY MULTI
2. OUTDOOR UNITS / HEAT SOURCE UNITS

GENERAL LINE-UP ..... 2 -2

S SERIES ..... 2 -7

Y SERIES ..... 2 -27

Y (High COP) SERIES ..... 2 -85

HP SERIES ..... 2 -133

R2 SERIES ..... 2 -151

R2 (High COP) SERIES ..... 2 -193

WY SERIES ..... 2 -227

WR2 SERIES ..... 2 -295

Line-up of Outdoor Units of R410A CITY MULTI

Heat Pump S Series

PUMY-P100YHMB PUMY-P100VHMB
PUMY-P125YHMB PUMY-P125VHMB
PUMY-P140YHMB PUMY-P140VHMB

4, 5, 6HP

Heat Pump Y Series

PUHY-P200YHM-A(BS) PUHY-P300YHM-A(BS)
PUHY-P250YHM-A(BS)

8, 10, 12HP

PUHY-P700YSHM-A(BS) PUHY-P850YSHM-A(BS)
PUHY-P750YSHM-A(BS) PUHY-P900YSHM-A(BS)
PUHY-P800YSHM-A(BS)

28, 30, 32, 34, 36HP

PUHY-P350YHM-A(BS) PUHY-P450YHM-A(BS)
PUHY-P400YHM-A(BS)

14, 16, 18HP

PUHY-P950YSHM-A(BS)
PUHY-P1000YSHM-A(BS)

38, 40HP

PUHY-P500YSHM-A(BS)
PUHY-P550YSHM-A(BS)

20, 22HP

PUHY-P1050YSHM-A(BS)

42HP

PUHY-P600YSHM-A(BS)
PUHY-P650YSHM-A(BS)

24, 26HP

PUHY-P1100YSHM-A(BS) PUHY-P1200YSHM-A(BS)
PUHY-P1150YSHM-A(BS) PUHY-P1250YSHM-A(BS)

44, 46, 48, 50HP

Line-up of Outdoor Units of R410A CITY MULTI

Heat Pump Y (High COP) Series

PUHY-EP200YHM-A(BS)

8HP

PUHY-EP550YSHM-A1(BS)
PUHY-EP600YSHM-A(BS)
PUHY-EP650YSHM-A(BS)

22, 24, 26HP

PUHY-EP250YHM-A(BS)
PUHY-EP300YHM-A(BS)

10, 12HP

PUHY-EP700YSHM-A(BS)

28HP

PUHY-EP400YSHM-A(BS)

16HP

PUHY-EP750YSHM-A1(BS)
PUHY-EP800YSHM-A(BS)

30, 32HP

PUHY-EP450YSHM-A1(BS)
PUHY-EP500YSHM-A(BS)

18, 20HP

PUHY-EP850YSHM-A1(BS)
PUHY-EP900YSHM-A(BS)

34, 36HP

Line-up of Outdoor Units of R410A CITY MULTI

Heat Pump HP (ZUBADAN) Series

PUHY-HP200YHM-A(BS)
PUHY-HP250YHM-A(BS)

8, 10HP

PUHY-HP400YSHM-A(BS)
PUHY-HP500YSHM-A(BS)

16, 20HP

Heat Recovery R2 Series

PURY-P200YHM-A(BS) PURY-P300YHM-A(BS)
PURY-P250YHM-A(BS)

8, 10, 12HP

PURY-P650YSHM-A(BS)
PURY-P700YSHM-A(BS)

26, 28HP

PURY-P350YHM-A(BS)
PURY-P400YHM-A(BS)

14, 16HP

PURY-P750YSHM-A(BS)
PURY-P800YSHM-A(BS)

30, 32HP

PURY-P450YSHM-A(BS) PURY-P550YSHM-A(BS)
PURY-P500YSHM-A(BS) PURY-P600YSHM-A(BS)

18, 20, 22, 24HP

Line-up of Outdoor Units / Heat source Units of R410A CITY MULTI

Heat Recovery R2 (High COP) Series

PURY-EP200YHM-A(BS)

8HP

PURY-EP450YSHM-A1(BS)
PURY-EP500YSHM-A(BS)

18, 20HP

PURY-EP250YHM-A(BS)
PURY-EP300YHM-A(BS)

10, 12HP

PURY-EP550YSHM-A1(BS)
PURY-EP600YSHM-A(BS)

22, 24HP

PURY-EP400YSHM-A(BS)

16HP

Heat Pump WY Series

PQHY-P200YHM-A
PQHY-P250YHM-A
PQHY-P300YHM-A

8, 10, 12HP

PQHY-P400YSHM-A PQHY-P550YSHM-A
PQHY-P450YSHM-A PQHY-P600YSHM-A
PQHY-P500YSHM-A

16, 18, 20, 22, 24HP

PQHY-P650YSHM-A PQHY-P800YSHM-A
PQHY-P700YSHM-A PQHY-P850YSHM-A
PQHY-P750YSHM-A PQHY-P900YSHM-A

26, 28, 30, 32, 34, 36HP

Heat Recovery WR2 Series

PQRY-P200YHM-A
PQRY-P250YHM-A
PQRY-P300YHM-A

8, 10, 12HP

PQRY-P400YSHM-A PQRY-P550YSHM-A
PQRY-P450YSHM-A PQRY-P600YSHM-A
PQRY-P500YSHM-A

16, 18, 20, 22, 24HP

OUTDOOR UNITS

1. SPECIFICATIONS ..... 2 - 8
2. EXTERNAL DIMENSIONS ..... 2 - 12
3. CENTER OF GRAVITY ..... 2 - 13
4. ELECTRICAL WIRING DIAGRAMS ..... 2 - 14
5. REFRIGERANT CIRCUIT DIAGRAMS ..... 2 - 16
6. SOUND LEVELS ..... 2 - 17
7. CAPACITY TABLES ..... 2 - 18
   7-1. Correction by temperature ..... 2 - 18
   7-2. Correction by total indoor ..... 2 - 20
   7-3. Correction by refrigerant piping length ..... 2 - 22
   7-4. Correction at frost and defrost ..... 2 - 23
   7-5. Operation temperature range ..... 2 - 23
8. OPTIONAL PARTS ..... 2 - 24
   8-1. JOINT ..... 2 - 24
   8-2. HEADER ..... 2 - 25

S

Model			PUMY-P100YHMB	PUMY-P125YHMB
Power source			3-phase 4-wire 380-400-415V 50Hz	3-phase 4-wire 380-400-415V 50Hz
Cooling capacity (Nominal)	*1	kW	11.2	14.0
	*1	kcal / h	9,600	12,000
	*1	BTU / h	38,200	47,800
	Power input	kW	3.30	4.27
	Current input	A	5.28-5.02-4.84	6.83-6.49-6.26
	COP	kW / kW	3.39	3.28
Temp. range of cooling	Indoor	W.B.	15 to 24degC(59 to 75degF)	15 to 24degC(59 to 75degF)
	Outdoor	D.B.	-5 to 46degC(23 to 115degF) 10 to 46degC(50 to 115degF) : in case of connecting PKFY-P15/P20/P25 type indoor unit.	-5 to 46degC(23 to 115degF) 10 to 46degC(50 to 115degF) : in case of connecting PKFY-P15/P20/P25 type indoor unit.
Heating capacity (Nominal)	*2	kW	12.5	16.0
	*2	kcal / h	10,800	13,800
	*2	BTU / h	42,700	54,600
	Power input	kW	3.63	4.29
	Current input	A	5.81-5.52-5.32	6.87-6.52-6.29
	COP	kW / kW	3.44	3.73
Temp. range of heating	Indoor	D.B.	15 to 27degC(59 to 81degF)	15 to 27degC(59 to 81degF)
	Outdoor	W.B.	-15 to 15degC(5 to 59degF)	-15 to 15degC(5 to 59degF)
Indoor unit connectable	Total capacity		50 to 130 % of outdoor unit capacity	50 to 130 % of outdoor unit capacity
	Model / Quantity		P15 to P125 / 1 to 8	P15 to P140 / 1 to 10
Sound pressure level (measured in anechoic room)		dB <A>	49 / 51	50 / 52
Refrigerant piping diameter	Liquid pipe	mm(in.)	9.52(3/8) Flare	9.52(3/8) Flare
	Gas pipe	mm(in.)	15.88(5/8) Flare	15.88(5/8) Flare
FAN	Type x Quantity		Propeller fan x 2	Propeller fan x 2
	Air flow rate	m^3 / min	100	100
		L/s	1,667	1,667
		cfm	3,532	3,532
	Control, Driving mechanism		DC-control, Direct-driven by motor	DC-control, Direct-driven by motor
	Motor output	kW	0.06 x 2	0.06 x 2
	External static press.		0 Pa (0 mmH_2O)	0 Pa (0 mmH_2O)
Compressor	Type x Quantity		Inverter scroll hermetic compressor	Inverter scroll hermetic compressor
	Manufacture		MITSUBISHI ELECTRIC CORPORATION	MITSUBISHI ELECTRIC CORPORATION
	Starting method		Inverter	Inverter
	Motor output	kW	1.9	2.4
	Case heater	kW	-	-
	Lubricant		FV50S	FV50S
External finish			Galvanized steel sheets <MUNSELL 3Y 7.8/1.1>	Galvanized steel sheets <MUNSELL 3Y 7.8/1.1>
External dimension HxWxD		mm	1,350 x 950 x 330	1,350 x 950 x 330
		in.	53-3/16 x 37-7/16 x 13	53-3/16 x 37-7/16 x 13
Protection devices	High pressure protection		High pressure sensor, High pressure switch at 4.15MPa (601 psi)	High pressure sensor, High pressure switch at 4.15MPa (601 psi)
	Inverter circuit (COMP. / FAN)		Over-heat protection,Over-current protection	Over-heat protection,Over-current protection
	Compressor		Discharge thermo protection,Over-current protection	Discharge thermo protection,Over-current protection
	Fan motor		Over-heat protection,Voltage protection	Over-heat protection,Voltage protection
Refrigerant	Type x original charge		R410A x 8.5kg (19lbs)	R410A x 8.5kg (19lbs)
	Control		LEV circuit	LEV circuit
Net weight		kg(lbs)	142(312)	142(312)
Heat exchanger			Salt-resistant cross fin & copper tube	Salt-resistant cross fin & copper tube
HIC circuit (HIC: Heat Inter-Changer)			-	-
Defrosting method			Auto-defrost mode (Reversed refrigerant cycle)	Auto-defrost mode (Reversed refrigerant cycle)
Drawing	External		YHM-BK01-B328	YHM-BK01-B328
	Wiring		YHM-RG79-V705	YHM-RG79-V705
Standard attachment	Document		Installation Manual	Installation Manual
	Accessory		Grounded lead wire x 2	Grounded lead wire x 2
Optional parts			Joint: CMY-Y62-G-E Header: CMY-Y64/68-G-E	Joint: CMY-Y62-G-E Header: CMY-Y64/68-G-E
Remarks			* Details on foundation work, duct work, insulation work, electrical wiring, power source switch, and other items shall be referred to the Installation Manual. * Due to continuing improvement, above specifications may be subject to change without notice.	

Notes :

*1.Nominal cooling conditions(subject to JIS B8615-1)
Indoor : 27degCDB/19degCWB(81degFDB/66degFWB), Outdoor : 35degCDB(95degFDB)
Pipe length : 7.5m(24-9/16ft.), Level difference : 0m(0ft.)

*2.Nominal heating conditions(subject to JIS B8615-1)
Indoor : 20degCDB(68degFDB), Outdoor : 7degCDB/6degCWB(45degFDB/43degFWB)
Pipe length : 7.5m(24-9/16ft.), Level difference : 0m(0ft.)

Unit converter	
kcal	=kW x 860
BTU/h	=kW x 3,412
cfm	=m^3/min x 35.31
lb	=kg / 0.4536

*Above specification data is subject to rounding variation.

1. SPECIFICATIONS

S

Model			PUMY-P140YHMB	
Power source			3-phase 4-wire 380-400-415V 50Hz	
Cooling capacity (Nominal)	*1	kW	15.5	
	*1	kcal / h	13,300	
	*1	BTU / h	52,900	
	Power input	kW	5.32	
	Current input	A	8.51-8.09-7.80	
	COP	kW / kW	2.91	
Temp. range of cooling	Indoor	W.B.	15 to 24degC(59 to 75degF)	
	Outdoor	D.B.	-5 to 46degC(23 to 115degF) 10 to 46degC(50 to 115degF) : in case of connecting PKFY-P15/P20/P25 type indoor unit.	
Heating capacity (Nominal)	*2	kW	18.0	
	*2	kcal / h	15,500	
	*2	BTU / h	61,400	
	Power input	kW	5.32	
	Current input	A	8.51-8.09-7.80	
	COP	kW / kW	3.38	
Temp. range of heating	Indoor	D.B.	15 to 27degC(59 to 81degF)	
	Outdoor	W.B.	-15 to 15degC(5 to 59degF)	
Indoor unit connectable	Total capacity		50 to 130 % of outdoor unit capacity	
	Model / Quantity		P15 to P140 / 1 to 12	
Sound pressure level (measured in anechoic room)		dB <A>	51 / 53	
Refrigerant piping diameter	Liquid pipe	mm(in.)	9.52(3/8) Flare	
	Gas pipe	mm(in.)	15.88(5/8) Flare	
FAN	Type x Quantity		Propeller fan x 2	
	Air flow rate	m^3 / min	100	
		L/s	1,667	
		cfm	3,532	
	Control, Driving mechanism		DC-control, Direct-driven by motor	
	Motor output	kW	0.06 x 2	
	External static press.		0 Pa (0 mmH_2O)	
Compressor	Type x Quantity		Inverter scroll hermetic compressor	
	Manufacture		MITSUBISHI ELECTRIC CORPORATION	
	Starting method		Inverter	
	Motor output	kW	2.9	
	Case heater	kW	-	
	Lubricant		FV50S	
External finish			Galvanized steel sheets <MUNSELL 3Y 7.8/1.1>	
External dimension HxWxD		mm	1,350 x 950 x 330	
		in.	53-3/16 x 37-7/16 x 13	
Protection devices	High pressure protection		High pressure sensor, High pressure switch at 4.15MPa (601 psi)	
	Inverter circuit (COMP. / FAN)		Over-heat protection,Over-current protection	
	Compressor		Discharge thermo protection,Over-current protection	
	Fan motor		Over-heat protection,Voltage protection	
Refrigerant	Type x original charge		R410A x 8.5kg (19lbs)	
	Control		LEV circuit	
Net weight		kg(lbs)	142(312)	
Heat exchanger			Salt-resistant cross fin & copper tube	
HIC circuit (HIC: Heat Inter-Changer)			-	
Defrosting method			Auto-defrost mode (Reversed refrigerant cycle)	
Drawing	External		YHM-BK01-B328	
	Wiring		YHM-RG79-V705	
Standard attachment	Document		Installation Manual	
	Accessory		Grounded lead wire x 2	
Optional parts			Joint: CMY-Y62-G-E Header: CMY-Y64/68-G-E	
Remarks			* Details on foundation work, duct work, insulation work, electrical wiring, power source switch, and other items shall be referred to the Installation Manual. * Due to continuing improvement, above specifications may be subject to change without notice.	

Notes :

*1.Nominal cooling conditions(subject to JIS B8615-1)

Indoor : 27degCDB/19degCWB(81degFDB/66degFWB), Outdoor : 35degCDB(95degFDB)

Pipe length : 7.5m(24-9/16ft.), Level difference : 0m(0ft.)

*2.Nominal heating conditions(subject to JIS B8615-1)

Indoor : 20degCDB(68degFDB), Outdoor : 7degCDB/6degCWB(45degFDB/43degFWB)

Pipe length : 7.5m(24-9/16ft.), Level difference : 0m(0ft.)

Unit converter

kcal	=kW x 860
BTU/h	=kW x 3,412
cfm	=m^3/min x 35.31
lb	=kg / 0.4536

*Above specification data is subject to rounding variation.

S

Model			PUMY-P100VHMB	PUMY-P125VHMB
Power source			1-phase 220-230-240V 50Hz / 1-phase 220V 60Hz	1-phase 220-230-240V 50Hz / 1-phase 220V 60Hz
Cooling capacity (Nominal)	*1	kW	11.2	14.0
	*1	kcal / h	9,600	12,000
	*1	BTU / h	38,200	47,800
	Power input	kW	3.34	4.32
	Current input	A	15.4-14.8-14.1 / 15.4	20.0-19.1-18.3 / 20.0
	COP	kW / kW	3.35	3.24
Temp. range of cooling	Indoor	W.B.	15 to 24degC(59 to 75degF)	15 to 24degC(59 to 75degF)
	Outdoor	D.B.	-5 to 46degC(23 to 115degF) 10 to 46degC(50 to 115degF) : in case of connecting PKFY-P15/P20/P25 type indoor unit.	-5 to 46degC(23 to 115degF) 10 to 46degC(50 to 115degF) : in case of connecting PKFY-P15/P20/P25 type indoor unit.
Heating capacity (Nominal)	*2	kW	12.5	16.0
	*2	kcal / h	10,800	13,800
	*2	BTU / h	42,700	54,600
	Power input	kW	3.66	4.33
	Current input	A	16.9-16.2-15.5 / 16.9	20.0-19.1-18.3 / 20.0
	COP	kW / kW	3.42	3.69
Temp. range of heating	Indoor	D.B.	15 to 27degC(59 to 81degF)	15 to 27degC(59 to 81degF)
	Outdoor	W.B.	-15 to 15degC(5 to 59degF)	-15 to 15degC(5 to 59degF)
Indoor unit connectable	Total capacity		50 to 130 % of outdoor unit capacity	50 to 130 % of outdoor unit capacity
	Model / Quantity		P15 to P125 / 1 to 8	P15 to P140 / 1 to 10
Sound pressure level (measured in anechoic room)		dB <A>	49 / 51	50 / 52
Refrigerant piping diameter	Liquid pipe	mm(in.)	9.52(3/8)	9.52(3/8)
	Gas pipe	mm(in.)	15.88(5/8)	15.88(5/8)
FAN	Type x Quantity		Propeller fan x 2	Propeller fan x 2
	Air flow rate	m^3 / min	100	100
		L/s	1,667	1,667
		cfm	3,532	3,532
	Control, Driving mechanism		DC-control, Direct-driven by motor	DC-control, Direct-driven by motor
	Motor output	kW	0.06 x 2	0.06 x 2
	External static press.		0 Pa (0 mmH_2O)	0 Pa (0 mmH_2O)
Compressor	Type x Quantity		Inverter scroll hermetic compressor	Inverter scroll hermetic compressor
	Manufacture		MITSUBISHI ELECTRIC CORPORATION	MITSUBISHI ELECTRIC CORPORATION
	Starting method		Inverter	Inverter
	Motor output	kW	2.2	2.9
	Case heater	kW	-	-
	Lubricant		FV50S x 2.3L	FV50S x 2.3L
External finish			Galvanized steel sheets <MUNSELL 3Y 7.8/1.1>	Galvanized steel sheets <MUNSELL 3Y 7.8/1.1>
External dimension HxWxD		mm	1,350 x 950 x 330	1,350 x 950 x 330
		in.	53-3/16 x 37-7/16 x 13	53-3/16 x 37-7/16 x 13
Protection devices	High pressure protection		High pressure sensor, High pressure switch at 4.15MPa (601 psi)	High pressure sensor, High pressure switch at 4.15MPa (601 psi)
	Inverter circuit (COMP. / FAN)		Over-heat protection,Over-current protection	Over-heat protection,Over-current protection
	Compressor		Discharge thermo protection,Over-current protection	Discharge thermo protection,Over-current protection
	Fan motor		Over-heat protection,Voltage protection	Over-heat protection,Voltage protection
Refrigerant	Type x original charge		R410A x 8.5kg (19lbs)	R410A x 8.5kg (19lbs)
	Control		LEV circuit	LEV circuit
Net weight		kg(lbs)	129(284)	129(284)
Heat exchanger			Salt-resistant cross fin & copper tube	Salt-resistant cross fin & copper tube
HIC circuit (HIC: Heat Inter-Changer)			-	-
Defrosting method			Auto-defrost mode (Reversed refrigerant cycle)	Auto-defrost mode (Reversed refrigerant cycle)
Drawing	External		VHM-BK01-B434	VHM-BK01-B434
	Wiring		VHM-RG79-V708	VHM-RG79-V708
Standard attachment	Document		Installation Manual	Installation Manual
	Accessory		Grounded lead wire x 2	Grounded lead wire x 2
Optional parts			Joint: CMY-Y62-G-E Header: CMY-Y64/68-G-E	Joint: CMY-Y62-G-E Header: CMY-Y64/68-G-E
Remarks			* In case of connecting Fresh air intake type indoor unit PEFY-P-VHM-E-F, only one indoor unit can be connected with one PUMY. * Details on foundation work, duct work, insulation work, electrical wiring, power source switch, and other items shall be referred to the Installation Manual. * Due to continuing improvement, above specifications may be subject to change without notice.	

Notes :

*1.Nominal cooling conditions(subject to JIS B8615-1)

Indoor : 27degCDB/19degCWB(81degFDB/66degFWB), Outdoor : 35degCDB(95degFDB)

Pipe length : 7.5m(24-9/16ft.), Level difference : 0m(0ft.)

*2.Nominal heating conditions(subject to JIS B8615-1)

Indoor : 20degCDB(68degFDB), Outdoor : 7degCDB/6degCWB(45degFDB/43degFWB)

Pipe length : 7.5m(24-9/16ft.), Level difference : 0m(0ft.)

Unit converter	
kcal	=kW x 860
BTU/h	=kW x 3,412
cfm	=m^3/min x 35.31
lb	=kg / 0.4536

*Above specification data is subject to rounding variation.

Model			PUMY-P140VHMB	
Power source			1-phase 220-230-240V 50Hz / 1-phase 220V 60Hz	
Cooling capacity (Nominal)	*1	kW	15.5	
	*1	kcal / h	13,300	
	*1	BTU / h	52,900	
	Power input	kW	5.35	
	Current input	A	24.7-23.6-22.7 / 24.7	
	COP	kW / kW	2.9	
Temp. range of cooling	Indoor	W.B.	15 to 24degC(59 to 75degF)	
	Outdoor	D.B.	-5 to 46degC(23 to 115degF) 10 to 46degC(50 to 115degF) : in case of connecting PKFY-P15/P20/P25 type indoor unit.	
Heating capacity (Nominal)	*2	kW	18.0	
	*2	kcal / h	15,500	
	*2	BTU / h	61,400	
	Power input	kW	5.58	
	Current input	A	25.8-24.7-23.6 / 25.8	
	COP	kW / kW	3.23	
Temp. range of heating	Indoor	D.B.	15 to 27degC(59 to 81degF)	
	Outdoor	W.B.	-15 to 15degC(5 to 59degF)	
Indoor unit connectable	Total capacity		50 to 130 % of outdoor unit capacity	
	Model / Quantity		P15 to P140 / 1 to 12	
Sound pressure level (measured in anechoic room)		dB <A>	51 / 53	
Refrigerant piping diameter	Liquid pipe	mm(in.)	9.52(3/8)	
	Gas pipe	mm(in.)	15.88(5/8)	
FAN	Type x Quantity		Propeller fan x 2	
	Air flow rate	m^3 / min	100	
		L/s	1,667	
		cfm	3,532	
	Control, Driving mechanism		DC-control, Direct-driven by motor	
	Motor output	kW	0.06 x 2	
	External static press.		0 Pa (0 mmH_2O)	
Compressor	Type x Quantity		Inverter scroll hermetic compressor	
	Manufacture		MITSUBISHI ELECTRIC CORPORATION	
	Starting method		Inverter	
	Motor output	kW	3.3	
	Case heater	kW	-	
	Lubricant		FV50S x 2.3L	
External finish			Galvanized steel sheets <MUNSELL 3Y 7.8/1.1>	
External dimension HxWxD		mm	1,350 x 950 x 330	
		in.	53-3/16 x 37-7/16 x 13	
Protection devices	High pressure protection		High pressure sensor, High pressure switch at 4.15MPa (601 psi)	
	Inverter circuit (COMP. / FAN)		Over-heat protection,Over-current protection	
	Compressor		Discharge thermo protection,Over-current protection	
	Fan motor		Over-heat protection,Voltage protection	
Refrigerant	Type x original charge		R410A x 8.5kg (19lbs)	
	Control		LEV circuit	
Net weight		kg(lbs)	129(284)	
Heat exchanger			Salt-resistant cross fin & copper tube	
HIC circuit (HIC: Heat Inter-Changer)			-	
Defrosting method			Auto-defrost mode (Reversed refrigerant cycle)	
Drawing	External		VHM-BK01-B434	
	Wiring		VHM-RG79-V708	
Standard attachment	Document		Installation Manual	
	Accessory		Grounded lead wire x 2	
Optional parts			Joint: CMY-Y62-G-E Header: CMY-Y64/68-G-E	
Remarks			* In case of connecting Fresh air intake type indoor unit PEFY-P-VHM-E-F, only one indoor unit can be connected with one PUMY. * Details on foundation work, duct work, insulation work, electrical wiring, power source switch, and other items shall be referred to the Installation Manual. * Due to continuing improvement, above specifications may be subject to change without notice.	

Notes :

*1.Nominal cooling conditions(subject to JIS B8615-1)

Indoor : 27degCDB/19degCWB(81degFDB/66degFWB), Outdoor : 35degCDB(95degFDB)

Pipe length : 7.5m(24-9/16ft.), Level difference : 0m(0ft.)

*2.Nominal heating conditions(subject to JIS B8615-1)

Indoor : 20degCDB(68degFDB), Outdoor : 7degCDB/6degCWB(45degFDB/43degFWB)

Pipe length : 7.5m(24-9/16ft.), Level difference : 0m(0ft.)

Unit converter

kcal	=kW x 860
BTU/h	=kW x 3,412
cfm	=m^3/min x 35.31
lb	=kg / 0.4536

*Above specification data is subject to rounding variation.

S

PUMY-P100,125,140YHMB
PUMY-P100,125,140VHMB

Unit : mm

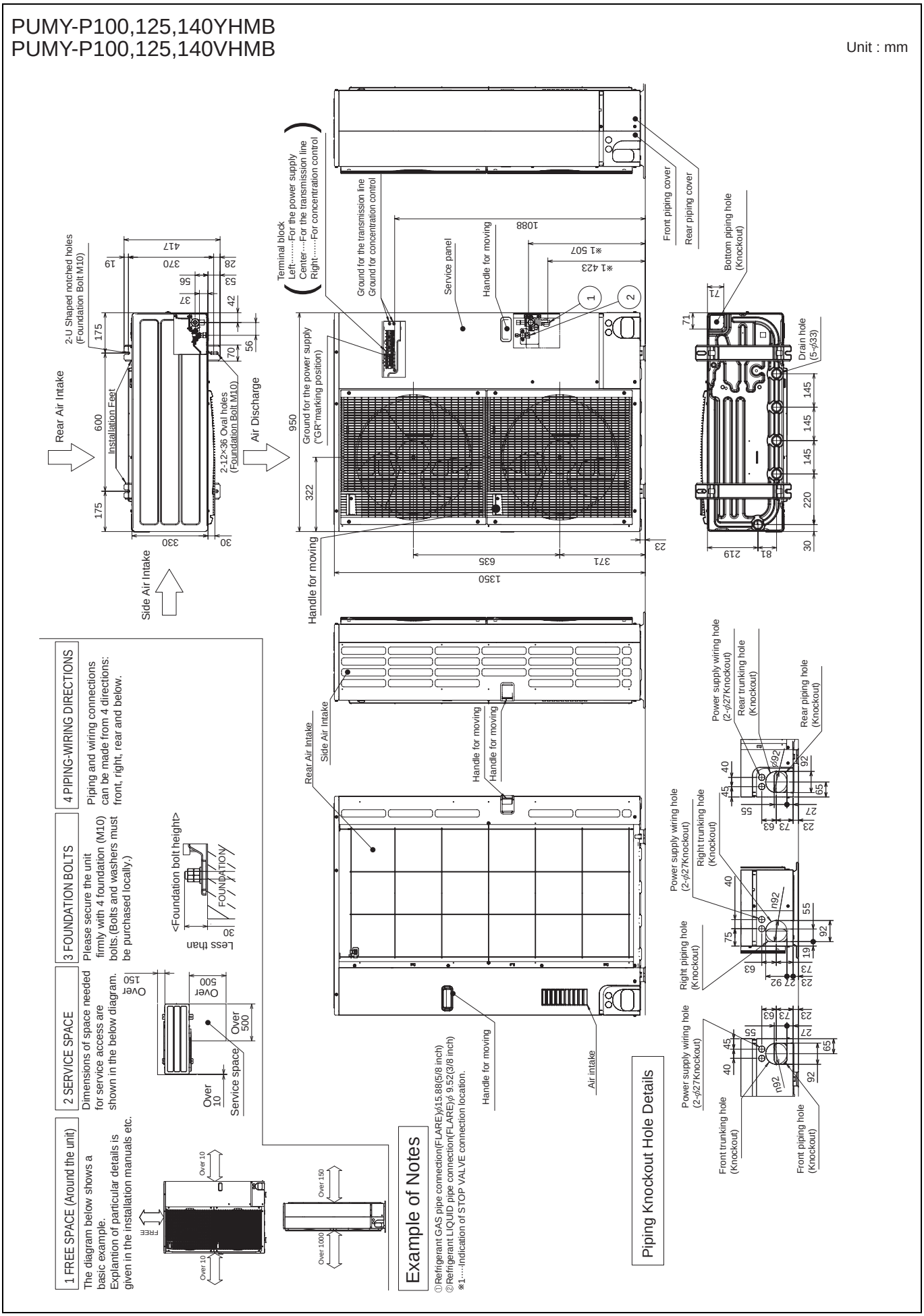

3. CENTER OF GRAVITY

S

PUMY-P100,125,140YHMB
PUMY-P100,125,140VHMB

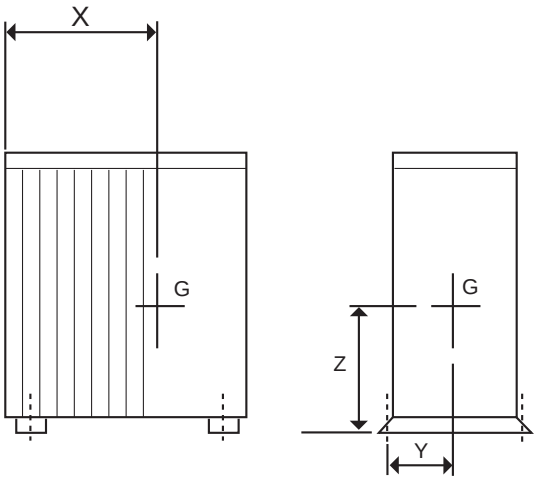

Model	W	D	H	X	Y	Z
PUMY-P100VHMB-E PUMY-P125VHMB-E PUMY-P140VHMB-E PUMY-P100YHMB-E PUMY-P125YHMB-E PUMY-P140YHMB-E	950	330	1350	620	185	500

S

PUMY-P100,125,140YHMB

SYMBOL	NAME
TB1	Terminal Block <Power Supply>
TB3	Terminal Block <Comunication Line>
TB7	Terminal Block <Centralized Control Line>
MC	Motor For Compressor
MF1,MF2	Fan Motor
21S4	Solenoid Valve<Four-Way Valve>
63H	High Pressure Switch
63L	Low Pressure Switch
63HS	High Pressure Sensor
SV1	Solenoid Valve<Bypass Valve>
TH3	Thermistor<Outdoor Pipe>
TH4	Thermistor<Discharge>
TH6	Thermistor<Low Pressure Saturated>
TH7	Thermistor<Outdoor>
RS	Rush Current Protect Resistor
ACL1~ACL4	Reactor
CB1,CB2	Main Smoothing Capacitor
CK	Capacitor
P.B.	Power Circuit Board
TB-U/V/W	Connection Terminal<U/V/W-Phase>
TB-L1/L2/L3	Connection Terminal<L1/L2/L3-Power Supply>
TB-P2	Connection Terminal
TB-C1	Connection Terminal
TB-N1	Connection Terminal
X52A	Relay
N.F.	Noise Filter Circuit Board
LO1/LO2/LO3/NO	Connection Terminal<L1/L2/L3-Power Supply>
LI1/LI2/LI3/NI	Connection Terminal<L1/L2/L3-Power Supply>
GD1,GD3	Connection Terminal<Ground>
CONV.B.	Converter Circuit Board
L1-A1/IN	Connection Terminal<L1-Power Supply>
L1-A2/OU	Connection Terminal<L1-Power Supply>
L2-A2/OU	Connection Terminal<L2-Power Supply>
L3-A2/OU	Connection Terminal<L3-Power Supply>
N-IN	Connection Terminal
CK-OU	Connection Terminal
C.B.	Controller Circuit Board
SW1	Switch<Display Selection>
SW2	Switch<Function Selection>
SW3	Switch<Test Run>
SW4	Switch<Model Selection>
SW5	Switch<Function Selection>
SW6	Switch<Function Selection>
SW7	Switch<Function Selection>
SW8	Switch<Function Selection>
SWU1	Switch<Unit Address Selection, 1s digit>
SWU2	Switch<Unit Address Selection, 10ths digit>
SS	Connector<Connection For Option>
CN3D	Connector<Connection For Option>
CN3S	Connector<Connection For Option>
CN3N	Connector<Connection For Option>
CN51	Connector<Connection For Option>
LED1,LED2	LED<Operation Inspection Display>
LED3	LED<Power Supply to Main Microcomputer>
F1,F2	Fuse<T6.3AL250V>
X501~X505	Relay
M-NET P.B.	M-NET Power Circuit Board
TP1	Connection Terminal<Ground>

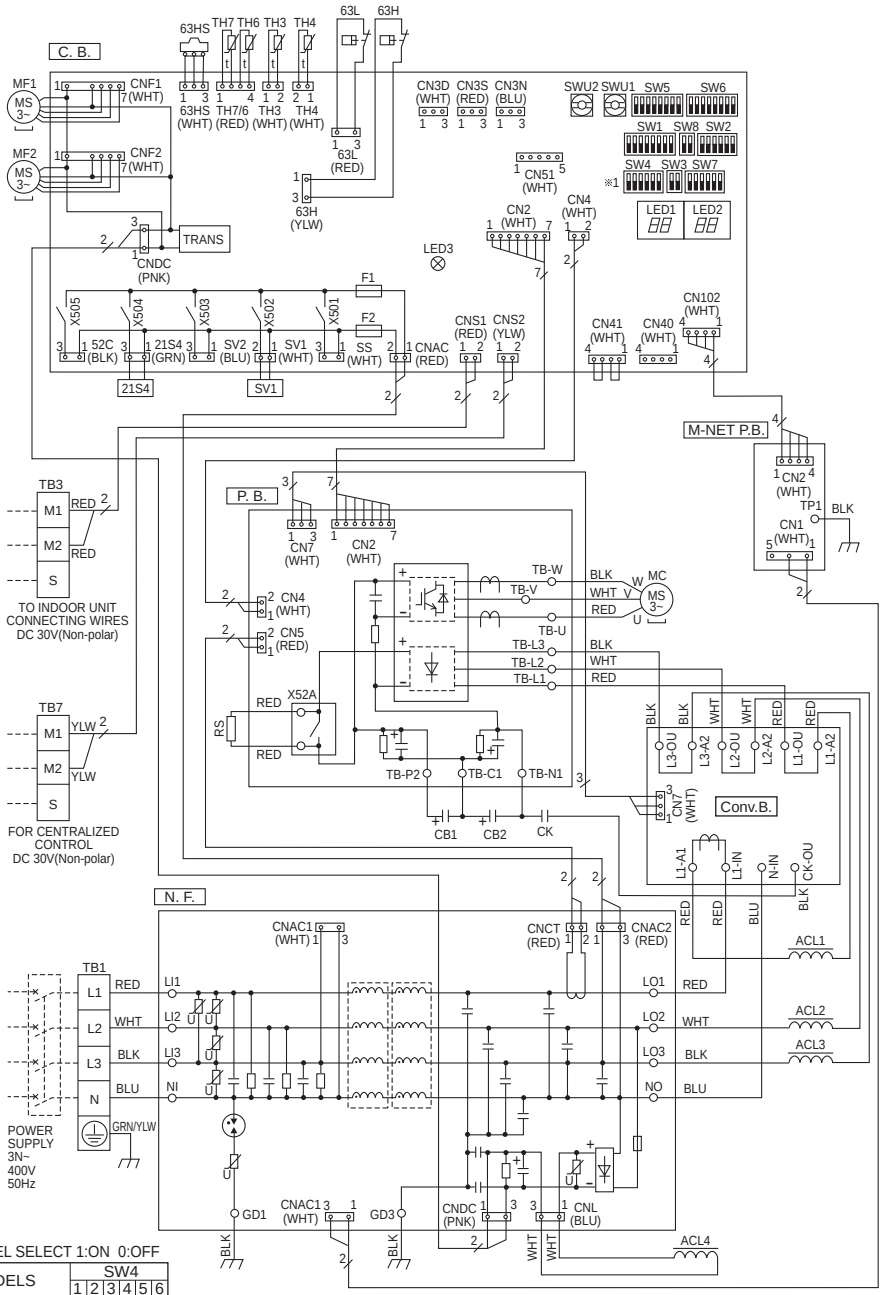

※1 MODEL SELECT 1:ON 0:OFF

MODELS	SW4					
	1	2	3	4	5	6
PUMY-P100YHMB	1	1	0	0	1	0
PUMY-P125YHMB	1	1	0	0	0	1
PUMY-P140YHMB	1	1	0	0	1	1

Cautions when Servicing

- ⚠ WARNING: When the main supply is turned off, the voltage [570 V] in the main capacitor will drop to 20 V in approx. 5 minutes (input voltage: 400 V). When servicing, make sure that LED1 and LED2 on the outdoor circuit board goes out, and then wait for at least 5 minute.
- Components other than the outdoor board may be faulty: Check and take corrective action, referring to the service manual. Do not replace the outdoor board without checking.

NOTES:

1.Refer to the wiring diagrams of the indoor units for details on wiring of each indoor unit.
Self-diagnosis function
The indoor and outdoor units can be diagnosed automatically using the self-diagnosis switch (SW1), LED1 and LED2 (LED indication) found on the multi-controller of the outdoor unit.
LED indication : Set all contacts of SW1 to OFF.
- During normal operation
The LED indicates the drive state of the controller in the outdoor unit.

Bit	1	2	3	4	5	6	7	8
Indication	Compressor operated	52C	21S4	SV1	(SV2)	—	—	Always lit

[Example]
When the compressor and SV1 are turned on during cooling operation.

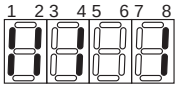

- When fault requiring inspection has occurred,
the LED alternately indicates the inspection code and the location of the unit in which the fault has occurred.

S

PUMY-P100,125,140VHMB

SYMBOL	NAME
TB1	Terminal Block <Power Supply>
TB3	Terminal Block <Comunication Line>
TB7	Terminal Block <Centralized Control Line>
MC	Motor For Compressor
MF1,MF2	Fan Motor
21S4	Solenoid Valve<Four-Way Valve>
63H	High Pressure Switch
63L	Low Pressure Switch
63HS	High Pressure Sensor
SV1	Solenoid Valve<Bypass valve>
TH3	Thermistor<Outdoor Pipe>
TH4	Thermistor<Discharge>
TH6	Thermistor<Low Pressure Saturated>
TH7	Thermistor<Outdoor>
TH8	Thermistor<Heatsink>
DCL	Reactor
ACTM	Active Filter Module
CE	Main Smoothing Capacitor
P.B.	Power Circuit Board
TABU/V/W	Connection Terminal<U/V/W-Phase>
TABS/T	Connection Terminal<L/N-Phase>
TABP1/P2/P	Connection Terminal<DC Voltage>
TABN1/N2/N	Connection Terminal<DC Voltage>
DS2,DS3	Diode Bridge
IPM	Power Module
N.F.	Noise Filter Circuit Board
LI/LO	Connection Terminal<L-Phase>
NI/NO	Connection Terminal<N-Phase>
EI,E2	Connection Terminal<Ground>
52C	52C Relay
C.B.	Controller Circuit Board
SW1	Switch<Display Selection>
SW2	Switch<Function Selection>
SW3	Switch<Test Run>
SW4	Switch<Model Selection>
SW5	Switch<Function Selection>
SW6	Switch<Function Selection>
SW7	Switch<Function Selection>
SW8	Switch<Function Selection>
SWU1	Switch<Unit Address Selection, 1s digit>
SWU2	Switch<Unit Address Selection, 10ths digit>
CNLVB	Connector<To N.F. Board CN52C> (Symbol of Board is CNLVB)
SS	Connector<Connection For Option>
CN3D	Connector<Connection For Option>
CN3S	Connector<Connection For Option>
CN3N	Connector<Connection For Option>
CN51	Connector<Connection For Option>
LED1,LED2	LED<Operation Inspection Display>
LED3	LED<Power Supply to Main Microcomputer>
F1,F2	Fuse<T6,3AL250V>
X501~505	Relay
M-NET P.B.	M-NET Power Circuit Board
TP1	ConnectionTerminal<Ground>

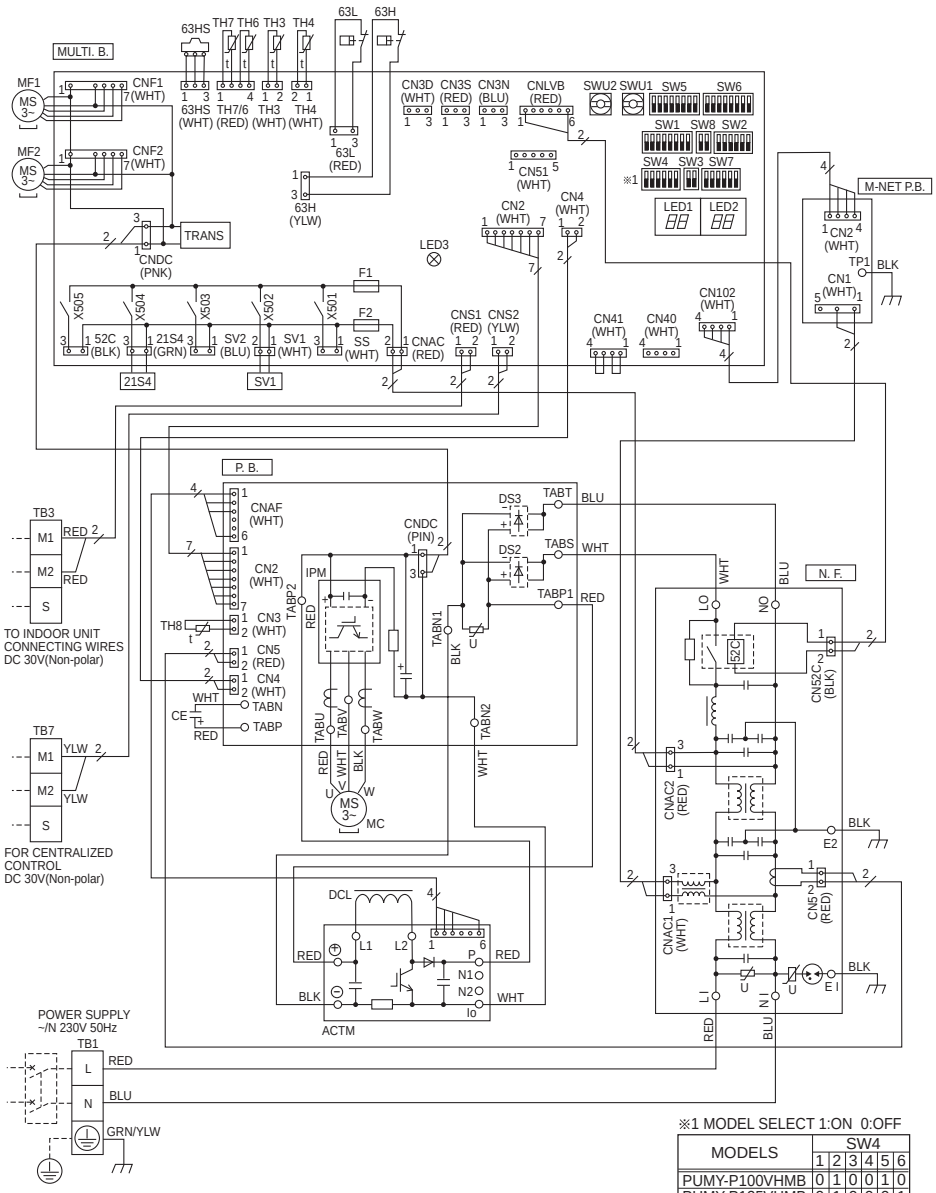

※1 MODEL SELECT 1:ON 0:OFF

MODELS	SW4					
	1	2	3	4	5	6
PUMY-P100VHMB	0	1	0	0	1	0
PUMY-P125VHMB	0	1	0	0	0	1
PUMY-P140VHMB	0	1	0	0	1	1

Cautions when Servicing

⚠ WARNING: When the main supply is turned off, the voltage [340 V] in the main capacitor will drop to 20 V in approx. 2 minutes (input voltage: 240 V).
When servicing, make sure that LED1, LED2 on the outdoor circuit board goes out, and then wait for at least 1 minute.
Components other than the outdoor board may be faulty: Check and take corrective action, referring to the service manual.
Do not replace the outdoor board without checking.

NOTES:

1.Refer to the wiring diagrams of the indoor units for details on wiring of each indoor unit.
Self-diagnosis function
The indoor and outdoor units can be diagnosed automatically using the self-diagnosis switch (SW1) and LED1, LED2 (LED indication) found on the multi-controller of the outdoor unit.
LED indication : Set all contacts of SW1 to OFF.

· During normal operation
The LED indicates the drive state of the controller in the outdoor unit.

Bit	1	2	3	4	5	6	7	8
Indication	Compressor operated	52C	21S4	SV1	(SV2)	—	—	Always lit

When fault requiring inspection has occurred
The LED alternately indicates the inspection code and the location of the unit in which the fault has occurred.

[Example]
When the compressor and SV1 are turned on during cooling operation.

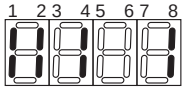

S

PUMY-P100,125,140YHMB
PUMY-P100,125,140VHMB

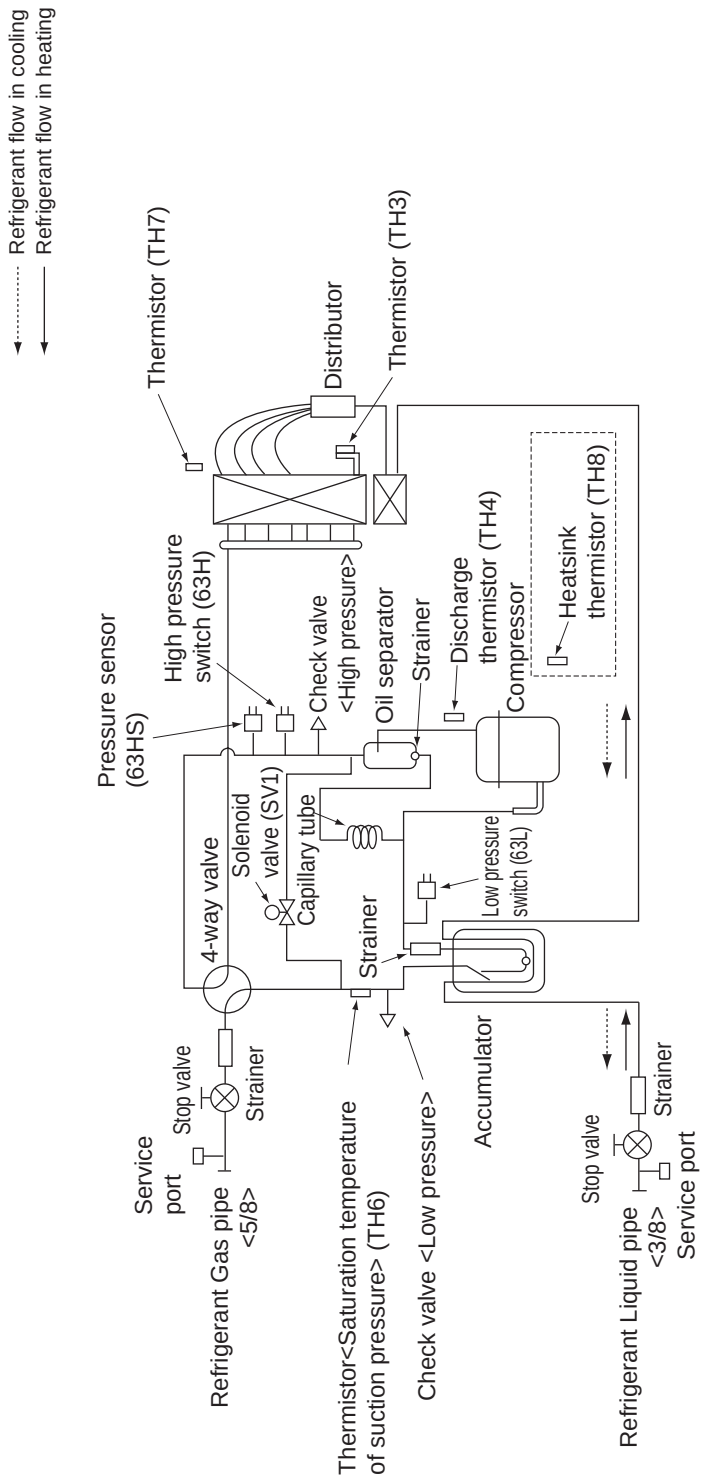

Refrigerant pipng specifications <dimensions of flared connector>

Capacity \ Item		Liquid piping	Gas pipng
Indoor unit	P20, P25, P32, P40, P50	ø 6.35 <1/4">Flare	ø 12.7 <1/2">Flare
	P63, P80, P100 P125, P140	ø 9.52 <3/8">Flare	ø 15.88 <5/8">Flare
Outdoor unit	P100, P125, P140	ø 9.52 <3/8">Flare	ø 15.88 <5/8">Flare

6. SOUND LEVELS

S

Measurement condition
PUMY-P100,125,140YHMB
PUMY-P100,125,140VHMB

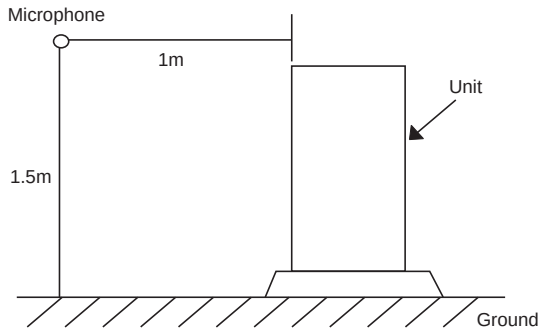

Sound level of PUMY-P140YHMB,VHMB

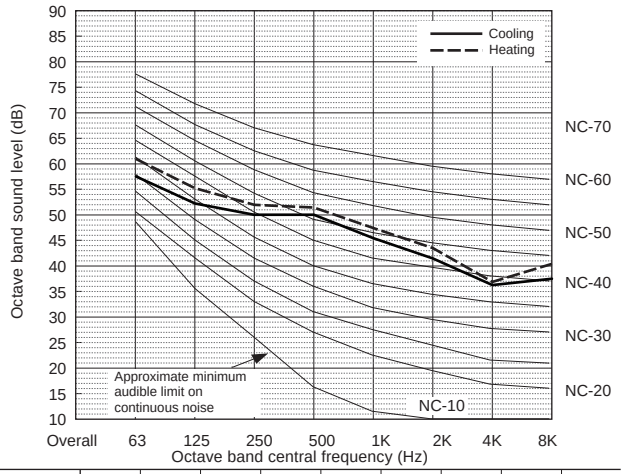

	63Hz	125Hz	250Hz	500Hz	1000Hz	2000Hz	4000Hz	8000Hz	dB(A)
Cooling	57.2	51.7	49.9	49.8	45.5	41.1	35.9	37.1	51.0
Heating	60.9	55.4	52.1	51.4	47.5	43.2	37.1	40.3	53.0
Low Noise Mode 50/60Hz	-	-	-	-	-	-	-	-	-

* When Low Noise Mode is set, the A/C system's capacity is limited. The system could return to normal operation from Low Noise Mode automatically in the case that the operation condition is severe.

Sound level of PUMY-P100YHMB,VHMB

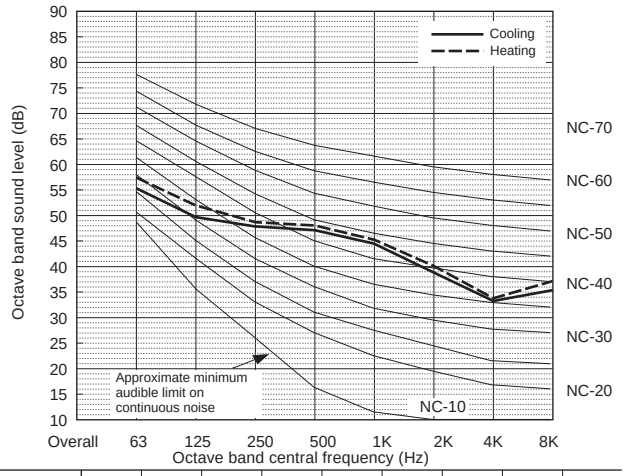

	63Hz	125Hz	250Hz	500Hz	1000Hz	2000Hz	4000Hz	8000Hz	dB(A)
Cooling	55.2	49.7	47.9	47.8	43.5	39.1	33.9	35.1	49.0
Heating	58.9	53.4	50.1	49.4	45.5	41.2	35.1	38.3	51.0
Low Noise Mode 50/60Hz	-	-	-	-	-	-	-	-	-

* When Low Noise Mode is set, the A/C system's capacity is limited. The system could return to normal operation from Low Noise Mode automatically in the case that the operation condition is severe.

Sound level of PUMY-P125YHMB,VHMB

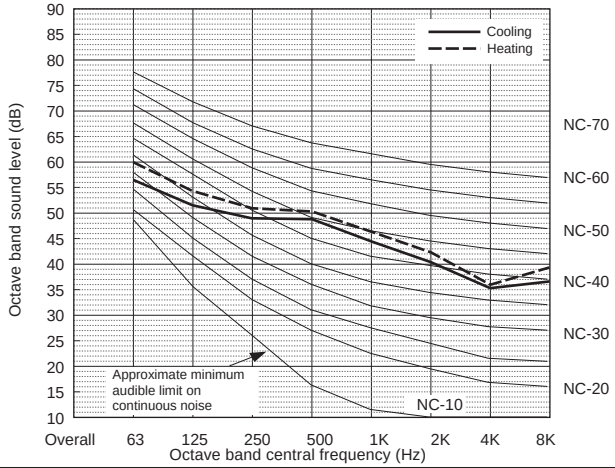

	63Hz	125Hz	250Hz	500Hz	1000Hz	2000Hz	4000Hz	8000Hz	dB(A)
Cooling	56.2	50.7	48.9	48.8	44.5	40.1	34.9	36.1	50.0
Heating	59.9	54.4	51.1	50.4	46.5	42.2	36.1	39.3	52.0
Low Noise Mode 50/60Hz	-	-	-	-	-	-	-	-	-

* When Low Noise Mode is set, the A/C system's capacity is limited. The system could return to normal operation from Low Noise Mode automatically in the case that the operation condition is severe.

S

7-1. Correction by temperature

CITY MULTI could have various capacities at different designing temperatures. Using the nominal cooling/heating capacity values and the ratios below, the capacity can be found for various temperatures.

PUMY-		P100YHMB	P125YHMB
Nominal Cooling Capacity	kW	11.2	14.0
	kcal/h	9,600	12,000
	Btu/h	38,200	47,800
Input	kW	3.30	4.27

PUMY-		P140YHMB
Nominal Cooling Capacity	kW	15.5
	kcal/h	13,300
	Btu/h	52,900
Input	kW	5.32

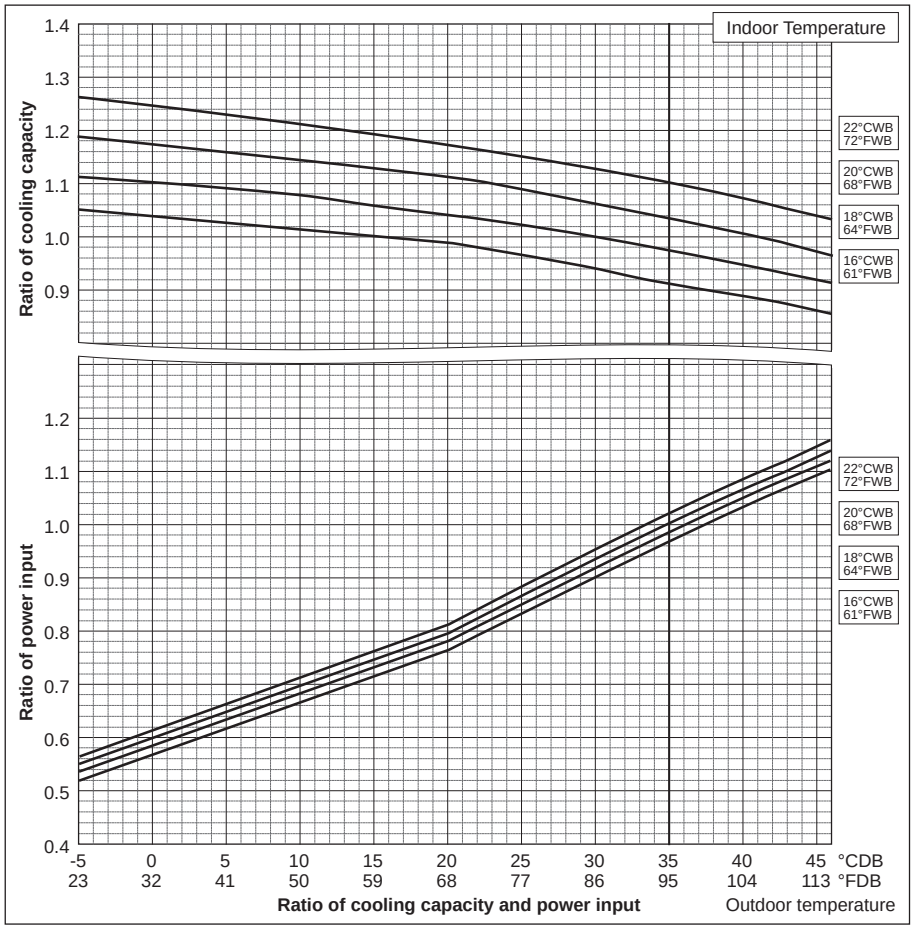

PUMY-		P100YHMB	P125YHMB
Nominal Heating Capacity	kW	12.5	16.0
	kcal/h	10,800	13,800
	Btu/h	42,700	54,600
Input	kW	3.63	4.29

PUMY-		P140YHMB
Nominal Heating Capacity	kW	18.0
	kcal/h	15,500
	Btu/h	61,400
Input	kW	5.32

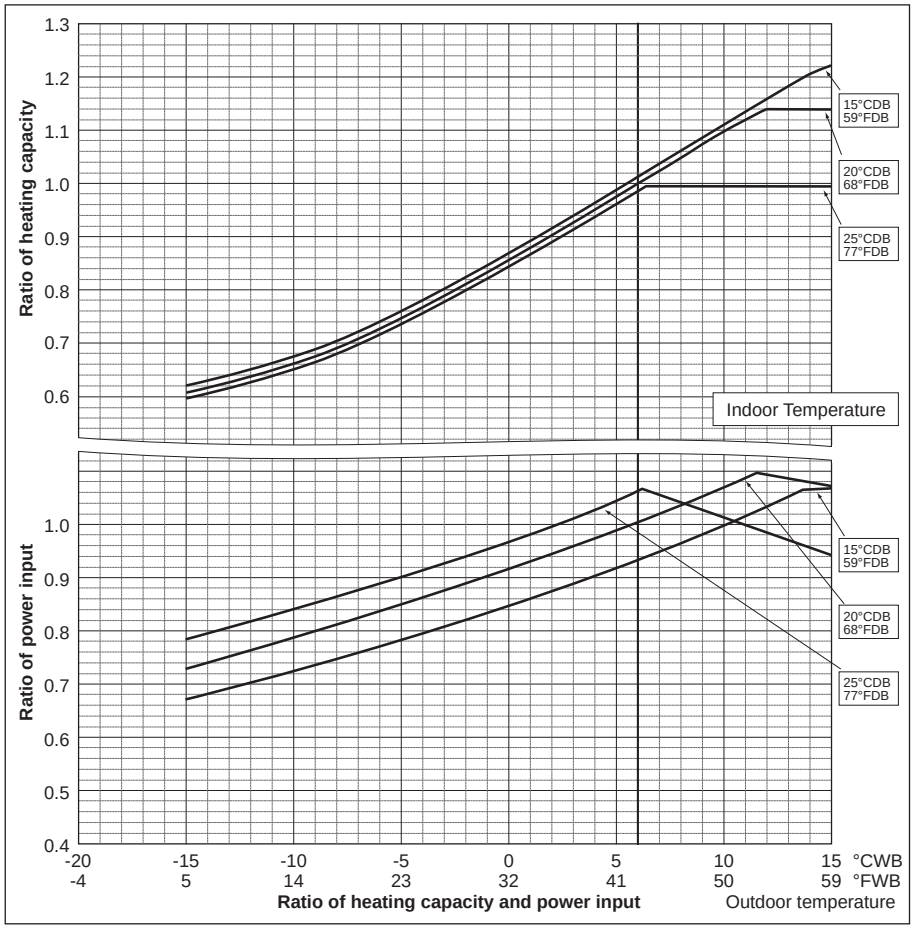

7. CAPACITY TABLES

PUMY-		P100VHMB	P125VHMB
Nominal Cooling Capacity	kW	11.2	14.0
	kcal/h	9,600	12,000
	Btu/h	38,200	47,800
Input	kW	3.34	4.32

PUMY-		P140VHMB
Nominal Cooling Capacity	kW	15.5
	kcal/h	13,300
	Btu/h	52,900
Input	kW	5.35

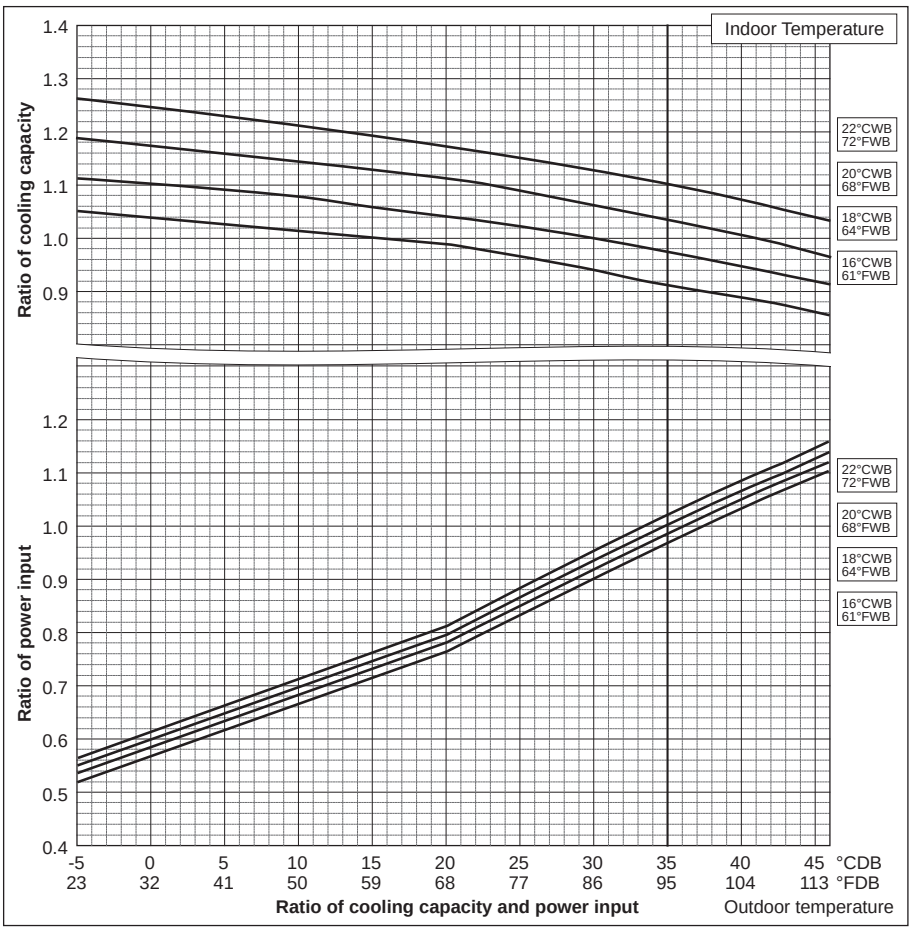

PUMY-		P100VHMB	P125VHMB
Nominal Heating Capacity	kW	12.5	16.0
	kcal/h	10,800	13,800
	Btu/h	42,700	54,600
Input	kW	3.66	4.33

PUMY-		P140VHMB
Nominal Heating Capacity	kW	18.0
	kcal/h	15,500
	Btu/h	61,400
Input	kW	5.58

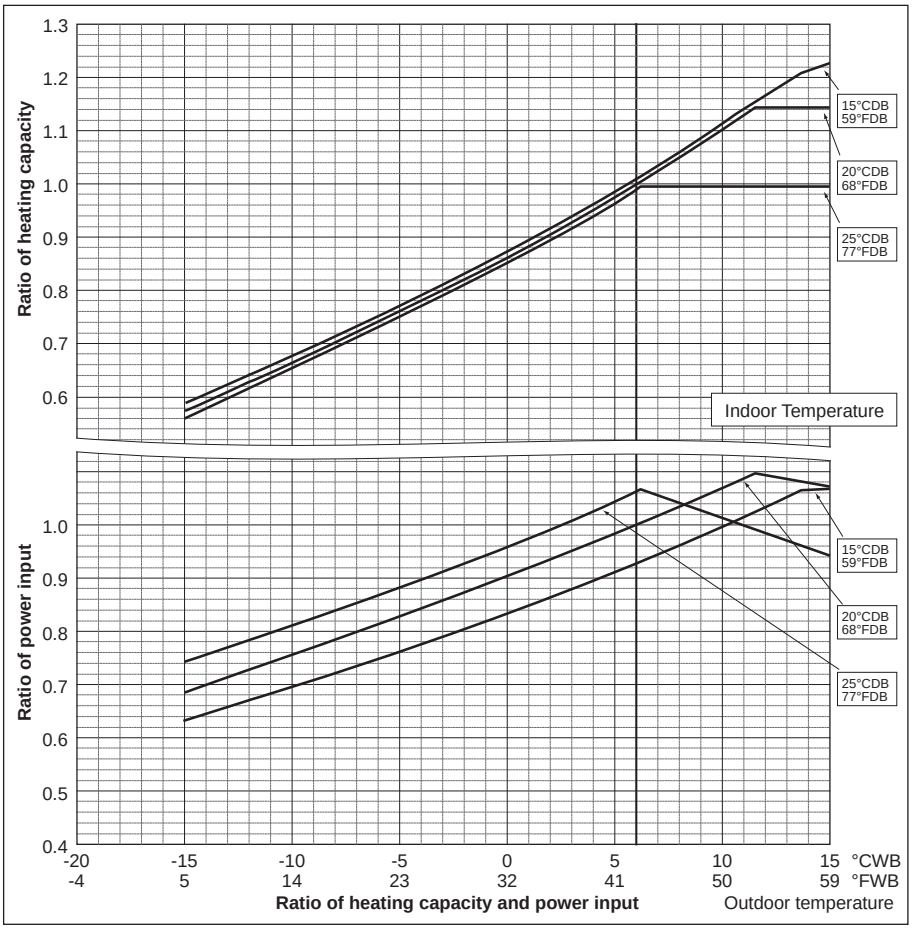

S

7-2. Correction by total indoor

CITY MULTI system have different capacities and inputs when many combinations of indoor units with different total capacities are connected. Using following tables, the maximum capacity can be found to ensure the system is installed with enough capacity for a particular application.

PUMY-P100,125YHMB

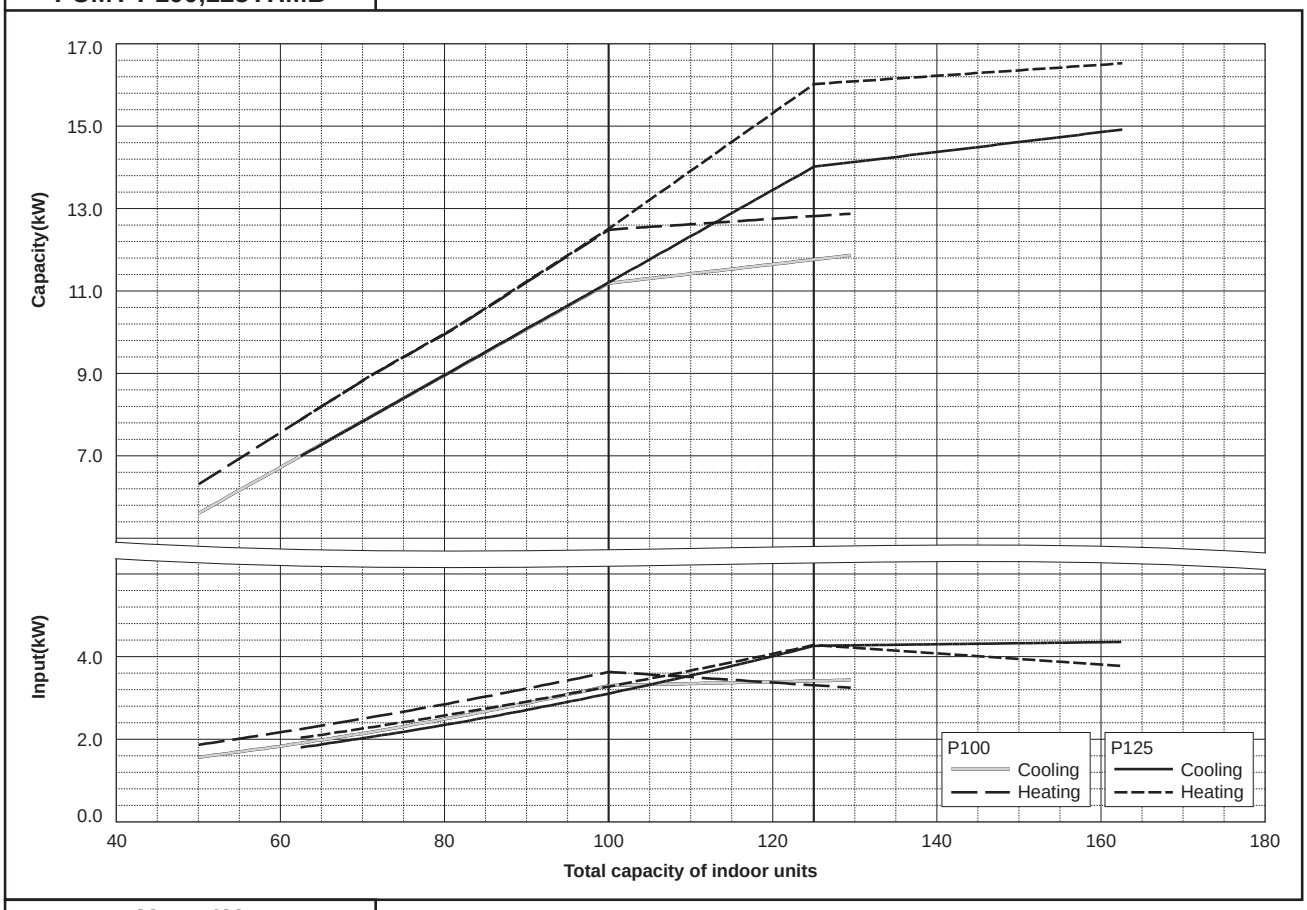

PUMY-P140YHMB

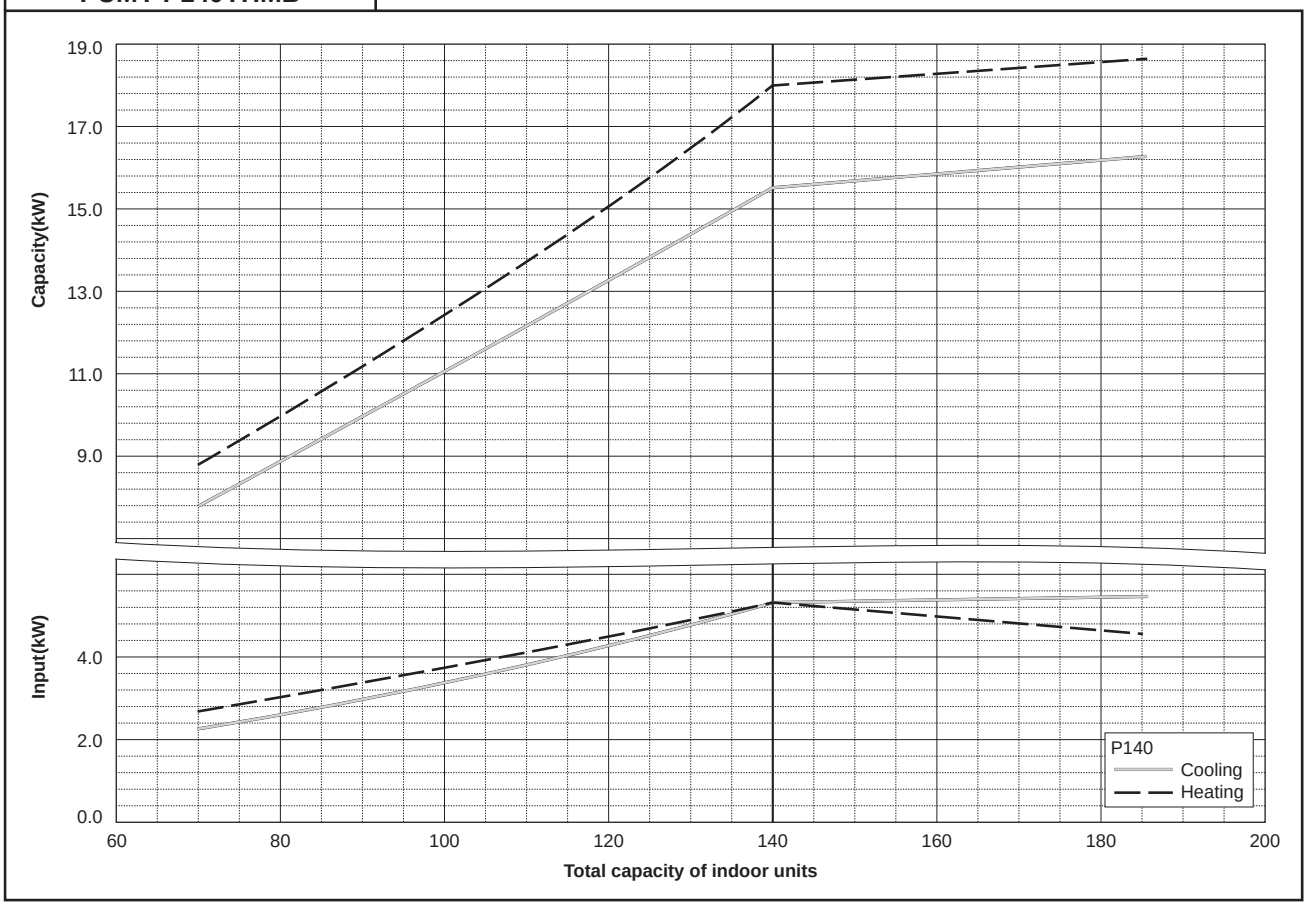

S

PUMY-P100,125VHMB

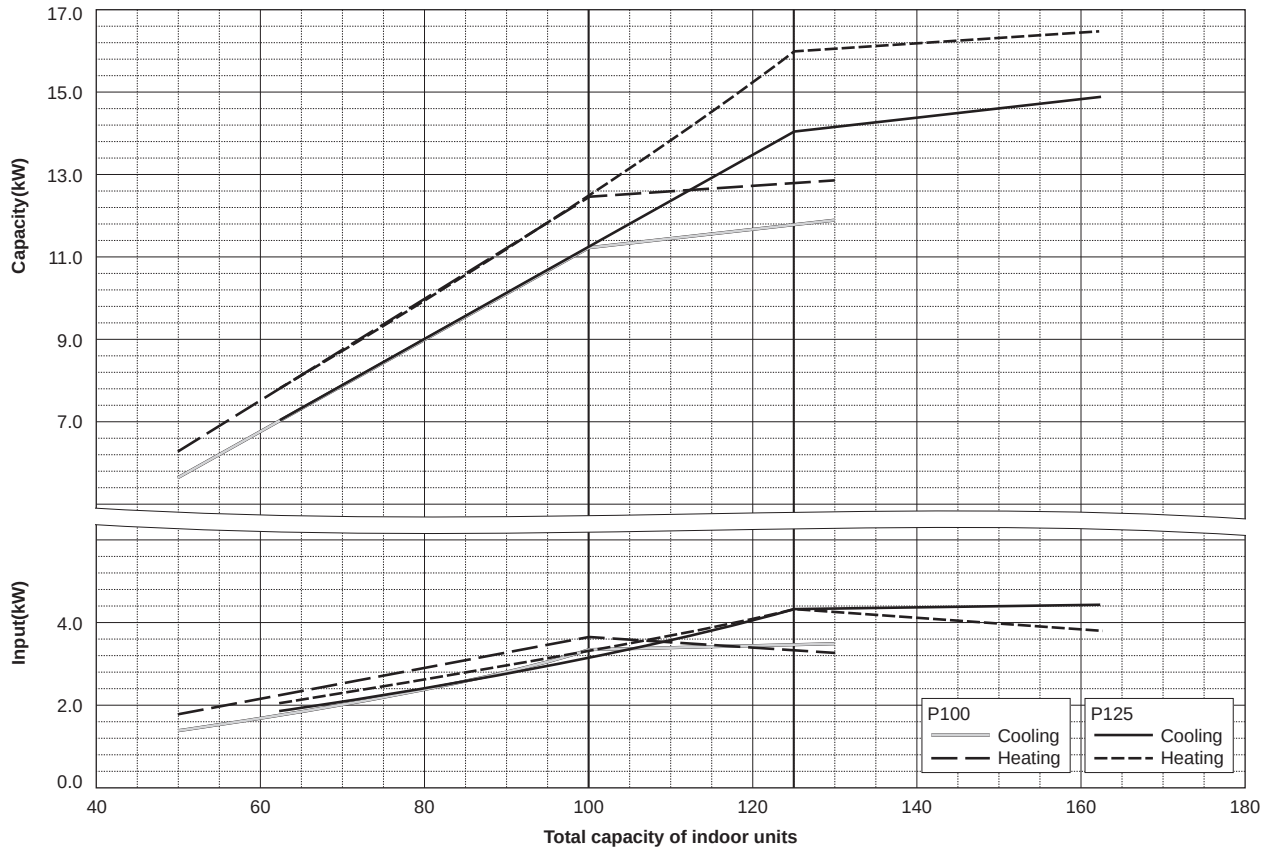

PUMY-P140VHMB

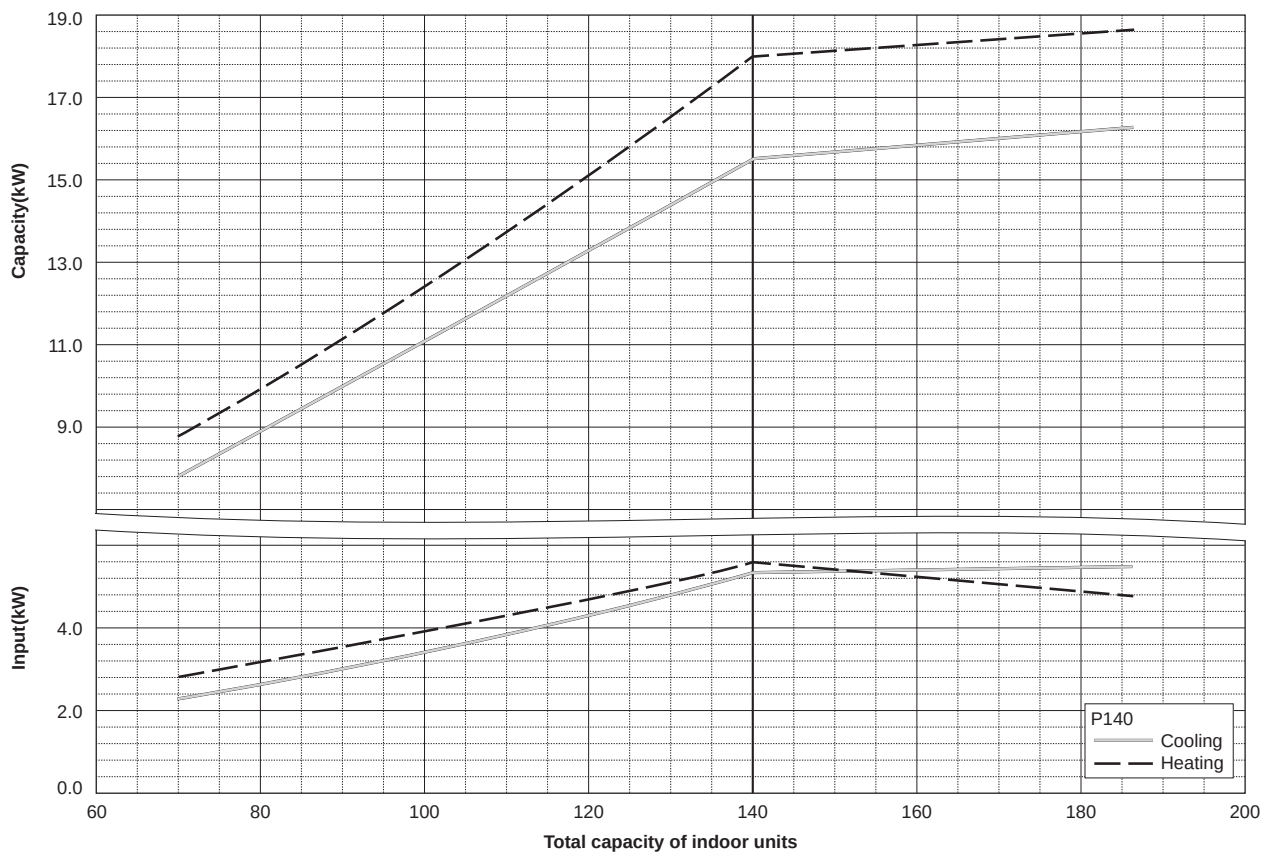

S

7-3. Correction by refrigerant piping length

CITY MULTI systems can have extended piping lengths if certain limitations are followed, but cooling/heating capacity could be reduced. Using following correction factor by equivalent piping length shown at 7-3-1 and 7-3-2, capacity can be found. 7-3-3 shows how to obtain the equivalent piping length.

7-3-1. Cooling capacity correction

PUMY-P100YHMB,VHMB

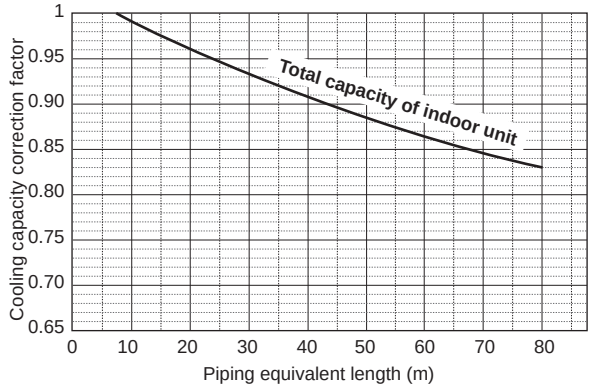

PUMY-P140YHMB,VHMB

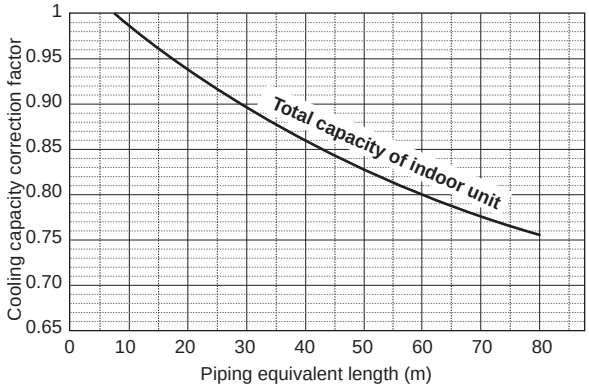

PUMY-P125YHMB,VHMB

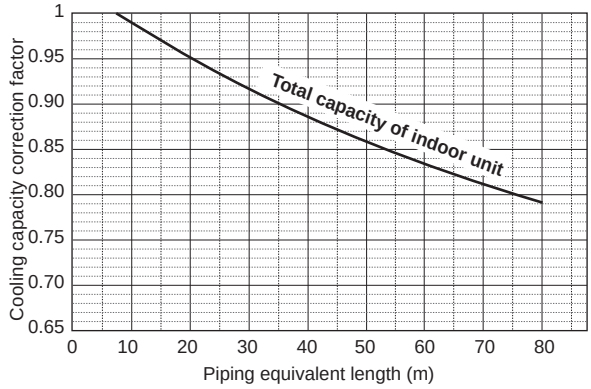

7-3-2. Heating capacity correction

PUMY-P100,125,140YHMB,VHMB

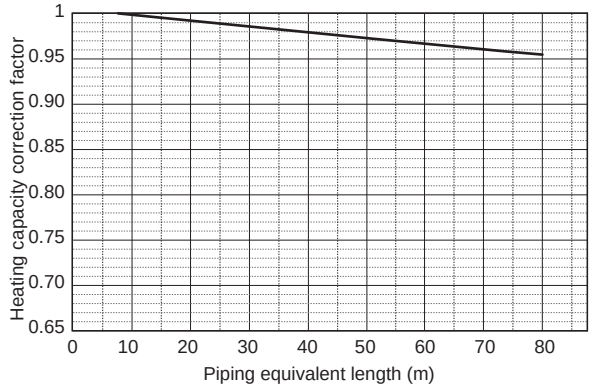

7-3-3. How to obtain the equivalent piping length

1. PUMY-P100, 125, 140YHMB, VHMB

Equivalent length = (Actual piping length to the farthest indoor unit) + (0.30 x number of bends on the piping) m

7-4. Correction at frost and defrost

Due to frost at the outdoor heat exchanger and the automatical defrosting operation, the heating capacity of the outdoor unit should be considered by multiplying the correction factor which shown in the table below.

Table of correction factor at frosting and defrosting

Outdoor inlet air temp. °C	6	4	2	1	0	-2	-4	-6	-8	-10	-20
Outdoor inlet air temp. °F	43	39	36	34	32	28	25	21	18	14	-4
PUMY-P100, 125, 140YHMB	1.0	0.98	0.855	0.85	0.845	0.89	0.90	0.95	0.95	0.95	-
PUMY-P100, 125, 140VHMB	1.0	0.98	0.855	0.85	0.845	0.89	0.90	0.95	0.95	0.95	-

7-5. Operation temperature range

• Cooling

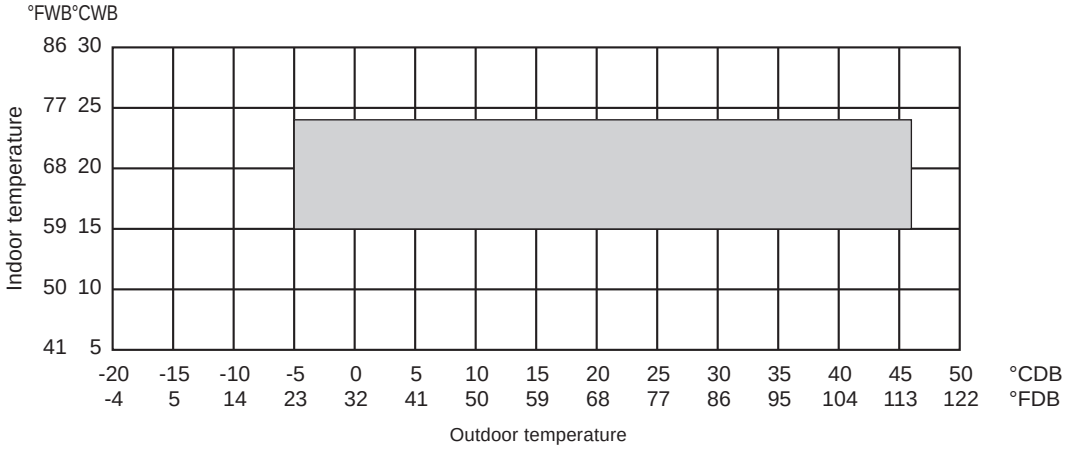

* 10 to 40°CDB (50 to 115°FDB): in case of connecting PKFY-P15/P20/P25 type indoor unit.

• Heating

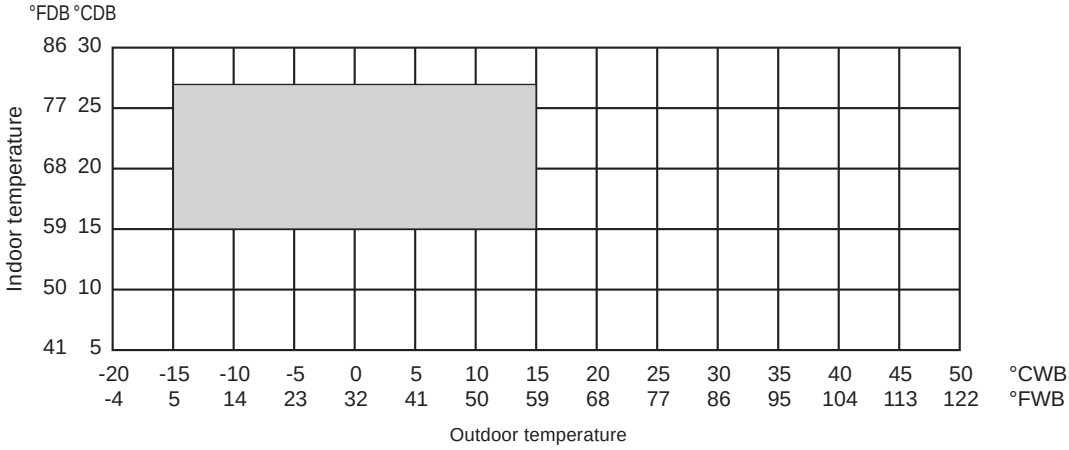

S

8-1. JOINT

CITY MULTI piping can be easily installed with joints and headers provided by MITSUBISHI ELECTRIC CORP..
There is one set of piping joints. Details for installing the joint sets are found in System Design 3, or their own Installation Manual.

CMY-Y62-G-E

mm

1. Specification

Items		Details
Main	Number of ports	2 ports
	Number of branch joints	One for each liquid and gas pipe
	Pipe material	Phosphorus deoxidized copper C1220T-OL (JIS H3300)
Accessory	Insulation material	Foamed polyethylene (one for each liquid and gas pipe)
	Reducer	10 reducers of 7 types (Refer to the external drawing for details.)

2. External drawing

For liquid pipe:

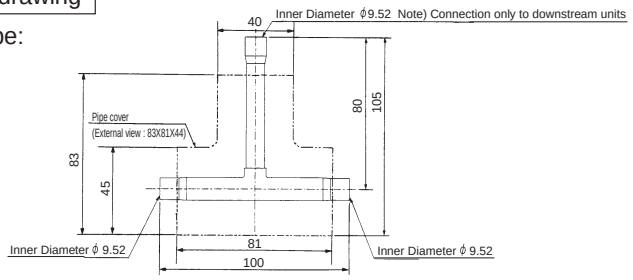

Reducer (Accessory):

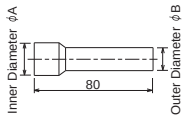

A (Inner Diameter)	B (Outer Diameter)	Number of reducers
ϕ 12.7	ϕ 9.52	2
ϕ 19.05	ϕ 15.88	1
ϕ 22.22	ϕ 19.05	1

For gas pipe:

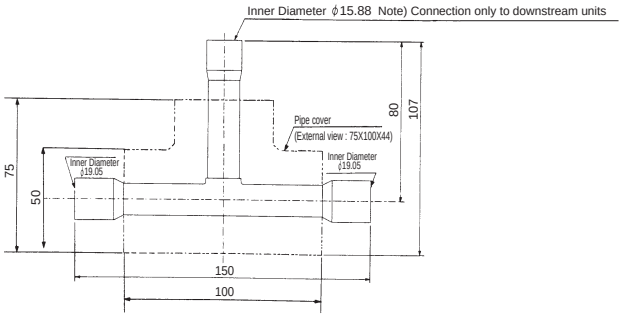

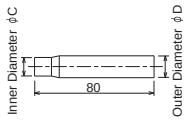

C (Inner Diameter)	D (Outer Diameter)	Number of reducers
ϕ 6.35	ϕ 9.52	2
ϕ 12.7	ϕ 15.88	1
ϕ 12.7	ϕ 19.05	1
ϕ 15.88	ϕ 19.05	2

8-2. HEADER

CITY MULTI piping can be easily installed with joints and headers provided by MITSUBISHI ELECTRIC CORP..
There are two sets of headers for piping. Details for installing the header sets are found in System Design 3, or their own Installation Manual.

CMY-Y64-G-E

mm

1. Specification

Items		Details
Main	Number of ports	3 ~ 4 ports
	Number of branch joints	One for each liquid and gas pipe
	Pipe material	Phosphorus deoxidized copper C1220T-OL (JIS H3300)
Accessory	Insulation material	Foamed polyethylene
	Reducer	7 reducers of 5 types
	Cap	2 caps of 2 different types for each liquid and gas pipe 4 caps in total

2. External drawing

For liquid pipe:

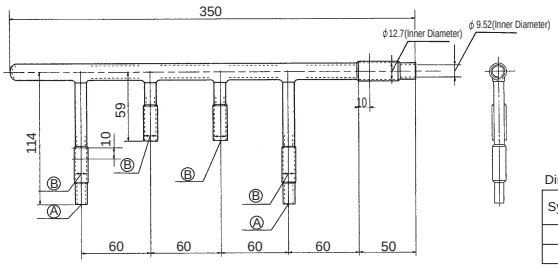

Dimension table

Symbol	Inner Diameter (mm)
Ⓐ	ϕ 6.35
Ⓑ	ϕ 9.52

Reducer (Accessory):

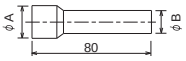

A (Inner Diameter)	B (Outer Diameter)	Number of reducers
ϕ 19.05	ϕ 15.88	1
ϕ 15.88	ϕ 12.7	2
ϕ 9.52	ϕ 6.35	2

For gas pipe:

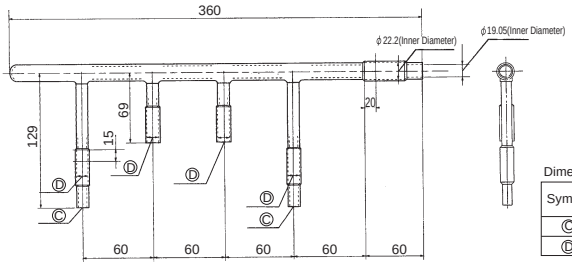

Dimension table

Symbol	Inner Diameter (mm)
Ⓒ	ϕ 12.7
Ⓓ	ϕ 15.88

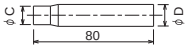

C (Inner Diameter)	D (Outer Diameter)	Number of reducers
ϕ 15.88	ϕ 19.05	1
ϕ 9.52	ϕ 12.7	1

CMY-Y68-G-E

mm

1. Specification

Items		Details
Main	Number of ports	5 ~ 8 ports
	Number of branch joints	One for each liquid and gas pipe
	Pipe material	Phosphorus deoxidized copper C1220T-OL (JIS H3300)
Accessory	Insulation material	Foamed polyethylene
	Reducer	3 reducers of 3 types
	Cap	3 caps for each liquid and gas pipe 6 in total

2. External drawing

For liquid pipe:

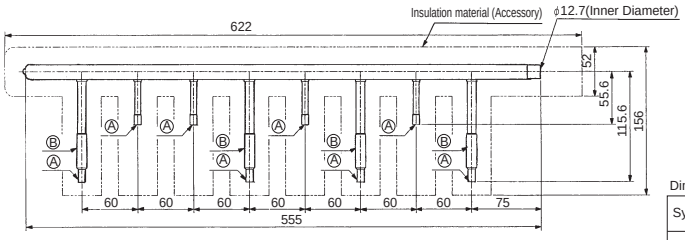

Dimension table

Symbol	Inner Diameter (mm)
Ⓐ	ϕ 6.35
Ⓑ	ϕ 9.52

Reducer (Accessory):

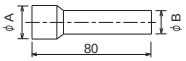

A (Inner Diameter)	B (Outer Diameter)	Number of reducers
ϕ 19.05	ϕ 15.88	1
ϕ 12.7	ϕ 9.52	1

For gas pipe:

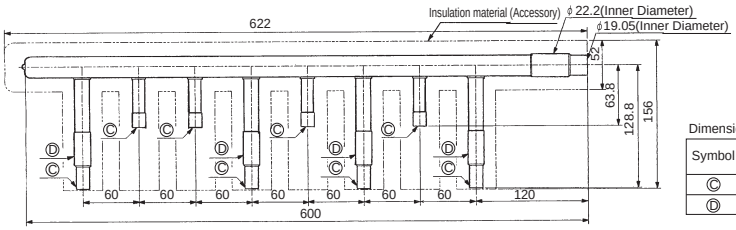

Dimension table

Symbol	Inner Diameter (mm)
Ⓒ	ϕ 12.7
Ⓓ	ϕ 15.88

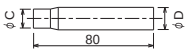

C (Inner Diameter)	D (Outer Diameter)	Number of reducers
ϕ 15.88	ϕ 19.05	1

OUTDOOR UNITS

1. SPECIFICATIONS ..... 2 - 28
2. EXTERNAL DIMENSIONS ..... 2 - 47
3. CENTER OF GRAVITY ..... 2 - 57
4. ELECTRICAL WIRING DIAGRAMS ..... 2 - 58
5. SOUND LEVELS ..... 2 - 59
6. CAPACITY TABLES ..... 2 - 65
   6-1. Correction by temperature ..... 2 - 65
   6-2. Correction by total indoor ..... 2 - 70
   6-3. Correction by refrigerant piping length ..... 2 - 76
   6-4. Correction at frost and defrost ..... 2 - 80
   6-5. Operation temperature range ..... 2 - 81
7. OPTIONAL PARTS ..... 2 - 82
   7-1. JOINT ..... 2 - 82
   7-2. HEADER ..... 2 - 83
   7-3. OUTDOOR TWINNING KIT ..... 2 - 84

Y

Model			PUHY-P200YHM-A(-BS)	PUHY-P250YHM-A(-BS)
Power source			3-phase 4-wire 380-400-415V 50/60Hz	3-phase 4-wire 380-400-415V 50/60Hz
Cooling capacity (Nominal)	*1	kW	22.4	28.0
	*1	kcal / h	19,300	24,100
	*1	Btu / h	76,400	95,500
	*2	kcal / h	20,000	25,000
	Power input	kW	5.72	7.73
	Current input	A	9.6-9.1-8.8	13.0-12.3-11.9
	COP (kW / kW)		3.91	3.62
Temp. range of cooling	Indoor	W.B.	15 to 24degC (59 to 75degF)	15 to 24degC (59 to 75degF)
	Outdoor	D.B.	- 5 to 43degC (23 to 109degF)	- 5 to 43degC (23 to 109degF)
Heating capacity (Nominal)	*3	kW	25.0	31.5
	*3	kcal / h	21,500	27,100
	*3	Btu / h	85,300	107,500
	Power input	kW	6.03	7.83
	Current input	A	10.1-9.6-9.3	13.2-12.5-12.1
	COP (kW / kW)		4.14	4.02
Temp. range of heating	Indoor temp.	D.B.	15 to 27degC (59 to 81degF)	15 to 27degC (59 to 81degF)
	Outdoor temp.	W.B.	-20 to 15.5degC (-4 to 60degF)	-20 to 15.5degC (-4 to 60degF)
Indoor unit connectable	Total capacity		50 - 130% of outdoor unit capacity	50 - 130% of outdoor unit capacity
	Model / Quantity		P15 - P250/1 - 17	P15 - P250/1 - 21
Sound pressure level (measured in anechoic room)		dB <A>	56	57
Diameter of refrigerant pipe (O.D.)	Liquid	mm (in.)	9.52 (3/8) Brazed	9.52 (3/8) Brazed (12.7 (1/2) Brazed,total length>=90m)
	Gas	mm (in.)	19.05 (3/4) Brazed	22.2 (7/8) Brazed

External finish			Pre-coated galvanized steel sheets (+powder coating for -BS type)	Pre-coated galvanized steel sheets (+powder coating for -BS type)
			<MUNSELL 5Y 8/1 or similar>	<MUNSELL 5Y 8/1 or similar>
External dimension H x W x D		mm	1,710(without legs 1,650)x920x760	1,710(without legs 1,650)x920x760
		in.	67-3/8(without legs 65)x36-1/4x29-15/16	67-3/8(without legs 65)x36-1/4x29-15/16
Net weight		kg (lb)	185 (408)	200 (441)
Heat exchanger			Salt-resistant cross fin & copper tube	Salt-resistant cross fin & copper tube
Compressor	Type		Inverter scroll hermetic compressor	Inverter scroll hermetic compressor
	Manufacture		MITSUBISHI ELECTRIC CORPORATION	MITSUBISHI ELECTRIC CORPORATION
	Starting method		Inverter	Inverter
	Motor output	kW	5.4	6.7
	Case heater	kW	0.035	0.035
	Lubricant		MEL32	MEL32
FAN	Air flow rate	m^3 / min	185	185
		L / s	3,083	3,083
		cfm	6,532	6,532
	External static press.	*4	0 Pa (0mmH_2O)	0 Pa (0mmH_2O)
	Type x Quantity		Propeller fan x 1	Propeller fan x 1
	Control, Driving mechanism		Inverter-control, Direct-driven by motor	Inverter-control, Direct-driven by motor
	Motor output	kW	0.46 x 1	0.46 x 1
HIC circuit (HIC: Heat Inter-Changer)			Copper pipe, tube-in-tube structure	Copper pipe, tube-in-tube structure
Protection	High pressure protection		High pres. Sensor & High pres. Switch at 4.15 MPa (601psi)	High pres. Sensor & High pres. Switch at 4.15 MPa (601psi)
	Inverter circuit (COMP. / FAN)		Over-heat protection, Over-current protection	Over-heat protection, Over-current protection
	Compressor		Over-heat protection	Over-heat protection
	Fan motor		Thermal switch	Thermal switch
Defrosting method			Auto-defrost mode (Reversed refrigerant circle)	Auto-defrost mode (Reversed refrigerant circle)
Refrigerant	Type x original charge		R410A x 6.5 kg (15lb)	R410A x 9.0 kg (20lb)
	Control		LEV and HIC circuit	LEV and HIC circuit
Drawing	External		KB94G531	KB94G531
	Wiring		KE94C140	KE94C140
Standard attachment	Document		Installation Manual	Installation Manual
	Accessory		Refrigerant conn. pipe	Refrigerant conn. pipe
Optional parts			joint :CMY-Y102S-G2 Header :CMY-Y104/108/1010-G	joint :CMY-Y102S/L-G2 Header :CMY-Y104/108/1010-G
Remarks			*Details on foundation work, duct work, insulation work, electrical wiring, power source switch, and other items shall be referred to the Installation Manual. *Due to continuing improvement, above specifications may be subject to change without notice.	

Notes :	*1 Nominal cooling conditions	*2 Nominal cooling conditions	*3 Nominal heating conditions	Unit converter
Indoor :	27degCDB/19degCWB (81degFDB/66degFWB)	27degCDB/19.5degCWB (81degFDB/67degFWB)	20degCDB(68degFDB)	kcal = kW x 860
Outdoor :	35degCDB(95degFDB)	35degCDB(95degFDB)	7degCDB/6degCWB (45degFDB/43degFWB)	Btu/h = kW x 3,412
Pipe length :	7.5m(24-9/16ft)	5m(16-3/8ft)	7.5m(24-9/16ft)	cfm = m^3/min x 35.31
Level difference :	0m(0ft)	0m(0ft)	0m(0ft)	lb = kg/0.4536
*Nominal condition *1,*3 are subject to JIS B8615-1				*Above specification data is subject to rounding variation.
*4 External static pressure option is available (30Pa, 60Pa/3.1mmH_2O, 6.1mmH_2O)				

1. SPECIFICATIONS

Model			PUHY-P300YHM-A(-BS)	PUHY-P350YHM-A(-BS)
Power source			3-phase 4-wire 380-400-415V 50/60Hz	3-phase 4-wire 380-400-415V 50/60Hz
Cooling capacity (Nominal)	*1	kW	33.5	40.0
	*1	kcal / h	28,800	34,400
	*1	Btu / h	114,300	136,500
	*2	kcal / h	30,000	35,000
	Power input	kW	9.07	11.20
	Current input	A	15.3-14.5-14.0	18.9-17.9-17.3
	COP (kW / kW)		3.69	3.57
Temp. range of cooling	Indoor	W.B.	15 to 24degC (59 to 75degF)	15 to 24degC (59 to 75degF)
	Outdoor	D.B.	- 5 to 43degC (23 to 109degF)	- 5 to 43degC (23 to 109degF)
Heating capacity (Nominal)	*3	kW	37.5	45.0
	*3	kcal / h	32,300	38,700
	*3	Btu / h	128,000	153,500
	Power input	kW	9.39	12.09
	Current input	A	15.8-15.0-14.5	20.4-19.3-18.6
	COP (kW / kW)		3.99	3.72
Temp. range of heating	Indoor temp.	D.B.	15 to 27degC (59 to 81degF)	15 to 27degC (59 to 81degF)
	Outdoor temp.	W.B.	-20 to 15.5degC (-4 to 60degF)	-20 to 15.5degC (-4 to 60degF)
Indoor unit connectable	Total capacity		50 - 130% of outdoor unit capacity	50 - 130% of outdoor unit capacity
	Model / Quantity		P15 - P250/1 - 26	P15 - P250/1 - 30
Sound pressure level (measured in anechoic room)		dB <A>	59	60
Diameter of refrigerant pipe	Liquid	mm (in.)	9.52 (3/8) Brazed (12.7 (1/2) Brazed,total length>=40m)	12.7 (1/2) Brazed
	Gas	mm (in.)	22.2(7/8) Brazed	28.58(1-1/8) Brazed

External finish			Pre-coated galvanized steel sheets (+powder coating for -BS type)	Pre-coated galvanized steel sheets (+powder coating for -BS type)
			<MUNSELL 5Y 8/1 or similar>	<MUNSELL 5Y 8/1 or similar>
External dimension H x W x D		mm	1,710(without legs 1,650)x920x760	1,710(without legs 1,650)x1220x760
		in.	67-3/8(without legs 65)x36-1/4x29-15/16	67-3/8(without legs 65)x48-1/16x29-15/16
Net weight		kg (lb)	215 (474)	245 (541)
Heat exchanger			Salt-resistant cross fin & copper tube	Salt-resistant cross fin & copper tube
Compressor	Type		Inverter scroll hermetic compressor	Inverter scroll hermetic compressor
	Manufacture		MITSUBISHI ELECTRIC CORPORATION	MITSUBISHI ELECTRIC CORPORATION
	Starting method		Inverter	Inverter
	Motor output	kW	8.2	10.3
	Case heater	kW	0.045	0.045
	Lubricant		MEL32	MEL32
FAN	Air flow rate	m^3 / min	185	225
		L / s	3,083	3,750
		cfm	6,532	7,945
	External static press.	*4	0 Pa (0mmH_2O)	0 Pa (0mmH_2O)
	Type x Quantity		Propeller fan x 1	Propeller fan x 1
	Control, Driving mechanism		Inverter-control, Direct-driven by motor	Inverter-control, Direct-driven by motor
	Motor output	kW	0.46 x 1	0.46 x 1
HIC circuit (HIC: Heat Inter-Changer)			Copper pipe,tube-in-tube structure	Copper pipe,tube-in-tube structure
Protection	High pressure protection		High pres. Sensor & High pres. Switch at 4.15 MPa (601psi)	High pres. Sensor & High pres. Switch at 4.15 MPa (601psi)
	Inverter circuit (COMP. / FAN)		Over-heat protection, Over-current protection	Over-heat protection, Over-current protection
	Compressor		Over-heat protection	Over-heat protection
	Fan motor		Thermal switch	Thermal switch
Defrosting method			Auto-defrost mode (Reversed refrigerant circle)	Auto-defrost mode (Reversed refrigerant circle)
Refrigerant	Type x original charge		R410A x 9.0 kg (20lb)	R410A x 11.5 kg (26lb)
	Control		LEV and HIC circuit	LEV and HIC circuit
Drawing	External		KB94G531	KB94G532
	Wiring		KE94C140	KE94C140
Standard attachment	Document		Installation Manual	Installation Manual
	Accessory		Refrigerant conn. pipe	Refrigerant conn. pipe
Optional parts			joint :CMY-Y102S/L-G2 Header :CMY-Y104/108/1010-G	joint :CMY-Y102S/L-G2, Y202-G2 Header :CMY-Y104/108/1010-G
Remarks			*Details on foundation work, duct work, insulation work, electrical wiring, power source switch, and other items shall be referred to the Installation Manual. *Due to continuing improvement, above specifications may be subject to change without notice.	

Notes :	*1 Nominal cooling conditions	*2 Nominal cooling conditions	*3 Nominal heating conditions	Unit converter
Indoor :	27degCDB/19degCWB (81degFDB/66degFWB)	27degCDB/19.5degCWB (81degFDB/67degFWB)	20degCDB(68degFDB)	kcal = kW x 860
Outdoor :	35degCDB(95degFDB)	35degCDB(95degFDB)	7degCDB/6degCWB (45degFDB/43degFWB)	Btu/h = kW x 3,412
Pipe length :	7.5m(24-9/16ft)	5m(16-3/8ft)	7.5m(24-9/16ft)	cfm = m^3/min x 35.31
Level difference :	0m(0ft)	0m(0ft)	0m(0ft)	lb = kg/0.4536
*Nominal condition *1,*3 are subject to JIS B8615-1				*Above specification data is subject to rounding variation.
*4 External static pressure option is available (30Pa, 60Pa/3.1mmH_2O, 6.1mmH_2O)				

Y

Model			PUHY-P400YHM-A(-BS)	PUHY-P450YHM-A(-BS)
Power source			3-phase 4-wire 380-400-415V 50/60Hz	3-phase 4-wire 380-400-415V 50/60Hz
Cooling capacity (Nominal)	*1	kW	45.0	50.0
	*1	kcal / h	38,700	43,000
	*1	Btu / h	153,500	170,600
	*2	kcal / h	40,000	45,000
	Power input	kW	13.23	16.28
	Current input	A	22.3-21.2-20.4	27.4-26.1-25.1
	COP (kW / kW)		3.40	3.07
Temp. range of cooling	Indoor	W.B.	15 to 24degC (59 to 75degF)	15 to 24degC (59 to 75degF)
	Outdoor	D.B.	- 5 to 43degC (23 to 109degF)	- 5 to 43degC (23 to 109degF)
Heating capacity (Nominal)	*3	kW	50.0	56.0
	*3	kcal / h	43,000	48,200
	*3	Btu / h	170,600	191,100
	Power input	kW	13.47	15.38
	Current input	A	22.7-21.6-20.8	25.9-24.6-23.7
	COP (kW / kW)		3.71	3.64
Temp. range of heating	Indoor temp.	D.B.	15 to 27degC (59 to 81degF)	15 to 27degC (59 to 81degF)
	Outdoor temp.	W.B.	-20 to 15.5degC (-4 to 60degF)	-20 to 15.5degC (-4 to 60degF)
Indoor unit connectable	Total capacity		50 - 130% of outdoor unit capacity	50 - 130% of outdoor unit capacity
	Model / Quantity		P15 - P250/1 - 34	P15 - P250/1 - 39
Sound pressure level (measured in anechoic room)		dB <A>	61	62
Diameter of refrigerant pipe	Liquid	mm (in.)	12.7 (1/2) Brazed	15.88 (5/8) Brazed
	Gas	mm (in.)	28.58(1-1/8) Brazed	28.58(1-1/8) Brazed

External finish			Pre-coated galvanized steel sheets (+powder coating for -BS type)	Pre-coated galvanized steel sheets (+powder coating for -BS type)
			<MUNSELL 5Y 8/1 or similar>	<MUNSELL 5Y 8/1 or similar>
External dimension H x W x D		mm	1,710(without legs 1,650)x1220x760	1,710(without legs 1,650)x1220x760
		in.	67-3/8(without legs 65)x48-1/16x29-15/16	67-3/8(without legs 65)x48-1/16x29-15/16
Net weight		kg (lb)	245 (541)	245 (541)
Heat exchanger			Salt-resistant cross fin & copper tube	Salt-resistant cross fin & copper tube
Compressor	Type		Inverter scroll hermetic compressor	Inverter scroll hermetic compressor
	Manufacture		MITSUBISHI ELECTRIC CORPORATION	MITSUBISHI ELECTRIC CORPORATION
	Starting method		Inverter	Inverter
	Motor output	kW	10.5	12.0
	Case heater	kW	0.045	0.045
	Lubricant		MEL32	MEL32
FAN	Air flow rate	m^3 / min	225	225
		L / s	3,750	3,750
		cfm	7,945	7,945
	External static press.	*4	0 Pa (0mmH_2O)	0 Pa (0mmH_2O)
	Type x Quantity		Propeller fan x 1	Propeller fan x 1
	Control, Driving mechanism		Inverter-control, Direct-driven by motor	Inverter-control, Direct-driven by motor
	Motor output	kW	0.46 x 1	0.46 x 1
HIC circuit (HIC: Heat Inter-Changer)			Copper pipe,tube-in-tube structure	Copper pipe,tube-in-tube structure
Protection	High pressure protection		High pres. Sensor & High pres. Switch at 4.15 MPa (601psi)	High pres. Sensor & High pres. Switch at 4.15 MPa (601psi)
	Inverter circuit (COMP. / FAN)		Over-heat protection, Over-current protection	Over-heat protection, Over-current protection
	Compressor		Over-heat protection	Over-heat protection
	Fan motor		Thermal switch	Thermal switch
Defrosting method			Auto-defrost mode (Reversed refrigerant circle)	Auto-defrost mode (Reversed refrigerant circle)
Refrigerant	Type x original charge		R410A x 11.5 kg (26lb)	R410A x 11.5 kg (26lb)
	Control		LEV and HIC circuit	LEV and HIC circuit
Drawing	External		KB94G532	KB94G532
	Wiring		KE94C140	KE94C140
Standard attachment	Document		Installation Manual	Installation Manual
	Accessory		Refrigerant conn. pipe	Refrigerant conn. pipe
Optional parts			joint :CMY-Y102S/L-G2,CMY-Y202-G2 Header :CMY-Y104/108/1010-G	joint :CMY-Y102S/L-G2,CMY-Y202-G2 Header :CMY-Y104/108/1010-G
Remarks			*Details on foundation work, duct work, insulation work, electrical wiring, power source switch, and other items shall be referred to the Installation Manual. *Due to continuing improvement, above specifications may be subject to change without notice.	

Notes :	*1 Nominal cooling conditions	*2 Nominal cooling conditions	*3 Nominal heating conditions	Unit converter
Indoor :	27degCDB/19degCWB (81degFDB/66degFWB)	27degCDB/19.5degCWB (81degFDB/67degFWB)	20degCDB(68degFDB)	kcal = kW x 860
Outdoor :	35degCDB(95degFDB)	35degCDB(95degFDB)	7degCDB/6degCWB (45degFDB/43degFWB)	Btu/h = kW x 3,412
Pipe length :	7.5m(24-9/16ft)	5m(16-3/8ft)	7.5m(24-9/16ft)	cfm = m^3/min x 35.31
Level difference :	0m(0ft)	0m(0ft)	0m(0ft)	lb = kg/0.4536
*Nominal condition *1,*3 are subject to JIS B8615-1				*Above specification data is subject to rounding variation.
*4 External static pressure option is available (30Pa, 60Pa/3.1mmH_2O, 6.1mmH_2O)				

Model			PUHY-P500YSHM-A(-BS)
Power source			3-phase 4-wire 380-400-415V 50/60Hz
Cooling capacity (Nominal)	*1	kW	56.0
	*1	kcal / h	48,200
	*1	Btu / h	191,100
	*2	kcal / h	50,000
	Power input	kW	16.47
	Current input	A	27.8-26.4-25.4
	COP (kW / kW)		3.40
Temp. range of cooling	Indoor	W.B.	15 to 24degC (59 to 75degF)
	Outdoor	D.B.	- 5 to 43degC (23 to 109degF)
Heating capacity (Nominal)	*3	kW	63.0
	*3	kcal / h	54,200
	*3	Btu / h	215,000
	Power input	kW	16.40
	Current input	A	27.6-26.3-25.3
	COP (kW / kW)		3.84
Temp. range of heating	Indoor temp.	D.B.	15 to 27degC (59 to 81degF)
	Outdoor temp.	W.B.	-20 to 15.5degC (-4 to 60degF)
Indoor unit connectable	Total capacity		50 - 130% of outdoor unit capacity
	Model / Quantity		P15 - P250/1 - 43
Sound pressure level (measured in anechoic room)		dB <A>	60
Diameter of refrigerant pipe	Liquid	mm (in.)	15.88 (5/8) Brazed
	Gas	mm (in.)	28.58(1-1/8) Brazed

Set Model

Model			PUHY-P250YHM-A(-BS)	PUHY-P250YHM-A(-BS)
External finish			Pre-coated galvanized steel sheets (+powder coating for -BS type)	
			<MUNSELL 5Y 8/1 or similar>	
External dimension H x W x D		mm	1,710(without legs 1,650)x920x760	1,710(without legs 1,650)x920x760
		in.	67-3/8(without legs 65)x36-1/4x29-15/16	67-3/8(without legs 65)x36-1/4x29-15/16
Net weight		kg (lb)	200 (441)	200 (441)
Heat exchanger			Salt-resistant cross fin & copper tube	Salt-resistant cross fin & copper tube
Compressor	Type		Inverter scroll hermetic compressor	Inverter scroll hermetic compressor
	Manufacture		MITSUBISHI ELECTRIC CORPORATION	
	Starting method		Inverter	Inverter
	Motor output	kW	6.7	6.7
	Case heater	kW	0.035	0.035
	Lubricant		MEL32	MEL32
FAN	Air flow rate	m^3 / min	185	185
		L / s	3,083	3,083
		cfm	6,532	6,532
	External static press.	*4	0 Pa (0mmH_2O)	0 Pa (0mmH_2O)
	Type x Quantity		Propeller fan x 1	Propeller fan x 1
	Control, Driving mechanism		Inverter-control, Direct-driven by motor	Inverter-control, Direct-driven by motor
	Motor output	kW	0.46 x 1	0.46 x 1
HIC circuit (HIC: Heat Inter-Changer)			Copper pipe,tube-in-tube structure	
Protection	High pressure protection		High pres. Sensor & High pres. Switch at 4.15 MPa (601psi)	
	Inverter circuit (COMP. / FAN)		Over-heat protection, Over-current protection	
	Compressor		Over-heat protection	
	Fan motor		Thermal switch	
Defrosting method			Auto-defrost mode (Reversed refrigerant circle)	
Refrigerant	Type x original charge		R410A x 9.0 kg (20lb)	R410A x 9.0 kg (20lb)
	Control		LEV and HIC circuit	
Pipe between unit distributor	Liquid	mm (in.)	9.52 (3/8) Brazed	9.52 (3/8) Brazed
	Gas	mm (in.)	22.2(7/8) Brazed	22.2(7/8) Brazed
Drawing	External		KB94G533	
	Wiring		KE94C140	KE94C140
Standard attachment	Document		Installation Manual	
	Accessory		Refrigerant conn. pipe	
Optional parts			Outdoor Twinning Kit : CMY-Y100VBK2 joint :CMY-Y102S/L-G2,CMY-Y202-G2 Header :CMY-Y104/108/1010-G	
Remarks			*Details on foundation work, duct work, insulation work, electrical wiring, power source switch, and other items shall be referred to the Installation Manual. *Due to continuing improvement, above specifications may be subject to change without notice.	

Notes :	*1 Nominal cooling conditions	*2 Nominal cooling conditions	*3 Nominal heating conditions	Unit converter
Indoor :	27degCDB/19degCWB (81degFDB/66degFWB)	27degCDB/19.5degCWB (81degFDB/67degFWB)	20degCDB(68degFDB)	kcal = kW x 860
Outdoor :	35degCDB(95degFDB)	35degCDB(95degFDB)	7degCDB/6degCWB (45degFDB/43degFWB)	Btu/h = kW x 3,412
Pipe length :	7.5m(24-9/16ft)	5m(16-3/8ft)	7.5m(24-9/16ft)	cfm = m^3/min x 35.31
Level difference :	0m(0ft)	0m(0ft)	0m(0ft)	lb = kg/0.4536
*Nominal condition *1,*3 are subject to JIS B8615-1				*Above specification data is subject to rounding variation.
*4 External static pressure option is available (30Pa, 60Pa/3.1mmH_2O, 6.1mmH_2O)				

Y

Model			PUHY-P550YSHM-A(-BS)
Power source			3-phase 4-wire 380-400-415V 50/60Hz
Cooling capacity (Nominal)	*1	kW	63.0
	*1	kcal / h	54,200
	*1	Btu / h	215,000
	*2	kcal / h	55,000
	Power input	kW	18.36
	Current input	A	30.9-29.4-28.3
	COP (kW / kW)		3.43
Temp. range of cooling	Indoor	W.B.	15 to 24degC (59 to 75degF)
	Outdoor	D.B.	- 5 to 43degC (23 to 109degF)
Heating capacity (Nominal)	*3	kW	69.0
	*3	kcal / h	59,300
	*3	Btu / h	235,400
	Power input	kW	18.06
	Current input	A	30.4-28.9-27.9
	COP (kW / kW)		3.82
Temp. range of heating	Indoor temp.	D.B.	15 to 27degC (59 to 81degF)
	Outdoor temp.	W.B.	-20 to 15.5degC (-4 to 60degF)
Indoor unit connectable	Total capacity		50 - 130% of outdoor unit capacity
	Model / Quantity		P15 - P250/1 - 47
Sound pressure level (measured in anechoic room)		dB <A>	61
Diameter of refrigerant pipe	Liquid	mm (in.)	15.88 (5/8) Brazed
	Gas	mm (in.)	28.58(1-1/8) Brazed

Set Model

Model			PUHY-P250YHM-A(-BS)	PUHY-P300YHM-A(-BS)
External finish			Pre-coated galvanized steel sheets (+powder coating for -BS type)	
			<MUNSELL 5Y 8/1 or similar>	
External dimension H x W x D		mm	1,710(without legs 1,650)x920x760	1,710(without legs 1,650)x920x760
		in.	67-3/8(without legs 65)x36-1/4x29-15/16	67-3/8(without legs 65)x36-1/4x29-15/16
Net weight		kg (lb)	200 (441)	215 (474)
Heat exchanger			Salt-resistant cross fin & copper tube	Salt-resistant cross fin & copper tube
Compressor	Type		Inverter scroll hermetic compressor	Inverter scroll hermetic compressor
	Manufacture		MITSUBISHI ELECTRIC CORPORATION	
	Starting method		Inverter	Inverter
	Motor output	kW	6.7	8.2
	Case heater	kW	0.035	0.045
	Lubricant		MEL32	MEL32
FAN	Air flow rate	m^3 / min	185	185
		L / s	3,083	3,083
		cfm	6,532	6,532
	External static press.	*4	0 Pa (0mmH_2O)	0 Pa (0mmH_2O)
	Type x Quantity		Propeller fan x 1	Propeller fan x 1
	Control, Driving mechanism		Inverter-control, Direct-driven by motor	Inverter-control, Direct-driven by motor
	Motor output	kW	0.46 x 1	0.46 x 1
HIC circuit (HIC: Heat Inter-Changer)			Copper pipe,tube-in-tube structure	
Protection	High pressure protection		High pres. Sensor & High pres. Switch at 4.15 MPa (601psi)	
	Inverter circuit (COMP. / FAN)		Over-heat protection, Over-current protection	
	Compressor		Over-heat protection	
	Fan motor		Thermal switch	
Defrosting method			Auto-defrost mode (Reversed refrigerant circle)	
Refrigerant	Type x original charge		R410A x 9.0 kg (20lb)	R410A x 9.0 kg (20lb)
	Control		LEV and HIC circuit	
Pipe between unit distributor	Liquid	mm (in.)	9.52 (3/8) Brazed	12.7 (1/2) Brazed
	Gas	mm (in.)	22.2(7/8) Brazed	22.2(7/8) Brazed
Drawing	External		KB94G533	
	Wiring		KE94C140	KE94C140
Standard attachment	Document		Installation Manual	
	Accessory		Refrigerant conn. pipe	
Optional parts			Outdoor Twinning Kit : CMY-Y100VBK2 joint :CMY-Y102S/L-G2,CMY-Y202/302-G2 Header :CMY-Y104/108/1010-G	
Remarks			*Details on foundation work, duct work, insulation work, electrical wiring, power source switch, and other items shall be referred to the Installation Manual. *Due to continuing improvement, above specifications may be subject to change without notice.	

Notes :	*1 Nominal cooling conditions	*2 Nominal cooling conditions	*3 Nominal heating conditions	Unit converter
Indoor :	27degCDB/19degCWB (81degFDB/66degFWB)	27degCDB/19.5degCWB (81degFDB/67degFWB)	20degCDB(68degFDB)	kcal = kW x 860
Outdoor :	35degCDB(95degFDB)	35degCDB(95degFDB)	7degCDB/6degCWB (45degFDB/43degFWB)	Btu/h = kW x 3,412
Pipe length :	7.5m(24-9/16ft)	5m(16-3/8ft)	7.5m(24-9/16ft)	cfm = m^3/min x 35.31
Level difference :	0m(0ft)	0m(0ft)	0m(0ft)	lb = kg/0.4536
*Nominal condition *1,*3 are subject to JIS B8615-1				*Above specification data is subject to rounding variation.
*4 External static pressure option is available (30Pa, 60Pa/3.1mmH_2O, 6.1mmH_2O)				

Model			PUHY-P600YSHM-A(-BS)
Power source			3-phase 4-wire 380-400-415V 50/60Hz
Cooling capacity (Nominal)	*1	kW	69.0
	*1	kcal / h	59,300
	*1	Btu / h	235,400
	*2	kcal / h	60,000
	Power input	kW	18.75
	Current input	A	31.6-30.0-28.9
	COP (kW / kW)		3.68
Temp. range of cooling	Indoor	W.B.	15 to 24degC (59 to 75degF)
	Outdoor	D.B.	- 5 to 43degC (23 to 109degF)
Heating capacity (Nominal)	*3	kW	76.5
	*3	kcal / h	65,800
	*3	Btu / h	261,000
	Power input	kW	19.92
	Current input	A	33.6-31.9-30.7
	COP (kW / kW)		3.84
Temp. range of heating	Indoor temp.	D.B.	15 to 27degC (59 to 81degF)
	Outdoor temp.	W.B.	-20 to 15.5degC (-4 to 60degF)
Indoor unit connectable	Total capacity		50 - 130% of outdoor unit capacity
	Model / Quantity		P15 - P250/1 - 50
Sound pressure level (measured in anechoic room)		dB <A>	62
Diameter of refrigerant pipe	Liquid	mm (in.)	15.88 (5/8) Brazed
	Gas	mm (in.)	28.58(1-1/8) Brazed

Set Model

Model			PUHY-P250YHM-A(-BS)	PUHY-P350YHM-A(-BS)
External finish			Pre-coated galvanized steel sheets (+powder coating for -BS type)	
			<MUNSELL 5Y 8/1 or similar>	
External dimension H x W x D		mm	1,710(without legs 1,650)x920x760	1,710(without legs 1,650)x1220x760
		in.	67-3/8(without legs 65)x36-1/4x29-15/16	67-3/8(without legs 65)x48-1/16x29-15/16
Net weight		kg (lb)	200 (441)	245 (541)
Heat exchanger			Salt-resistant cross fin & copper tube	Salt-resistant cross fin & copper tube
Compressor	Type		Inverter scroll hermetic compressor	Inverter scroll hermetic compressor
	Manufacture		MITSUBISHI ELECTRIC CORPORATION	
	Starting method		Inverter	Inverter
	Motor output	kW	6.7	10.3
	Case heater	kW	0.035	0.045
	Lubricant		MEL32	MEL32
FAN	Air flow rate	m^3 / min	185	225
		L / s	3,083	3,750
		cfm	6,532	7,945
	External static press.	*4	0 Pa (0mmH_2O)	0 Pa (0mmH_2O)
	Type x Quantity		Propeller fan x 1	Propeller fan x 1
	Control, Driving mechanism		Inverter-control, Direct-driven by motor	Inverter-control, Direct-driven by motor
	Motor output	kW	0.46 x 1	0.46 x 1
HIC circuit (HIC: Heat Inter-Changer)			Copper pipe,tube-in-tube structure	
Protection	High pressure protection		High pres. Sensor & High pres. Switch at 4.15 MPa (601psi)	
	Inverter circuit (COMP. / FAN)		Over-heat protection, Over-current protection	
	Compressor		Over-heat protection	
	Fan motor		Thermal switch	
Defrosting method			Auto-defrost mode (Reversed refrigerant circle)	
Refrigerant	Type x original charge		R410A x 9.0 kg (20lb)	R410A x 11.5 kg (26lb)
	Control		LEV and HIC circuit	
Pipe between unit distributor	Liquid	mm (in.)	9.52 (3/8) Brazed	12.7 (1/2) Brazed
	Gas	mm (in.)	22.2(7/8) Brazed	28.58(1-1/8) Brazed
Drawing	External		KB94G534	
	Wiring		KE94C140	KE94C140
Standard attachment	Document		Installation Manual	
	Accessory		Refrigerant conn. pipe	
Optional parts			Outdoor Twinning Kit : CMY-Y100VBK2 joint :CMY-Y102S/L-G2,CMY-Y202/302-G2 Header :CMY-Y104/108/1010-G	
Remarks			*Details on foundation work, duct work, insulation work, electrical wiring, power source switch, and other items shall be referred to the Installation Manual. *Due to continuing improvement, above specifications may be subject to change without notice.	

Notes :	*1 Nominal cooling conditions	*2 Nominal cooling conditions	*3 Nominal heating conditions	Unit converter
Indoor :	27degCDB/19degCWB (81degFDB/66degFWB)	27degCDB/19.5degCWB (81degFDB/67degFWB)	20degCDB(68degFDB)	kcal = kW x 860
Outdoor :	35degCDB(95degFDB)	35degCDB(95degFDB)	7degCDB/6degCWB (45degFDB/43degFWB)	Btu/h = kW x 3,412
Pipe length :	7.5m(24-9/16ft)	5m(16-3/8ft)	7.5m(24-9/16ft)	cfm = m^3/min x 35.31
Level difference :	0m(0ft)	0m(0ft)	0m(0ft)	lb = kg/0.4536
*Nominal condition *1,*3 are subject to JIS B8615-1				*Above specification data is subject to rounding variation.
*4 External static pressure option is available (30Pa, 60Pa/3.1mmH_2O, 6.1mmH_2O)				

1. SPECIFICATIONS

Y

Model			PUHY-P650YSHM-A(-BS)
Power source			3-phase 4-wire 380-400-415V 50/60Hz
Cooling capacity (Nominal)	*1	kW	73.0
	*1	kcal / h	62,800
	*1	Btu / h	249,100
	*2	kcal / h	65,000
	Power input	kW	20.79
	Current input	A	35.0-33.3-32.1
	COP (kW / kW)		3.51
Temp. range of cooling	Indoor	W.B.	15 to 24degC (59 to 75degF)
	Outdoor	D.B.	- 5 to 43degC (23 to 109degF)
Heating capacity (Nominal)	*3	kW	81.5
	*3	kcal / h	70,100
	*3	Btu / h	278,100
	Power input	kW	21.90
	Current input	A	36.9-35.1-33.8
	COP (kW / kW)		3.72
Temp. range of heating	Indoor temp.	D.B.	15 to 27degC (59 to 81degF)
	Outdoor temp.	W.B.	-20 to 15.5degC (-4 to 60degF)
Indoor unit connectable	Total capacity		50 - 130% of outdoor unit capacity
	Model / Quantity		P15 - P250/1 - 50
Sound pressure level (measured in anechoic room)		dB <A>	62.5
Diameter of refrigerant pipe	Liquid	mm (in.)	15.88 (5/8) Brazed
	Gas	mm (in.)	28.58(1-1/8) Brazed

Set Model

Model			PUHY-P300YHM-A(-BS)	PUHY-P350YHM-A(-BS)
External finish			Pre-coated galvanized steel sheets (+powder coating for -BS type)	
			<MUNSELL 5Y 8/1 or similar>	
External dimension H x W x D		mm	1,710(without legs 1,650)x920x760	1,710(without legs 1,650)x1220x760
		in.	67-3/8(without legs 65)x36-1/4x29-15/16	67-3/8(without legs 65)x48-1/16x29-15/16
Net weight		kg (lb)	215 (474)	245 (541)
Heat exchanger			Salt-resistant cross fin & copper tube	Salt-resistant cross fin & copper tube
Compressor	Type		Inverter scroll hermetic compressor	Inverter scroll hermetic compressor
	Manufacture		MITSUBISHI ELECTRIC CORPORATION	
	Starting method		Inverter	Inverter
	Motor output	kW	8.2	10.3
	Case heater	kW	0.045	0.045
	Lubricant		MEL32	MEL32
FAN	Air flow rate	m^3 / min	185	225
		L / s	3,083	3,750
		cfm	6,532	7,945
	External static press.	*4	0 Pa (0mmH_2O)	0 Pa (0mmH_2O)
	Type x Quantity		Propeller fan x 1	Propeller fan x 1
	Control, Driving mechanism		Inverter-control, Direct-driven by motor	Inverter-control, Direct-driven by motor
	Motor output	kW	0.46 x 1	0.46 x 1
HIC circuit (HIC: Heat Inter-Changer)			Copper pipe,tube-in-tube structure	
Protection	High pressure protection		High pres. Sensor & High pres. Switch at 4.15 MPa (601psi)	
	Inverter circuit (COMP. / FAN)		Over-heat protection, Over-current protection	
	Compressor		Over-heat protection	
	Fan motor		Thermal switch	
Defrosting method			Auto-defrost mode (Reversed refrigerant circle)	
Refrigerant	Type x original charge		R410A x 9.0 kg (20lb)	R410A x 11.5 kg (26lb)
	Control		LEV and HIC circuit	
Pipe between unit distributor	Liquid	mm (in.)	12.7 (1/2) Brazed	12.7 (1/2) Brazed
	Gas	mm (in.)	22.2(7/8) Brazed	28.58(1-1/8) Brazed
Drawing	External		KB94G534	
	Wiring		KE94C140	KE94C140
Standard attachment	Document		Installation Manual	
	Accessory		Refrigerant conn. pipe	
Optional parts			Outdoor Twinning Kit : CMY-Y100VBK2 joint :CMY-Y102S/L-G2,CMY-Y202/302-G2 Header :CMY-Y104/108/1010-G	
Remarks			*Details on foundation work, duct work, insulation work, electrical wiring, power source switch, and other items shall be referred to the Installation Manual. *Due to continuing improvement, above specifications may be subject to change without notice.	

Notes :	*1 Nominal cooling conditions	*2 Nominal cooling conditions	*3 Nominal heating conditions	Unit converter
Indoor :	27degCDB/19degCWB (81degFDB/66degFWB)	27degCDB/19.5degCWB (81degFDB/67degFWB)	20degCDB(68degFDB)	kcal = kW x 860
Outdoor :	35degCDB(95degFDB)	35degCDB(95degFDB)	7degCDB/6degCWB (45degFDB/43degFWB)	Btu/h = kW x 3,412
Pipe length :	7.5m(24-9/16ft)	5m(16-3/8ft)	7.5m(24-9/16ft)	cfm = m^3/min x 35.31
Level difference :	0m(0ft)	0m(0ft)	0m(0ft)	lb = kg/0.4536
*Nominal condition *1,*3 are subject to JIS B8615-1				*Above specification data is subject to rounding variation.
*4 External static pressure option is available (30Pa, 60Pa/3.1mmH_2O, 6.1mmH_2O)				

Model			PUHY-P700YSHM-A(-BS)
Power source			3-phase 4-wire 380-400-415V 50/60Hz
Cooling capacity (Nominal)	*1	kW	80.0
	*1	kcal / h	68,800
	*1	Btu / h	273,000
	*2	kcal / h	70,000
	Power input	kW	22.47
	Current input	A	37.9-36.0-34.7
	COP (kW / kW)		3.56
Temp. range of cooling	Indoor	W.B.	15 to 24degC (59 to 75degF)
	Outdoor	D.B.	- 5 to 43degC (23 to 109degF)
Heating capacity (Nominal)	*3	kW	88.0
	*3	kcal / h	75,700
	*3	Btu / h	300,300
	Power input	kW	23.71
	Current input	A	40.0-38.0-36.6
	COP (kW / kW)		3.71
Temp. range of heating	Indoor temp.	D.B.	15 to 27degC (59 to 81degF)
	Outdoor temp.	W.B.	-20 to 15.5degC (-4 to 60degF)
Indoor unit connectable	Total capacity		50 - 130% of outdoor unit capacity
	Model / Quantity		P15 - P250/1 - 50
Sound pressure level (measured in anechoic room)		dB <A>	63
Diameter of refrigerant pipe	Liquid	mm (in.)	19.05 (3/4) Brazed
	Gas	mm (in.)	34.93(1-3/8) Brazed

Set Model

Model			PUHY-P350YHM-A(-BS)	PUHY-P350YHM-A(-BS)
External finish			Pre-coated galvanized steel sheets (+powder coating for -BS type)	
			<MUNSELL 5Y 8/1 or similar>	
External dimension H x W x D		mm	1,710(without legs 1,650)x1220x760	1,710(without legs 1,650)x1220x760
		in.	67-3/8(without legs 65)x48-1/16x29-15/16	67-3/8(without legs 65)x48-1/16x29-15/16
Net weight		kg (lb)	245 (541)	245 (541)
Heat exchanger			Salt-resistant cross fin & copper tube	Salt-resistant cross fin & copper tube
Compressor	Type		Inverter scroll hermetic compressor	Inverter scroll hermetic compressor
	Manufacture		MITSUBISHI ELECTRIC CORPORATION	
	Starting method		Inverter	Inverter
	Motor output	kW	10.3	10.3
	Case heater	kW	0.045	0.045
	Lubricant		MEL32	MEL32
FAN	Air flow rate	m^3 / min	225	225
		L / s	3,750	3,750
		cfm	7,945	7,945
	External static press.	*4	0 Pa (0mmH_2O)	0 Pa (0mmH_2O)
	Type x Quantity		Propeller fan x 1	Propeller fan x 1
	Control, Driving mechanism		Inverter-control, Direct-driven by motor	Inverter-control, Direct-driven by motor
	Motor output	kW	0.46 x 1	0.46 x 1
HIC circuit (HIC: Heat Inter-Changer)			Copper pipe,tube-in-tube structure	
Protection	High pressure protection		High pres. Sensor & High pres. Switch at 4.15 MPa (601psi)	
	Inverter circuit (COMP. / FAN)		Over-heat protection, Over-current protection	
	Compressor		Over-heat protection	
	Fan motor		Thermal switch	
Defrosting method			Auto-defrost mode (Reversed refrigerant circle)	
Refrigerant	Type x original charge		R410A x 11.5 kg (26lb)	R410A x 11.5 kg (26lb)
	Control		LEV and HIC circuit	
Pipe between unit distributor	Liquid	mm (in.)	12.7 (1/2) Brazed	12.7 (1/2) Brazed
	Gas	mm (in.)	28.58(1-1/8) Brazed	28.58(1-1/8) Brazed
Drawing	External		KB94G535	
	Wiring		KE94C140	KE94C140
Standard attachment	Document		Installation Manual	
	Accessory		Refrigerant conn. pipe	
Optional parts			Outdoor Twinning Kit : CMY-Y200VBK2 joint :CMY-Y102S/L-G2,CMY-Y202/302-G2 Header :CMY-Y104/108/1010-G	
Remarks			*Details on foundation work, duct work, insulation work, electrical wiring, power source switch, and other items shall be referred to the Installation Manual. *Due to continuing improvement, above specifications may be subject to change without notice.	

Notes :	*1 Nominal cooling conditions	*2 Nominal cooling conditions	*3 Nominal heating conditions	Unit converter
Indoor :	27degCDB/19degCWB (81degFDB/66degFWB)	27degCDB/19.5degCWB (81degFDB/67degFWB)	20degCDB(68degFDB)	kcal = kW x 860
Outdoor :	35degCDB(95degFDB)	35degCDB(95degFDB)	7degCDB/6degCWB (45degFDB/43degFWB)	Btu/h = kW x 3,412
Pipe length :	7.5m(24-9/16ft)	5m(16-3/8ft)	7.5m(24-9/16ft)	cfm = m^3/min x 35.31
Level difference :	0m(0ft)	0m(0ft)	0m(0ft)	lb = kg/0.4536
*Nominal condition *1,*3 are subject to JIS B8615-1				*Above specification data is subject to rounding variation.
*4 External static pressure option is available (30Pa, 60Pa/3.1mmH_2O, 6.1mmH_2O)				

Y

Model			PUHY-P750YSHM-A(-BS)
Power source			3-phase 4-wire 380-400-415V 50/60Hz
Cooling capacity (Nominal)	*1	kW	85.0
	*1	kcal / h	73,100
	*1	Btu / h	290,000
	*2	kcal / h	75,000
	Power input	kW	25.07
	Current input	A	42.3-40.2-38.7
	COP (kW / kW)		3.39
Temp. range of cooling	Indoor	W.B.	15 to 24degC (59 to 75degF)
	Outdoor	D.B.	- 5 to 43degC (23 to 109degF)
Heating capacity (Nominal)	*3	kW	95.0
	*3	kcal / h	81,700
	*3	Btu / h	324,100
	Power input	kW	25.46
	Current input	A	42.9-40.8-39.3
	COP (kW / kW)		3.73
Temp. range of heating	Indoor temp.	D.B.	15 to 27degC (59 to 81degF)
	Outdoor temp.	W.B.	-20 to 15.5degC (-4 to 60degF)
Indoor unit connectable	Total capacity		50 - 130% of outdoor unit capacity
	Model / Quantity		P15 - P250/1 - 50
Sound pressure level (measured in anechoic room)		dB <A>	63.5
Diameter of refrigerant pipe	Liquid	mm (in.)	19.05 (3/4) Brazed
	Gas	mm (in.)	34.93(1-3/8) Brazed

Set Model

Model			PUHY-P350YHM-A(-BS)	PUHY-P400YHM-A(-BS)
External finish			Pre-coated galvanized steel sheets (+powder coating for -BS type)	
			<MUNSELL 5Y 8/1 or similar>	
External dimension H x W x D		mm	1,710(without legs 1,650)x1220x760	1,710(without legs 1,650)x1220x760
		in.	67-3/8(without legs 65)x48-1/16x29-15/16	67-3/8(without legs 65)x48-1/16x29-15/16
Net weight		kg (lb)	245 (541)	245 (541)
Heat exchanger			Salt-resistant cross fin & copper tube	Salt-resistant cross fin & copper tube
Compressor	Type		Inverter scroll hermetic compressor	Inverter scroll hermetic compressor
	Manufacture		MITSUBISHI ELECTRIC CORPORATION	
	Starting method		Inverter	Inverter
	Motor output	kW	10.3	10.5
	Case heater	kW	0.045	0.045
	Lubricant		MEL32	MEL32
FAN	Air flow rate	m^3 / min	225	225
		L / s	3,750	3,750
		cfm	7,945	7,945
	External static press.	*4	0 Pa (0mmH_2O)	0 Pa (0mmH_2O)
	Type x Quantity		Propeller fan x 1	Propeller fan x 1
	Control, Driving mechanism		Inverter-control, Direct-driven by motor	Inverter-control, Direct-driven by motor
	Motor output	kW	0.46 x 1	0.46 x 1
HIC circuit (HIC: Heat Inter-Changer)			Copper pipe,tube-in-tube structure	
Protection	High pressure protection		High pres. Sensor & High pres. Switch at 4.15 MPa (601psi)	
	Inverter circuit (COMP. / FAN)		Over-heat protection, Over-current protection	
	Compressor		Over-heat protection	
	Fan motor		Thermal switch	
Defrosting method			Auto-defrost mode (Reversed refrigerant circle)	
Refrigerant	Type x original charge		R410A x 11.5 kg (26lb)	R410A x 11.5 kg (26lb)
	Control		LEV and HIC circuit	
Pipe between unit distributor	Liquid	mm (in.)	12.7 (1/2) Brazed	15.88 (5/8) Brazed
	Gas	mm (in.)	28.58(1-1/8) Brazed	28.58(1-1/8) Brazed
Drawing	External		KB94G535	
	Wiring		KE94C140	KE94C140
Standard attachment	Document		Installation Manual	
	Accessory		Refrigerant conn. pipe	
Optional parts			Outdoor Twinning Kit : CMY-Y200VBK2 joint :CMY-Y102S/L-G2,CMY-Y202/302-G2 Header :CMY-Y104/108/1010-G	
Remarks			*Details on foundation work, duct work, insulation work, electrical wiring, power source switch, and other items shall be referred to the Installation Manual. *Due to continuing improvement, above specifications may be subject to change without notice.	

Notes :	*1 Nominal cooling conditions	*2 Nominal cooling conditions	*3 Nominal heating conditions	Unit converter
Indoor :	27degCDB/19degCWB (81degFDB/66degFWB)	27degCDB/19.5degCWB (81degFDB/67degFWB)	20degCDB(68degFDB)	kcal = kW x 860
Outdoor :	35degCDB(95degFDB)	35degCDB(95degFDB)	7degCDB/6degCWB (45degFDB/43degFWB)	Btu/h = kW x 3,412
Pipe length :	7.5m(24-9/16ft)	5m(16-3/8ft)	7.5m(24-9/16ft)	cfm = m^3/min x 35.31
Level difference :	0m(0ft)	0m(0ft)	0m(0ft)	lb = kg/0.4536
*Nominal condition *1,*3 are subject to JIS B8615-1				*Above specification data is subject to rounding variation.
*4 External static pressure option is available (30Pa, 60Pa/3.1mmH_2O, 6.1mmH_2O)				

1. SPECIFICATIONS

Model			PUHY-P800YSHM-A(-BS)
Power source			3-phase 4-wire 380-400-415V 50/60Hz
Cooling capacity (Nominal)	*1	kW	90.0
	*1	kcal / h	77,400
	*1	Btu / h	307,100
	*2	kcal / h	80,000
	Power input	kW	27.69
	Current input	A	46.7-44.4-42.8
	COP (kW / kW)		3.25
Temp. range of cooling	Indoor	W.B.	15 to 24degC (59 to 75degF)
	Outdoor	D.B.	- 5 to 43degC (23 to 109degF)
Heating capacity (Nominal)	*3	kW	100.0
	*3	kcal / h	86,000
	*3	Btu / h	341,200
	Power input	kW	25.70
	Current input	A	43.3-41.2-39.7
	COP (kW / kW)		3.89
Temp. range of heating	Indoor temp.	D.B.	15 to 27degC (59 to 81degF)
	Outdoor temp.	W.B.	-20 to 15.5degC (-4 to 60degF)
Indoor unit connectable	Total capacity		50 - 130% of outdoor unit capacity
	Model / Quantity		P15 - P250/1 - 50
Sound pressure level (measured in anechoic room)		dB <A>	64
Diameter of refrigerant pipe	Liquid	mm (in.)	19.05 (3/4) Brazed
	Gas	mm (in.)	34.93(1-3/8) Brazed

Set Model

Model			PUHY-P350YHM-A(-BS)	PUHY-P450YHM-A(-BS)
External finish			Pre-coated galvanized steel sheets (+powder coating for -BS type)	
			<MUNSELL 5Y 8/1 or similar>	
External dimension H x W x D		mm	1,710(without legs 1,650)x1220x760	1,710(without legs 1,650)x1220x760
		in.	67-3/8(without legs 65)x48-1/16x29-15/16	67-3/8(without legs 65)x48-1/16x29-15/16
Net weight		kg (lb)	245 (541)	245 (541)
Heat exchanger			Salt-resistant cross fin & copper tube	Salt-resistant cross fin & copper tube
Compressor	Type		Inverter scroll hermetic compressor	Inverter scroll hermetic compressor
	Manufacture		MITSUBISHI ELECTRIC CORPORATION	
	Starting method		Inverter	Inverter
	Motor output	kW	10.3	12.0
	Case heater	kW	0.045	0.045
	Lubricant		MEL32	MEL32
FAN	Air flow rate	m^3 / min	225	225
		L / s	3,750	3,750
		cfm	7,945	7,945
	External static press.	*4	0 Pa (0mmH_2O)	0 Pa (0mmH_2O)
	Type x Quantity		Propeller fan x 1	Propeller fan x 1
	Control, Driving mechanism		Inverter-control, Direct-driven by motor	Inverter-control, Direct-driven by motor
	Motor output	kW	0.46 x 1	0.46 x 1
HIC circuit (HIC: Heat Inter-Changer)			Copper pipe,tube-in-tube structure	
Protection	High pressure protection		High pres. Sensor & High pres. Switch at 4.15 MPa (601psi)	
	Inverter circuit (COMP. / FAN)		Over-heat protection, Over-current protection	
	Compressor		Over-heat protection	
	Fan motor		Thermal switch	
Defrosting method			Auto-defrost mode (Reversed refrigerant circle)	
Refrigerant	Type x original charge		R410A x 11.5 kg (26lb)	R410A x 11.5 kg (26lb)
	Control		LEV and HIC circuit	
Pipe between unit distributor	Liquid	mm (in.)	12.7 (1/2) Brazed	15.88 (5/8) Brazed
	Gas	mm (in.)	28.58(1-1/8) Brazed	28.58(1-1/8) Brazed
Drawing	External		KB94G535	
	Wiring		KE94C140	KE94C140
Standard attachment	Document		Installation Manual	
	Accessory		Refrigerant conn. pipe	
Optional parts			Outdoor Twinning Kit : CMY-Y200VBK2 joint :CMY-Y102S/L-G2,CMY-Y202/302-G2 Header :CMY-Y104/108/1010-G	
Remarks			*Details on foundation work, duct work, insulation work, electrical wiring, power source switch, and other items shall be referred to the Installation Manual. *Due to continuing improvement, above specifications may be subject to change without notice.	

Notes :	*1 Nominal cooling conditions	*2 Nominal cooling conditions	*3 Nominal heating conditions	Unit converter
Indoor :	27degCDB/19degCWB (81degFDB/66degFWB)	27degCDB/19.5degCWB (81degFDB/67degFWB)	20degCDB(68degFDB)	kcal = kW x 860
Outdoor :	35degCDB(95degFDB)	35degCDB(95degFDB)	7degCDB/6degCWB (45degFDB/43degFWB)	Btu/h = kW x 3,412
Pipe length :	7.5m(24-9/16ft)	5m(16-3/8ft)	7.5m(24-9/16ft)	cfm = m^3/min x 35.31
Level difference :	0m(0ft)	0m(0ft)	0m(0ft)	lb = kg/0.4536
*Nominal condition *1,*3 are subject to JIS B8615-1				*Above specification data is subject to rounding variation.
*4 External static pressure option is available (30Pa, 60Pa/3.1mmH_2O, 6.1mmH_2O)				

1. SPECIFICATIONS

Y

Model			PUHY-P850YSHM-A(-BS)
Power source			3-phase 4-wire 380-400-415V 50/60Hz
Cooling capacity (Nominal)	*1	kW	96.0
	*1	kcal / h	82,600
	*1	Btu / h	327,600
	*2	kcal / h	85,000
	Power input	kW	30.18
	Current input	A	50.9-48.4-46.6
	COP (kW / kW)		3.18
Temp. range of cooling	Indoor	W.B.	15 to 24degC (59 to 75degF)
	Outdoor	D.B.	- 5 to 43degC (23 to 109degF)
Heating capacity (Nominal)	*3	kW	108.0
	*3	kcal / h	92,900
	*3	Btu / h	368,500
	Power input	kW	28.42
	Current input	A	47.9-45.5-43.9
	COP (kW / kW)		3.80
Temp. range of heating	Indoor temp.	D.B.	15 to 27degC (59 to 81degF)
	Outdoor temp.	W.B.	-20 to 15.5degC (-4 to 60degF)
Indoor unit connectable	Total capacity		50 - 130% of outdoor unit capacity
	Model / Quantity		P15 - P250/1 - 50
Sound pressure level (measured in anechoic room)		dB <A>	64.5
Diameter of refrigerant pipe	Liquid	mm (in.)	19.05 (3/4) Brazed
	Gas	mm (in.)	41.28(1-5/8) Brazed

Set Model

Model			PUHY-P400YHM-A(-BS)	PUHY-P450YHM-A(-BS)
External finish			Pre-coated galvanized steel sheets (+powder coating for -BS type)	
			<MUNSELL 5Y 8/1 or similar>	
External dimension H x W x D		mm	1,710(without legs 1,650)x1220x760	1,710(without legs 1,650)x1220x760
		in.	67-3/8(without legs 65)x48-1/16x29-15/16	67-3/8(without legs 65)x48-1/16x29-15/16
Net weight		kg (lb)	245 (541)	245 (541)
Heat exchanger			Salt-resistant cross fin & copper tube	Salt-resistant cross fin & copper tube
Compressor	Type		Inverter scroll hermetic compressor	Inverter scroll hermetic compressor
	Manufacture		MITSUBISHI ELECTRIC CORPORATION	
	Starting method		Inverter	Inverter
	Motor output	kW	10.5	12
	Case heater	kW	0.045	0.045
	Lubricant		MEL32	MEL32
FAN	Air flow rate	m^3 / min	225	225
		L / s	3,750	3,750
		cfm	7,945	7,945
	External static press.	*4	0 Pa (0mmH_2O)	0 Pa (0mmH_2O)
	Type x Quantity		Propeller fan x 1	Propeller fan x 1
	Control, Driving mechanism		Inverter-control, Direct-driven by motor	Inverter-control, Direct-driven by motor
	Motor output	kW	0.46 x 1	0.46 x 1
HIC circuit (HIC: Heat Inter-Changer)			Copper pipe,tube-in-tube structure	
Protection	High pressure protection		High pres. Sensor & High pres. Switch at 4.15 MPa (601psi)	
	Inverter circuit (COMP. / FAN)		Over-heat protection, Over-current protection	
	Compressor		Over-heat protection	
	Fan motor		Thermal switch	
Defrosting method			Auto-defrost mode (Reversed refrigerant circle)	
Refrigerant	Type x original charge		R410A x 11.5 kg (26lb)	R410A x 11.5 kg (26lb)
	Control		LEV and HIC circuit	
Pipe between unit distributor	Liquid	mm (in.)	15.88 (5/8) Brazed	15.88 (5/8) Brazed
	Gas	mm (in.)	28.58(1-1/8) Brazed	28.58(1-1/8) Brazed
Drawing	External		KB94G535	
	Wiring		KE94C140	KE94C140
Standard attachment	Document		Installation Manual	
	Accessory		Refrigerant conn. pipe	
Optional parts			Outdoor Twinning Kit : CMY-Y200VBK2 joint :CMY-Y102S/L-G2,CMY-Y202/302-G2 Header :CMY-Y104/108/1010-G	
Remarks			*Details on foundation work, duct work, insulation work, electrical wiring, power source switch, and other items shall be referred to the Installation Manual. *Due to continuing improvement, above specifications may be subject to change without notice.	

Notes :	*1 Nominal cooling conditions	*2 Nominal cooling conditions	*3 Nominal heating conditions	Unit converter
Indoor :	27degCDB/19degCWB (81degFDB/66degFWB)	27degCDB/19.5degCWB (81degFDB/67degFWB)	20degCDB(68degFDB)	kcal = kW x 860
Outdoor :	35degCDB(95degFDB)	35degCDB(95degFDB)	7degCDB/6degCWB (45degFDB/43degFWB)	Btu/h = kW x 3,412
Pipe length :	7.5m(24-9/16ft)	5m(16-3/8ft)	7.5m(24-9/16ft)	cfm = m^3/min x 35.31
Level difference :	0m(0ft)	0m(0ft)	0m(0ft)	lb = kg/0.4536
*Nominal condition *1,*3 are subject to JIS B8615-1				*Above specification data is subject to rounding variation.
*4 External static pressure option is available (30Pa, 60Pa/3.1mmH_2O, 6.1mmH_2O)				

Model			PUHY-P900YSHM-A(-BS)
Power source			3-phase 4-wire 380-400-415V 50/60Hz
Cooling capacity (Nominal)	*1	kW	101.0
	*1	kcal / h	86,900
	*1	Btu / h	344,600
	*2	kcal / h	90,000
	Power input	kW	33.33
	Current input	A	56.2-53.4-51.5
	COP (kW / kW)		3.03
Temp. range of cooling	Indoor	W.B.	15 to 24degC (59 to 75degF)
	Outdoor	D.B.	- 5 to 43degC (23 to 109degF)
Heating capacity (Nominal)	*3	kW	113.0
	*3	kcal / h	97,200
	*3	Btu / h	385,600
	Power input	kW	30.29
	Current input	A	51.1-48.5-46.8
	COP (kW / kW)		3.73
Temp. range of heating	Indoor temp.	D.B.	15 to 27degC (59 to 81degF)
	Outdoor temp.	W.B.	-20 to 15.5degC (-4 to 60degF)
Indoor unit connectable	Total capacity		50 - 130% of outdoor unit capacity
	Model / Quantity		P15 - P250/1 - 50
Sound pressure level (measured in anechoic room)		dB <A>	65
Diameter of refrigerant pipe	Liquid	mm (in.)	19.05 (3/4) Brazed
	Gas	mm (in.)	41.28(1-5/8) Brazed

Set Model

Model			PUHY-P450YHM-A(-BS)	PUHY-P450YHM-A(-BS)
External finish			Pre-coated galvanized steel sheets (+powder coating for -BS type)	
			<MUNSELL 5Y 8/1 or similar>	
External dimension H x W x D		mm	1,710(without legs 1,650)x1220x760	1,710(without legs 1,650)x1220x760
		in.	67-3/8(without legs 65)x48-1/16x29-15/16	67-3/8(without legs 65)x48-1/16x29-15/16
Net weight		kg (lb)	245 (541)	245 (541)
Heat exchanger			Salt-resistant cross fin & copper tube	Salt-resistant cross fin & copper tube
Compressor	Type		Inverter scroll hermetic compressor	Inverter scroll hermetic compressor
	Manufacture		MITSUBISHI ELECTRIC CORPORATION	
	Starting method		Inverter	Inverter
	Motor output	kW	12.0	12.0
	Case heater	kW	0.045	0.045
	Lubricant		MEL32	MEL32
FAN	Air flow rate	m^3 / min	225	225
		L / s	3,750	3,750
		cfm	7,945	7,945
	External static press.	*4	0 Pa (0mmH_2O)	0 Pa (0mmH_2O)
	Type x Quantity		Propeller fan x 1	Propeller fan x 1
	Control, Driving mechanism		Inverter-control, Direct-driven by motor	Inverter-control, Direct-driven by motor
	Motor output	kW	0.46 x 1	0.46 x 1
HIC circuit (HIC: Heat Inter-Changer)			Copper pipe,tube-in-tube structure	
Protection	High pressure protection		High pres. Sensor & High pres. Switch at 4.15 MPa (601psi)	
	Inverter circuit (COMP. / FAN)		Over-heat protection, Over-current protection	
	Compressor		Over-heat protection	
	Fan motor		Thermal switch	
Defrosting method			Auto-defrost mode (Reversed refrigerant circle)	
Refrigerant	Type x original charge		R410A x 11.5 kg (26lb)	R410A x 11.5 kg (26lb)
	Control		LEV and HIC circuit	
Pipe between unit distributor	Liquid	mm (in.)	15.88 (5/8) Brazed	15.88 (5/8) Brazed
	Gas	mm (in.)	28.58(1-1/8) Brazed	28.58(1-1/8) Brazed
Drawing	External		KB94G535	
	Wiring		KE94C140	KE94C140
Standard attachment	Document		Installation Manual	
	Accessory		Refrigerant conn. pipe	
Optional parts			Outdoor Twinning Kit : CMY-Y200VBK2 joint :CMY-Y102S/L-G2,CMY-Y202/302-G2 Header :CMY-Y104/108/1010-G	
Remarks			*Details on foundation work, duct work, insulation work, electrical wiring, power source switch, and other items shall be referred to the Installation Manual. *Due to continuing improvement, above specifications may be subject to change without notice.	

Notes :	*1 Nominal cooling conditions	*2 Nominal cooling conditions	*3 Nominal heating conditions	Unit converter
Indoor :	27degCDB/19degCWB (81degFDB/66degFWB)	27degCDB/19.5degCWB (81degFDB/67degFWB)	20degCDB(68degFDB)	kcal = kW x 860
Outdoor :	35degCDB(95degFDB)	35degCDB(95degFDB)	7degCDB/6degCWB (45degFDB/43degFWB)	Btu/h = kW x 3,412
Pipe length :	7.5m(24-9/16ft)	5m(16-3/8ft)	7.5m(24-9/16ft)	cfm = m^3/min x 35.31
Level difference :	0m(0ft)	0m(0ft)	0m(0ft)	lb = kg/0.4536
*Nominal condition *1,*3 are subject to JIS B8615-1				*Above specification data is subject to rounding variation.
*4 External static pressure option is available (30Pa, 60Pa/3.1mmH_2O, 6.1mmH_2O)				

Y

Model			PUHY-P950YSHM-A(-BS)
Power source			3-phase 4-wire 380-400-415V 50/60Hz
Cooling capacity (Nominal)	*1	kW	108.0
	*1	kcal / h	92,900
	*1	Btu / h	368,500
	*2	kcal / h	95,000
	Power input	kW	30.68
	Current input	A	51.7-49.2-47.4
	COP (kW / kW)		3.52
Temp. range of cooling	Indoor	W.B.	15 to 24degC (59 to 75degF)
	Outdoor	D.B.	- 5 to 43degC (23 to 109degF)
Heating capacity (Nominal)	*3	kW	119.5
	*3	kcal / h	102,800
	*3	Btu / h	407,700
	Power input	kW	30.02
	Current input	A	50.6-48.1-46.4
	COP (kW / kW)		3.98
Temp. range of heating	Indoor temp.	D.B.	15 to 27degC (59 to 81degF)
	Outdoor temp.	W.B.	-20 to 15.5degC (-4 to 60degF)
Indoor unit connectable	Total capacity		50 - 130% of outdoor unit capacity
	Model / Quantity		P15 - P250/1 - 50
Sound pressure level (measured in anechoic room)		dB <A>	64
Diameter of refrigerant pipe	Liquid	mm (in.)	19.05 (3/4) Brazed
	Gas	mm (in.)	41.28(1-5/8) Brazed

Set Model

Model			PUHY-P250YHM-A(-BS)	PUHY-P300YHM-A(-BS)	PUHY-P400YHM-A(-BS)
External finish			Pre-coated galvanized steel sheets (+powder coating for -BS type) <MUNSELL 5Y 8/1 or similar>		
External dimension H x W x D		mm	1,710(without legs 1,650)x920x760	1,710(without legs 1,650)x920x760	1,710(without legs 1,650)x1220x760
		in.	67-3/8(without legs 65)x36-1/4x29-15/16	67-3/8(without legs 65)x36-1/4x29-15/16	67-3/8(without legs 65)x48-1/16x29-15/16
Net weight		kg (lb)	200 (441)	215 (474)	245 (541)
Heat exchanger			Salt-resistant cross fin & copper tube	Salt-resistant cross fin & copper tube	Salt-resistant cross fin & copper tube
Compressor	Type		Inverter scroll hermetic compressor	Inverter scroll hermetic compressor	Inverter scroll hermetic compressor
	Manufacture		MITSUBISHI ELECTRIC CORPORATION		
	Starting method		Inverter	Inverter	Inverter
	Motor output	kW	6.7	8.2	10.5
	Case heater	kW	0.035	0.045	0.045
	Lubricant		MEL32	MEL32	MEL32
FAN	Air flow rate	m^3 / min	185	185	225
		L / s	3,083	3,083	3,750
		cfm	6,532	6,532	7,945
	External static press.	*4	0 Pa (0mmH_2O)	0 Pa (0mmH_2O)	0 Pa (0mmH_2O)
	Type x Quantity		Propeller fan x 1	Propeller fan x 1	Propeller fan x 1
	Control, Driving mechanism		Inverter-control, Direct-driven by motor	Inverter-control, Direct-driven by motor	Inverter-control, Direct-driven by motor
	Motor output	kW	0.46 x 1	0.46 x 1	0.46 x 1
HIC circuit (HIC: Heat Inter-Changer)			Copper pipe,tube-in-tube structure		
Protection	High pressure protection		High pres. Sensor & High pres. Switch at 4.15 MPa (601psi)		
	Inverter circuit (COMP. / FAN)		Over-heat protection, Over-current protection		
	Compressor		Over-heat protection		
	Fan motor		Thermal switch		
Defrosting method			Auto-defrost mode (Reversed refrigerant circle)		
Refrigerant	Type x original charge		R410A x 9.0 kg (20lb)	R410A x 9.0 kg (20lb)	R410A x 11.5 kg (26lb)
	Control		LEV and HIC circuit		
Pipe between unit distributor	Liquid	mm (in.)	9.52 (3/8) Brazed	12.7 (1/2) Brazed	15.88 (5/8) Brazed
	Gas	mm (in.)	22.2(7/8) Brazed	22.2(7/8) Brazed	28.58(1-1/8) Brazed
Drawing	External		KB94G536		
	Wiring		KE94C140	KE94C140	KE94C140
Standard attachment	Document		Installation Manual		
	Accessory		Refrigerant conn. pipe		
Optional parts			Outdoor Twinning Kit : CMY-Y300VBK2 joint :CMY-Y102S/L-G2,CMY-Y202/302-G2 Header :CMY-Y104/108/1010-G		
Remarks			*Details on foundation work, duct work, insulation work, electrical wiring, power source switch, and other items shall be referred to the Installation Manual. *Due to continuing improvement, above specifications may be subject to change without notice.		

Notes :	*1 Nominal cooling conditions	*2 Nominal cooling conditions	*3 Nominal heating conditions	Unit converter
Indoor :	27degCDB/19degCWB (81degFDB/66degFWB)	27degCDB/19.5degCWB (81degFDB/67degFWB)	20degCDB(68degFDB)	kcal = kW x 860
Outdoor :	35degCDB(95degFDB)	35degCDB(95degFDB)	7degCDB/6degCWB (45degFDB/43degFWB)	Btu/h = kW x 3,412
Pipe length :	7.5m(24-9/16ft)	5m(16-3/8ft)	7.5m(24-9/16ft)	cfm = m^3/min x 35.31
Level difference :	0m(0ft)	0m(0ft)	0m(0ft)	lb = kg/0.4536
*Nominal condition *1,*3 are subject to JIS B8615-1				*Above specification data is subject to rounding variation.
*4 External static pressure option is available (30Pa, 60Pa/3.1mmH_2O, 6.1mmH_2O)				

Model			PUHY-P1000YSHM-A(-BS)
Power source			3-phase 4-wire 380-400-415V 50/60Hz
Cooling capacity (Nominal)	*1	kW	113.0
	*1	kcal / h	97,200
	*1	Btu / h	385,600
	*2	kcal / h	100,000
	Power input	kW	32.47
	Current input	A	54.8-52.0-50.1
	COP (kW / kW)		3.48
Temp. range of cooling	Indoor	W.B.	15 to 24degC (59 to 75degF)
	Outdoor	D.B.	- 5 to 43degC (23 to 109degF)
Heating capacity (Nominal)	*3	kW	127.0
	*3	kcal / h	109,200
	*3	Btu / h	433,300
	Power input	kW	33.15
	Current input	A	55.9-53.1-51.2
	COP (kW / kW)		3.83
Temp. range of heating	Indoor temp.	D.B.	15 to 27degC (59 to 81degF)
	Outdoor temp.	W.B.	-20 to 15.5degC (-4 to 60degF)
Indoor unit connectable	Total capacity		50 - 130% of outdoor unit capacity
	Model / Quantity		P15 - P250/2 - 50
Sound pressure level (measured in anechoic room)		dB <A>	64.5
Diameter of refrigerant pipe	Liquid	mm (in.)	19.05 (3/4) Brazed
	Gas	mm (in.)	41.28(1-5/8) Brazed

Set Model

Model			PUHY-P300YHM-A(-BS)	PUHY-P300YHM-A(-BS)	PUHY-P400YHM-A(-BS)
External finish			Pre-coated galvanized steel sheets (+powder coating for -BS type) <MUNSELL 5Y 8/1 or similar>		
External dimension H x W x D		mm	1,710(without legs 1,650)x920x760	1,710(without legs 1,650)x920x760	1,710(without legs 1,650)x1220x760
		in.	67-3/8(without legs 65)x36-1/4x29-15/16	67-3/8(without legs 65)x36-1/4x29-15/16	67-3/8(without legs 65)x48-1/16x29-15/16
Net weight		kg (lb)	215 (474)	215 (474)	245 (541)
Heat exchanger			Salt-resistant cross fin & copper tube	Salt-resistant cross fin & copper tube	Salt-resistant cross fin & copper tube
Compressor	Type		Inverter scroll hermetic compressor	Inverter scroll hermetic compressor	Inverter scroll hermetic compressor
	Manufacture		MITSUBISHI ELECTRIC CORPORATION		
	Starting method		Inverter	Inverter	Inverter
	Motor output	kW	8.2	8.2	10.5
	Case heater	kW	0.045	0.045	0.045
	Lubricant		MEL32	MEL32	MEL32
FAN	Air flow rate	m^3 / min	185	185	225
		L / s	3,083	3,083	3,750
		cfm	6,532	6,532	7,945
	External static press.	*4	0 Pa (0mmH_2O)	0 Pa (0mmH_2O)	0 Pa (0mmH_2O)
	Type x Quantity		Propeller fan x 1	Propeller fan x 1	Propeller fan x 1
	Control, Driving mechanism		Inverter-control, Direct-driven by motor	Inverter-control, Direct-driven by motor	Inverter-control, Direct-driven by motor
	Motor output	kW	0.46 x 1	0.46 x 1	0.46 x 1
HIC circuit (HIC: Heat Inter-Changer)			Copper pipe,tube-in-tube structure		
Protection	High pressure protection		High pres. Sensor & High pres. Switch at 4.15 MPa (601psi)		
	Inverter circuit (COMP. / FAN)		Over-heat protection, Over-current protection		
	Compressor		Over-heat protection		
	Fan motor		Thermal switch		
Defrosting method			Auto-defrost mode (Reversed refrigerant circle)		
Refrigerant	Type x original charge		R410A x 9.0 kg (20lb)	R410A x 9.0 kg (20lb)	R410A x 11.5 kg (26lb)
	Control		LEV and HIC circuit		
Pipe between unit distributor	Liquid	mm (in.)	12.7 (1/2) Brazed	12.7 (1/2) Brazed	15.88 (5/8) Brazed
	Gas	mm (in.)	22.2(7/8) Brazed	22.2(7/8) Brazed	28.58(1-1/8) Brazed
Drawing	External		KB94G536		
	Wiring		KE94C140	KE94C140	KE94C140
Standard attachment	Document		Installation Manual		
	Accessory		Refrigerant conn. pipe		
Optional parts			Outdoor Twinning Kit : CMY-Y300VBK2 joint :CMY-Y102S/L-G2,CMY-Y202/302-G2 Header :CMY-Y104/108/1010-G		
Remarks			*Details on foundation work, duct work, insulation work, electrical wiring, power source switch, and other items shall be referred to the Installation Manual. *Due to continuing improvement, above specifications may be subject to change without notice.		

Notes :	*1 Nominal cooling conditions	*2 Nominal cooling conditions	*3 Nominal heating conditions	Unit converter
Indoor :	27degCDB/19degCWB (81degFDB/66degFWB)	27degCDB/19.5degCWB (81degFDB/67degFWB)	20degCDB(68degFDB)	kcal = kW x 860
Outdoor :	35degCDB(95degFDB)	35degCDB(95degFDB)	7degCDB/6degCWB (45degFDB/43degFWB)	Btu/h = kW x 3,412
Pipe length :	7.5m(24-9/16ft)	5m(16-3/8ft)	7.5m(24-9/16ft)	cfm = m^3/min x 35.31
Level difference :	0m(0ft)	0m(0ft)	0m(0ft)	lb = kg/0.4536
*Nominal condition *1,*3 are subject to JIS B8615-1				*Above specification data is subject to rounding variation.
*4 External static pressure option is available (30Pa, 60Pa/3.1mmH_2O, 6.1mmH_2O)				

Y

Model			PUHY-P1050YSHM-A(-BS)
Power source			3-phase 4-wire 380-400-415V 50/60Hz
Cooling capacity (Nominal)	*1	kW	118.0
	*1	kcal / h	101,500
	*1	Btu / h	402,600
	*2	kcal / h	105,000
	Power input	kW	33.90
	Current input	A	57.2-54.3-52.4
	COP (kW / kW)		3.48
Temp. range of cooling	Indoor	W.B.	15 to 24degC (59 to 75degF)
	Outdoor	D.B.	- 5 to 43degC (23 to 109degF)
Heating capacity (Nominal)	*3	kW	132.0
	*3	kcal / h	113,500
	*3	Btu / h	450,400
	Power input	kW	35.01
	Current input	A	59.1-56.1-54.1
	COP (kW / kW)		3.77
Temp. range of heating	Indoor temp.	D.B.	15 to 27degC (59 to 81degF)
	Outdoor temp.	W.B.	-20 to 15.5degC (-4 to 60degF)
Indoor unit connectable	Total capacity		50 - 130% of outdoor unit capacity
	Model / Quantity		P15 - P250/2 - 50
Sound pressure level (measured in anechoic room)		dB <A>	65
Diameter of refrigerant pipe	Liquid	mm (in.)	19.05 (3/4) Brazed
	Gas	mm (in.)	41.28(1-5/8) Brazed

Set Model

Model			PUHY-P300YHM-A(-BS)	PUHY-P350YHM-A(-BS)	PUHY-P400YHM-A(-BS)
External finish			Pre-coated galvanized steel sheets (+powder coating for -BS type) <MUNSELL 5Y 8/1 or similar>		
External dimension H x W x D		mm	1,710(without legs 1,650)x920x760	1,710(without legs 1,650)x1220x760	1,710(without legs 1,650)x1220x760
		in.	67-3/8(without legs 65)x36-1/4x29-15/16	67-3/8(without legs 65)x48-1/16x29-15/16	67-3/8(without legs 65)x48-1/16x29-15/16
Net weight		kg (lb)	215 (474)	245 (541)	245 (541)
Heat exchanger			Salt-resistant cross fin & copper tube	Salt-resistant cross fin & copper tube	Salt-resistant cross fin & copper tube
Compressor	Type		Inverter scroll hermetic compressor	Inverter scroll hermetic compressor	Inverter scroll hermetic compressor
	Manufacture		MITSUBISHI ELECTRIC CORPORATION		
	Starting method		Inverter	Inverter	Inverter
	Motor output	kW	8.2	10.3	10.5
	Case heater	kW	0.045	0.045	0.045
	Lubricant		MEL32	MEL32	MEL32
FAN	Air flow rate	m^3 / min	185	225	225
		L / s	3,083	3,750	3,750
		cfm	6,532	7,945	7,945
	External static press.	*4	0 Pa (0mmH_2O)	0 Pa (0mmH_2O)	0 Pa (0mmH_2O)
	Type x Quantity		Propeller fan x 1	Propeller fan x 1	Propeller fan x 1
	Control, Driving mechanism		Inverter-control, Direct-driven by motor	Inverter-control, Direct-driven by motor	Inverter-control, Direct-driven by motor
	Motor output	kW	0.46 x 1	0.46 x 1	0.46 x 1
HIC circuit (HIC: Heat Inter-Changer)			Copper pipe,tube-in-tube structure		
Protection	High pressure protection		High pres. Sensor & High pres. Switch at 4.15 MPa (601psi)		
	Inverter circuit (COMP. / FAN)		Over-heat protection, Over-current protection		
	Compressor		Over-heat protection		
	Fan motor		Thermal switch		
Defrosting method			Auto-defrost mode (Reversed refrigerant circle)		
Refrigerant	Type x original charge		R410A x 9.0 kg (20lb)	R410A x 11.5 kg (26lb)	R410A x 11.5 kg (26lb)
	Control		LEV and HIC circuit		
Pipe between unit distributor	Liquid	mm (in.)	12.7 (1/2) Brazed	12.7 (1/2) Brazed	15.88 (5/8) Brazed
	Gas	mm (in.)	22.2(7/8) Brazed	28.58(1-1/8) Brazed	28.58(1-1/8) Brazed
Drawing	External		KB94G537		
	Wiring		KE94C140	KE94C140	KE94C140
Standard attachment	Document		Installation Manual		
	Accessory		Refrigerant conn. pipe		
Optional parts			Outdoor Twinning Kit : CMY-Y300VBK2 joint :CMY-Y102S/L-G2,CMY-Y202/302-G2 Header :CMY-Y104/108/1010-G		
Remarks			*Details on foundation work, duct work, insulation work, electrical wiring, power source switch, and other items shall be referred to the Installation Manual. *Due to continuing improvement, above specifications may be subject to change without notice.		

Notes :	*1 Nominal cooling conditions	*2 Nominal cooling conditions	*3 Nominal heating conditions	Unit converter
Indoor :	27degCDB/19degCWB (81degFDB/66degFWB)	27degCDB/19.5degCWB (81degFDB/67degFWB)	20degCDB(68degFDB)	kcal = kW x 860
Outdoor :	35degCDB(95degFDB)	35degCDB(95degFDB)	7degCDB/6degCWB (45degFDB/43degFWB)	Btu/h = kW x 3,412
Pipe length :	7.5m(24-9/16ft)	5m(16-3/8ft)	7.5m(24-9/16ft)	cfm = m^3/min x 35.31
Level difference :	0m(0ft)	0m(0ft)	0m(0ft)	lb = kg/0.4536
*Nominal condition *1,*3 are subject to JIS B8615-1				*Above specification data is subject to rounding variation.
*4 External static pressure option is available (30Pa, 60Pa/3.1mmH_2O, 6.1mmH_2O)				

1. SPECIFICATIONS

Model			PUHY-P1100YSHM-A(-BS)
Power source			3-phase 4-wire 380-400-415V 50/60Hz
Cooling capacity (Nominal)	*1	kW	124.0
	*1	kcal / h	106,600
	*1	Btu / h	423,100
	*2	kcal / h	110,000
	Power input	kW	35.83
	Current input	A	60.4-57.4-55.3
	COP (kW / kW)		3.46
Temp. range of cooling	Indoor	W.B.	15 to 24degC (59 to 75degF)
	Outdoor	D.B.	- 5 to 43degC (23 to 109degF)
Heating capacity (Nominal)	*3	kW	140.0
	*3	kcal / h	120,400
	*3	Btu / h	477,700
	Power input	kW	36.93
	Current input	A	62.3-59.2-57.0
	COP (kW / kW)		3.79
Temp. range of heating	Indoor temp.	D.B.	15 to 27degC (59 to 81degF)
	Outdoor temp.	W.B.	-20 to 15.5degC (-4 to 60degF)
Indoor unit connectable	Total capacity		50 - 130% of outdoor unit capacity
	Model / Quantity		P15 - P250/2 - 50
Sound pressure level (measured in anechoic room)		dB <A>	65
Diameter of refrigerant pipe	Liquid	mm (in.)	19.05 (3/4) Brazed
	Gas	mm (in.)	41.28(1-5/8) Brazed

Set Model

Model			PUHY-P350YHM-A(-BS)	PUHY-P350YHM-A(-BS)	PUHY-P400YHM-A(-BS)
External finish			Pre-coated galvanized steel sheets (+powder coating for -BS type) <MUNSELL 5Y 8/1 or similar>		
External dimension H x W x D		mm	1,710(without legs 1,650)x1220x760	1,710(without legs 1,650)x1220x760	1,710(without legs 1,650)x1220x760
		in.	67-3/8(without legs 65)x48-1/16x29-15/16	67-3/8(without legs 65)x48-1/16x29-15/16	67-3/8(without legs 65)x48-1/16x29-15/16
Net weight		kg (lb)	245 (541)	245 (541)	245 (541)
Heat exchanger			Salt-resistant cross fin & copper tube	Salt-resistant cross fin & copper tube	Salt-resistant cross fin & copper tube
Compressor	Type		Inverter scroll hermetic compressor	Inverter scroll hermetic compressor	Inverter scroll hermetic compressor
	Manufacture		MITSUBISHI ELECTRIC CORPORATION		
	Starting method		Inverter	Inverter	Inverter
	Motor output	kW	10.3	10.3	10.5
	Case heater	kW	0.045	0.045	0.045
	Lubricant		MEL32	MEL32	MEL32
FAN	Air flow rate	m^3 / min	225	225	225
		L / s	3,750	3,750	3,750
		cfm	7,945	7,945	7,945
	External static press.	*4	0 Pa (0mmH_2O)	0 Pa (0mmH_2O)	0 Pa (0mmH_2O)
	Type x Quantity		Propeller fan x 1	Propeller fan x 1	Propeller fan x 1
	Control, Driving mechanism		Inverter-control, Direct-driven by motor	Inverter-control, Direct-driven by motor	Inverter-control, Direct-driven by motor
	Motor output	kW	0.46 x 1	0.46 x 1	0.46 x 1
HIC circuit (HIC: Heat Inter-Changer)			Copper pipe,tube-in-tube structure		
Protection	High pressure protection		High pres. Sensor & High pres. Switch at 4.15 MPa (601psi)		
	Inverter circuit (COMP. / FAN)		Over-heat protection, Over-current protection		
	Compressor		Over-heat protection		
	Fan motor		Thermal switch		
Defrosting method			Auto-defrost mode (Reversed refrigerant circle)		
Refrigerant	Type x original charge		R410A x 11.5 kg (26lb)	R410A x 11.5 kg (26lb)	R410A x 11.5 kg (26lb)
	Control		LEV and HIC circuit		
Pipe between unit distributor	Liquid	mm (in.)	12.7 (1/2) Brazed	12.7 (1/2) Brazed	15.88 (5/8) Brazed
	Gas	mm (in.)	28.58(1-1/8) Brazed	28.58(1-1/8) Brazed	28.58(1-1/8) Brazed
Drawing	External		KB94G538		
	Wiring		KE94C140	KE94C140	KE94C140
Standard attachment	Document		Installation Manual		
	Accessory		Refrigerant conn. pipe		
Optional parts			Outdoor Twinning Kit : CMY-Y300VBK2 joint :CMY-Y102S/L-G2,CMY-Y202/302-G2 Header :CMY-Y104/108/1010-G		
Remarks			*Details on foundation work, duct work, insulation work, electrical wiring, power source switch, and other items shall be referred to the Installation Manual. *Due to continuing improvement, above specifications may be subject to change without notice.		

Notes :	*1 Nominal cooling conditions	*2 Nominal cooling conditions	*3 Nominal heating conditions	Unit converter
Indoor :	27degCDB/19degCWB (81degFDB/66degFWB)	27degCDB/19.5degCWB (81degFDB/67degFWB)	20degCDB(68degFDB)	kcal = kW x 860
Outdoor :	35degCDB(95degFDB)	35degCDB(95degFDB)	7degCDB/6degCWB (45degFDB/43degFWB)	Btu/h = kW x 3,412
Pipe length :	7.5m(24-9/16ft)	5m(16-3/8ft)	7.5m(24-9/16ft)	cfm = m^3/min x 35.31
Level difference :	0m(0ft)	0m(0ft)	0m(0ft)	lb = kg/0.4536
*Nominal condition *1,*3 are subject to JIS B8615-1				*Above specification data is subject to rounding variation.
*4 External static pressure option is available (30Pa, 60Pa/3.1mmH_2O, 6.1mmH_2O)				

Y

Model			PUHY-P1150YSHM-A(-BS)
Power source			3-phase 4-wire to 380-400-415V 50/60Hz
Cooling capacity (Nominal)	*1	kW	130.0
	*1	kcal / h	111,800
	*1	Btu / h	443,600
	*2	kcal / h	115,000
	Power input	kW	39.39
	Current input	A	66.4-63.1-60.8
	COP (kW / kW)		3.30
Temp. range of cooling	Indoor	W.B.	15 to 24degC (59 to 75degF)
	Outdoor	D.B.	- 5 to 43degC (23 to 109degF)
Heating capacity (Nominal)	*3	kW	145.0
	*3	kcal / h	124,700
	*3	Btu / h	494,700
	Power input	kW	39.08
	Current input	A	65.9-62.6-60.4
	COP (kW / kW)		3.71
Temp. range of heating	Indoor temp.	D.B.	15 to 27degC (59 to 81degF)
	Outdoor temp.	W.B.	-20 to 15.5degC (-4 to 60degF)
Indoor unit connectable	Total capacity		50 - 130% of outdoor unit capacity
	Model / Quantity		P15 - P250/2 - 50
Sound pressure level (measured in anechoic room)		dB <A>	65.5
Diameter of refrigerant pipe	Liquid	mm (in.)	19.05 (3/4) Brazed
	Gas	mm (in.)	41.28(1-5/8) Brazed

Set Model

Model			PUHY-P350YHM-A(-BS)	PUHY-P350YHM-A(-BS)	PUHY-P450YHM-A(-BS)
External finish			Pre-coated galvanized steel sheets (+powder coating for -BS type) <MUNSELL 5Y 8/1 or similar>		
External dimension H x W x D		mm	1,710(without legs 1,650)x1220x760	1,710(without legs 1,650)x1220x760	1,710(without legs 1,650)x1220x760
		in.	67-3/8(without legs 65)x48-1/16x29-15/16	67-3/8(without legs 65)x48-1/16x29-15/16	67-3/8(without legs 65)x48-1/16x29-15/16
Net weight		kg (lb)	245 (541)	245 (541)	245 (541)
Heat exchanger			Salt-resistant cross fin & copper tube	Salt-resistant cross fin & copper tube	Salt-resistant cross fin & copper tube
Compressor	Type		Inverter scroll hermetic compressor	Inverter scroll hermetic compressor	Inverter scroll hermetic compressor
	Manufacture		MITSUBISHI ELECTRIC CORPORATION		
	Starting method		Inverter	Inverter	Inverter
	Motor output	kW	10.3	10.3	12.0
	Case heater	kW	0.045	0.045	0.045
	Lubricant		MEL32	MEL32	MEL32
FAN	Air flow rate	m^3 / min	225	225	225
		L / s	3,750	3,750	3,750
		cfm	7,945	7,945	7,945
	External static press.	*4.	0 Pa (0mmH_2O)	0 Pa (0mmH_2O)	0 Pa (0mmH_2O)
	Type x Quantity		Propeller fan x 1	Propeller fan x 1	Propeller fan x 1
	Control, Driving mechanism		Inverter-control, Direct-driven by motor	Inverter-control, Direct-driven by motor	Inverter-control, Direct-driven by motor
	Motor output	kW	0.46 x 1	0.46 x 1	0.46 x 1
HIC circuit (HIC: Heat Inter-Changer)			Copper pipe,tube-in-tube structure		
Protection	High pressure protection		High pres. Sensor & High pres. Switch at 4.15 MPa (601psi)		
	Inverter circuit (COMP. / FAN)		Over-heat protection, Over-current protection		
	Compressor		Over-heat protection		
	Fan motor		Thermal switch		
Defrosting method			Auto-defrost mode (Reversed refrigerant circle)		
Refrigerant	Type x original charge		R410A x 11.5 kg to (26lb)	R410A x 11.5 kg to (26lb)	R410A x 11.5 kg to (26lb)
	Control		LEV and HIC circuit		
Pipe between unit distributor	Liquid	mm (in.)	12.7 (1/2) Brazed	12.7 (1/2) Brazed	15.88 (5/8) Brazed
	Gas	mm (in.)	28.58(1-1/8) Brazed	28.58(1-1/8) Brazed	28.58(1-1/8) Brazed
Drawing	External		KB94G538		
	Wiring		KE94C140	KE94C140	KE94C140
Standard attachment	Document		Installation Manual		
	Accessory		Refrigerant conn. to pipe		
Optional parts			Outdoor Twinning Kit : CMY-Y300VBK2 joint :CMY-Y102S/L-G2,CMY-Y202/302-G2 Header :CMY-Y104/108/1010-G		
Remarks			*Details on foundation work, duct work, insulation work, electrical wiring, power source switch, and other items shall be referred to the Installation Manual. *Due to continuing improvement, above specifications may be subject to change without notice.		

Notes :	*1 Nominal cooling conditions	*2 Nominal cooling conditions	*3 Nominal heating conditions	Unit converter
Indoor :	27degCDB/19degCWB (81degFDB/66degFWB)	27degCDB/19.5degCWB (81degFDB/67degFWB)	20degCDB(68degFDB)	kcal = kW x 860
Outdoor :	35degCDB(95degFDB)	35degCDB(95degFDB)	7degCDB/6degCWB (45degFDB/43degFWB)	Btu/h = kW x 3,412
Pipe length :	7.5m(24-9/16ft)	5m(16-3/8ft)	7.5m(24-9/16ft)	cfm = m^3/min x 35.31
Level difference :	0m(0ft)	0m(0ft)	0m(0ft)	lb = kg/0.4536
*Nominal condition *1,*3 are subject to JIS B8615-1				*Above specification data is subject to rounding variation.
*4 External static pressure option is available (30Pa, 60Pa/3.1mmH_2O, 6.1mmH_2O)				

Model			PUHY-P1200YSHM-A(-BS)
Power source			3-phase 4-wire 380-400-415V 50/60Hz
Cooling capacity (Nominal)	*1	kW	136.0
	*1	kcal / h	117,000
	*1	Btu / h	464,000
	*2	kcal / h	120,000
	Power input	kW	41.71
	Current input	A	70.4-66.8-64.4
	COP (kW / kW)		3.26
Temp. range of cooling	Indoor	W.B.	15 to 24degC (59 to 75degF)
	Outdoor	D.B.	- 5 to 43degC (23 to 109degF)
Heating capacity (Nominal)	*3	kW	150.0
	*3	kcal / h	129,000
	*3	Btu / h	511,800
	Power input	kW	40.10
	Current input	A	67.6-64.3-61.9
	COP (kW / kW)		3.74
Temp. range of heating	Indoor temp.	D.B.	15 to 27degC (59 to 81degF)
	Outdoor temp.	W.B.	-20 to 15.5degC (-4 to 60degF)
Indoor unit connectable	Total capacity		50 - 130% of outdoor unit capacity
	Model / Quantity		P15 - P250/2 - 50
Sound pressure level (measured in anechoic room)		dB <A>	66
Diameter of refrigerant pipe	Liquid	mm (in.)	19.05 (3/4) Brazed
	Gas	mm (in.)	41.28(1-5/8) Brazed

Set Model

Model			PUHY-P350YHM-A(-BS)	PUHY-P400YHM-A(-BS)	PUHY-P450YHM-A(-BS)
External finish			Pre-coated galvanized steel sheets (+powder coating for -BS type) <MUNSELL 5Y 8/1 or similar>		
External dimension H x W x D		mm	1,710(without legs 1,650)x1220x760	1,710(without legs 1,650)x1220x760	1,710(without legs 1,650)x1220x760
		in.	67-3/8(without legs 65)x48-1/16x29-15/16	67-3/8(without legs 65)x48-1/16x29-15/16	67-3/8(without legs 65)x48-1/16x29-15/16
Net weight		kg (lb)	245 (541)	245 (541)	245 (541)
Heat exchanger			Salt-resistant cross fin & copper tube	Salt-resistant cross fin & copper tube	Salt-resistant cross fin & copper tube
Compressor	Type		Inverter scroll hermetic compressor	Inverter scroll hermetic compressor	Inverter scroll hermetic compressor
	Manufacture		MITSUBISHI ELECTRIC CORPORATION		
	Starting method		Inverter	Inverter	Inverter
	Motor output	kW	10.3	10.5	12.0
	Case heater	kW	0.045	0.045	0.045
	Lubricant		MEL32	MEL32	MEL32
FAN	Air flow rate	m^3 / min	225	225	225
		L / s	3,750	3,750	3,750
		cfm	7,945	7,945	7,945
	External static press.	*4	0 Pa (0mmH_2O)	0 Pa (0mmH_2O)	0 Pa (0mmH_2O)
	Type x Quantity		Propeller fan x 1	Propeller fan x 1	Propeller fan x 1
	Control, Driving mechanism		Inverter-control, Direct-driven by motor	Inverter-control, Direct-driven by motor	Inverter-control, Direct-driven by motor
	Motor output	kW	0.46 x 1	0.46 x 1	0.46 x 1
HIC circuit (HIC: Heat Inter-Changer)			Copper pipe,tube-in-tube structure		
Protection	High pressure protection		High pres. Sensor & High pres. Switch at 4.15 MPa (601psi)		
	Inverter circuit (COMP. / FAN)		Over-heat protection, Over-current protection		
	Compressor		Over-heat protection		
	Fan motor		Thermal switch		
Defrosting method			Auto-defrost mode (Reversed refrigerant circle)		
Refrigerant	Type x original charge		R410A x 11.5 kg (26lb)	R410A x 11.5 kg (26lb)	R410A x 11.5 kg (26lb)
	Control		LEV and HIC circuit		
Pipe between unit distributor	Liquid	mm (in.)	12.7 (1/2) Brazed	15.88 (5/8) Brazed	15.88 (5/8) Brazed
	Gas	mm (in.)	28.58(1-1/8) Brazed	28.58(1-1/8) Brazed	28.58(1-1/8) Brazed
Drawing	External		KB94G538		
	Wiring		KE94C140	KE94C140	KE94C140
Standard attachment	Document		Installation Manual		
	Accessory		Refrigerant conn. pipe		
Optional parts			Outdoor Twinning Kit : CMY-Y300VBK2 joint :CMY-Y102S/L-G2,CMY-Y202/302-G2 Header :CMY-Y104/108/1010-G		
Remarks			*Details on foundation work, duct work, insulation work, electrical wiring, power source switch, and other items shall be referred to the Installation Manual. *Due to continuing improvement, above specifications may be subject to change without notice.		

Notes :	*1 Nominal cooling conditions	*2 Nominal cooling conditions	*3 Nominal heating conditions	Unit converter
Indoor :	27degCDB/19degCWB (81degFDB/66degFWB)	27degCDB/19.5degCWB (81degFDB/67degFWB)	20degCDB(68degFDB)	kcal = kW x 860
Outdoor :	35degCDB(95degFDB)	35degCDB(95degFDB)	7degCDB/6degCWB (45degFDB/43degFWB)	Btu/h = kW x 3,412
Pipe length :	7.5m(24-9/16ft)	5m(16-3/8ft)	7.5m(24-9/16ft)	cfm = m^3/min x 35.31
Level difference :	0m(0ft)	0m(0ft)	0m(0ft)	lb = kg/0.4536
*Nominal condition *1,*3 are subject to JIS B8615-1				*Above specification data is subject to rounding variation.
*4 External static pressure option is available (30Pa, 60Pa/3.1mmH_2O, 6.1mmH_2O)				

Y

Model			PUHY-P1250YSHM-A(-BS)
Power source			3-phase 4-wire 380-400-415V 50/60Hz
Cooling capacity (Nominal)	*1	kW	140.0
	*1	kcal / h	120,400
	*1	Btu / h	477,700
	*2	kcal / h	125,000
	Power input	kW	45.01
	Current input	A	75.9-72.1-69.5
	COP (kW / kW)		3.11
Temp. range of cooling	Indoor	W.B.	15 to 24degC (59 to 75degF)
	Outdoor	D.B.	- 5 to 43degC (23 to 109degF)
Heating capacity (Nominal)	*3	kW	156.5
	*3	kcal / h	134,600
	*3	Btu / h	534,000
	Power input	kW	42.06
	Current input	A	71.0-67.4-65.0
	COP (kW / kW)		3.72
Temp. range of heating	Indoor temp.	D.B.	15 to 27degC (59 to 81degF)
	Outdoor temp.	W.B.	-20 to 15.5degC (-4 to 60degF)
Indoor unit connectable	Total capacity		50 - 130% of outdoor unit capacity
	Model / Quantity		P15 - P250/2 - 50
Sound pressure level (measured in anechoic room)		dB <A>	66
Diameter of refrigerant pipe	Liquid	mm (in.)	19.05 (3/4) Brazed
	Gas	mm (in.)	41.28(1-5/8) Brazed

Set Model

Model			PUHY-P350YHM-A(-BS)	PUHY-P450YHM-A(-BS)	PUHY-P450YHM-A(-BS)
External finish			Pre-coated galvanized steel sheets (+powder coating for -BS type) <MUNSELL 5Y 8/1 or similar>		
External dimension H x W x D		mm	1,710(without legs 1,650)x1220x760	1,710(without legs 1,650)x1220x760	1,710(without legs 1,650)x1220x760
		in.	67-3/8(without legs 65)x48-1/16x29-15/16	67-3/8(without legs 65)x48-1/16x29-15/16	67-3/8(without legs 65)x48-1/16x29-15/16
Net weight		kg (lb)	245 (541)	245 (541)	245 (541)
Heat exchanger			Salt-resistant cross fin & copper tube	Salt-resistant cross fin & copper tube	Salt-resistant cross fin & copper tube
Compressor	Type		Inverter scroll hermetic compressor	Inverter scroll hermetic compressor	Inverter scroll hermetic compressor
	Manufacture		MITSUBISHI ELECTRIC CORPORATION		
	Starting method		Inverter	Inverter	Inverter
	Motor output	kW	10.3	12.0	12.0
	Case heater	kW	0.045	0.045	0.045
	Lubricant		MEL32	MEL32	MEL32
FAN	Air flow rate	m^3 / min	225	225	225
		L / s	3,750	3,750	3,750
		cfm	7,945	7,945	7,945
	External static press.	*4	0 Pa (0mmH_2O)	0 Pa (0mmH_2O)	0 Pa (0mmH_2O)
	Type x Quantity		Propeller fan x 1	Propeller fan x 1	Propeller fan x 1
	Control, Driving mechanism		Inverter-control, Direct-driven by motor	Inverter-control, Direct-driven by motor	Inverter-control, Direct-driven by motor
	Motor output	kW	0.46 x 1	0.46 x 1	0.46 x 1
HIC circuit (HIC: Heat Inter-Changer)			Copper pipe,tube-in-tube structure		
Protection	High pressure protection		High pres. Sensor & High pres. Switch at 4.15 MPa (601psi)		
	Inverter circuit (COMP. / FAN)		Over-heat protection, Over-current protection		
	Compressor		Over-heat protection		
	Fan motor		Thermal switch		
Defrosting method			Auto-defrost mode (Reversed refrigerant circle)		
Refrigerant	Type x original charge		R410A x 11.5 kg (26lb)	R410A x 11.5 kg (26lb)	R410A x 11.5 kg (26lb)
	Control		LEV and HIC circuit		
Pipe between unit distributor	Liquid	mm (in.)	12.7 (1/2) Brazed	15.88 (5/8) Brazed	15.88 (5/8) Brazed
	Gas	mm (in.)	28.58(1-1/8) Brazed	28.58(1-1/8) Brazed	28.58(1-1/8) Brazed
Drawing	External		KB94G538		
	Wiring		KE94C140	KE94C140	KE94C140
Standard attachment	Document		Installation Manual		
	Accessory		Refrigerant conn. pipe		
Optional parts			Outdoor Twinning Kit : CMY-Y300VBK2 joint :CMY-Y102S/L-G2,CMY-Y202/302-G2 Header :CMY-Y104/108/1010-G		
Remarks			*Details on foundation work, duct work, insulation work, electrical wiring, power source switch, and other items shall be referred to the Installation Manual. *Due to continuing improvement, above specifications may be subject to change without notice.		

Notes :	*1 Nominal cooling conditions	*2 Nominal cooling conditions	*3 Nominal heating conditions	Unit converter
Indoor :	27degCDB/19degCWB (81degFDB/66degFWB)	27degCDB/19.5degCWB (81degFDB/67degFWB)	20degCDB(68degFDB)	kcal = kW x 860
Outdoor :	35degCDB(95degFDB)	35degCDB(95degFDB)	7degCDB/6degCWB (45degFDB/43degFWB)	Btu/h = kW x 3,412
Pipe length :	7.5m(24-9/16ft)	5m(16-3/8ft)	7.5m(24-9/16ft)	cfm = m^3/min x 35.31
Level difference :	0m(0ft)	0m(0ft)	0m(0ft)	lb = kg/0.4536
*Nominal condition *1,*3 are subject to JIS B8615-1				*Above specification data is subject to rounding variation.
*4 External static pressure option is available (30Pa, 60Pa/3.1mmH_2O, 6.1mmH_2O)				

PUHY-P200,250,300YHM-A(-BS)

Unit : mm

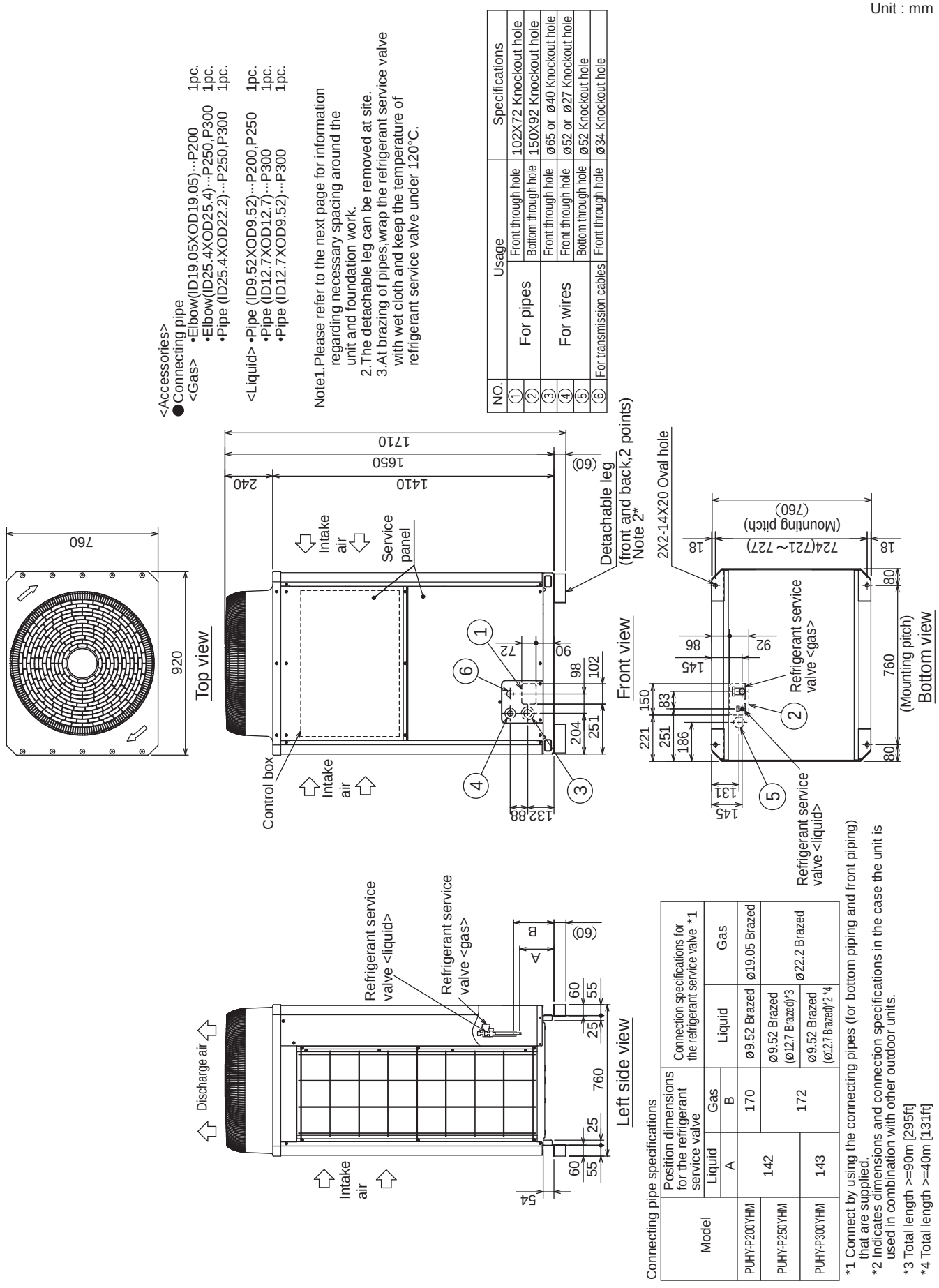

<Accessories>
●Connecting pipe
<Gas> •Elbow(ID19.05XOD19.05)···P200 1pc.
•Elbow(ID25.4XOD25.4)···P250,P300 1pc.
•Pipe (ID25.4XOD22.2)···P250,P300 1pc.
<Liquid> •Pipe (ID9.52XOD9.52)···P200,P250 1pc.
•Pipe (ID12.7XOD12.7)···P300 1pc.
•Pipe (ID12.7XOD9.52)···P300 1pc.

Note1.Please refer to the next page for information regarding necessary spacing around the unit and foundation work.
2.The detachable leg can be removed at site.
3.At brazing of pipes,wrap the refrigerant service valve with wet cloth and keep the temperature of refrigerant service valve under 120°C.

NO.	Usage		Specifications
①	For pipes	Front through hole	102X72 Knockout hole
②		Bottom through hole	150X92 Knockout hole
③	For wires	Front through hole	ø65 or ø40 Knockout hole
④		Front through hole	ø52 or ø27 Knockout hole
⑤		Bottom through hole	ø52 Knockout hole
⑥	For transmission cables	Front through hole	ø34 Knockout hole

Connecting pipe specifications

Model	Position dimensions for the refrigerant service valve		Connection specifications for the refrigerant service valve *1	
	Liquid A	Gas B	Liquid	Gas
PUHY-P200YHM	142	170	ø9.52 Brazed	ø19.05 Brazed
PUHY-P250YHM		172	ø9.52 Brazed (ø12.7 Brazed)*3	ø22.2 Brazed
PUHY-P300YHM	143		ø9.52 Brazed (ø12.7 Brazed)*2 *4	

*1 Connect by using the connecting pipes (for bottom piping and front piping) that are supplied.
*2 Indicates dimensions and connection specifications in the case the unit is used in combination with other outdoor units.
*3 Total length >=90m [295ft]
*4 Total length >=40m [131ft]

Y

PUHY-P200,250,300YHM-A(-BS)

Ref. : PUHY_YHM-A_EXD_EUDB_P200-P300_Y2
Unit : mm

1.Required space around the unit

●In case of single installation

① Secure enough space around the unit as shown in the figure below.

•With a space of at least 300mm to the wall on the back of the unit

•With a space of at least 100mm to the wall on the back of the unit

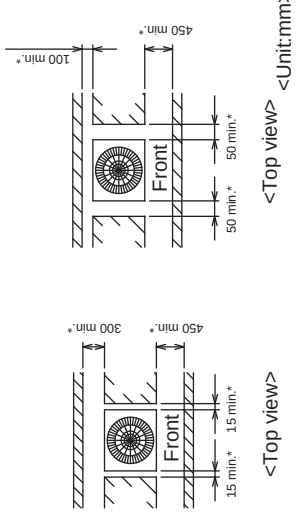

<Top view> <Top view> <Unit:mm>

② When the height of the walls on the front,back or on the sides<H> exceeds the wall height limit as defined below add the height that exceeds the height limit <h> to the figures that are marked with an asterisk.

<Wall height limit> Front :Up to the unit height
Back :Up to 500mm from the unit bottom
Side :Up to the unit height

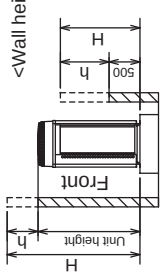

<Side view>

●In case of collective installation

① When multiple units are installed adjacent to each other, secure enough space to allow for air circulation and walkway between groups of units as shown in the figures below.
② At least two sides must be left open.
③ As with the single installation, add the height that exceeds the height limit<h> to the figures that are marked with an asterisk.

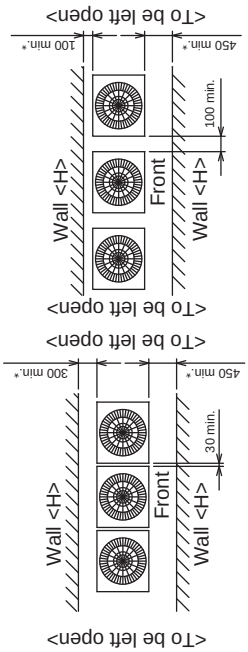

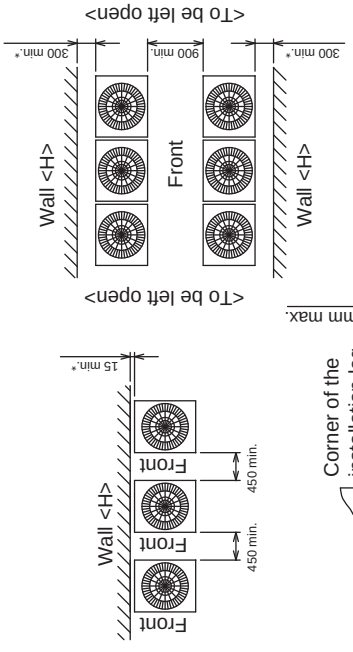

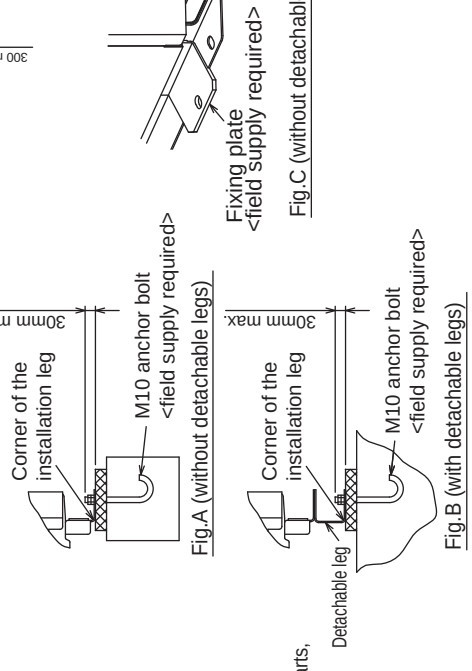

2.Foundation work

① Take into consideration the surface strength,water drainage route, piping route,and wiring route when preparing the installation site.
<Note that the drain water comes out of the unit during operation.>
② Build the foundation in such way that the corner of the installation leg is securely supported as shown in the right figure.(Fig.A,B)
When using a rubber isolating cushion, please ensure it is large enough to cover the entire width of each of the unit's legs.
③ The protrusion length of the anchor bolt must not exceed 30mm.(Fig.A,B)
④ Use four fixing plates as shown in the right figure <field supply required> when using post-installed anchor bolts.(Fig.C,D)
⑤ To prevent small animals and water from entering the unit and damaging its parts, close the gap around the edges of through holes for pipes and wires with filler plates <field supply required>.
⑥ When the pipes or cables are routed at the bottom of the unit, make sure that the through hole at the base of the unit does not get blocked with the installation base.
⑦ Refer to the Installation Manual when installing units on an installation base.

PUHY-P350,400,450YHM-A(-BS)

Ref. : PUHY_YHM-A_EXD_EUDB_P350-P450_Y1

Unit : mm

<Accessories>
● Connecting pipe
<Gas> •Elbow(ID25.4XOD25.4)····P350,P400,P450 1pc.
•Pipe (ID25.4XOD28.58)····P350,P400,P450 1pc.
<Liquid> •Pipe (ID15.88XOD15.88)···P350,P400,P450 1pc.
•Pipe (ID15.88XOD12.7)····P350,P400 1pc.

Note1.Please refer to the next page for information regarding necessary spacing around the unit and foundation work.
2.The detachable leg can be removed at site.
3.At brazing of pipes,wrap the refrigerant service valve with wet cloth and keep the temperature of refrigerant service valve under 120°C.

NO.	Usage		Specifications
①	For pipes	Front through hole	102X72 Knockout hole
②		Bottom through hole	150X94 Knockout hole
③	For wires	Front through hole	ø65 or ø40 Knockout hole
④		Front through hole	ø52 or ø27 Knockout hole
⑤		Bottom through hole	ø65 Knockout hole
⑥	For transmission cables	Front through hole	ø34 Knockout hole

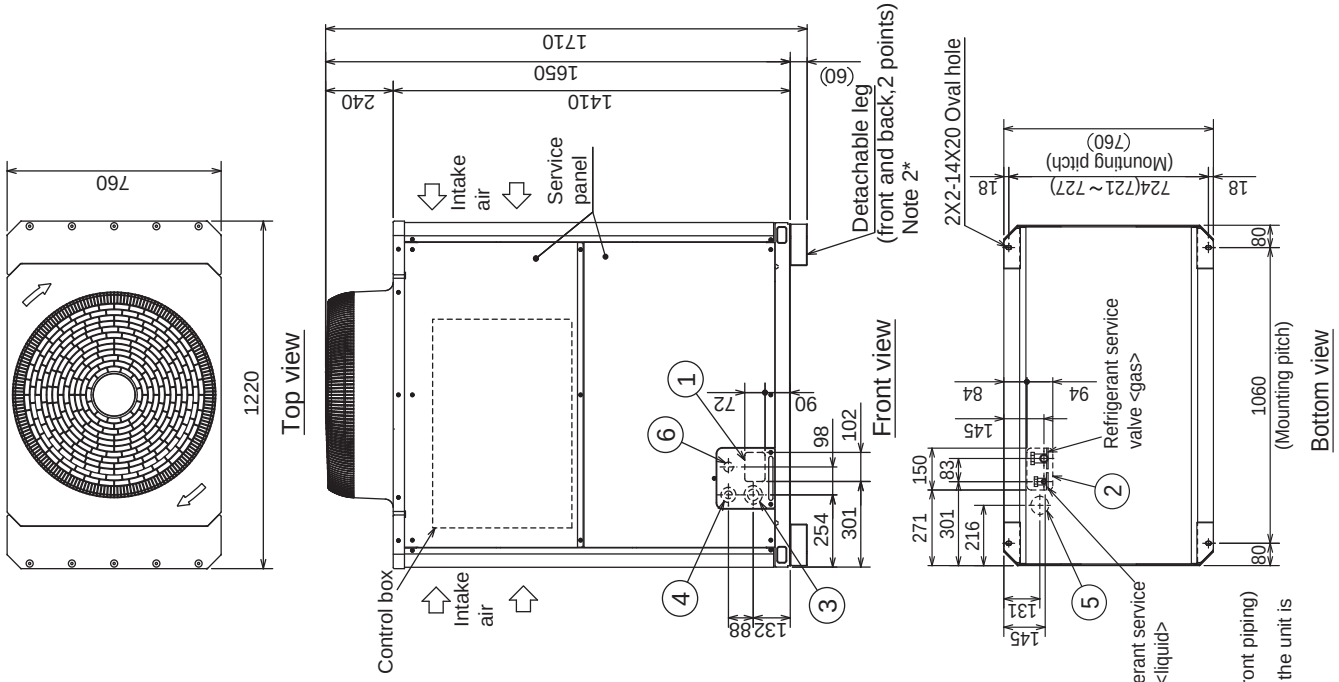

Connecting pipe specifications

Model	Position dimensions for the refrigerant service valve		Connection specifications for the refrigerant service valve *1	
	Liquid A	Gas B	Liquid	Gas
PUHY-P350YHM	158	172	ø12.7 Brazed	ø28.58 Brazed
PUHY-P400YHM			ø12.7 Brazed (ø15.88 Brazed) *2	
PUHY-P450YHM			ø15.88 Brazed	

*1 Connect by using the connecting pipes (for bottom piping and front piping) that are supplied.
*2 Indicates dimensions and connection specifications in the case the unit is used in combination with other outdoor units.

Y

PUHY-P350,400,450YHM-A(-BS)

Ref. : PUHY_YHM-A_EXD_EUDB_P350-P450_Y2
Unit : mm

1.Required space around the unit

●In case of single installation

① Secure enough space around the unit as shown in the figure below.

- With a space of at least 300mm to the wall on the back of the unit
- With a space of at least 100mm to the wall on the back of the unit

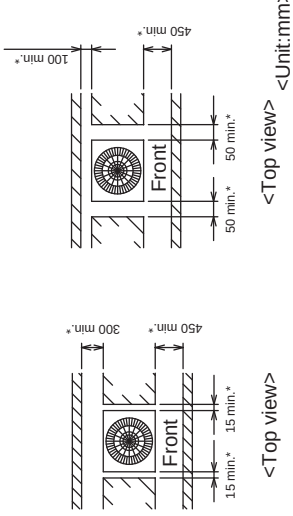

<Unit:mm>

② When the height of the walls on the front,back or on the sides<H> exceeds the wall height limit as defined below add the height that exceeds the height limit <h> to the figures that are marked with an asterisk.

<Wall height limit> Front : Up to the unit height
Back : Up to 500mm from the unit bottom
Side : Up to the unit height

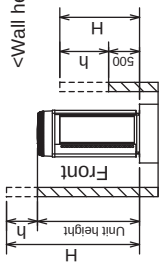

●In case of collective installation

① When multiple units are installed adjacent to each other, secure enough space to allow for air circulation and walkway between groups of units as shown in the figures below.
② At least two sides must be left open.
③ As with the single installation, add the height that exceeds the height limit<h> to the figures that are marked with an asterisk.

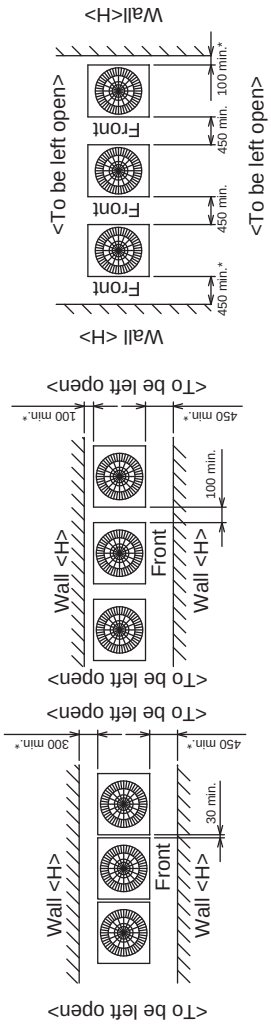

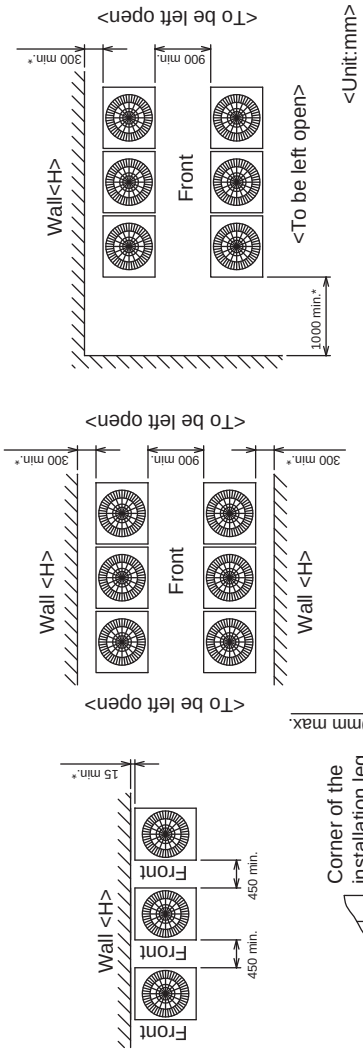

<Unit:mm>

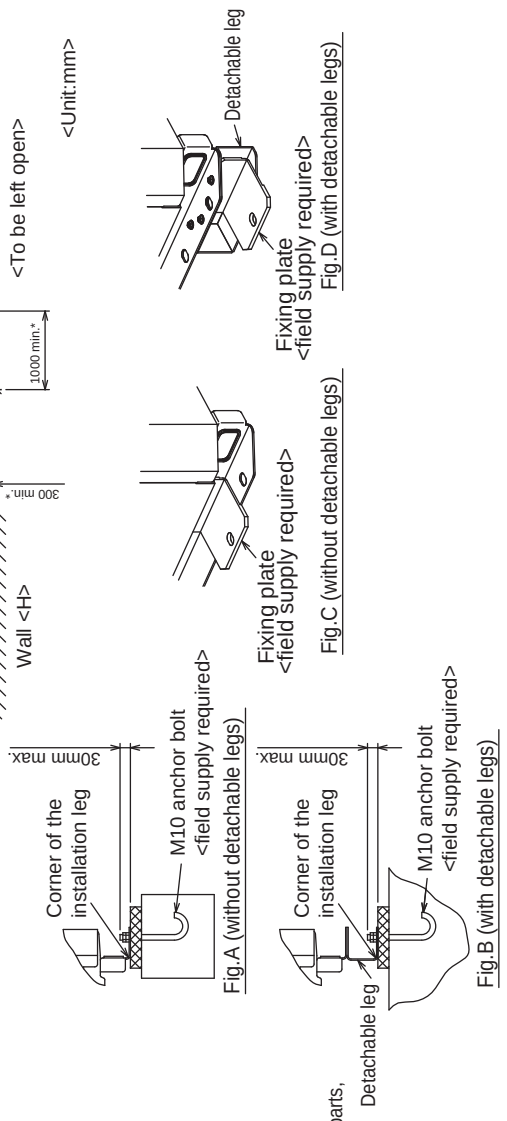

2.Foundation work

① Take into consideration the surface strength,water drainage route, piping route,and wiring route when preparing the installation site.
<Note that the drain water comes out of the unit during operation.>
② Build the foundation in such way that the corner of the installation leg is securely supported as shown in the right figure.(Fig.A,B)
When using a rubber isolating cushion, please ensure it is large enough to cover the entire width of each of the unit's legs.
③ The protrusion length of the anchor bolt must not exceed 30mm.(Fig.A,B)
④ Use four fixing plates as shown in the right figure <field supply required> when using post-installed anchor bolts.(Fig.C,D)
⑤ To prevent small animals and water from entering the unit and damaging its parts, close the gap around the edges of through holes for pipes and wires with filler plates <field supply required>.
⑥ When the pipes or cables are routed at the bottom of the unit, make sure that the through hole at the base of the unit does not get blocked with the installation base.
⑦ Refer to the Installation Manual when installing units on an installation base.

PUHY-P500,550YSHM-A(-BS)

Ref. : PUHY_YHM-A_EXD_EUDB_P500-P550
Unit : mm

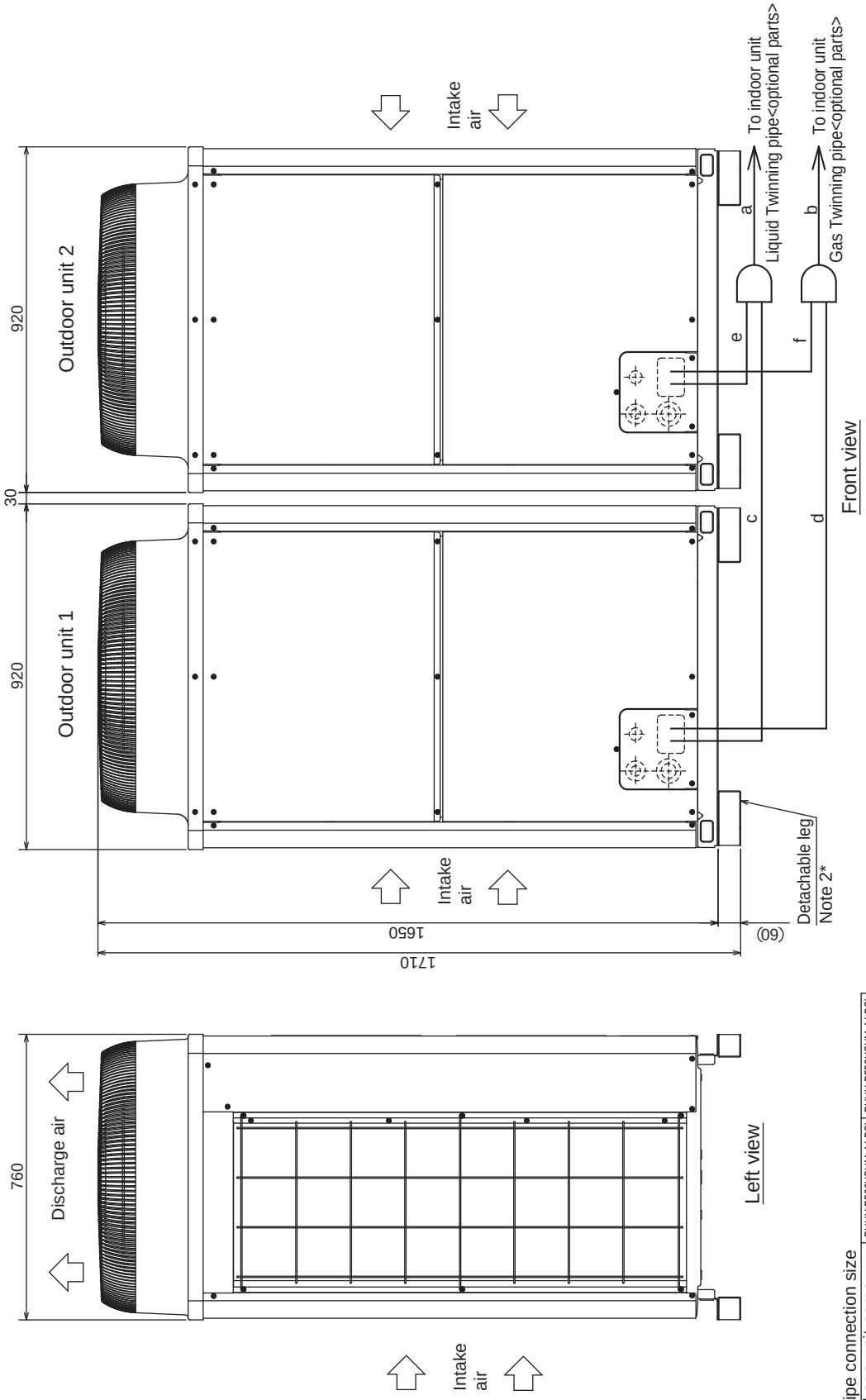

	Unit model	Liquid	Gas
Twinning pipe ~ Outdoor unit		c or e	d or f
	P250	ø9.52	ø22.2
	P300	ø12.7	ø22.2

Twinning pipe connection size

Package unit name			PUHY-P500YSHM-A(-BS)	PUHY-P550YSHM-A(-BS)
Component unit name	Outdoor unit 1		PUHY-P250YHM-A(-BS)	PUHY-P300YHM-A(-BS)
	Outdoor unit 2		PUHY-P250YHM-A(-BS)	PUHY-P250YHM-A(-BS)
Outdoor Twinning Kit(optional parts)			CMY-Y100VBK2	
Indoor unit~ Twinning pipe	Liquid	a	ø15.88	
	Gas	b	ø28.58	

Note 1.Connect the pipes as shown in the figure above. Refer to the table above for the pipe size.
2.The detachable leg can be removed at site.
3.Twinning pipes should not be tilted more than 15 degrees from the ground.See the Installation Manual for details.

Y

PUHY-P600,650YSHM-A(-BS)

Ref. : PUHY_YHM-A_EXD_EUDB_P600-P650
Unit : mm

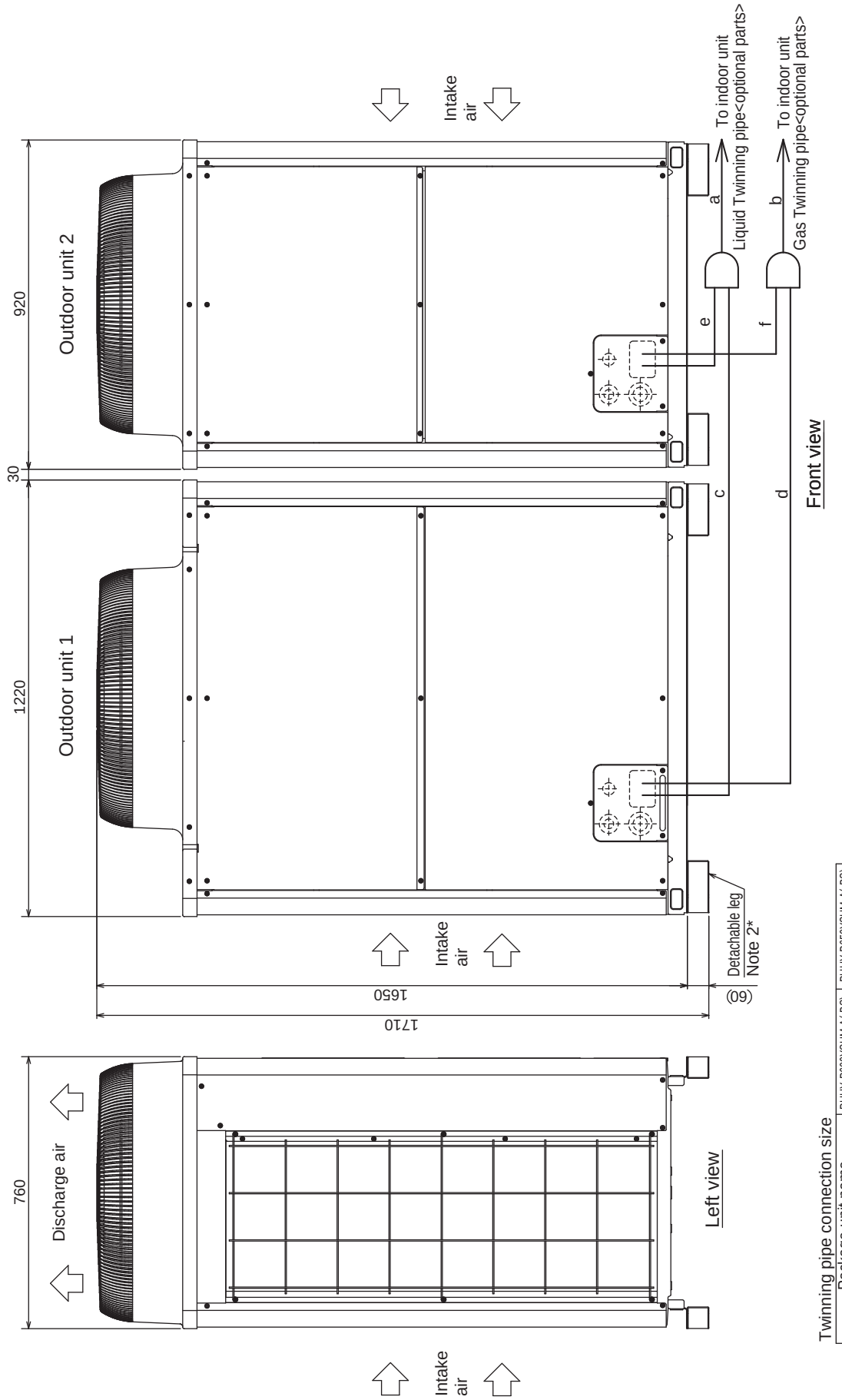

	Unit model	Liquid c or e	Gas d or f
Twinning pipe ~ Outdoor unit	P250	ø9.52	ø22.2
	P300	ø12.7	ø22.2
	P350	ø12.7	ø28.58

Twinning pipe connection size

Package unit name		PUHY-P600YSHM-A(-BS)	PUHY-P650YSHM-A(-BS)
Component unit name	Outdoor unit 1	PUHY-P350YHM-A(-BS)	PUHY-P350YHM-A(-BS)
	Outdoor unit 2	PUHY-P250YHM-A(-BS)	PUHY-P300YHM-A(-BS)
Outdoor Twinning Kit(optional parts)		CMY-Y100VBK2	
Indoor unit~Twinning pipe	Liquid a	ø15.88	
	Gas b	ø28.58	

Note 1.Connect the pipes as shown in the figure above. Refer to the table above for the pipe size.
2.The detachable leg can be removed at site.
3.Twinning pipes should not be tilted more than 15 degrees from the ground.See the Installation Manual for details.

PUHY-P700,750,800,850,900YSHM-A(-BS)

Ref. : PUHY_YHM-A_EXD_EUDB_P700-P900
Unit : mm

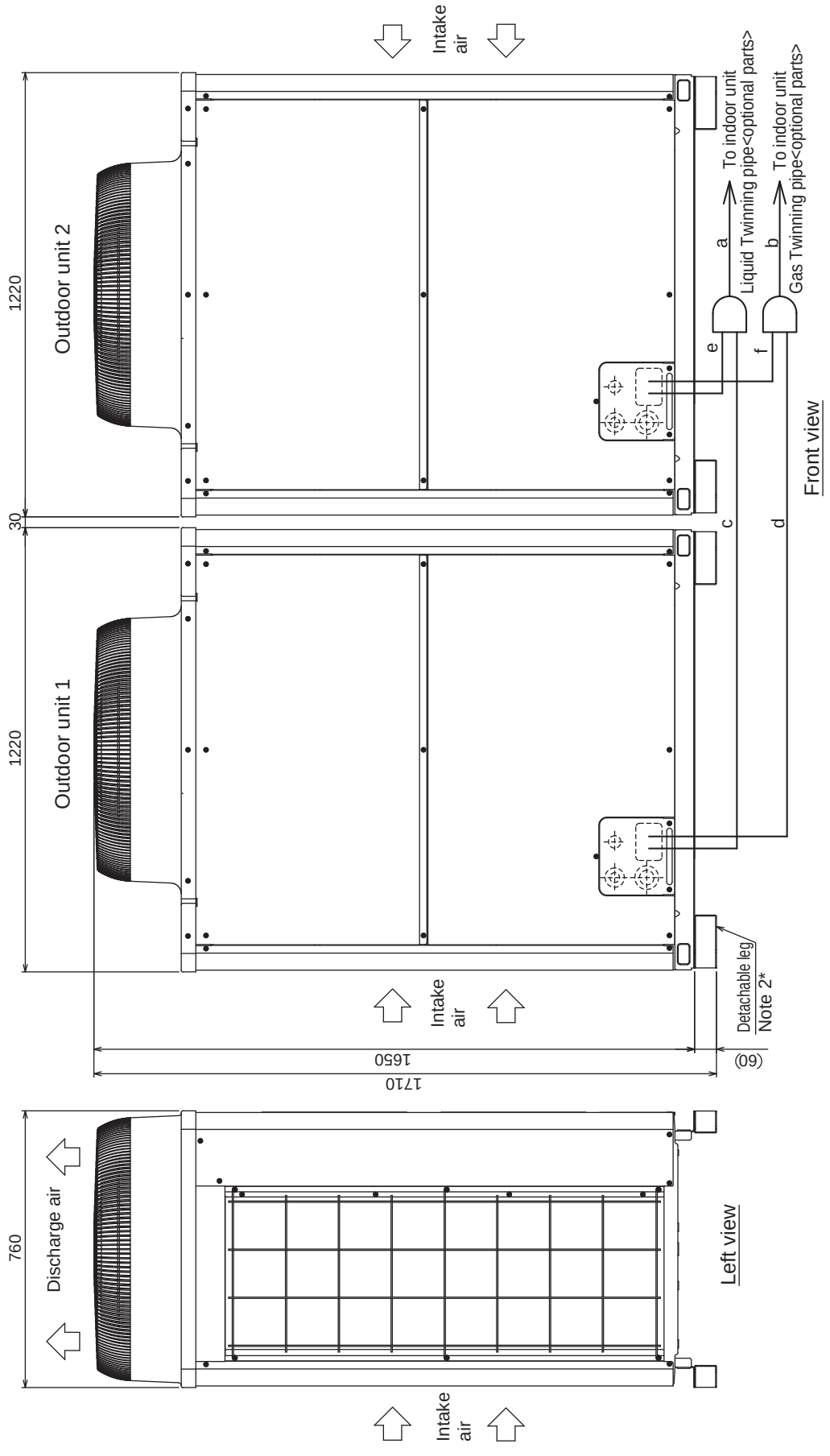

	Unit model	Liquid	Gas
Twinning pipe ~ Outdoor unit		c or e	d or f
	P350	ø12.7	ø28.58
	P400	ø15.88	ø28.58
	P450	ø15.88	ø28.58

Twinning pipe connection size

Package unit name		PUHY-P700YSHM-A(-BS)	PUHY-P750YSHM-A(-BS)	PUHY-P800YSHM-A(-BS)	PUHY-P850YSHM-A(-BS)	PUHY-P900YSHM-A(-BS)
Component unit name	Outdoor unit 1	PUHY-P350YHM-A(-BS)	PUHY-P400YHM-A(-BS)	PUHY-P450YHM-A(-BS)	PUHY-P450YHM-A(-BS)	PUHY-P450YHM-A(-BS)
	Outdoor unit 2	PUHY-P350YHM-A(-BS)	PUHY-P350YHM-A(-BS)	PUHY-P350YHM-A(-BS)	PUHY-P400YHM-A(-BS)	PUHY-P450YHM-A(-BS)
Outdoor Twinning Kit(optional parts)		CMY-Y200VBK2				
Indoor unit~ Twinning pipe	Liquid a	ø19.05				
	Gas b	ø34.93			ø41.28	

Note 1.Connect the pipes as shown in the figure above. Refer to the table above for the pipe size.
2.The detachable leg can be removed at site.
3.Twinning pipes should not be tilted more than 15 degrees from the ground.See the Installation Manual for details.

PUHY-P950,1000YSHM-A(-BS)

Ref. : PUHY_YHM-A_EXD_EUDB_P950-P1000
Unit : mm

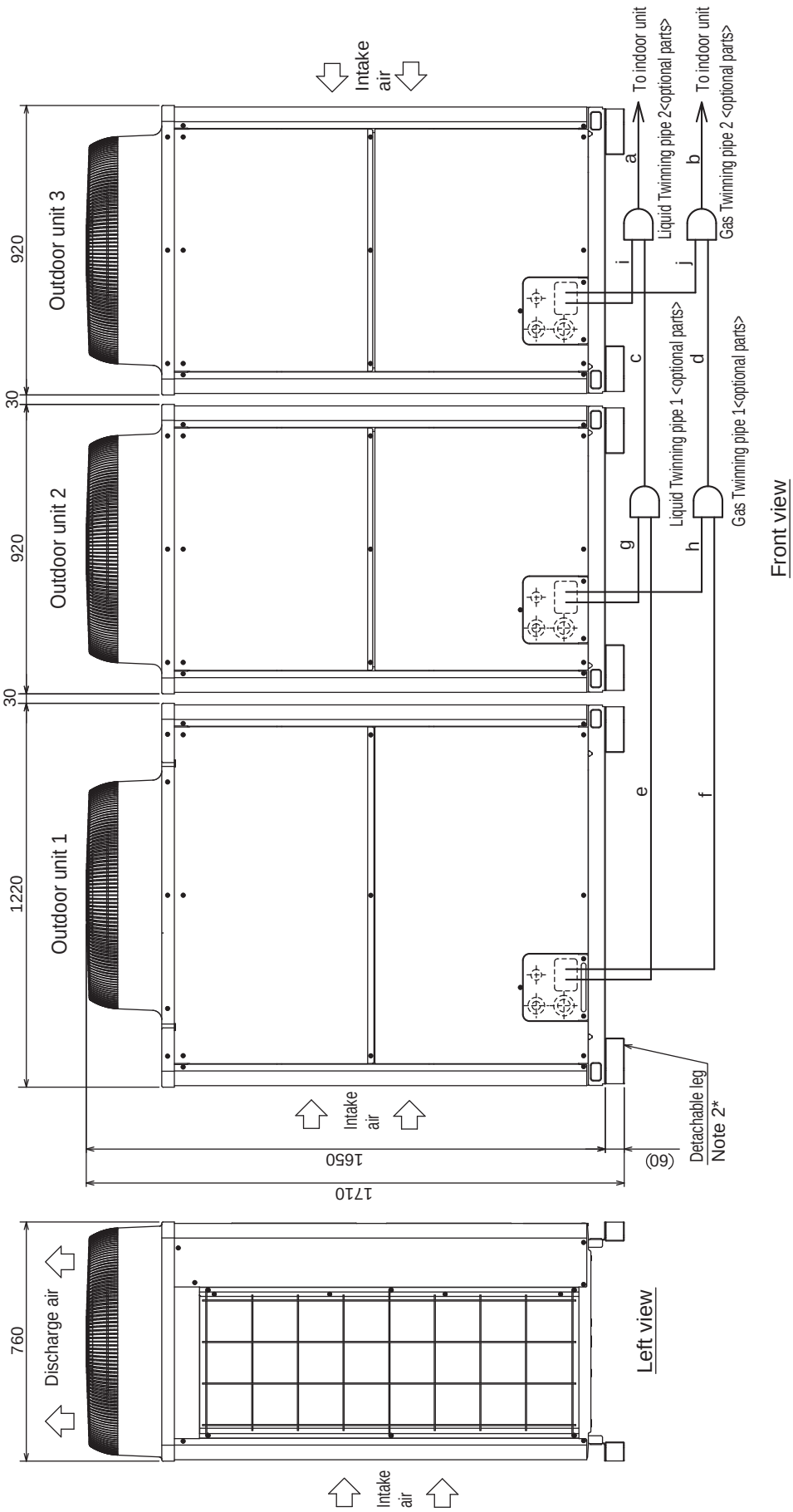

	Unit model	Liquid	Gas
		e or g or i	f or h or j
Twinning pipe ~ Outdoor unit	P250	ø9.52	ø22.2
	P300	ø12.7	ø22.2
	P400	ø15.88	ø28.58

Twinning pipe connection size

Package unit name			PUHY-P950YSHM-A(-BS)	PUHY-P1000YSHM-A(-BS)
Component unit name	Outdoor unit 1		PUHY-P400YHM-A(-BS)	PUHY-P400YHM-A(-BS)
	Outdoor unit 2		PUHY-P300YHM-A(-BS)	PUHY-P300YHM-A(-BS)
	Outdoor unit 3		PUHY-P250YHM-A(-BS)	PUHY-P300YHM-A(-BS)
Outdoor Twinning Kit(optional parts)			CMY-Y300VBK2	
Indoor unit ~ Twinning pipe 2	Liquid	a	ø19.05	
	Gas	b	ø41.28	
Twinning pipe 1 ~ Twinning pipe 2	Liquid	c	ø19.05	
	Gas	d	ø34.93	

Note 1. Connect the pipes as shown in the figure above. Refer to the table above for the pipe size.
2. The detachable leg can be removed at site.
3. Twinning pipes should not be tilted more than 15 degrees from the ground. See the Installation Manual for details.

PUHY-P1050YSHM-A(-BS)

Ref. : PUHY_YHM-A_EXD_EUDB_P1050
Unit : mm

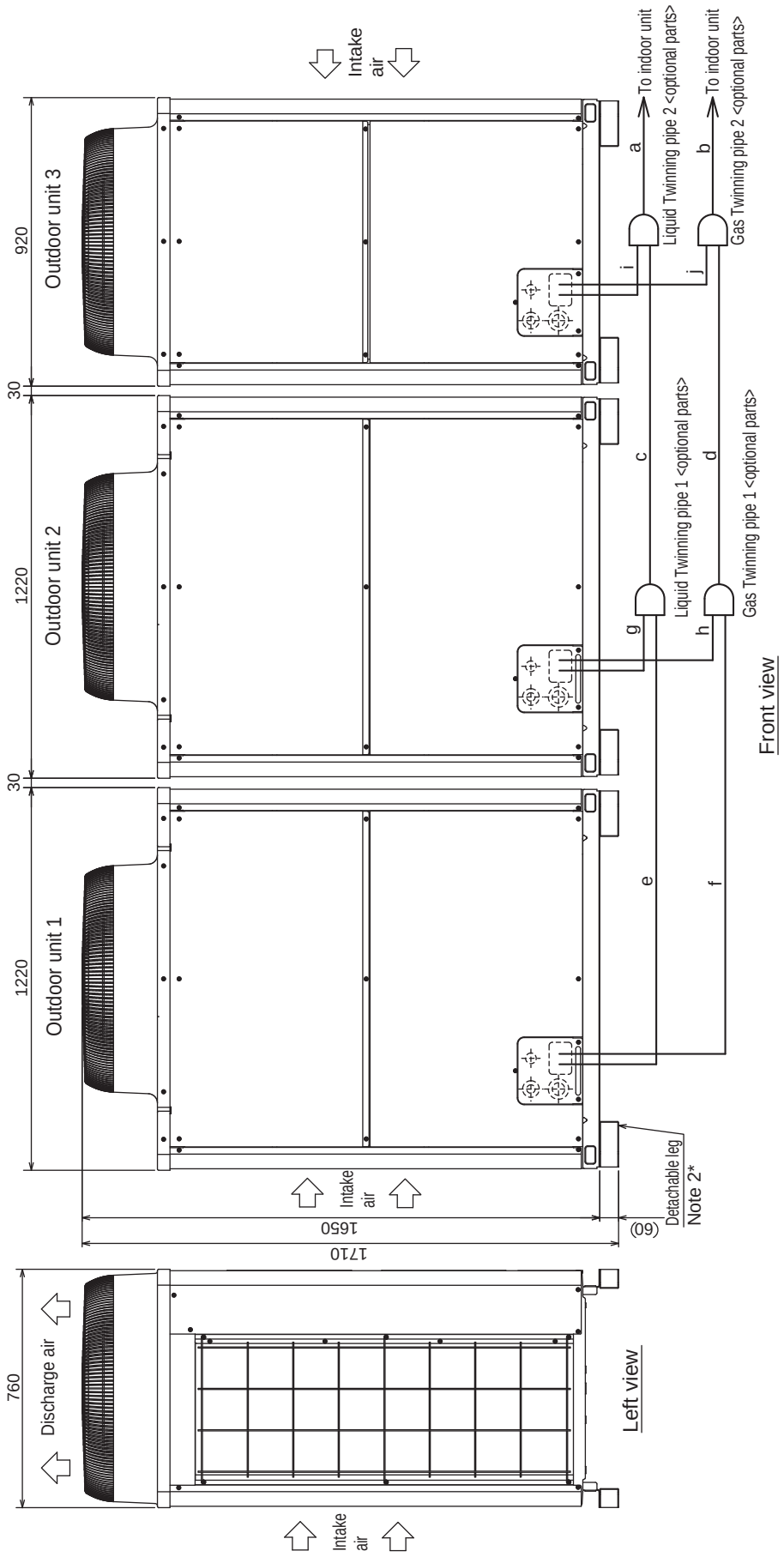

	Unit model	Liquid	Gas
Twinning pipe ~ Outdoor unit		e or g or i	f or h or j
	P300	ø12.7	ø22.2
	P350	ø12.7	ø28.58
	P400	ø15.88	ø28.58

Twinning pipe connection size

Package unit name			PUHY-P1050YSHM-A(-BS)
Component unit name	Outdoor unit 1		PUHY-P400YHM-A(-BS)
	Outdoor unit 2		PUHY-P350YHM-A(-BS)
	Outdoor unit 3		PUHY-P300YHM-A(-BS)
Outdoor Twinning Kit(optional parts)			CMY-Y300VBK2
Indoor unit~ Twinning pipe 2	Liquid	a	ø19.05
	Gas	b	ø41.28
Twinning pipe 1~ Twinning pipe 2	Liquid	c	ø19.05
	Gas	d	ø34.93

Note 1.Connect the pipes as shown in the figure above. Refer to the table above for the pipe size.
2.The detachable leg can be removed at site.
3.Twinning pipes should not be tilted more than 15 degrees from the ground.See the Installation Manual for details.

Y

PUHY-P1100,1150,1200,1250YSHM-A(-BS)

Ref. : PUHY_YHM-A_EXD_EUDB_P1100-P1250
Unit : mm

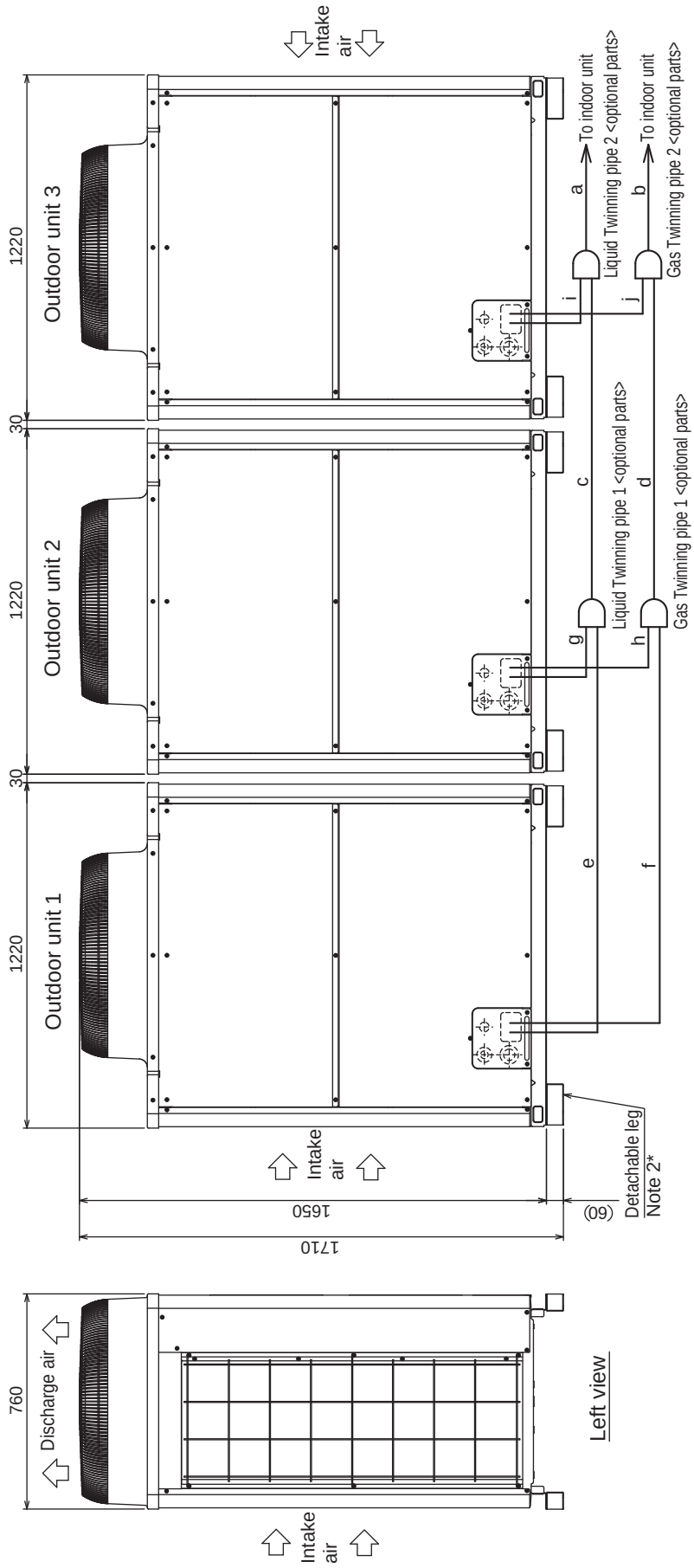

	Unit model	Liquid	Gas
Twinning pipe ~ Outdoor unit		e or g or i	f or h or j
	P350	ø12.7	ø28.58
	P400	ø15.88	ø28.58
	P450	ø15.88	ø28.58

Twinning pipe connection size

Package unit name			PUHY-P1100YSHM-A(-BS)	PUHY-P1150YSHM-A(-BS)	PUHY-P1200YSHM-A(-BS)	PUHY-P1250YSHM-A(-BS)
Component unit name	Outdoor unit 1		PUHY-P400YHM-A(-BS)	PUHY-P450YHM-A(-BS)	PUHY-P450YHM-A(-BS)	PUHY-P450YHM-A(-BS)
	Outdoor unit 2		PUHY-P350YHM-A(-BS)	PUHY-P350YHM-A(-BS)	PUHY-P400YHM-A(-BS)	PUHY-P450YHM-A(-BS)
	Outdoor unit 3		PUHY-P350YHM-A(-BS)	PUHY-P350YHM-A(-BS)	PUHY-P350YHM-A(-BS)	PUHY-P350YHM-A(-BS)
Outdoor Twinning Kit(optional parts)			CMY-Y300VBK2			
Indoor unit~Twinning pipe 2	Liquid	a	ø19.05			
	Gas	b	ø41.28			
Twinning pipe 1~ Twinning pipe 2	Liquid	c	ø19.05			
	Gas	d	ø34.93			

Note 1. Connect the pipes as shown in the figure above. Refer to the table above for the pipe size.
2. The detachable leg can be removed at site.
3. Twinning pipes should not be tilted more than 15 degrees from the ground. See the Installation Manual for details.

PUHY-P200, P250, P300, EP200YHM-A (-BS)

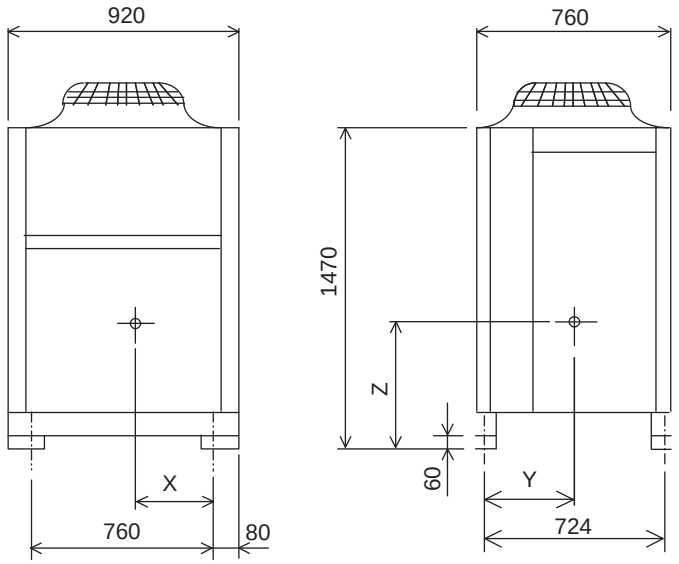

Model	X	Y	Z
PUHY-P200YHM-A (-BS)	330	309	647
PUHY-P250YHM-A (-BS)	334	329	652
PUHY-P300YHM-A (-BS)	320	319	632
PUHY-EP200YHM-A (-BS)	334	329	652

PUHY-P350, P400, P450, EP250, EP300YHM-A (-BS)

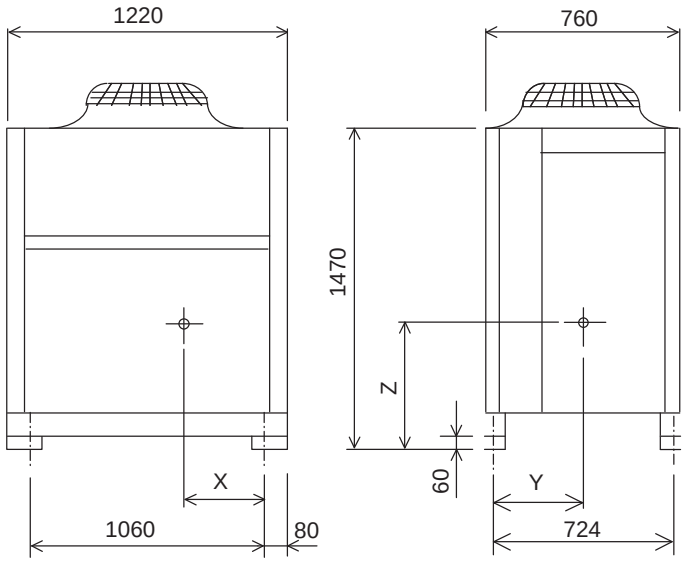

Model	X	Y	Z
PUHY-P350YHM-A (-BS)	440	329	630
PUHY-P400YHM-A (-BS)	440	329	630
PUHY-P450YHM-A (-BS)	440	329	630
PUHY-EP250YHM-A (-BS)	440	329	630
PUHY-EP300YHM-A (-BS)	440	329	630

Ref. : PUHY_YHM-A_COG_EUDB_ALL_2

Y

PUHY-P200, 250, 300, 350, 400, 450YHM-A(-BS)
PUHY-EP200, 250, 300YHM-A(-BS)

Ref. :PUHY_YHM-A_EWD_EUDB_ALL

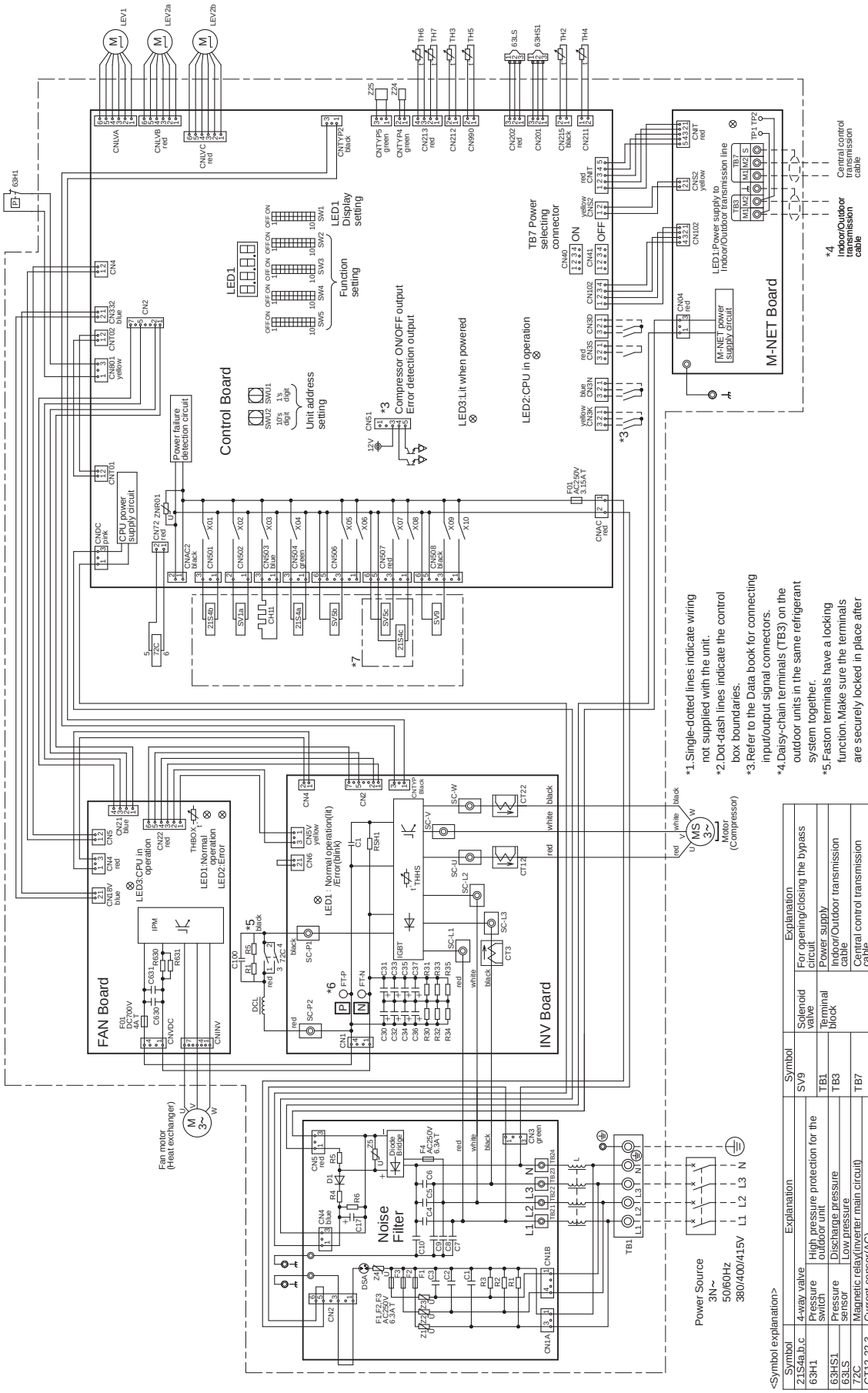

*7.Difference of appliance

Model name	Appliance
P200/P250/P300 EP200	*7 do not exist
P350/P400/P450 EP250/EP300	*7 exist

<Symbol explanation>

Symbol	Explanation	Symbol	Explanation	Symbol	Explanation
21S4a,b,c	4-way valve	SV9	Solenoid valve		For opening/closing the bypass circuit
63H1	Pressure switch: High pressure protection for the outdoor unit	TB1	Terminal block		Power supply
63HS1	Pressure sensor: Discharge pressure	TB3	Terminal block		Indoor/Outdoor transmission cable
63LS	Pressure sensor: Low pressure	TB7	Terminal block		Central control transmission cable
72C	Magnetic relay(Inverter main circuit)	TH2	Thermistor		Subcool bypass outlet temperature
CT12,22,3	Current sensor(AC)	TH3	Thermistor		Pipe temperature
CH11	Crankcase heater(for heating the compressor)	TH4	Thermistor		Discharge pipe temperature
DCL	DC reactor	TH5	Thermistor		ACC inlet pipe temperature
LEV1	Linear expansion valve: HIC bypass,Controls refrigerant flow in HIC circuit	TH6	Thermistor		Subcooled liquid refrigerant temperature
LEV2a,b	Linear expansion valve: Pressure control,Refrigerant flow rate control	TH7	Thermistor		OA temperature
SV1a	Solenoid valve: For opening/closing the bypass circuit under the O/S	THBOX	Thermistor		Control box internal temperature
SV5b,c	Solenoid valve: Outdoor unit heat exchanger capacity control	THHS	Thermistor		IGBT temperature
		Z24,25	Ferrite core		Function setting connector

Measurement condition
PUHY-P200,250,300YHM

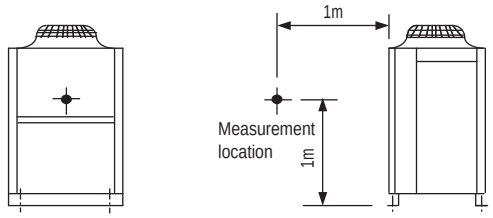

Sound level of PUHY-P300YHM-A(-BS)

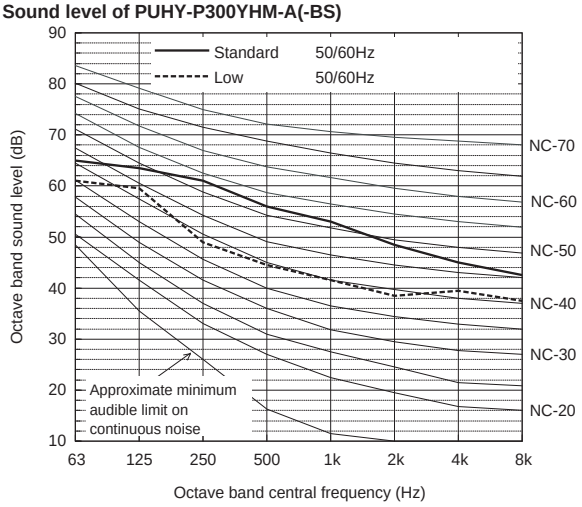

		63	125	250	500	1k	2k	4k	8k	dB(A)
Standard	50/60Hz	65.0	63.5	61.0	56.0	53.0	48.5	45.0	42.5	59.0
Low Noise Mode	50/60Hz	61.0	59.5	49.0	44.5	41.5	38.5	39.5	37.5	50.0

When Low Noise Mode is set,the A/C system's capacity is limited. The system could return to normal operation from Low Noise Mode automatically in the case that the operation condition is severe.

Sound level of PUHY-P200YHM-A(-BS)

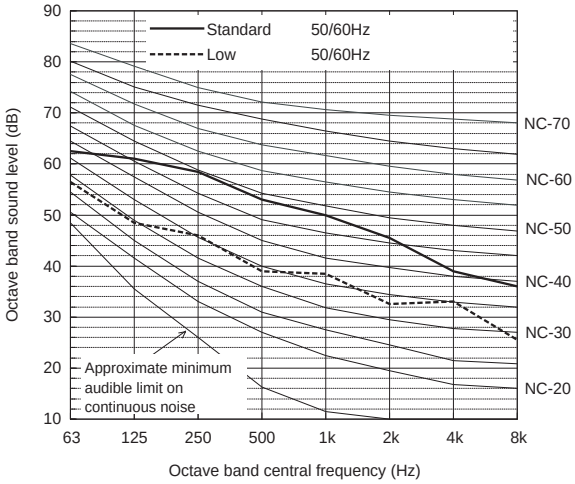

		63	125	250	500	1k	2k	4k	8k	dB(A)
Standard	50/60Hz	62.5	61.0	58.5	53.0	50.0	45.5	39.0	36.0	56.0
Low Noise Mode	50/60Hz	56.5	48.5	46.0	39.0	38.5	32.5	33.0	25.5	44.0

When Low Noise Mode is set,the A/C system's capacity is limited. The system could return to normal operation from Low Noise Mode automatically in the case that the operation condition is severe.

Sound level of PUHY-P250YHM-A(-BS)

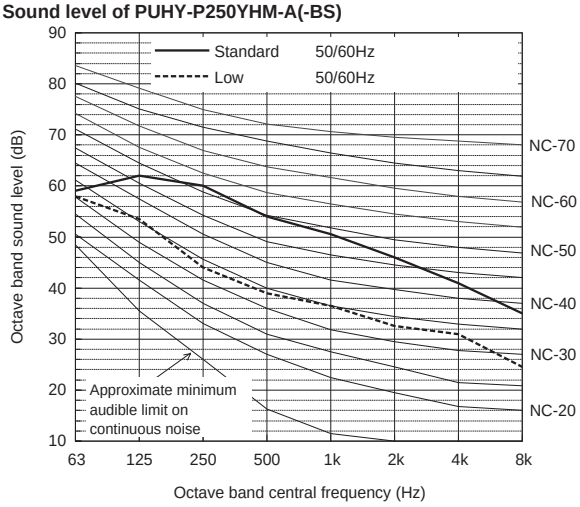

		63	125	250	500	1k	2k	4k	8k	dB(A)
Standard	50/60Hz	59.0	62.0	60.0	54.0	50.5	46.0	41.0	35.0	57.0
Low Noise Mode	50/60Hz	58.0	53.5	44.0	39.0	36.5	32.5	31.0	24.5	44.0

When Low Noise Mode is set,the A/C system's capacity is limited. The system could return to normal operation from Low Noise Mode automatically in the case that the operation condition is severe.

Y

Measurement condition
PUHY-P350,400,450YHM

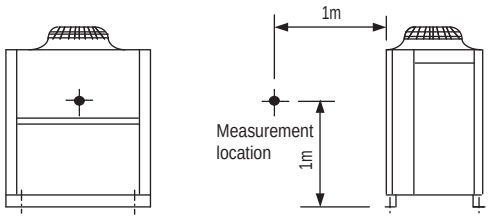

Sound level of PUHY-P450YHM-A(-BS)

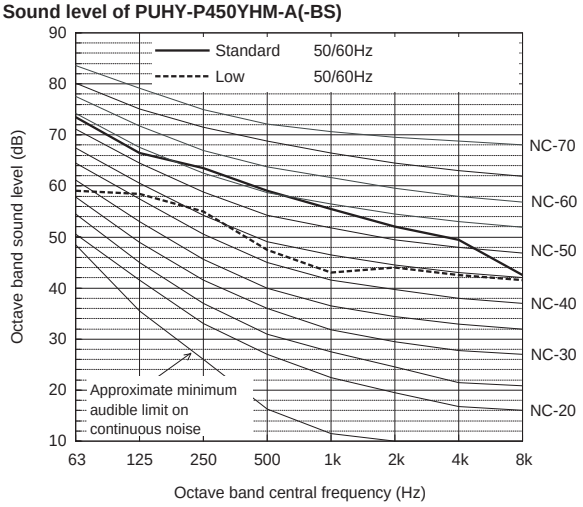

		63	125	250	500	1k	2k	4k	8k	dB(A)
Standard	50/60Hz	73.5	66.5	63.5	59.0	55.5	52.0	49.5	42.5	62.0
Low Noise Mode	50/60Hz	59.0	58.5	55.0	47.5	43.0	44.0	42.5	41.5	53.0

When Low Noise Mode is set,the A/C system's capacity is limited. The system could return to normal operation from Low Noise Mode automatically in the case that the operation condition is severe.

Sound level of PUHY-P350YHM-A(-BS)

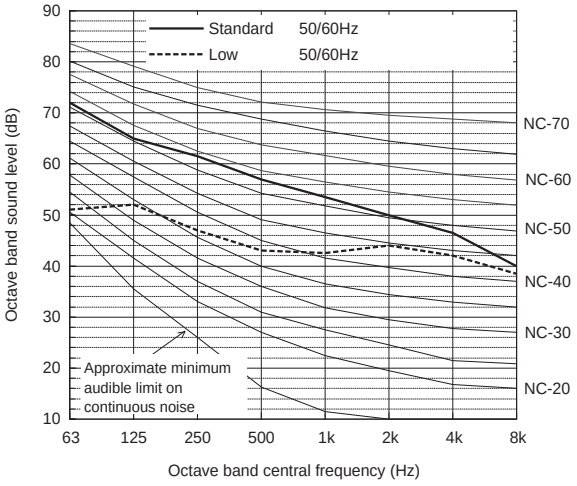

		63	125	250	500	1k	2k	4k	8k	dB(A)
Standard	50/60Hz	72.0	65.0	61.5	57.0	53.5	50.0	46.5	40.0	60.0
Low Noise Mode	50/60Hz	51.0	52.0	47.0	43.0	42.5	44.0	42.0	38.5	50.0

When Low Noise Mode is set,the A/C system's capacity is limited. The system could return to normal operation from Low Noise Mode automatically in the case that the operation condition is severe.

Sound level of PUHY-P400YHM-A(-BS)

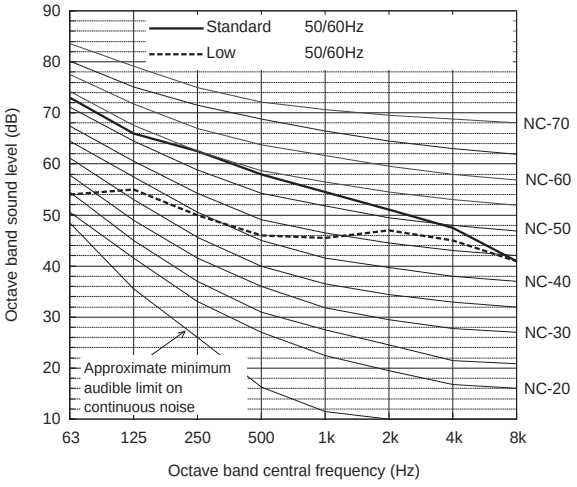

		63	125	250	500	1k	2k	4k	8k	dB(A)
Standard	50/60Hz	73.0	66.0	62.5	58.0	54.5	51.0	47.5	41.0	61.0
Low Noise Mode	50/60Hz	54.0	55.0	50.0	46.0	45.5	47.0	45.0	41.0	53.0

When Low Noise Mode is set,the A/C system's capacity is limited. The system could return to normal operation from Low Noise Mode automatically in the case that the operation condition is severe.

5. SOUND LEVELS

Measurement condition
PUHY-P500,550,600,650,700YSHM

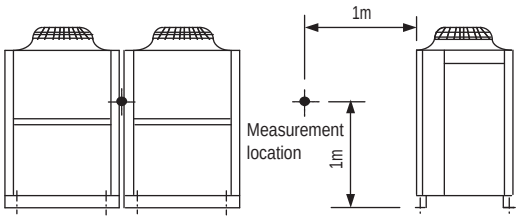

Sound level of PUHY-P600YSHM-A(-BS)

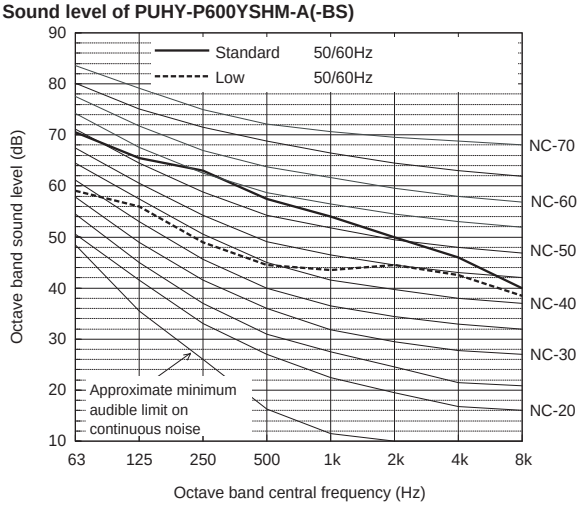

		63	125	250	500	1k	2k	4k	8k	dB(A)
Standard	50/60Hz	70.5	65.5	63.0	57.5	54.0	50.0	46.0	40.0	62.0
Low Noise Mode	50/60Hz	59.0	56.0	49.0	44.5	43.5	44.5	42.5	38.5	51.0

When Low Noise Mode is set,the A/C system's capacity is limited. The system could return to normal operation from Low Noise Mode automatically in the case that the operation condition is severe.

Sound level of PUHY-P500YSHM-A(-BS)

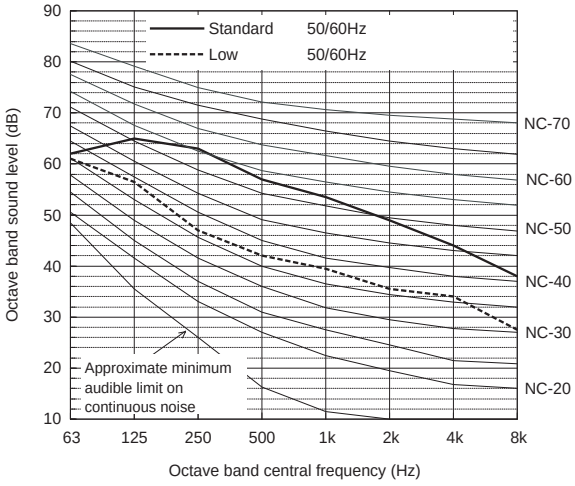

		63	125	250	500	1k	2k	4k	8k	dB(A)
Standard	50/60Hz	62.0	65.0	63.0	57.0	53.5	49.0	44.0	38.0	60.0
Low Noise Mode	50/60Hz	61.0	56.5	47.0	42.0	39.5	35.5	34.0	27.5	47.0

When Low Noise Mode is set,the A/C system's capacity is limited. The system could return to normal operation from Low Noise Mode automatically in the case that the operation condition is severe.

Sound level of PUHY-P650YSHM-A(-BS)

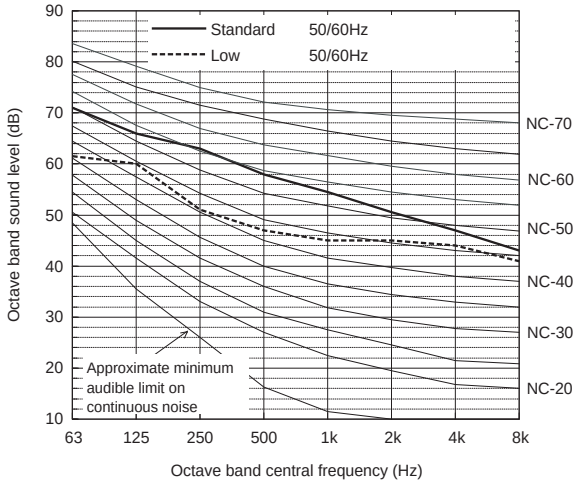

		63	125	250	500	1k	2k	4k	8k	dB(A)
Standard	50/60Hz	71.0	66.0	63.0	58.0	54.5	50.5	47.0	43.0	62.5
Low Noise Mode	50/60Hz	61.5	60.0	51.0	47.0	45.0	45.0	44.0	41.0	53.0

When Low Noise Mode is set,the A/C system's capacity is limited. The system could return to normal operation from Low Noise Mode automatically in the case that the operation condition is severe.

Sound level of PUHY-P550YSHM-A(-BS)

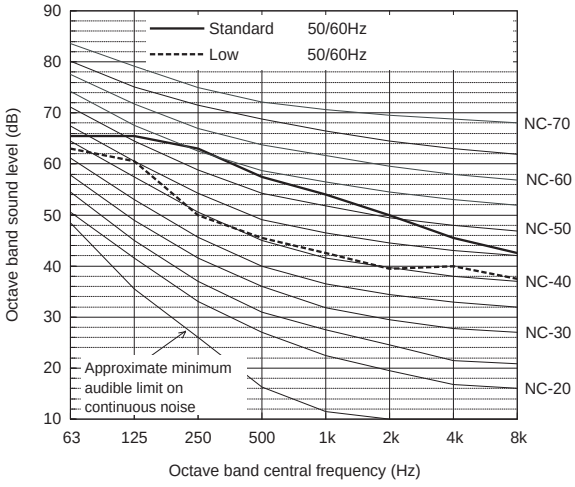

		63	125	250	500	1k	2k	4k	8k	dB(A)
Standard	50/60Hz	65.5	65.5	63.0	57.5	54.0	50.0	45.5	42.5	61.0
Low Noise Mode	50/60Hz	63.0	60.5	50.0	45.5	42.5	39.5	40.0	37.5	51.0

When Low Noise Mode is set,the A/C system's capacity is limited. The system could return to normal operation from Low Noise Mode automatically in the case that the operation condition is severe.

Sound level of PUHY-P700YSHM-A(-BS)

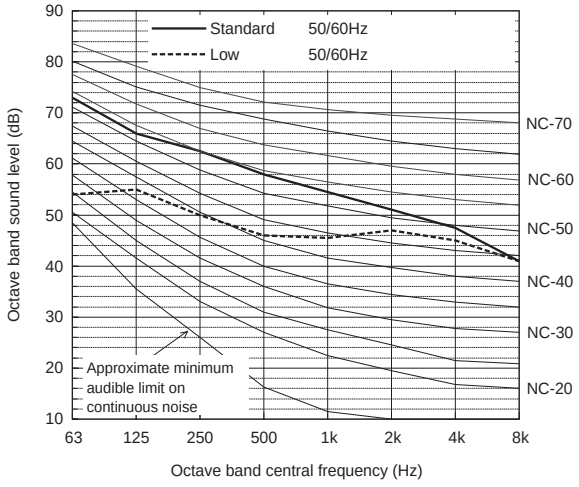

		63	125	250	500	1k	2k	4k	8k	dB(A)
Standard	50/60Hz	73.0	66.0	62.5	58.0	54.5	51.0	47.5	41.0	63.0
Low Noise Mode	50/60Hz	54.0	55.0	50.0	46.0	45.5	47.0	45.0	41.0	53.0

When Low Noise Mode is set,the A/C system's capacity is limited. The system could return to normal operation from Low Noise Mode automatically in the case that the operation condition is severe.

Y

Measurement condition
PUHY-P750,800,850,900YSHM

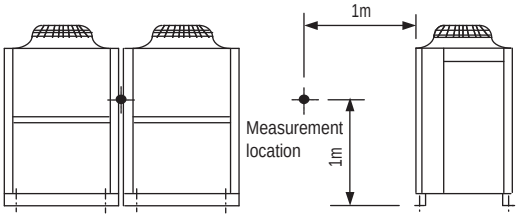

Sound level of PUHY-P850YSHM-A(-BS)

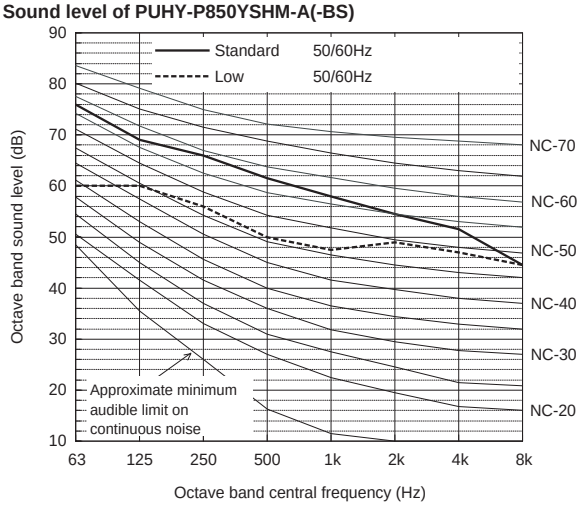

		63	125	250	500	1k	2k	4k	8k	dB(A)
Standard	50/60Hz	76.0	69.0	66.0	61.5	58.0	54.5	51.5	44.5	64.5
Low Noise Mode	50/60Hz	60.0	60.0	56.0	50.0	47.5	49.0	47.0	44.5	56.0

When Low Noise Mode is set,the A/C system's capacity is limited. The system could return to normal operation from Low Noise Mode automatically in the case that the operation condition is severe.

Sound level of PUHY-P750YSHM-A(-BS)

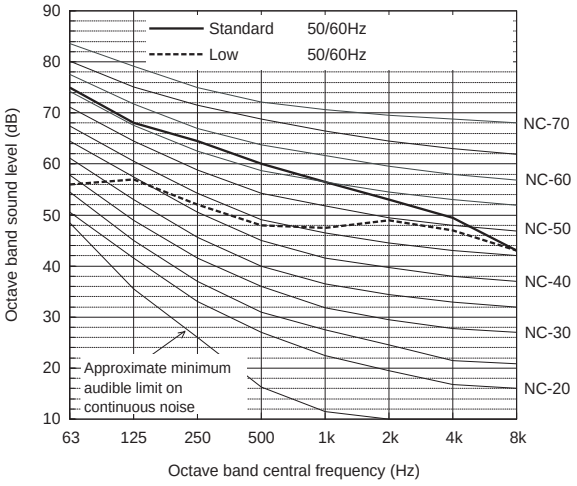

		63	125	250	500	1k	2k	4k	8k	dB(A)
Standard	50/60Hz	75.0	68.0	64.5	60.0	56.5	53.0	49.5	43.0	63.5
Low Noise Mode	50/60Hz	56.0	57.0	52.0	48.0	47.5	49.0	47.0	43.0	55.0

When Low Noise Mode is set,the A/C system's capacity is limited. The system could return to normal operation from Low Noise Mode automatically in the case that the operation condition is severe.

Sound level of PUHY-P900YSHM-A(-BS)

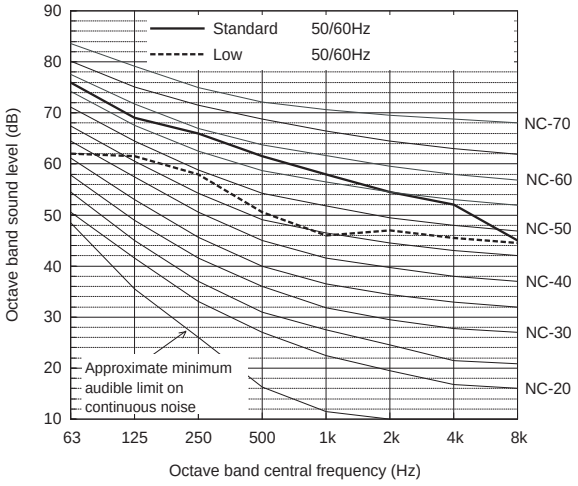

		63	125	250	500	1k	2k	4k	8k	dB(A)
Standard	50/60Hz	76.0	69.0	66.0	61.5	58.0	54.5	52.0	45.0	65.0
Low Noise Mode	50/60Hz	62.0	61.5	58.0	50.5	46.0	47.0	45.5	44.5	56.0

When Low Noise Mode is set,the A/C system's capacity is limited. The system could return to normal operation from Low Noise Mode automatically in the case that the operation condition is severe.

Sound level of PUHY-P800YSHM-A(-BS)

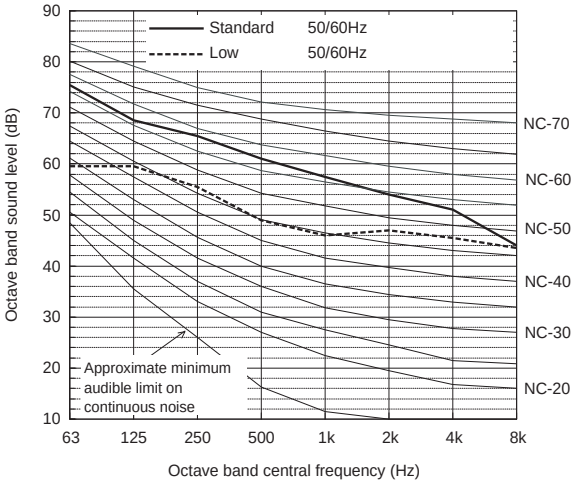

		63	125	250	500	1k	2k	4k	8k	dB(A)
Standard	50/60Hz	75.5	68.5	65.5	61.0	57.5	54.0	51.0	44.0	64.0
Low Noise Mode	50/60Hz	59.5	59.5	55.5	49.0	46.0	47.0	45.5	43.5	55.0

When Low Noise Mode is set,the A/C system's capacity is limited. The system could return to normal operation from Low Noise Mode automatically in the case that the operation condition is severe.

5. SOUND LEVELS

Measurement condition
PUHY-P950,1000,1050,1100,1150YSHM

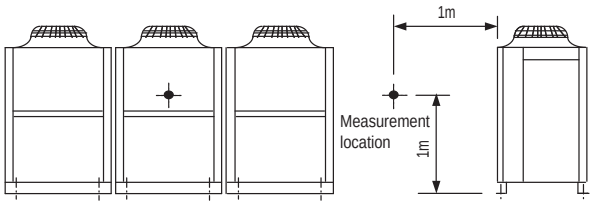

Sound level of PUHY-P1050YSHM-A(-BS)

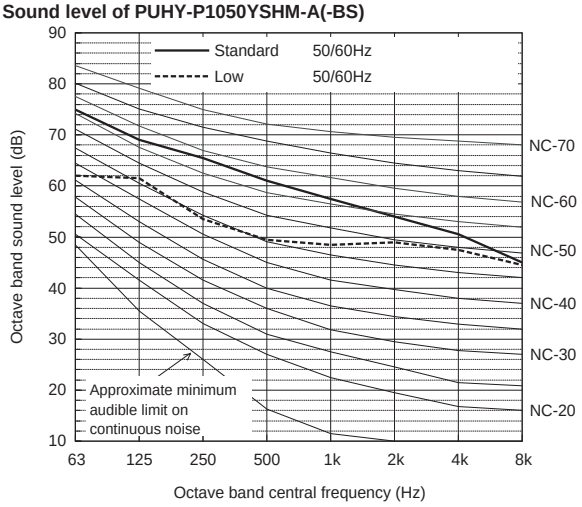

		63	125	250	500	1k	2k	4k	8k	dB(A)
Standard	50/60Hz	75.0	69.0	65.5	61.0	57.5	54.0	50.5	45.0	65.0
Low Noise Mode	50/60Hz	62.0	61.5	53.5	49.5	48.5	49.0	47.5	44.5	56.0

When Low Noise Mode is set,the A/C system's capacity is limited. The system could return to normal operation from Low Noise Mode automatically in the case that the operation condition is severe.

Sound level of PUHY-P950YSHM-A(-BS)

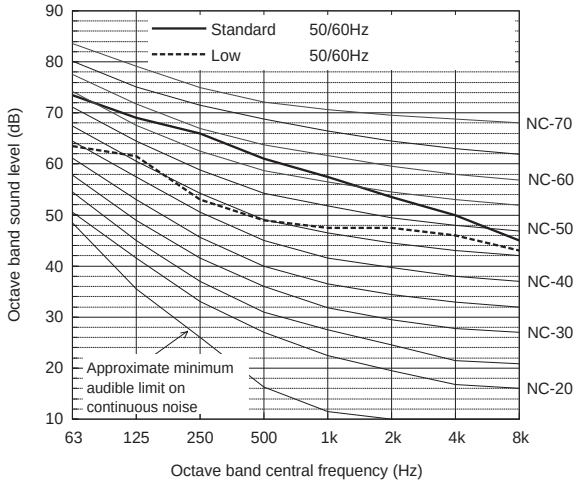

		63	125	250	500	1k	2k	4k	8k	dB(A)
Standard	50/60Hz	73.5	69.0	66.0	61.0	57.5	53.5	50.0	45.0	64.0
Low Noise Mode	50/60Hz	63.5	61.5	53.0	49.0	47.5	47.5	46.0	43.0	55.0

When Low Noise Mode is set,the A/C system's capacity is limited. The system could return to normal operation from Low Noise Mode automatically in the case that the operation condition is severe.

Sound level of PUHY-P1100YSHM-A(-BS)

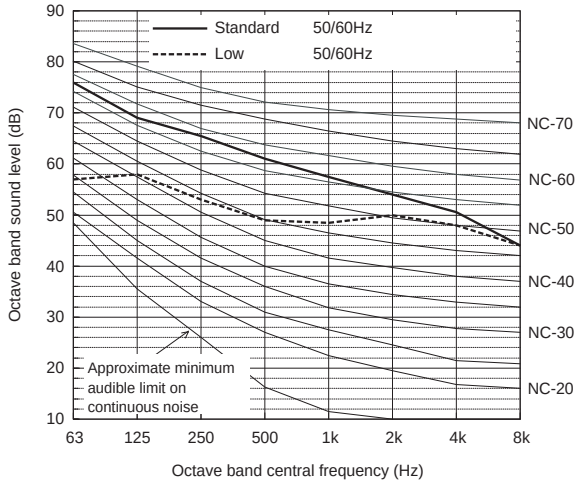

		63	125	250	500	1k	2k	4k	8k	dB(A)
Standard	50/60Hz	76.0	69.0	65.5	61.0	57.5	54.0	50.5	44.0	65.0
Low Noise Mode	50/60Hz	57.0	58.0	53.0	49.0	48.5	50.0	48.0	44.0	56.0

When Low Noise Mode is set,the A/C system's capacity is limited. The system could return to normal operation from Low Noise Mode automatically in the case that the operation condition is severe.

Sound level of PUHY-P1000YSHM-A(-BS)

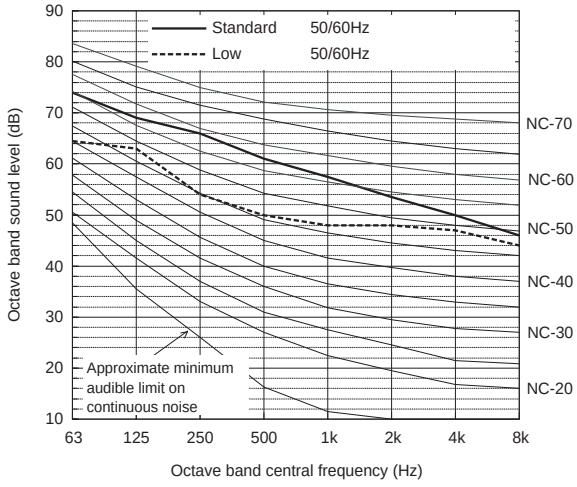

		63	125	250	500	1k	2k	4k	8k	dB(A)
Standard	50/60Hz	74.0	69.0	66.0	61.0	57.5	53.5	50.0	46.0	64.5
Low Noise Mode	50/60Hz	64.5	63.0	54.0	50.0	48.0	48.0	47.0	44.0	56.0

When Low Noise Mode is set,the A/C system's capacity is limited. The system could return to normal operation from Low Noise Mode automatically in the case that the operation condition is severe.

Sound level of PUHY-P1150YSHM-A(-BS)

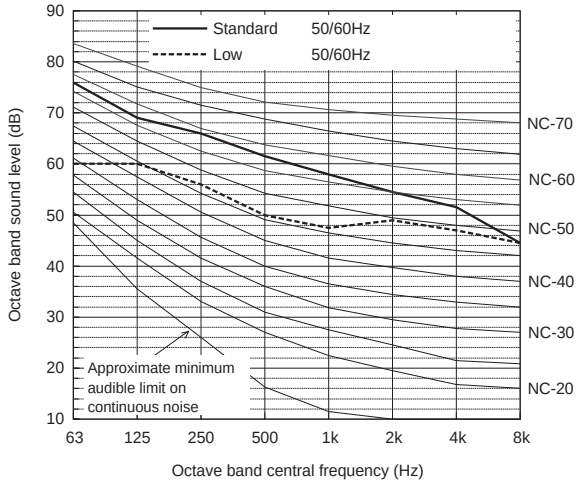

		63	125	250	500	1k	2k	4k	8k	dB(A)
Standard	50/60Hz	76.0	69.0	66.0	61.5	58.0	54.5	51.5	44.5	65.5
Low Noise Mode	50/60Hz	60.0	60.0	56.0	50.0	47.5	49.0	47.0	44.5	56.0

When Low Noise Mode is set,the A/C system's capacity is limited. The system could return to normal operation from Low Noise Mode automatically in the case that the operation condition is severe.

Y

Measurement condition
PUHY-P1200,1250YSHM

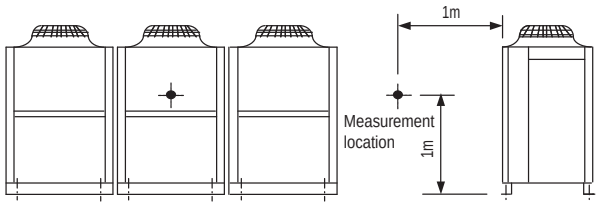

Sound level of PUHY-P1200YSHM-A(-BS)

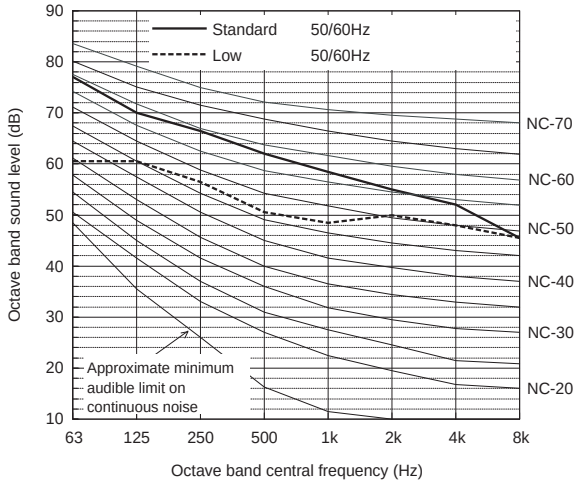

		63	125	250	500	1k	2k	4k	8k	dB(A)
Standard	50/60Hz	77.0	70.0	66.5	62.0	58.5	55.0	52.0	45.5	66.0
Low Noise Mode	50/60Hz	60.5	60.5	56.5	50.5	48.5	50.0	48.0	45.5	57.0

When Low Noise Mode is set,the A/C system's capacity is limited. The system could return to normal operation from Low Noise Mode automatically in the case that the operation condition is severe.

Sound level of PUHY-P1250YSHM-A(-BS)

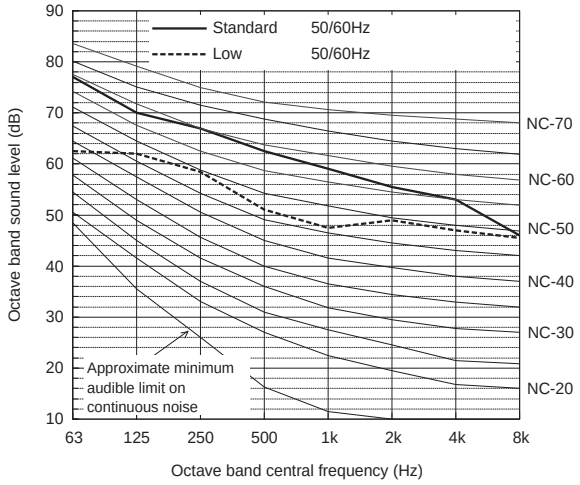

		63	125	250	500	1k	2k	4k	8k	dB(A)
Standard	50/60Hz	77.0	70.0	67.0	62.5	59.0	55.5	53.0	46.0	66.0
Low Noise Mode	50/60Hz	62.5	62.0	58.5	51.0	47.5	49.0	47.0	45.5	57.0

When Low Noise Mode is set,the A/C system's capacity is limited. The system could return to normal operation from Low Noise Mode automatically in the case that the operation condition is severe.

6-1. Correction by temperature

CITY MULTI could have various capacities at different designing temperatures. Using the nominal cooling/heating capacity values and the ratios below, the capacity can be found for various temperatures.

PUHY-		P200YHM-A	P250YHM-A
Nominal Cooling Capacity	kW	22.4	28.0
	BTU/h	76,400	95,500
Input	kW	5.72	7.73

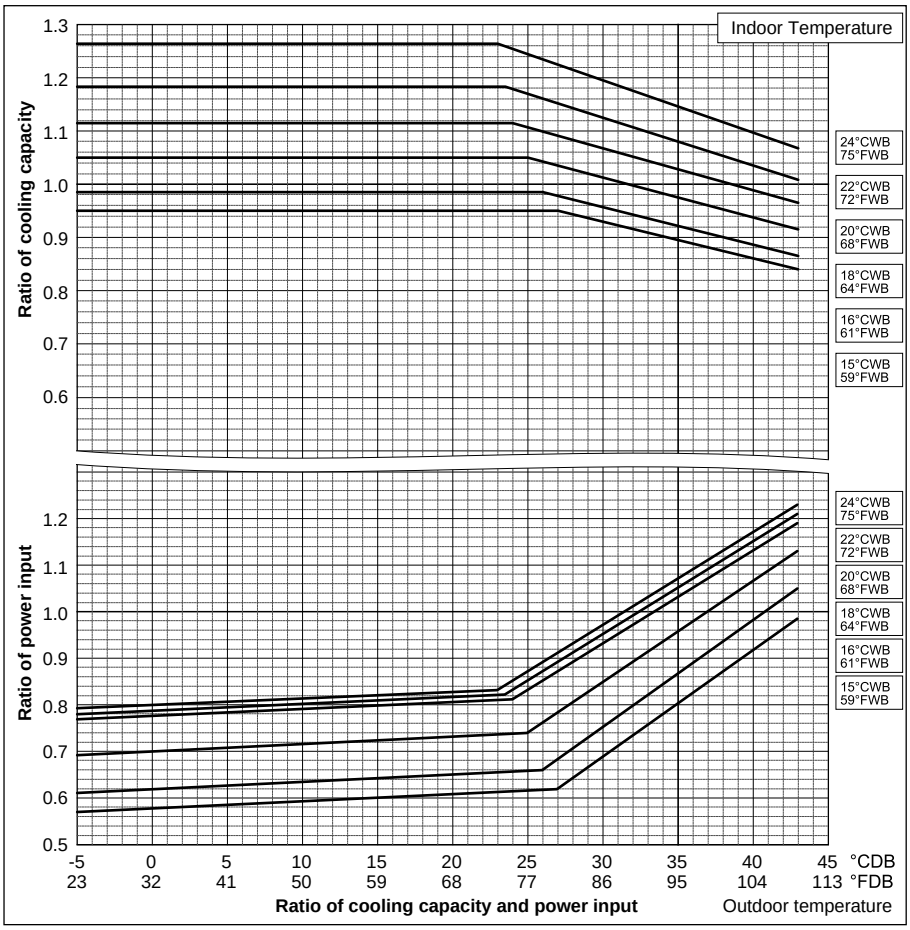

PUHY-		P200YHM-A	P250YHM-A
Nominal Heating Capacity	kW	25.0	31.5
	BTU/h	85,300	107,500
Input	kW	6.03	7.83

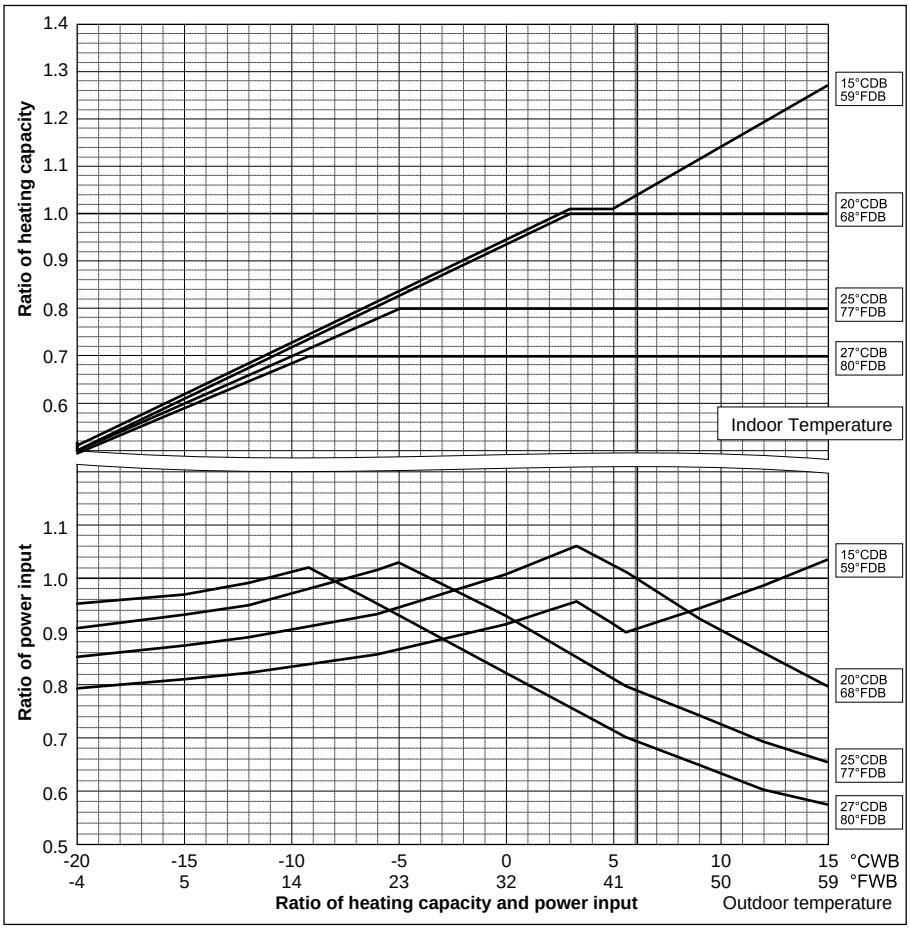

Ref:PUHY_YHM-A_CbTMP_EUDB_P200-P250

Y

PUHY-		P300YHM-A	P350YHM-A
Nominal Cooling Capacity	kW	33.5	40.0
	BTU/h	114,300	136,500
Input	kW	9.07	11.20

PUHY-		P400YHM-A
Nominal Cooling Capacity	kW	45.0
	BTU/h	153,500
Input	kW	13.23

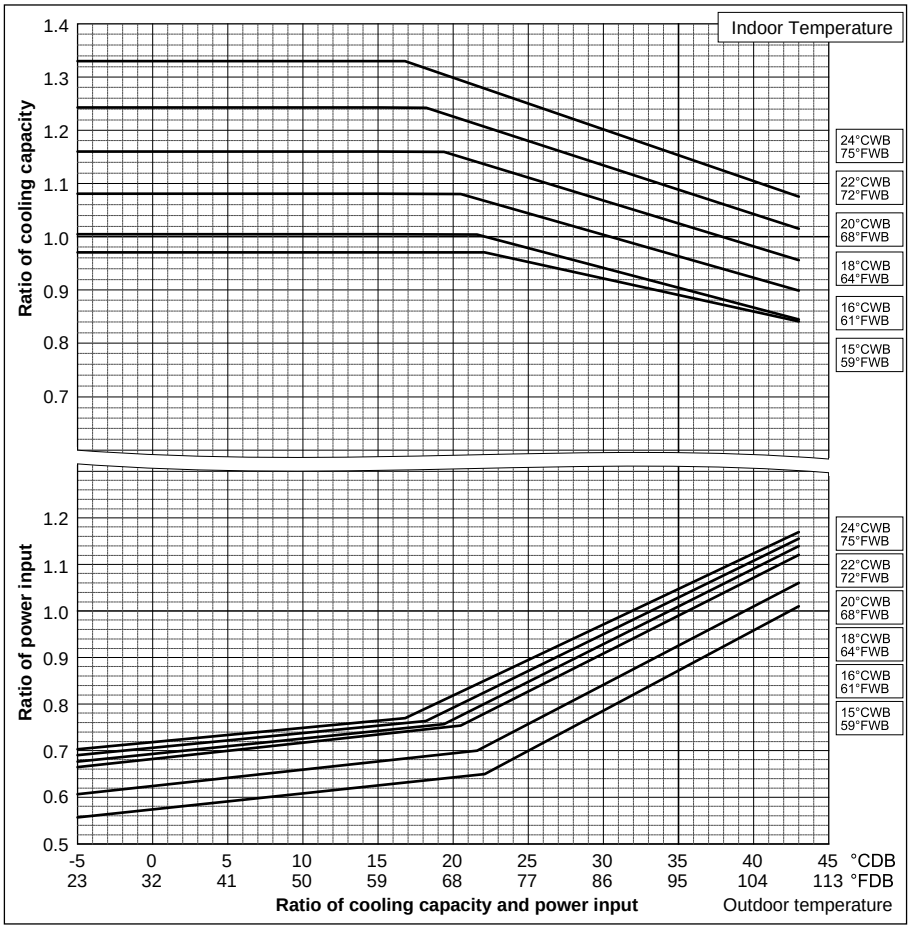

PUHY-		P300YHM-A	P350YHM-A
Nominal Heating Capacity	kW	37.5	45.0
	BTU/h	128,000	153,500
Input	kW	9.39	12.09

PUHY-		P400YHM-A
Nominal Heating Capacity	kW	50
	BTU/h	170,600
Input	kW	13.47

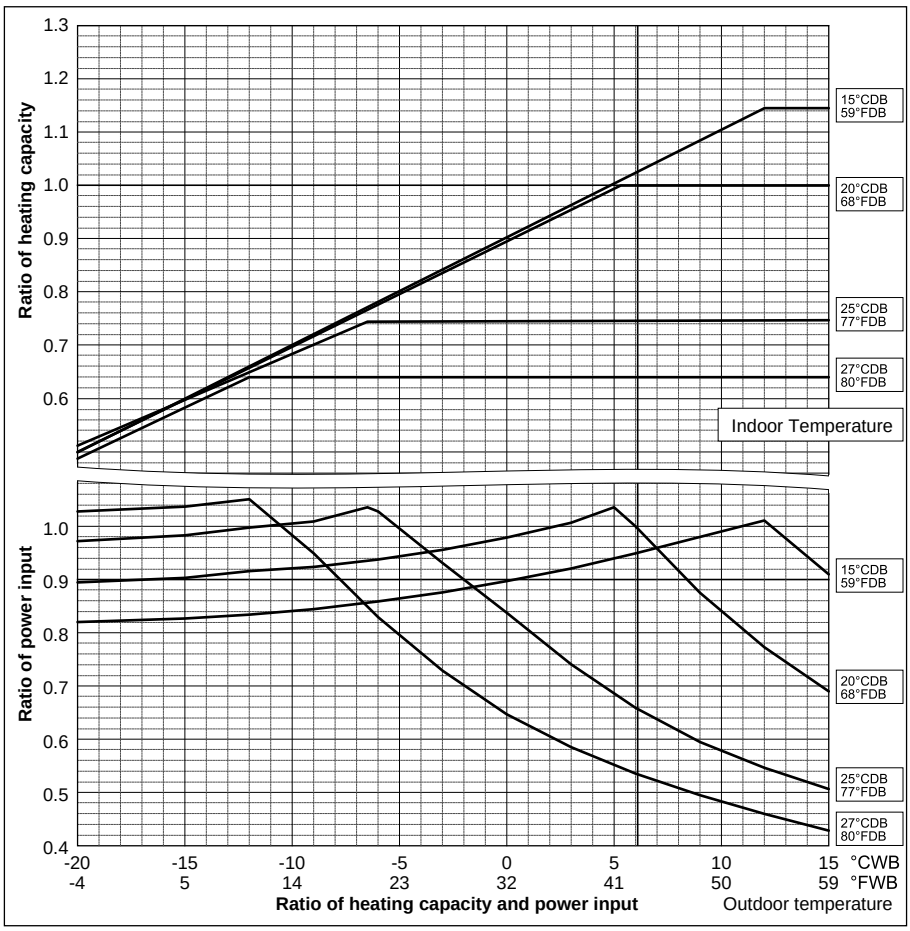

Ref:PUHY_YHM-A_CbTMP_EUDB_P300-P400

PUHY-		P450YHM-A	P500YSHM-A
Nominal Cooling Capacity	kW	50.0	56.0
	BTU/h	170,600	191,100
Input	kW	16.28	16.47

PUHY-		P550YSHM-A	P600YSHM-A
Nominal Cooling Capacity	kW	63.0	69.0
	BTU/h	215,000	235,400
Input	kW	18.36	18.75

PUHY-		P650YSHM-A
Nominal Cooling Capacity	kW	73.0
	BTU/h	249,100
Input	kW	20.79

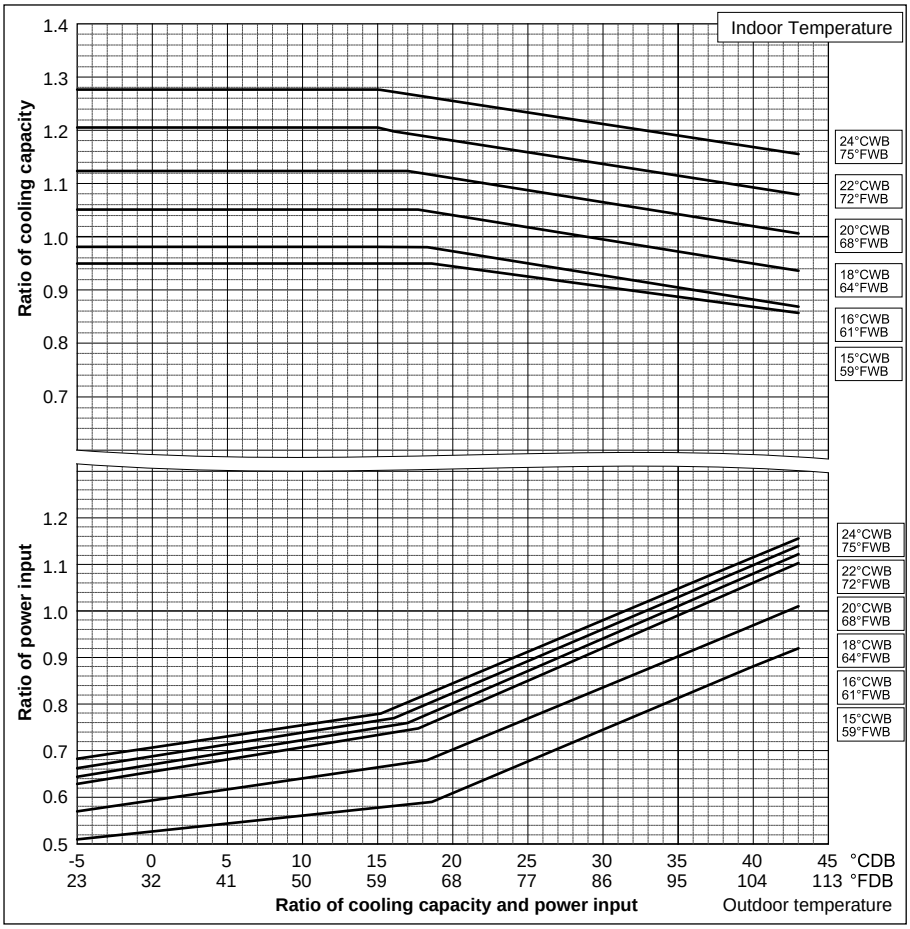

PUHY-		P450YHM-A	P500YSHM-A
Nominal Heating Capacity	kW	56.0	63.0
	BTU/h	191,100	215,000
Input	kW	15.38	16.40

PUHY-		P550YSHM-A	P600YSHM-A
Nominal Heating Capacity	kW	69.0	76.5
	BTU/h	235,400	261,000
Input	kW	18.06	19.92

PUHY-		P650YSHM-A
Nominal Heating Capacity	kW	81.5
	BTU/h	278,100
Input	kW	21.90

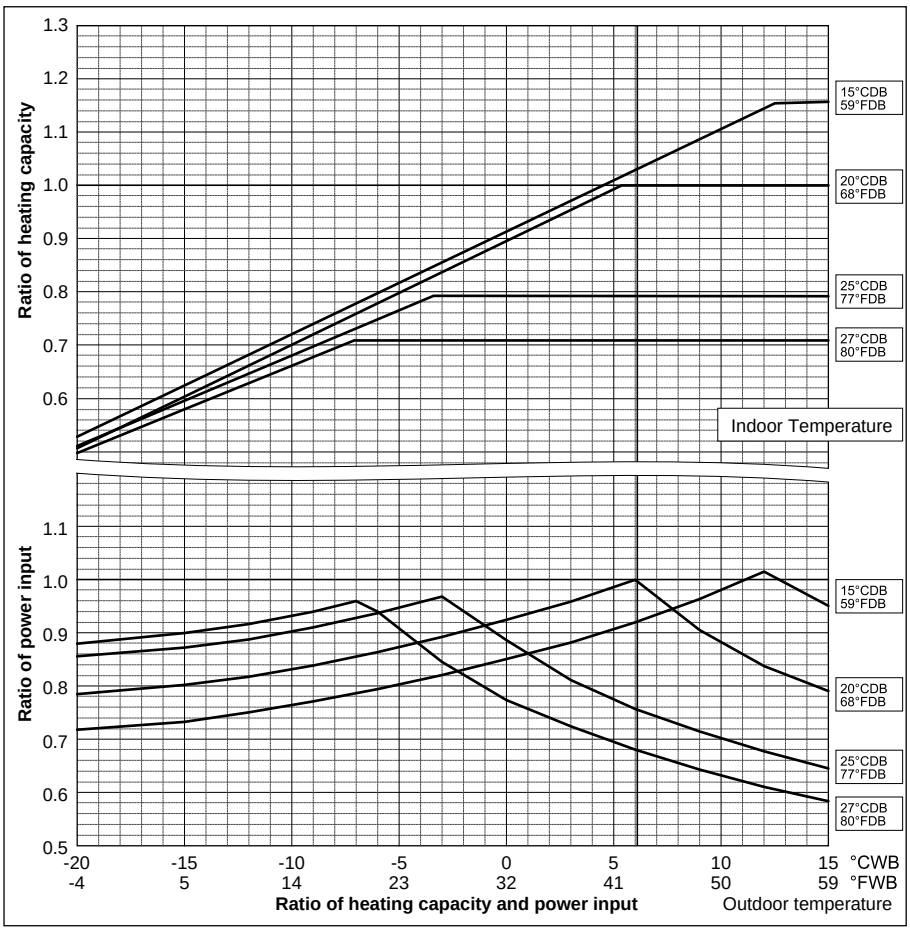

Ref:PUHY_YHM-A_CbTMP_EUDB_P450-P650

Y

PUHY-		P700YSHM-A	P750YSHM-A
Nominal Cooling Capacity	kW	80.0	85.0
	BTU/h	273,000	290,000
Input	kW	22.47	25.07

PUHY-		P800YSHM-A
Nominal Cooling Capacity	kW	90.0
	BTU/h	307,100
Input	kW	27.69

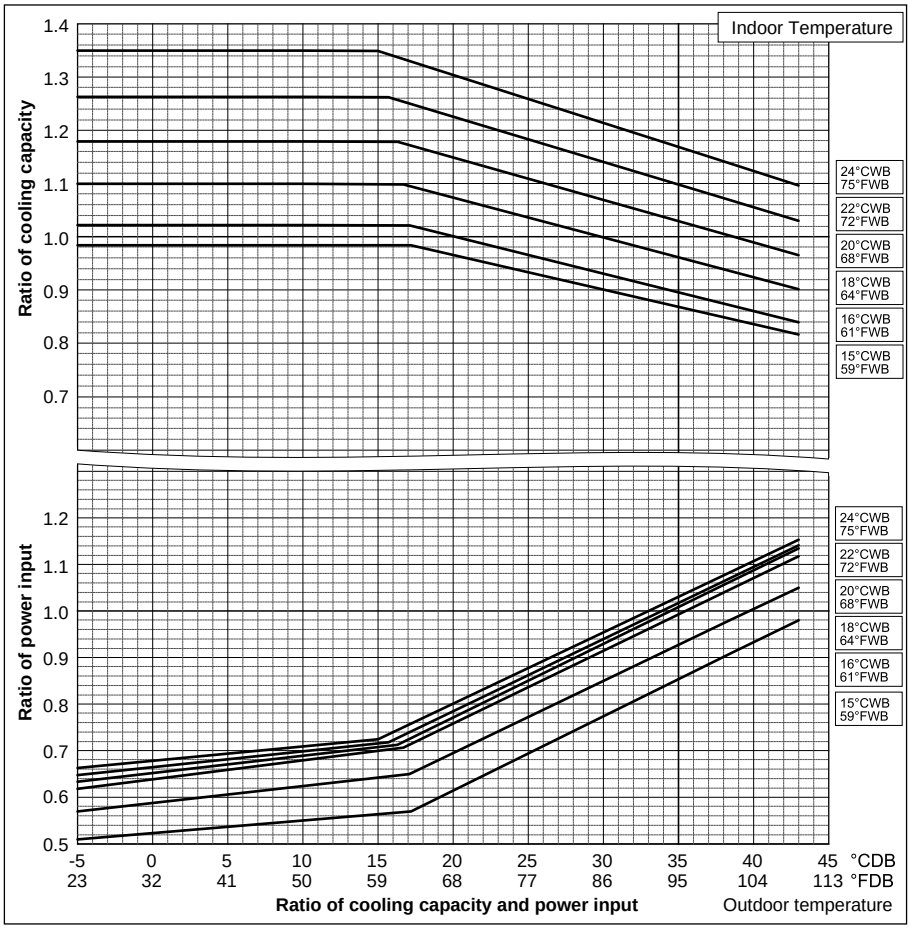

PUHY-		P700YSHM-A	P750YSHM-A
Nominal Heating Capacity	kW	88.0	95.0
	BTU/h	300,300	324,100
Input	kW	23.71	25.46

PUHY-		P800YSHM-A
Nominal Heating Capacity	kW	100.0
	BTU/h	341,200
Input	kW	25.70

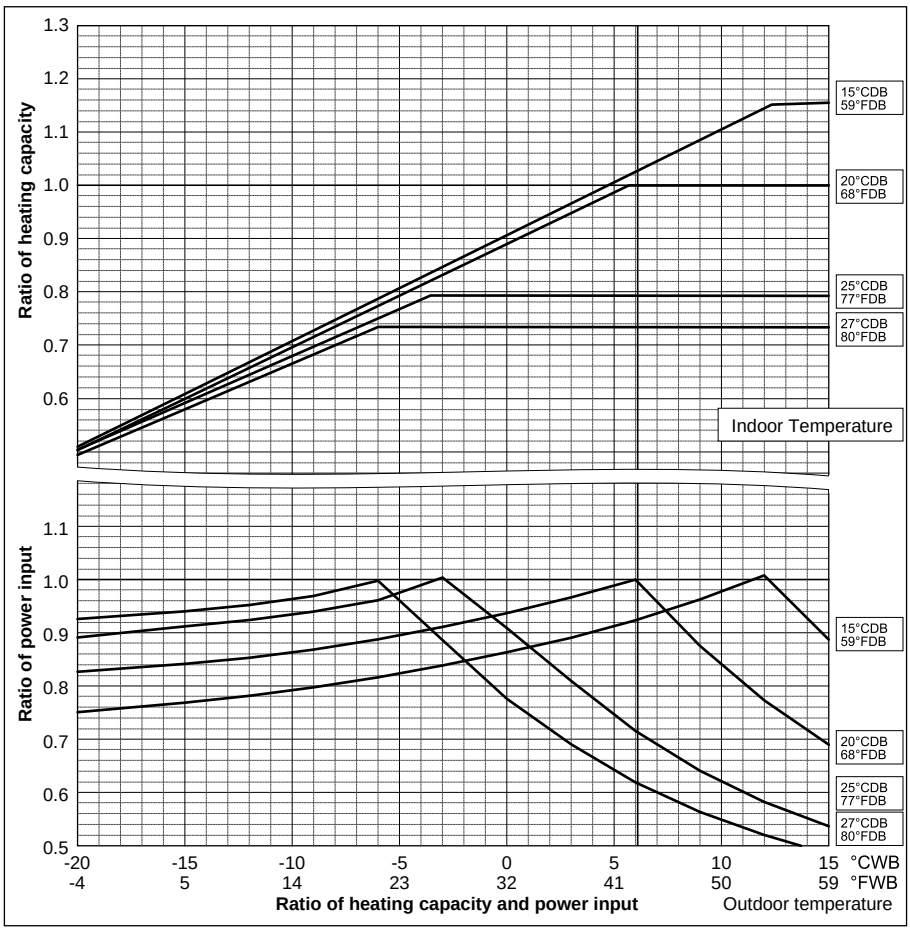

Ref:PUHY_YHM-A_CbTMP_EUDB_P700-P800

PUHY-		P850YSHM-A	P900YSHM-A
Nominal Cooling Capacity	kW	96.0	101.0
	BTU/h	327,600	344,600
Input	kW	30.18	33.33

PUHY-		P950YSHM-A	P1000YSHM-A
Nominal Cooling Capacity	kW	108.0	113.0
	BTU/h	368,500	385,600
Input	kW	30.68	32.47

PUHY-		P1050YSHM-A	P1100YSHM-A
Nominal Cooling Capacity	kW	118.0	124.0
	BTU/h	402,600	423,100
Input	kW	33.90	35.83

PUHY-		P1150YSHM-A	P1200YSHM-A
Nominal Cooling Capacity	kW	130.0	136.0
	BTU/h	443,600	464,000
Input	kW	39.39	41.71

PUHY-		P1250YSHM-A
Nominal Cooling Capacity	kW	140.0
	BTU/h	477,700
Input	kW	45.01

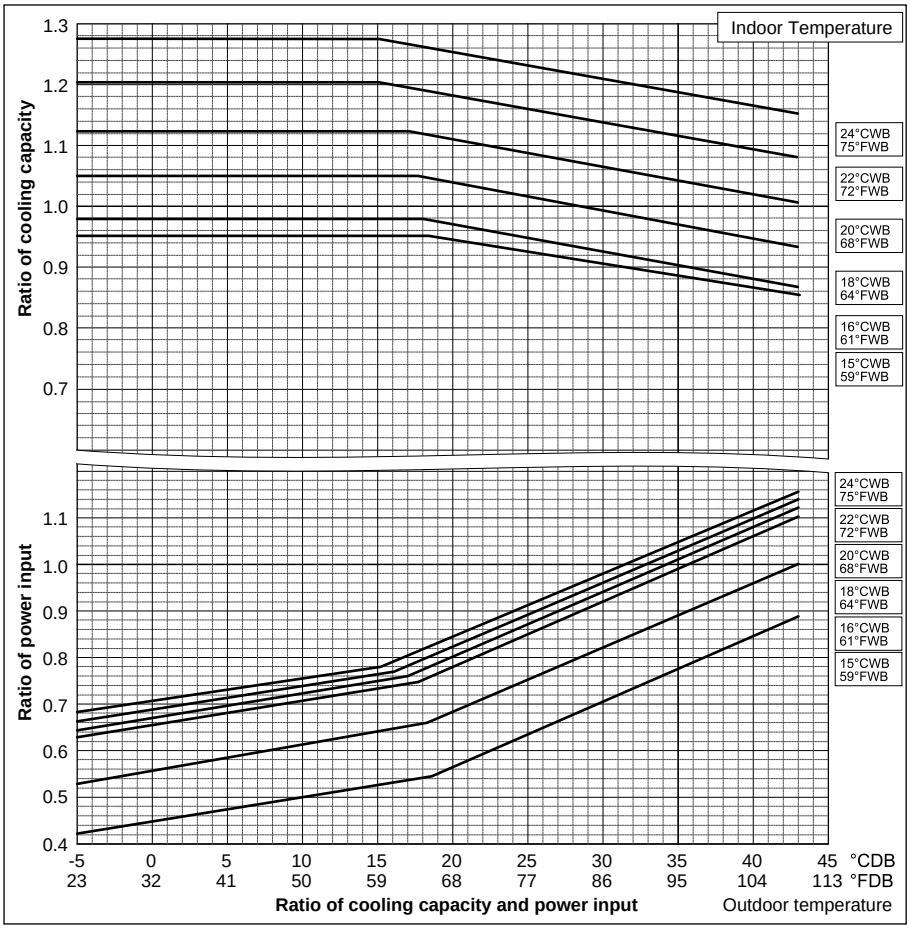

PUHY-		P850YSHM-A	P900YSHM-A
Nominal Heating Capacity	kW	108.0	113.0
	BTU/h	368,500	385,600
Input	kW	28.42	30.29

PUHY-		P950YSHM-A	P1000YSHM-A
Nominal Heating Capacity	kW	119.5	127.0
	BTU/h	407,700	433,300
Input	kW	30.02	33.15

PUHY-		P1050YSHM-A	P1100YSHM-A
Nominal Heating Capacity	kW	132.0	140.0
	BTU/h	450,400	477,700
Input	kW	35.01	36.93

PUHY-		P1150YSHM-A	P1200YSHM-A
Nominal Heating Capacity	kW	145.0	150.0
	BTU/h	494,700	511,800
Input	kW	39.08	40.10

PUHY-		P1250YSHM-A
Nominal Heating Capacity	kW	156.5
	BTU/h	534,000
Input	kW	42.06

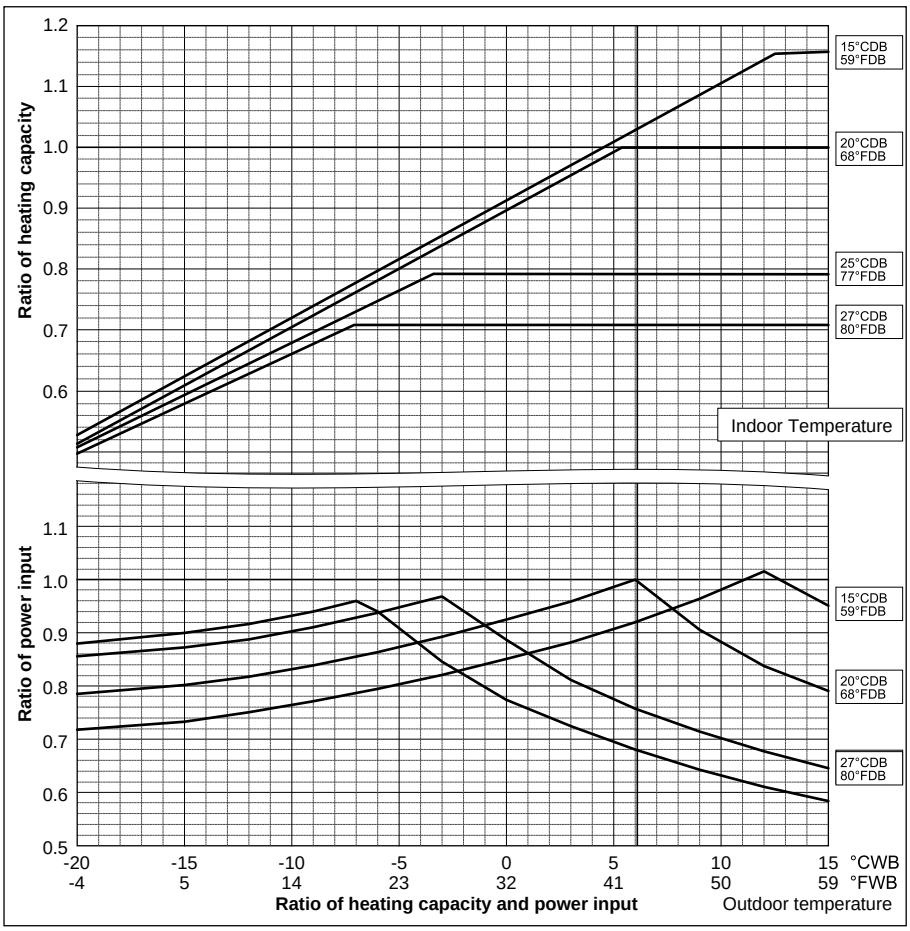

Ref:PUHY_YHM-A_CbTMP_EUDB_P850-P1250

6-2. Correction by total indoor

CITY MULTI system have different capacities and inputs when many combinations of indoor units with different total capacities are connected. Using following tables, the maximum capacity can be found to ensure the system is installed with enough capacity for a particular application.

Y

PUHY-P200,250YHM-A

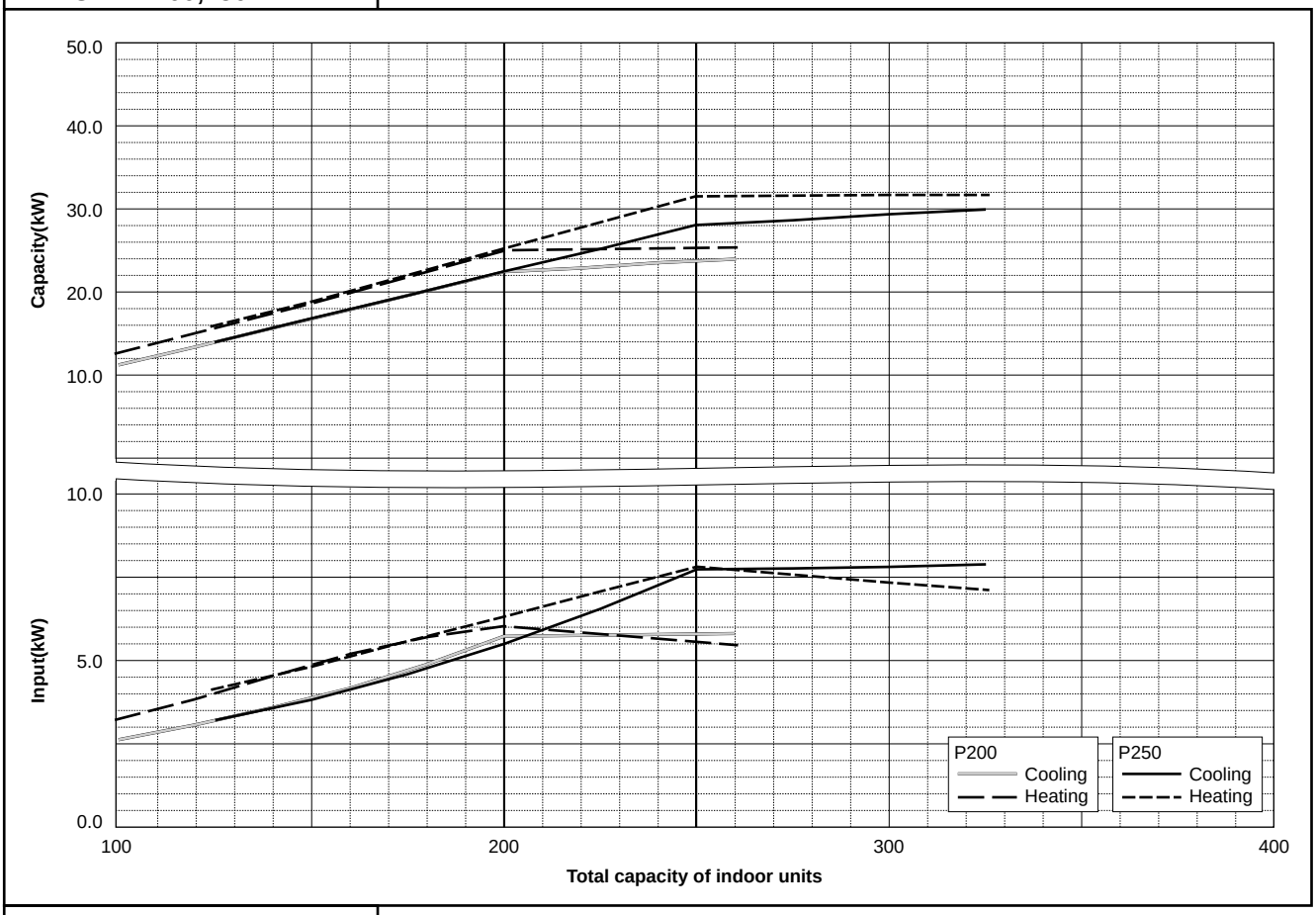

PUHY-P300,350YHM-A

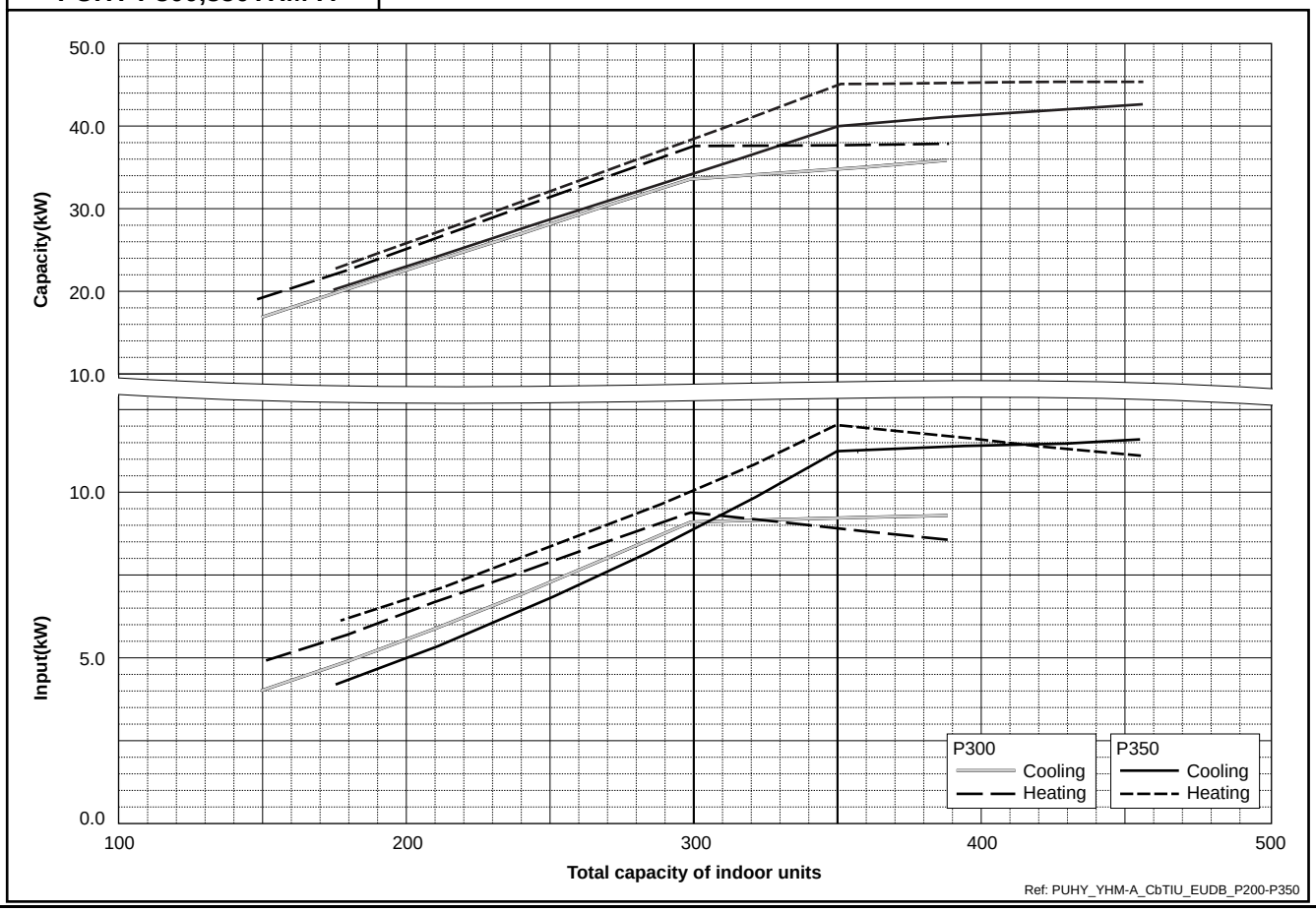

Y

PUHY-P400,450YHM-A

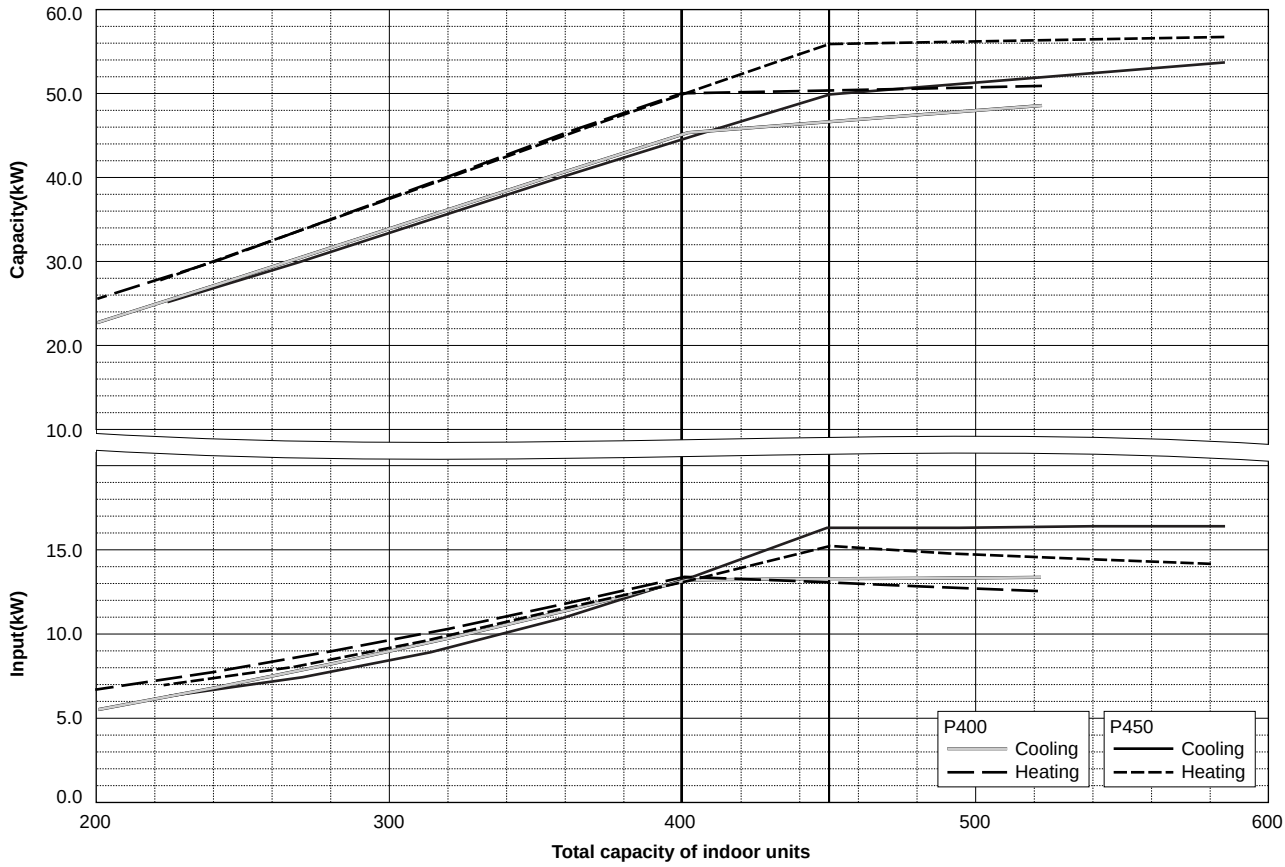

PUHY-P500,550YSHM-A

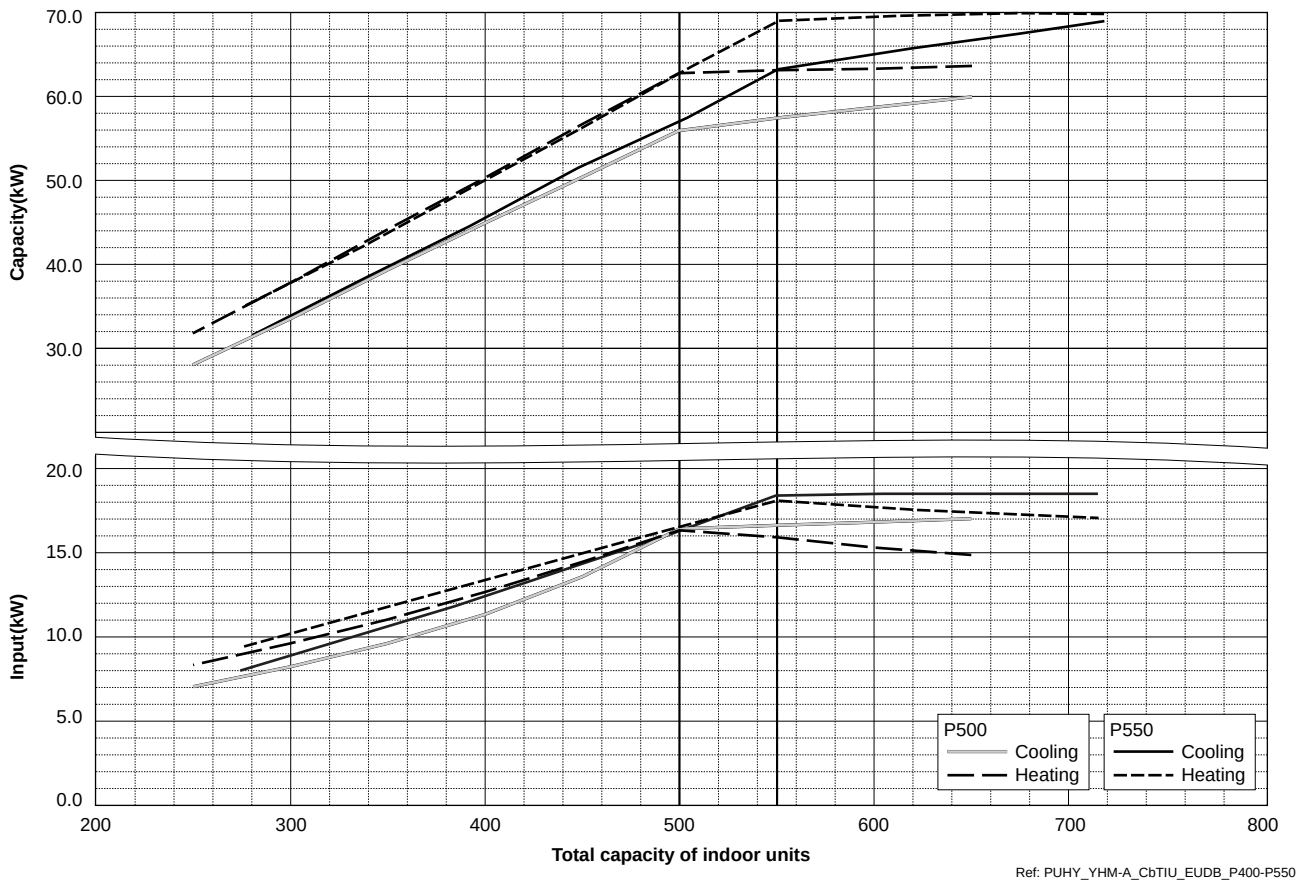

Ref: PUHY_YHM-A_CbTIU_EUDB_P400-P550

Y

PUHY-P600,650YSHM-A

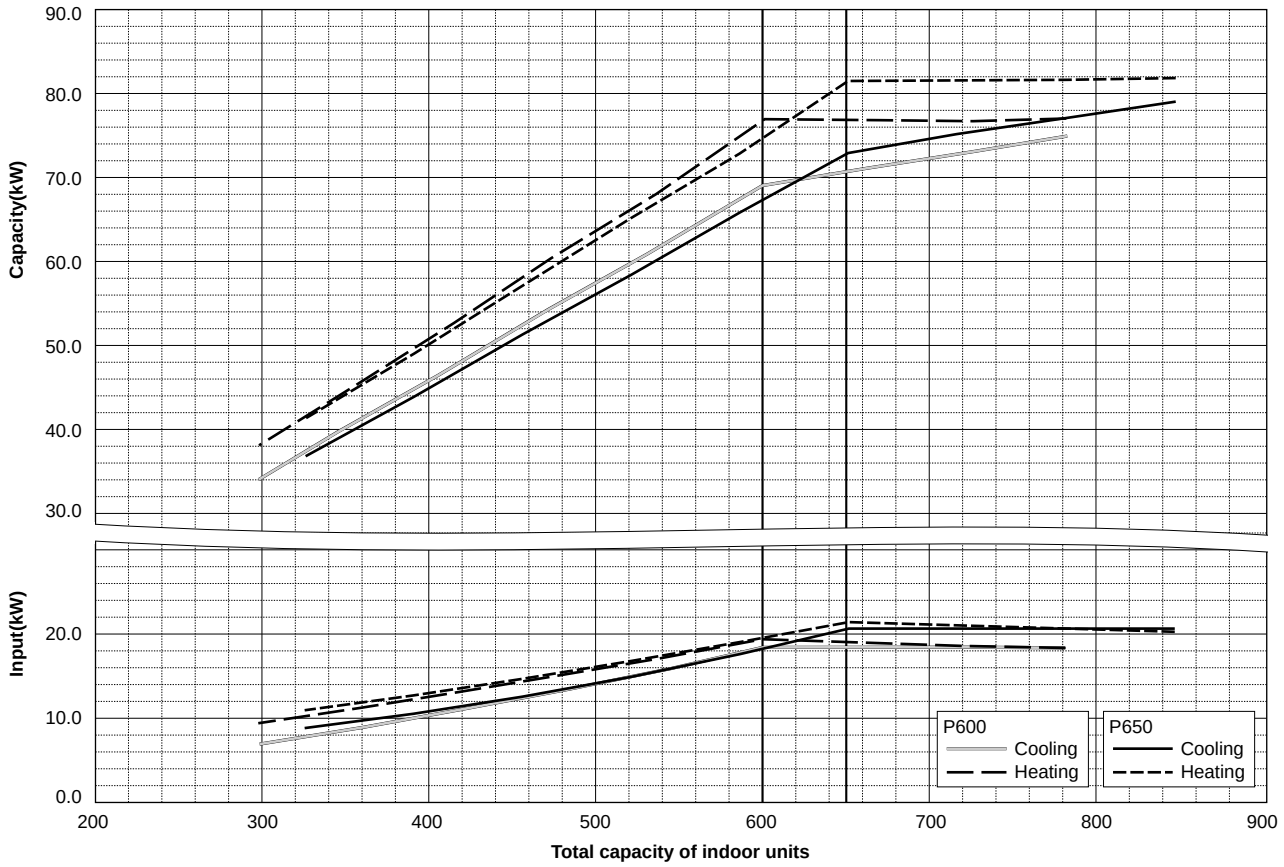

PUHY-P700,750YSHM-A

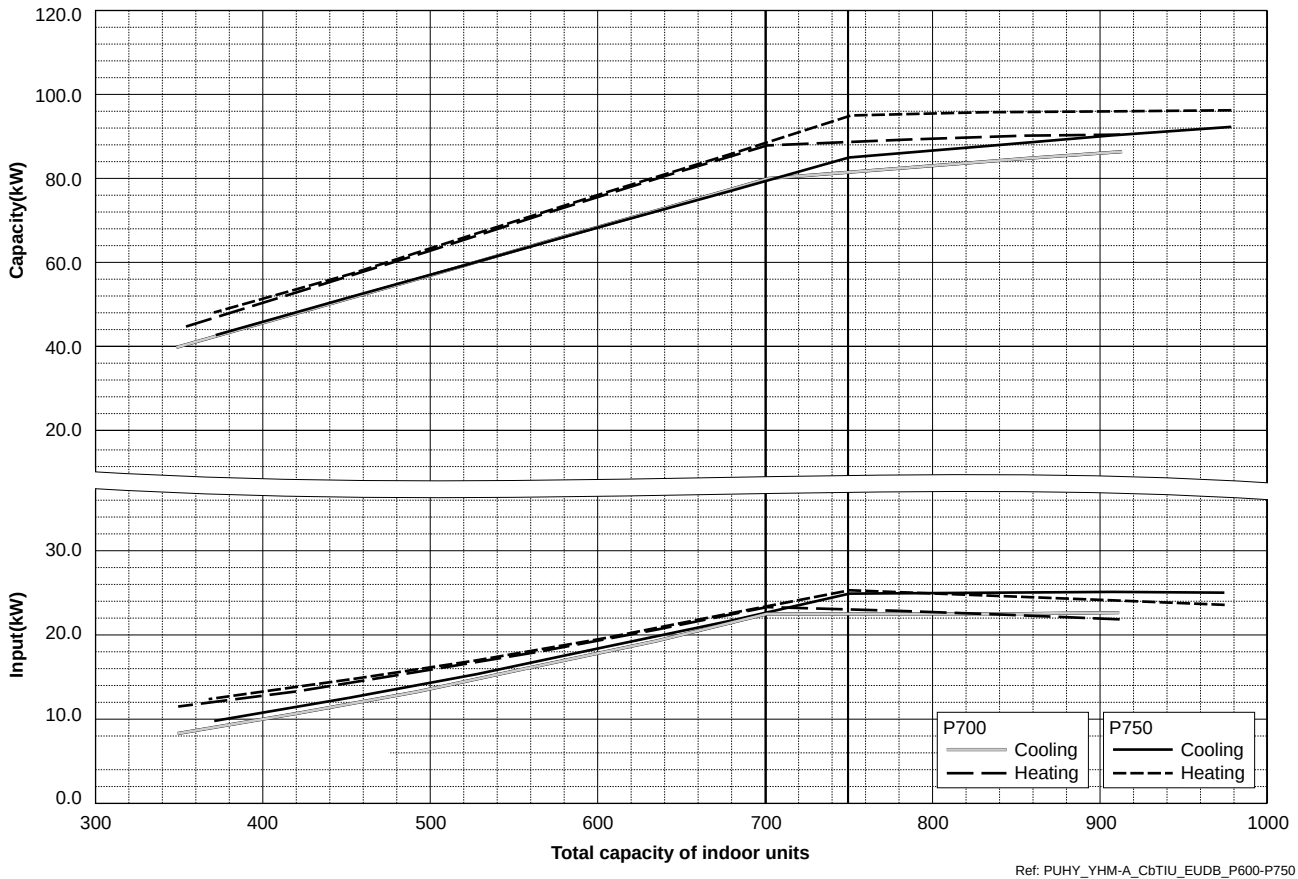

Ref: PUHY_YHM-A_CbTIU_EUDB_P600-P750

Y

PUHY-P800,850YSHM-A

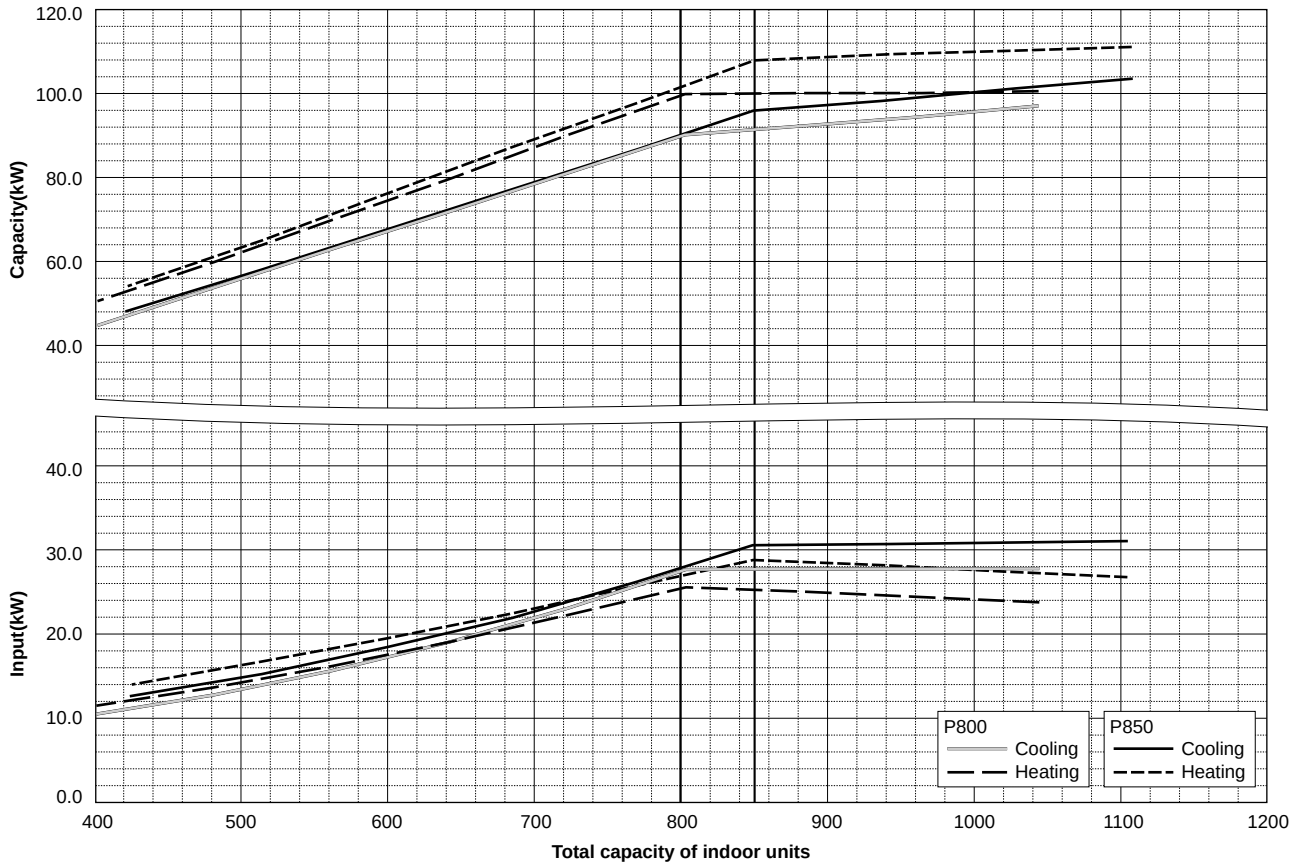

PUHY-P900,950YSHM-A

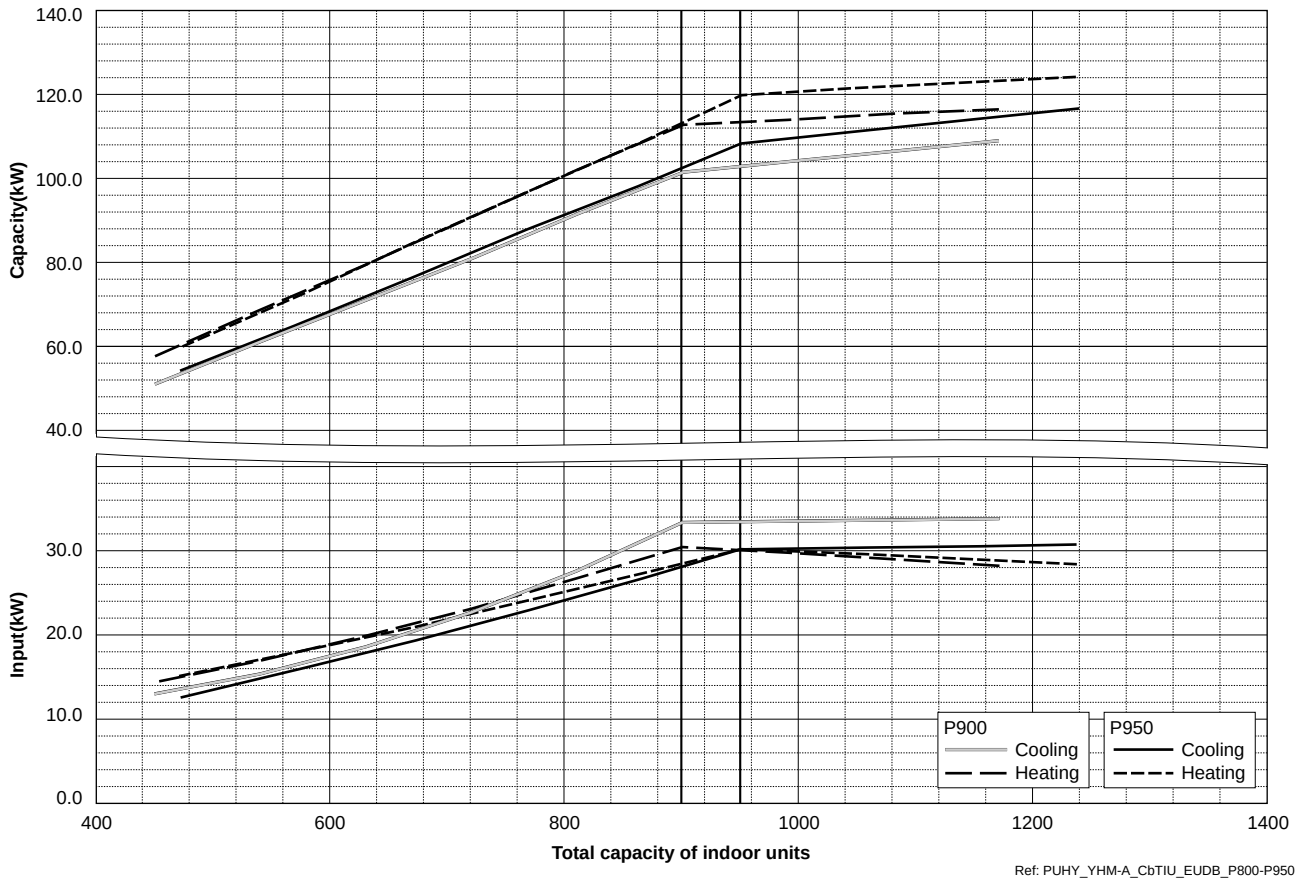

Ref: PUHY_YHM-A_CbTIU_EUDB_P800-P950

Y

PUHY-P1000,1050YSHM-A

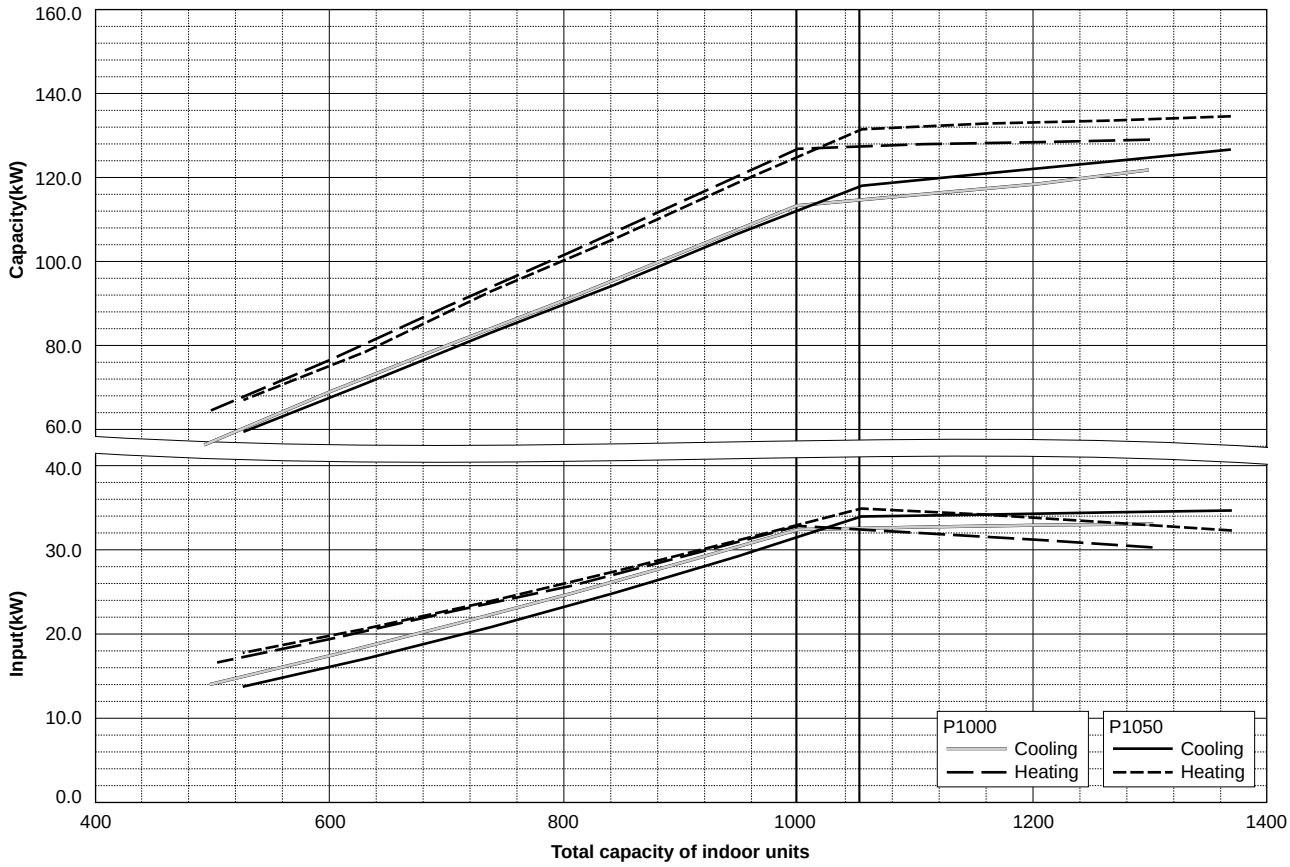

PUHY-P1100,1150YSHM-A

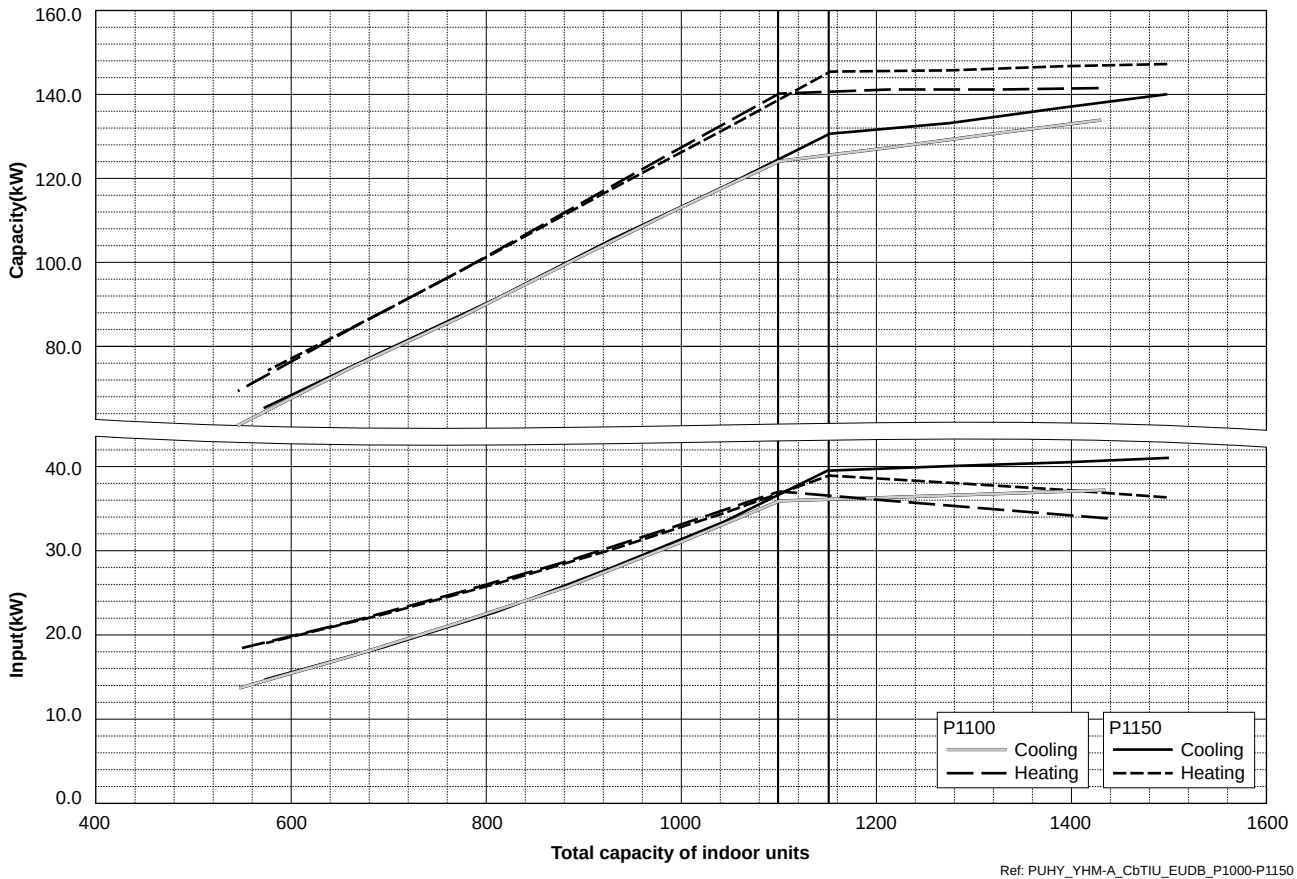

Ref: PUHY_YHM-A_CbTIU_EUDB_P1000-P1150

Y

PUHY-P1200,1250YSHM-A

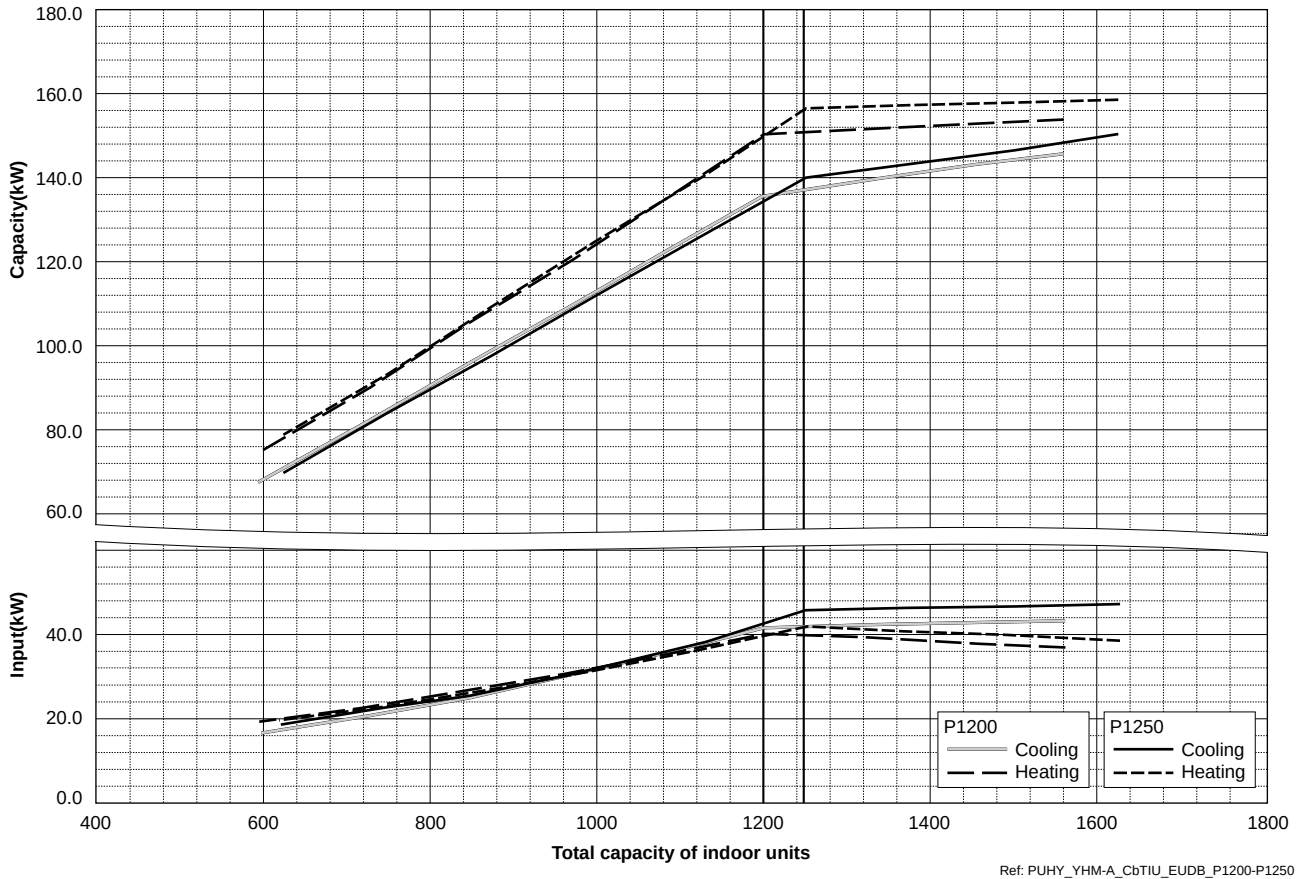

Ref: PUHY_YHM-A_CbTIU_EUDB_P1200-P1250

6-3. Correction by refrigerant piping length

CITY MULTI system can extend the piping flexibly within its limitation for the actual situation. Yet, a decrease of cooling/heating capacity could happen correspondently. Using following correction factor according to the equivalent length of the piping shown at 6-3-1 and 6-3-2, the capacity can be observed. 6-3-3 shows how to obtain the equivalent length of piping.

6-3-1. Cooling capacity correction

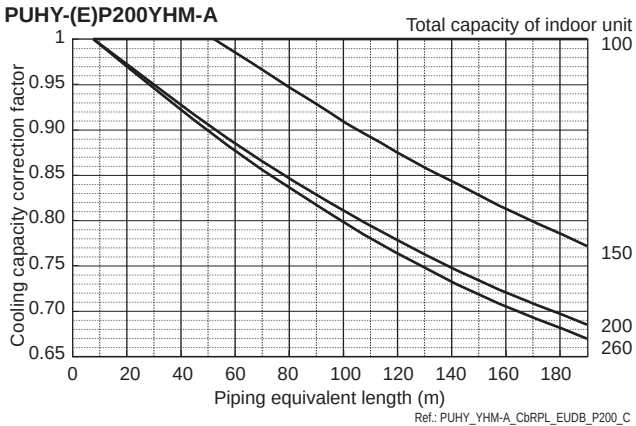

Ref.: PUHY_YHM-A_CbRPL_EUDB_P200_C

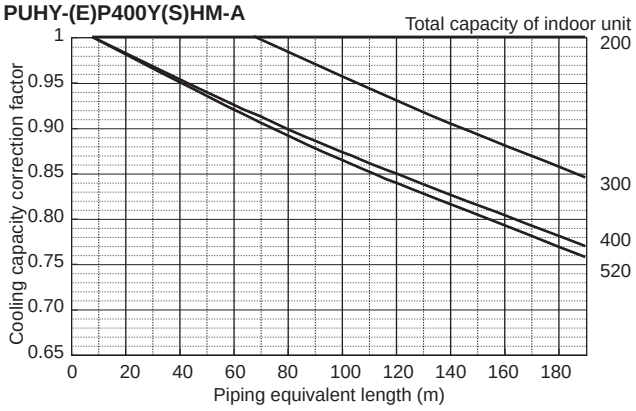

Ref.: PUHY_YHM-A_CbRPL_EUDB_P400_C

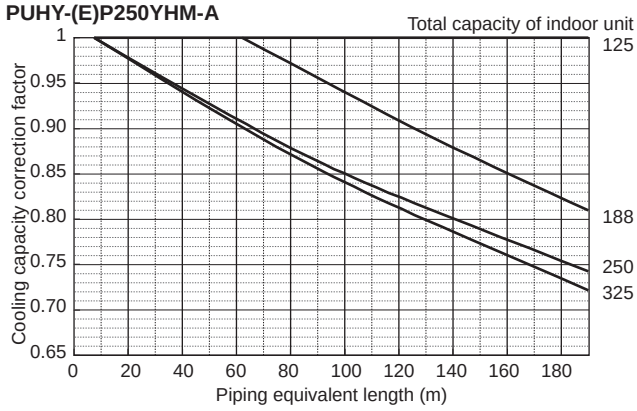

Ref.: PUHY_YHM-A_CbRPL_EUDB_P250_C

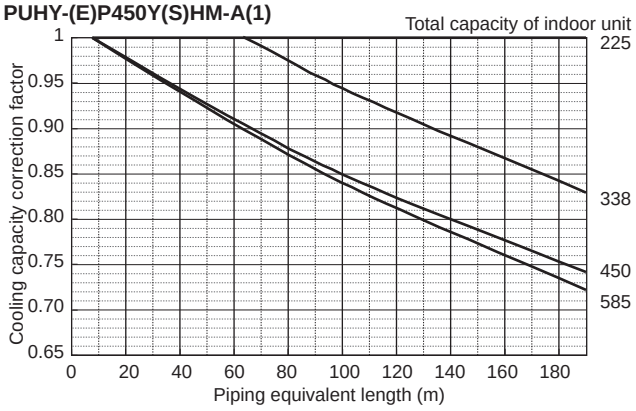

Ref.: PUHY_YHM-A_CbRPL_EUDB_P450_C

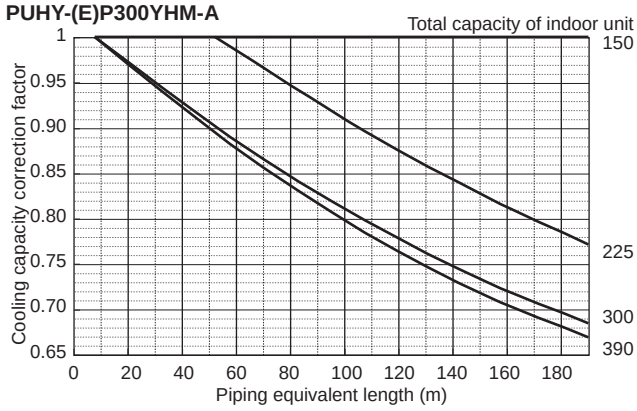

Ref.: PUHY_YHM-A_CbRPL_EUDB_P300_C

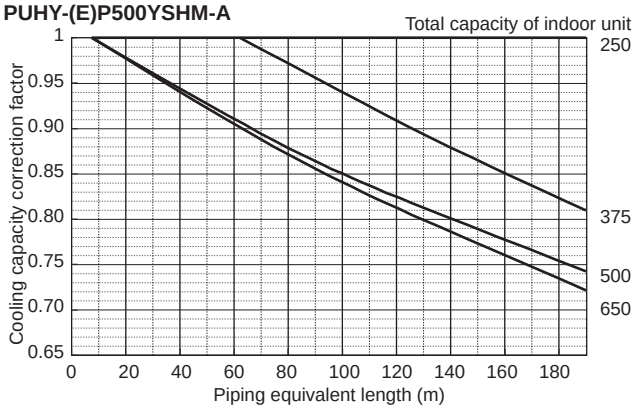

Ref.: PUHY_YHM-A_CbRPL_EUDB_P500_C

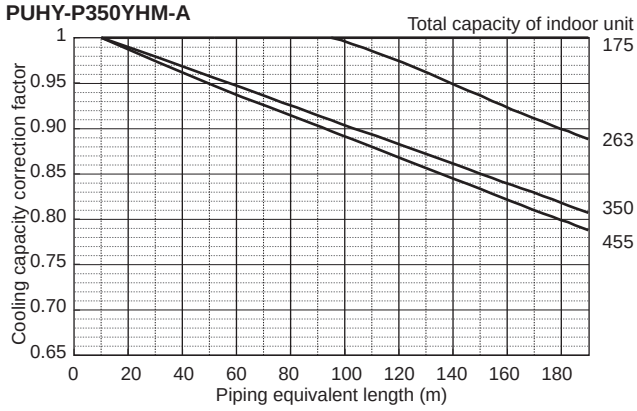

Ref.: PUHY_YHM-A_CbRPL_EUDB_P350_C

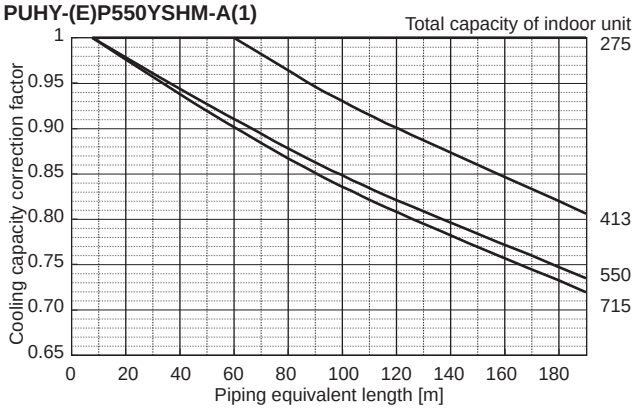

Ref.: PUHY_YHM-A_CbRPL_EUDB_P550_C

Y

PUHY-(E)P600YSHM-A

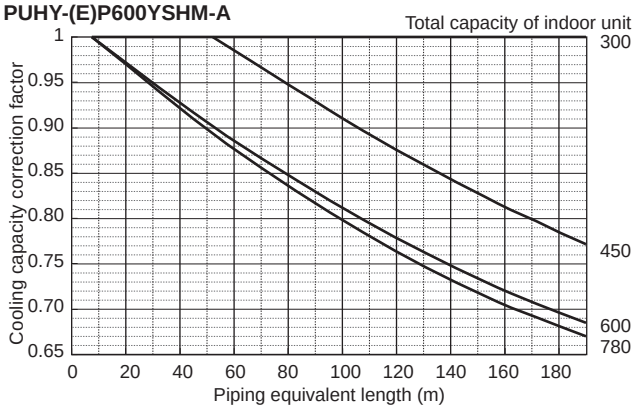

Ref.: PUHY_YHM-A_CbRPL_EUDB_P600_C

PUHY-(E)P800YSHM-A

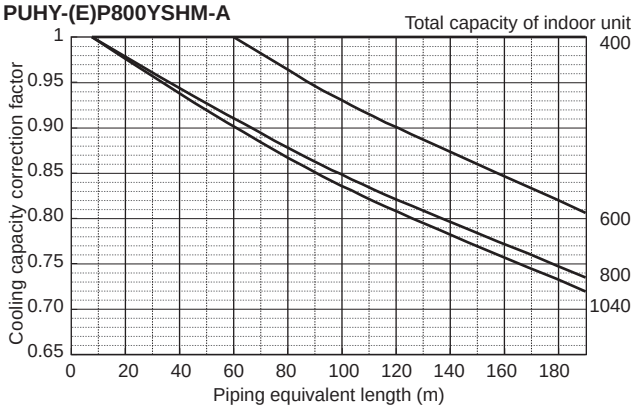

Ref.: PUHY_YHM-A_CbRPL_EUDB_P800_C

PUHY-(E)P650YSHM-A

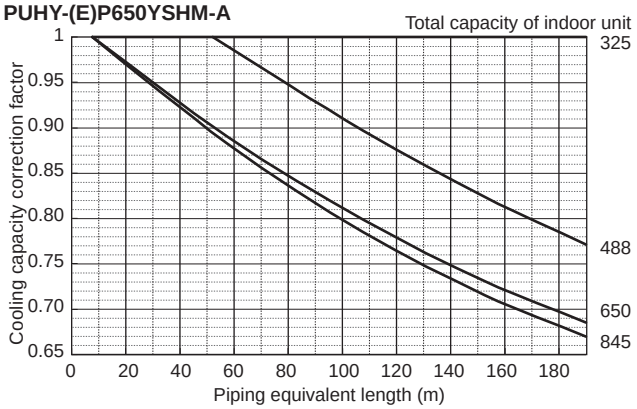

Ref.: PUHY_YHM-A_CbRPL_EUDB_P650_C

PUHY-(E)P850YSHM-A(1)

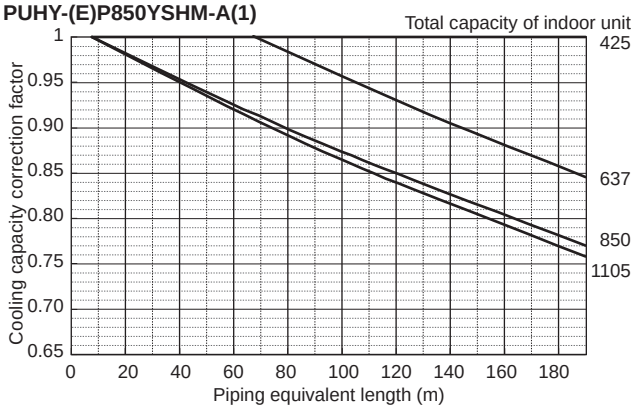

Ref.: PUHY_YHM-A_CbRPL_EUDB_P850_C

PUHY-(E)P700YSHM-A

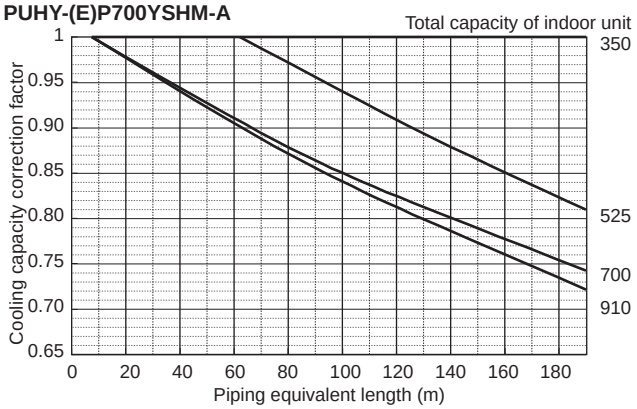

Ref.: PUHY_YHM-A_CbRPL_EUDB_P700_C

PUHY-(E)P900YSHM-A

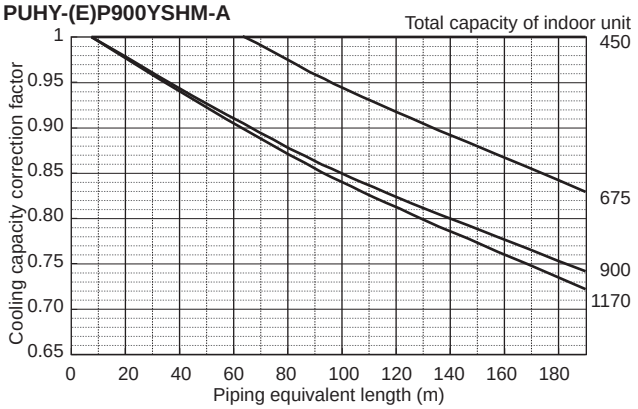

Ref.: PUHY_YHM-A_CbRPL_EUDB_P900_C

PUHY-(E)P750YSHM-A(1)

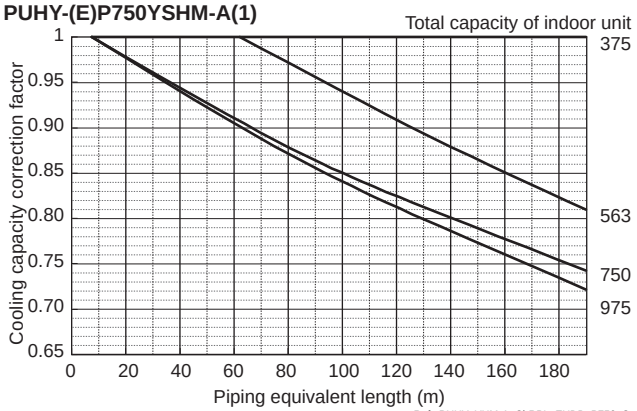

Ref.: PUHY_YHM-A_CbRPL_EUDB_P750_C

PUHY-P950YSHM-A

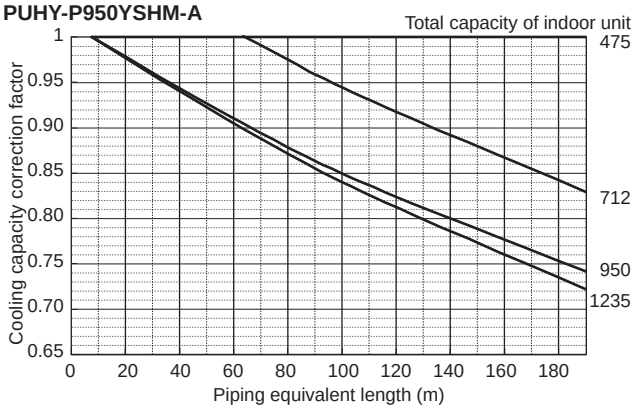

Ref.: PUHY_YHM-A_CbRPL_EUDB_P950_C

Y

PUHY-P1000YSHM-A

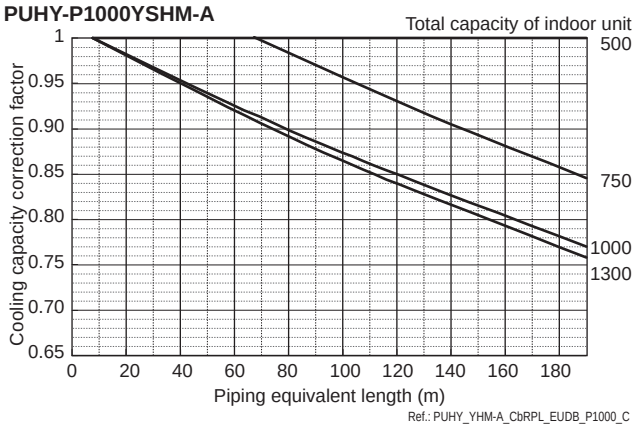

Ref.: PUHY_YHM-A_CbRPL_EUDB_P1000_C

PUHY-P1150YSHM-A

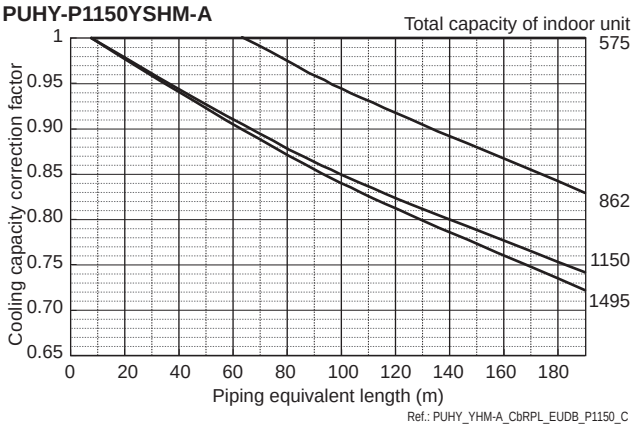

Ref.: PUHY_YHM-A_CbRPL_EUDB_P1150_C

PUHY-P1050YSHM-A

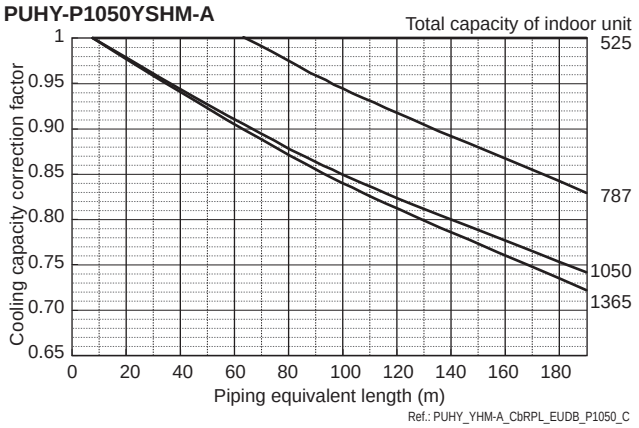

Ref.: PUHY_YHM-A_CbRPL_EUDB_P1050_C

PUHY-P1200YSHM-A

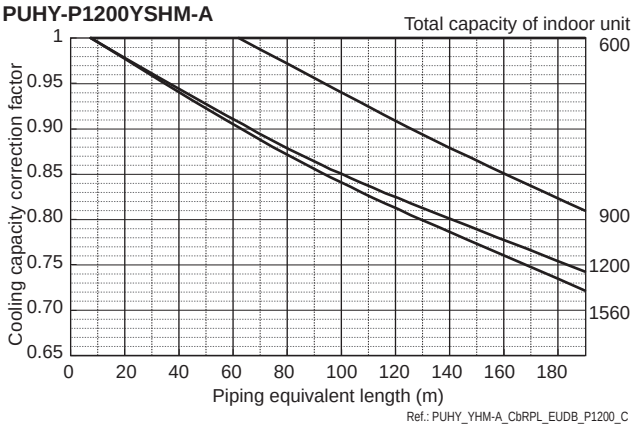

Ref.: PUHY_YHM-A_CbRPL_EUDB_P1200_C

PUHY-P1100YSHM-A

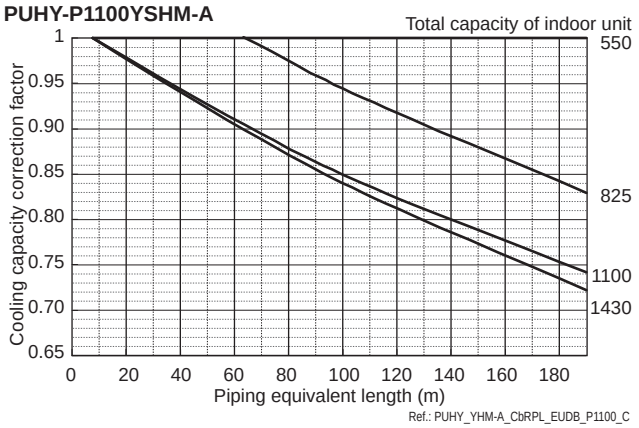

Ref.: PUHY_YHM-A_CbRPL_EUDB_P1100_C

PUHY-P1250YSHM-A

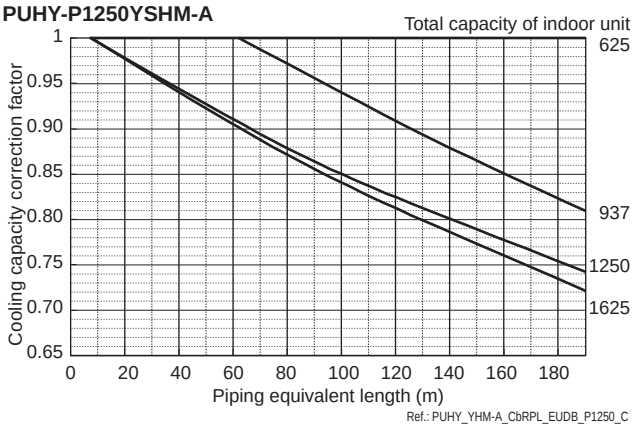

Ref.: PUHY_YHM-A_CbRPL_EUDB_P1250_C

6-3-2. Heating capacity correction

PUHY-(E)P200,250YHM-A

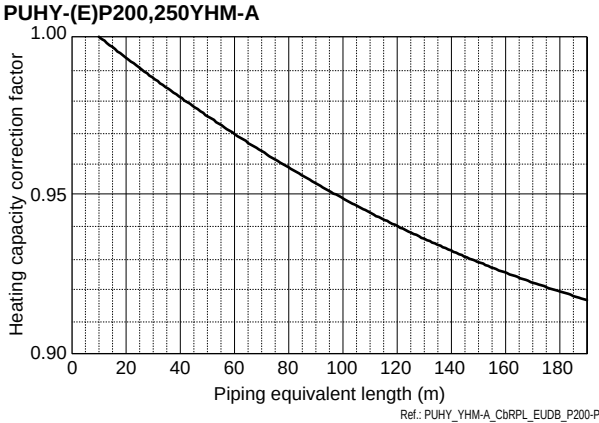

Ref.: PUHY_YHM-A_CbRPL_EUDB_P200-P250_H

PUHY-(E)P700,750,800YSHM-A(1)

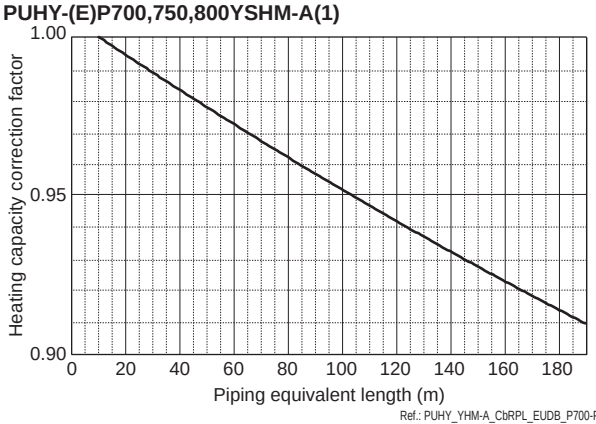

Ref.: PUHY_YHM-A_CbRPL_EUDB_P700-P800_H

PUHY-(E)P300,350,400,450Y(S)HM-A(1)

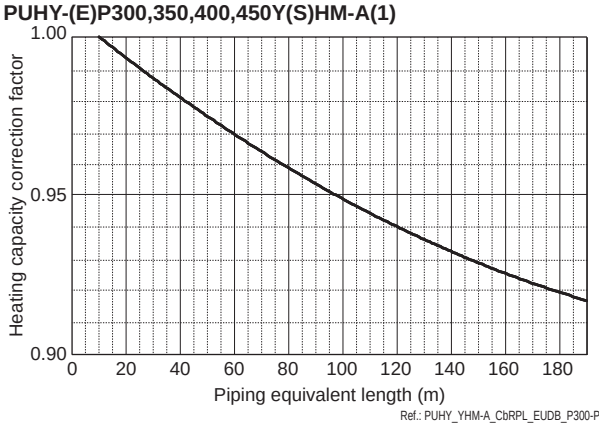

Ref.: PUHY_YHM-A_CbRPL_EUDB_P300-P450_H

PUHY-(E)P500,550,600,650YSHM-A(1)

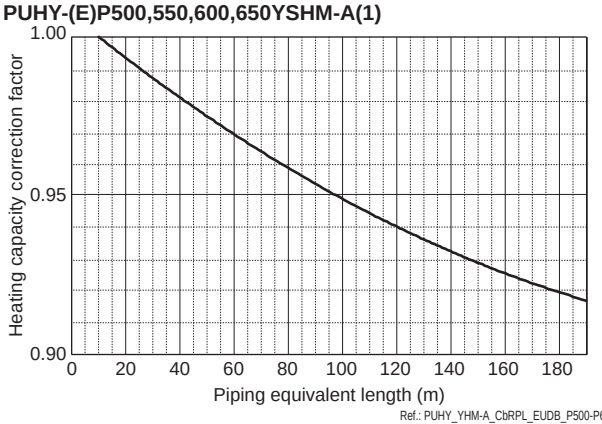

Ref.: PUHY_YHM-A_CbRPL_EUDB_P500-P650_H

PUHY-(E)P850,900,950,1000YSHM-A(1)

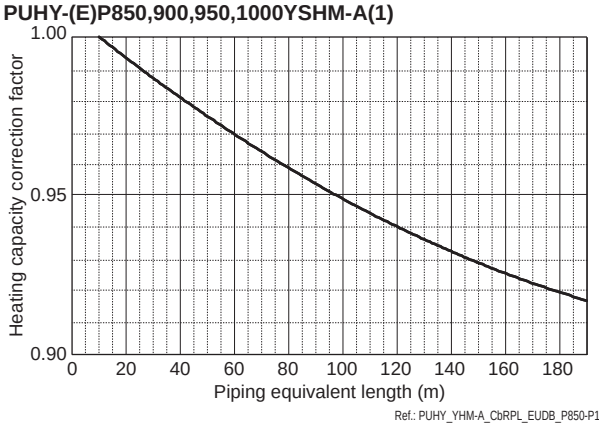

Ref.: PUHY_YHM-A_CbRPL_EUDB_P850-P1000_H

PUHY-P1050,1100,1150,1200,1250YSHM-A

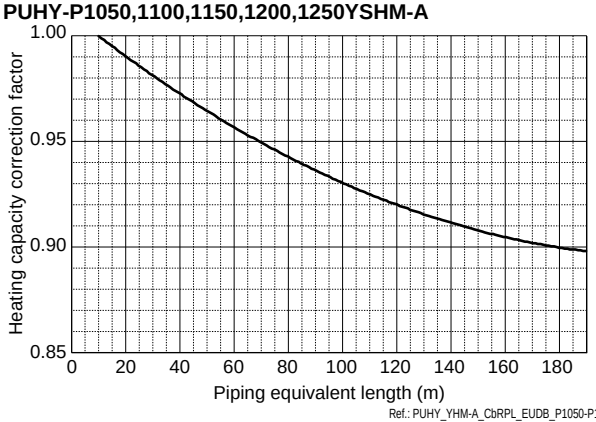

Ref.: PUHY_YHM-A_CbRPL_EUDB_P1050-P1250_H

6-3-3. How to obtain the equivalent piping length

1 **PUHY-(E)P200YHM**
Equivalent length = (Actual piping length to the farthest indoor unit) + (0.35 x number of bends in the piping) m

2 **PUHY-(E)P250,300YHM**
Equivalent length = (Actual piping length to the farthest indoor unit) + (0.42 x number of bends in the piping) m

3 **PUHY-P350YHM**
Equivalent length = (Actual piping length to the farthest indoor unit) + (0.47 x number of bends in the piping) m

4 **PUHY-(E)P400,450,500,550,600,650Y(S)HM**
Equivalent length = (Actual piping length to the farthest indoor unit) + (0.50 x number of bends in the piping) m

5 **PUHY-(E)P700,750,800YSHM**
Equivalent length = (Actual piping length to the farthest indoor unit) + (0.70 x number of bends in the piping) m

6 **PUHY-(E)P850,900,950,1000,1050,1100,1150,1200,1250YSHM**
Equivalent length = (Actual piping length to the farthest indoor unit) + (0.80 x number of bends in the piping) m

Ref: PUHY_YHM-A_EqPLTH_EUDB_ALL

6-4. Correction at frost and defrost

Due to frost at the outdoor heat exchanger and the automatic defrost operation, the heating capacity of the outdoor unit can be calculated by multiplying the correction factor shown in the table below.

Y

Table of correction factor at frost and defrost

Outdoor inlet air temp. °C	6	4	2	1	0	-2	-4	-6	-8	-10	-20
Outdoor inlet air temp. °F	43	39	36	34	32	28	25	21	18	14	-4
PUHY-(E)P200YHM	1.00	0.95	0.84	0.83	0.83	0.87	0.90	0.95	0.95	0.95	0.95
PUHY-(E)P250YHM	1.00	0.95	0.84	0.83	0.83	0.87	0.90	0.95	0.95	0.95	0.95
PUHY-(E)P300YHM	1.00	0.93	0.82	0.80	0.82	0.86	0.90	0.90	0.95	0.95	0.95
PUHY-P350YHM	1.00	0.93	0.85	0.83	0.84	0.86	0.90	0.90	0.95	0.95	0.95
PUHY-(E)P400YHM	1.00	0.95	0.90	0.87	0.88	0.89	0.90	0.95	0.95	0.95	0.95
PUHY-(E)P450YHM	1.00	0.98	0.89	0.87	0.89	0.90	0.92	0.95	0.95	0.95	0.95
PUHY-(E)P500YSHM	1.00	0.98	0.89	0.86	0.89	0.90	0.92	0.95	0.95	0.95	0.95
PUHY-(E)P550YSHM	1.00	0.94	0.87	0.86	0.87	0.88	0.90	0.90	0.93	0.93	0.93
PUHY-(E)P600YSHM	1.00	0.94	0.84	0.86	0.87	0.88	0.90	0.90	0.93	0.93	0.93
PUHY-(E)P650YSHM	1.00	0.94	0.84	0.86	0.87	0.88	0.90	0.90	0.93	0.93	0.93
PUHY-(E)P700YSHM	1.00	0.98	0.89	0.88	0.89	0.90	0.92	0.95	0.95	0.95	0.95
PUHY-(E)P750YSHM	1.00	0.98	0.89	0.88	0.89	0.90	0.92	0.95	0.95	0.95	0.95
PUHY-(E)P800YSHM	1.00	0.98	0.89	0.88	0.89	0.90	0.92	0.95	0.95	0.95	0.95
PUHY-(E)P850YSHM	1.00	0.94	0.87	0.86	0.87	0.88	0.90	0.90	0.93	0.93	0.93
PUHY-(E)P900YSHM	1.00	0.94	0.87	0.86	0.87	0.88	0.90	0.90	0.93	0.93	0.93
PUHY-P950YSHM	1.00	0.94	0.87	0.86	0.87	0.88	0.90	0.90	0.93	0.93	0.93
PUHY-P1000YSHM	1.00	0.94	0.87	0.86	0.87	0.88	0.90	0.90	0.93	0.93	0.93
PUHY-P1050YSHM	1.00	0.94	0.87	0.86	0.87	0.88	0.90	0.90	0.93	0.93	0.93
PUHY-P1100YSHM	1.00	0.94	0.87	0.86	0.87	0.88	0.90	0.90	0.93	0.93	0.93
PUHY-P1150YSHM	1.00	0.94	0.87	0.86	0.87	0.88	0.90	0.90	0.93	0.93	0.93
PUHY-P1200YSHM	1.00	0.94	0.87	0.86	0.87	0.88	0.90	0.90	0.93	0.93	0.93
PUHY-P1250YSHM	1.00	0.94	0.87	0.86	0.87	0.88	0.90	0.90	0.93	0.93	0.93

Ref: PUHY_YHM-A_CbFROST_EUDB_ALL

6-5. Operation temperature range

• **Cooling**

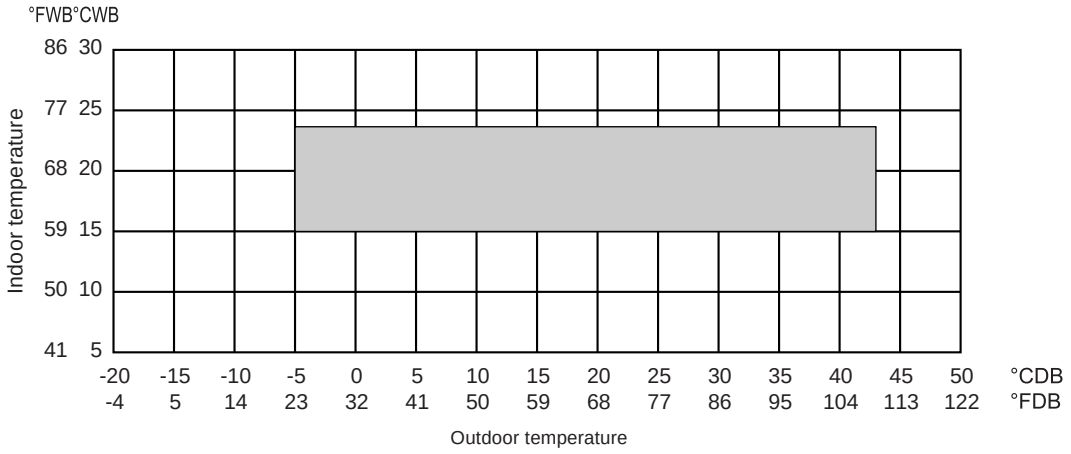

• **Heating**

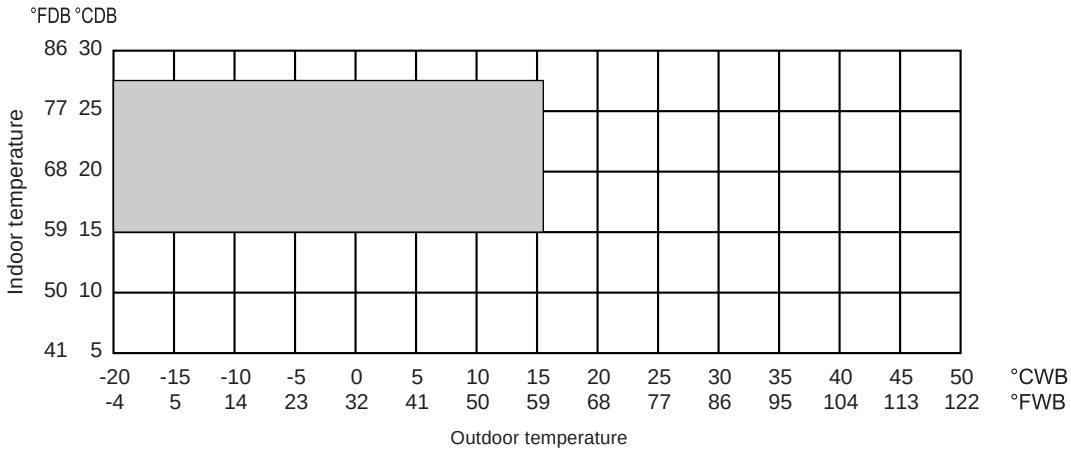

Ref.: PUHY_YHM-A_TMPRNG_EUDB_ALL

7-1. JOINT

Piping for CITY MULTI can be easily done with Joints and headers provided by MITSUBISHI ELECTRIC CORP.
There are 4 sets of Joints selectable for piping. Details for applying the Joint sets are referable to System Design 3, or their own Installation Manual.

CMY-Y102S-G2

Ref.: CMY_Y102S_G2_EXD_EUDB_SI
mm

For Gas pipe:

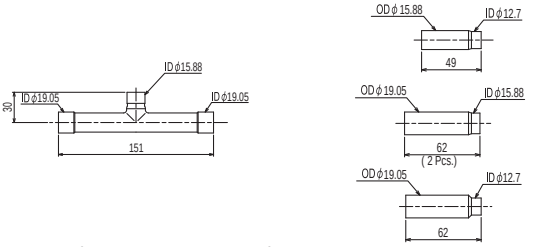

For Liquid pipe:

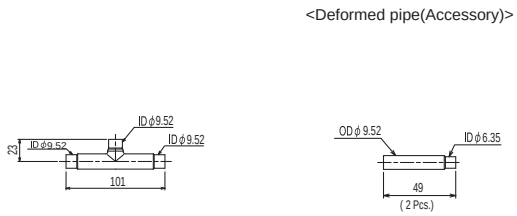

ID: Inner Diameter OD: Outer Diameter

CMY-Y102L-G2

Ref.: CMY_Y102L_G2_EXD_EUDB_SI
mm

For Gas pipe:

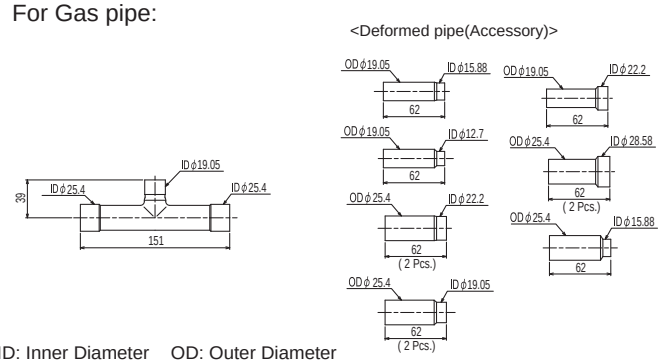

For Liquid pipe:

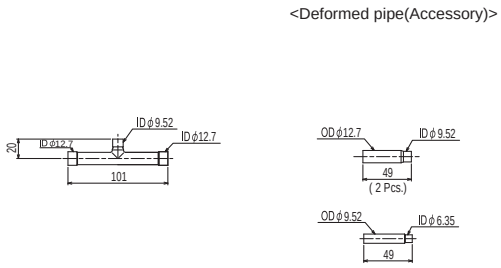

ID: Inner Diameter OD: Outer Diameter

CMY-Y202-G2

Ref.: CMY_Y202_G2_EXD_EUDB_SI
mm

For Gas pipe:

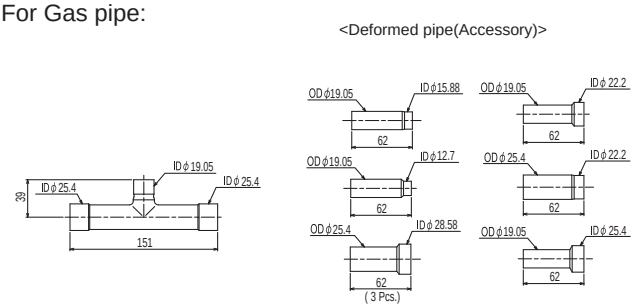

For Liquid pipe:

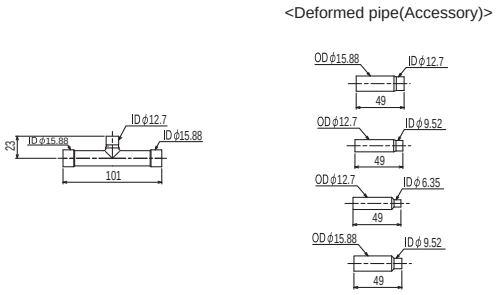

ID: Inner Diameter OD: Outer Diameter

CMY-Y302-G2

Ref.: CMY_Y302_G2_EXD_EUDB_SI
mm

For Gas pipe:

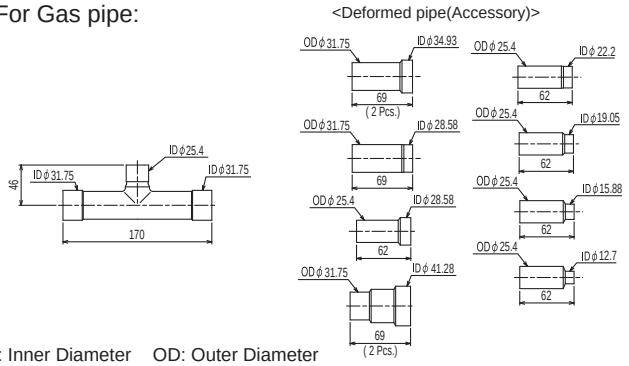

For Liquid pipe:

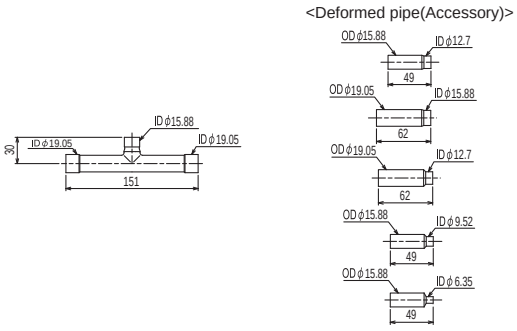

ID: Inner Diameter OD: Outer Diameter

7-2. HEADER

Piping for CITY MULTI can be easily done with Joints and Headers provided by MITSUBISHI ELECTRIC CORP.
There are 3 sets of Headers selectable for piping. Details for applying the Header sets are referable to System Design 3, or their own Installation Manual.

CMY-Y104-G

Ref.: CMY_Y104-G_EXD_EUDB_SI.
mm

For Gas pipe:

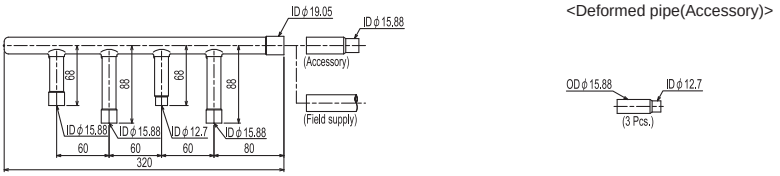

For Liquid pipe:

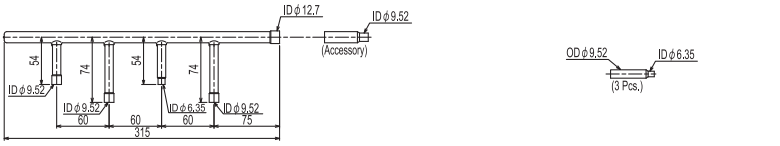

ID: Inner Diameter OD: Outer Diameter
NOTE: Besides above mentioned accessories, caps for pipe of φ6.35, φ9.52, φ12.7, φ15.88 (each diameter 1 piece) are included in the Header set.

CMY-Y108-G

Ref.: CMY_Y108-G_EXD_EUDB_SI
mm

For Gas pipe:

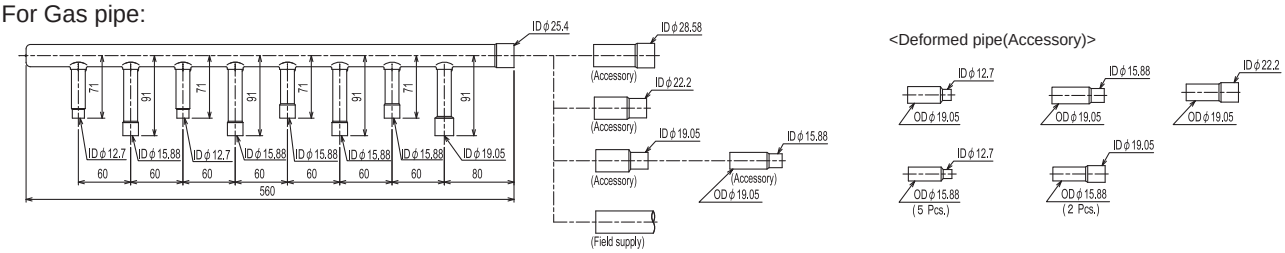

For Liquid pipe:

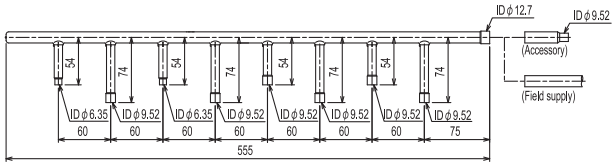

ID: Inner Diameter OD: Outer Diameter
NOTE: Besides above mentioned accessories, caps for pipe of φ6.35, φ9.52, φ12.7, φ15.88 (each diameter 2 pieces) and 1 cap for pipe of φ19.05 are included in the Header set.

CMY-Y1010-G

Ref.: CMY_Y1010-G_EXD_EUDB_SI
mm

For Gas pipe:

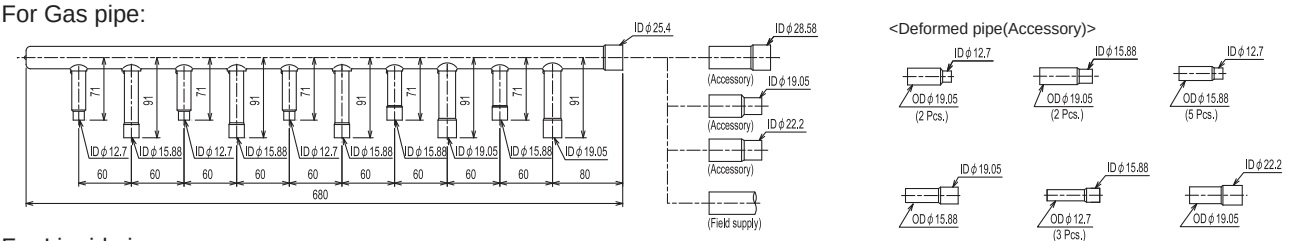

For Liquid pipe:

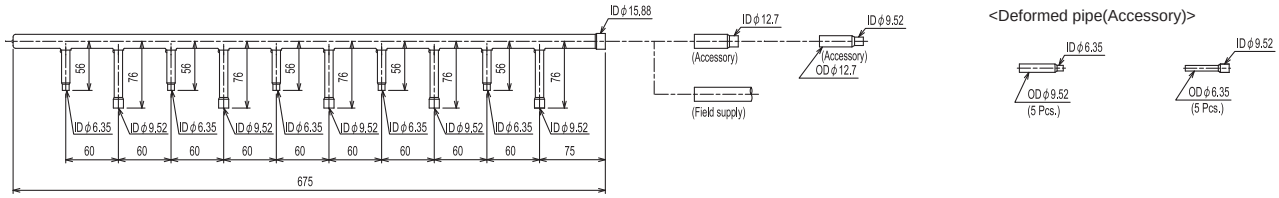

ID: Inner Diameter OD: Outer Diameter
NOTE: Besides above mentioned accessories, caps for pipe of φ6.35, φ9.52, φ12.7, φ15.88 (each diameter 2 pieces) and 1 cap for pipe of φ19.05 are included in the Header set.

7-3. OUTDOOR TWINNING KIT

For PUHY-(E)P-YSHM, following optional Outdoor Twinning Kit is needed to use to combine to refrigerant flows of its PUHY-(E)P-YHM. Details of selecting the proper kit should be referred to the System Design Section.

CMY-Y100VBK2

mm

For Gas pipe:

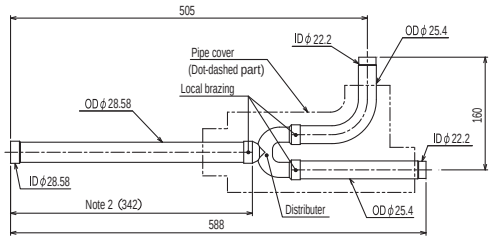

For Liquid pipe:

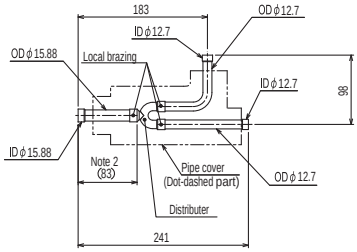

<Deformed pipe(Accessory)>

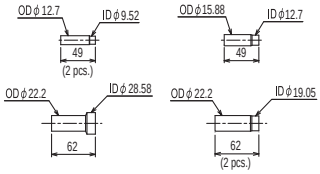

ID: Inner Diameter OD: Outer Diameter

CMY-Y200VBK2

Ref.: CMY_Y200VBK2_EXD_EUDB_SI

mm

For Gas pipe:

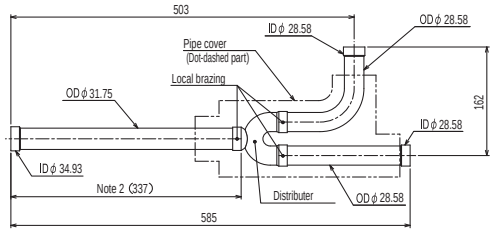

For Liquid pipe:

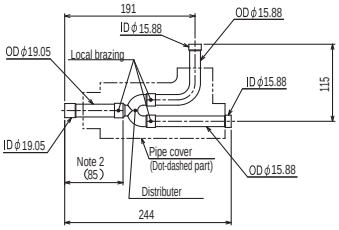

<Deformed pipe(Accessory)>

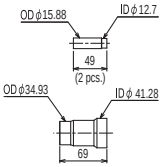

ID: Inner Diameter OD: Outer Diameter

CMY-Y300VBK2

Ref.: CMY_Y300VBK2_EXD_EUDB_SI

mm

For Gas pipe:

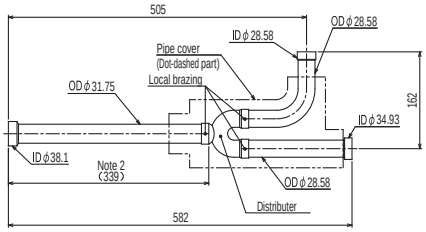

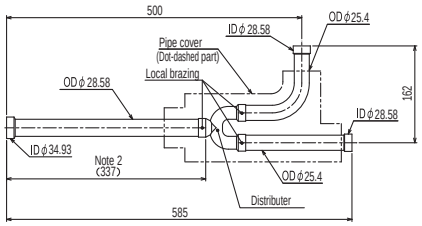

For Liquid pipe:

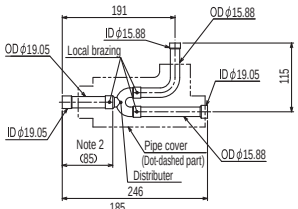

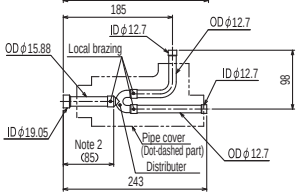

<Deformed pipe(Accessory)>

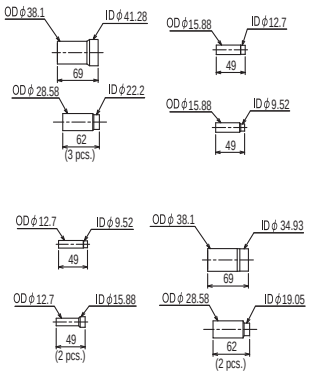

ID: Inner Diameter OD: Outer Diameter

Note 1. Reference the attitude angle of the branch pipe below the fig.

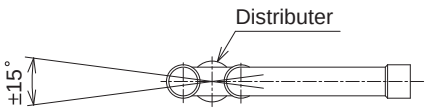

The angle of the branch pipe is within ±15° against the horizontal plane.

2. Use the attached pipe to braze the port-opening of the distributer.
3. Pipe diameter is indicated by inside diameter.

OUTDOOR UNITS

1. SPECIFICATIONS ..... 2 - 86
2. EXTERNAL DIMENSIONS ..... 2 - 99
3. CENTER OF GRAVITY ..... 2 - 109
4. ELECTRICAL WIRING DIAGRAMS ..... 2 - 110
5. SOUND LEVELS ..... 2 - 111
6. CAPACITY TABLES ..... 2 - 115
   6-1. Correction by temperature ..... 2 - 115
   6-2. Correction by total indoor ..... 2 - 120
   6-3. Correction by refrigerant piping length ..... 2 - 124
   6-4. Correction at frost and defrost ..... 2 - 127
   6-5. Operation temperature range ..... 2 - 128
7. OPTIONAL PARTS ..... 2 - 129
   7-1. JOINT ..... 2 - 129
   7-2. HEADER ..... 2 - 130
   7-3. OUTDOOR TWINNING KIT ..... 2 - 131

1. SPECIFICATIONS

Y(HIGH COP)

Model			PUHY-EP200YHM-A(-BS)	PUHY-EP250YHM-A(-BS)
Power source			3-phase 4-wire 380-400-415V 50/60Hz	3-phase 4-wire 380-400-415V 50/60Hz
Cooling capacity (Nominal)	*1	kW	22.4	28.0
	*1	kcal / h	19,300	24,100
	*1	Btu / h	76,400	95,500
	*2	kcal / h	20,000	25,000
	Power input	kW	5.18	6.82
	Current input	A	8.7-8.3-8.0	11.5-10.9-10.5
	COP (kW / kW)		4.32	4.10
Temp. range of cooling	Indoor	W.B.	15 to 24degC (59 to 75degF)	15 to 24degC (59 to 75degF)
	Outdoor	D.B.	- 5 to 43degC (23 to 109degF)	- 5 to 43degC (23 to 109degF)
Heating capacity (Nominal)	*3	kW	25.0	31.5
	*3	kcal / h	21,500	27,100
	*3	Btu / h	85,300	107,500
	Power input	kW	5.77	7.59
	Current input	A	9.7-9.2-8.9	12.8-12.1-11.7
	COP (kW / kW)		4.33	4.15
Temp. range of heating	Indoor temp.	D.B.	15 to 27degC (59 to 81degF)	15 to 27degC (59 to 81degF)
	Outdoor temp.	W.B.	-20 to 15.5degC (-4 to 60degF)	-20 to15.5degC (-4 to 60degF)
Indoor unit connectable	Total capacity		50 - 130% of outdoor unit capacity	50 - 130% of outdoor unit capacity
	Model / Quantity		P15 - P250/1 - 17	P15 - P250/1 - 21
Sound pressure level (measured in anechoic room)		dB <A>	57	60
Diameter of refrigerant pipe	Liquid	mm (in.)	9.52 (3/8) Brazed	9.52 (3/8) Brazed (12.7 (1/2) Brazed,total length>=90m)
	Gas	mm (in.)	19.05 (3/4) Brazed	22.2(7/8) Brazed

External finish			Pre-coated galvanized steel sheets (+powder coating for -BS type)	Pre-coated galvanized steel sheets (+powder coating for -BS type)
			<MUNSELL 5Y 8/1 or similar>	<MUNSELL 5Y 8/1 or similar>
External dimension H x W x D		mm	1,710(without legs 1,650)x920x760	1,710(without legs 1,650)x1220x760
		in.	67-3/8(without legs 65)x36-1/4x29-15/16	67-3/8(without legs 65)x48-1/16x29-15/16
Net weight		kg (lb)	200 (441)	245 (541)
Heat exchanger			Salt-resistant cross fin & copper tube	Salt-resistant cross fin & copper tube
Compressor	Type		Inverter scroll hermetic compressor	Inverter scroll hermetic compressor
	Manufacture		MITSUBISHI ELECTRIC CORPORATION	MITSUBISHI ELECTRIC CORPORATION
	Starting method		Inverter	Inverter
	Motor output	kW	5.4	6.7
	Case heater	kW	0.035	0.045
	Lubricant		MEL32	MEL32
FAN	Air flow rate	m^3 / min	185	225
		L / s	3,083	3,750
		cfm	6,532	7,945
	External static press.	*4	0 Pa (0mmH_2O)	0 Pa (0mmH_2O)
	Type x Quantity		Propeller fan x 1	Propeller fan x 1
	Control, Driving mechanism		Inverter-control, Direct-driven by motor	Inverter-control, Direct-driven by motor
	Motor output	kW	0.46 x 1	0.46 x 1
HIC circuit (HIC: Heat Inter-Changer)			Copper pipe,tube-in-tube structure	Copper pipe,tube-in-tube structure
Protection	High pressure protection		High pres. Sensor & High pres. Switch at 4.15 MPa (601psi)	High pres. Sensor & High pres. Switch at 4.15 MPa (601psi)
	Inverter circuit (COMP. / FAN)		Over-heat protection, Over-current protection	Over-heat protection, Over-current protection
	Compressor		Over-heat protection	Over-heat protection
	Fan motor		Thermal switch	Thermal switch
Defrosting method			Auto-defrost mode (Reversed refrigerant circle)	Auto-defrost mode (Reversed refrigerant circle)
Refrigerant	Type x original charge		R410A x 9.0 kg (20lb)	R410A x 11.5 kg (26lb)
	Control		LEV and HIC circuit	LEV and HIC circuit
Drawing	External		KB94G545	KB94T270
	Wiring		KE94C140	KE94C319
Standard attachment	Document		Installation Manual	Installation Manual
	Accessory		Refrigerant conn. pipe	Refrigerant conn. pipe
Optional parts			joint :CMY-Y102S-G2 Header :CMY-Y104/108/1010-G	joint :CMY-Y102S/L-G2 Header :CMY-Y104/108/1010-G
Remarks			*Details on foundation work, duct work, insulation work, electrical wiring, power source switch, and other items shall be referred to the Installation Manual. *Due to continuing improvement, above specifications may be subject to change without notice.	

Notes :	*1 Nominal cooling conditions	*2 Nominal cooling conditions	*3 Nominal heating conditions	Unit converter
Indoor :	27degCDB/19degCWB (81degFDB/66degFWB)	27degCDB/19.5degCWB (81degFDB/67degFWB)	20degCDB(68degFDB)	kcal = kW x 860
Outdoor :	35degCDB(95degFDB)	35degCDB(95degFDB)	7degCDB/6degCWB (45degFDB/43degFWB)	Btu/h = kW x 3,412
Pipe length :	7.5m(24-9/16ft)	5m(16-3/8ft)	7.5m(24-9/16ft)	cfm = m^3/min x 35.31
Level difference :	0m(0ft)	0m(0ft)	0m(0ft)	lb = kg/0.4536
*Nominal condition *1,*3 are subject to JIS B8615-1				*Above specification data is subject to rounding variation.
*4 External static pressure option is available (30Pa, 60Pa/3.1mmH_2O, 6.1mmH_2O)				

1. SPECIFICATIONS

Model			PUHY-EP300YHM-A(-BS)
Power source			3-phase 4-wire 380-400-415V 50/60Hz
Cooling capacity (Nominal)	*1	kW	33.5
	*1	kcal / h	28,800
	*1	Btu / h	114,300
	*2	kcal / h	30,000
	Power input	kW	8.25
	Current input	A	13.9-13.2-12.7
	COP (kW / kW)		4.06
Temp. range of cooling	Indoor	W.B.	15 to 24degC (59 to 75degF)
	Outdoor	D.B.	- 5 to 43degC (23 to 109degF)
Heating capacity (Nominal)	*3	kW	37.5
	*3	kcal / h	32,300
	*3	Btu / h	128,000
	Power input	kW	9.28
	Current input	A	15.6-14.8-14.3
	COP (kW / kW)		4.04
Temp. range of heating	Indoor temp.	D.B.	15 to 27degC (59 to 81degF)
	Outdoor temp.	W.B.	-20 to 15.5degC (-4 to 60degF)
Indoor unit connectable	Total capacity		50 - 130% of outdoor unit capacity
	Model / Quantity		P15 - P250/1 - 26
Sound pressure level (measured in anechoic room)		dB <A>	60
Diameter of refrigerant pipe	Liquid	mm (in.)	9.52 (3/8) Brazed (12.7 (1/2) Brazed,total length>=40m)
	Gas	mm (in.)	22.2(7/8) Brazed

External finish			Pre-coated galvanized steel sheets (+powder coating for -BS type)
			<MUNSELL 5Y 8/1 or similar>
External dimension H x W x D		mm	1,710(without legs 1,650)x1220x760
		in.	67-3/8(without legs 65)x48-1/16x29-15/16
Net weight		kg (lb)	245 (541)
Heat exchanger			Salt-resistant cross fin & copper tube
Compressor	Type		Inverter scroll hermetic compressor
	Manufacture		MITSUBISHI ELECTRIC CORPORATION
	Starting method		Inverter
	Motor output	kW	8.3
	Case heater	kW	0.045
	Lubricant		MEL32
FAN	Air flow rate	m^3 / min	225
		L / s	3,750
		cfm	7,945
	External static press.	*4	0 Pa (0mmH_2O)
	Type x Quantity		Propeller fan x 1
	Control, Driving mechanism		Inverter-control, Direct-driven by motor
	Motor output	kW	0.46 x 1
HIC circuit (HIC: Heat Inter-Changer)			Copper pipe,tube-in-tube structure
Protection	High pressure protection		High pres. Sensor & High pres. Switch at 4.15 MPa (601psi)
	Inverter circuit (COMP. / FAN)		Over-heat protection, Over-current protection
	Compressor		Over-heat protection
	Fan motor		Thermal switch
Defrosting method			Auto-defrost mode (Reversed refrigerant circle)
Refrigerant	Type x original charge		R410A x 11.5 kg (26lb)
	Control		LEV and HIC circuit
Drawing	External		KB94G546
	Wiring		KE94C140
Standard attachment	Document		Installation Manual
	Accessory		Refrigerant conn. pipe
Optional parts			joint :CMY-Y102S/L-G2 Header :CMY-Y104/108/1010-G
Remarks			*Details on foundation work, duct work, insulation work, electrical wiring, power source switch, and other items shall be referred to the Installation Manual. *Due to continuing improvement, above specifications may be subject to change without notice.

Notes :	*1 Nominal cooling conditions	*2 Nominal cooling conditions	*3 Nominal heating conditions	Unit converter
Indoor :	27degCDB/19degCWB (81degFDB/66degFWB)	27degCDB/19.5degCWB (81degFDB/67degFWB)	20degCDB(68degFDB)	kcal = kW x 860
Outdoor :	35degCDB(95degFDB)	35degCDB(95degFDB)	7degCDB/6degCWB (45degFDB/43degFWB)	Btu/h = kW x 3,412
Pipe length :	7.5m(24-9/16ft)	5m(16-3/8ft)	7.5m(24-9/16ft)	cfm = m^3/min x 35.31
Level difference :	0m(0ft)	0m(0ft)	0m(0ft)	lb = kg/0.4536
*Nominal condition *1,*3 are subject to JIS B8615-1				*Above specification data is subject to rounding variation.
*4 External static pressure option is available (30Pa, 60Pa/3.1mmH_2O, 6.1mmH_2O)				

1. SPECIFICATIONS

Y(HIGH COP)

Model			PUHY-EP400YSHM-A(-BS)
Power source			3-phase 4-wire 380-400-415V 50/60Hz
Cooling capacity (Nominal)	*1	kW	45.0
	*1	kcal / h	38,700
	*1	Btu / h	153,500
	*2	kcal / h	40,000
	Power input	kW	10.41
	Current input	A	17.5-16.6-16.0
	COP (kW / kW)		4.32
Temp. range of cooling	Indoor	W.B.	15 to 24degC (59 to 75degF)
	Outdoor	D.B.	- 5 to 43degC (23 to 109degF)
Heating capacity (Nominal)	*3	kW	50.0
	*3	kcal / h	43,000
	*3	Btu / h	170,600
	Power input	kW	11.54
	Current input	A	19.4-18.5-17.8
	COP (kW / kW)		4.33
Temp. range of heating	Indoor temp.	D.B.	15 to 27degC (59 to 81degF)
	Outdoor temp.	W.B.	-20 to 15.5degC (-4 to 60degF)
Indoor unit connectable	Total capacity		50 - 130% of outdoor unit capacity
	Model / Quantity		P15 - P250/1 - 35
Sound pressure level (measured in anechoic room)		dB <A>	60
Diameter of refrigerant pipe	Liquid	mm (in.)	12.7 (1/2) Brazed
	Gas	mm (in.)	28.58(1-1/8) Brazed

Set Model

Model			PUHY-EP200YHM-A(-BS)	PUHY-EP200YHM-A(-BS)
External finish			Pre-coated galvanized steel sheets (+powder coating for -BS type)	
			<MUNSELL 5Y 8/1 or similar>	
External dimension H x W x D		mm	1,710(without legs 1,650)x920x760	1,710(without legs 1,650)x920x760
		in.	67-3/8(without legs 65)x36-1/4x29-15/16	67-3/8(without legs 65)x36-1/4x29-15/16
Net weight		kg (lb)	200 (441)	200 (441)
Heat exchanger			Salt-resistant cross fin & copper tube	Salt-resistant cross fin & copper tube
Compressor	Type		Inverter scroll hermetic compressor	Inverter scroll hermetic compressor
	Manufacture		MITSUBISHI ELECTRIC CORPORATION	
	Starting method		Inverter	Inverter
	Motor output	kW	5.4	5.4
	Case heater	kW	0.035	0.035
	Lubricant		MEL32	MEL32
FAN	Air flow rate	m^3 / min	185	185
		L / s	3,083	3,083
		cfm	6,532	6,532
	External static press.	*4	0 Pa (0mmH_2O)	0 Pa (0mmH_2O)
	Type x Quantity		Propeller fan x 1	Propeller fan x 1
	Control, Driving mechanism		Inverter-control, Direct-driven by motor	Inverter-control, Direct-driven by motor
	Motor output	kW	0.46 x 1	0.46 x 1
HIC circuit (HIC: Heat Inter-Changer)			Copper pipe,tube-in-tube structure	
Protection	High pressure protection		High pres. Sensor & High pres. Switch at 4.15 MPa (601psi)	
	Inverter circuit (COMP. / FAN)		Over-heat protection, Over-current protection	
	Compressor		Over-heat protection	
	Fan motor		Thermal switch	
Defrosting method			Auto-defrost mode (Reversed refrigerant circle)	
Refrigerant	Type x original charge		R410A x 9.0 kg (20lb)	R410A x 9.0 kg (20lb)
	Control		LEV and HIC circuit	
Pipe between unit distributor	Liquid	mm (in.)	9.52 (3/8) Brazed	9.52 (3/8) Brazed
	Gas	mm (in.)	19.05(3/4) Brazed	19.05(3/4) Brazed
Drawing	External		KB94T272	
	Wiring		KE94C140	
Standard attachment	Document		Installation Manual	
	Accessory		Refrigerant conn. pipe	
Optional parts			Outdoor Twinning Kit : CMY-Y100VBK2 joint :CMY-Y102S/L-G2,CMY-Y202-G2 Header :CMY-Y104/108/1010-G	
Remarks			*Details on foundation work, duct work, insulation work, electrical wiring, power source switch, and other items shall be referred to the Installation Manual. *Due to continuing improvement, above specifications may be subject to change without notice.	

Notes :	*1 Nominal cooling conditions	*2 Nominal cooling conditions	*3 Nominal heating conditions	Unit converter
Indoor :	27degCDB/19degCWB (81degFDB/66degFWB)	27degCDB/19.5degCWB (81degFDB/67degFWB)	20degCDB(68degFDB)	kcal = kW x 860
Outdoor :	35degCDB(95degFDB)	35degCDB(95degFDB)	7degCDB/6degCWB (45degFDB/43degFWB)	Btu/h = kW x 3,412
Pipe length :	7.5m(24-9/16ft)	5m(16-3/8ft)	7.5m(24-9/16ft)	cfm = m^3/min x 35.31
Level difference :	0m(0ft)	0m(0ft)	0m(0ft)	lb = kg/0.4536

*Nominal condition *1,*3 are subject to JIS B8615-1

*4 External static pressure option is available (30Pa, 60Pa/3.1mmH_2O, 6.1mmH_2O)

*Above specification data is subject to rounding variation.

1. SPECIFICATIONS

Model			PUHY-EP450YSHM-A1(-BS)
Power source			3-phase 4-wire 380-400-415V 50/60Hz
Cooling capacity (Nominal)	*1	kW	50.0
	*1	kcal / h	43,000
	*1	Btu / h	170,600
	*2	kcal / h	45,000
	Power input	kW	11.87
	Current input	A	20.0-19.0-18.3
	COP (kW / kW)		4.21
Temp. range of cooling	Indoor	W.B.	15 to 24degC (59 to 75degF)
	Outdoor	D.B.	- 5 to 43degC (23 to 109degF)
Heating capacity (Nominal)	*3	kW	56.0
	*3	kcal / h	48,200
	*3	Btu / h	191,100
	Power input	kW	13.05
	Current input	A	22.0-20.9-20.1
	COP (kW / kW)		4.29
Temp. range of heating	Indoor temp.	D.B.	15 to 27degC (59 to 81degF)
	Outdoor temp.	W.B.	-20 to 15.5degC (-4 to 60degF)
Indoor unit connectable	Total capacity		50 - 130% of outdoor unit capacity
	Model / Quantity		P15 - P250/1 - 39
Sound pressure level (measured in anechoic room)		dB <A>	62
Diameter of refrigerant pipe	Liquid	mm (in.)	15.88 (5/8) Brazed
	Gas	mm (in.)	28.58(1-1/8) Brazed

Set Model

Model			PUHY-EP200YHM-A(-BS)	PUHY-EP250YHM-A(-BS)
External finish			Pre-coated galvanized steel sheets (+powder coating for -BS type)	
			<MUNSELL 5Y 8/1 or similar>	
External dimension H x W x D		mm	1,710(without legs 1,650)x920x760	1,710(without legs 1,650)x1220x760
		in.	67-3/8(without legs 65)x36-1/4x29-15/16	67-3/8(without legs 65)x48-1/16x29-15/16
Net weight		kg (lb)	200 (441)	245 (541)
Heat exchanger			Salt-resistant cross fin & copper tube	Salt-resistant cross fin & copper tube
Compressor	Type		Inverter scroll hermetic compressor	Inverter scroll hermetic compressor
	Manufacture		MITSUBISHI ELECTRIC CORPORATION	
	Starting method		Inverter	Inverter
	Motor output	kW	5.4	6.7
	Case heater	kW	0.035	0.045
	Lubricant		MEL32	MEL32
FAN	Air flow rate	m^3 / min	185	225
		L / s	3,083	3,750
		cfm	6,532	7,945
	External static press.	*4	0 Pa (0mmH_2O)	0 Pa (0mmH_2O)
	Type x Quantity		Propeller fan x 1	Propeller fan x 1
	Control, Driving mechanism		Inverter-control, Direct-driven by motor	Inverter-control, Direct-driven by motor
	Motor output	kW	0.46 x 1	0.46 x 1
HIC circuit (HIC: Heat Inter-Changer)			Copper pipe,tube-in-tube structure	
Protection	High pressure protection		High pres. Sensor & High pres. Switch at 4.15 MPa (601psi)	
	Inverter circuit (COMP. / FAN)		Over-heat protection, Over-current protection	
	Compressor		Over-heat protection	
	Fan motor		Thermal switch	
Defrosting method			Auto-defrost mode (Reversed refrigerant circle)	
Refrigerant	Type x original charge		R410A x 9.0 kg (20lb)	R410A x 11.5 kg (26lb)
	Control		LEV and HIC circuit	
Pipe between unit distributor	Liquid	mm (in.)	9.52 (3/8) Brazed	9.52 (3/8) Brazed
	Gas	mm (in.)	19.05(3/4) Brazed	22.2(7/8) Brazed
Drawing	External		KB94T273	
	Wiring		KE94C140	KE94C319
Standard attachment	Document		Installation Manual	
	Accessory		Refrigerant conn. pipe	
Optional parts			Outdoor Twinning Kit : CMY-Y100VBK2 joint :CMY-Y102S/L-G2,CMY-Y202-G2 Header :CMY-Y104/108/1010-G	
Remarks			*Details on foundation work, duct work, insulation work, electrical wiring, power source switch, and other items shall be referred to the Installation Manual. *Due to continuing improvement, above specifications may be subject to change without notice.	

Notes :	*1 Nominal cooling conditions	*2 Nominal cooling conditions	*3 Nominal heating conditions	Unit converter
Indoor :	27degCDB/19degCWB (81degFDB/66degFWB)	27degCDB/19.5degCWB (81degFDB/67degFWB)	20degCDB(68degFDB)	kcal = kW x 860
Outdoor :	35degCDB(95degFDB)	35degCDB(95degFDB)	7degCDB/6degCWB (45degFDB/43degFWB)	Btu/h = kW x 3,412
Pipe length :	7.5m(24-9/16ft)	5m(16-3/8ft)	7.5m(24-9/16ft)	cfm = m^3/min x 35.31
Level difference :	0m(0ft)	0m(0ft)	0m(0ft)	lb = kg/0.4536
*Nominal condition *1,*3 are subject to JIS B8615-1				*Above specification data is subject to rounding variation.
*4 External static pressure option is available (30Pa, 60Pa/3.1mmH_2O, 6.1mmH_2O)				

Y(HIGH COP)

Model			PUHY-EP500YSHM-A(-BS)
Power source			3-phase 4-wire 380-400-415V 50/60Hz
Cooling capacity (Nominal)	*1	kW	56.0
	*1	kcal / h	48,200
	*1	Btu / h	191,100
	*2	kcal / h	50,000
	Power input	kW	13.46
	Current input	A	22.7-21.5-20.8
	COP (kW / kW)		4.16
Temp. range of cooling	Indoor	W.B.	15 to 24degC (59 to 75degF)
	Outdoor	D.B.	- 5 to 43degC (23 to 109degF)
Heating capacity (Nominal)	*3	kW	63.0
	*3	kcal / h	54,200
	*3	Btu / h	215,000
	Power input	kW	15.14
	Current input	A	25.5-24.2-23.4
	COP (kW / kW)		4.16
Temp. range of heating	Indoor temp.	D.B.	15 to 27degC (59 to 81degF)
	Outdoor temp.	W.B.	-20 to 15.5degC (-4 to 60degF)
Indoor unit connectable	Total capacity		50 - 130% of outdoor unit capacity
	Model / Quantity		P15 - P250/1 - 43
Sound pressure level (measured in anechoic room)		dB <A>	62
Diameter of refrigerant pipe	Liquid	mm (in.)	15.88 (5/8) Brazed
	Gas	mm (in.)	28.58(1-1/8) Brazed

Set Model

Model			PUHY-EP200YHM-A(-BS)	PUHY-EP300YHM-A(-BS)
External finish			Pre-coated galvanized steel sheets (+powder coating for -BS type)	
			<MUNSELL 5Y 8/1 or similar>	
External dimension H x W x D		mm	1,710(without legs 1,650)x920x760	1,710(without legs 1,650)x1220x760
		in.	67-3/8(without legs 65)x36-1/4x29-15/16	67-3/8(without legs 65)x48-1/16x29-15/16
Net weight		kg (lb)	200 (441)	245 (541)
Heat exchanger			Salt-resistant cross fin & copper tube	Salt-resistant cross fin & copper tube
Compressor	Type		Inverter scroll hermetic compressor	Inverter scroll hermetic compressor
	Manufacture		MITSUBISHI ELECTRIC CORPORATION	
	Starting method		Inverter	Inverter
	Motor output	kW	5.4	8.3
	Case heater	kW	0.035	0.045
	Lubricant		MEL32	MEL32
FAN	Air flow rate	m^3 / min	185	225
		L / s	3,083	3,750
		cfm	6,532	7,945
	External static press.	*4	0 Pa (0mmH_2O)	0 Pa (0mmH_2O)
	Type x Quantity		Propeller fan x 1	Propeller fan x 1
	Control, Driving mechanism		Inverter-control, Direct-driven by motor	Inverter-control, Direct-driven by motor
	Motor output	kW	0.46 x 1	0.46 x 1
HIC circuit (HIC: Heat Inter-Changer)			Copper pipe,tube-in-tube structure	
Protection	High pressure protection		High pres. Sensor & High pres. Switch at 4.15 MPa (601psi)	
	Inverter circuit (COMP. / FAN)		Over-heat protection, Over-current protection	
	Compressor		Over-heat protection	
	Fan motor		Thermal switch	
Defrosting method			Auto-defrost mode (Reversed refrigerant circle)	
Refrigerant	Type x original charge		R410A x 9.0 kg (20lb)	R410A x 11.5 kg (26lb)
	Control		LEV and HIC circuit	
Pipe between unit distributor	Liquid	mm (in.)	9.52 (3/8) Brazed	12.7 (1/2) Brazed
	Gas	mm (in.)	19.05(3/4) Brazed	22.2(7/8) Brazed
Drawing	External		KB94T273	
	Wiring		KE94C140	KE94C140
Standard attachment	Document		Installation Manual	
	Accessory		Refrigerant conn. pipe	
Optional parts			Outdoor Twinning Kit : CMY-Y100VBK2 joint :CMY-Y102S/L-G2,CMY-Y202-G2 Header :CMY-Y104/108/1010-G	
Remarks			*Details on foundation work, duct work, insulation work, electrical wiring, power source switch, and other items shall be referred to the Installation Manual. *Due to continuing improvement, above specifications may be subject to change without notice.	

Notes :	*1 Nominal cooling conditions	*2 Nominal cooling conditions	*3 Nominal heating conditions	Unit converter
Indoor :	27degCDB/19degCWB (81degFDB/66degFWB)	27degCDB/19.5degCWB (81degFDB/67degFWB)	20degCDB(68degFDB)	kcal = kW x 860
Outdoor :	35degCDB(95degFDB)	35degCDB(95degFDB)	7degCDB/6degCWB (45degFDB/43degFWB)	Btu/h = kW x 3,412
Pipe length :	7.5m(24-9/16ft)	5m(16-3/8ft)	7.5m(24-9/16ft)	cfm = m^3/min x 35.31
Level difference :	0m(0ft)	0m(0ft)	0m(0ft)	lb = kg/0.4536
*Nominal condition *1,*3 are subject to JIS B8615-1				*Above specification data is subject to rounding variation.
*4 External static pressure option is available (30Pa, 60Pa/3.1mmH_2O, 6.1mmH_2O)				

1. SPECIFICATIONS

Model			PUHY-EP550YSHM-A1(-BS)
Power source			3-phase 4-wire 380-400-415V 50/60Hz
Cooling capacity (Nominal)	*1	kW	63.0
	*1	kcal / h	54,200
	*1	Btu / h	215,000
	*2	kcal / h	55,000
	Power input	kW	15.44
	Current input	A	26.0-24.7-23.8
	COP (kW / kW)		4.08
Temp. range of cooling	Indoor	W.B.	15 to 24degC (59 to 75degF)
	Outdoor	D.B.	- 5 to 43degC (23 to 109degF)
Heating capacity (Nominal)	*3	kW	69.0
	*3	kcal / h	59,300
	*3	Btu / h	235,400
	Power input	kW	16.82
	Current input	A	28.3-26.9-26.0
	COP (kW / kW)		4.10
Temp. range of heating	Indoor temp.	D.B.	15 to 27degC (59 to 81degF)
	Outdoor temp.	W.B.	-20 to 15.5degC (-4 to 60degF)
Indoor unit connectable	Total capacity		50 - 130% of outdoor unit capacity
	Model / Quantity		P15 - P250/1 - 47
Sound pressure level (measured in anechoic room)		dB <A>	63
Diameter of refrigerant pipe	Liquid	mm (in.)	15.88 (5/8) Brazed
	Gas	mm (in.)	28.58(1-1/8) Brazed

Set Model

Model			PUHY-EP250YHM-A(-BS)	PUHY-EP300YHM-A(-BS)
External finish			Pre-coated galvanized steel sheets (+powder coating for -BS type)	
			<MUNSELL 5Y 8/1 or similar>	
External dimension H x W x D		mm	1,710(without legs 1,650)x1220x760	1,710(without legs 1,650)x1220x760
		in.	67-3/8(without legs 65)x48-1/16x29-15/16	67-3/8(without legs 65)x48-1/16x29-15/16
Net weight		kg (lb)	245 (541)	245 (541)
Heat exchanger			Salt-resistant cross fin & copper tube	Salt-resistant cross fin & copper tube
Compressor	Type		Inverter scroll hermetic compressor	Inverter scroll hermetic compressor
	Manufacture		MITSUBISHI ELECTRIC CORPORATION	
	Starting method		Inverter	Inverter
	Motor output	kW	6.7	8.3
	Case heater	kW	0.045	0.045
	Lubricant		MEL32	MEL32
FAN	Air flow rate	m^3 / min	225	225
		L / s	3,750	3,750
		cfm	7,945	7,945
	External static press.	*4	0 Pa (0mmH_2O)	0 Pa (0mmH_2O)
	Type x Quantity		Propeller fan x 1	Propeller fan x 1
	Control, Driving mechanism		Inverter-control, Direct-driven by motor	Inverter-control, Direct-driven by motor
	Motor output	kW	0.46 x 1	0.46 x 1
HIC circuit (HIC: Heat Inter-Changer)			Copper pipe,tube-in-tube structure	
Protection	High pressure protection		High pres. Sensor & High pres. Switch at 4.15 MPa (601psi)	
	Inverter circuit (COMP. / FAN)		Over-heat protection, Over-current protection	
	Compressor		Over-heat protection	
	Fan motor		Thermal switch	
Defrosting method			Auto-defrost mode (Reversed refrigerant circle)	
Refrigerant	Type x original charge		R410A x 11.5kg (26lb)	R410A x 11.5 kg (26lb)
	Control		LEV and HIC circuit	
Pipe between unit distributor	Liquid	mm (in.)	9.52 (3/8) Brazed	12.7 (1/2) Brazed
	Gas	mm (in.)	22.2(7/8) Brazed	22.2(7/8) Brazed
Drawing	External		KB94T274	
	Wiring		KE94C319	KE94C140
Standard attachment	Document		Installation Manual	
	Accessory		Refrigerant conn. pipe	
Optional parts			Outdoor Twinning Kit : CMY-Y100VBK2 joint :CMY-Y102S/L-G2,CMY-Y202/302-G2 Header :CMY-Y104/108/1010-G	
Remarks			*Details on foundation work, duct work, insulation work, electrical wiring, power source switch, and other items shall be referred to the Installation Manual. *Due to continuing improvement, above specifications may be subject to change without notice.	

Notes :	*1 Nominal cooling conditions	*2 Nominal cooling conditions	*3 Nominal heating conditions	Unit converter
Indoor :	27degCDB/19degCWB (81degFDB/66degFWB)	27degCDB/19.5degCWB (81degFDB/67degFWB)	20degCDB(68degFDB)	kcal = kW x 860
Outdoor :	35degCDB(95degFDB)	35degCDB(95degFDB)	7degCDB/6degCWB (45degFDB/43degFWB)	Btu/h = kW x 3,412
Pipe length :	7.5m(24-9/16ft)	5m(16-3/8ft)	7.5m(24-9/16ft)	cfm = m^3/min x 35.31
Level difference :	0m(0ft)	0m(0ft)	0m(0ft)	lb = kg/0.4536
*Nominal condition *1,*3 are subject to JIS B8615-1				*Above specification data is subject to rounding variation.
*4 External static pressure option is available (30Pa, 60Pa/3.1mmH_2O, 6.1mmH_2O)				

Y(HIGH COP)

Model			PUHY-EP600YSHM-A(-BS)
Power source			3-phase 4-wire 380-400-415V 50/60Hz
Cooling capacity (Nominal)	*1	kW	69.0
	*1	kcal / h	59,300
	*1	Btu / h	235,400
	*2	kcal / h	60,000
	Power input	kW	16.99
	Current input	A	28.6-27.2-26.2
	COP (kW / kW)		4.06
Temp. range of cooling	Indoor	W.B.	15 to 24degC (59 to 75degF)
	Outdoor	D.B.	- 5 to 43degC (23 to 109degF)
Heating capacity (Nominal)	*3	kW	76.5
	*3	kcal / h	65,800
	*3	Btu / h	261,000
	Power input	kW	18.93
	Current input	A	31.9-30.3-29.2
	COP (kW / kW)		4.04
Temp. range of heating	Indoor temp.	D.B.	15 to 27degC (59 to 81degF)
	Outdoor temp.	W.B.	-20 to 15.5degC (-4 to 60degF)
Indoor unit connectable	Total capacity		50 - 130% of outdoor unit capacity
	Model / Quantity		P15 - P250/1 - 50
Sound pressure level (measured in anechoic room)		dB <A>	63
Diameter of refrigerant pipe	Liquid	mm (in.)	15.88 (5/8) Brazed
	Gas	mm (in.)	28.58(1-1/8) Brazed

Set Model

Model			PUHY-EP300YHM-A(-BS)	PUHY-EP300YHM-A(-BS)
External finish			Pre-coated galvanized steel sheets (+powder coating for -BS type)	
			<MUNSELL 5Y 8/1 or similar>	
External dimension H x W x D		mm	1,710(without legs 1,650)x1220x760	1,710(without legs 1,650)x1220x760
		in.	67-3/8(without legs 65)x48-1/16x29-15/16	67-3/8(without legs 65)x48-1/16x29-15/16
Net weight		kg (lb)	245 (541)	245 (541)
Heat exchanger			Salt-resistant cross fin & copper tube	Salt-resistant cross fin & copper tube
Compressor	Type		Inverter scroll hermetic compressor	Inverter scroll hermetic compressor
	Manufacture		MITSUBISHI ELECTRIC CORPORATION	
	Starting method		Inverter	Inverter
	Motor output	kW	8.3	8.3
	Case heater	kW	0.045	0.045
	Lubricant		MEL32	MEL32
FAN	Air flow rate	m^3 / min	225	225
		L / s	3,750	3,750
		cfm	7,945	7,945
	External static press.	*4	0 Pa (0mmH_2O)	0 Pa (0mmH_2O)
	Type x Quantity		Propeller fan x 1	Propeller fan x 1
	Control, Driving mechanism		Inverter-control, Direct-driven by motor	Inverter-control, Direct-driven by motor
	Motor output	kW	0.46 x 1	0.46 x 1
HIC circuit (HIC: Heat Inter-Changer)			Copper pipe,tube-in-tube structure	
Protection	High pressure protection		High pres. Sensor & High pres. Switch at 4.15 MPa (601psi)	
	Inverter circuit (COMP. / FAN)		Over-heat protection, Over-current protection	
	Compressor		Over-heat protection	
	Fan motor		Thermal switch	
Defrosting method			Auto-defrost mode (Reversed refrigerant circle)	
Refrigerant	Type x original charge		R410A x 11.5 kg (26lb)	R410A x 11.5 kg (26lb)
	Control		LEV and HIC circuit	
Pipe between unit distributor	Liquid	mm (in.)	12.7 (1/2) Brazed	12.7 (1/2) Brazed
	Gas	mm (in.)	22.2(7/8) Brazed	22.2(7/8) Brazed
Drawing	External		KB94T274	
	Wiring		KE94C140	KE94C140
Standard attachment	Document		Installation Manual	
	Accessory		Refrigerant conn. pipe	
Optional parts			Outdoor Twinning Kit : CMY-Y100VBK2 joint :CMY-Y102S/L-G2,CMY-Y202/302-G2 Header :CMY-Y104/108/1010-G	
Remarks			*Details on foundation work, duct work, insulation work, electrical wiring, power source switch, and other items shall be referred to the Installation Manual. *Due to continuing improvement, above specifications may be subject to change without notice.	

Notes :	*1 Nominal cooling conditions	*2 Nominal cooling conditions	*3 Nominal heating conditions	Unit converter
Indoor :	27degCDB/19degCWB (81degFDB/66degFWB)	27degCDB/19.5degCWB (81degFDB/67degFWB)	20degCDB(68degFDB)	kcal = kW x 860
Outdoor :	35degCDB(95degFDB)	35degCDB(95degFDB)	7degCDB/6degCWB (45degFDB/43degFWB)	Btu/h = kW x 3,412
Pipe length :	7.5m(24-9/16ft)	5m(16-3/8ft)	7.5m(24-9/16ft)	cfm = m^3/min x 35.31
Level difference :	0m(0ft)	0m(0ft)	0m(0ft)	lb = kg/0.4536

*Nominal condition *1,*3 are subject to JIS B8615-1

*4 External static pressure option is available (30Pa, 60Pa/3.1mmH_2O, 6.1mmH_2O)

*Above specification data is subject to rounding variation.

Model			PUHY-EP650YSHM-A(-BS)
Power source			3-phase 4-wire 380-400-415V 50/60Hz
Cooling capacity (Nominal)	*1	kW	73.0
	*1	kcal / h	62,800
	*1	Btu / h	249,100
	*2	kcal / h	65,000
	Power input	kW	18.34
	Current input	A	30.9-29.4-28.3
	COP (kW / kW)		3.98
Temp. range of cooling	Indoor	W.B.	15 to 24degC (59 to 75degF)
	Outdoor	D.B.	- 5 to 43degC (23 to 109degF)
Heating capacity (Nominal)	*3	kW	81.5
	*3	kcal / h	70,100
	*3	Btu / h	278,100
	Power input	kW	19.13
	Current input	A	32.2-30.6-29.5
	COP (kW / kW)		4.26
Temp. range of heating	Indoor temp.	D.B.	15 to 27degC (59 to 81degF)
	Outdoor temp.	W.B.	-20 to 15.5degC (-4 to 60degF)
Indoor unit connectable	Total capacity		50 - 130% of outdoor unit capacity
	Model / Quantity		P15 - P250/1 - 50
Sound pressure level (measured in anechoic room)		dB <A>	63.5
Diameter of refrigerant pipe	Liquid	mm (in.)	15.88 (5/8) Brazed
	Gas	mm (in.)	28.58(1-1/8) Brazed

Set Model

Model			PUHY-EP300YHM-A(-BS)	PUHY-P350YHM-A(-BS)
External finish			Pre-coated galvanized steel sheets (+powder coating for -BS type)	
			<MUNSELL 5Y 8/1 or similar>	
External dimension H x W x D		mm	1,710(without legs 1,650)x1220x760	1,710(without legs 1,650)x1220x760
		in.	67-3/8(without legs 65)x48-1/16x29-15/16	67-3/8(without legs 65)x48-1/16x29-15/16
Net weight		kg (lb)	245 (541)	245 (541)
Heat exchanger			Salt-resistant cross fin & copper tube	Salt-resistant cross fin & copper tube
Compressor	Type		Inverter scroll hermetic compressor	Inverter scroll hermetic compressor
	Manufacture		MITSUBISHI ELECTRIC CORPORATION	
	Starting method		Inverter	Inverter
	Motor output	kW	8.3	10.3
	Case heater	kW	0.045	0.045
	Lubricant		MEL32	MEL32
FAN	Air flow rate	m^3 / min	225	225
		L / s	3,750	3,750
		cfm	7,945	7,945
	External static press.	*4	0 Pa (0mmH_2O)	0 Pa (0mmH_2O)
	Type x Quantity		Propeller fan x 1	Propeller fan x 1
	Control, Driving mechanism		Inverter-control, Direct-driven by motor	Inverter-control, Direct-driven by motor
	Motor output	kW	0.46 x 1	0.46 x 1
HIC circuit (HIC: Heat Inter-Changer)			Copper pipe,tube-in-tube structure	
Protection	High pressure protection		High pres. Sensor & High pres. Switch at 4.15 MPa (601psi)	
	Inverter circuit (COMP. / FAN)		Over-heat protection, Over-current protection	
	Compressor		Over-heat protection	
	Fan motor		Thermal switch	
Defrosting method			Auto-defrost mode (Reversed refrigerant circle)	
Refrigerant	Type x original charge		R410A x 11.5 kg (26lb)	R410A x 11.5 kg (26lb)
	Control		LEV and HIC circuit	
Pipe between unit distributor	Liquid	mm (in.)	12.7 (1/2) Brazed	12.7 (1/2) Brazed
	Gas	mm (in.)	22.2(7/8) Brazed	28.58(1-1/8) Brazed
Drawing	External		KB94T274	
	Wiring		KE94C140	KE94C140
Standard attachment	Document		Installation Manual	
	Accessory		Refrigerant conn. pipe	
Optional parts			Outdoor Twinning Kit : CMY-Y100VBK2 joint :CMY-Y102S/L-G2,CMY-Y202/302-G2 Header :CMY-Y104/108/1010-G	
Remarks			*Details on foundation work, duct work, insulation work, electrical wiring, power source switch, and other items shall be referred to the Installation Manual. *Due to continuing improvement, above specifications may be subject to change without notice.	

Notes :	*1 Nominal cooling conditions	*2 Nominal cooling conditions	*3 Nominal heating conditions	Unit converter
Indoor :	27degCDB/19degCWB (81degFDB/66degFWB)	27degCDB/19.5degCWB (81degFDB/67degFWB)	20degCDB(68degFDB)	kcal = kW x 860
Outdoor :	35degCDB(95degFDB)	35degCDB(95degFDB)	7degCDB/6degCWB (45degFDB/43degFWB)	Btu/h = kW x 3,412
Pipe length :	7.5m(24-9/16ft)	5m(16-3/8ft)	7.5m(24-9/16ft)	cfm = m^3/min x 35.31
Level difference :	0m(0ft)	0m(0ft)	0m(0ft)	lb = kg/0.4536
*Nominal condition *1,*3 are subject to JIS B8615-1				*Above specification data is subject to rounding variation.
*4 External static pressure option is available (30Pa, 60Pa/3.1mmH_2O, 6.1mmH_2O)				

Model			PUHY-EP700YSHM-A(-BS)
Power source			3-phase 4-wire 380-400-415V 50/60Hz
Cooling capacity (Nominal)	*1	kW	80.0
	*1	kcal / h	68,800
	*1	Btu / h	273,000
	*2	kcal / h	70,000
	Power input	kW	20.99
	Current input	A	35.4-33.6-32.4
	COP (kW / kW)		3.81
Temp. range of cooling	Indoor	W.B.	15 to 24degC (59 to 75degF)
	Outdoor	D.B.	- 5 to 43degC (23 to 109degF)
Heating capacity (Nominal)	*3	kW	88.0
	*3	kcal / h	75,700
	*3	Btu / h	300,300
	Power input	kW	20.00
	Current input	A	33.7-32.0-30.9
	COP (kW / kW)		4.40
Temp. range of heating	Indoor temp.	D.B.	15 to 27degC (59 to 81degF)
	Outdoor temp.	W.B.	-20 to 15.5degC (-4 to 60degF)
Indoor unit connectable	Total capacity		50 - 130% of outdoor unit capacity
	Model / Quantity		P15 - P250/1 - 50
Sound pressure level (measured in anechoic room)		dB <A>	63
Diameter of refrigerant pipe	Liquid	mm (in.)	19.05 (3/4) Brazed
	Gas	mm (in.)	34.93(1-3/8) Brazed

Set Model

Model			PUHY-EP200YHM-A(-BS)	PUHY-EP200YHM-A(-BS)	PUHY-EP300YHM-A(-BS)
External finish			Pre-coated galvanized steel sheets (+powder coating for -BS type) <MUNSELL 5Y 8/1 or similar>		
External dimension H x W x D		mm	1,710(without legs 1,650)x920x760	1,710(without legs 1,650)x920x760	1,710(without legs 1,650)x1220x760
		in.	67-3/8(without legs 65)x36-1/4x29-15/16	67-3/8(without legs 65)x36-1/4x29-15/16	67-3/8(without legs 65)x48-1/16x29-15/16
Net weight		kg (lb)	200 (441)	200 (441)	245 (541)
Heat exchanger			Salt-resistant cross fin & copper tube	Salt-resistant cross fin & copper tube	Salt-resistant cross fin & copper tube
Compressor	Type		Inverter scroll hermetic compressor	Inverter scroll hermetic compressor	Inverter scroll hermetic compressor
	Manufacture		MITSUBISHI ELECTRIC CORPORATION		
	Starting method		Inverter	Inverter	Inverter
	Motor output	kW	5.4	5.4	8.3
	Case heater	kW	0.035	0.035	0.045
	Lubricant		MEL32	MEL32	MEL32
FAN	Air flow rate	m^3 / min	185	185	225
		L / s	3,083	3,083	3,750
		cfm	6,532	6,532	7,945
	External static press.	*4	0 Pa (0mmH_2O)	0 Pa (0mmH_2O)	0 Pa (0mmH_2O)
	Type x Quantity		Propeller fan x 1	Propeller fan x 1	Propeller fan x 1
	Control, Driving mechanism		Inverter-control, Direct-driven by motor	Inverter-control, Direct-driven by motor	Inverter-control, Direct-driven by motor
	Motor output	kW	0.46 x 1	0.46 x 1	0.46 x 1
HIC circuit (HIC: Heat Inter-Changer)			Copper pipe,tube-in-tube structure		
Protection	High pressure protection		High pres. Sensor & High pres. Switch at 4.15 MPa (601psi)		
	Inverter circuit (COMP. / FAN)		Over-heat protection, Over-current protection		
	Compressor		Over-heat protection		
	Fan motor		Thermal switch		
Defrosting method			Auto-defrost mode (Reversed refrigerant circle)		
Refrigerant	Type x original charge		R410A x 9.0 kg (20lb)	R410A x 9.0 kg (20lb)	R410A x 11.5 kg (26lb)
	Control		LEV and HIC circuit		
Pipe between unit distributor	Liquid	mm (in.)	9.52 (3/8) Brazed	9.52 (3/8) Brazed	12.7 (1/2) Brazed
	Gas	mm (in.)	19.05(3/4) Brazed	19.05(3/4) Brazed	22.2(7/8) Brazed
Drawing	External		KB94T299		
	Wiring		KE94C140	KE94C140	KE94C140
Standard attachment	Document		Installation Manual		
	Accessory		Refrigerant conn. pipe		
Optional parts			Outdoor Twinning Kit : CMY-Y300VBK2 joint :CMY-Y102S/L-G2,CMY-Y202/302-G2 Header :CMY-Y104/108/1010-G		
Remarks			*Details on foundation work, duct work, insulation work, electrical wiring, power source switch, and other items shall be referred to the Installation Manual. *Due to continuing improvement, above specifications may be subject to change without notice.		

Notes :	*1 Nominal cooling conditions	*2 Nominal cooling conditions	*3 Nominal heating conditions	Unit converter
Indoor :	27degCDB/19degCWB (81degFDB/66degFWB)	27degCDB/19.5degCWB (81degFDB/67degFWB)	20degCDB(68degFDB)	kcal = kW x 860
Outdoor :	35degCDB(95degFDB)	35degCDB(95degFDB)	7degCDB/6degCWB (45degFDB/43degFWB)	Btu/h = kW x 3,412
Pipe length :	7.5m(24-9/16ft)	5m(16-3/8ft)	7.5m(24-9/16ft)	cfm = m^3/min x 35.31
Level difference :	0m(0ft)	0m(0ft)	0m(0ft)	lb = kg/0.4536
*Nominal condition *1,*3 are subject to JIS B8615-1				*Above specification data is subject to rounding variation.
*4 External static pressure option is available (30Pa, 60Pa/3.1mmH_2O, 6.1mmH_2O)				

Model			PUHY-EP750YSHM-A1(-BS)
Power source			3-phase 4-wire 380-400-415V 50/60Hz
Cooling capacity (Nominal)	*1	kW	85.0
	*1	kcal / h	73,100
	*1	Btu / h	290,000
	*2	kcal / h	75,000
	Power input	kW	20.43
	Current input	A	34.4-32.7-31.5
	COP (kW / kW)		4.16
Temp. range of cooling	Indoor	W.B.	15 to 24degC (59 to 75degF)
	Outdoor	D.B.	- 5 to 43degC (23 to 109degF)
Heating capacity (Nominal)	*3	kW	95.0
	*3	kcal / h	81,700
	*3	Btu / h	324,100
	Power input	kW	22.19
	Current input	A	37.4-35.5-34.3
	COP (kW / kW)		4.28
Temp. range of heating	Indoor temp.	D.B.	15 to 27degC (59 to 81degF)
	Outdoor temp.	W.B.	-20 to 15.5degC (-4 to 60degF)
Indoor unit connectable	Total capacity		50 - 130% of outdoor unit capacity
	Model / Quantity		P15 - P250/1 - 50
Sound pressure level (measured in anechoic room)		dB <A>	64
Diameter of refrigerant pipe	Liquid	mm (in.)	19.05 (3/4) Brazed
	Gas	mm (in.)	34.93(1-3/8) Brazed

Set Model

Model			PUHY-EP200YHM-A(-BS)	PUHY-EP250YHM-A(-BS)	PUHY-EP300YHM-A(-BS)
External finish			Pre-coated galvanized steel sheets (+powder coating for -BS type) <MUNSELL 5Y 8/1 or similar>		
External dimension H x W x D		mm	1,710(without legs 1,650)x920x760	1,710(without legs 1,650)x1220x760	1,710(without legs 1,650)x1220x760
		in.	67-3/8(without legs 65)x36-1/4x29-15/16	67-3/8(without legs 65)x48-1/16x29-15/16	67-3/8(without legs 65)x48-1/16x29-15/16
Net weight		kg (lb)	200 (441)	245 (541)	245 (541)
Heat exchanger			Salt-resistant cross fin & copper tube	Salt-resistant cross fin & copper tube	Salt-resistant cross fin & copper tube
Compressor	Type		Inverter scroll hermetic compressor	Inverter scroll hermetic compressor	Inverter scroll hermetic compressor
	Manufacture		MITSUBISHI ELECTRIC CORPORATION		
	Starting method		Inverter	Inverter	Inverter
	Motor output	kW	5.4	6.7	8.3
	Case heater	kW	0.035	0.045	0.045
	Lubricant		MEL32	MEL32	MEL32
FAN	Air flow rate	m^3 / min	185	225	225
		L / s	3,083	3,750	3,750
		cfm	6,532	7,945	7,945
	External static press.	*4	0 Pa (0mmH_2O)	0 Pa (0mmH_2O)	0 Pa (0mmH_2O)
	Type x Quantity		Propeller fan x 1	Propeller fan x 1	Propeller fan x 1
	Control, Driving mechanism		Inverter-control, Direct-driven by motor	Inverter-control, Direct-driven by motor	Inverter-control, Direct-driven by motor
	Motor output	kW	0.46 x 1	0.46 x 1	0.46 x 1
HIC circuit (HIC: Heat Inter-Changer)			Copper pipe,tube-in-tube structure		
Protection	High pressure protection		High pres. Sensor & High pres. Switch at 4.15 MPa (601psi)		
	Inverter circuit (COMP. / FAN)		Over-heat protection, Over-current protection		
	Compressor		Over-heat protection		
	Fan motor		Thermal switch		
Defrosting method			Auto-defrost mode (Reversed refrigerant circle)		
Refrigerant	Type x original charge		R410A x 9.0 kg (20lb)	R410A x 11.5 kg (26lb)	R410A x 11.5 kg (26lb)
	Control		LEV and HIC circuit		
Pipe between unit distributor	Liquid	mm (in.)	9.52 (3/8) Brazed	9.52 (3/8) Brazed	12.7 (1/2) Brazed
	Gas	mm (in.)	19.05(3/4) Brazed	22.2(7/8) Brazed	22.2(7/8) Brazed
Drawing	External		KB94T275		
	Wiring		KE94C140	KE94C319	KE94C140
Standard attachment	Document		Installation Manual		
	Accessory		Refrigerant conn. pipe		
Optional parts			Outdoor Twinning Kit : CMY-Y300VBK2 joint :CMY-Y102S/L-G2,CMY-Y202/302-G2 Header :CMY-Y104/108/1010-G		
Remarks			*Details on foundation work, duct work, insulation work, electrical wiring, power source switch, and other items shall be referred to the Installation Manual. *Due to continuing improvement, above specifications may be subject to change without notice.		

Notes :	*1 Nominal cooling conditions	*2 Nominal cooling conditions	*3 Nominal heating conditions	Unit converter
Indoor :	27degCDB/19degCWB (81degFDB/66degFWB)	27degCDB/19.5degCWB (81degFDB/67degFWB)	20degCDB(68degFDB)	kcal = kW x 860
Outdoor :	35degCDB(95degFDB)	35degCDB(95degFDB)	7degCDB/6degCWB (45degFDB/43degFWB)	Btu/h = kW x 3,412
Pipe length :	7.5m(24-9/16ft)	5m(16-3/8ft)	7.5m(24-9/16ft)	cfm = m^3/min x 35.31
Level difference :	0m(0ft)	0m(0ft)	0m(0ft)	lb = kg/0.4536
*Nominal condition *1,*3 are subject to JIS B8615-1				*Above specification data is subject to rounding variation.
*4 External static pressure option is available (30Pa, 60Pa/3.1mmH_2O, 6.1mmH_2O)				

Y(HIGH COP)

Model			PUHY-EP800YSHM-A(-BS)
Power source			3-phase 4-wire 380-400-415V 50/60Hz
Cooling capacity (Nominal)	*1	kW	90.0
	*1	kcal / h	77,400
	*1	Btu / h	307,100
	*2	kcal / h	80,000
	Power input	kW	22.00
	Current input	A	37.1-35.2-34.0
	COP (kW / kW)		4.09
Temp. range of cooling	Indoor	W.B.	15 to 24degC (59 to 75degF)
	Outdoor	D.B.	- 5 to 43degC (23 to 109degF)
Heating capacity (Nominal)	*3	kW	100.0
	*3	kcal / h	86,000
	*3	Btu / h	341,200
	Power input	kW	23.41
	Current input	A	39.5-37.5-36.1
	COP (kW / kW)		4.27
Temp. range of heating	Indoor temp.	D.B.	15 to 27degC (59 to 81degF)
	Outdoor temp.	W.B.	-20 to 15.5degC (-4 to 60degF)
Indoor unit connectable	Total capacity		50 - 130% of outdoor unit capacity
	Model / Quantity		P15 - P250/1 - 50
Sound pressure level (measured in anechoic room)		dB <A>	64
Diameter of refrigerant pipe	Liquid	mm (in.)	19.05 (3/4) Brazed
	Gas	mm (in.)	34.93(1-3/8) Brazed

Set Model

Model			PUHY-EP200YHM-A(-BS)	PUHY-EP300YHM-A(-BS)	PUHY-EP300YHM-A(-BS)
External finish			Pre-coated galvanized steel sheets (+powder coating for -BS type) <MUNSELL 5Y 8/1 or similar>		
External dimension H x W x D		mm	1,710(without legs 1,650)x920x760	1,710(without legs 1,650)x1220x760	1,710(without legs 1,650)x1220x760
		in.	67-3/8(without legs 65)x36-1/4x29-15/16	67-3/8(without legs 65)x48-1/16x29-15/16	67-3/8(without legs 65)x48-1/16x29-15/16
Net weight		kg (lb)	200 (441)	245 (541)	245 (541)
Heat exchanger			Salt-resistant cross fin & copper tube	Salt-resistant cross fin & copper tube	Salt-resistant cross fin & copper tube
Compressor	Type		Inverter scroll hermetic compressor	Inverter scroll hermetic compressor	Inverter scroll hermetic compressor
	Manufacture		MITSUBISHI ELECTRIC CORPORATION		
	Starting method		Inverter	Inverter	Inverter
	Motor output	kW	5.4	8.3	8.3
	Case heater	kW	0.035	0.045	0.045
	Lubricant		MEL32	MEL32	MEL32
FAN	Air flow rate	m^3 / min	185	225	225
		L / s	3,083	3,750	3,750
		cfm	6,532	7,945	7,945
	External static press.	*4	0 Pa (0mmH_2O)	0 Pa (0mmH_2O)	0 Pa (0mmH_2O)
	Type x Quantity		Propeller fan x 1	Propeller fan x 1	Propeller fan x 1
	Control, Driving mechanism		Inverter-control, Direct-driven by motor	Inverter-control, Direct-driven by motor	Inverter-control, Direct-driven by motor
	Motor output	kW	0.46 x 1	0.46 x 1	0.46 x 1
HIC circuit (HIC: Heat Inter-Changer)			Copper pipe,tube-in-tube structure		
Protection	High pressure protection		High pres. Sensor & High pres. Switch at 4.15 MPa (601psi)		
	Inverter circuit (COMP. / FAN)		Over-heat protection, Over-current protection		
	Compressor		Over-heat protection		
	Fan motor		Thermal switch		
Defrosting method			Auto-defrost mode (Reversed refrigerant circle)		
Refrigerant	Type x original charge		R410A x 9.0 kg (20lb)	R410A x 11.5 kg (26lb)	R410A x 11.5 kg (26lb)
	Control		LEV and HIC circuit		
Pipe between unit distributor	Liquid	mm (in.)	9.52 (3/8) Brazed	12.7 (1/2) Brazed	12.7 (1/2) Brazed
	Gas	mm (in.)	19.05(3/4) Brazed	22.2(7/8) Brazed	22.2(7/8) Brazed
Drawing	External		KB94T275		
	Wiring		KE94C140	KE94C140	KE94C140
Standard attachment	Document		Installation Manual		
	Accessory		Refrigerant conn. pipe		
Optional parts			Outdoor Twinning Kit : CMY-Y300VBK2 joint :CMY-Y102S/L-G2,CMY-Y202/302-G2 Header :CMY-Y104/108/1010-G		
Remarks			*Details on foundation work, duct work, insulation work, electrical wiring, power source switch, and other items shall be referred to the Installation Manual. *Due to continuing improvement, above specifications may be subject to change without notice.		

Notes :	*1 Nominal cooling conditions	*2 Nominal cooling conditions	*3 Nominal heating conditions	Unit converter
Indoor :	27degCDB/19degCWB (81degFDB/66degFWB)	27degCDB/19.5degCWB (81degFDB/67degFWB)	20degCDB(68degFDB)	kcal = kW x 860
Outdoor :	35degCDB(95degFDB)	35degCDB(95degFDB)	7degCDB/6degCWB (45degFDB/43degFWB)	Btu/h = kW x 3,412
Pipe length :	7.5m(24-9/16ft)	5m(16-3/8ft)	7.5m(24-9/16ft)	cfm = m^3/min x 35.31
Level difference :	0m(0ft)	0m(0ft)	0m(0ft)	lb = kg/0.4536
*Nominal condition *1,*3 are subject to JIS B8615-1				*Above specification data is subject to rounding variation.
*4 External static pressure option is available (30Pa, 60Pa/3.1mmH_2O, 6.1mmH_2O)				

Model			PUHY-EP850YSHM-A1(-BS)
Power source			3-phase 4-wire 380-400-415V 50/60Hz
Cooling capacity (Nominal)	*1	kW	96.0
	*1	kcal / h	82,600
	*1	Btu / h	327,600
	*2	kcal / h	85,000
	Power input	kW	23.58
	Current input	A	39.8-37.8-36.4
	COP (kW / kW)		4.07
Temp. range of cooling	Indoor	W.B.	15 to 24degC (59 to 75degF)
	Outdoor	D.B.	- 5 to 43degC (23 to 109degF)
Heating capacity (Nominal)	*3	kW	108.0
	*3	kcal / h	92,900
	*3	Btu / h	368,500
	Power input	kW	25.59
	Current input	A	43.1-41.0-39.5
	COP (kW / kW)		4.22
Temp. range of heating	Indoor temp.	D.B.	15 to 27degC (59 to 81degF)
	Outdoor temp.	W.B.	-20 to 15.5degC (-4 to 60degF)
Indoor unit connectable	Total capacity		50 - 130% of outdoor unit capacity
	Model / Quantity		P15 - P250/1 - 50
Sound pressure level (measured in anechoic room)		dB <A>	65
Diameter of refrigerant pipe	Liquid	mm (in.)	19.05 (3/4) Brazed
	Gas	mm (in.)	41.28(1-1/2) Brazed

Set Model

Model			PUHY-EP250YHM-A(-BS)	PUHY-EP300YHM-A(-BS)	PUHY-EP300YHM-A(-BS)
External finish			Pre-coated galvanized steel sheets (+powder coating for -BS type) <MUNSELL 5Y 8/1 or similar>		
External dimension H x W x D		mm	1,710(without legs 1,650)x1220x760	1,710(without legs 1,650)x1220x760	1,710(without legs 1,650)x1220x760
		in.	67-3/8(without legs 65)x48-1/16x29-15/16	67-3/8(without legs 65)x48-1/16x29-15/16	67-3/8(without legs 65)x48-1/16x29-15/16
Net weight		kg (lb)	245 (541)	245 (541)	245 (541)
Heat exchanger			Salt-resistant cross fin & copper tube	Salt-resistant cross fin & copper tube	Salt-resistant cross fin & copper tube
Compressor	Type		Inverter scroll hermetic compressor	Inverter scroll hermetic compressor	Inverter scroll hermetic compressor
	Manufacture		MITSUBISHI ELECTRIC CORPORATION		
	Starting method		Inverter	Inverter	Inverter
	Motor output	kW	6.7	8.3	8.3
	Case heater	kW	0.045	0.045	0.045
	Lubricant		MEL32	MEL32	MEL32
FAN	Air flow rate	m^3 / min	225	225	225
		L / s	3,750	3,750	3,750
		cfm	7,945	7,945	7,945
	External static press.	*4	0 Pa (0mmH_2O)	0 Pa (0mmH_2O)	0 Pa (0mmH_2O)
	Type x Quantity		Propeller fan x 1	Propeller fan x 1	Propeller fan x 1
	Control, Driving mechanism		Inverter-control, Direct-driven by motor	Inverter-control, Direct-driven by motor	Inverter-control, Direct-driven by motor
	Motor output	kW	0.46 x 1	0.46 x 1	0.46 x 1
HIC circuit (HIC: Heat Inter-Changer)			Copper pipe,tube-in-tube structure		
Protection	High pressure protection		High pres. Sensor & High pres. Switch at 4.15 MPa (601psi)		
	Inverter circuit (COMP. / FAN)		Over-heat protection, Over-current protection		
	Compressor		Over-heat protection		
	Fan motor		Thermal switch		
Defrosting method			Auto-defrost mode (Reversed refrigerant circle)		
Refrigerant	Type x original charge		R410A x 11.5 kg (26lb)	R410A x 11.5 kg (26lb)	R410A x 11.5 kg (26lb)
	Control		LEV and HIC circuit		
Pipe between unit distributor	Liquid	mm (in.)	9.52 (3/8) Brazed	12.7 (1/2) Brazed	12.7 (1/2) Brazed
	Gas	mm (in.)	22.2(7/8) Brazed	22.2(7/8) Brazed	22.2(7/8) Brazed
Drawing	External		KB94T276		
	Wiring		KE94C319	KE94C140	KE94C140
Standard attachment	Document		Installation Manual		
	Accessory		Refrigerant conn. pipe		
Optional parts			Outdoor Twinning Kit : CMY-Y300VBK2 joint :CMY-Y102S/L-G2,CMY-Y202/302-G2 Header :CMY-Y104/108/1010-G		
Remarks			*Details on foundation work, duct work, insulation work, electrical wiring, power source switch, and other items shall be referred to the Installation Manual. *Due to continuing improvement, above specifications may be subject to change without notice.		

Notes :	*1 Nominal cooling conditions	*2 Nominal cooling conditions	*3 Nominal heating conditions	Unit converter
Indoor :	27degCDB/19degCWB (81degFDB/66degFWB)	27degCDB/19.5degCWB (81degFDB/67degFWB)	20degCDB(68degFDB)	kcal = kW x 860
Outdoor :	35degCDB(95degFDB)	35degCDB(95degFDB)	7degCDB/6degCWB (45degFDB/43degFWB)	Btu/h = kW x 3,412
Pipe length :	7.5m(24-9/16ft)	5m(16-3/8ft)	7.5m(24-9/16ft)	cfm = m^3/min x 35.31
Level difference :	0m(0ft)	0m(0ft)	0m(0ft)	lb = kg/0.4536
*Nominal condition *1,*3 are subject to JIS B8615-1				*Above specification data is subject to rounding variation.
*4 External static pressure option is available (30Pa, 60Pa/3.1mmH_2O, 6.1mmH_2O)				

Y(HIGH COP)

Model			PUHY-EP900YSHM-A(-BS)
Power source			3-phase 4-wire 380-400-415V 50/60Hz
Cooling capacity (Nominal)	*1	kW	101.0
	*1	kcal / h	86,900
	*1	Btu / h	344,600
	*2	kcal / h	90,000
	Power input	kW	24.87
	Current input	A	41.9-39.8-38.4
	COP (kW / kW)		4.06
Temp. range of cooling	Indoor	W.B.	15 to 24degC (59 to 75degF)
	Outdoor	D.B.	- 5 to 43degC (23 to 109degF)
Heating capacity (Nominal)	*3	kW	113.0
	*3	kcal / h	97,200
	*3	Btu / h	385,600
	Power input	kW	27.90
	Current input	A	47.0-44.7-43.1
	COP (kW / kW)		4.05
Temp. range of heating	Indoor temp.	D.B.	15 to 27degC (59 to 81degF)
	Outdoor temp.	W.B.	-20 to 15.5degC (-4 to 60degF)
Indoor unit connectable	Total capacity		50 - 130% of outdoor unit capacity
	Model / Quantity		P15 - P250/1 - 50
Sound pressure level (measured in anechoic room)		dB <A>	65
Diameter of refrigerant pipe	Liquid	mm (in.)	19.05 (3/4) Brazed
	Gas	mm (in.)	41.28(1-1/2) Brazed

Set Model

Model			PUHY-EP300YHM-A(-BS)	PUHY-EP300YHM-A(-BS)	PUHY-EP300YHM-A(-BS)
External finish			Pre-coated galvanized steel sheets (+powder coating for -BS type) <MUNSELL 5Y 8/1 or similar>		
External dimension H x W x D		mm	1,710(without legs 1,650)x1220x760	1,710(without legs 1,650)x1220x760	1,710(without legs 1,650)x1220x760
		in.	67-3/8(without legs 65)x48-1/16x29-15/16	67-3/8(without legs 65)x48-1/16x29-15/16	67-3/8(without legs 65)x48-1/16x29-15/16
Net weight		kg (lb)	245 (541)	245 (541)	245 (541)
Heat exchanger			Salt-resistant cross fin & copper tube	Salt-resistant cross fin & copper tube	Salt-resistant cross fin & copper tube
Compressor	Type		Inverter scroll hermetic compressor	Inverter scroll hermetic compressor	Inverter scroll hermetic compressor
	Manufacture		MITSUBISHI ELECTRIC CORPORATION		
	Starting method		Inverter	Inverter	Inverter
	Motor output	kW	8.3	8.3	8.3
	Case heater	kW	0.045	0.045	0.045
	Lubricant		MEL32	MEL32	MEL32
FAN	Air flow rate	m^3 / min	225	225	225
		L / s	3,750	3,750	3,750
		cfm	7,945	7,945	7,945
	External static press.	*4	0 Pa (0mmH_2O)	0 Pa (0mmH_2O)	0 Pa (0mmH_2O)
	Type x Quantity		Propeller fan x 1	Propeller fan x 1	Propeller fan x 1
	Control, Driving mechanism		Inverter-control, Direct-driven by motor	Inverter-control, Direct-driven by motor	Inverter-control, Direct-driven by motor
	Motor output	kW	0.46 x 1	0.46 x 1	0.46 x 1
HIC circuit (HIC: Heat Inter-Changer)			Copper pipe,tube-in-tube structure		
Protection	High pressure protection		High pres. Sensor & High pres. Switch at 4.15 MPa (601psi)		
	Inverter circuit (COMP. / FAN)		Over-heat protection, Over-current protection		
	Compressor		Over-heat protection		
	Fan motor		Thermal switch		
Defrosting method			Auto-defrost mode (Reversed refrigerant circle)		
Refrigerant	Type x original charge		R410A x 11.5 kg (26lb)	R410A x 11.5 kg (26lb)	R410A x 11.5 kg (26lb)
	Control		LEV and HIC circuit		
Pipe between unit distributor	Liquid	mm (in.)	12.7 (1/2) Brazed	12.7 (1/2) Brazed	12.7 (1/2) Brazed
	Gas	mm (in.)	22.2(7/8) Brazed	22.2(7/8) Brazed	22.2(7/8) Brazed
Drawing	External		KB94T276		
	Wiring		KE94C140	KE94C140	KE94C140
Standard attachment	Document		Installation Manual		
	Accessory		Refrigerant conn. pipe		
Optional parts			Outdoor Twinning Kit : CMY-Y300VBK2 joint :CMY-Y102S/L-G2,CMY-Y202/302-G2 Header :CMY-Y104/108/1010-G		
Remarks			*Details on foundation work, duct work, insulation work, electrical wiring, power source switch, and other items shall be referred to the Installation Manual. *Due to continuing improvement, above specifications may be subject to change without notice.		

Notes :	*1 Nominal cooling conditions	*2 Nominal cooling conditions	*3 Nominal heating conditions	Unit converter
Indoor :	27degCDB/19degCWB (81degFDB/66degFWB)	27degCDB/19.5degCWB (81degFDB/67degFWB)	20degCDB(68degFDB)	kcal = kW x 860
Outdoor :	35degCDB(95degFDB)	35degCDB(95degFDB)	7degCDB/6degCWB (45degFDB/43degFWB)	Btu/h = kW x 3,412
Pipe length :	7.5m(24-9/16ft)	5m(16-3/8ft)	7.5m(24-9/16ft)	cfm = m^3/min x 35.31
Level difference :	0m(0ft)	0m(0ft)	0m(0ft)	lb = kg/0.4536

*Nominal condition *1,*3 are subject to JIS B8615-1

4 External static pressure option is available (30Pa, 60Pa/3.1mmH_2O, 6.1mmH_2O)

*Above specification data is subject to rounding variation.

PUHY-EP200YHM-A(-BS)

Ref. : PUHY_YHM-A_EXD_EUDB_EP200_Y1
Unit : mm

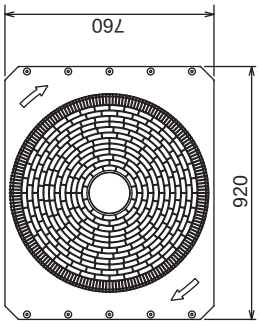

Top view

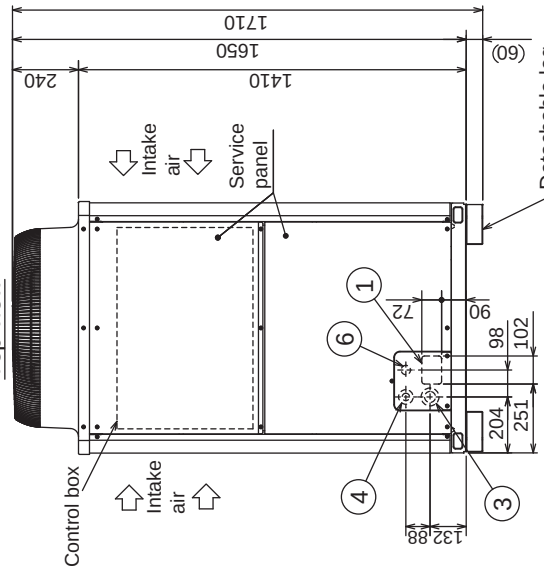

Front view

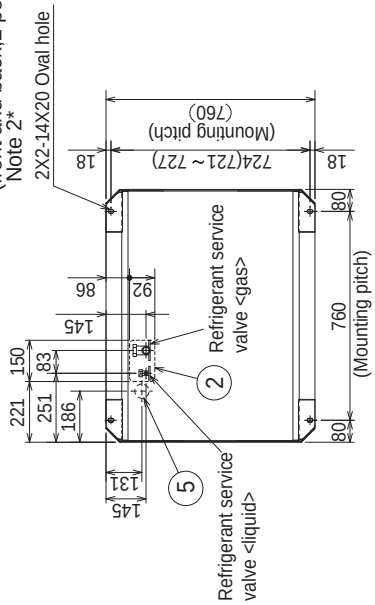

Bottom view

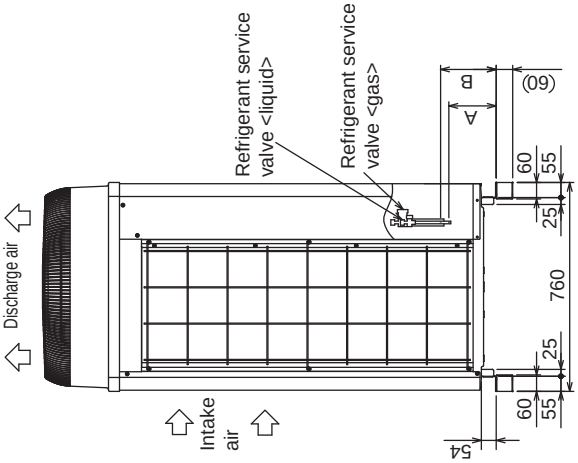

Left side view

<Accessories>
● Connecting pipe
<Gas> •Elbow(ID25.4XOD25.4) 1pc.
•Pipe (ID25.4XOD19.05) 1pc.
<Liquid> •Pipe (ID9.52XOD9.52) 1pc.

Note1. Please refer to the next page for information regarding necessary spacing around the unit and foundation work.
2. The detachable leg can be removed at site.
3. At brazing of pipes,wrap the refrigerant service valve with wet cloth and keep the temperature of refrigerant service valve under 120°C.

NO.	Usage		Specifications
①	For pipes	Front through hole	102X72 Knockout hole
②		Bottom through hole	150X92 Knockout hole
③	For wires	Front through hole	ø65 or ø40 Knockout hole
④		Front through hole	ø52 or ø27 Knockout hole
⑤		Bottom through hole	ø52 Knockout hole
⑥	For transmission cables	Front through hole	ø34 Knockout hole

Connecting pipe specifications

Model	Position dimensions for the refrigerant service valve		Connection specifications for the refrigerant service valve *1	
	Liquid	Gas	Liquid	Gas
	A	B		
PUHY-EP200YHM	142	170	ø9.52 Brazed	ø19.05 Brazed

*1 Connect by using the connecting pipes (for bottom piping and front piping) that are supplied.

PUHY-EP200YHM-A(-BS)

Y(HIGH COP)

1.Required space around the unit

● In case of single installation

① Secure enough space around the unit as shown in the figure below.

- With a space of at least 300mm to the wall on the back of the unit
- With a space of at least 100mm to the wall on the back of the unit

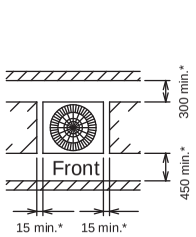

<Top view>

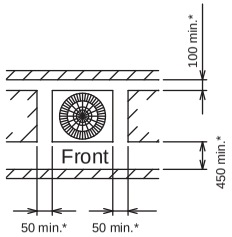

<Top view>

<Unit:mm>

② When the height of the walls on the front,back or on the sides<H> exceeds the wall height limit as defined below add the height that exceeds the height limit <h> to the figures that are marked with an asterisk.

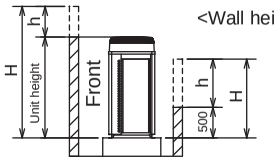

<Side view>

<Wall height limit> Front :Up to the unit height
Back :Up to 500mm from the unit bottom
Side :Up to the unit height

● In case of collective installation

① When multiple units are installed adjacent to each other, secure enough space to allow for air circulation and walkway between groups of units as shown in the figures below.
② At least two sides must be left open.
③ As with the single installation, add the height that exceeds the height limit<h> to the figures that are marked with an asterisk.

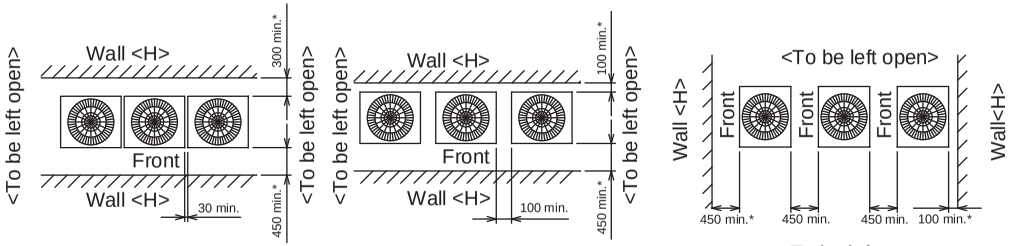

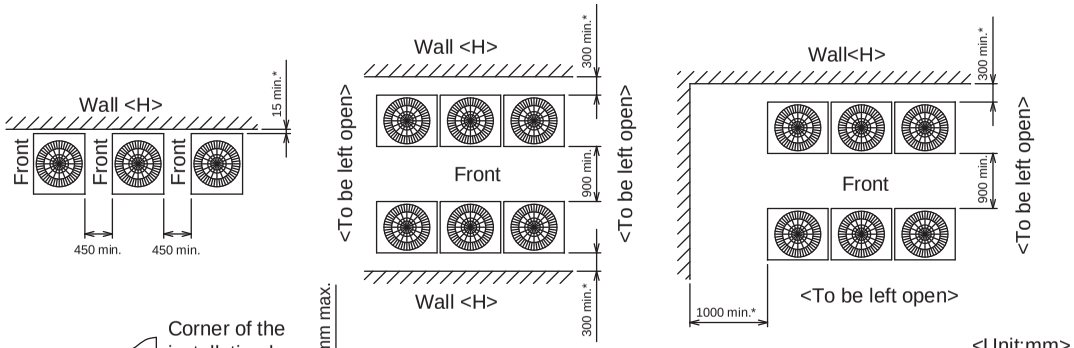

<Unit:mm>

2.Foundation work

① Take into consideration the surface strength,water drainage route, piping route,and wiring route when preparing the installation site. <Note that the drain water comes out of the unit during operation.>
② Build the foundation in such way that the corner of the installation leg is securely supported as shown in the right figure.(Fig.A,B) When using a rubber isolating cushion, please ensure it is large enough to cover the entire width of each of the unit's legs.
③ The protrusion length of the anchor bolt must not exceed 30mm.(Fig.A,B)
④ Use four fixing plates as shown in the right figure <field supply required> when using post-installed anchor bolts.(Fig.C,D)
⑤ To prevent small animals and water from entering the unit and damaging its parts, close the gap around the edges of through holes for pipes and wires with filler plates <field supply required>.
⑥ When the pipes or cables are routed at the bottom of the unit, make sure that the through hole at the base of the unit does not get blocked with the installation base.
⑦ Refer to the Installation Manual when installing units on an installation base.

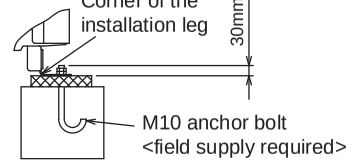

Fig.A (without detachable legs)

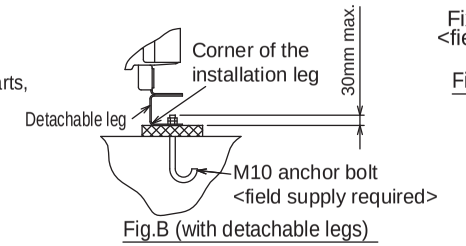

Fig.B (with detachable legs)

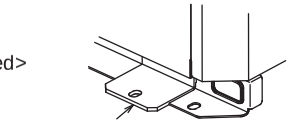

Fig.C (without detachable legs)

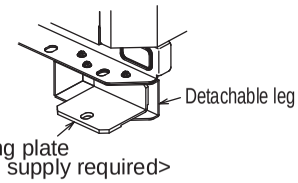

Fig.D (with detachable legs)

Ref. : PUHY_YHM-A_EXD_EUDB_EP200_Y2
Unit : mm

PUHY-EP250, 300YHM-A(-BS)

Ref. : PUHY-YHM-A_EXD_EUDB_EP250-EP300_Y1

Unit : mm

<Accessories>

● Connecting pipe

<Gas>	·Elbow(ID25.4 x OD25.4)	1pc.
	·Pipe (ID25.4 x OD22.2)	1pc.
<Liquid>	·Pipe (ID15.88 x OD15.88)	1pc.
	·Pipe (ID15.88 x OD9.52)	1pc.
	·Pipe (ID15.88 x OD12.7)	1pc.

Note 1. Please refer to the next page for information regarding necessary spacing around the unit and foundation work.
2. The detachable leg can be removed at site.
3. At brazing of pipes,wrap the refrigerant service valve with wet cloth and keep the temperature of refrigerant service valve under 120°C.

NO.	Usage		Specifications
①	For pipes	Front through hole	102 x 72 Knockout hole
②		Bottom through hole	150 x 94 Knockout hole
③	For wires	Front through hole	ø65 or ø40 Knockout hole
④		Front through hole	ø52 or ø27 Knockout hole
⑤		Bottom through hole	ø65 Knockout hole
⑥	For transmission cables	Front through hole	ø34 Knockout hole

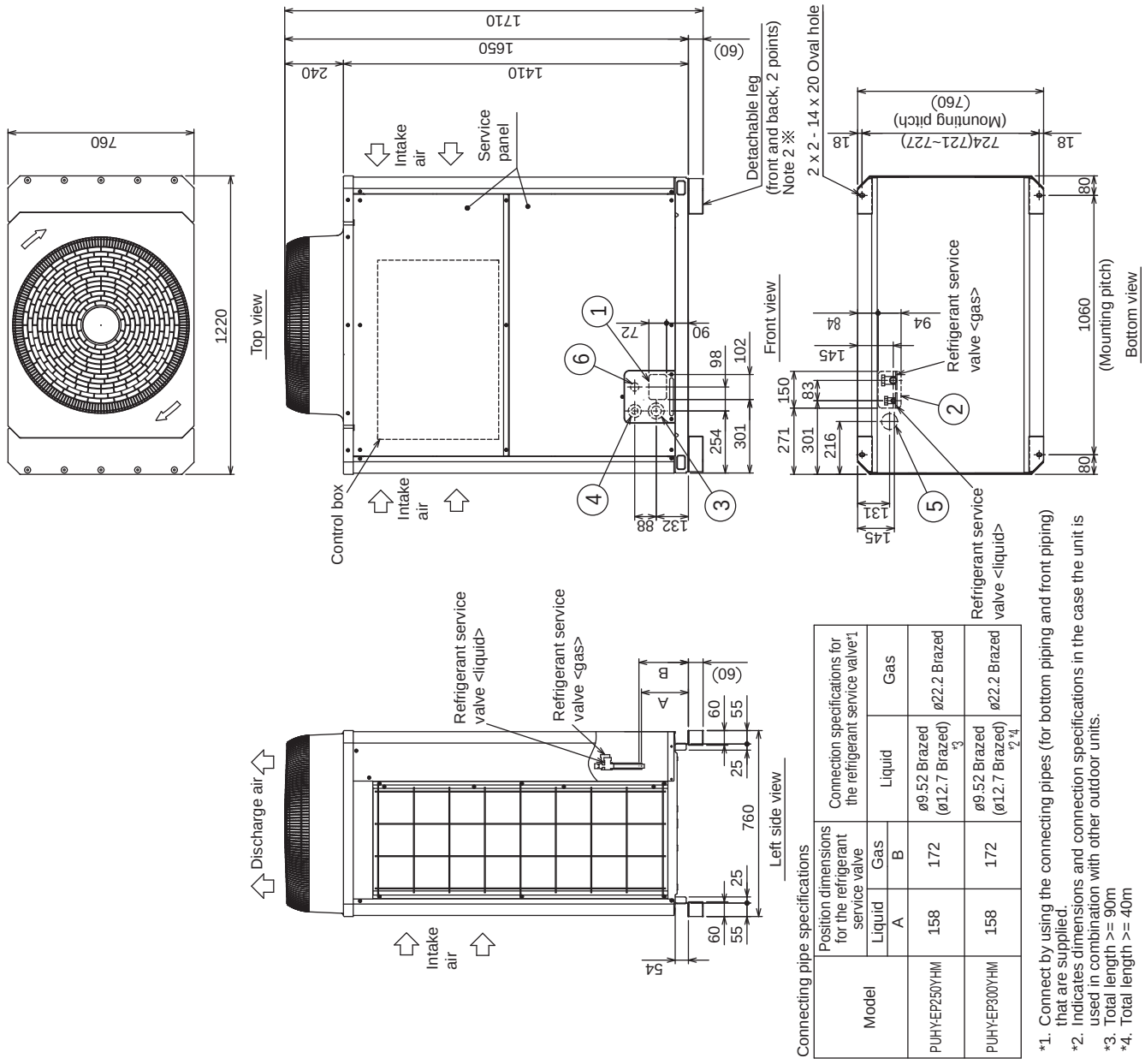

Connecting pipe specifications

Model	Position dimensions for the refrigerant service valve		Connection specifications for the refrigerant service valve*1	
	Liquid A	Gas B	Liquid	Gas
PUHY-EP250YHM	158	172	ø9.52 Brazed (ø12.7 Brazed) *3	ø22.2 Brazed
PUHY-EP300YHM	158	172	ø9.52 Brazed (ø12.7 Brazed) *2,*4	ø22.2 Brazed

*1. Connect by using the connecting pipes (for bottom piping and front piping) that are supplied.
*2. Indicates dimensions and connection specifications in the case the unit is used in combination with other outdoor units.
*3. Total length >= 90m
*4. Total length >= 40m

Y(HIGH COP)

PUHY-EP250, 300YHM-A(-BS)

Ref. : PUHY-YHM-A_EXD_EUDB_EP250-EP300_Y2
Unit : mm

1. Required space around the unit

● In case of single installation

① Secure enough space around the unit as shown in the figure below.

· With a space of at least 300mm to the wall on the back of the unit

· With a space of at least 100mm to the wall on the back of the unit

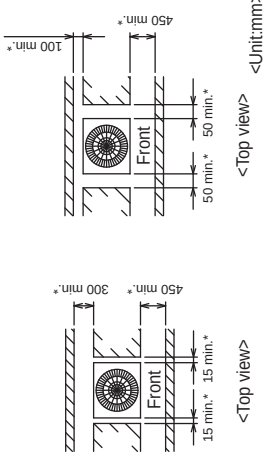

<Top view> <Top view> <Unit:mm>

② When the height of the walls on the front, back or on the sides <H> exceeds the wall height limit as defined below add the height that exceeds the height limit <h> to the figures that are marked with an asterisk.

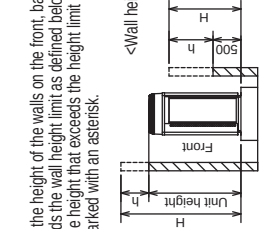

<Side view>

<Wall height limit> Front : Up to the unit height
Back : Up to 500mm from the unit bottom
Side : Up to the unit height

● In case of collective installation

① When multiple units are installed adjacent to each other, secure enough space to allow for air circulation and walkway between groups of units as shown in the figures below.
② At least two sides must be left open.
③ As with the single installation, add the height that exceeds the height limit <h> to the figures that are marked with an asterisk.

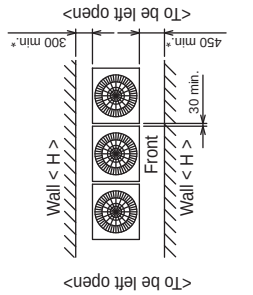

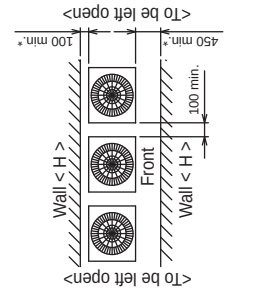

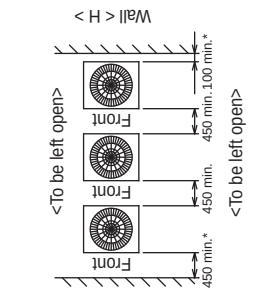

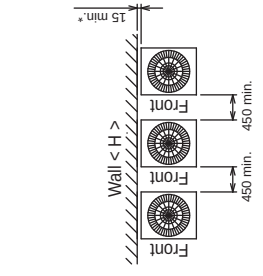

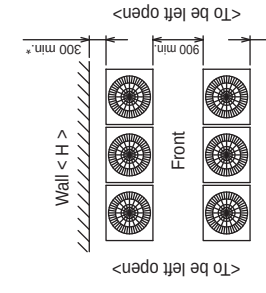

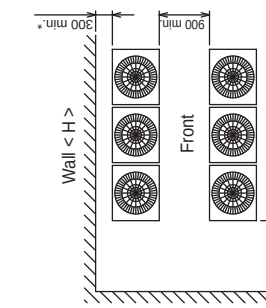

<Unit:mm>

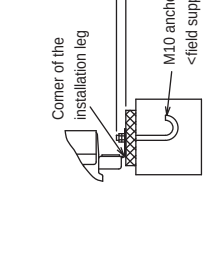

Fig. A (without detachable legs)

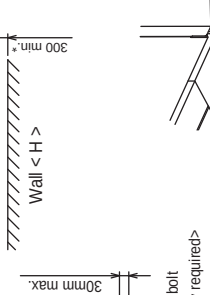

Fig. C (without detachable legs)

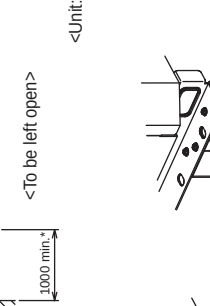

Fig. D (with detachable legs)

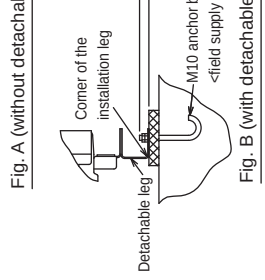

Fig. B (with detachable legs)

2. Foundation work

① Take into consideration the surface strength, water drainage route, piping route,and wiring route when preparing the installation site. <Note that the drain water comes out of the unit during operation.>
② Build the foundation in such way that the corner of the installation leg is securely supported as shown in the right figure. (Fig. A, B) When using a rubber isolating cushion, please ensure it is large enough to cover the entire width of each of the unit's legs.
③ The protrusion length of the anchor bolt must not exceed 30mm. (Fig. A, B)
④ Use four fixing plates as shown in the right figure <field supply required> when using post-installed anchor bolts. (Fig. C, D)
⑤ To prevent small animals and water and snow from entering the unit and damaging its parts, close the gap around the edges of through holes for pipes and wires with filler plates <field supply required>.
⑥ When the pipes or cables are routed at the bottom of the unit, make sure that the through hole at the base of the unit does not get blocked with the installation base.
⑦ Refer to the Installation Manual when installing units on an installation base.

PUHY-EP400YSHM-A(-BS)

Ref. : PUHY_YHM-A_EXD_EUDB_EP400
Unit : mm

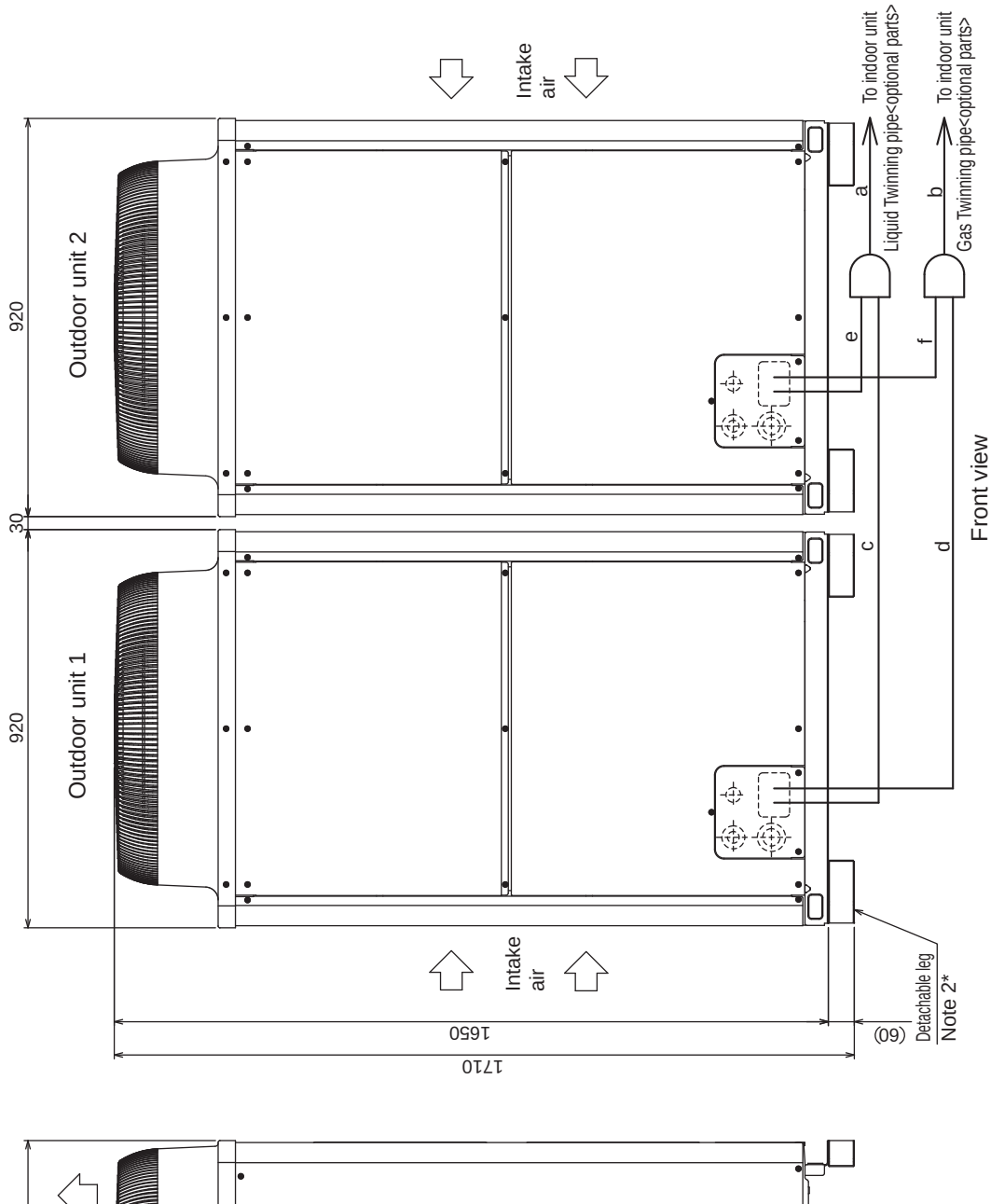

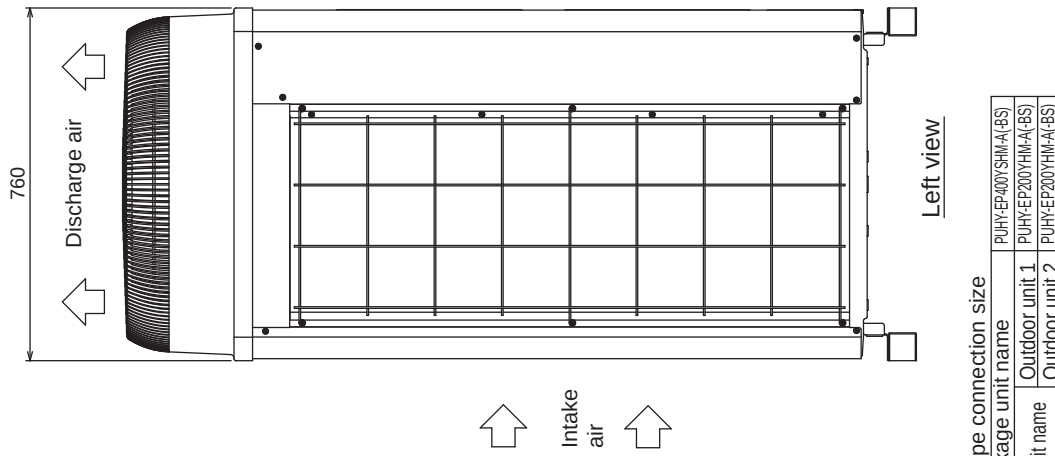

	Unit model	Liquid	Gas
Twinning pipe ~ Outdoor unit	EP200	c or e	d or f
		ø9.52	ø19.05

Twinning pipe connection size

Package unit name		PUHY-EP400YSHM-A(-BS)
Component unit name	Outdoor unit 1	PUHY-EP200YHM-A(-BS)
	Outdoor unit 2	PUHY-EP200YHM-A(-BS)
Outdoor Twinning Kit(optional parts)		CMY-Y100VBK2
Indoor unit~Twinning pipe	Liquid a	ø12.7
	Gas b	ø28.58

Note 1.Connect the pipes as shown in the figure above. Refer to the table above for the pipe size.
2.The detachable leg can be removed at site.
3.Twinning pipes should not be tilted more than 15 degrees from the horizontal plane.
Be sure to see the Installation Manual for details of Twinning pipe installation.
4.The pipe section before the Twinning pipe (sections "a" and "b" in the figure) must have at least 500mm of straight section
(*including the straight pipe that is supplied with the Twinning pipe).
5.Only use the Twinning pipe by Mitsubishi (optional parts).

PUHY-EP450,500YSHM-A(1)(-BS)

Ref. : PUHY-YSHM-A_EXD_EUDB_EP450-EP500
Unit : mm

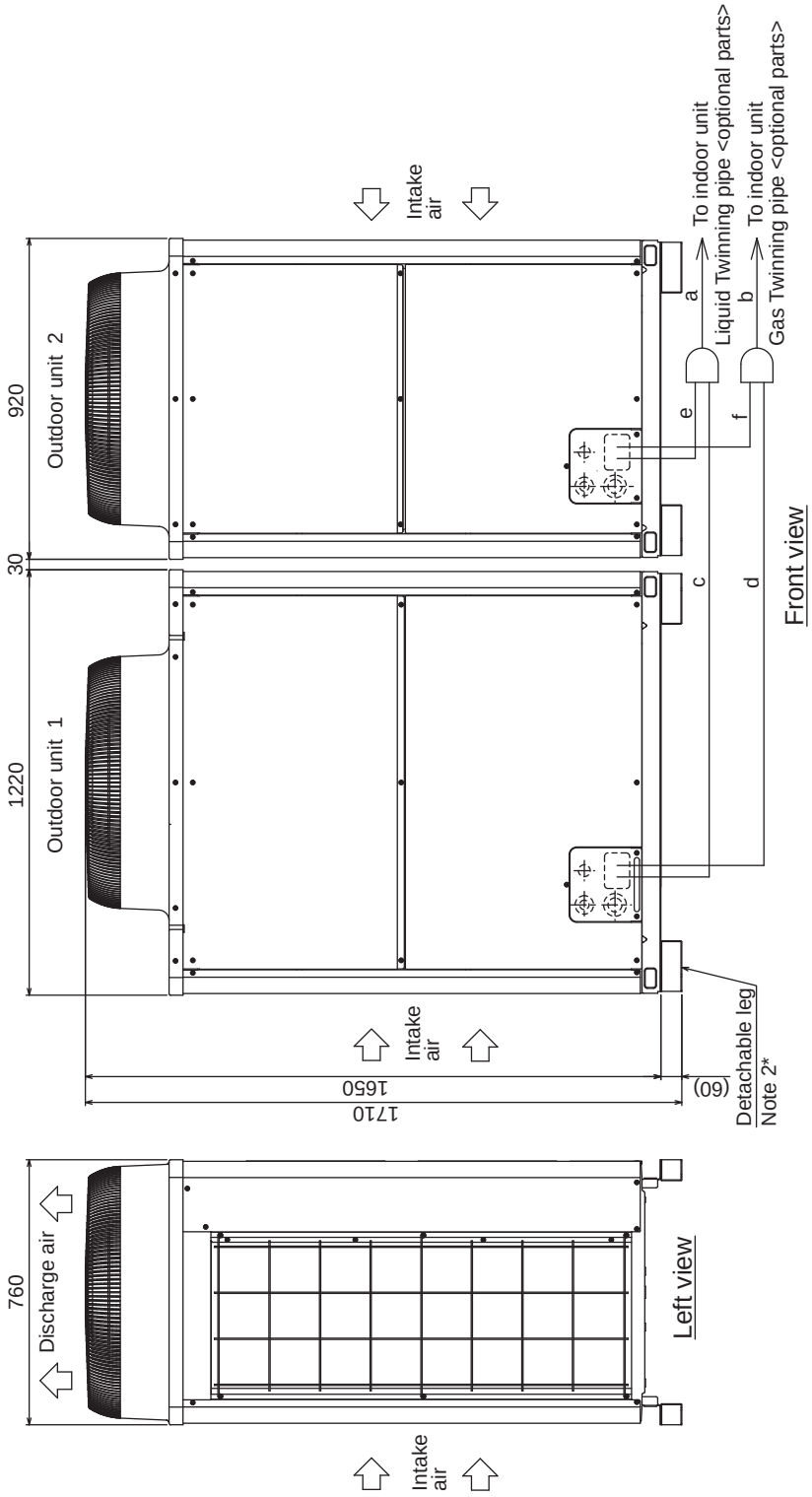

Twinning pipe connection size

Package unit name		PUHY-EP450YSHM-A1(-BS)	PUHY-EP500YSHM-A(-BS)
Component unit name	Outdoor unit 1	PUHY-EP250YHM-A(-BS)	PUHY-EP300YHM-A(-BS)
	Outdoor unit 2	PUHY-EP200YHM-A(-BS)	PUHY-EP200YHM-A(-BS)
Outdoor Twinning Kit (optional parts)		CMY-Y100VBK2	
Indoor unit ~ Twinning pipe	Liquid a	ø15.88	
	Gas b	ø28.58	

	Unit model	Liquid	Gas
Twinning pipe ~ Outdoor unit	EP200	c or e	d or f
		ø9.52	ø19.05
	EP250	ø9.52	ø22.2
	EP300	ø12.7	ø22.2

Note 1. Connect the pipes as shown in the figure above. Refer to the table above for the pipe size.
2. The detachable leg can be removed at site.
3. Twinning pipes should not be tilted more than 15 degrees from the horizontal plane.
Be sure to see the Installation Manual for details of Twinning pipe installation.
4. The pipe section before the Twinning pipe (sections "a" and "b" in the figure) must have at least 500mm of straight section (* including the straight pipe that is supplied with the Twinning pipe).
5. Only use the Twinning pipe by Mitsubishi (optional parts).

PUHY-EP550, 600, 650YSHM-A(1)(-BS)

Ref. : PUHY-YSHM-A_EXD_EUDB_EP550-EP650
Unit : mm

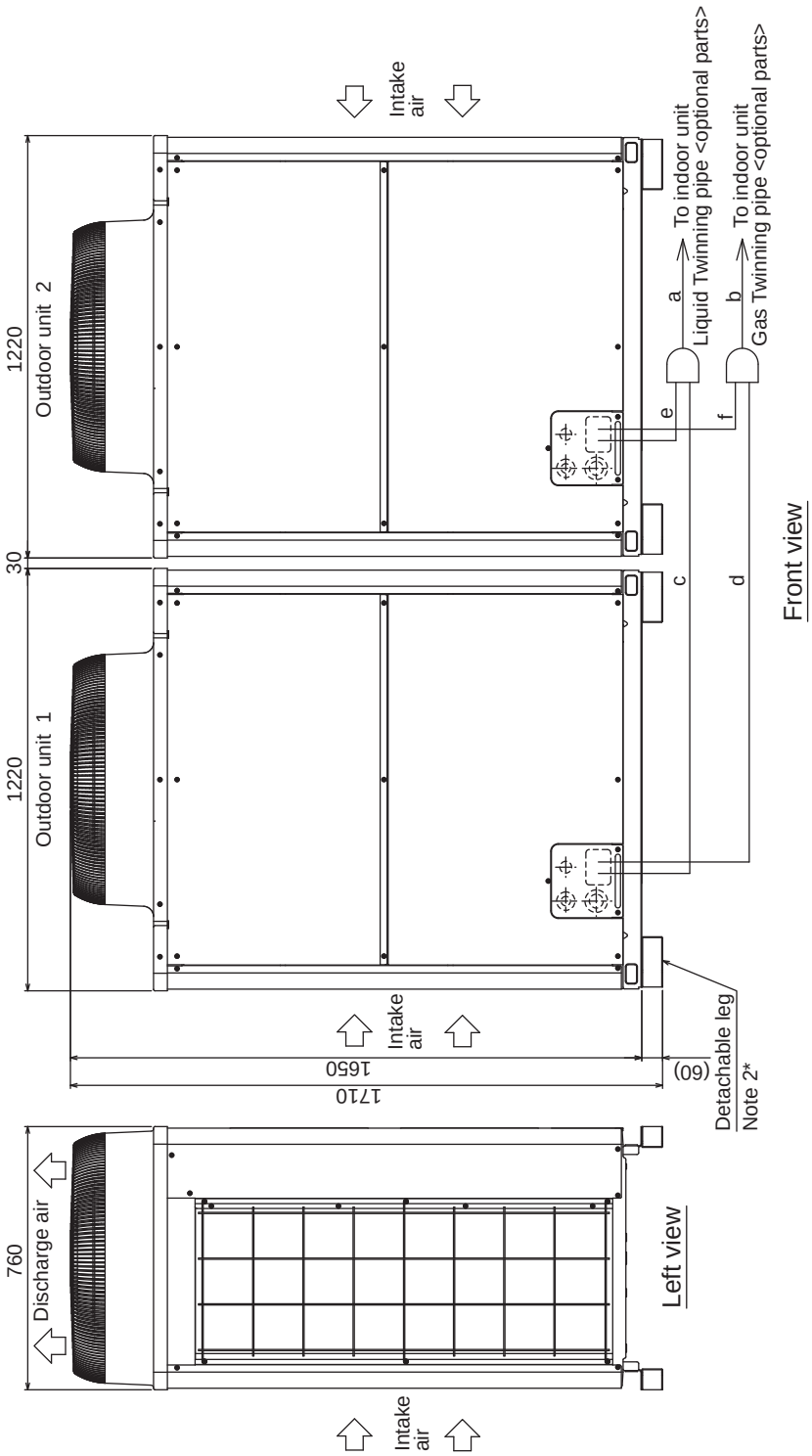

	Unit model	Liquid	Gas
Twinning pipe ~ Outdoor unit		c or e	d or f
	P350	ø12.7	ø28.58
	EP250	ø9.52	ø22.2
	EP300	ø12.7	ø22.2

Twinning pipe connection size

Package unit name			PUHY-EP550YSHM-A1(-BS)	PUHY-EP600YSHM-A(-BS)	PUHY-EP650YSHM-A(-BS)
Component unit name	Outdoor unit 1		PUHY-EP300YHM-A(-BS)	PUHY-EP300YHM-A(-BS)	PUHY-P350YHM-A(-BS)
	Outdoor unit 2		PUHY-EP250YHM-A(-BS)	PUHY-EP300YHM-A(-BS)	PUHY-EP300YHM-A(-BS)
Outdoor Twinning Kit (optional parts)			CMY-Y100VBK2		
Indoor unit ~ Twinning pipe		Liquid	a	ø15.88	
		Gas	b	ø28.58	

Note 1. Connect the pipes as shown in the figure above. Refer to the table above for the pipe size.
2. The detachable leg can be removed at site.
3. Twinning pipes should not be tilted more than 15 degrees from the horizontal plane.
Be sure to see the Installation Manual for details of Twinning pipe installation.
4. The pipe section before the Twinning pipe (sections "a" and "b" in the figure) must have at least 500mm of straight section
(* including the straight pipe that is supplied with the Twinning pipe).
5. Only use the Twinning pipe by Mitsubishi (optional parts).

PUHY-EP700YSHM-A(-BS)

Ref. : PUHY_YHM-A_EXD_EUDB_EP700
Unit : mm

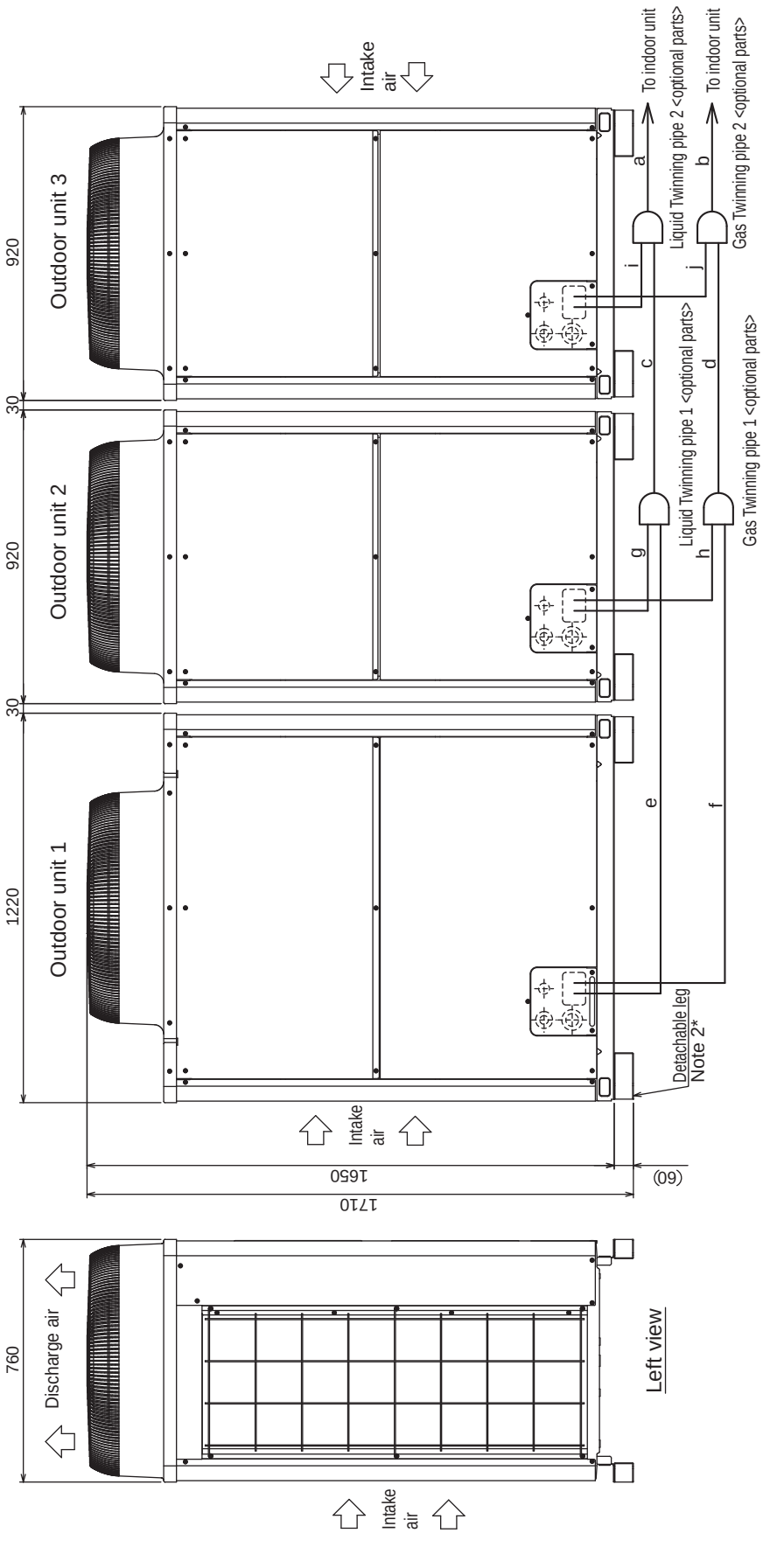

	Unit model	Liquid	Gas
Twinning pipe ~ Outdoor unit		e or g or i	f or h or j
	EP200	ø9.52	ø19.05
	EP300	ø12.7	ø22.2

Twinning pipe connection size

Package unit name			PUHY-EP700YSHM-A(-BS)
Component unit name	Outdoor unit 1		PUHY-EP300YHM-A(-BS)
	Outdoor unit 2		PUHY-EP200YHM-A(-BS)
	Outdoor unit 3		PUHY-EP200YHM-A(-BS)
Outdoor Twinning Kit(optional parts)			CMY-Y300VBK2
Indoor unit~ Twinning pipe 2	Liquid	a	ø19.05
	Gas	b	ø34.93
Twinning pipe 1~Twinning pipe 2	Liquid	c	ø19.05
	Gas	d	ø34.93

Note 1. Connect the pipes as shown in the figure above. Refer to the table above for the pipe size.
2. The detachable leg can be removed at site.
3. Twinning pipes should not be tilted more than 15 degrees from the horizontal plane.
Be sure to see the Installation Manual for details of Twinning pipe installation.
4. The pipe section before the Twinning pipe (sections "a", "b", "c" and "d" in the figure) must have at least 500mm of straight section
(* including the straight pipe that is supplied with the Twinning pipe).
5. Only use the Twinning pipe by Mitsubishi (optional parts).

2. EXTERNAL DIMENSIONS

PUHY-EP750, 800YSHM-A(1)(-BS)

Ref. : PUHY-YSHM-A_EXD_EUDB_EP750-EP800

Unit : mm

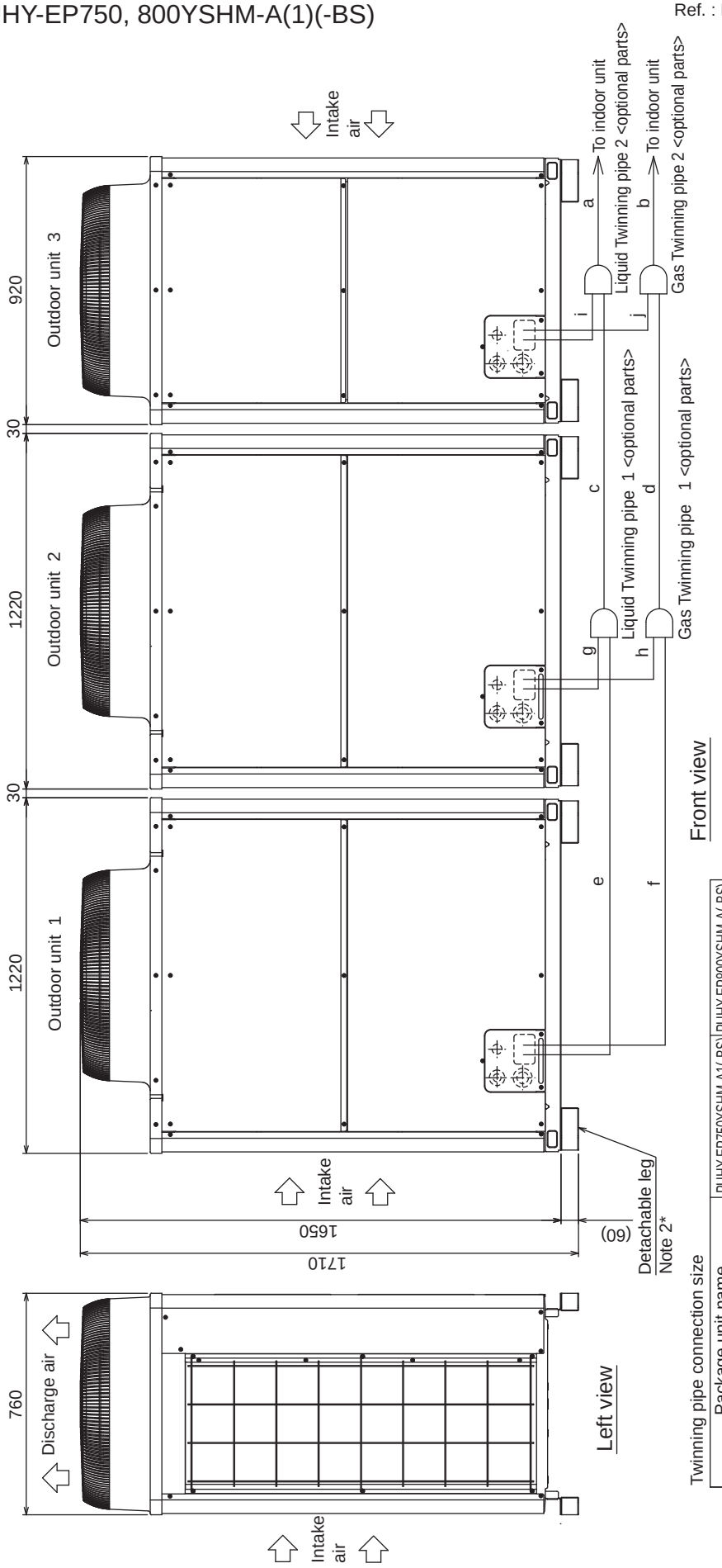

Twinning pipe connection size

Package unit name			PUHY-EP750YSHM-A1(-BS)	PUHY-EP800YSHM-A(-BS)
Component unit name	Outdoor unit 1		PUHY-EP300YHM-A(-BS)	PUHY-EP300YHM-A(-BS)
	Outdoor unit 2		PUHY-EP250YHM-A(-BS)	PUHY-EP300YHM-A(-BS)
	Outdoor unit 3		PUHY-EP200YHM-A(-BS)	PUHY-EP200YHM-A(-BS)
Outdoor Twinning Kit (optional parts)			CMY-Y300VBK2	
Indoor unit ~ Twinning pipe 2	Liquid	a	ø19.05	
	Gas	b	ø34.93	
Twinning pipe 1 ~ Twinning pipe 2	Liquid	c	ø19.05	
	Gas	d	ø34.93	

	Unit model	Liquid	Gas
Twinning pipe ~ Outdoor unit	EP200	ø9.52	ø19.05
	EP250	ø9.52	ø22.2
	EP300	ø12.7	ø22.2

Note 1. Connect the pipes as shown in the figure above. Refer to the table above for the pipe size.
2. The detachable leg can be removed at site.
3. Twinning pipes should not be tilted more than 15 degrees from the horizontal plane.
Be sure to see the Installation Manual for details of Twinning pipe installation.
4. The pipe section before the Twinning pipe (sections "a", "b", "c" and "d" in the figure) must have at least 500mm of straight section
(* including the straight pipe that is supplied with the Twinning pipe).
5. Only use the Twinning pipe by Mitsubishi (optional parts).

PUHY-EP850, 900YSHM-A(1)(-BS)

Ref. : PUHY-YSHM-A_EXD_EUDB_EP850-EP900
Unit : mm

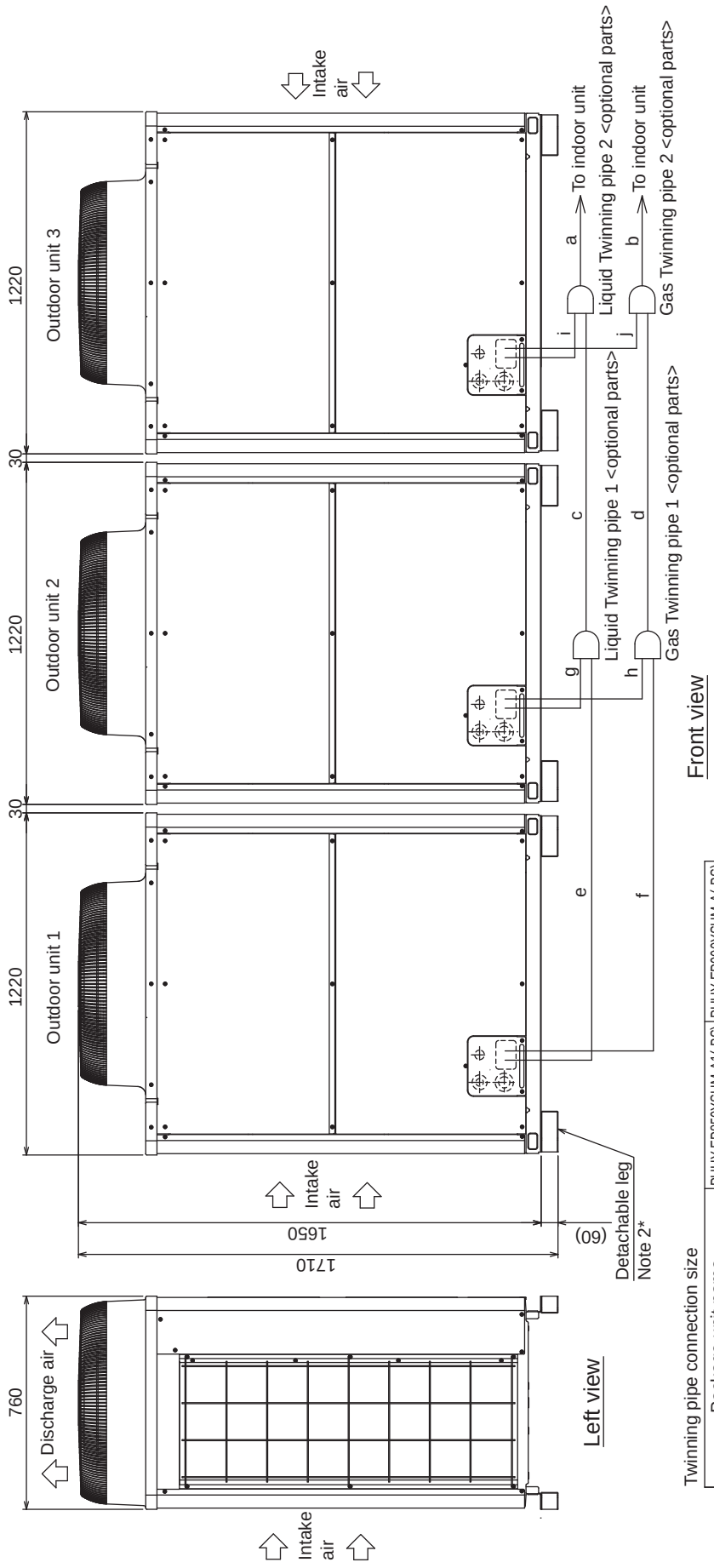

Twinning pipe connection size

Package unit name			PUHY-EP850YSHM-A1(-BS)	PUHY-EP900YSHM-A(-BS)
Component unit name	Outdoor unit 1		PUHY-EP300YHM-A(-BS)	PUHY-EP300YHM-A(-BS)
	Outdoor unit 2		PUHY-EP300YHM-A(-BS)	PUHY-EP300YHM-A(-BS)
	Outdoor unit 3		PUHY-EP250YHM-A(-BS)	PUHY-EP300YHM-A(-BS)
Outdoor Twinning Kit (optional parts)			CMY-Y300VBK2	
Indoor unit ~ Twinning pipe 2	Liquid	a	ø19.05	
	Gas	b	ø41.28	
Twinning pipe 1 ~ Twinning pipe 2	Liquid	c	ø19.05	
	Gas	d	ø34.93	

	Unit model	Liquid	Gas
Twinning pipe ~ Outdoor unit		e or g or i	f or h or j
	EP250	ø9.52	ø22.2
	EP300	ø12.7	ø22.2

Note 1. Connect the pipes as shown in the figure above. Refer to the table above for the pipe size.
2. The detachable leg can be removed at site.
3. Twinning pipes should not be tilted more than 15 degrees from the horizontal plane.
Be sure to see the Installation Manual for details of Twinning pipe installation.
4. The pipe section before the Twinning pipe (sections "a", "b", "c" and "d" in the figure) must have at least 500mm of straight section
(* including the straight pipe that is supplied with the Twinning pipe).
5. Only use the Twinning pipe by Mitsubishi (optional parts).

PUHY-P200, P250, P300, EP200YHM-A (-BS)

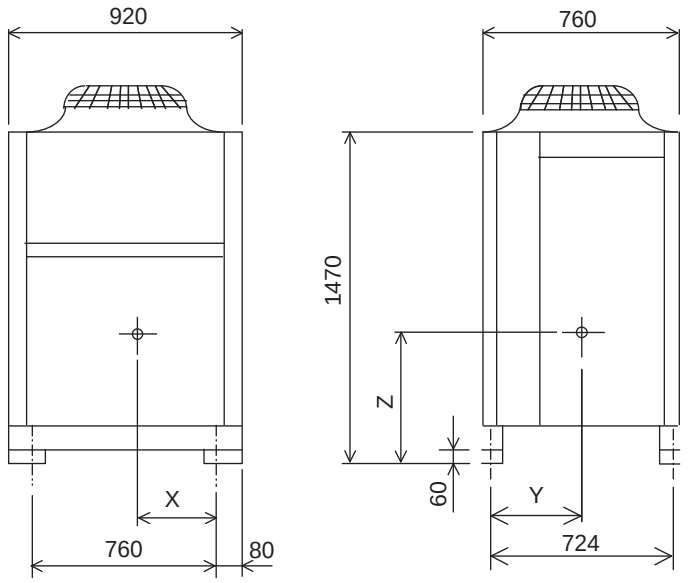

Model	X	Y	Z
PUHY-P200YHM-A (-BS)	330	309	647
PUHY-P250YHM-A (-BS)	334	329	652
PUHY-P300YHM-A (-BS)	320	319	632
PUHY-EP200YHM-A (-BS)	334	329	652

PUHY-P350, P400, P450, EP250, EP300YHM-A (-BS)

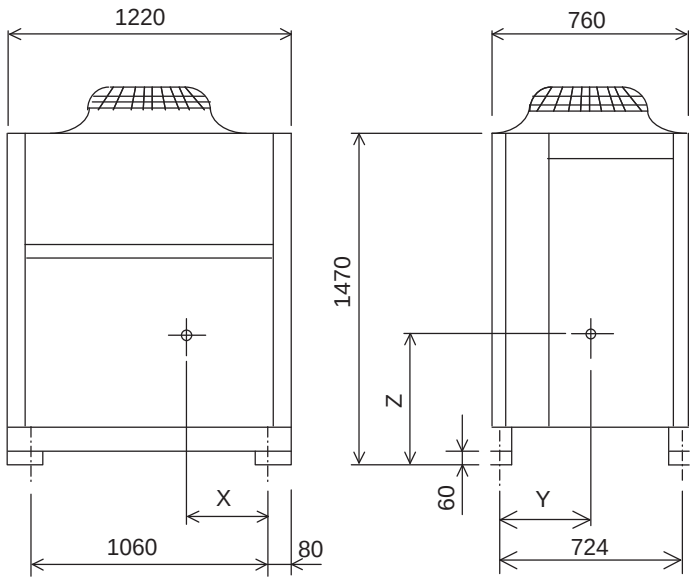

Model	X	Y	Z
PUHY-P350YHM-A (-BS)	440	329	630
PUHY-P400YHM-A (-BS)	440	329	630
PUHY-P450YHM-A (-BS)	440	329	630
PUHY-EP250YHM-A (-BS)	440	329	630
PUHY-EP300YHM-A (-BS)	440	329	630

Y(HIGH COP)

PUHY-P200, 250, 300, 350, 400, 450YHM-A(-BS)
PUHY-EP200, 250, 300YHM-A(-BS)

Ref. :PUHY_YHM-A_EWD_EUDB_ALL

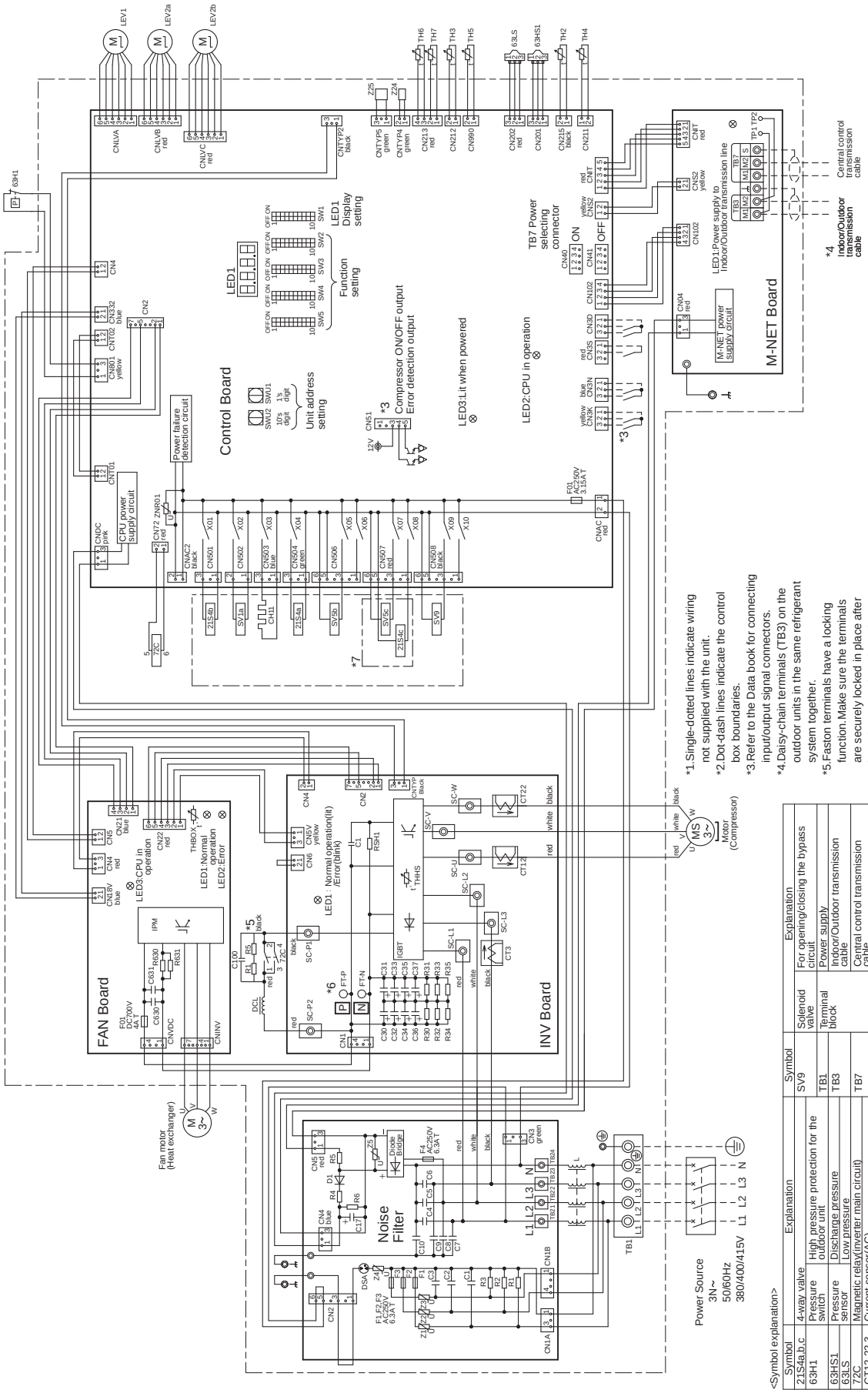

*1.Single-dotted lines indicate wiring not supplied with the unit.
*2.Dot-dash lines indicate the control box boundaries.
*3.Refer to the Data book for connecting input/output signal connectors.
*4.Daisy-chain terminals (TB3) on the outdoor units in the same refrigerant system together.
*5.Faston terminals have a locking function.Make sure the terminals are securely locked in place after insertion.Press the tab on the terminals to removed them.
*6.Control box houses high-voltage parts. Before inspecting the inside of the control box,turn off the power,keep the unit off for at least 10 minutes, and confirm that the voltage between FT-P and FT-N on INV Board has dropped to DC20V or less.

*7.Difference of appliance

Model name	Appliance
P200/P250/P300 EP200	*7 do not exist
P350/P400/P450 EP250/EP300	*7 exist

<Symbol explanation>

Symbol	Explanation	Symbol	Explanation	Symbol	Explanation
21,S4a,b,c	4-way valve	SV9	Solenoid valve		For opening/closing the bypass circuit
63H1	Pressure switch: High pressure protection for the outdoor unit	TB1	Terminal block		Power supply
63HS1	Pressure sensor: Discharge pressure	TB3	Terminal block		Indoor/Outdoor transmission cable
63LS	Pressure sensor: Low pressure				Central control transmission cable
72C	Magnetic relay(Inverter main circuit)	TB7			Subcool bypass outlet temperature
CT12,22,3	Current sensor(AC)	TH2	Thermistor		Pipe temperature
CH11	Crankcase heater(for heating the compressor)	TH3			Discharge pipe temperature
DCL	DC reactor	TH4			ACC inlet pipe temperature
LEV1	Linear expansion valve: HIC bypass,Controls refrigerant flow in HIC circuit	TH5			Subcooled liquid refrigerant temperature
LEV2a,b	Linear expansion valve: Pressure control,Refrigerant flow rate control	TH6			OA temperature
SV1a	Solenoid valve: For opening/closing the bypass circuit under the O/S	TH7			Control box internal temperature
SV5b,c	Solenoid valve: Outdoor unit heat exchanger capacity control	THBOX			IGBT temperature
		THHS			Function setting connector
		Z24,25			

Measurement condition
PUHY-EP200YHM

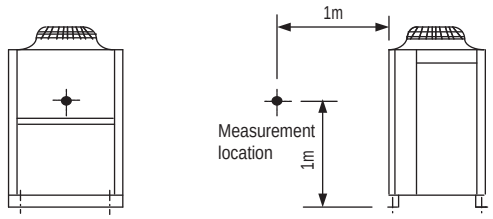

Sound level of PUHY-EP200YHM-A(-BS)

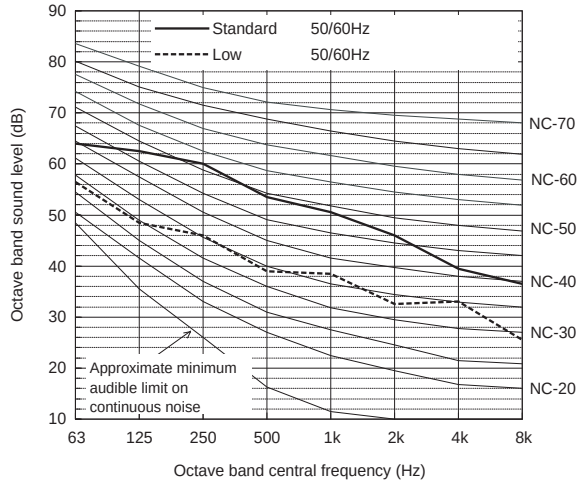

		63	125	250	500	1k	2k	4k	8k	dB(A)
Standard	50/60Hz	64.0	62.5	60.0	53.5	50.5	46.0	39.5	36.5	57.0
Low Noise Mode	50/60Hz	56.5	48.5	46.0	39.0	38.5	32.5	33.0	25.5	44.0

When Low Noise Mode is set,the A/C system's capacity is limited. The system could return to normal operation from Low Noise Mode automatically in the case that the operation condition is severe.

Measurement condition
PUHY-EP250,300YHM

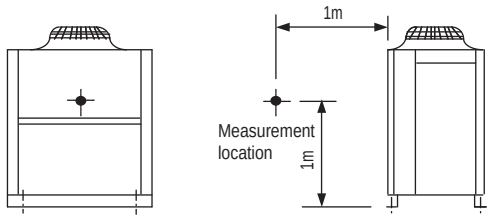

Sound level of PUHY-EP250YHM-A(-BS)

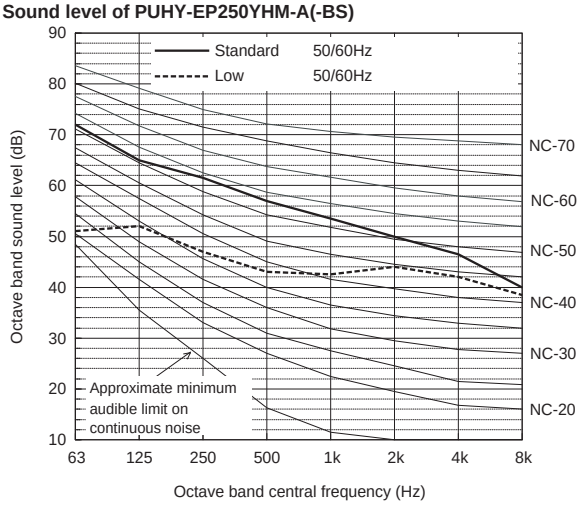

		63	125	250	500	1k	2k	4k	8k	dB(A)
Standard	50/60Hz	72.0	65.0	61.5	57.0	53.5	50.0	46.5	40.0	60.0
Low Noise Mode	50/60Hz	51.0	52.0	47.0	43.0	42.5	44.0	42.0	38.5	50.0

When Low Noise Mode is set,the A/C system's capacity is limited. The system could return to normal operation from Low Noise Mode automatically in the case that the operation condition is severe.

Sound level of PUHY-EP300YHM-A(-BS)

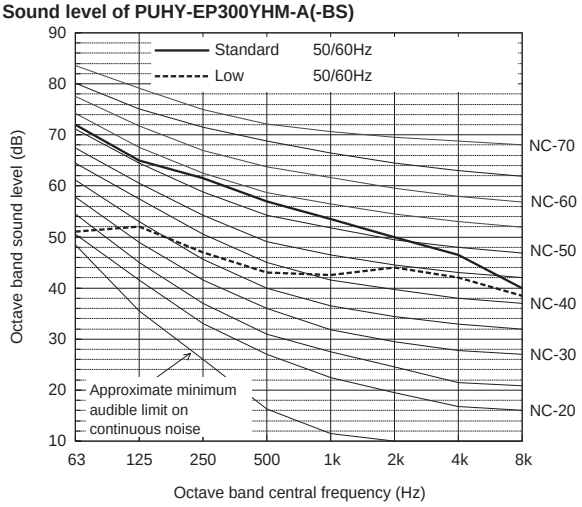

		63	125	250	500	1k	2k	4k	8k	dB(A)
Standard	50/60Hz	72.0	65.0	61.5	57.0	53.5	50.0	46.5	40.0	60.0
Low Noise Mode	50/60Hz	51.0	52.0	47.0	43.0	42.5	44.0	42.0	38.5	50.0

When Low Noise Mode is set,the A/C system's capacity is limited. The system could return to normal operation from Low Noise Mode automatically in the case that the operation condition is severe.

Measurement condition
PUHY-EP400,450,500,550,600,650YSHM

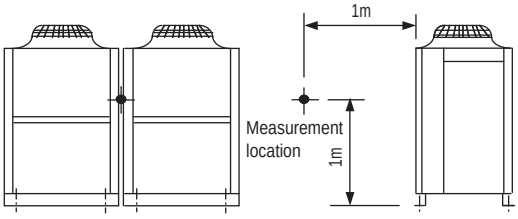

Sound level of PUHY-EP500YSHM-A(-BS)

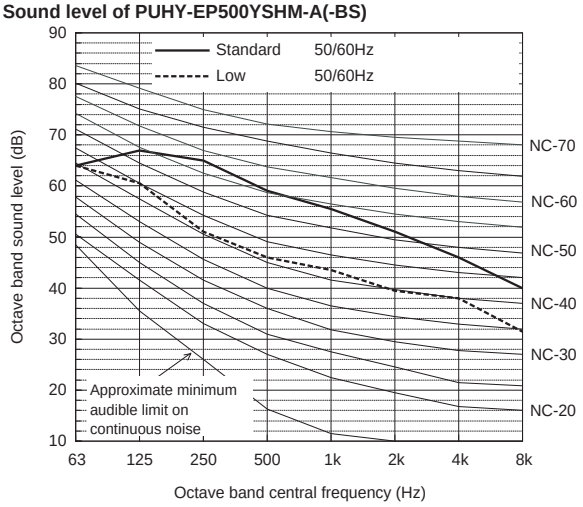

		63	125	250	500	1k	2k	4k	8k	dB(A)
Standard	50/60Hz	64.0	67.0	65.0	59.0	55.5	51.0	46.0	40.0	62.0
Low Noise Mode	50/60Hz	64.0	60.5	51.0	46.0	43.5	39.5	38.0	31.5	51.0

When Low Noise Mode is set,the A/C system's capacity is limited. The system could return to normal operation from Low Noise Mode automatically in the case that the operation condition is severe.

Sound level of PUHY-EP400YSHM-A(-BS)

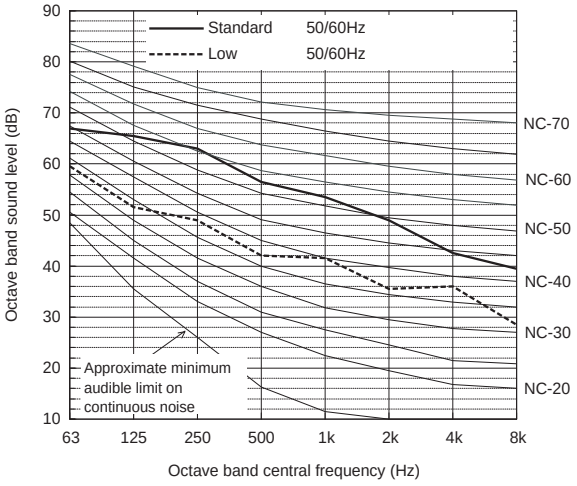

		63	125	250	500	1k	2k	4k	8k	dB(A)
Standard	50/60Hz	67.0	65.5	63.0	56.5	53.5	49.0	42.5	39.5	60.0
Low Noise Mode	50/60Hz	59.5	51.5	49.0	42.0	41.5	35.5	36.0	28.5	47.0

When Low Noise Mode is set,the A/C system's capacity is limited. The system could return to normal operation from Low Noise Mode automatically in the case that the operation condition is severe.

Sound level of PUHY-EP550YSHM-A1(-BS)

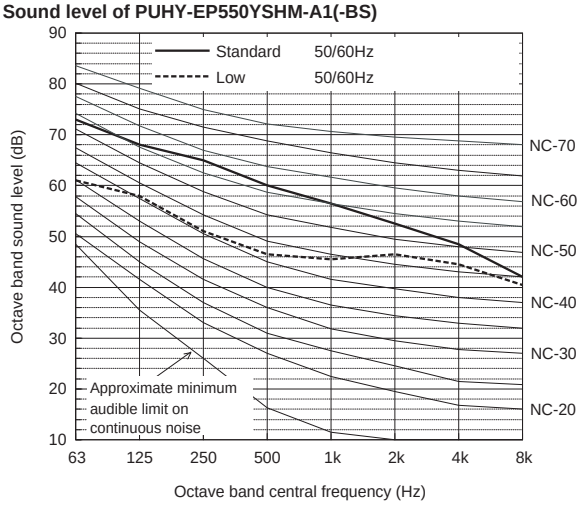

		63	125	250	500	1k	2k	4k	8k	dB(A)
Standard	50/60Hz	73.0	68.0	65.0	60.0	56.5	52.5	48.5	42.0	63.0
Low Noise Mode	50/60Hz	61.0	58.0	51.0	46.5	45.5	46.5	44.5	40.5	53.0

When Low Noise Mode is set,the A/C system's capacity is limited. The system could return to normal operation from Low Noise Mode automatically in the case that the operation condition is severe.

Sound level of PUHY-EP450YSHM-A1(-BS)

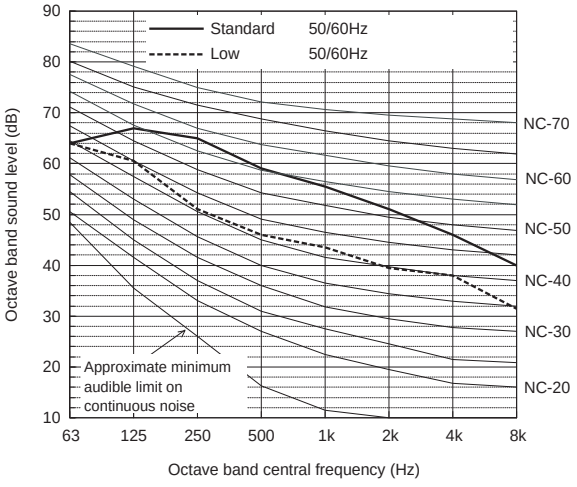

		63	125	250	500	1k	2k	4k	8k	dB(A)
Standard	50/60Hz	64.0	67.0	65.0	59.0	55.5	51.0	46.0	40.0	62.0
Low Noise Mode	50/60Hz	64.0	60.5	51.0	46.0	43.5	39.5	38.0	31.5	51.0

When Low Noise Mode is set,the A/C system's capacity is limited. The system could return to normal operation from Low Noise Mode automatically in the case that the operation condition is severe.

Sound level of PUHY-EP600YSHM-A(-BS)

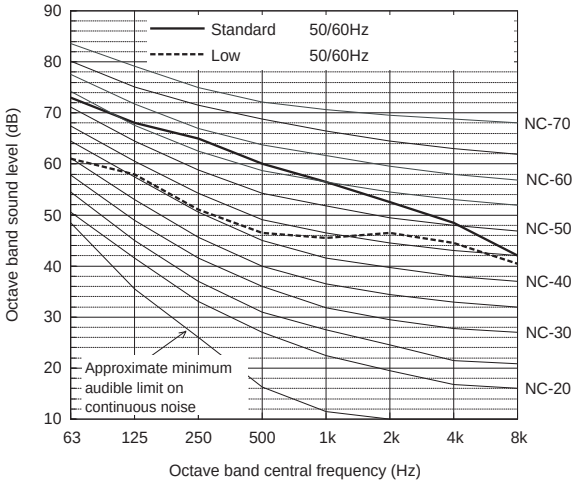

		63	125	250	500	1k	2k	4k	8k	dB(A)
Standard	50/60Hz	73.0	68.0	65.0	60.0	56.5	52.5	48.5	42.0	63.0
Low Noise Mode	50/60Hz	61.0	58.0	51.0	46.5	45.5	46.5	44.5	40.5	53.0

When Low Noise Mode is set,the A/C system's capacity is limited. The system could return to normal operation from Low Noise Mode automatically in the case that the operation condition is severe.

5. SOUND LEVELS

Sound level of PUHY-EP650YSHM-A(-BS)

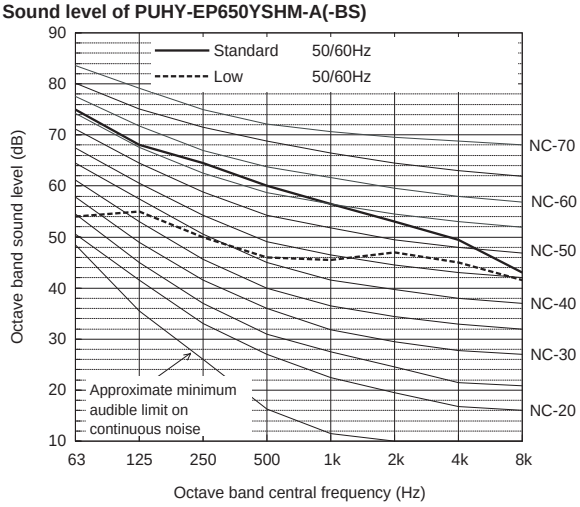

		63	125	250	500	1k	2k	4k	8k	dB(A)
Standard	50/60Hz	75.0	68.0	64.5	60.0	56.5	53.0	49.5	43.0	63.0
Low Noise Mode	50/60Hz	54.0	55.0	50.0	46.0	45.5	47.0	45.0	41.5	53.0

When Low Noise Mode is set,the A/C system's capacity is limited. The system could return to normal operation from Low Noise Mode automatically in the case that the operation condition is severe.

5. SOUND LEVELS

Measurement condition
PUHY-EP700,750,800,850,900YSHM

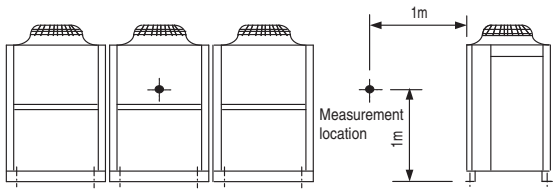

Sound level of PUHY-EP800YSHM-A(-BS)

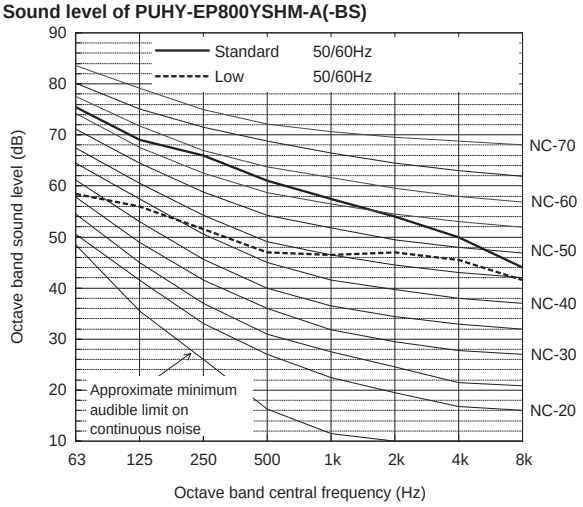

		63	125	250	500	1k	2k	4k	8k	dB(A)
Standard	50/60Hz	75.5	69.0	66.0	61.0	57.5	54.0	50.0	44.0	64.0
Low Noise Mode	50/60Hz	58.5	56.0	51.5	47.0	46.5	47.0	45.5	41.5	53.5

When Low Noise Mode is set,the A/C system's capacity is limited. The system could return to normal operation from Low Noise Mode automatically in the case that the operation condition is severe.

Sound level of PUHY-EP700YSHM-A(-BS)

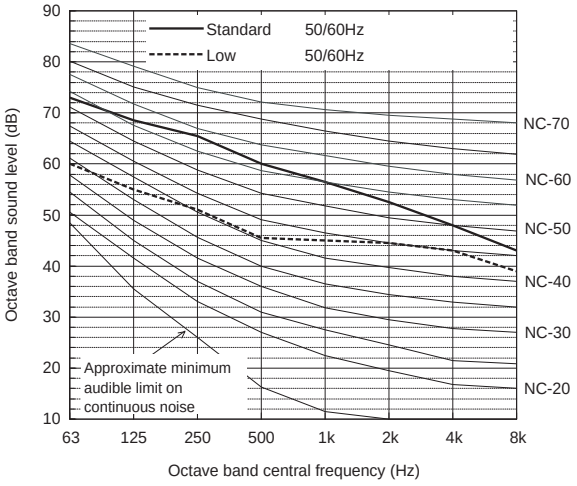

		63	125	250	500	1k	2k	4k	8k	dB(A)
Standard	50/60Hz	73.0	68.5	65.5	60.0	56.5	52.5	48.0	43.0	63.0
Low Noise Mode	50/60Hz	60.0	55.0	51.0	45.5	45.0	44.5	43.0	39.0	52.0

When Low Noise Mode is set,the A/C system's capacity is limited. The system could return to normal operation from Low Noise Mode automatically in the case that the operation condition is severe.

Sound level of PUHY-EP850YSHM-A1(-BS)

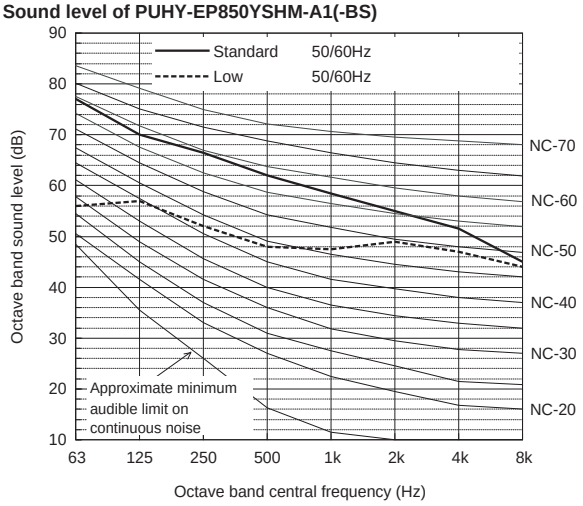

		63	125	250	500	1k	2k	4k	8k	dB(A)
Standard	50/60Hz	77.0	70.0	66.5	62.0	58.5	55.0	51.5	45.0	65.0
Low Noise Mode	50/60Hz	56.0	57.0	52.0	48.0	47.5	49.0	47.0	44.0	55.0

When Low Noise Mode is set,the A/C system's capacity is limited. The system could return to normal operation from Low Noise Mode automatically in the case that the operation condition is severe.

Sound level of PUHY-EP750YSHM-A1(-BS)

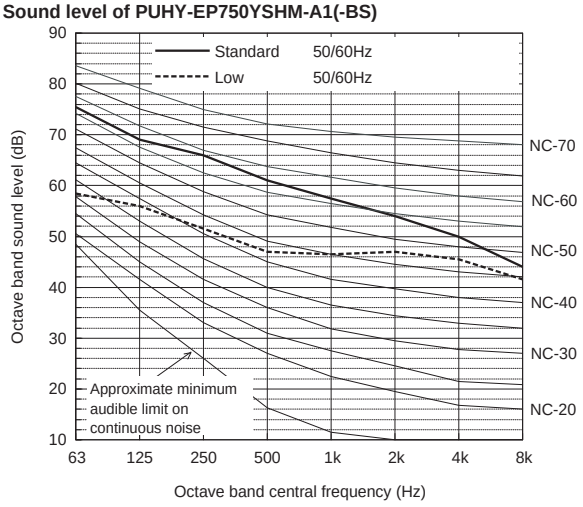

		63	125	250	500	1k	2k	4k	8k	dB(A)
Standard	50/60Hz	75.5	69.0	66.0	61.0	57.5	54.0	50.0	44.0	64.0
Low Noise Mode	50/60Hz	58.5	56.0	51.5	47.0	46.5	47.0	45.5	41.5	53.5

When Low Noise Mode is set,the A/C system's capacity is limited. The system could return to normal operation from Low Noise Mode automatically in the case that the operation condition is severe.

Sound level of PUHY-EP900YSHM-A(-BS)

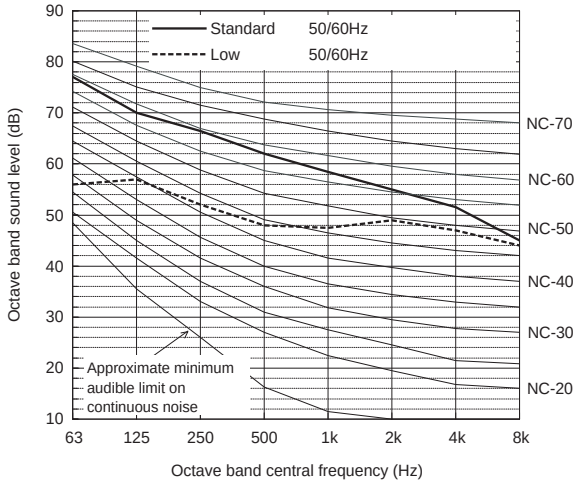

		63	125	250	500	1k	2k	4k	8k	dB(A)
Standard	50/60Hz	77.0	70.0	66.5	62.0	58.5	55.0	51.5	45.0	65.0
Low Noise Mode	50/60Hz	56.0	57.0	52.0	48.0	47.5	49.0	47.0	44.0	55.0

When Low Noise Mode is set,the A/C system's capacity is limited. The system could return to normal operation from Low Noise Mode automatically in the case that the operation condition is severe.

6-1. Correction by temperature

CITY MULTI could have varied capacity at different designing temperature. Using the nominal cooling/heating capacity value and the ratio below, the capacity can be observed at various temperature.

PUHY-		EP200YHM-A	EP250YHM-A
Nominal Cooling Capacity	kW	22.4	28.0
	BTU/h	76,400	95,500
Input	kW	5.18	6.82

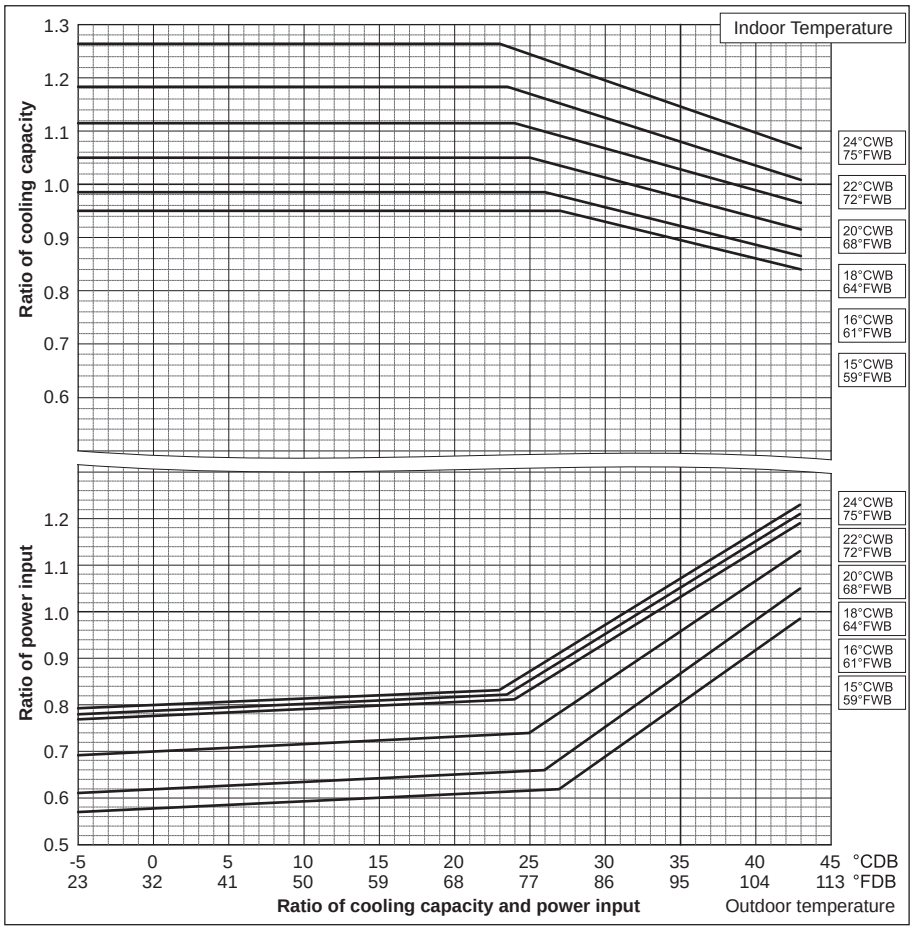

PUHY-		EP200YHM-A	EP250YHM-A
Nominal Heating Capacity	kW	25.0	31.5
	BTU/h	85,300	107,500
Input	kW	5.77	7.59

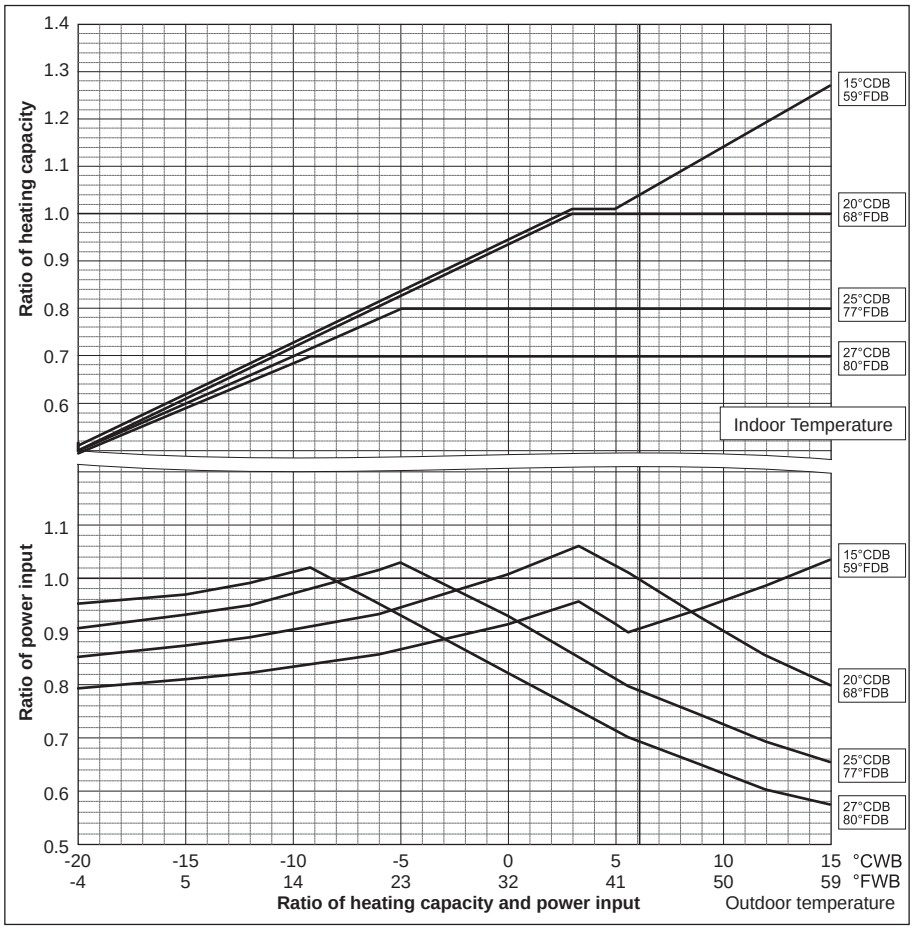

Ref:PUHY_YHM-A_CbTMP_EUDB_EP200-EP250

PUHY-		EP300YHM-A	EP400YSHM-A
Nominal Cooling Capacity	kW	33.5	45.0
	BTU/h	114,300	153,500
Input	kW	8.25	10.41

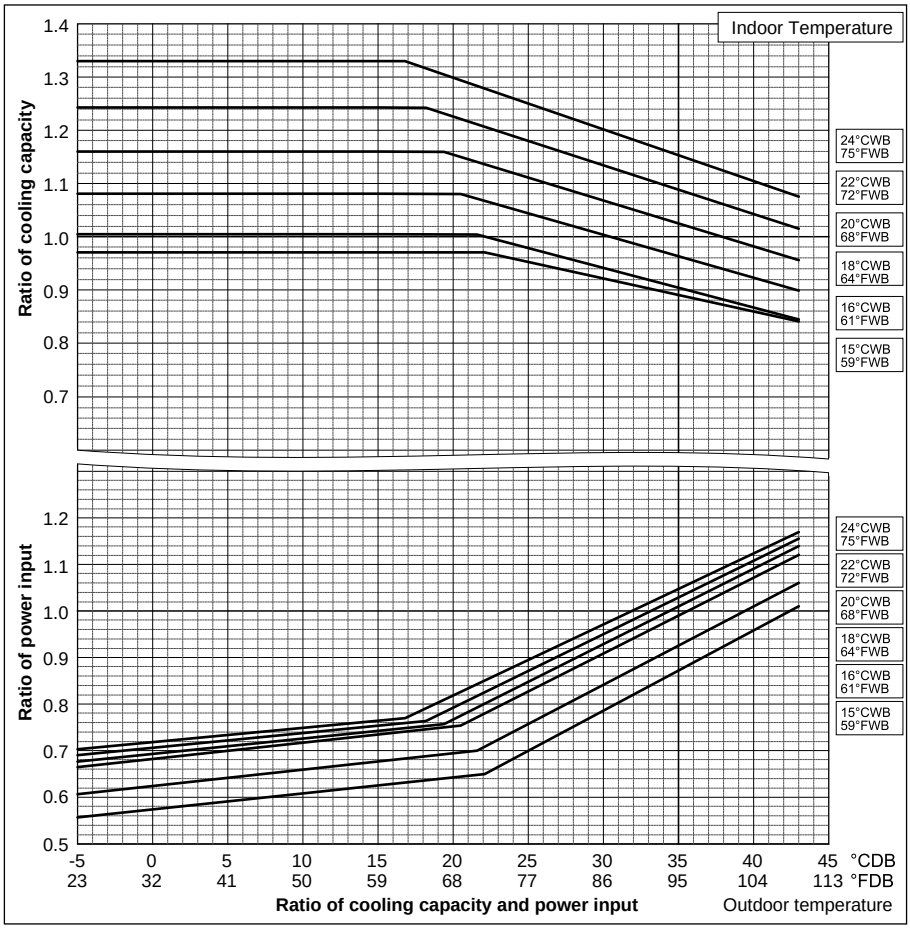

PUHY-		EP300YHM-A	EP400YSHM-A
Nominal Heating Capacity	kW	37.5	50.0
	BTU/h	128,000	170,600
Input	kW	9.28	11.54

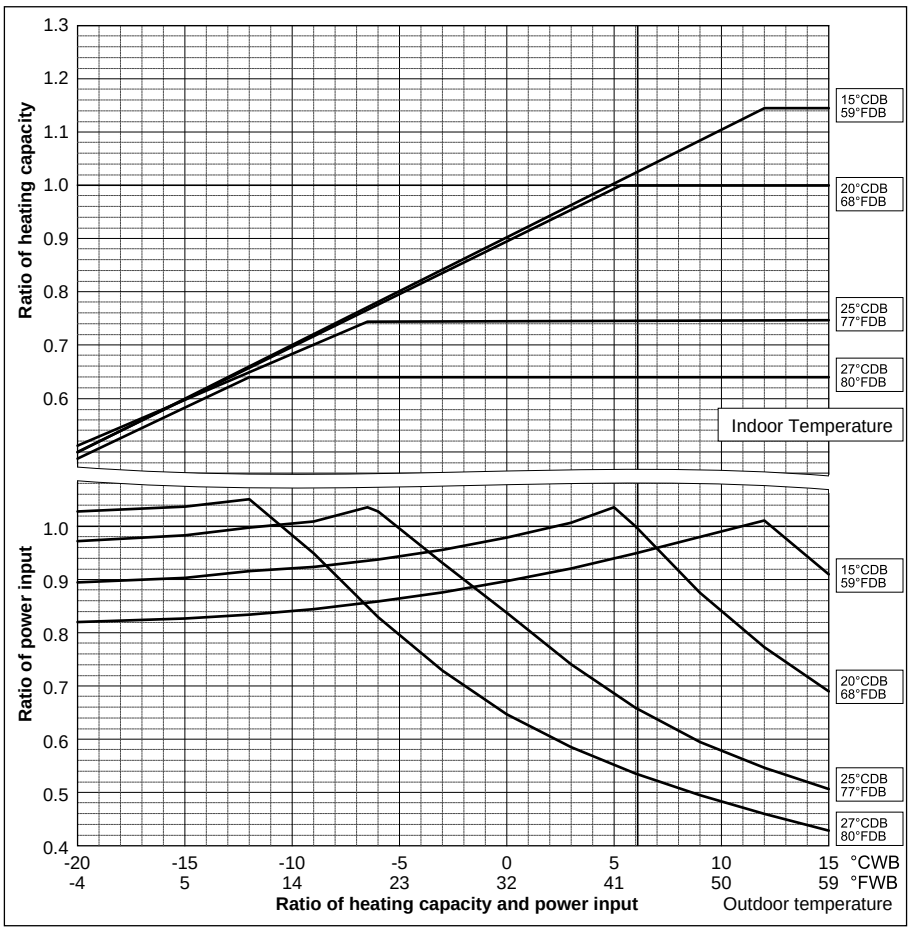

Ref:PUHY_YHM-A_CbTMP_EUDB_EP300-P400

6. CAPACITY TABLES

PUHY-		EP450YSHM-A1	EP500YSHM-A
Nominal Cooling Capacity	kW	50.0	56.0
	BTU/h	170,600	191,100
Input	kW	11.87	13.46

PUHY-		EP550YSHM-A1	EP600YSHM-A
Nominal Cooling Capacity	kW	63.0	69.0
	BTU/h	215,000	235,400
Input	kW	15.44	16.99

PUHY-		EP650YSHM-A
Nominal Cooling Capacity	kW	73.0
	BTU/h	249,100
Input	kW	18.34

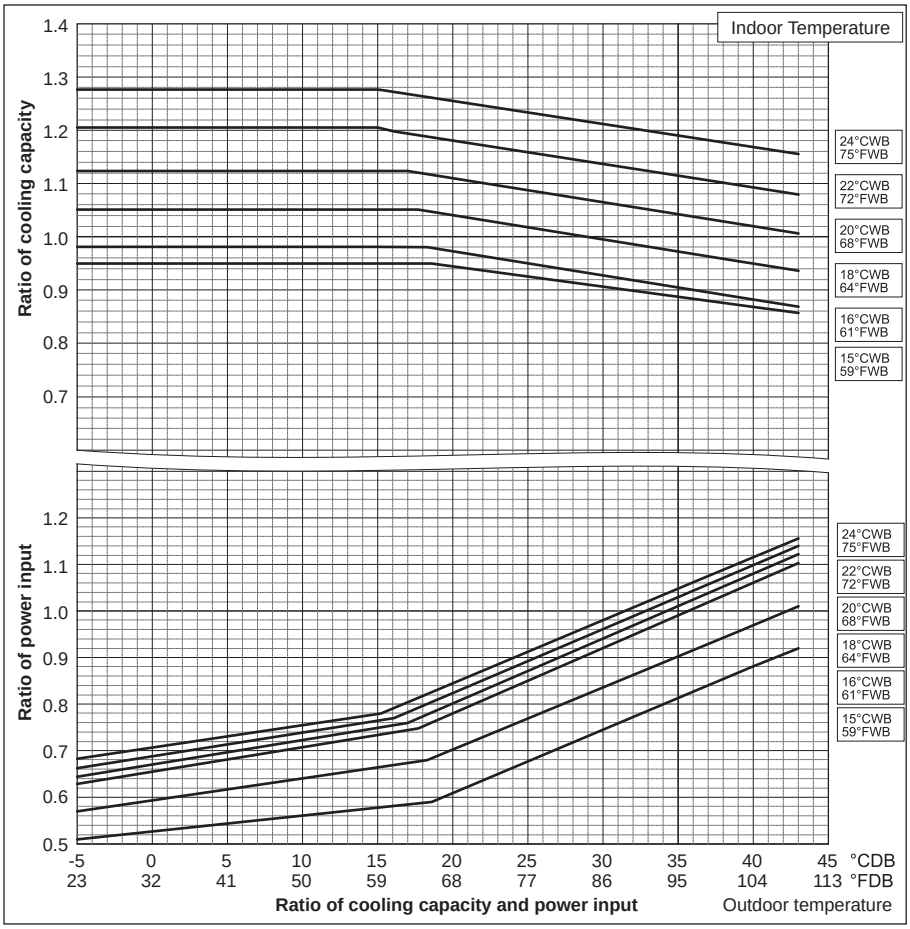

PUHY-		EP450YSHM-A1	EP500YSHM-A
Nominal Heating Capacity	kW	56.0	63.0
	BTU/h	191,100	215,000
Input	kW	13.05	15.14

PUHY-		EP550YSHM-A1	EP600YSHM-A
Nominal Heating Capacity	kW	69.0	76.5
	BTU/h	235,400	261,000
Input	kW	16.82	18.93

PUHY-		EP650YSHM-A
Nominal Heating Capacity	kW	81.5
	BTU/h	278,100
Input	kW	19.13

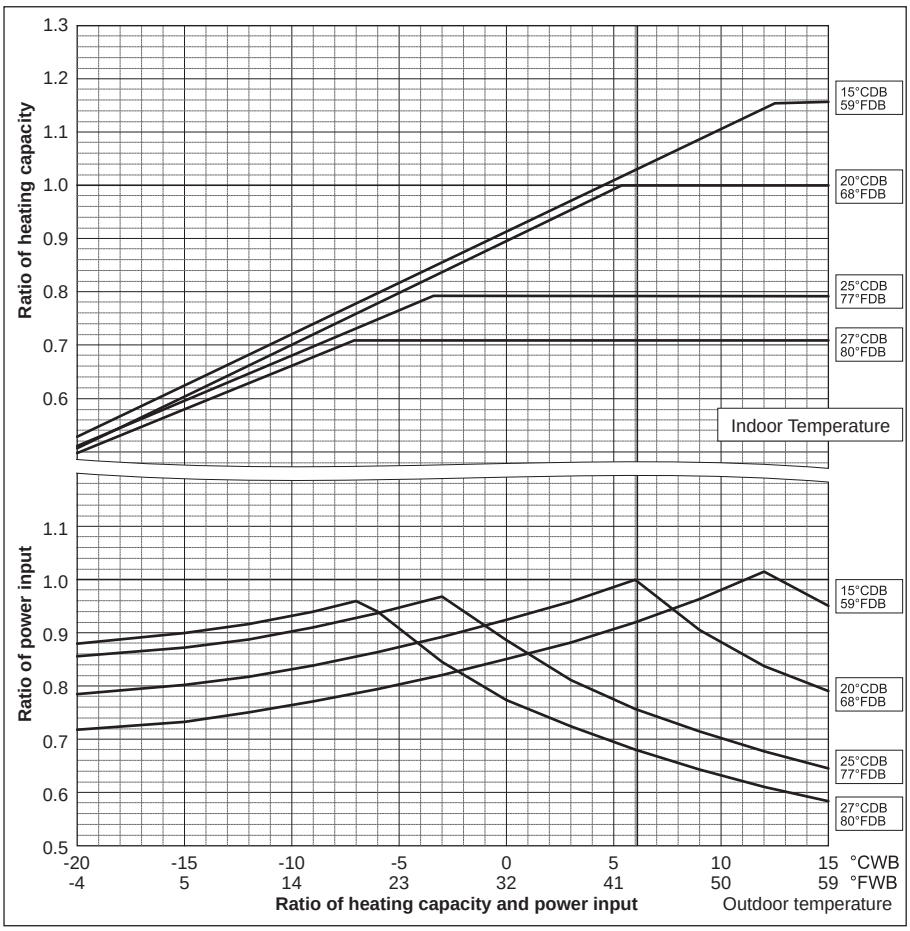

Ref:PUHY_YHM-A_CbTMP_EUDB_EP450-EP650

PUHY-		EP700YSHM-A	EP750YSHM-A1
Nominal Cooling Capacity	kW	80.0	85.0
	BTU/h	273,000	290,000
Input	kW	20.99	20.43

PUHY-		EP800YSHM-A
Nominal Cooling Capacity	kW	90.0
	BTU/h	307,100
Input	kW	22.00

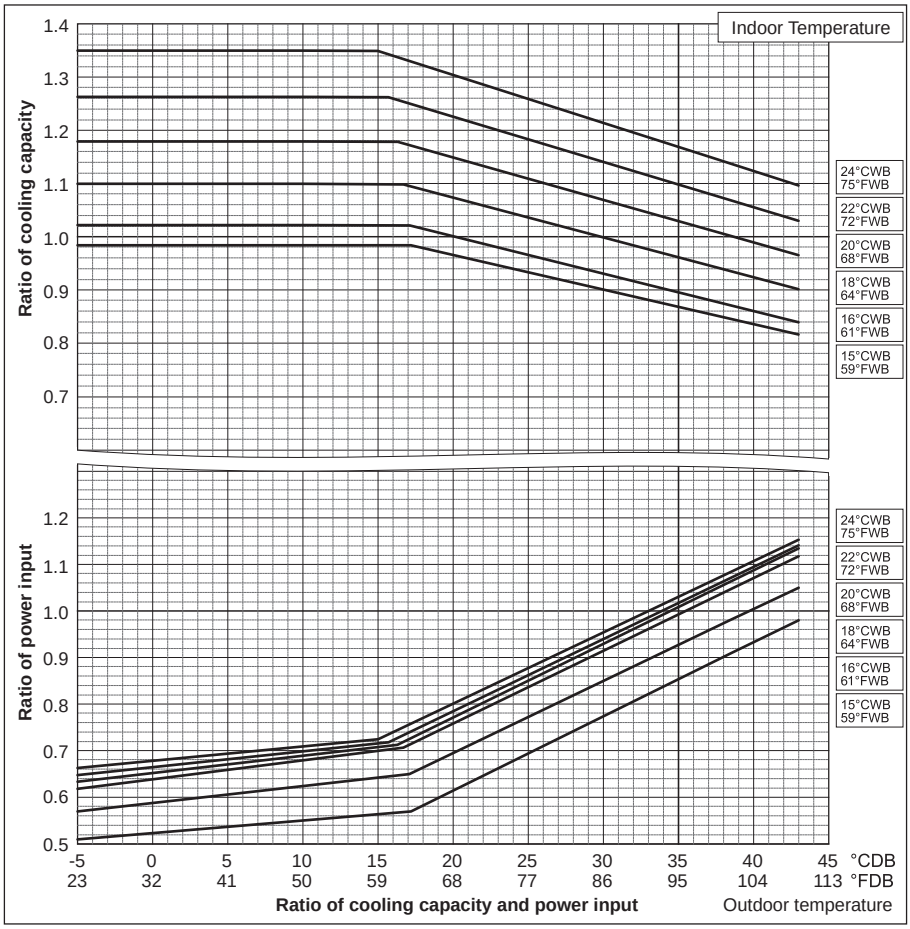

PUHY-		EP700YSHM-A	EP750YSHM-A1
Nominal Heating Capacity	kW	88.0	95.0
	BTU/h	300,300	324,100
Input	kW	20.00	22.19

PUHY-		EP800YSHM-A
Nominal Heating Capacity	kW	100.0
	BTU/h	341,200
Input	kW	23.41

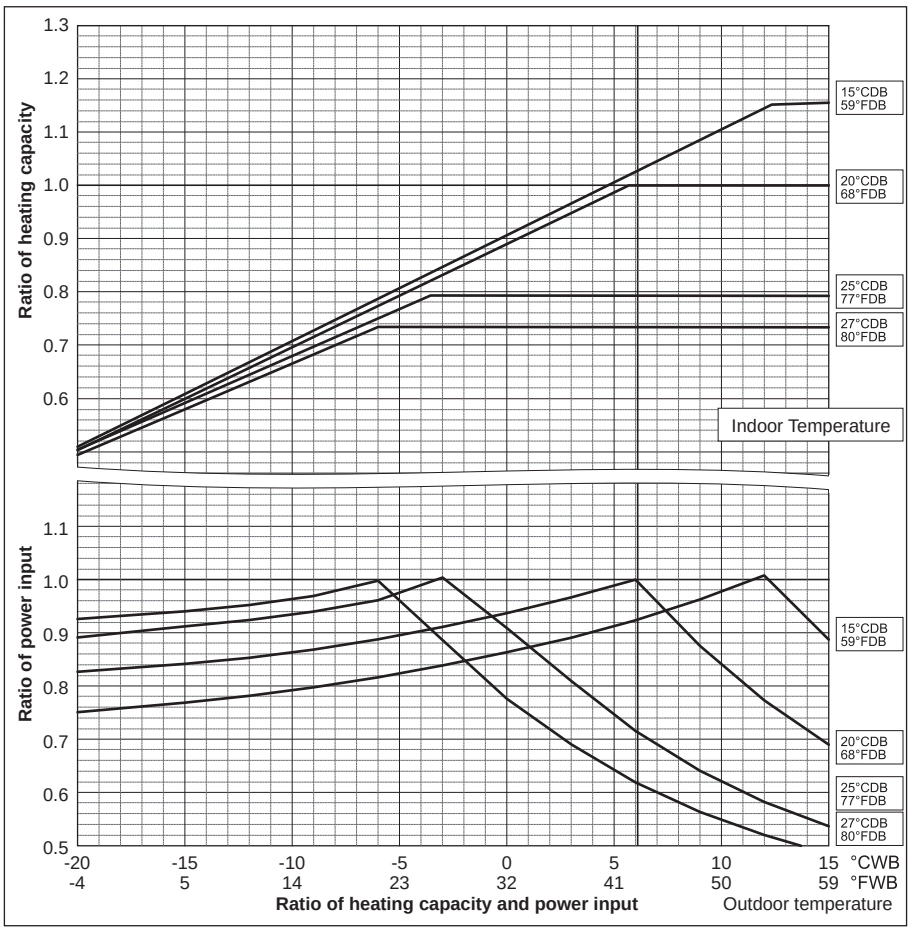

Ref:PUHY_YHM-A_CbTMP_EUDB_EP700-EP800

6. CAPACITY TABLES

PUHY-		EP850YSHM-A1	EP900YSHM-A
Nominal Cooling Capacity	kW	96.0	101.0
	BTU/h	327,600	344,600
Input	kW	23.58	24.87

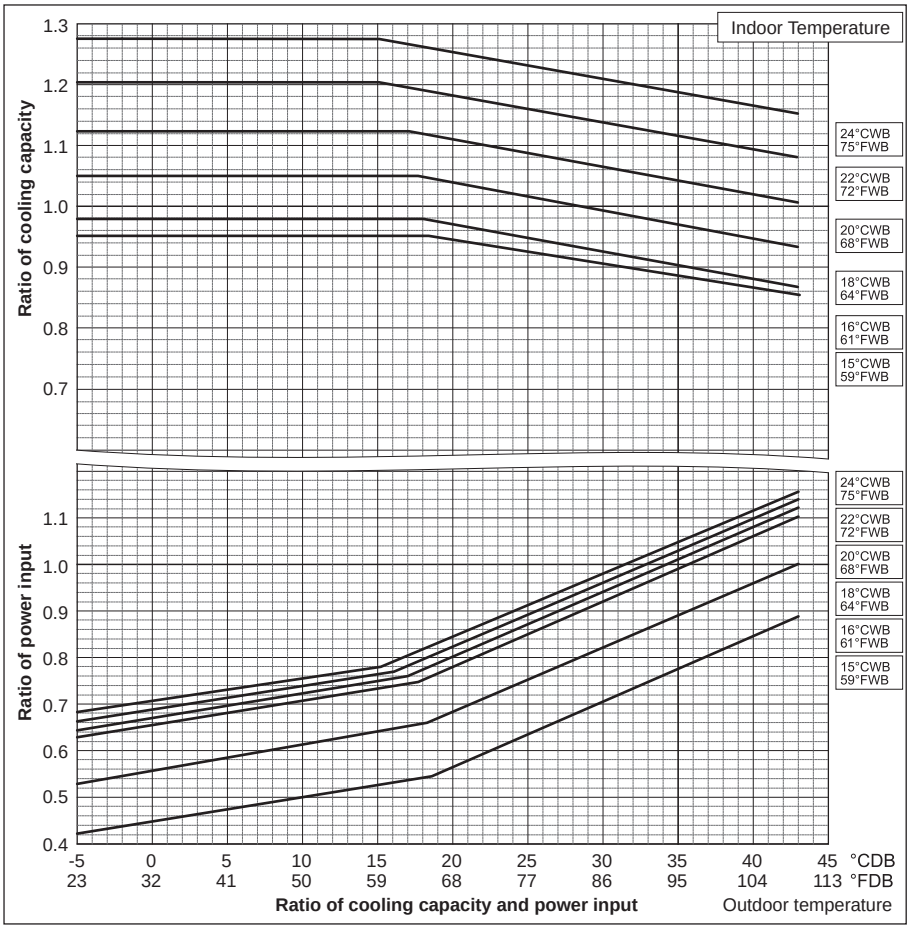

PUHY-		EP850YSHM-A1	EP900YSHM-A
Nominal Heating Capacity	kW	108.0	113.0
	BTU/h	368,500	385,600
Input	kW	25.59	27.90

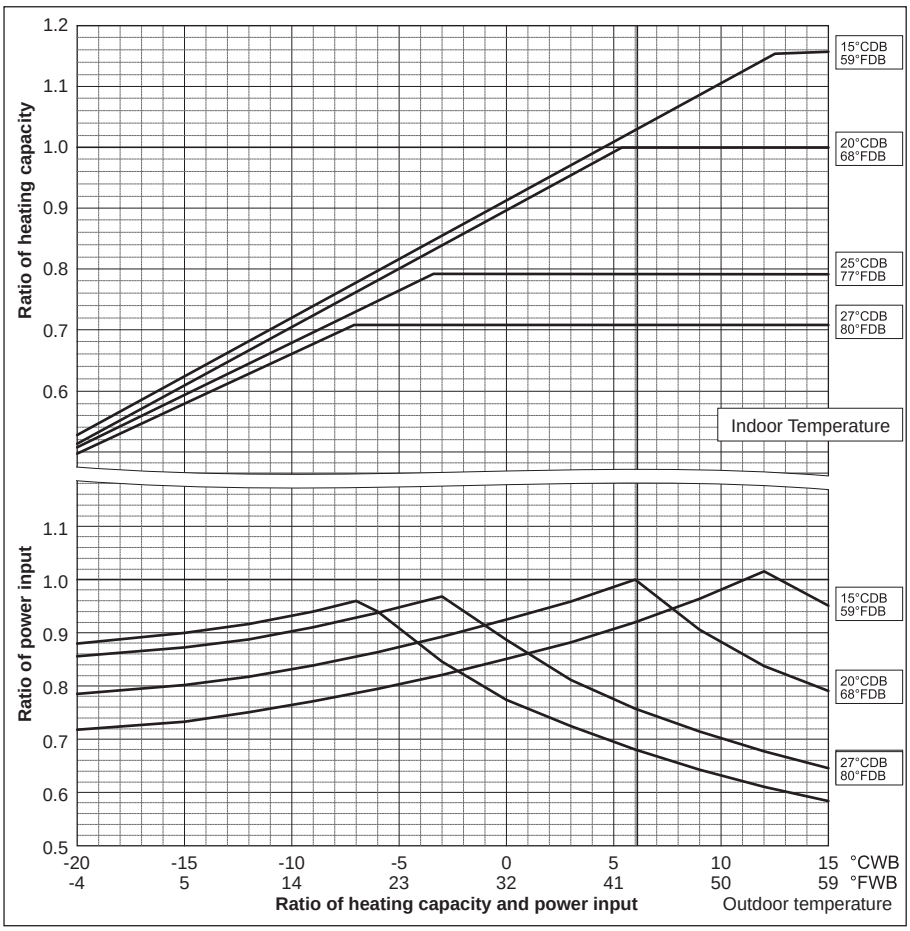

Ref:PUHY_YHM-A_CbTMP_EUDB_EP850-EP900

Y(HIGH COP)

6-2. Correction by total indoor

CITY MULTI system has different capacity and input at different total capacity of indoor unit connected. Using following tables, the maximum capacity can be observed so as to ensure the system having enough capacity.

PUHY-EP200,250YHM-A

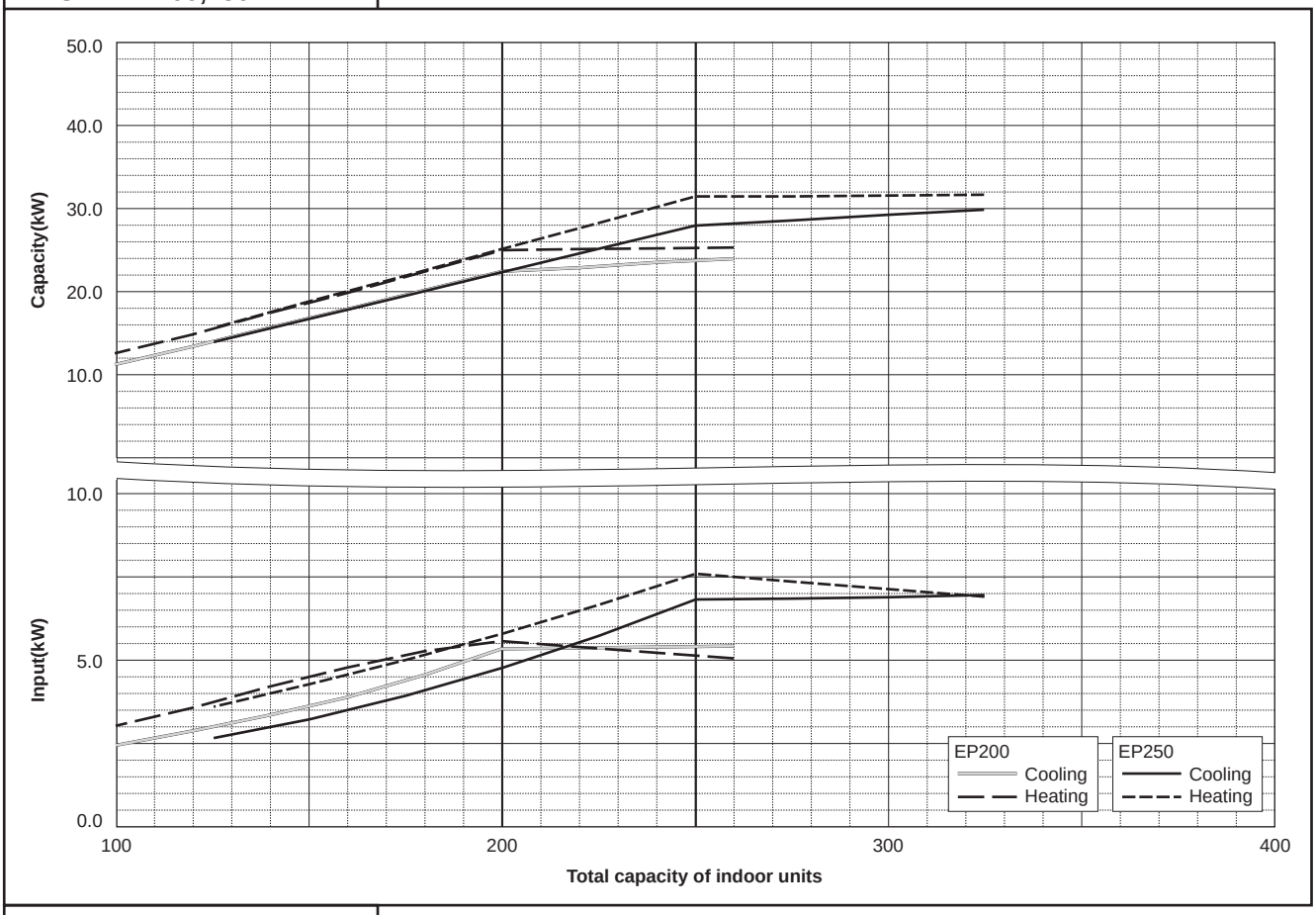

PUHY-EP300YHM-A

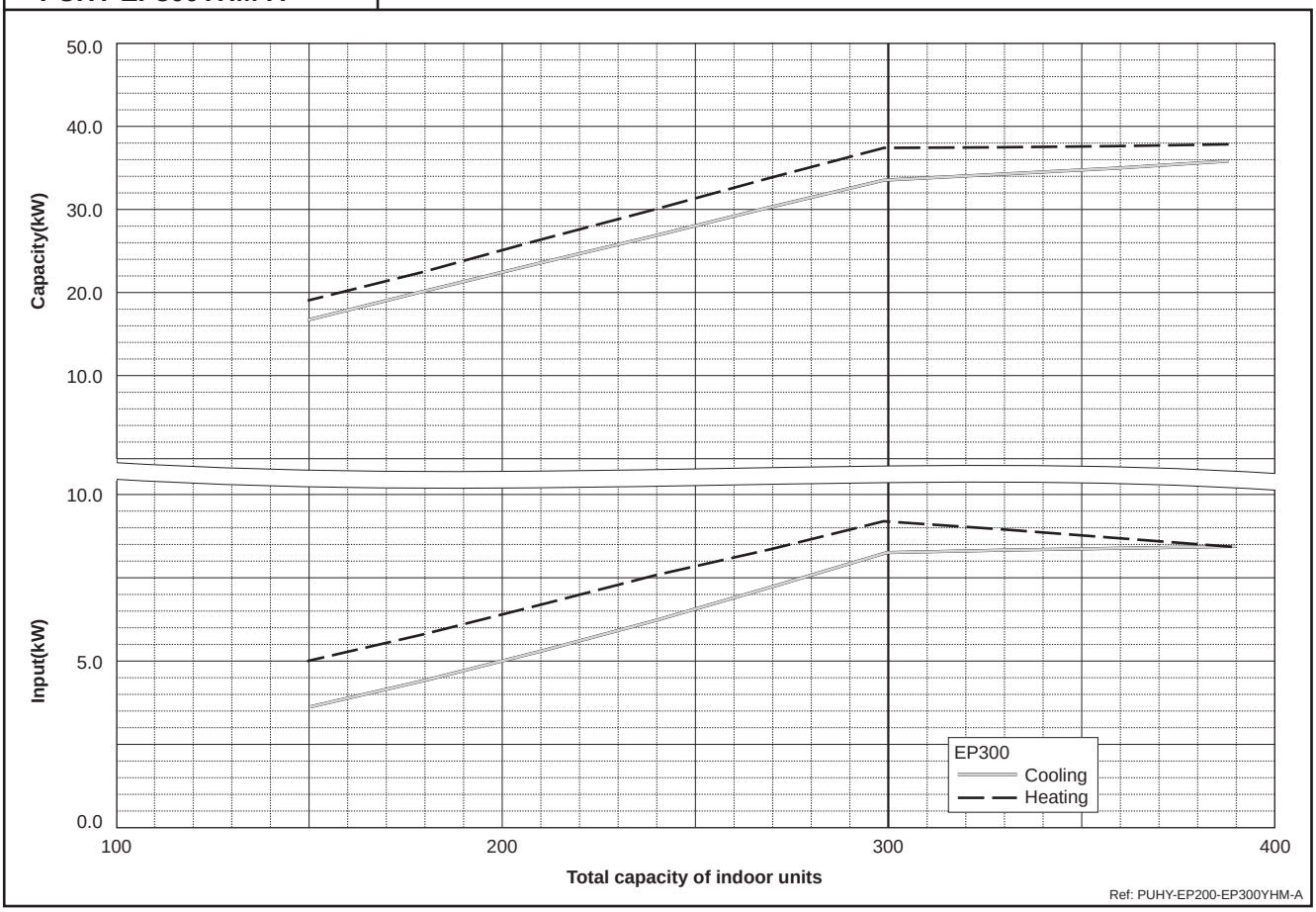

PUHY-EP400,450YSHM-A(1)

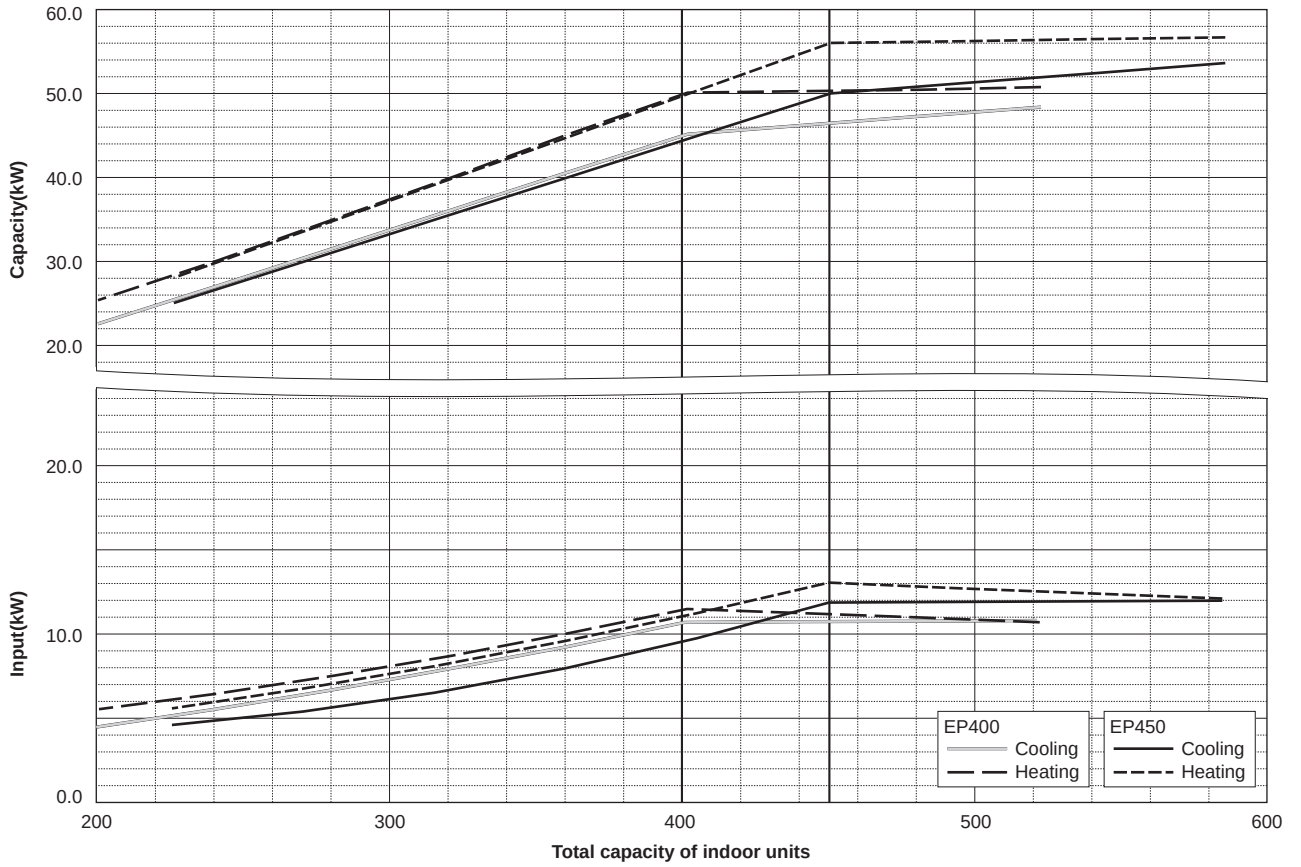

PUHY-EP500,550YSHM-A(1)

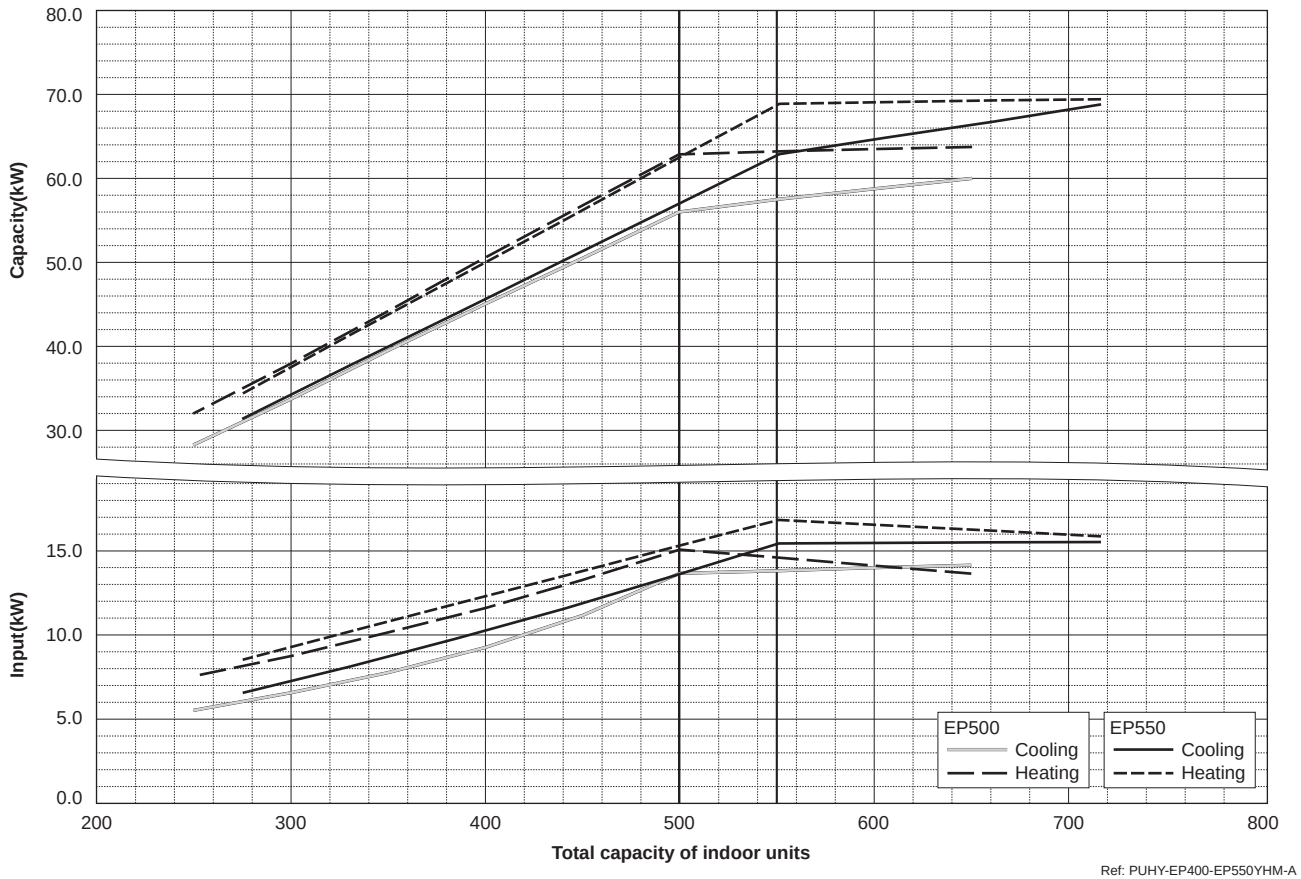

Ref: PUHY-EP400-EP550YHM-A

PUHY-EP600,650YSHM-A

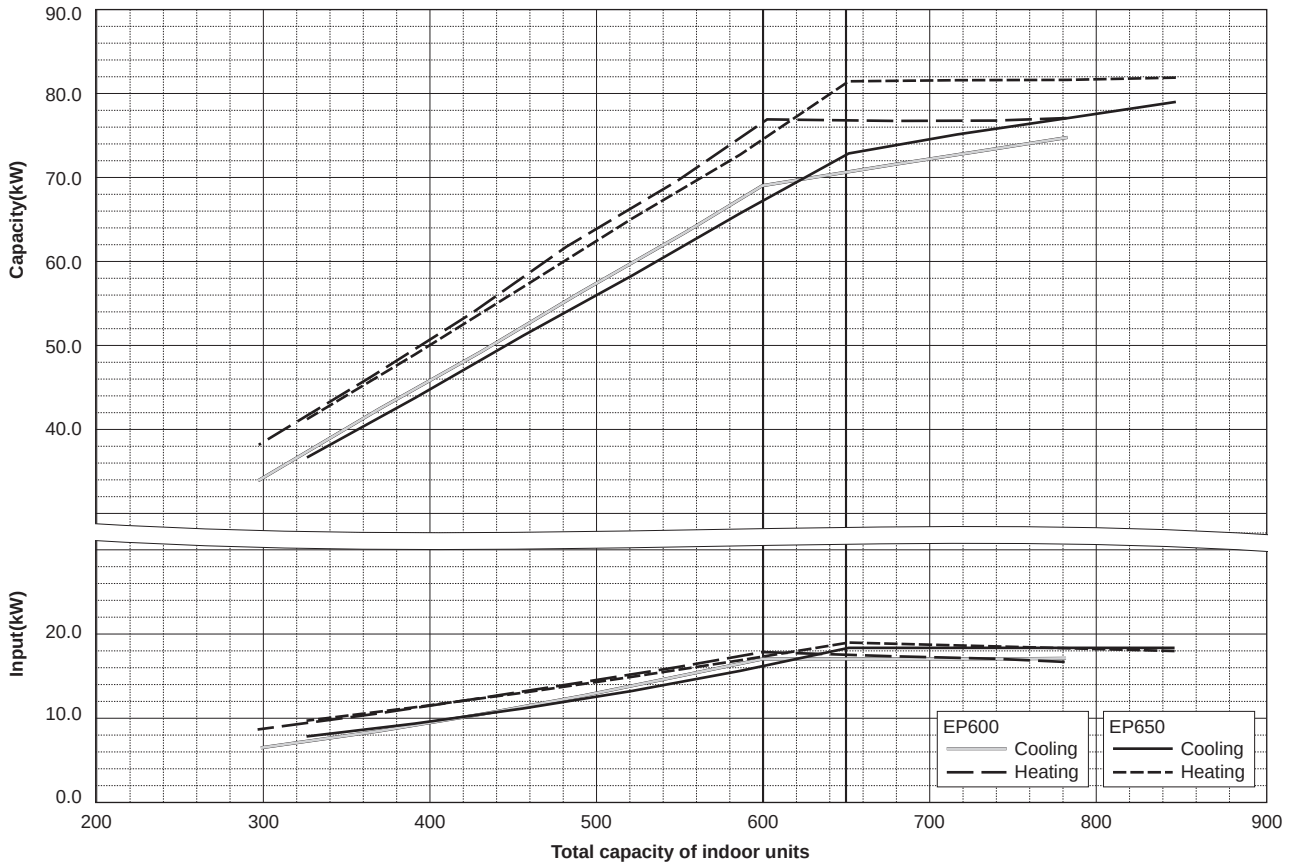

PUHY-EP700,750YSHM-A(1)

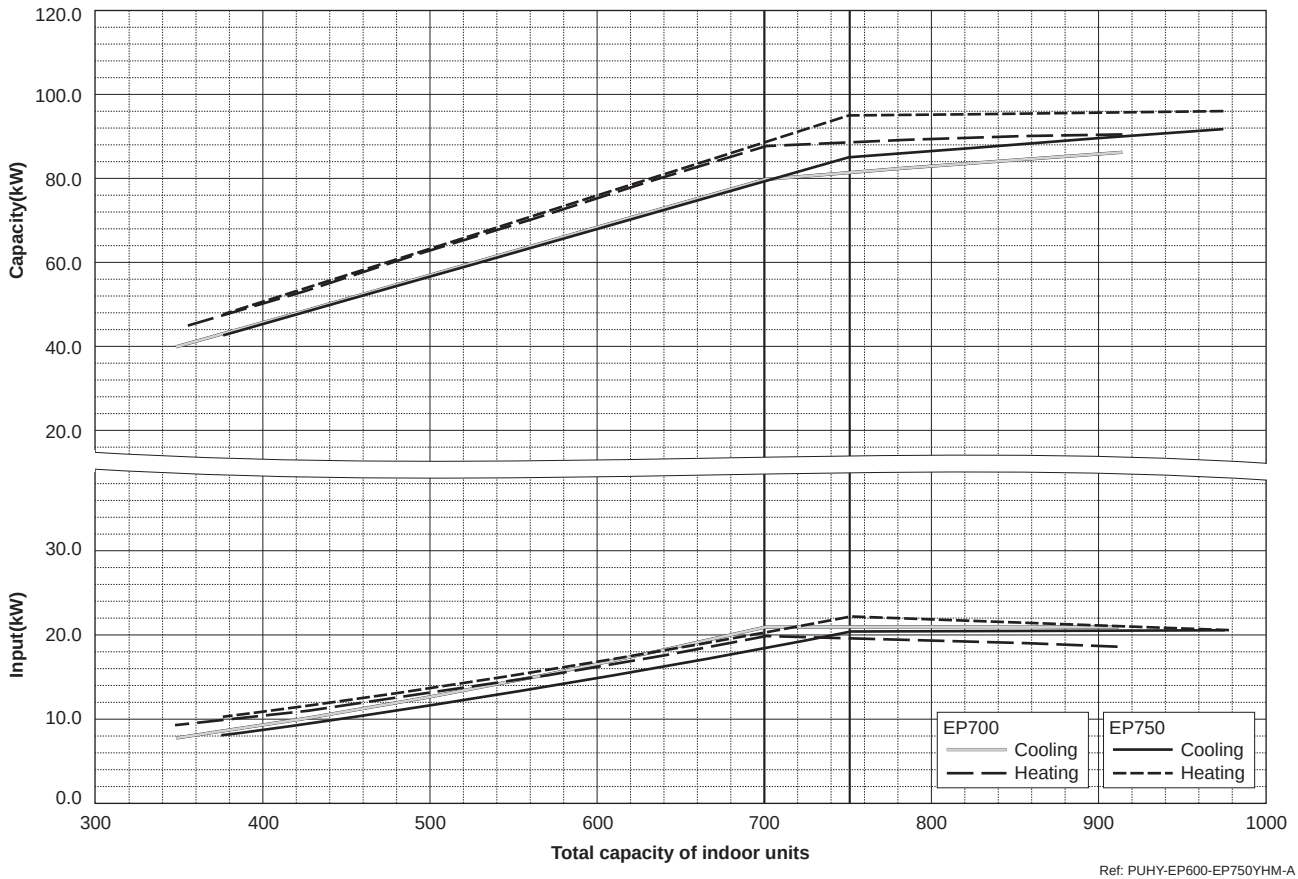

Ref: PUHY-EP600-EP750YHM-A

PUHY-EP800,850YSHM-A(1)

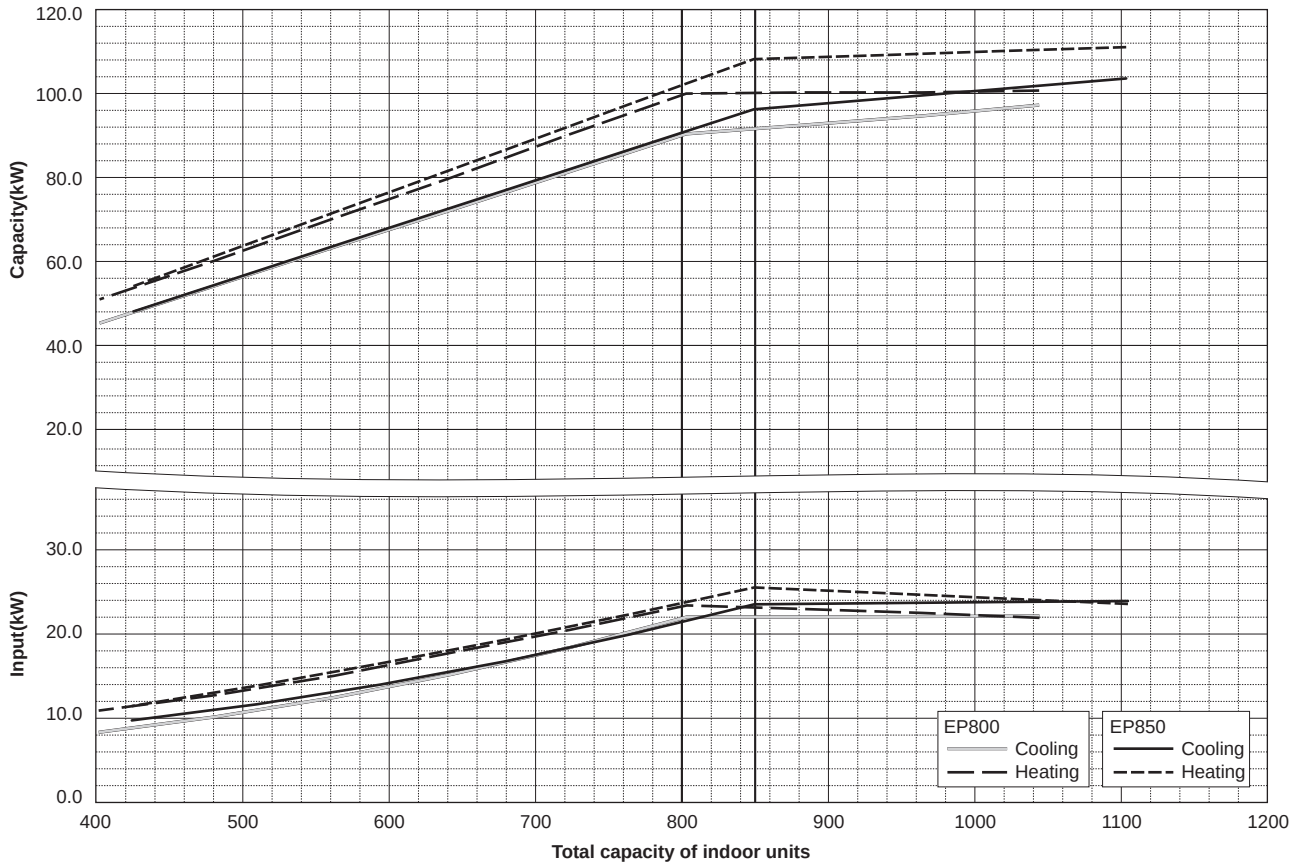

PUHY-EP900YSHM-A

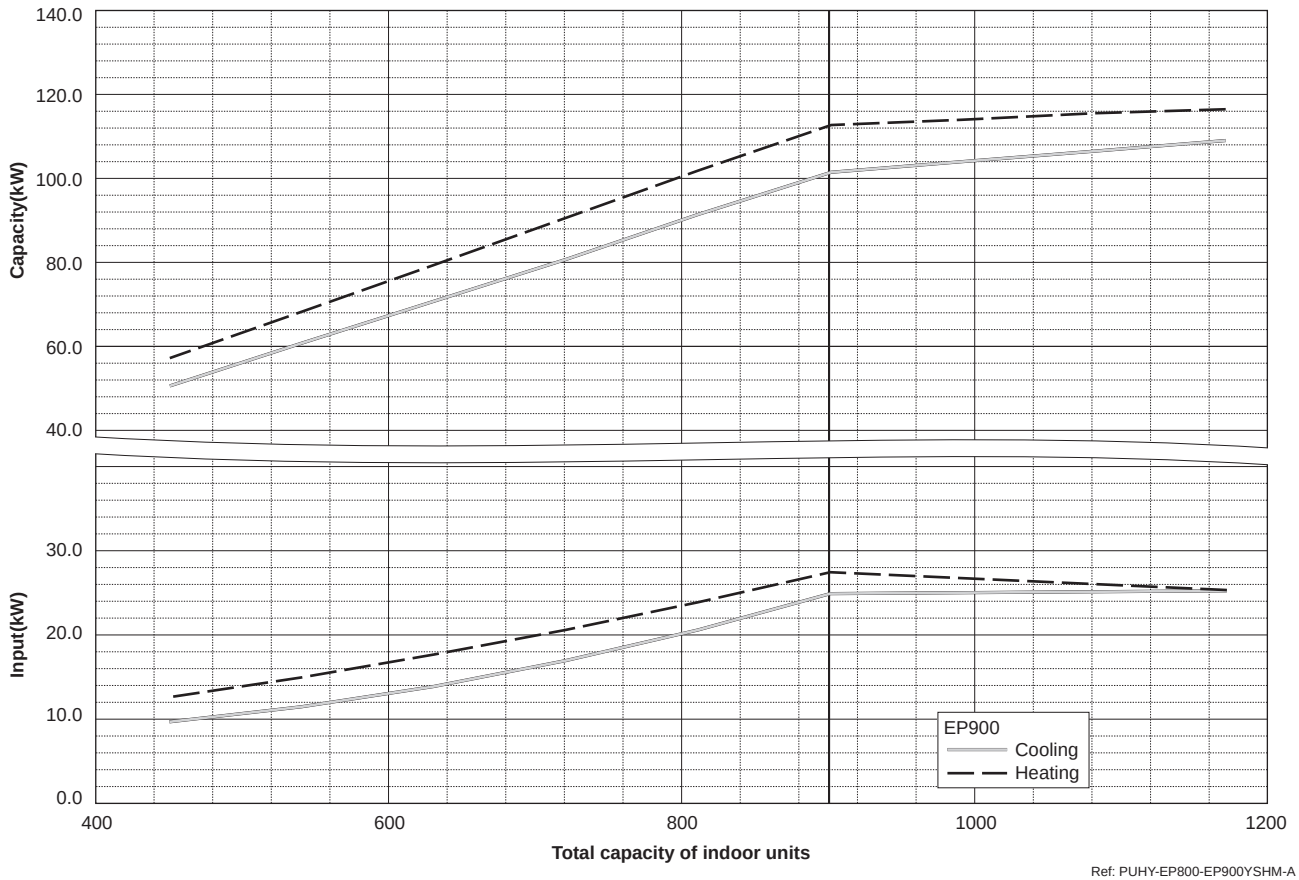

Ref: PUHY-EP800-EP900YSHM-A

6-3. Correction by refrigerant piping length

CITY MULTI system can extend the piping flexibly within its limitation for the actual situation. Yet, a decrease of cooling/heating capacity could happen correspondently. Using following correction factor according to the equivalent length of the piping shown at 6-3-1 and 6-3-2, the capacity can be observed. 6-3-3 shows how to obtain the equivalent length of piping.

6-3-1. Cooling capacity correction

PUHY-(E)P200YHM-A

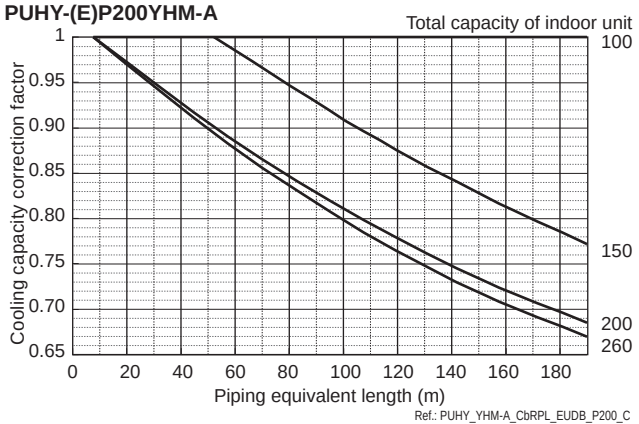

Ref.: PUHY_YHM-A_CbRPL_EUDB_P200_C

PUHY-(E)P450Y(S)HM-A(1)

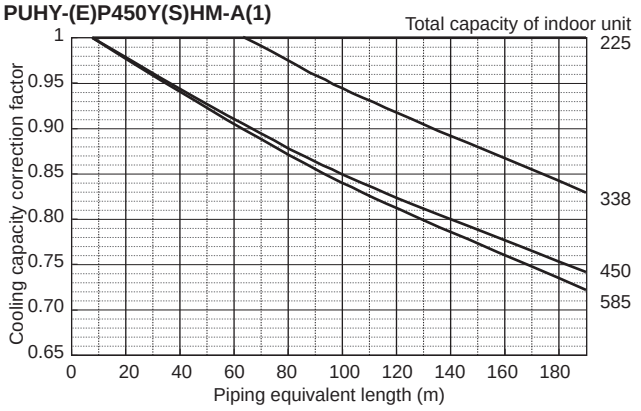

Ref.: PUHY_YHM-A_CbRPL_EUDB_P450_C

PUHY-(E)P250YHM-A

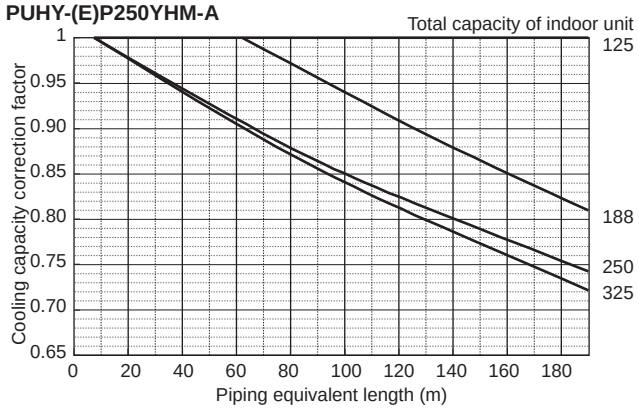

Ref.: PUHY_YHM-A_CbRPL_EUDB_P250_C

PUHY-(E)P500YSHM-A

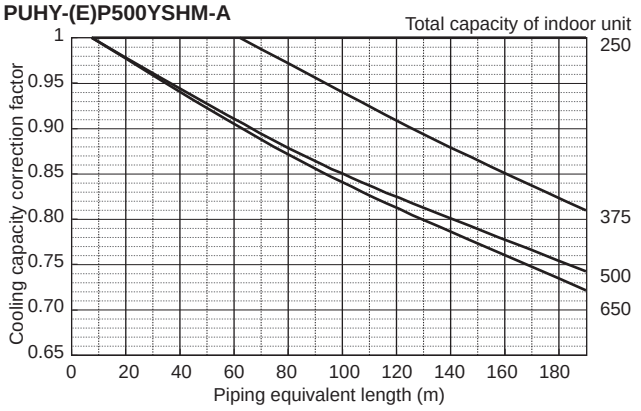

Ref.: PUHY_YHM-A_CbRPL_EUDB_P500_C

PUHY-(E)P300YHM-A

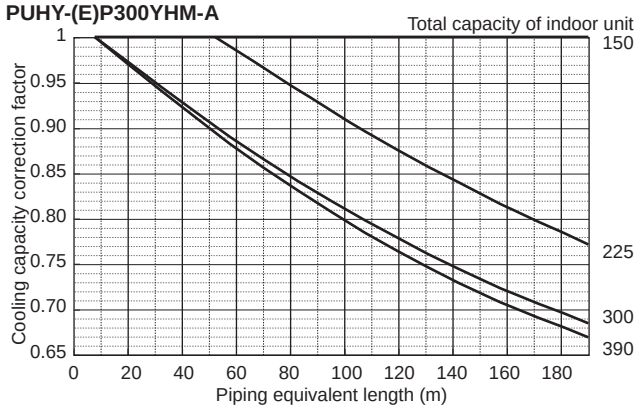

Ref.: PUHY_YHM-A_CbRPL_EUDB_P300_C

PUHY-(E)P550YSHM-A(1)

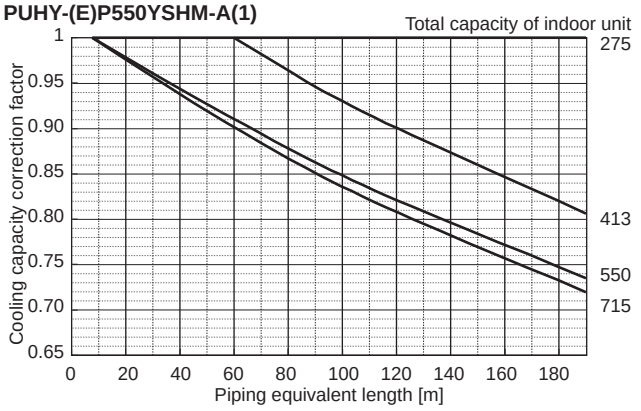

Ref.: PUHY_YHM-A_CbRPL_EUDB_P550_C

PUHY-(E)P400Y(S)HM-A

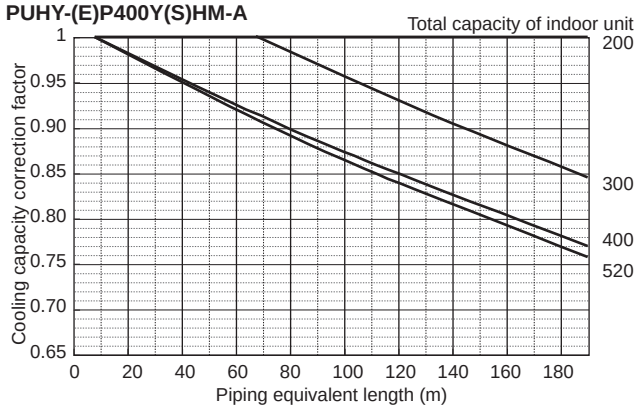

Ref.: PUHY_YHM-A_CbRPL_EUDB_P400_C

PUHY-(E)P600YSHM-A

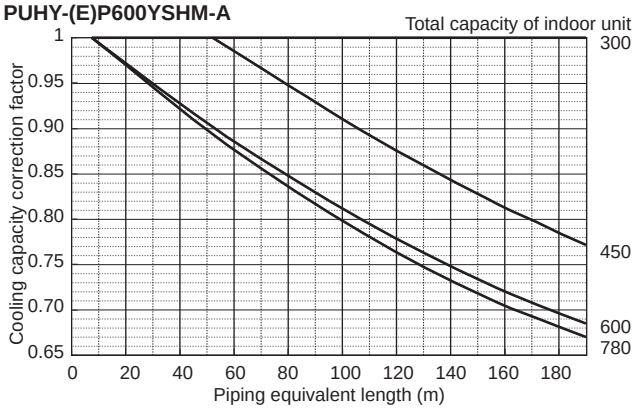

Ref.: PUHY_YHM-A_CbRPL_EUDB_P600_C

PUHY-(E)P650YSHM-A

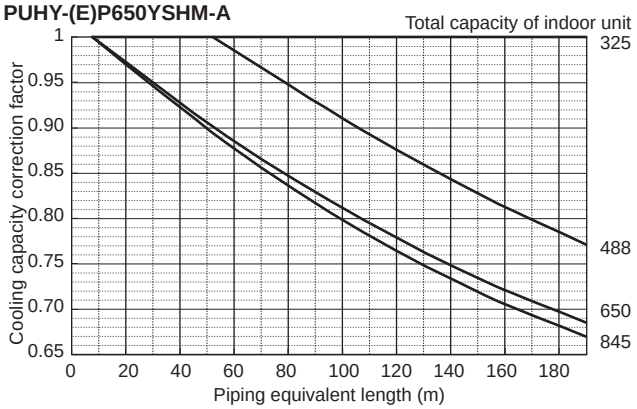

Ref.: PUHY_YHM-A_CbRPL_EUDB_P650_C

PUHY-(E)P800YSHM-A

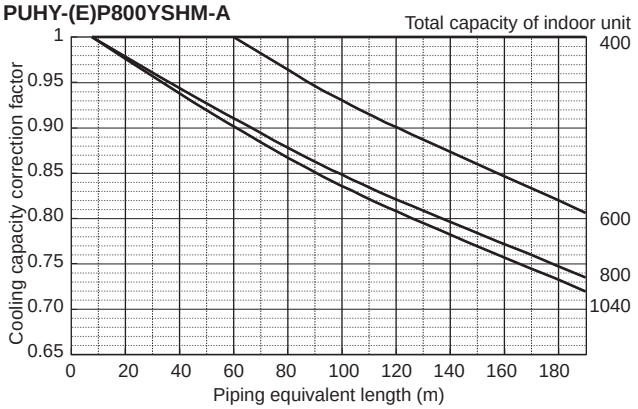

Ref.: PUHY_YHM-A_CbRPL_EUDB_P800_C

PUHY-(E)P700YSHM-A

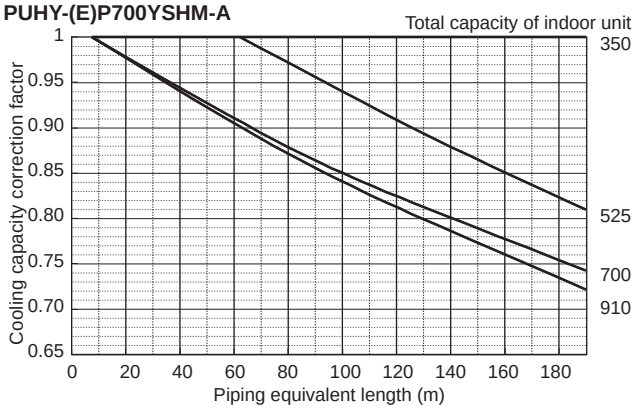

Ref.: PUHY_YHM-A_CbRPL_EUDB_P700_C

PUHY-(E)P850YSHM-A(1)

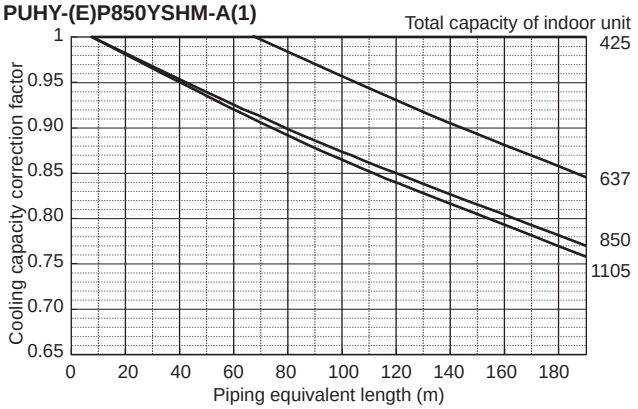

Ref.: PUHY_YHM-A_CbRPL_EUDB_P850_C

PUHY-(E)P750YSHM-A(1)

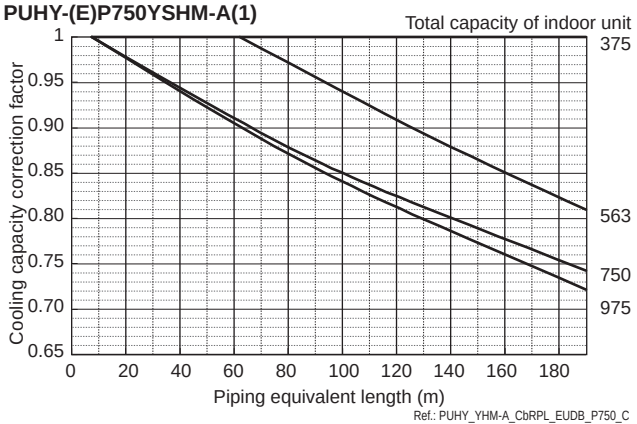

Ref.: PUHY_YHM-A_CbRPL_EUDB_P750_C

PUHY-(E)P900YSHM-A

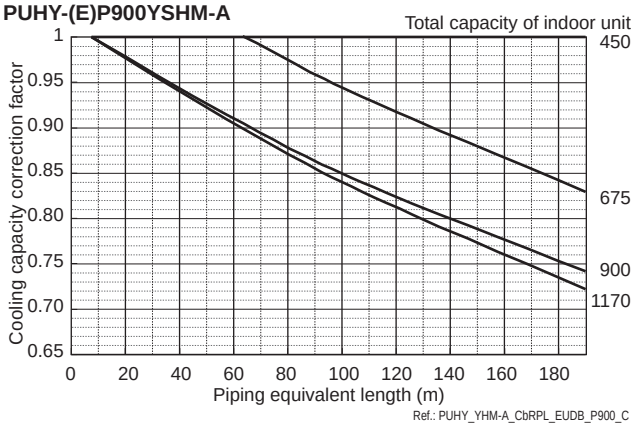

Ref.: PUHY_YHM-A_CbRPL_EUDB_P900_C

6-3-2. Heating capacity correction

PUHY-(E)P200,250YHM-A

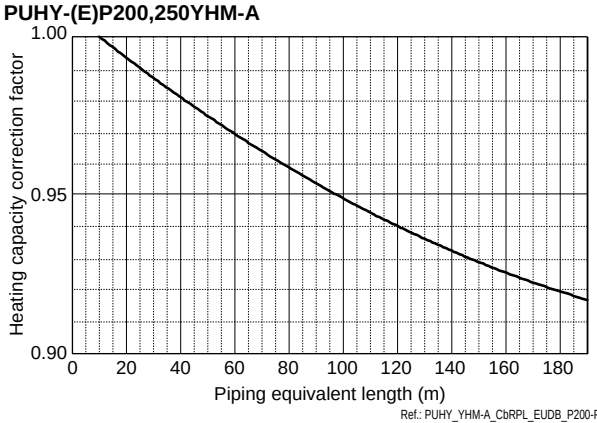

Ref.: PUHY_YHM-A_CbRPL_EUDB_P200-P250_H

PUHY-(E)P700,750,800YSHM-A(1)

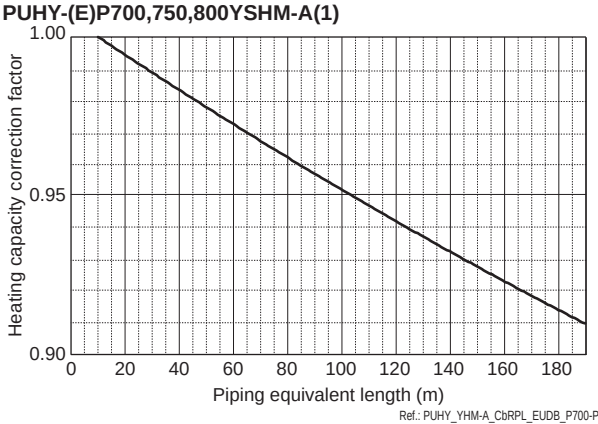

Ref.: PUHY_YHM-A_CbRPL_EUDB_P700-P800_H

PUHY-(E)P300,350,400,450Y(S)HM-A(1)

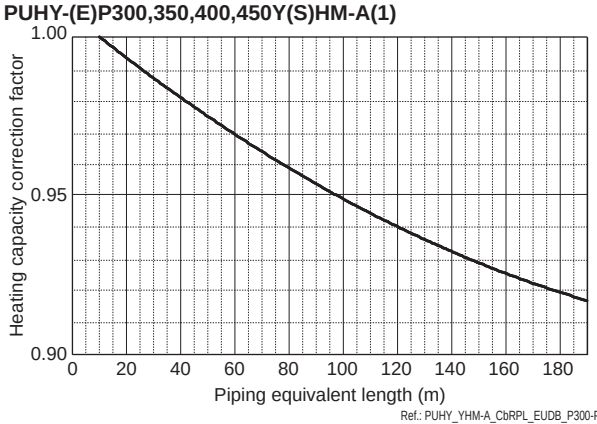

Ref.: PUHY_YHM-A_CbRPL_EUDB_P300-P450_H

PUHY-(E)P850,900,950,1000YSHM-A(1)

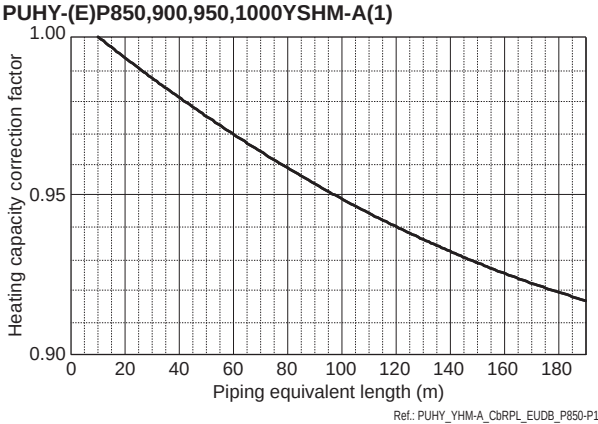

Ref.: PUHY_YHM-A_CbRPL_EUDB_P850-P1000_H

PUHY-(E)P500,550,600,650YSHM-A(1)

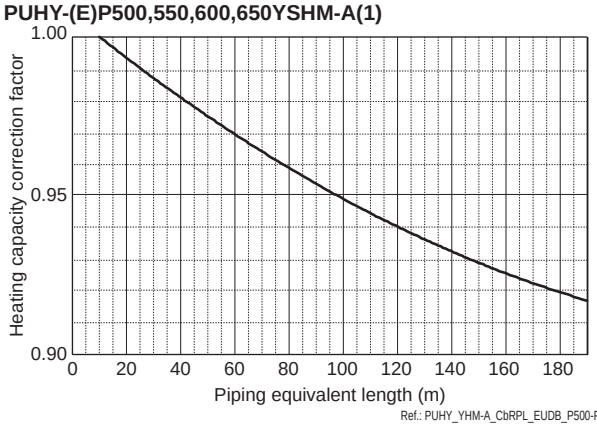

Ref.: PUHY_YHM-A_CbRPL_EUDB_P500-P650_H

6-3-3. How to obtain the equivalent piping length

1 **PUHY-(E)P200YHM**
Equivalent length = (Actual piping length to the farthest indoor unit) + (0.35 x number of bends in the piping) m

2 **PUHY-(E)P250,300YHM**
Equivalent length = (Actual piping length to the farthest indoor unit) + (0.42 x number of bends in the piping) m

3 **PUHY-P350YHM**
Equivalent length = (Actual piping length to the farthest indoor unit) + (0.47 x number of bends in the piping) m

4 **PUHY-(E)P400,450,500,550,600,650Y(S)HM**
Equivalent length = (Actual piping length to the farthest indoor unit) + (0.50 x number of bends in the piping) m

5 **PUHY-(E)P700,750,800YSHM**
Equivalent length = (Actual piping length to the farthest indoor unit) + (0.70 x number of bends in the piping) m

6 **PUHY-(E)P850,900,950,1000,1050,1100,1150,1200,1250YSHM**
Equivalent length = (Actual piping length to the farthest indoor unit) + (0.80 x number of bends in the piping) m

Ref: PUHY_YHM-A_EqPLTH_EUDB_ALL

6-4. Correction at frost and defrost

Due to frost at the outdoor heat exchanger and the automatic defrost operation, the heating capacity of the outdoor unit can be calculated by multiplying the correction factor shown in the table below.

Table of correction factor at frost and defrost

Outdoor inlet air temp. °C	6	4	2	1	0	-2	-4	-6	-8	-10	-20
Outdoor inlet air temp. °F	43	39	36	34	32	28	25	21	18	14	-4
PUHY-(E)P200YHM	1.00	0.95	0.84	0.83	0.83	0.87	0.90	0.95	0.95	0.95	0.95
PUHY-(E)P250YHM	1.00	0.95	0.84	0.83	0.83	0.87	0.90	0.95	0.95	0.95	0.95
PUHY-(E)P300YHM	1.00	0.93	0.82	0.80	0.82	0.86	0.90	0.90	0.95	0.95	0.95
PUHY-P350YHM	1.00	0.93	0.85	0.83	0.84	0.86	0.90	0.90	0.95	0.95	0.95
PUHY-(E)P400YHM	1.00	0.95	0.90	0.87	0.88	0.89	0.90	0.95	0.95	0.95	0.95
PUHY-(E)P450YHM	1.00	0.98	0.89	0.87	0.89	0.90	0.92	0.95	0.95	0.95	0.95
PUHY-(E)P500YSHM	1.00	0.98	0.89	0.86	0.89	0.90	0.92	0.95	0.95	0.95	0.95
PUHY-(E)P550YSHM	1.00	0.94	0.87	0.86	0.87	0.88	0.90	0.90	0.93	0.93	0.93
PUHY-(E)P600YSHM	1.00	0.94	0.84	0.86	0.87	0.88	0.90	0.90	0.93	0.93	0.93
PUHY-(E)P650YSHM	1.00	0.94	0.84	0.86	0.87	0.88	0.90	0.90	0.93	0.93	0.93
PUHY-(E)P700YSHM	1.00	0.98	0.89	0.88	0.89	0.90	0.92	0.95	0.95	0.95	0.95
PUHY-(E)P750YSHM	1.00	0.98	0.89	0.88	0.89	0.90	0.92	0.95	0.95	0.95	0.95
PUHY-(E)P800YSHM	1.00	0.98	0.89	0.88	0.89	0.90	0.92	0.95	0.95	0.95	0.95
PUHY-(E)P850YSHM	1.00	0.94	0.87	0.86	0.87	0.88	0.90	0.90	0.93	0.93	0.93
PUHY-(E)P900YSHM	1.00	0.94	0.87	0.86	0.87	0.88	0.90	0.90	0.93	0.93	0.93
PUHY-P950YSHM	1.00	0.94	0.87	0.86	0.87	0.88	0.90	0.90	0.93	0.93	0.93
PUHY-P1000YSHM	1.00	0.94	0.87	0.86	0.87	0.88	0.90	0.90	0.93	0.93	0.93
PUHY-P1050YSHM	1.00	0.94	0.87	0.86	0.87	0.88	0.90	0.90	0.93	0.93	0.93
PUHY-P1100YSHM	1.00	0.94	0.87	0.86	0.87	0.88	0.90	0.90	0.93	0.93	0.93
PUHY-P1150YSHM	1.00	0.94	0.87	0.86	0.87	0.88	0.90	0.90	0.93	0.93	0.93
PUHY-P1200YSHM	1.00	0.94	0.87	0.86	0.87	0.88	0.90	0.90	0.93	0.93	0.93
PUHY-P1250YSHM	1.00	0.94	0.87	0.86	0.87	0.88	0.90	0.90	0.93	0.93	0.93

Ref: PUHY_YHM-A_CbFROST_EUDB_ALL

6-5. Operation temperature range

• **Cooling**

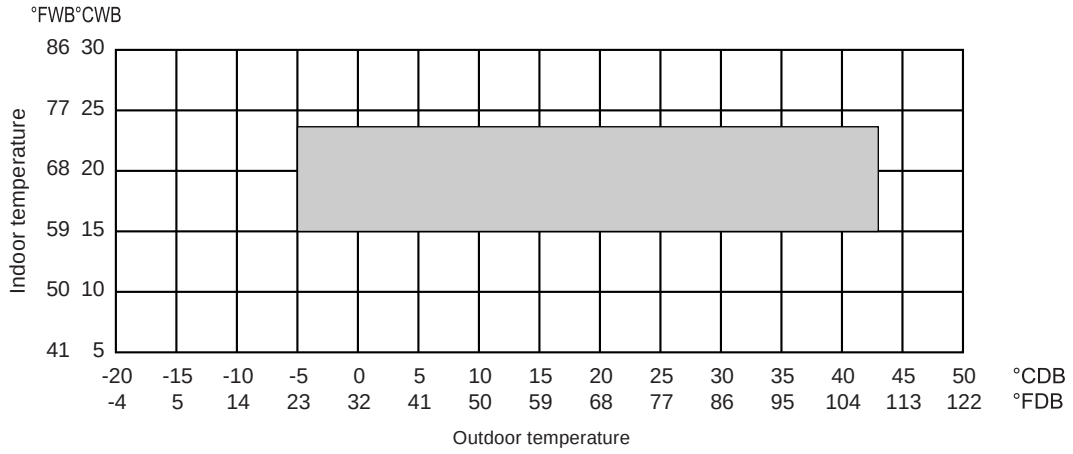

• **Heating**

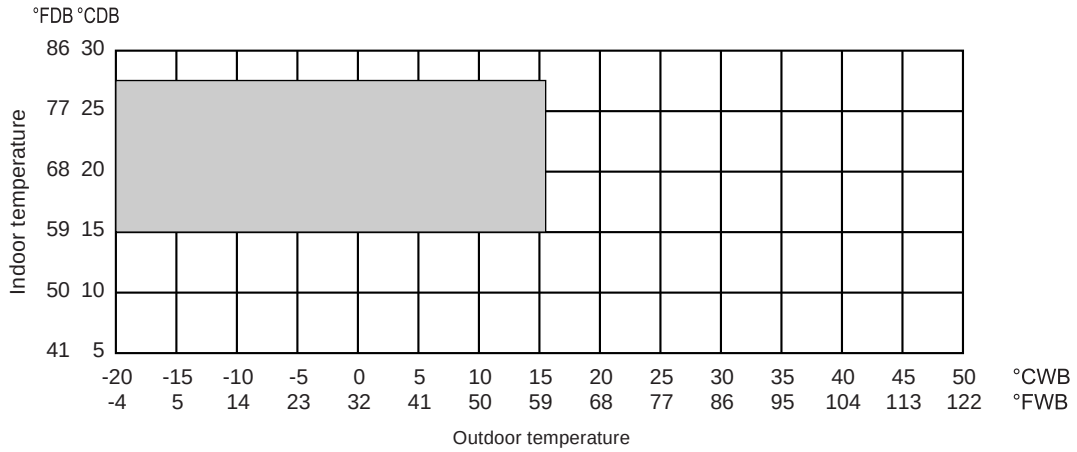

Ref.: PUHY_YHM-A_TMPRNG_EUDB_ALL

7. OPTIONAL PARTS

7-1. JOINT

Piping for CITY MULTI can be easily done with Joints and headers provided by MITSUBISHI ELECTRIC CORP..
There are 4 sets of Joints selectable for piping. Details for applying the Joint sets are referable to System Design 3, or their own Installation Manual.

CMY-Y102S-G2

Ref.: CMY_Y102S_G2_EXD_EUDB_SI
mm

For Gas pipe:

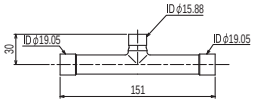

<Deformed pipe(Accessory)>

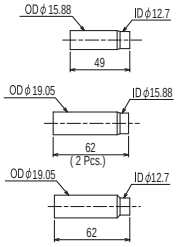

For Liquid pipe:

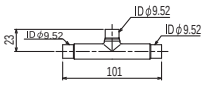

<Deformed pipe(Accessory)>

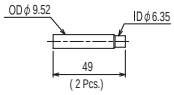

ID: Inner Diameter OD: Outer Diameter

CMY-Y102L-G2

Ref.: CMY_Y102L_G2_EXD_EUDB_SI
mm

For Gas pipe:

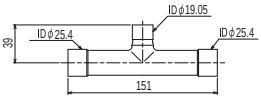

<Deformed pipe(Accessory)>

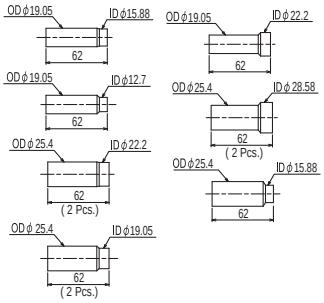

For Liquid pipe:

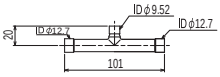

<Deformed pipe(Accessory)>

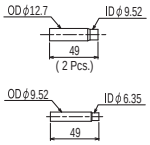

ID: Inner Diameter OD: Outer Diameter

CMY-Y202-G2

Ref.: CMY_Y202_G2_EXD_EUDB_SI
mm

For Gas pipe:

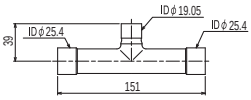

<Deformed pipe(Accessory)>

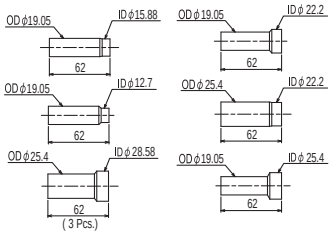

For Liquid pipe:

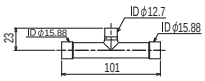

<Deformed pipe(Accessory)>

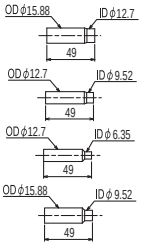

ID: Inner Diameter OD: Outer Diameter

CMY-Y302-G2

Ref.: CMY_Y302_G2_EXD_EUDB_SI
mm

For Gas pipe:

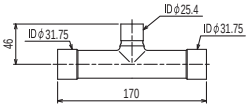

<Deformed pipe(Accessory)>

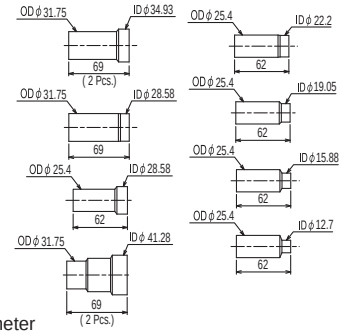

For Liquid pipe:

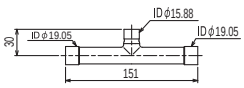

<Deformed pipe(Accessory)>

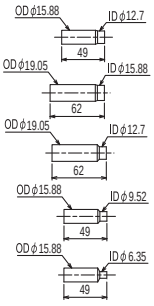

ID: Inner Diameter OD: Outer Diameter

7-2. HEADER

Piping for CITY MULTI can be easily done with Joints and Headers provided by MITSUBISHI ELECTRIC CORP..
There are 3 sets of Headers selectable for piping. Details for applying the Header sets are referable to System Design 3, or their own Installation Manual.

CMY-Y104-G

Ref.: CMY_Y104-G_EXD_EUDB_SI.
mm

For Gas pipe:

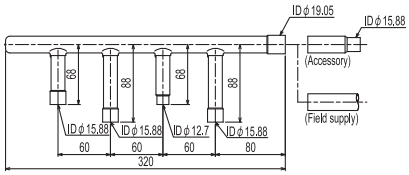

<Deformed pipe(Accessory)>

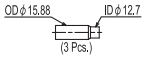

For Liquid pipe:

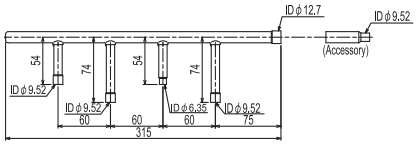

<Deformed pipe(Accessory)>

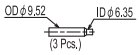

ID: Inner Diameter OD: Outer Diameter
NOTE: Besides above mentioned accessories, caps for pipe of φ 6.35, φ 9.52, φ 12.7, φ 15.88 (each diameter 1 piece) are included in the Header set.

CMY-Y108-G

Ref.: CMY_Y108-G_EXD_EUDB_SI
mm

For Gas pipe:

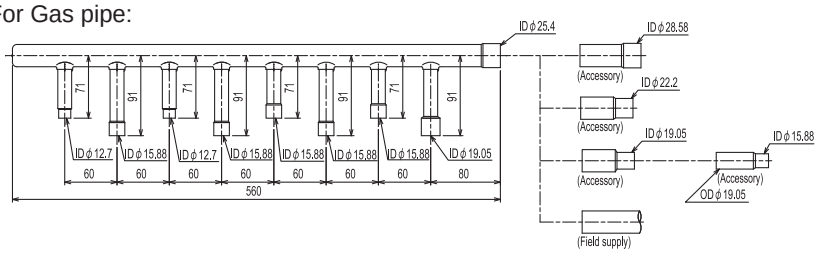

<Deformed pipe(Accessory)>

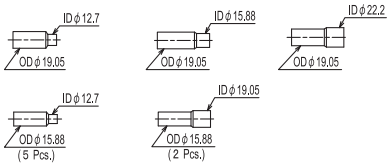

For Liquid pipe:

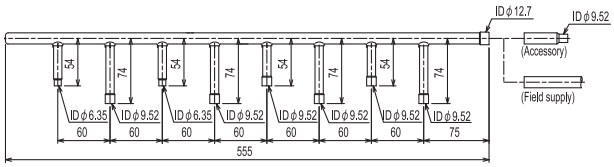

<Deformed pipe(Accessory)>

ID: Inner Diameter OD: Outer Diameter
NOTE: Besides above mentioned accessories, caps for pipe of φ 6.35, φ 9.52, φ 12.7, φ 15.88 (each diameter 2 pieces) and 1 cap for pipe of φ 19.05 are included in the Header set.

CMY-Y1010-G

Ref.: CMY_Y1010-G_EXD_EUDB_SI
mm

For Gas pipe:

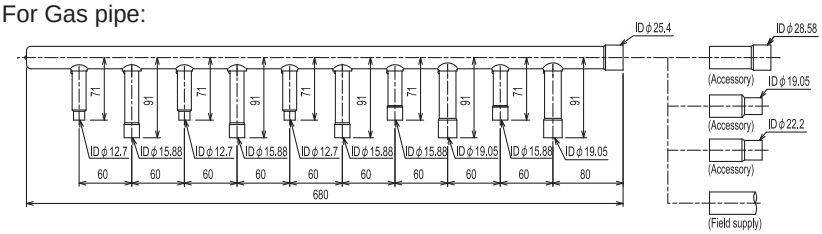

<Deformed pipe(Accessory)>

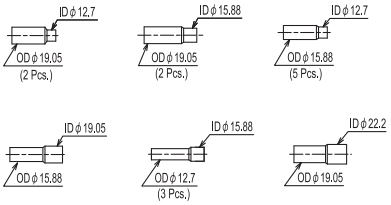

For Liquid pipe:

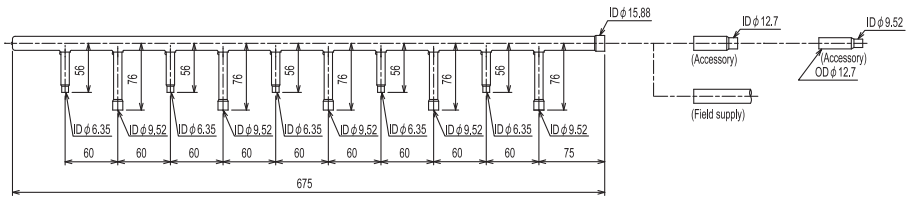

<Deformed pipe(Accessory)>

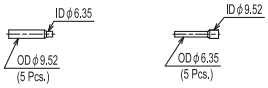

ID: Inner Diameter OD: Outer Diameter
NOTE: Besides above mentioned accessories, caps for pipe of φ 6.35, φ 9.52, φ 12.7, φ 15.88 (each diameter 2 pieces) and 1 cap for pipe of φ 19.05 are included in the Header set.

7-3. OUTDOOR TWINNING KIT

For PUHY-(E)P-YSHM, following optional Outdoor Twinning Kit is needed to use to combine to refrigerant flows of its PUHY-P-YHM. Details of selecting the proper kit should be referred to the System Design Section.

CMY-Y100VBK2

mm

For Gas pipe: For Liquid pipe: <Deformed pipe(Accessory)>

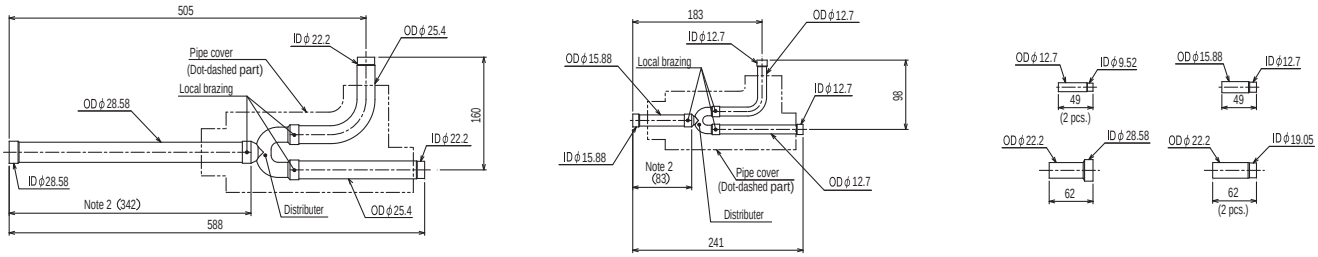

ID: Inner Diameter OD: Outer Diameter

CMY-Y200VBK2

Ref.: CMY_Y200VBK2_EXD_EUDB_SI

mm

For Gas pipe: For Liquid pipe: <Deformed pipe(Accessory)>

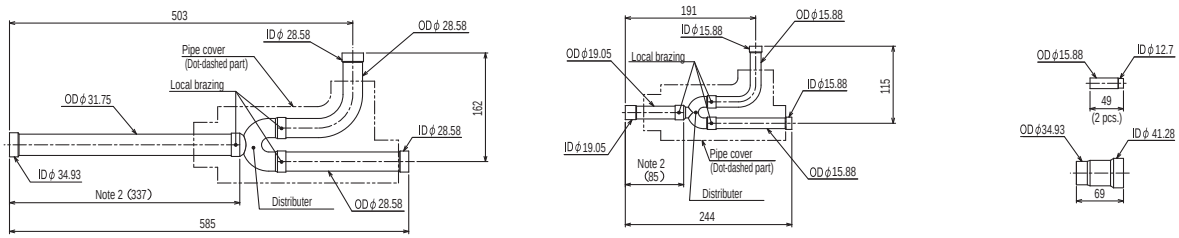

ID: Inner Diameter OD: Outer Diameter

CMY-Y300VBK2

Ref.: CMY_Y300VBK2_EXD_EUDB_SI

mm

For Gas pipe: For Liquid pipe: <Deformed pipe(Accessory)>

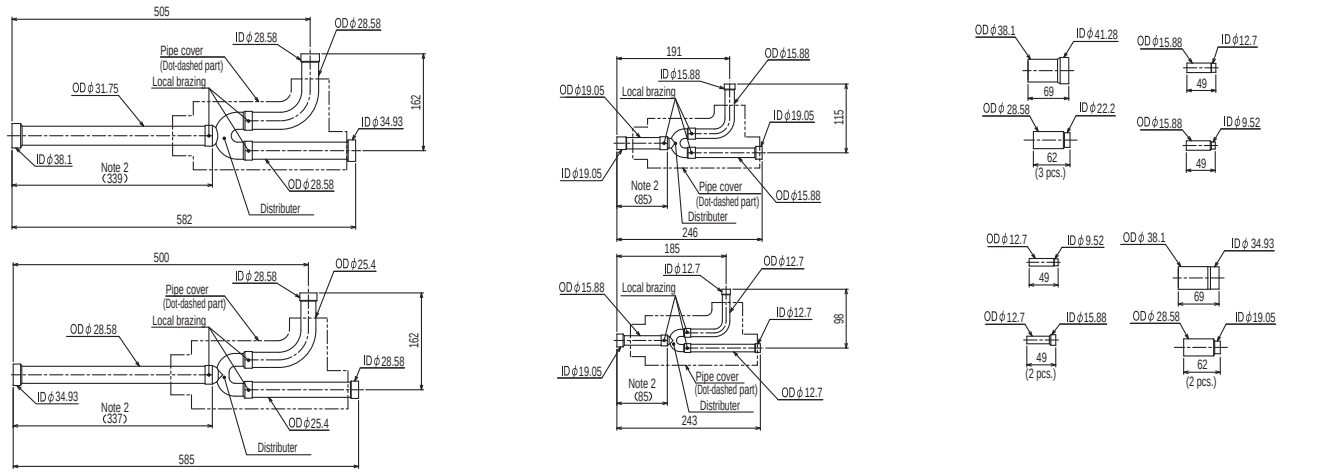

ID: Inner Diameter OD: Outer Diameter

Note 1. Reference the attitude angle of the branch pipe below the fig.

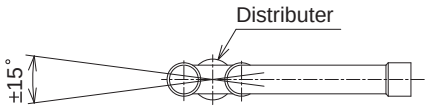

The angle of the branch pipe is within ±15° against the horizontal plane.

2. Use the attached pipe to braze the port-opening of the distributer.
3. Pipe diameter is indicated by inside diameter.

OUTDOOR UNITS

1. SPECIFICATIONS ..... 2 - 134
2. EXTERNAL DIMENSIONS ..... 2 - 137
3. CENTER OF GRAVITY ..... 2 - 140
4. ELECTRICAL WIRING DIAGRAMS ..... 2 - 141
5. SOUND LEVELS ..... 2 - 142
6. CAPACITY TABLES ..... 2 - 143
   6-1. Correction by temperature ..... 2 - 143
   6-2. Correction by total indoor ..... 2 - 144
   6-3. Correction by refrigerant piping length ..... 2 - 146
   6-4. Correction at frost and defrost ..... 2 - 147
   6-5. Operation temperature range ..... 2 - 147
7. OPTIONAL PARTS ..... 2 - 148
   7-1. JOINT ..... 2 - 148
   7-2. HEADER ..... 2 - 149
   7-3. OUTDOOR TWINNING KIT ..... 2 - 150

1. SPECIFICATIONS

Model			PUHY-HP200YHM-A(-BS)	PUHY-HP250YHM-A(-BS)
Power source			3-phase 4-wire 380-400-415V 50/60Hz	3-phase 4-wire 380-400-415V 50/60Hz
Cooling capacity (Nominal)	*1	kW	22.4	28.0
	*1	kcal / h	19,300	24,100
	*1	BTU / h	76,400	95,500
	Power input	kW	6.40	9.06
	Current input	A	10.8-10.2-9.8	15.2-14.5-14.0
	COP	kW / kW	3.50	3.09
Temp. range of cooling	Indoor	W.B.	15 to 24degC(59 to 75degF)	15 to 24degC(59 to 75degF)
	Outdoor	D.B.	-5 to 43degC(23 to 109degF)	-5 to 43degC(23 to 109degF)
Heating capacity (Nominal)	*2	kW	25.0	31.5
	*2	kcal / h	21,500	27,100
	*2	BTU / h	85,300	107,500
	Power input	kW	6.52	8.94
	Current input	A	11.0-10.4-10.0	15.0-14.3-13.8
	COP	kW / kW	3.83	3.52
Temp. range of heating	Indoor	D.B.	15 to 27degC(59 to 81degF)	15 to 27degC(59 to 81degF)
	Outdoor	W.B.	-25 to 15.5degC(-13 to 60degF)	-25 to 15.5degC(-13 to 60degF)
Indoor unit connectable	Total capacity		50 to 130 % of outdoor unit capacity	50 to 130 % of outdoor unit capacity
	Model / Quantity		P15 to P250 / 1 to 17	P15 to P250 / 1 to 21
Sound pressure level (measured in anechoic room)		dB <A>	56	57
Refrigerant piping diameter	Liquid pipe	mm(in.)	12.7(1/2) Brazed	12.7(1/2) Brazed
	Gas pipe	mm(in.)	19.05(3/4) Brazed	22.2(7/8) Brazed
FAN	Type x Quantity		Propeller fan x 1	Propeller fan x 1
	Air flow rate	m^3 / min	225	225
		L/s	3,750	3,750
		cfm	7,945	7,945
	Control, Driving mechanism		Inverter-control,Direct-driven by motor	Inverter-control,Direct-driven by motor
	Motor output	kW	0.92 x 1	0.92 x 1
*3	External static press.		0 Pa (0 mmH_2O)	0 Pa (0 mmH_2O)
Compressor	Type x Quantity		Inverter scroll hermetic compressor	Inverter scroll hermetic compressor
	Manufacture		AC&R Works, MITSUBISHI ELECTRIC CORPORATION	AC&R Works, MITSUBISHI ELECTRIC CORPORATION
	Starting method		Inverter	Inverter
	Motor output	kW	5.3	6.7
	Case heater	kW	0.045	0.045
	Lubricant		MEL32	MEL32
External finish			Pre-coated galvanized steel sheets <MUNSELL 5Y 8/1 or similar>	Pre-coated galvanized steel sheets <MUNSELL 5Y 8/1 or similar>
External dimension HxWxD		mm	1,650 x 920 x 760	1,650 x 920 x 760
		in.	65 x 36-1/4 x 29-15/16	65 x 36-1/4 x 29-15/16
Protection devices	High pressure protection		High pressure sensor, High pressure switch at 4.15MPa (601 psi)	High pressure sensor, High pressure switch at 4.15MPa (601 psi)
	Inverter circuit (COMP. / FAN)		Over-heat protection,Over-current protection	Over-heat protection,Over-current protection
	Compressor		Over-heat protection	Over-heat protection
	Fan motor		Thermal switch	Thermal switch
Refrigerant	Type x original charge		R410A x 9.0kg (20lbs)	R410A x 9.0kg (20lbs)
	Control		LEV and HIC circuit	LEV and HIC circuit
Net weight		kg(lbs)	220(486)	220(486)
Heat exchanger			Salt-resistant cross fin & copper tube	Salt-resistant cross fin & copper tube
HIC circuit (HIC: Heat Inter-Changer)			Copper pipe,tube-in-tube structure	Copper pipe,tube-in-tube structure
Defrosting method			Auto-defrost mode (Reversed refrigerant circle)	Auto-defrost mode (Reversed refrigerant circle)
Drawing	External		WKB94R110	WKB94R110
	Wiring		WKE79B230	WKE79B230
Standard attachment	Document		Installation Manual	Installation Manual
	Accessory		Refrigerant conn. pipe	Refrigerant conn. pipe
Optional parts			Joint: CMY-Y102S-G2 Header: CMY-Y104/108/1010-G	Joint: CMY-Y102S-G2 Header: CMY-Y104/108/1010-G
Remark			* Details on foundation work, duct work, insulation work, electrical wiring, power source switch, and other items shall be referred to the Installation Manual. * Due to continuing improvement, above specifications may be subject to change without notice.	* Details on foundation work, duct work, insulation work, electrical wiring, power source switch, and other items shall be referred to the Installation Manual. * Due to continuing improvement, above specifications may be subject to change without notice.

Note :

*1 Nominal cooling conditions (subject to JIS B8615-1)

Indoor :	27degCDB/19degCWB (81degFDB/66degFWB)
Outdoor :	35degCDB (95degFDB)
Pipe length :	7.5m(24-9/16ft.)
Level difference :	0m(0ft.)

*2 Nominal heating conditions (subject to JIS B8615-1)

Indoor :	20degCDB (68degFDB)
Outdoor :	7degCDB/6degCWB (45degFDB/43degFWB)
Pipe length :	7.5m(24-9/16ft.)
Level difference :	0m(0ft.)

*3 External static pressure option is available (30Pa, 60Pa / 3.1mmH_2O, 6.1mmH_2O).

Unit converter

kcal	=kW x 860
BTU/h	=kW x 3,412
cfm	=m^3/min x 35.31
lbs	=kg / 0.4536

*The specification data is subject to rounding variation.

Model			PUHY-HP400YSHM-A(-BS)
Power source			3-phase 4-wire 380-400-415V 50/60Hz
Cooling capacity (Nominal)	*1	kW	45.0
	*1	kcal / h	38,700
	*1	BTU / h	153,500
	Power input	kW	12.86
	Current input	A	21.7-20.6-19.8
	COP	kW / kW	3.49
Temp. range of cooling	Indoor	W.B.	15 to 24degC(59 to 75degF)
	Outdoor	D.B.	-5 to 43degC(23 to 109degF)
Heating capacity (Nominal)	*2	kW	50.0
	*2	kcal / h	43,000
	*2	BTU / h	170,600
	Power input	kW	13.35
	Current input	A	22.5-21.4-20.6
	COP	kW / kW	3.74
Temp. range of heating	Indoor	D.B.	15 to 27degC(59 to 81degF)
	Outdoor	W.B.	-25 to 15.5degC(-13 to 60degF)
Indoor unit connectable	Total capacity		50 to 130 % of outdoor unit capacity
	Model / Quantity		P15 to P250 / 1 to 34
Sound pressure level (measured in anechoic room)		dB <A>	59
Refrigerant piping diameter	Liquid pipe	mm(in.)	15.88(5/8) Brazed
	Gas pipe	mm(in.)	28.58(1-1/8) Brazed

Set Model

Model			PUHY-HP200YHM-A(-BS)	PUHY-HP200YHM-A(-BS)
FAN	Type x Quantity		Propeller fan x 1	Propeller fan x 1
	Air flow rate	m^3 / min	225	225
		L/s	3,750	3,750
		cfm	7,945	7,945
	Control, Driving mechanism		Inverter-control,Direct-driven by motor	Inverter-control,Direct-driven by motor
	Motor output	kW	0.92 x 1	0.92 x 1
*3	External static press.		0 Pa (0 mmH_2O)	0 Pa (0 mmH_2O)
Compressor	Type x Quantity		Inverter scroll hermetic compressor	Inverter scroll hermetic compressor
	Manufacture		AC&R Works, MITSUBISHI ELECTRIC CORPORATION	AC&R Works, MITSUBISHI ELECTRIC CORPORATION
	Starting method		Inverter	Inverter
	Motor output	kW	5.3	5.3
	Case heater	kW	0.045	0.045
	Lubricant		MEL32	MEL32
External finish			Pre-coated galvanized steel sheets <MUNSELL 5Y 8/1 or similar>	Pre-coated galvanized steel sheets <MUNSELL 5Y 8/1 or similar>
External dimension HxWxD		mm	1,650 x 920 x 760	1,650 x 920 x 760
		in.	65 x 36-1/4 x 29-15/16	65 x 36-1/4 x 29-15/16
Protection devices	High pressure protection		High pressure sensor, High pressure switch at 4.15MPa (601 psi)	High pressure sensor, High pressure switch at 4.15MPa (601 psi)
	Inverter circuit (COMP. / FAN)		Over-heat protection,Over-current protection	Over-heat protection,Over-current protection
	Compressor		Over-heat protection	Over-heat protection
	Fan motor		Thermal switch	Thermal switch
Refrigerant	Type x original charge		R410A x 9.0kg (20lbs)	R410A x 9.0kg (20lbs)
	Control		LEV and HIC circuit	
Net weight		kg(lbs)	220(486)	220(486)
Heat exchanger			Salt-resistant cross fin & copper tube	Salt-resistant cross fin & copper tube
HIC circuit (HIC: Heat Inter-Changer)			Copper pipe,tube-in-tube structure	Copper pipe,tube-in-tube structure
Pipe between unit and disrributor	Liquid pipe	mm(in.)	9.52(3/8) Flare	9.52(3/8) Flare
	Gas pipe	mm(in.)	19.05(3/4) Brazed	19.05(3/4) Brazed
Defrosting method			Auto-defrost mode (Reversed refrigerant circle)	
Drawing	External		WKB94R111	
	Wiring		WKE79B230	WKE79B230
Standard attachment	Document		Installation Manual	
	Accessory		Refrigerant conn. pipe	
Optional parts			Outdoor Twinning kit: CMY-Y100VBK2 Joint: CMY-Y102S/L-G2,CMY-Y202-G2 Header: CMY-Y104/108/1010-G	
Remark			* Details on foundation work, duct work, insulation work, electrical wiring, power source switch, and other items shall be referred to the Installation Manual. * Due to continuing improvement, above specifications may be subject to change without notice.	

Note :

	*1 Nominal cooling conditions (subject to JIS B8615-1)	*2 Nominal heating conditions (subject to JIS B8615-1)
Indoor :	27degCDB/19degCWB (81degFDB/66degFWB)	20degCDB (68degFDB)
Outdoor :	35degCDB (95degFDB)	7degCDB/6degCWB (45degFDB/43degFWB)
Pipe length :	7.5m(24-9/16ft.)	7.5m(24-9/16ft.)
Level difference :	0m(0ft.)	0m(0ft.)

*3 External static pressure option is available (30Pa, 60Pa / 3.1mmH_2O, 6.1mmH_2O).

Unit converter

kcal	=kW x 860
BTU/h	=kW x 3,412
cfm	=m^3/min x 35.31
lbs	=kg / 0.4536

*The specification data is subject to rounding variation.

HP

Model			PUHY-HP500YSHM-A(-BS)
Power source			3-phase 4-wire 380-400-415V 50/60Hz
Cooling capacity (Nominal)	*1	kW	56.0
	*1	kcal / h	48,200
	*1	BTU / h	191,100
	Power input	kW	18.16
	Current input	A	30.6-29.1-28.0
	COP	kW / kW	3.08
Temp. range of cooling	Indoor	W.B.	15 to 24degC(59 to 75degF)
	Outdoor	D.B.	-5 to 43degC(23 to 109degF)
Heating capacity (Nominal)	*2	kW	63.0
	*2	kcal / h	54,200
	*2	BTU / h	215,000
	Power input	kW	18.04
	Current input	A	30.4-28.9-27.8
	COP	kW / kW	3.49
Temp. range of heating	Indoor	D.B.	15 to 27degC(59 to 81degF)
	Outdoor	W.B.	-25 to 15.5degC(-13 to 60degF)
Indoor unit connectable	Total capacity		50 to 130 % of outdoor unit capacity
	Model / Quantity		P15 to P250 / 1 to 43
Sound pressure level (measured in anechoic room)		dB <A>	60
Refrigerant piping diameter	Liquid pipe	mm(in.)	15.88(5/8) Brazed
	Gas pipe	mm(in.)	28.58(1-1/8) Brazed

Set Model

Model			PUHY-HP250YHM-A(-BS)	PUHY-HP250YHM-A(-BS)
FAN	Type x Quantity		Propeller fan x 1	Propeller fan x 1
	Air flow rate	m^3 / min	225	225
		L/s	3,750	3,750
		cfm	7,945	7,945
	Control, Driving mechanism		Inverter-control,Direct-driven by motor	Inverter-control,Direct-driven by motor
	Motor output	kW	0.92 x 1	0.92 x 1
*3	External static press.		0 Pa (0 mmH_2O)	0 Pa (0 mmH_2O)
Compressor	Type x Quantity		Inverter scroll hermetic compressor	Inverter scroll hermetic compressor
	Manufacture		AC&R Works, MITSUBISHI ELECTRIC CORPORATION	AC&R Works, MITSUBISHI ELECTRIC CORPORATION
	Starting method		Inverter	Inverter
	Motor output	kW	6.7	6.7
	Case heater	kW	0.045	0.045
	Lubricant		MEL32	MEL32
External finish			Pre-coated galvanized steel sheets <MUNSELL 5Y 8/1 or similar>	Pre-coated galvanized steel sheets <MUNSELL 5Y 8/1 or similar>
External dimension HxWxD		mm	1,650 x 920 x 760	1,650 x 920 x 760
		in.	65 x 36-1/4 x 29-15/16	65 x 36-1/4 x 29-15/16
Protection devices	High pressure protection		High pressure sensor, High pressure switch at 4.15MPa (601 psi)	High pressure sensor, High pressure switch at 4.15MPa (601 psi)
	Inverter circuit (COMP. / FAN)		Over-heat protection,Over-current protection	Over-heat protection,Over-current protection
	Compressor		Over-heat protection	Over-heat protection
	Fan motor		Thermal switch	Thermal switch
Refrigerant	Type x original charge		R410A x 9.0kg (20lbs)	R410A x 9.0kg (20lbs)
	Control		LEV and HIC circuit	
Net weight		kg(lbs)	220(486)	220(486)
Heat exchanger			Salt-resistant cross fin & copper tube	Salt-resistant cross fin & copper tube
HIC circuit (HIC: Heat Inter-Changer)			Copper pipe,tube-in-tube structure	Copper pipe,tube-in-tube structure
Pipe between unit and disrributor	Liquid pipe	mm(in.)	9.52(3/8) Flare	9.52(3/8) Flare
	Gas pipe	mm(in.)	22.2(7/8) Brazed	22.2(7/8) Brazed
Defrosting method			Auto-defrost mode (Reversed refrigerant circle)	
Drawing	External		WKB94R111	
	Wiring		WKE79B230	WKE79B230
Standard attachment	Document		Installation Manual	
	Accessory		Refrigerant conn. pipe	
Optional parts			Outdoor Twinning kit: CMY-Y100VBK2 Joint: CMY-Y102S/L-G2,CMY-Y202-G2 Header: CMY-Y104/108/1010-G	
Remark			* Details on foundation work, duct work, insulation work, electrical wiring, power source switch, and other items shall be referred to the Installation Manual. * Due to continuing improvement, above specifications may be subject to change without notice.	

Note :

	*1 Nominal cooling conditions (subject to JIS B8615-1)	*2 Nominal heating conditions (subject to JIS B8615-1)
Indoor :	27degCDB/19degCWB (81degFDB/66degFWB)	20degCDB (68degFDB)
Outdoor :	35degCDB (95degFDB)	7degCDB/6degCWB (45degFDB/43degFWB)
Pipe length :	7.5m(24-9/16ft.)	7.5m(24-9/16ft.)
Level difference :	0m(0ft.)	0m(0ft.)

*3 External static pressure option is available (30Pa, 60Pa / 3.1mmH_2O, 6.1mmH_2O).

Unit converter

kcal	=kW x 860
BTU/h	=kW x 3,412
cfm	=m^3/min x 35.31
lbs	=kg / 0.4536

*The specification data is subject to rounding variation.

HP

PUHY-HP200, 250YHM-A(-BS)

Unit : mm

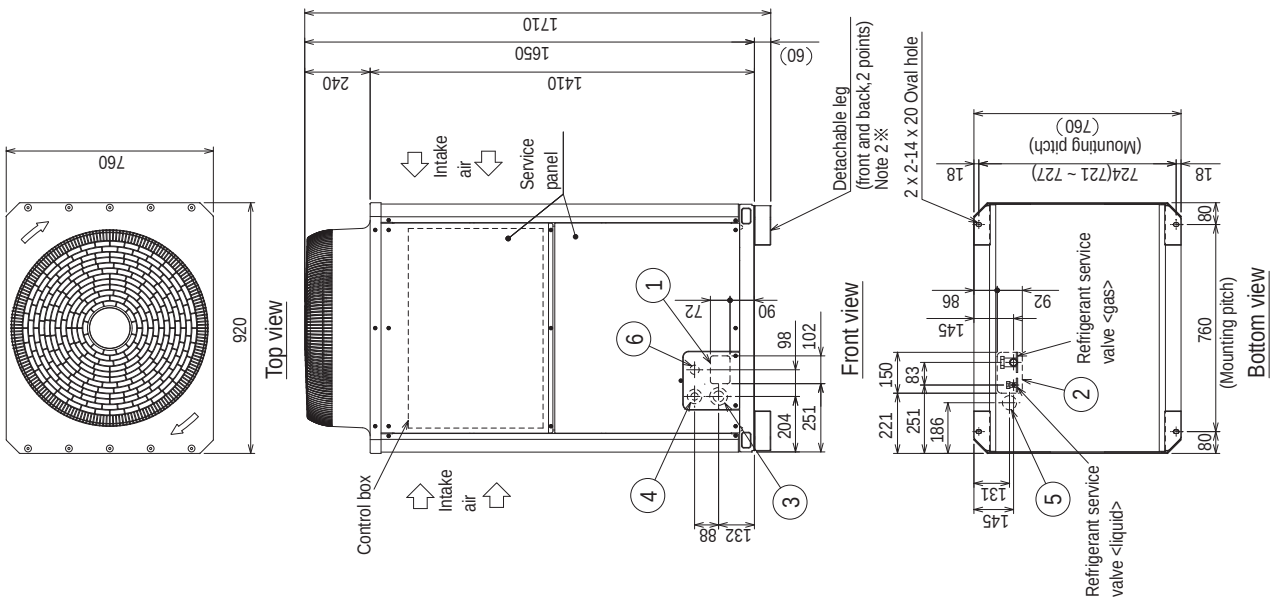

<Accessories>

● Connecting pipe

<Gas> · Elbow (ID25.4XOD25.4)····· P200,P250 1pc.
· Pipe (ID25.4XOD19.05)····· P200 1pc.
· Pipe (ID25.4XOD22.2)····· P250 1pc.

<Liquid> · Pipe (ID9.52XOD9.52)····· P200,P250 1pc.
· Pipe (ID9.52XOD12.7)····· P200,P250 1pc.

Note 1. Please refer to the next page for information regarding necessary spacing around the unit and foundation work.
2. The detachable leg can be removed at site.
3. At brazing of pipes,wrap the refrigerant service valve with wet cloth and keep the temperature of refrigerant service valve under 120°C.

NO.	Usage		Specifications
①	For pipes	Front through hole	102X72 Knockout hole
②		Bottom through hole	150X92 Knockout hole
③	For wires	Front through hole	ø65 or ø40 Knockout hole
④		Front through hole	ø52 or ø27 Knockout hole
⑤		Bottom through hole	ø52 Knockout hole
⑥	For transmission cables	Front through hole	ø34 Knockout hole

Connecting pipe specifications

Model	Position dimensions for the refrigerant service valve		Connection specifications for the refrigerant service valve *1	
	Liquid A	Gas B	Liquid	Gas
PUHY-HP200YHM	142	170	ø12.7 Brazed (ø9.52 Brazed) *2	ø19.05 Brazed
PUHY-HP250YHM		172		ø22.2 Brazed

*1 Connect by using the connecting pipes (for bottom piping and front piping) that are supplied.
*2 Indicates dimensions and connection specifications in the case the unit is used in combination with other outdoor units.

HP

2. EXTERNAL DIMENSIONS

PUHY-HP200, 250YHM-A(-BS)

Unit : mm

1.Required space around the unit

● In case of single installation

① Secure enough space around the unit as shown in the figure below.

· With a space of at least 300mm to the wall on the back of the unit

· With a space of at least 100mm to the wall on the back of the unit

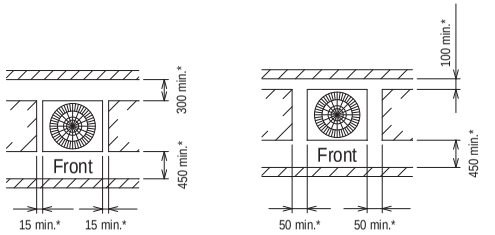

<Unit:mm>

② When the height of the walls on the front,back or on the sides<H> exceeds the wall height limit as defined below add the height that exceeds the height limit <h> to the figures that are marked with an asterisk.

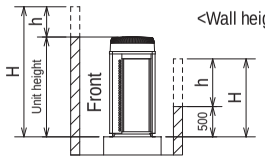

<Side view>

<Wall height limit> Front : Up to the unit height
Back : Up to 500mm from the unit bottom
Side : Up to the unit height

● In case of collective installation

① When multiple units are installed adjacent to each other, secure enough space to allow for air circulation and walkway between groups of units as shown in the figures below.
② At least two sides must be left open.
③ As with the single installation, add the height that exceeds the height limit<h> to the figures that are marked with an asterisk.

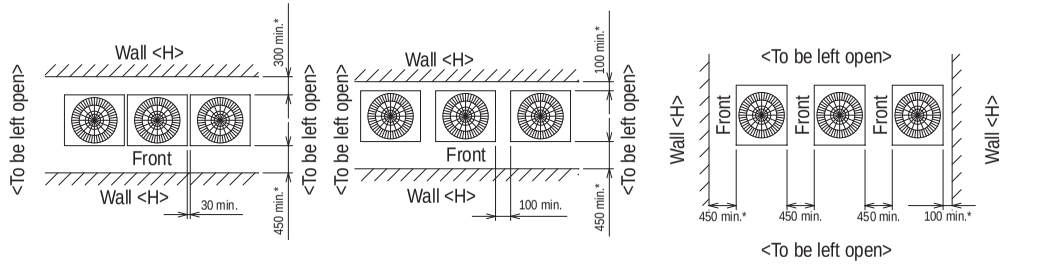

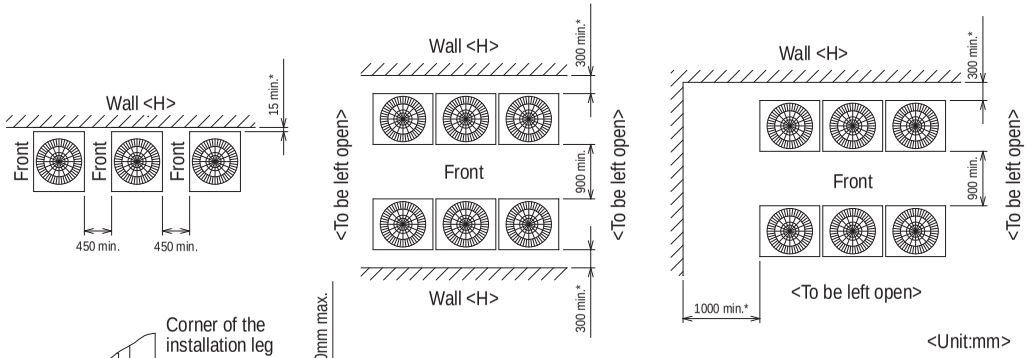

<Unit:mm>

2.Foundation work

① Take into consideration the surface strength,water drainage route, piping route,and wiring route when preparing the installation site.
<Note that the drain water comes out of the unit during operation.>
② Build the foundation in such way that the corner of the installation leg is securely supported as shown in the right figure.(Fig.A,B)
When using a rubber isolating cushion, please ensure it is large enough to cover the entire width of each of the unit's legs.
③ The protrusion length of the anchor bolt must not exceed 30mm.(Fig.A,B)
④ Use four fixing plates as shown in the right figure <field supply required> when using post-installed anchor bolts.(Fig.C,D)
⑤ To prevent small animals and water from entering the unit and damaging its parts, close the gap around the edges of through holes for pipes and wires with filler plates <field supply required>.
⑥ When the pipes or cables are routed at the bottom of the unit, make sure that the through hole at the base of the unit does not get blocked with the installation base.
⑦ Refer to the Installation Manual when installing units on an installation base.

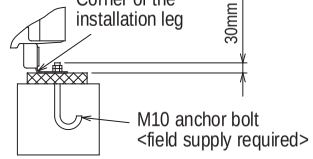

Fig.A (without detachable legs)

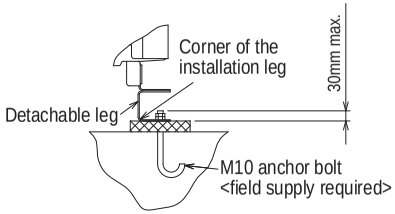

Fig.B (with detachable legs)

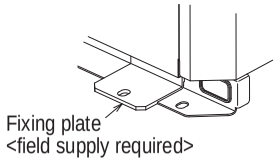

Fig.C (without detachable legs)

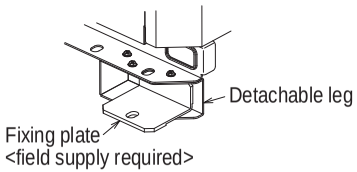

Fig.D (with detachable legs)

PUHY-HP400, 500YHM-A(-BS)

Unit : mm

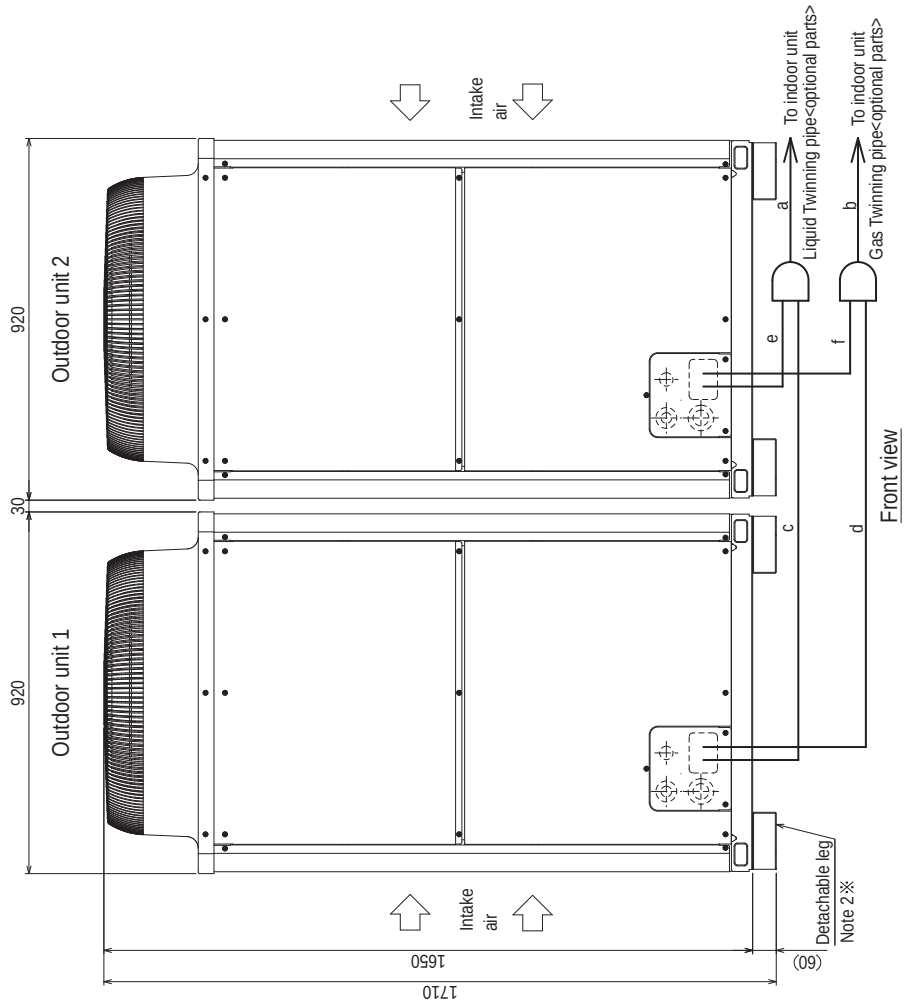

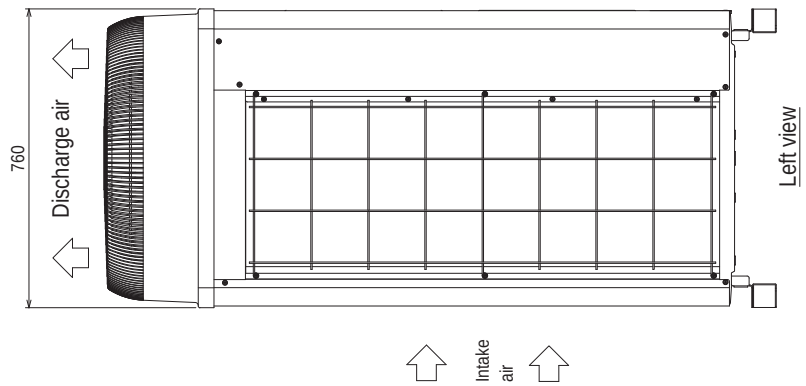

Twinning pipe connection size

Package unit name				PUHY-HP400Y5HM-A(-BS)	PUHY-HP500Y5HM-A(-BS)
Component unit name	Outdoor unit 1			PUHY-HP200YHM-A(-BS)	PUHY-HP250YHM-A(-BS)
	Outdoor unit 2			PUHY-HP200YHM-A(-BS)	PUHY-HP250YHM-A(-BS)
Outdoor Twinning Kit(optional parts)				CMY-Y100VBK2	
Indoor unit~Twinning pipe	Liquid	a		ø15.88	
	Gas	b		ø28.58	
Twinning pipe~Outdoor unit 1	Liquid	c		ø9.52	ø9.52
	Gas	d		ø19.05	ø22.2
Twinning pipe~Outdoor unit 2	Liquid	e		ø9.52	ø9.52
	Gas	f		ø19.05	ø22.2

Note 1. Connect the pipes as shown in the figure above. Refer to the table above for the pipe size.
2. The detachable leg can be removed at site.
3. Twinning pipes should not be tilted more than 15 degrees from the ground.Be sure to see the Installation Manual for details of Twinning pipe installation.
4. The pipe section before the Twinning pipe (sections "a" and "b" in the figure) must have at least 500mm of straight section (*including the straight pipe that is supplied with the Twinning pipe).
5. Only use the Twinning pipe by Mitsubishi (optional parts).

HP

PUHY-HP200,250YHM-A

Unit : mm(in.)

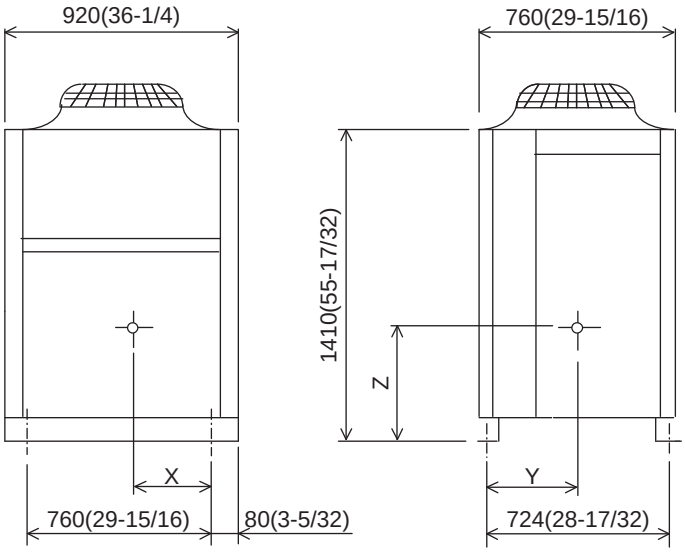

Model	X	Y	Z
PUHY-HP200YHM-A	315(12-13/32)	317(12-1/2)	635(25)
PUHY-HP250YHM-A	315(12-13/32)	317(12-1/2)	635(25)

HP

PUHY-HP200, 250YHM-A(-BS)

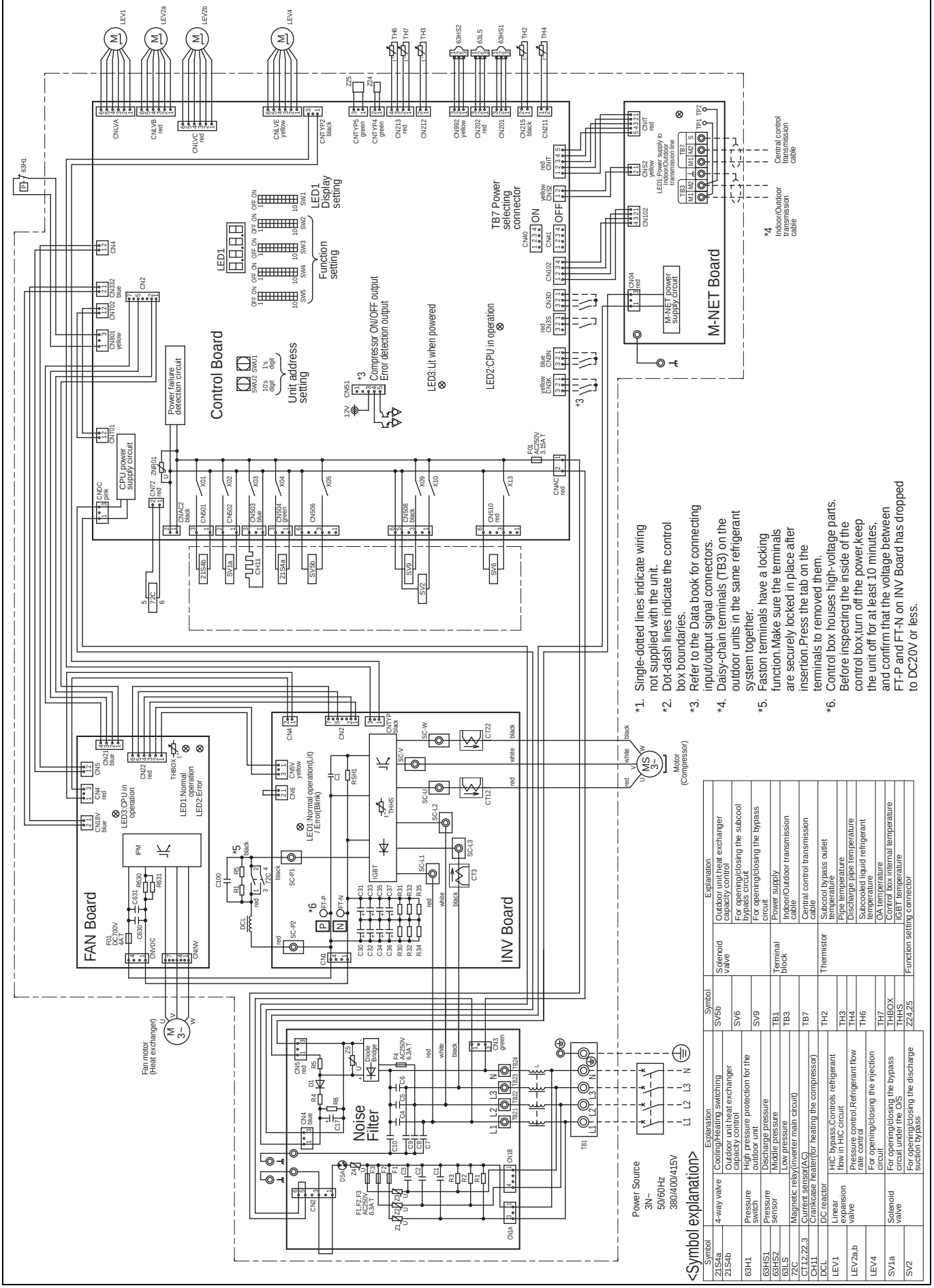

*1. Single-dotted lines indicate wiring not supplied with the unit.

*2. Dot-dash lines indicate the control box boundaries.

*3. Refer to the Data book for connecting input/output signal connectors.

*4. Daisy-chain terminals (TB3) on the outdoor units in the same refrigerant system together.

*5. Faston terminals have a locking function.Make sure the terminals are securely locked in place after insertion.Press the tab on the terminals to removed them.

*6. Control box houses high-voltage parts. Before inspecting the inside of the control box,turn off the power,keep the unit off for at least 10 minutes, and confirm that the voltage between FT-P and FT-N on INV Board has dropped to DC20V or less.

<Symbol explanation>

Symbol	Explanation	Symbol	Explanation	Symbol	Explanation
21S4a	4-way valve	Cooling/Heating switching	SV5b	Solenoid valve	Outdoor unit heat exchanger capacity control
21S4b		Outdoor unit heat exchanger capacity control	SV6		For opening/closing the subcool bypass circuit
63H1	Pressure switch	High pressure protection for the outdoor unit	SV9		For opening/closing the bypass circuit
63HS1	Pressure sensor	Discharge pressure	TB1	Terminal block	Power supply
63HS2		Middle pressure	TB3		Indoor/Outdoor transmission cable
63LS		Low pressure	TB7		Central control transmission cable
72C	Magnetic relay(inverter main circuit)		TH2	Thermistor	Subcool bypass outlet temperature
CT12,22,3	Current sensor(A.C)		TH3		Pipe temperature
CH11	Crankcase heater(for heating the compressor)		TH4		Discharge pipe temperature
DCL	DC reactor		TH6		Subcooled liquid refrigerant temperature
LEV1	Linear expansion valve	HIC bypass,Controls refrigerant flow in HIC circuit	TH7		OA temperature
LEV2a,b		Pressure control,Refrigerant flow rate control	THBOX		Control box internal temperature
LEV4		For opening/closing the injection circuit	THHS		IGBT temperature
SV1a	Solenoid valve	For opening/closing the bypass circuit under the O/S	Z24,25	Function setting connector	
SV2		For opening/closing the discharge suction bypass			

HP

Measurement condition
PUHY-HP200,250YHM-A

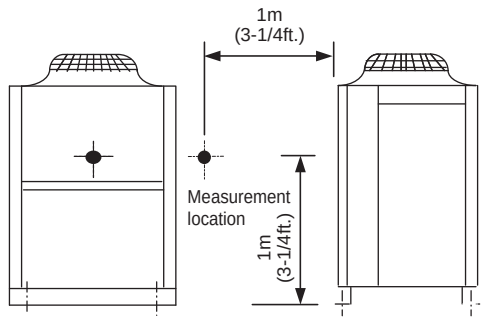

Measurement condition
PUHY-HP400,500YSHM-A

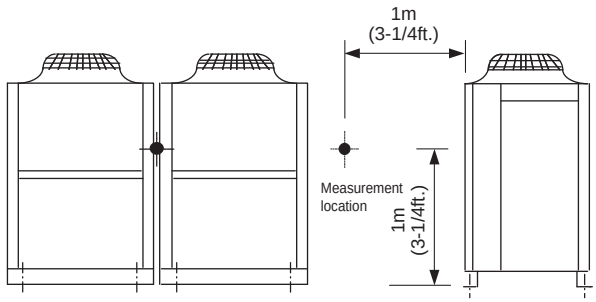

Sound level of PUHY-HP200YHM-A(-BS)

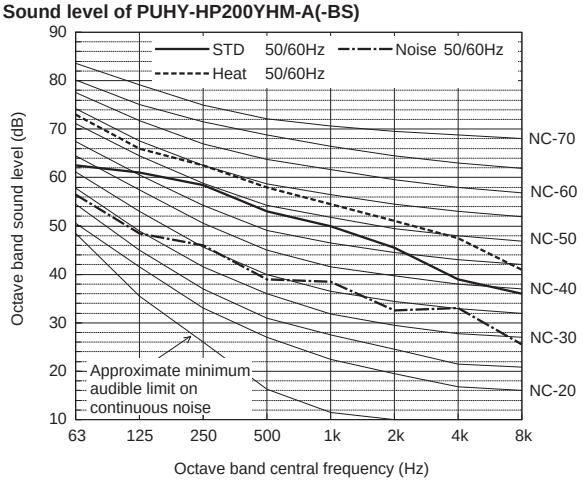

		63	125	250	500	1k	2k	4k	8k	dB(A)
STD cool/heat	50/60Hz	62.5	61.0	58.5	53.0	50.0	45.5	39.0	36.0	56.0
Low temp. heating	50/60Hz	73.0	66.0	62.5	58.0	54.5	51.0	47.5	41.0	61.0
Low noise mode	50/60Hz	56.5	48.5	46.0	39.0	38.5	32.5	33.0	25.5	44.0

When Low noise mode is set,the A/C system's capacity is limited. The system could return to normal operation from Low noise mode automatically in the case that the operation condition is severe.

Sound level of PUHY-HP400YSHM-A(-BS)

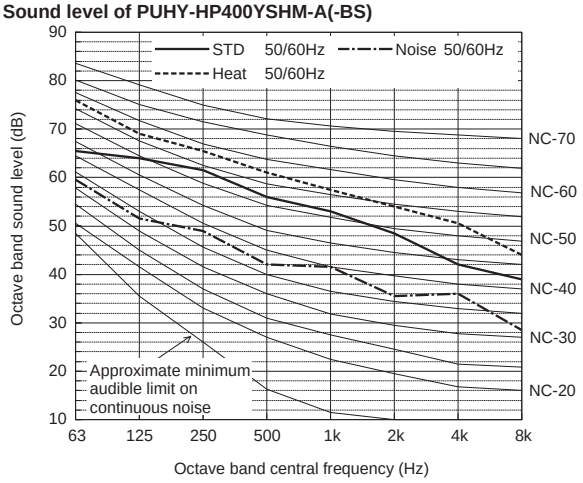

		63	125	250	500	1k	2k	4k	8k	dB(A)
STD cool/heat	50/60Hz	65.5	64.0	61.5	56.0	53.0	48.5	42.0	39.0	59.0
Low temp. heating	50/60Hz	76.0	69.0	65.5	61.0	57.5	54.0	50.5	44.0	64.0
Low noise mode	50/60Hz	59.5	51.5	49.0	42.0	41.5	35.5	36.0	28.5	47.0

When Low noise mode is set,the A/C system's capacity is limited. The system could return to normal operation from Low noise mode automatically in the case that the operation condition is severe.

Sound level of PUHY-HP250YHM-A(-BS)

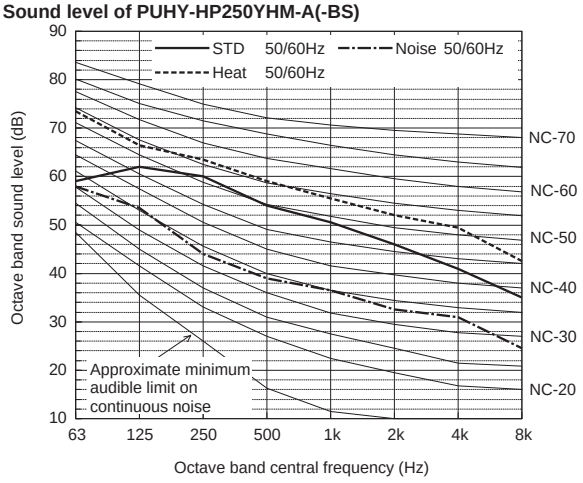

		63	125	250	500	1k	2k	4k	8k	dB(A)
STD cool/heat	50/60Hz	59.0	62.0	60.0	54.0	50.5	46.0	41.0	35.0	57.0
Low temp. heating	50/60Hz	73.5	66.5	63.5	59.0	55.5	52.0	49.5	42.5	62.0
Low noise mode	50/60Hz	58.0	53.5	44.0	39.0	36.5	32.5	31.0	24.5	44.0

When Low noise mode is set,the A/C system's capacity is limited. The system could return to normal operation from Low noise mode automatically in the case that the operation condition is severe.

Sound level of PUHY-HP500YSHM-A(-BS)

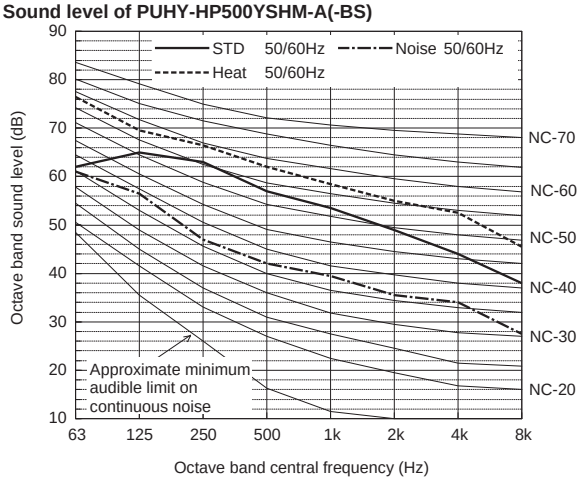

		63	125	250	500	1k	2k	4k	8k	dB(A)
STD cool/heat	50/60Hz	62.0	65.0	63.0	57.0	53.5	49.0	44.0	38.0	60.0
Low temp. heating	50/60Hz	76.5	69.5	66.5	62.0	58.5	55.0	52.5	45.5	65.0
Low noise mode	50/60Hz	61.0	56.5	47.0	42.0	39.5	35.5	34.0	27.5	47.0

When Low noise mode is set,the A/C system's capacity is limited. The system could return to normal operation from Low noise mode automatically in the case that the operation condition is severe.

6. CAPACITY TABLES

6-1. Correction by temperature

CITY MULTI could have varied capacity at different designing temperature. Using the nominal cooling/heating capacity value and the ratio below, the capacity can be observed at various temperature.

PUHY-		HP200YHM	HP250YHM
Nominal Cooling Capacity	kW	22.4	28.0
	BTU/h	76,400	95,500
Input	kW	6.40	9.06

PUHY-		HP400YSHM	HP500YSHM
Nominal Cooling Capacity	kW	45.0	56.0
	BTU/h	153.500	191,100
Input	kW	12.86	18.16

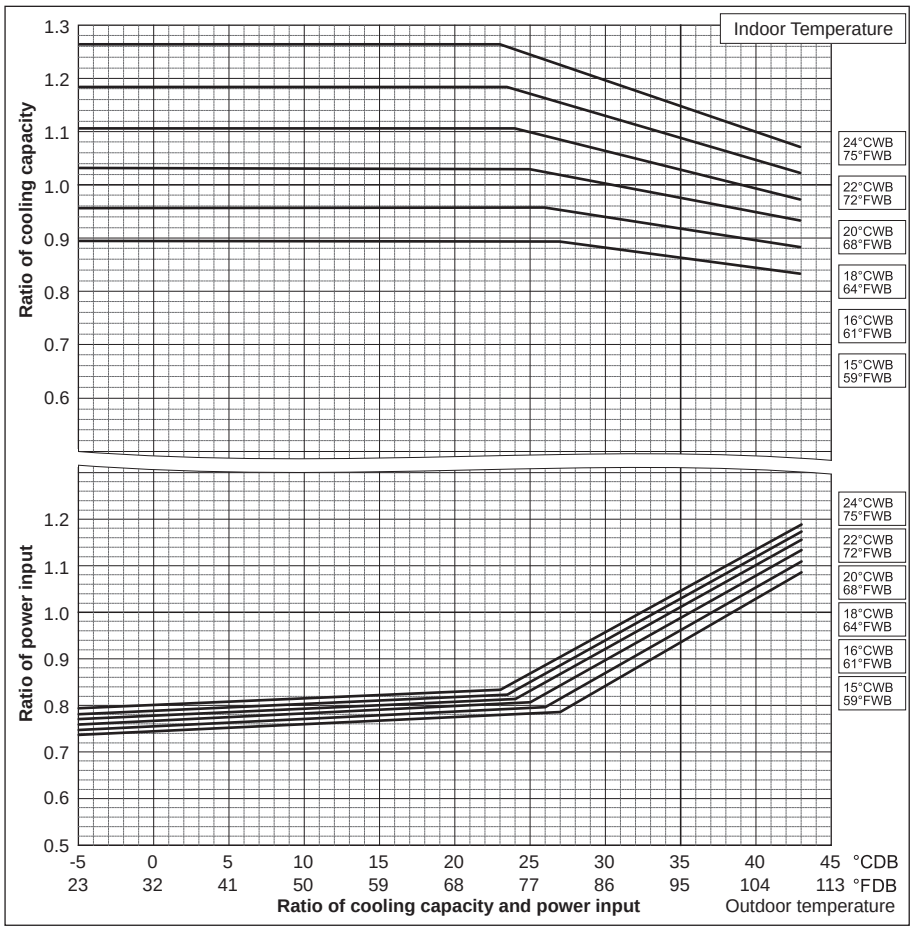

PUHY-		HP200YHM	HP250YHM
Nominal Heating Capacity	kW	25.0	31.5
	BTU/h	85,300	107,500
Input	kW	6.52	8.94

PUHY-		HP400YSHM	HP500YSHM
Nominal Heating Capacity	kW	50.0	63.0
	BTU/h	170,600	215,000
Input	kW	13.35	18.04

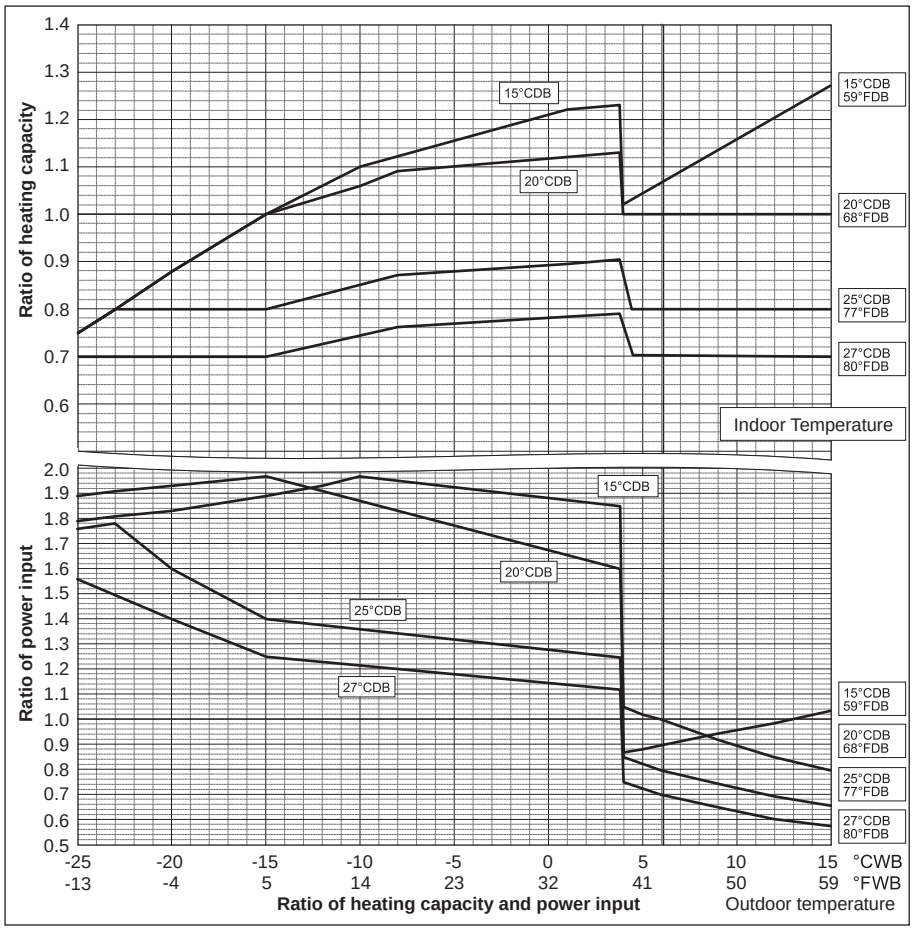

HP

6-2. Correction by total indoor

CITY MULTI system has different capacity and input at different total capacity of indoor unit connected. Using following tables, the maximum capacity can be observed so as to ensure the system having enough capacity.

PUHY-HP200YHM-A

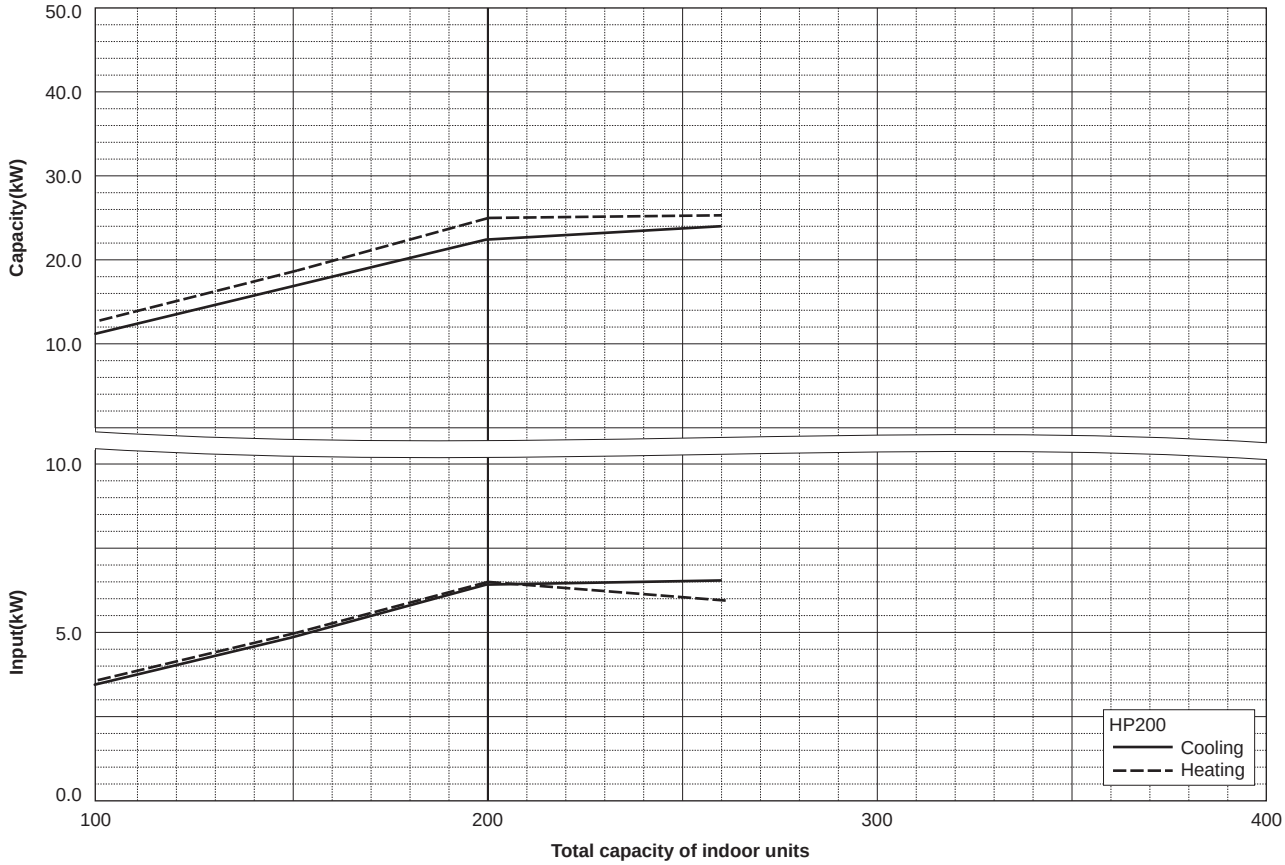

PUHY-HP250YHM-A

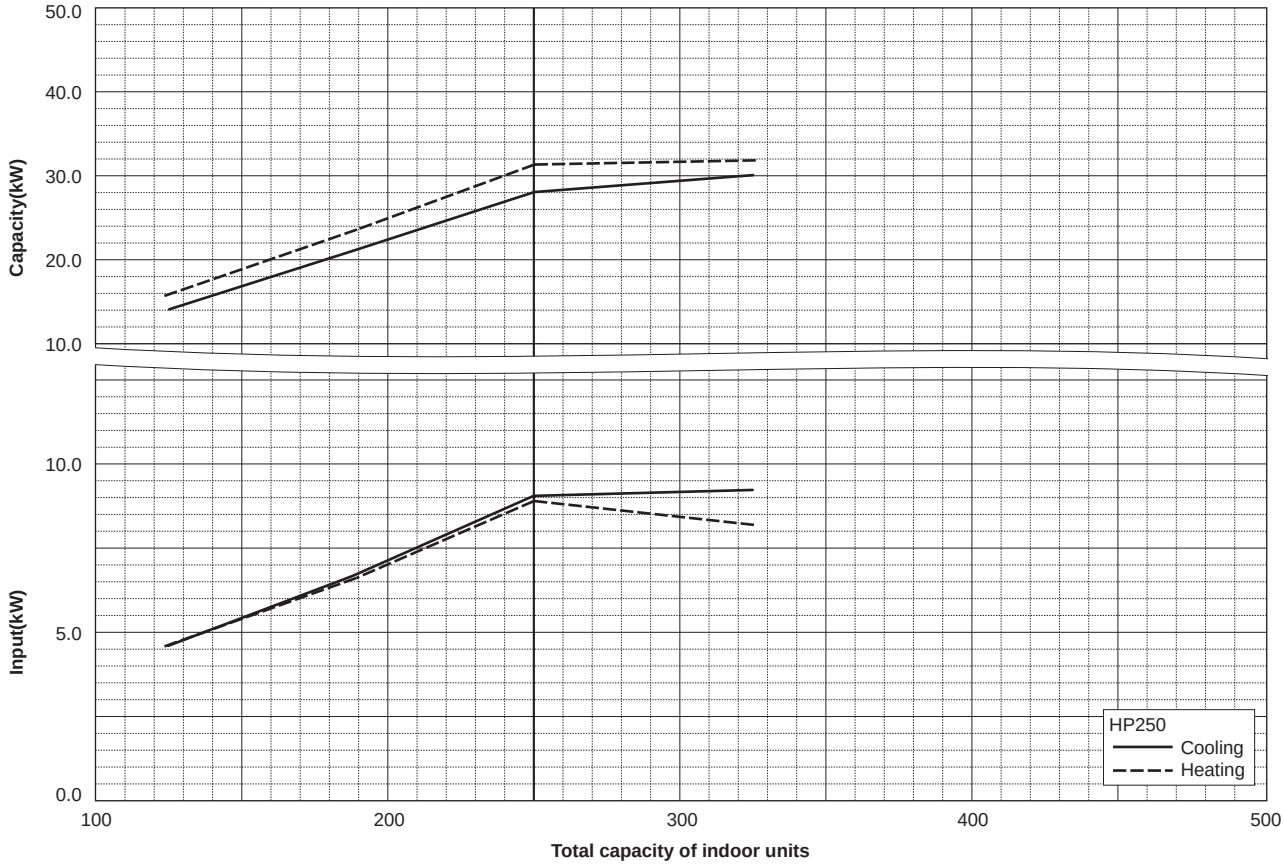

PUHY-HP400YSHM-A

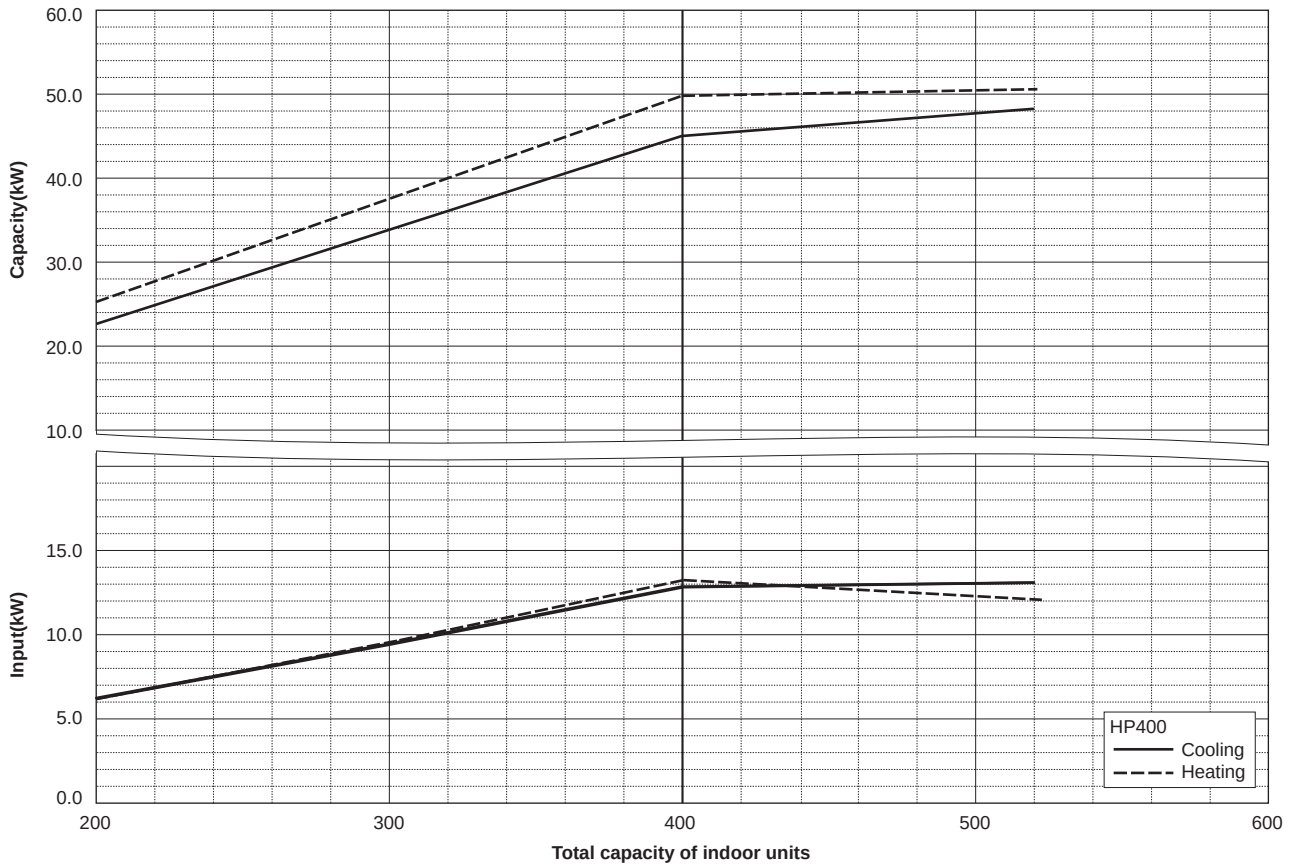

PUHY-HP500YSHM-A

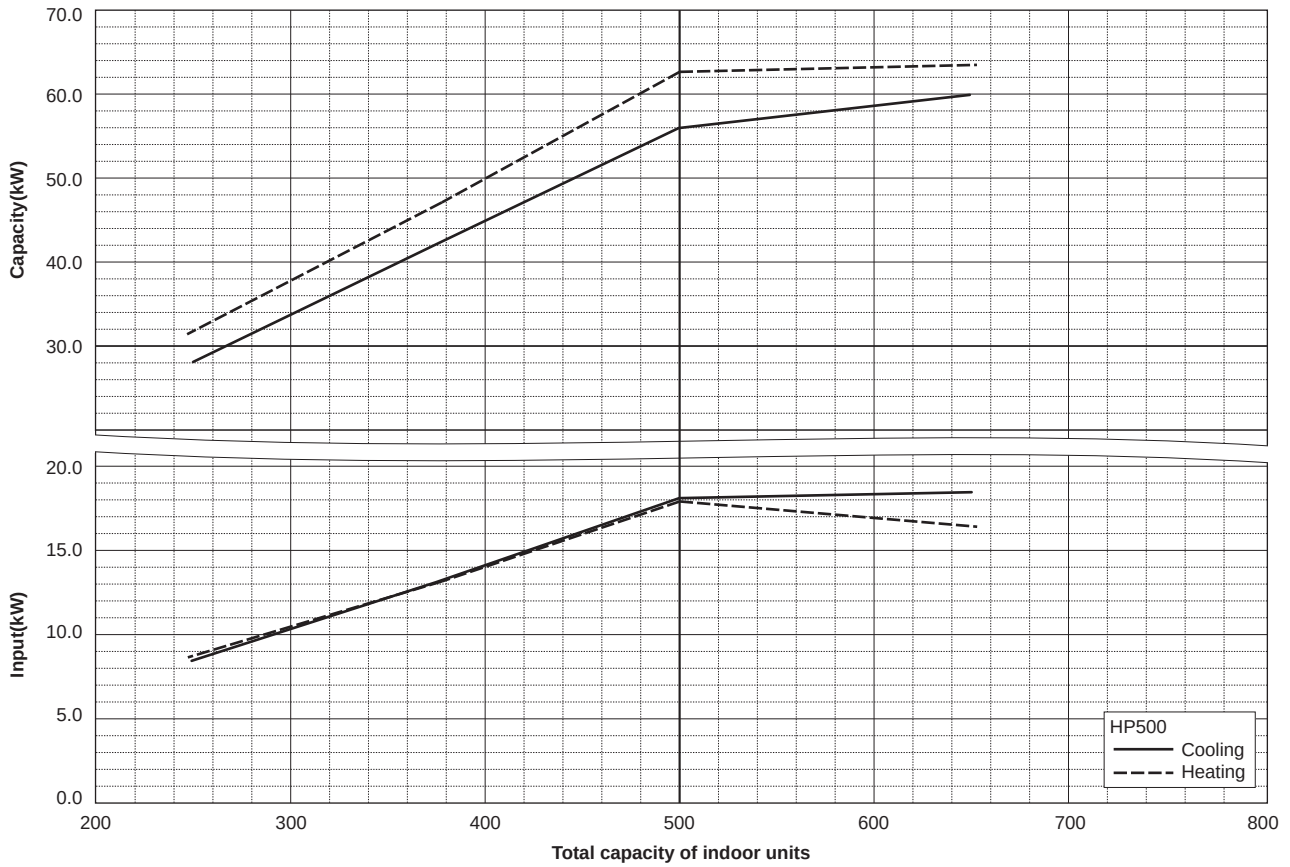

HP

6-3. Correction by refrigerant piping length

CITY MULTI system can extend the piping flexibly within its limitation for the actual situation. Yet, a decrease of cooling/heating capacity could happen correspondently. Using following correction factor according to the equivalent length of the piping shown at 6-3-1 and 6-3-2, the capacity can be observed. 6-3-3 shows how to obtain the equivalent length of piping.

6-3-1. Cooling capacity correction

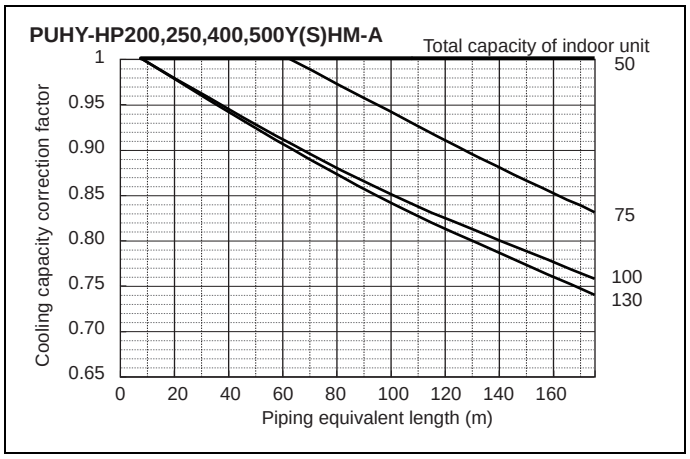

6-3-2. Heating capacity correction

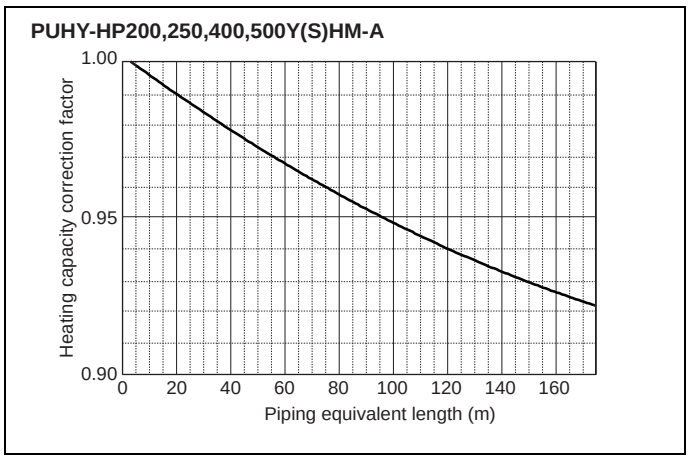

6-3-3. How to obtain the equivalent piping length

1 **PUHY-HP200YHM**
Equivalent length = (Actual piping length to the farthest indoor unit) + (0.35 x number of bends in the piping) m

2 **PUHY-HP250YHM**
Equivalent length = (Actual piping length to the farthest indoor unit) + (0.42 x number of bends in the piping) m

3 **PUHY-HP400,500YSHM**
Equivalent length = (Actual piping length to the farthest indoor unit) + (0.50 x number of bends in the piping) m

6-4. Correction at frost and defrost

Due to frost at the outdoor heat exchanger and the automatic defrost operation, the heating capacity of the outdoor unit can be calculated by multiplying the correction factor shown in the table below.

Table of correction factor at frost and defrost

Outdoor inlet air temp. °CWB	6	4	2	1	0	-2	-4	-6	-8	-10	-25
Outdoor inlet air temp. °FWB	43	39	36	34	32	28	25	21	18	14	-13
PUHY-HP200,250,400,500Y(S)HM	1.00	0.95	0.85	0.85	0.85	0.87	0.87	0.87	0.87	0.92	0.95

6-5. Operation temperature range

• Cooling

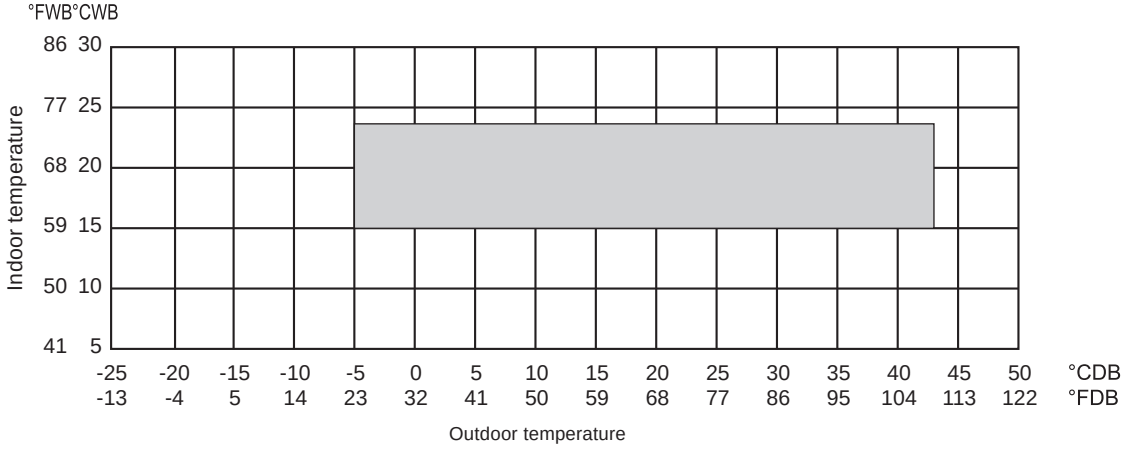

• Heating

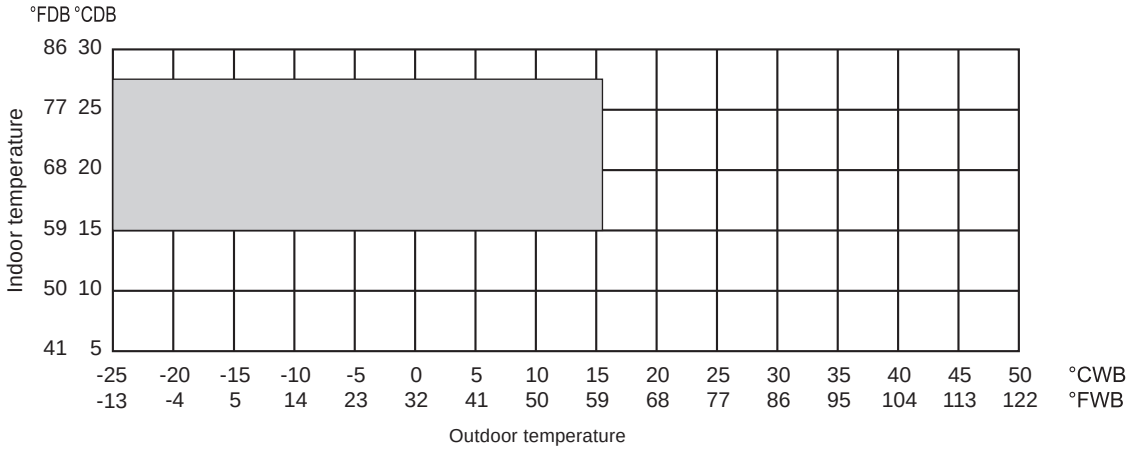

7-1. JOINT

Piping for CITY MULTI can be easily done with Joints and headers provided by MITSUBISHI ELECTRIC CORP.
There are 4 sets of Joints selectable for piping. Details for applying the Joint sets are referable to System Design 3, or their own Installation Manual.

CMY-Y102S-G2

Ref.: CMY_Y102S_G2_EXD_EUDB_SI
mm

For Gas pipe:

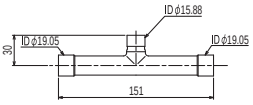

<Deformed pipe(Accessory)>

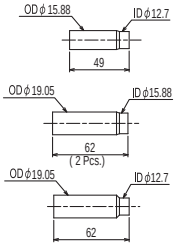

For Liquid pipe:

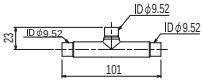

<Deformed pipe(Accessory)>

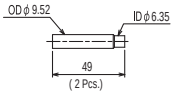

ID: Inner Diameter OD: Outer Diameter

CMY-Y102L-G2

Ref.: CMY_Y102L_G2_EXD_EUDB_SI
mm

For Gas pipe:

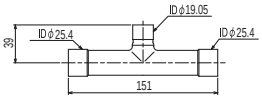

<Deformed pipe(Accessory)>

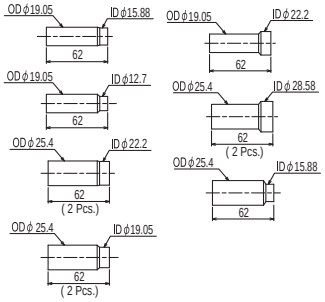

For Liquid pipe:

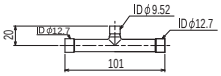

<Deformed pipe(Accessory)>

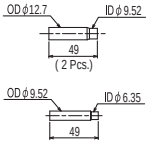

ID: Inner Diameter OD: Outer Diameter

CMY-Y202-G2

Ref.: CMY_Y202_G2_EXD_EUDB_SI
mm

For Gas pipe:

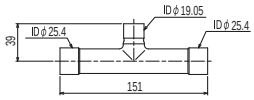

<Deformed pipe(Accessory)>

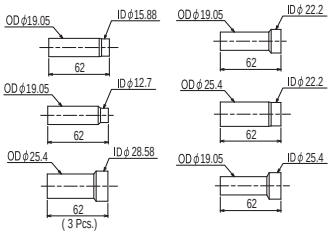

For Liquid pipe:

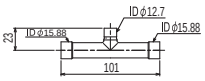

<Deformed pipe(Accessory)>

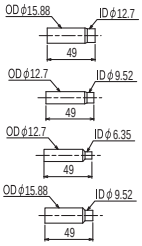

ID: Inner Diameter OD: Outer Diameter

7-2. HEADER

Piping for CITY MULTI can be easily done with Joints and Headers provided by MITSUBISHI ELECTRIC CORP.
There are 3 sets of Headers selectable for piping. Details for applying the Header sets are referable to System Design 3, or their own Installation Manual.

CMY-Y104-G

Ref.: CMY_Y104-G_EXD_EUDB_SI.
mm

For Gas pipe:

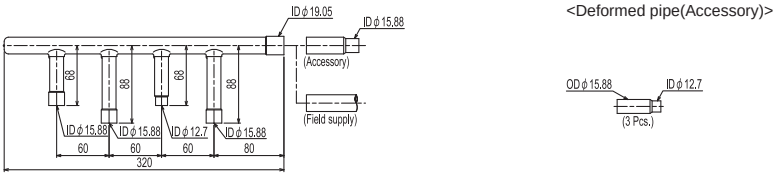

For Liquid pipe:

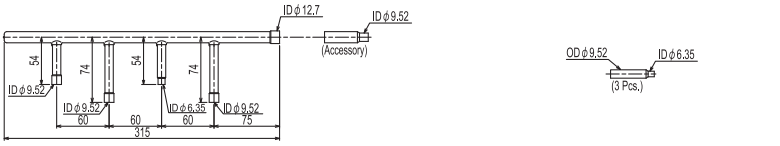

ID: Inner Diameter OD: Outer Diameter
NOTE: Besides above mentioned accessories, caps for pipe of φ6.35, φ9.52, φ12.7, φ15.88 (each diameter 1 piece) are included in the Header set.

CMY-Y108-G

Ref.: CMY_Y108-G_EXD_EUDB_SI
mm

For Gas pipe:

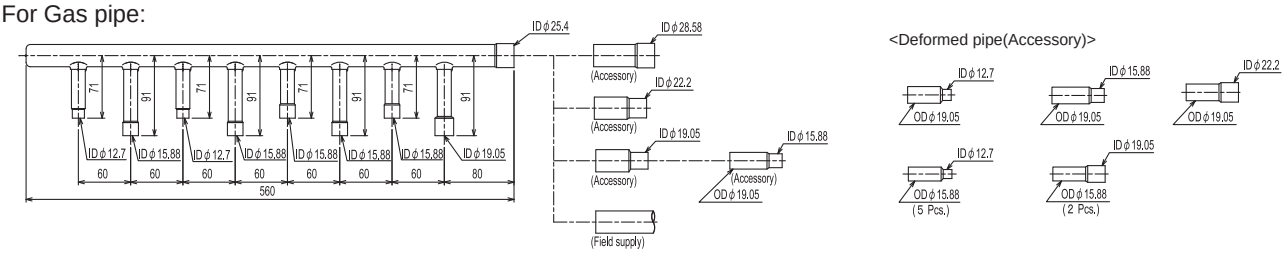

For Liquid pipe:

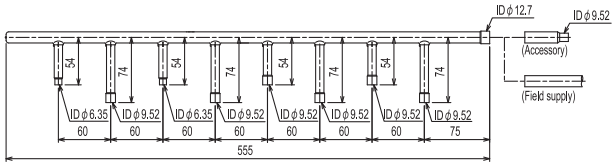

ID: Inner Diameter OD: Outer Diameter
NOTE: Besides above mentioned accessories, caps for pipe of φ6.35, φ9.52, φ12.7, φ15.88 (each diameter 2 pieces) and 1 cap for pipe of φ19.05 are included in the Header set.

CMY-Y1010-G

Ref.: CMY_Y1010-G_EXD_EUDB_SI
mm

For Gas pipe:

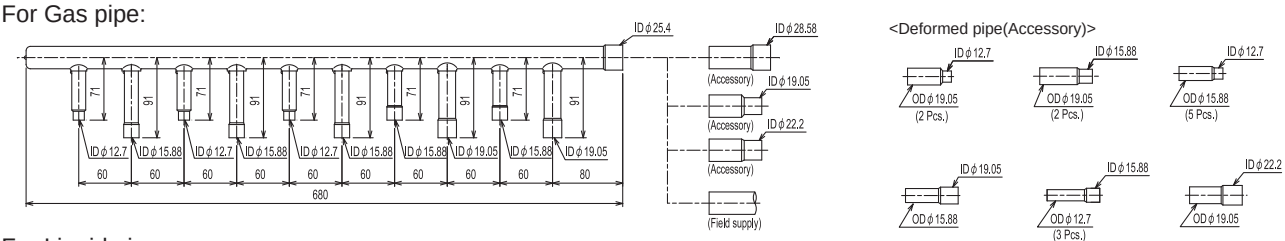

For Liquid pipe:

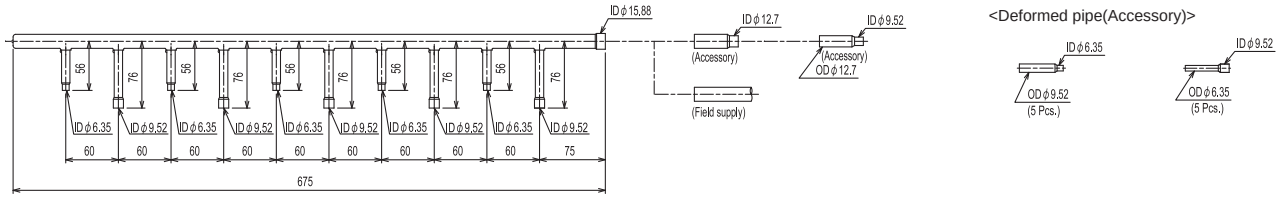

ID: Inner Diameter OD: Outer Diameter
NOTE: Besides above mentioned accessories, caps for pipe of φ6.35, φ9.52, φ12.7, φ15.88 (each diameter 2 pieces) and 1 cap for pipe of φ19.05 are included in the Header set.

7-3. OUTDOOR TWINNING KIT

For PUHY-HP-YSHM, following optional Outdoor Twinning Kit is needed to use to combine to refrigerant flows of its PUHY-HP-YHM. Details of selecting the proper kit should be referred to the System Design Section.

CMY-Y100VBK2

mm

For Gas pipe:

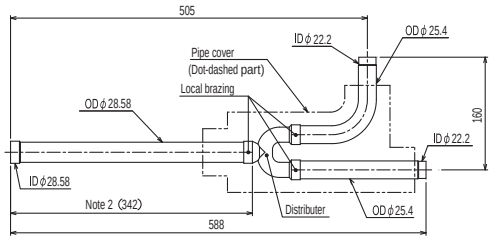

For Liquid pipe:

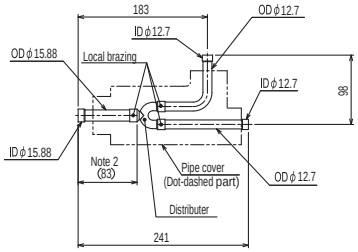

<Deformed pipe(Accessory)>

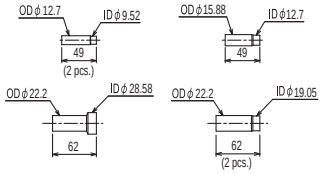

ID: Inner Diameter OD: Outer Diameter

Note 1. Reference the attitude angle of the branch pipe below the fig.

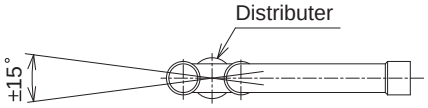

The angle of the branch pipe is within ±15° against the horizontal plane.

2. Use the attached pipe to braze the port-opening of the distributer.
3. Pipe diameter is indicated by inside diameter.

HP

OUTDOOR UNITS

1. SPECIFICATIONS ..... 2 - 152
2. EXTERNAL DIMENSIONS ..... 2 - 163
3. CENTER OF GRAVITY ..... 2 - 170
4. ELECTRICAL WIRING DIAGRAMS ..... 2 - 171
5. SOUND LEVELS ..... 2 - 172
6. CAPACITY TABLES ..... 2 - 177
   6-1. Correction by temperature ..... 2 - 177
   6-2. Correction by total indoor ..... 2 - 181
   6-3. Correction by refrigerant piping length ..... 2 - 185
   6-4. Correction by port counts of the BC controller ..... 2 - 188
   6-5. Correction at frost and defrost ..... 2 - 188
   6-6. Operation temperature range ..... 2 - 189
7. OPTIONAL PARTS ..... 2 - 190
   7-1. JOINT ..... 2 - 190
   7-2. OUTDOOR TWINNING KIT ..... 2 - 191
   7-3. JOINT KIT CMY-R160-J1 FOR BC CONTROLLER ..... 2 - 192

Model			PURY-P200YHM-A(-BS)	PURY-P250YHM-A(-BS)
Power source			3-phase 4-wire 380-400-415V 50/60Hz	
Cooling capacity (Nominal)	*1	kW	22.4	28.0
	*1	kcal / h	19,300	24,100
	*1	Btu / h	76,400	95,500
	*2	kcal / h	20,000	25,000
	Power input	kW	5.77	7.73
	Current input	A	9.7-9.2-8.9	13.0-12.3-11.9
	COP	kW / kW	3.88	3.62
Temp. range of cooling *4	Indoor	W.B.	15 to 24degC(59 to 75degF)	
	Outdoor	D.B.	-5 to 43degC(23 to 109degF)	
Heating capacity (Nominal)	*3	kW	25.0	31.5
	*3	kcal / h	21,500	27,100
	*3	Btu / h	85,300	107,500
	Power input	kW	6.14	7.83
	Current input	A	10.3-9.8-9.4	13.2-12.5-12.1
	COP	kW / kW	4.07	4.02
Temp. range of heating *4	Indoor temp.	D.B.	15 to 27degC(59 to 81degF)	
	Outdoor temp.	W.B.	-20 to 15.5degC(-4 to 60degF)	
Indoor unit connectable	Total capacity		50 to 150 % of outdoor unit capacity	
	Model / Quantity		P15 to P250 / 1 to 20	P15 to P250 / 1 to 25
Sound pressure level (measured in anechoic room)		dB <A>	56.0	57.0
Diameter of refrigerant pipe	High pressure	mm(in.)	15.88(5/8) Brazed	19.05(3/4) Brazed
	Low pressure	mm(in.)	19.05(3/4) Brazed	22.22(7/8) Brazed
External finish			Pre-coated galvanized steel sheet (+powder coating for -BS type) <MUNSELL 5Y 8/1>	
External dimension HxWxD		mm	1,710(1,650 without legs) x 920 x 760	
		in.	67-3/8(65 without legs) x 36-1/4 x 29-15/16	
Net weight		kg(lb)	220(486)	235(519)
Heat exchanger			Salt-resistant cross fin & copper tube	
Compressor	Type		Inverter scroll hermetic compressor	
	Manufacture		AC&R Works, MITSUBISHI ELECTRIC CORPORATION	
	Starting method		Inverter	
	Motor output	kW	5.4	6.7
	Case heater	kW	0.035(240 V)	
	Lubricant		MEL32	
FAN	Air flow rate	m^3 / min	185	
		L/s	3,083	
		cfm	6,532	
	External static press.	*5	0 Pa (0 mmH_2O)	
	Type x Quantity		Propeller fan x 1	
	Control, Driving mechanism		Inverter-control, Direct-driven by motor	
	Motor output	kW	0.92	
HIC circuit (HIC: Heat Inter-Changer)			-	
Protection	High pressure protection		High pressure sensor, High pressure switch at 4.15MPa (601 psi)	
	Inverter circuit (COMP. / FAN)		Over-heat protection, Over-current protection	
	Compressor		Over-heat protection	
	Fan motor		Thermal switch	
Defrosting method			Auto-defrost mode (Reversed refrigerant circle)	
Refrigerant	Type x original charge		R410A x 8.0kg (18lb)	R410A x 10.5kg (24lb)
	Control		Indoor LEV and BC controller	
Drawing	External		WKB94G529	
	Wiring		WKE94C141	
Standard attachment	Document		Installation Manual	
	Accessory		Details refer to External Drw	
Optional parts			joint: CMY-Y102S-G2, CMY-Y102L-G2, CMY-R160-J1 BC controller: CMB-P104, 105, 106, 108, 1010, 1013, 1016V-G1 Main BC controller: CMB-P108, 1010, 1013, 1016V-GA1 Sub BC controller: CMB-P104, 108V-GB1, CMB-P1016V-HB1	
Remarks			* Details on foundation work, duct work, insulation work, electrical wiring, power source switch, and other items shall be referred to the Installation Manual. * Due to continuing improvement, above specifications may be subject to change without notice.	

Notes :

	*1 Nominal cooling conditions	*2 Nominal cooling conditions	*3 Nominal heating conditions
Indoor :	27degCDB/19degCWB (81degFDB/66degFWB)	27degCDB/19.5degCWB (81degFDB/67degFWB)	20degCDB (68degFDB)
Outdoor :	35degCDB (95degFDB)	35degCDB (95degFDB)	7degCDB/6degCWB (45degFDB/43degFWB)
Pipe length :	7.5m(24-9/16ft.)	5m(16-3/8ft.)	7.5m(24-9/16ft.)
Level difference :	0m(0ft.)	0m(0ft.)	0m(0ft.)

*4 -5degC(23degF)DB/-6degC(21degF)WB to 21degC(70degF)DB/15.5degC(60degF)WB with cooling/heating mixed operation.

* Nominal condition *1, *3 are subject to JIS B8615-1

*5 External static pressure option is available (30Pa, 60Pa/3.1mmH_2O, 6.1mmH_2O)

Unit converter

kcal	=kW x 860
Btu/h	=kW x 3,412
cfm	=m^3/min x 35.31
lb	=kg / 0.4536

*Above specification data is subject to rounding variation.

R2

1. SPECIFICATIONS

Model			PURY-P300YHM-A(-BS)	PURY-P350YHM-A(-BS)
Power source			3-phase 4-wire 380-400-415V 50/60Hz	
Cooling capacity (Nominal)	*1	kW	33.5	40.0
	*1	kcal / h	28,800	34,400
	*1	Btu / h	114,300	136,500
	*2	kcal / h	30,000	35,000
	Power input	kW	9.25	12.47
	Current input	A	15.6-14.8-14.2	21.0-19.9-19.2
	COP	kW / kW	3.62	3.20
Temp. range of cooling *4	Indoor	W.B.	15 to 24degC(59 to 75degF)	
	Outdoor	D.B.	-5 to 43degC(23 to 109degF)	
Heating capacity (Nominal)	*3	kW	37.5	45.0
	*3	kcal / h	32,300	38,700
	*3	Btu / h	128,000	153,500
	Power input	kW	9.58	12.47
	Current input	A	16.1-15.3-14.8	21.0-19.9-19.2
	COP	kW / kW	3.91	3.60
Temp. range of heating *4	Indoor temp.	D.B.	15 to 27degC(59 to 81degF)	
	Outdoor temp.	W.B.	-20 to 15.5degC(-4 to 60degF)	
Indoor unit connectable	Total capacity		50 to 150 % of outdoor unit capacity	
	Model / Quantity		P15 to P250 / 1 to 30	P15 to P250 / 1 to 35
Sound pressure level (measured in anechoic room)		dB <A>	59.0	60.0
Diameter of refrigerant pipe	High pressure	mm(in.)	19.05(3/4) Brazed	
	Low pressure	mm(in.)	22.22(7/8) Brazed	28.58(1-1/8) Brazed
External finish			Pre-coated galvanized steel sheet (+powder coating for -BS type) <MUNSELL 5Y 8/1>	
External dimension HxWxD		mm	1,710(1,650 without legs) x 920 x 760	1,710(1,650 without legs) x 1,220 x 760
		in.	67-3/8(65 without legs) x 36-1/4 x 29-15/16	67-3/8(65 without legs) x 48-1/16 x 29-15/16
Net weight		kg(lb)	240(530)	265(585)
Heat exchanger			Salt-resistant cross fin & copper tube	
Compressor	Type		Inverter scroll hermetic compressor	
	Manufacture		AC&R Works, MITSUBISHI ELECTRIC CORPORATION	
	Starting method		Inverter	
	Motor output	kW	8.2	10.3
	Case heater	kW	0.045(240 V)	
	Lubricant		MEL32	
FAN	Air flow rate	m^3 / min	185	225
		L/s	3,083	3,750
		cfm	6,532	7,945
	External static press.	*5	0 Pa (0 mmH_2O)	
	Type x Quantity		Propeller fan x 1	
	Control, Driving mechanism		Inverter-control, Direct-driven by motor	
	Motor output	kW	0.92	
HIC circuit (HIC: Heat Inter-Changer)			-	
Protection	High pressure protection		High pressure sensor, High pressure switch at 4.15MPa (601 psi)	
	Inverter circuit (COMP. / FAN)		Over-heat protection, Over-current protection	
	Compressor		Over-heat protection	
	Fan motor		Thermal switch	
Defrosting method			Auto-defrost mode (Reversed refrigerant circle)	
Refrigerant	Type x original charge		R410A x 10.5kg (24lb)	R410A x 13.0kg (29lb)
	Control		Indoor LEV and BC controller	
Drawing	External		WKB94G529	WKB94G530
	Wiring		WKE94C141	
Standard attachment	Document		Installation Manual	
	Accessory		Details refer to External Drw	
Optional parts			joint: CMY-Y102S-G2, CMY-Y102L-G2, CMY-Y202-G2, CMY-R160-J1 BC controller: CMB-P104, 105, 106, 108, 1010, 1013, 1016V-G1 Main BC controller: CMB-P108, 1010, 1013, 1016V-GA1 Sub BC controller: CMB-P104, 108V-GB1, CMB-P1016V-HB1	
Remarks			* Details on foundation work, duct work, insulation work, electrical wiring, power source switch, and other items shall be referred to the Installation Manual. * Due to continuing improvement, above specifications may be subject to change without notice.	

Notes :

	*1 Nominal cooling conditions	*2 Nominal cooling conditions	*3 Nominal heating conditions
Indoor :	27degCDB/19degCWB (81degFDB/66degFWB)	27degCDB/19.5degCWB (81degFDB/67degFWB)	20degCDB (68degFDB)
Outdoor :	35degCDB (95degFDB)	35degCDB (95degFDB)	7degCDB/6degCWB (45degFDB/43degFWB)
Pipe length :	7.5m(24-9/16ft.)	5m(16-3/8ft.)	7.5m(24-9/16ft.)
Level difference :	0m(0ft.)	0m(0ft.)	0m(0ft.)

*4 -5degC(23degF)DB/-6degC(21degF)WB to 21degC(70degF)DB/15.5degC(60degF)WB with cooling/heating mixed operation.

* Nominal condition *1, *3 are subject to JIS B8615-1

*5 External static pressure option is available (30Pa, 60Pa/3.1mmH_2O, 6.1mmH_2O)

Unit converter

kcal	=kW x 860
Btu/h	=kW x 3,412
cfm	=m^3/min x 35.31
lb	=kg / 0.4536

*Above specification data is subject to rounding variation.

R2

Model			PURY-P400YHM-A(-BS)
Power source			3-phase 4-wire 380-400-415V 50/60Hz
Cooling capacity (Nominal)	*1	kW	45.0
	*1	kcal / h	38,700
	*1	Btu / h	153,500
	*2	kcal / h	40,000
	Power input	kW	13.74
	Current input	A	23.1-22.0-21.2
	COP	kW / kW	3.27
Temp. range of cooling *4	Indoor	W.B.	15 to 24degC(59 to 75degF)
	Outdoor	D.B.	-5 to 43degC(23 to 109degF)
Heating capacity (Nominal)	*3	kW	50.0
	*3	kcal / h	43,000
	*3	Btu / h	170,600
	Power input	kW	13.71
	Current input	A	23.1-21.9-21.1
	COP	kW / kW	3.64
Temp. range of heating *4	Indoor temp.	D.B.	15 to 27degC(59 to 81degF)
	Outdoor temp.	W.B.	-20 to 15.5degC(-4 to 60degF)
Indoor unit connectable	Total capacity		50 to 150 % of outdoor unit capacity
	Model / Quantity		P15 to P250 / 1 to 40
Sound pressure level (measured in anechoic room)		dB <A>	61.0
Diameter of refrigerant pipe	High pressure	mm(in.)	22.22(7/8) Brazed
	Low pressure	mm(in.)	28.58(1-1/8) Brazed
External finish			Pre-coated galvanized steel sheet (+powder coating for -BS type) <MUNSELL 5Y 8/1>
External dimension HxWxD		mm	1,710(1,650 without legs) x 1,220 x 760
		in.	67-3/8(65 without legs) x 48-1/16 x 29-15/16
Net weight		kg(lb)	265(585)
Heat exchanger			Salt-resistant cross fin & copper tube
Compressor	Type		Inverter scroll hermetic compressor
	Manufacture		AC&R Works, MITSUBISHI ELECTRIC CORPORATION
	Starting method		Inverter
	Motor output	kW	10.5
	Case heater	kW	0.045(240 V)
	Lubricant		MEL32
FAN	Air flow rate	m^3 / min	225
		L/s	3,750
		cfm	7,945
	External static press.	*5	0 Pa (0 mmH_2O)
	Type x Quantity		Propeller fan x 1
	Control, Driving mechanism		Inverter-control, Direct-driven by motor
	Motor output	kW	0.92
HIC circuit (HIC: Heat Inter-Changer)			-
Protection	High pressure protection		High pressure sensor, High pressure switch at 4.15MPa (601 psi)
	Inverter circuit (COMP. / FAN)		Over-heat protection, Over-current protection
	Compressor		Over-heat protection
	Fan motor		Thermal switch
Defrosting method			Auto-defrost mode (Reversed refrigerant circle)
Refrigerant	Type x original charge		R410A x 13.0kg (29lb)
	Control		Indoor LEV and BC controller
Drawing	External		WKB94G530
	Wiring		WKE94C141
Standard attachment	Document		Installation Manual
	Accessory		Details refer to External Drw
Optional parts			joint: CMY-Y102S-G2, CMY-Y102L-G2, CMY-Y202-G2, CMY-R160-J1 Main BC controller: CMB-P108, 1010, 1013, 1016V-GA1 Sub BC controller: CMB-P104, 108V-GB1, CMB-P1016V-HB1
Remarks			* Details on foundation work, duct work, insulation work, electrical wiring, power source switch, and other items shall be referred to the Installation Manual. * Due to continuing improvement, above specifications may be subject to change without notice.

Notes :	*1 Nominal cooling conditions	*2 Nominal cooling conditions	*3 Nominal heating conditions
Indoor :	27degCDB/19degCWB (81degFDB/66degFWB)	27degCDB/19.5degCWB (81degFDB/67degFWB)	20degCDB (68degFDB)
Outdoor :	35degCDB (95degFDB)	35degCDB (95degFDB)	7degCDB/6degCWB (45degFDB/43degFWB)
Pipe length :	7.5m(24-9/16ft.)	5m(16-3/8ft.)	7.5m(24-9/16ft.)
Level difference :	0m(0ft.)	0m(0ft.)	0m(0ft.)

*4 -5degC(23degF)DB/-6degC(21degF)WB to 21degC(70degF)DB/15.5degC(60degF)WB with cooling/heating mixed operation.

* Nominal condition *1, *3 are subject to JIS B8615-1

*5 External static pressure option is available (30Pa, 60Pa/3.1mmH_2O, 6.1mmH_2O)

Unit converter	
kcal	=kW x 860
Btu/h	=kW x 3,412
cfm	=m^3/min x 35.31
lb	=kg / 0.4536

*Above specification data is subject to rounding variation.

R2

Model			PURY-P450YSHM-A(-BS)
Power source			3-phase 4-wire 380-400-415V 50/60Hz
Cooling capacity (Nominal)	*1	kW	50.0
	*1	kcal / h	43,000
	*1	Btu / h	170,600
	*2	kcal / h	45,000
	Power input	kW	14.14
	Current input	A	23.8-22.6-21.8
	COP	kW / kW	3.53
Temp. range of cooling *4	Indoor	W.B.	15 to 24degC(59 to 75degF)
	Outdoor	D.B.	-5 to 43degC(23 to 109degF)
Heating capacity (Nominal)	*3	kW	56.0
	*3	kcal / h	48,200
	*3	Btu / h	191,100
	Power input	kW	14.71
	Current input	A	24.8-23.5-22.7
	COP	kW / kW	3.80
Temp. range of heating *4	Indoor temp.	D.B.	15 to 27degC(59 to 81degF)
	Outdoor temp.	W.B.	-20 to 15.5degC(-4 to 60degF)
Indoor unit connectable	Total capacity		50 to 150 % of outdoor unit capacity
	Model / Quantity		P15 to P250 / 1 to 45
Sound pressure level (measured in anechoic room)		dB <A>	60.0
Diameter of refrigerant pipe	High pressure	mm(in.)	22.22(7/8) Brazed
	Low pressure	mm(in.)	28.58(1-1/8) Brazed

Set Model

Model			PURY-P200YHM-A(-BS)	PURY-P250YHM-A(-BS)
External finish			Pre-coated galvanized steel sheet (+powder coating for -BS type) <MUNSELL 5Y 8/1>	Pre-coated galvanized steel sheet (+powder coating for -BS type) <MUNSELL 5Y 8/1>
External dimension HxWxD		mm	1,710(1,650 without legs) x 920 x 760	1,710(1,650 without legs) x 920 x 760
		in.	67-3/8(65 without legs) x 36-1/4 x 29-15/16	67-3/8(65 without legs) x 36-1/4 x 29-15/16
Net weight		kg(lb)	220(486)	235(519)
Heat exchanger			Salt-resistant cross fin & copper tube	Salt-resistant cross fin & copper tube
Compressor	Type		Inverter scroll hermetic compressor	Inverter scroll hermetic compressor
	Manufacture		AC&R Works, MITSUBISHI ELECTRIC CORPORATION	AC&R Works, MITSUBISHI ELECTRIC CORPORATION
	Starting method		Inverter	Inverter
	Motor output	kW	5.4	6.7
	Case heater	kW	0.035(240 V)	0.035(240 V)
	Lubricant		MEL32	MEL32
FAN	Air flow rate	m^3 / min	185	185
		L/s	3,083	3,083
		cfm	6,532	6,532
	External static	*5	0 Pa (0 mmH_2O)	0 Pa (0 mmH_2O)
	Type x Quantity		Propeller fan x 1	Propeller fan x 1
	Control, Driving mechanism		Inverter-control, Direct-driven by motor	Inverter-control, Direct-driven by motor
	Motor output	kW	0.92	0.92
HIC circuit (HIC: Heat Inter-Changer)			-	-
Protection	High pressure protection		High pressure sensor, High pressure switch at 4.15MPa (601 psi)	High pressure sensor, High pressure switch at 4.15MPa (601 psi)
	Inverter circuit (COMP. / FAN)		Over-heat protection, Over-current protection	Over-heat protection, Over-current protection
	Compressor		Over-heat protection	Over-heat protection
	Fan motor		Thermal switch	Thermal switch
Defrosting method			Auto-defrost mode (Reversed refrigerant circle)	
Refrigerant	Type x original charge		R410A x 8.0kg (18lb)	R410A x 10.5kg (24lb)
	Control		Indoor LEV and BC controller	
Pipe between unit and distributor	High pressure	mm(in.)	15.88(5/8)Brazed	19.05(3/4)Brazed
	Low pressure	mm(in.)	19.05(3/4)Brazed	22.22(7/8)Brazed
Drawing	External		WKB94G549	
	Wiring		WKE94C141	
Standard attachment	Document		Installation Manual	
	Accessory		Details refer to External Drw	
Optional parts			Outdoor Twinning kit: CMY-R100VBK joint: CMY-Y102S-G2, CMY-Y102L-G2, CMY-Y202-G2, CMY-R160-J1 Main BC controller: CMB-P108, 1010, 1013, 1016V-GA1 Sub BC controller: CMB-P104, 108V-GB1, CMB-P1016V-HB1	
Remarks			* Details on foundation work, duct work, insulation work, electrical wiring, power source switch, and other items shall be referred to the Installation Manual. * Systems with considerably long pipe runs, in heating mode, may be subject to slightly louder than normal noise from the outdoor unit/s. * The outdoor twinning kit(low pressure) should be connected to the low pressure side of the outdoor unit. If the connected units are of different capacities, the outdoor twinning kit(low pressure) should be installed in the unit with the largest capacity. * Due to continuing improvement, above specifications may be subject to change without notice.	

Notes :

	*1 Nominal cooling conditions	*2 Nominal cooling conditions	*3 Nominal heating conditions
Indoor :	27degCDB/19degCWB (81degFDB/66degFWB)	27degCDB/19.5degCWB (81degFDB/67degFWB)	20degCDB (68degFDB)
Outdoor :	35degCDB (95degFDB)	35degCDB (95degFDB)	7degCDB/6degCWB (45degFDB/43degFWB)
Pipe length :	7.5m(24-9/16ft.)	5m(16-3/8ft.)	7.5m(24-9/16ft.)
Level difference :	0m(0ft.)	0m(0ft.)	0m(0ft.)

*4 -5degC(23degF)DB/-6degC(21degF)WB to 21degC(70degF)DB/15.5degC(60degF)WB with cooling/heating mixed operation.
* Nominal condition *1, *3 are subject to JIS B8615-1
*5 External static pressure option is available (30Pa, 60Pa/3.1mmH_2O, 6.1mmH_2O)

Unit converter	
kcal	=kW x 860
Btu/h	=kW x 3,412
cfm	=m^3/min x 35.31
lb	=kg / 0.4536

*Above specification data is subject to rounding variation.

R2

Model			PURY-P500YSHM-A(-BS)
Power source			3-phase 4-wire 380-400-415V 50/60Hz
Cooling capacity (Nominal)	*1	kW	56.0
	*1	kcal / h	48,200
	*1	Btu / h	191,100
	*2	kcal / h	50,000
	Power input	kW	16.75
	Current input	A	28.2-26.8-25.8
	COP	kW / kW	3.34
Temp. range of cooling *4	Indoor	W.B.	15 to 24degC(59 to 75degF)
	Outdoor	D.B.	-5 to 43degC(23 to 109degF)
Heating capacity (Nominal)	*3	kW	63.0
	*3	kcal / h	54,200
	*3	Btu / h	215,000
	Power input	kW	16.79
	Current input	A	28.3-26.9-25.9
	COP	kW / kW	3.75
Temp. range of heating *4	Indoor temp.	D.B.	15 to 27degC(59 to 81degF)
	Outdoor temp.	W.B.	-20 to 15.5degC(-4 to 60degF)
Indoor unit connectable	Total capacity		50 to 150 % of outdoor unit capacity
	Model / Quantity		P15 to P250 / 1 to 50 (Connectable branch pipe number is max. 48.)
Sound pressure level (measured in anechoic room)		dB <A>	60.0
Diameter of refrigerant pipe	High pressure	mm(in.)	22.22(7/8) Brazed
	Low pressure	mm(in.)	28.58(1-1/8) Brazed

Set Model

Model			PURY-P250YHM-A(-BS)	PURY-P250YHM-A(-BS)
External finish			Pre-coated galvanized steel sheet (+powder coating for -BS type) <MUNSELL 5Y 8/1>	Pre-coated galvanized steel sheet (+powder coating for -BS type) <MUNSELL 5Y 8/1>
External dimension HxWxD		mm	1,710(1,650 without legs) x 920 x 760	1,710(1,650 without legs) x 920 x 760
		in.	67-3/8(65 without legs) x 36-1/4 x 29-15/16	67-3/8(65 without legs) x 36-1/4 x 29-15/16
Net weight		kg(lb)	235(519)	235(519)
Heat exchanger			Salt-resistant cross fin & copper tube	Salt-resistant cross fin & copper tube
Compressor	Type		Inverter scroll hermetic compressor	Inverter scroll hermetic compressor
	Manufacture		AC&R Works, MITSUBISHI ELECTRIC CORPORATION	AC&R Works, MITSUBISHI ELECTRIC CORPORATION
	Starting method		Inverter	Inverter
	Motor output	kW	6.7	6.7
	Case heater	kW	0.035(240 V)	0.035(240 V)
	Lubricant		MEL32	MEL32
FAN	Air flow rate	m^3 / min	185	185
		L/s	3,083	3,083
		cfm	6,532	6,532
	External static press.	*5	0 Pa (0 mmH_2O)	0 Pa (0 mmH_2O)
	Type x Quantity		Propeller fan x 1	Propeller fan x 1
	Control, Driving mechanism		Inverter-control, Direct-driven by motor	Inverter-control, Direct-driven by motor
	Motor output	kW	0.92	0.92
HIC circuit (HIC: Heat Inter-Changer)			-	-
Protection	High pressure protection		High pressure sensor, High pressure switch at 4.15MPa (601 psi)	High pressure sensor, High pressure switch at 4.15MPa (601 psi)
	Inverter circuit (COMP. / FAN)		Over-heat protection, Over-current protection	Over-heat protection, Over-current protection
	Compressor		Over-heat protection	Over-heat protection
	Fan motor		Thermal switch	Thermal switch
Defrosting method			Auto-defrost mode (Reversed refrigerant circle)	
Refrigerant	Type x original charge		R410A x 10.5kg (24lb)	R410A x 10.5kg (24lb)
	Control		Indoor LEV and BC controller	
Pipe between unit and distributor	High pressure	mm(in.)	19.05(3/4)Brazed	19.05(3/4)Brazed
	Low pressure	mm(in.)	22.22(7/8)Brazed	22.22(7/8)Brazed
Drawing	External		WKB94G549	
	Wiring		WKE94C141	
Standard attachment	Document		Installation Manual	
	Accessory		Details refer to External Drw	
Optional parts			Outdoor Twinning kit: CMY-R100VBK joint: CMY-Y102S-G2, CMY-Y102L-G2, CMY-Y202-G2, CMY-R160-J1 Main BC controller: CMB-P108, 1010, 1013, 1016V-GA1 Sub BC controller: CMB-P104, 108V-GB1, CMB-P1016V-HB1	
Remarks			* Details on foundation work, duct work, insulation work, electrical wiring, power source switch, and other items shall be referred to the Installation Manual. * Systems with considerably long pipe runs, in heating mode, may be subject to slightly louder than normal noise from the outdoor unit/s. * The outdoor twinning kit(low pressure) should be connected to the low pressure side of the outdoor unit. If the connected units are of different capacities, the outdoor twinning kit(low pressure) should be installed in the unit with the largest capacity. * Due to continuing improvement, above specifications may be subject to change without notice.	

Notes :	*1 Nominal cooling conditions	*2 Nominal cooling conditions	*3 Nominal heating conditions
Indoor :	27degCDB/19degCWB (81degFDB/66degFWB)	27degCDB/19.5degCWB (81degFDB/67degFWB)	20degCDB (68degFDB)
Outdoor :	35degCDB (95degFDB)	35degCDB (95degFDB)	7degCDB/6degCWB (45degFDB/43degFWB)
Pipe length :	7.5m(24-9/16ft.)	5m(16-3/8ft.)	7.5m(24-9/16ft.)
Level difference :	0m(0ft.)	0m(0ft.)	0m(0ft.)

*4 -5degC(23degF)DB/-6degC(21degF)WB to 21degC(70degF)DB/15.5degC(60degF)WB with cooling/heating mixed operation.
* Nominal condition *1, *3 are subject to JIS B8615-1
*5 External static pressure option is available (30Pa, 60Pa/3.1mmH_2O, 6.1mmH_2O)

Unit converter	
kcal	=kW x 860
Btu/h	=kW x 3,412
cfm	=m^3/min x 35.31
lb	=kg / 0.4536

*Above specification data is subject to rounding variation.

R2

Model			PURY-P550YSHM-A(-BS)
Power source			3-phase 4-wire 380-400-415V 50/60Hz
Cooling capacity (Nominal)	*1	kW	63.0
	*1	kcal / h	54,200
	*1	Btu / h	215,000
	*2	kcal / h	55,000
	Power input	kW	18.68
	Current input	A	31.5-29.9-28.8
	COP	kW / kW	3.37
Temp. range of cooling *4	Indoor	W.B.	15 to 24degC(59 to 75degF)
	Outdoor	D.B.	-5 to 43degC(23 to 109degF)
Heating capacity (Nominal)	*3	kW	69.0
	*3	kcal / h	59,300
	*3	Btu / h	235,400
	Power input	kW	18.81
	Current input	A	31.7-30.1-29.0
	COP	kW / kW	3.66
Temp. range of heating *4	Indoor temp.	D.B.	15 to 27degC(59 to 81degF)
	Outdoor temp.	W.B.	-20 to 15.5degC(-4 to 60degF)
Indoor unit connectable	Total capacity		50 to 150 % of outdoor unit capacity
	Model / Quantity		P15 to P250 / 2 to 50 (Connectable branch pipe number is max. 48.)
Sound pressure level (measured in anechoic room)		dB <A>	61.0
Diameter of refrigerant pipe	High pressure	mm(in.)	28.58(1-1/8) Brazed
	Low pressure	mm(in.)	28.58(1-1/8) Brazed

Set Model

Model			PURY-P250YHM-A(-BS)	PURY-P300YHM-A(-BS)
External finish			Pre-coated galvanized steel sheet (+powder coating for -BS type) <MUNSELL 5Y 8/1>	Pre-coated galvanized steel sheet (+powder coating for -BS type) <MUNSELL 5Y 8/1>
External dimension HxWxD		mm	1,710(1,650 without legs) x 920 x 760	1,710(1,650 without legs) x 920 x 760
		in.	67-3/8(65 without legs) x 36-1/4 x 29-15/16	67-3/8(65 without legs) x 36-1/4 x 29-15/16
Net weight		kg(lb)	235(519)	240(530)
Heat exchanger			Salt-resistant cross fin & copper tube	Salt-resistant cross fin & copper tube
Compressor	Type		Inverter scroll hermetic compressor	Inverter scroll hermetic compressor
	Manufacture		AC&R Works, MITSUBISHI ELECTRIC CORPORATION	AC&R Works, MITSUBISHI ELECTRIC CORPORATION
	Starting method		Inverter	Inverter
	Motor output	kW	6.7	8.2
	Case heater	kW	0.035(240 V)	0.045(240 V)
	Lubricant		MEL32	MEL32
FAN	Air flow rate	m^3 / min	185	185
		L/s	3,083	3,083
		cfm	6,532	6,532
	External static press. *5		0 Pa (0 mmH_2O)	0 Pa (0 mmH_2O)
	Type x Quantity		Propeller fan x 1	Propeller fan x 1
	Control, Driving mechanism		Inverter-control, Direct-driven by motor	Inverter-control, Direct-driven by motor
	Motor output	kW	0.92	0.92
HIC circuit (HIC: Heat Inter-Changer)			-	-
Protection	High pressure protection		High pressure sensor, High pressure switch at 4.15MPa (601 psi)	High pressure sensor, High pressure switch at 4.15MPa (601 psi)
	Inverter circuit (COMP. / FAN)		Over-heat protection, Over-current protection	Over-heat protection, Over-current protection
	Compressor		Over-heat protection	Over-heat protection
	Fan motor		Thermal switch	Thermal switch
Defrosting method			Auto-defrost mode (Reversed refrigerant circle)	
Refrigerant	Type x original charge		R410A x 10.5kg (24lb)	R410A x 10.5kg (24lb)
	Control		Indoor LEV and BC controller	
Pipe between unit and distributor	High pressure	mm(in.)	19.05(3/4)Brazed	19.05(3/4)Brazed
	Low pressure	mm(in.)	22.22(7/8)Brazed	22.22(7/8)Brazed
Drawing	External		WKB94G549	
	Wiring		WKE94C141	
Standard attachment	Document		Installation Manual	
	Accessory		Details refer to External Drw	
Optional parts			Outdoor Twinning kit: CMY-R100VBK joint: CMY-Y102S-G2, CMY-Y102L-G2, CMY-Y202-G2, CMY-R160-J1 Main BC controller: CMB-P108, 1010, 1013, 1016V-GA1 Sub BC controller: CMB-P104, 108V-GB1, CMB-P1016V-HB1	
Remarks			* Details on foundation work, duct work, insulation work, electrical wiring, power source switch, and other items shall be referred to the Installation Manual. * Systems with considerably long pipe runs, in heating mode, may be subject to slightly louder than normal noise from the outdoor unit/s. * The outdoor twinning kit(low pressure) should be connected to the low pressure side of the outdoor unit. If the connected units are of different capacities, the outdoor twinning kit(low pressure) should be installed in the unit with the largest capacity. * Due to continuing improvement, above specifications may be subject to change without notice.	

Notes :	*1 Nominal cooling conditions	*2 Nominal cooling conditions	*3 Nominal heating conditions
Indoor :	27degCDB/19degCWB (81degFDB/66degFWB)	27degCDB/19.5degCWB (81degFDB/67degFWB)	20degCDB (68degFDB)
Outdoor :	35degCDB (95degFDB)	35degCDB (95degFDB)	7degCDB/6degCWB (45degFDB/43degFWB)
Pipe length :	7.5m(24-9/16ft.)	5m(16-3/8ft.)	7.5m(24-9/16ft.)
Level difference :	0m(0ft.)	0m(0ft.)	0m(0ft.)

*4 -5degC(23degF)DB/-6degC(21degF)WB to 21degC(70degF)DB/15.5degC(60degF)WB with cooling/heating mixed operation.

* Nominal condition *1, *3 are subject to JIS B8615-1

*5 External static pressure option is available (30Pa, 60Pa/3.1mmH_2O, 6.1mmH_2O)

Unit converter	
kcal	=kW x 860
Btu/h	=kW x 3,412
cfm	=m^3/min x 35.31
lb	=kg / 0.4536

*Above specification data is subject to rounding variation.

R2

Model			PURY-P600YSHM-A(-BS)
Power source			3-phase 4-wire 380-400-415V 50/60Hz
Cooling capacity (Nominal)	*1	kW	69.0
	*1	kcal / h	59,300
	*1	Btu / h	235,400
	*2	kcal / h	60,000
	Power input	kW	19.64
	Current input	A	33.1-31.4-30.3
	COP	kW / kW	3.51
Temp. range of cooling *4	Indoor	W.B.	15 to 24degC(59 to 75degF)
	Outdoor	D.B.	-5 to 43degC(23 to 109degF)
Heating capacity (Nominal)	*3	kW	76.5
	*3	kcal / h	65,800
	*3	Btu / h	261,000
	Power input	kW	20.83
	Current input	A	35.1-33.4-32.1
	COP	kW / kW	3.67
Temp. range of heating *4	Indoor temp.	D.B.	15 to 27degC(59 to 81degF)
	Outdoor temp.	W.B.	-20 to 15.5degC(-4 to 60degF)
Indoor unit connectable	Total capacity		50 to 150 % of outdoor unit capacity
	Model / Quantity		P15 to P250 / 2 to 50 (Connectable branch pipe number is max. 48.)
Sound pressure level (measured in anechoic room)		dB <A>	62.0
Diameter of refrigerant pipe	High pressure	mm(in.)	28.58(1-1/8) Brazed
	Low pressure	mm(in.)	28.58(1-1/8) Brazed

Set Model

Model			PURY-P300YHM-A(-BS)	PURY-P300YHM-A(-BS)
External finish			Pre-coated galvanized steel sheet (+powder coating for -BS type) <MUNSELL 5Y 8/1>	Pre-coated galvanized steel sheet (+powder coating for -BS type) <MUNSELL 5Y 8/1>
External dimension HxWxD		mm	1,710(1,650 without legs) x 920 x 760	1,710(1,650 without legs) x 920 x 760
		in.	67-3/8(65 without legs) x 36-1/4 x 29-15/16	67-3/8(65 without legs) x 36-1/4 x 29-15/16
Net weight		kg(lb)	240(530)	240(530)
Heat exchanger			Salt-resistant cross fin & copper tube	Salt-resistant cross fin & copper tube
Compressor	Type		Inverter scroll hermetic compressor	Inverter scroll hermetic compressor
	Manufacture		AC&R Works, MITSUBISHI ELECTRIC CORPORATION	AC&R Works, MITSUBISHI ELECTRIC CORPORATION
	Starting method		Inverter	Inverter
	Motor output	kW	8.2	8.2
	Case heater	kW	0.045(240 V)	0.045(240 V)
	Lubricant		MEL32	MEL32
FAN	Air flow rate	m^3 / min	185	185
		L/s	3,083	3,083
		cfm	6,532	6,532
	External static press.	*5	0 Pa (0 mmH_2O)	0 Pa (0 mmH_2O)
	Type x Quantity		Propeller fan x 1	Propeller fan x 1
	Control, Driving mechanism		Inverter-control, Direct-driven by motor	Inverter-control, Direct-driven by motor
	Motor output	kW	0.92	0.92
HIC circuit (HIC: Heat Inter-Changer)			-	-
Protection	High pressure protection		High pressure sensor, High pressure switch at 4.15MPa (601 psi)	High pressure sensor, High pressure switch at 4.15MPa (601 psi)
	Inverter circuit (COMP. / FAN)		Over-heat protection, Over-current protection	Over-heat protection, Over-current protection
	Compressor		Over-heat protection	Over-heat protection
	Fan motor		Thermal switch	Thermal switch
Defrosting method			Auto-defrost mode (Reversed refrigerant circle)	
Refrigerant	Type x original charge		R410A x 10.5kg (24lb)	R410A x 10.5kg (24lb)
	Control		Indoor LEV and BC controller	
Pipe between unit and distributor	High pressure	mm(in.)	19.05(3/4)Brazed	19.05(3/4)Brazed
	Low pressure	mm(in.)	22.22(7/8)Brazed	22.22(7/8)Brazed
Drawing	External		WKB94G549	
	Wiring		WKE94C141	
Standard attachment	Document		Installation Manual	
	Accessory		Details refer to External Drw	
Optional parts			Outdoor Twinning kit: CMY-R100VBK joint: CMY-Y102S-G2, CMY-Y102L-G2, CMY-Y202-G2, CMY-R160-J1 Main BC controller: CMB-P108, 1010, 1013, 1016V-GA1 Sub BC controller: CMB-P104, 108V-GB1, CMB-P1016V-HB1	
Remarks			* Details on foundation work, duct work, insulation work, electrical wiring, power source switch, and other items shall be referred to the Installation Manual. * Systems with considerably long pipe runs, in heating mode, may be subject to slightly louder than normal noise from the outdoor unit/s. * The outdoor twinning kit(low pressure) should be connected to the low pressure side of the outdoor unit. If the connected units are of different capacities, the outdoor twinning kit(low pressure) should be installed in the unit with the largest capacity. * Due to continuing improvement, above specifications may be subject to change without notice.	

Notes :	*1 Nominal cooling conditions	*2 Nominal cooling conditions	*3 Nominal heating conditions
Indoor :	27degCDB/19degCWB (81degFDB/66degFWB)	27degCDB/19.5degCWB (81degFDB/67degFWB)	20degCDB (68degFDB)
Outdoor :	35degCDB (95degFDB)	35degCDB (95degFDB)	7degCDB/6degCWB (45degFDB/43degFWB)
Pipe length :	7.5m(24-9/16ft.)	5m(16-3/8ft.)	7.5m(24-9/16ft.)
Level difference :	0m(0ft.)	0m(0ft.)	0m(0ft.)

*4 -5degC(23degF)DB/-6degC(21degF)WB to 21degC(70degF)DB/15.5degC(60degF)WB with cooling/heating mixed operation.

* Nominal condition *1, *3 are subject to JIS B8615-1

*5 External static pressure option is available (30Pa, 60Pa/3.1mmH_2O, 6.1mmH_2O)

Unit converter	
kcal	=kW x 860
Btu/h	=kW x 3,412
cfm	=m^3/min x 35.31
lb	=kg / 0.4536

*Above specification data is subject to rounding variation.

R2

Model			PURY-P650YSHM-A(-BS)
Power source			3-phase 4-wire 380-400-415V 50/60Hz
Cooling capacity (Nominal)	*1	kW	73.0
	*1	kcal / h	62,800
	*1	Btu / h	249,100
	*2	kcal / h	65,000
	Power input	kW	22.80
	Current input	A	38.4-36.5-35.2
	COP	kW / kW	3.20
Temp. range of cooling *4	Indoor	W.B.	15 to 24degC(59 to 75degF)
	Outdoor	D.B.	-5 to 43degC(23 to 109degF)
Heating capacity (Nominal)	*3	kW	81.5
	*3	kcal / h	70,100
	*3	Btu / h	278,100
	Power input	kW	22.55
	Current input	A	38.0-36.1-34.8
	COP	kW / kW	3.61
Temp. range of heating *4	Indoor temp.	D.B.	15 to 27degC(59 to 81degF)
	Outdoor temp.	W.B.	-20 to 15.5degC(-4 to 60degF)
Indoor unit connectable	Total capacity		50 to 150 % of outdoor unit capacity
	Model / Quantity		P15 to P250 / 2 to 50 (Connectable branch pipe number is max. 48.)
Sound pressure level (measured in anechoic room)		dB <A>	62.5
Diameter of refrigerant pipe	High pressure	mm(in.)	28.58(1-1/8) Brazed
	Low pressure	mm(in.)	28.58(1-1/8) Brazed

Set Model

Model			PURY-P300YHM-A(-BS)	PURY-P350YHM-A(-BS)
External finish			Pre-coated galvanized steel sheet (+powder coating for -BS <MUNSELL 5Y 8/1>	Pre-coated galvanized steel sheet (+powder coating for -BS <MUNSELL 5Y 8/1>
External dimension HxWxD		mm	1,710(1,650 without legs) x 920 x 760	1,710(1,650 without legs) x 1,220 x 760
		in.	67-3/8(65 without legs) x 36-1/4 x 29-15/16	67-3/8(65 without legs) x 48-1/16 x 29-15/16
Net weight		kg(lb)	240(530)	265(585)
Heat exchanger			Salt-resistant cross fin & copper tube	Salt-resistant cross fin & copper tube
Compressor	Type		Inverter scroll hermetic compressor	Inverter scroll hermetic compressor
	Manufacture		AC&R Works, MITSUBISHI ELECTRIC CORPORATION	AC&R Works, MITSUBISHI ELECTRIC CORPORATION
	Starting method		Inverter	Inverter
	Motor output	kW	8.2	10.3
	Case heater	kW	0.045(240 V)	0.045(240 V)
	Lubricant		MEL32	MEL32
FAN	Air flow rate	m^3 / min	185	225
		L/s	3,083	3,750
		cfm	6,532	7,945
	External static press.	*5	0 Pa (0 mmH_2O)	0 Pa (0 mmH_2O)
	Type x Quantity		Propeller fan x 1	Propeller fan x 1
	Control, Driving mechanism		Inverter-control, Direct-driven by motor	Inverter-control, Direct-driven by motor
	Motor output	kW	0.92	0.92
HIC circuit (HIC: Heat Inter-Changer)			-	-
Protection	High pressure protection		High pressure sensor, High pressure switch at 4.15MPa (601	High pressure sensor, High pressure switch at 4.15MPa (601
	Inverter circuit (COMP. / FAN)		Over-heat protection, Over-current protection	Over-heat protection, Over-current protection
	Compressor		Over-heat protection	Over-heat protection
	Fan motor		Thermal switch	Thermal switch
Defrosting method			Auto-defrost mode (Reversed refrigerant circle)	
Refrigerant	Type x original charge		R410A x 10.5kg (24lb)	R410A x 13.0kg (29lb)
	Control		Indoor LEV and BC controller	
Pipe between unit and distributor	High pressure	mm(in.)	19.05(3/4)Brazed	19.05(3/4)Brazed
	Low pressure	mm(in.)	22.22(7/8)Brazed	28.58(1-1/8)Brazed
Drawing	External		WKB94G550	
	Wiring		WKE94C141	
Standard attachment	Document		Installation Manual	
	Accessory		Details refer to External Drw	
Optional parts			Outdoor Twinning kit: CMY-R100VBK joint: CMY-Y102S-G2, CMY-Y102L-G2, CMY-Y202-G2, CMY-R160-J1 Main BC controller: CMB-P108, 1010, 1013, 1016V-GA1 Sub BC controller: CMB-P104, 108V-GB1, CMB-P1016V-HB1	
Remarks			* Details on foundation work, duct work, insulation work, electrical wiring, power source switch, and other items shall be referred to the Installation Manual. * Systems with considerably long pipe runs, in heating mode, may be subject to slightly louder than normal noise from the outdoor unit/s. * The outdoor twinning kit(low pressure) should be connected to the low pressure side of the outdoor unit. If the connected units are of different capacities, the outdoor twinning kit(low pressure) should be installed in the unit with the largest capacity. * Due to continuing improvement, above specifications may be subject to change without notice.	

Notes :

	*1 Nominal cooling conditions	*2 Nominal cooling conditions	*3 Nominal heating conditions
Indoor :	27degCDB/19degCWB (81degFDB/66degFWB)	27degCDB/19.5degCWB (81degFDB/67degFWB)	20degCDB (68degFDB)
Outdoor :	35degCDB (95degFDB)	35degCDB (95degFDB)	7degCDB/6degCWB (45degFDB/43degFWB)
Pipe length :	7.5m(24-9/16ft.)	5m(16-3/8ft.)	7.5m(24-9/16ft.)
Level difference :	0m(0ft.)	0m(0ft.)	0m(0ft.)

*4 -5degC(23degF)DB/-6degC(21degF)WB to 21degC(70degF)DB/15.5degC(60degF)WB with cooling/heating mixed operation.
* Nominal condition *1, *3 are subject to JIS B8615-1
*5 External static pressure option is available (30Pa, 60Pa/3.1mmH_2O, 6.1mmH_2O)

Unit converter	
kcal	=kW x 860
Btu/h	=kW x 3,412
cfm	=m^3/min x 35.31
lb	=kg / 0.4536

*Above specification data is subject to rounding variation.

R2

Model			PURY-P700YSHM-A(-BS)
Power source			3-phase 4-wire 380-400-415V 50/60Hz
Cooling capacity (Nominal)	*1	kW	80.0
	*1	kcal / h	68,800
	*1	Btu / h	273,000
	*2	kcal / h	70,000
	Power input	kW	24.72
	Current input	A	41.7-39.6-38.2
	COP	kW / kW	3.23
Temp. range of cooling *4	Indoor	W.B.	15 to 24degC(59 to 75degF)
	Outdoor	D.B.	-5 to 43degC(23 to 109degF)
Heating capacity (Nominal)	*3	kW	88.0
	*3	kcal / h	75,700
	*3	Btu / h	300,300
	Power input	kW	24.30
	Current input	A	41.0-38.9-37.5
	COP	kW / kW	3.62
Temp. range of heating *4	Indoor temp.	D.B.	15 to 27degC(59 to 81degF)
	Outdoor temp.	W.B.	-20 to 15.5degC(-4 to 60degF)
Indoor unit connectable	Total capacity		50 to 150 % of outdoor unit capacity
	Model / Quantity		P15 to P250 / 2 to 50 (Connectable branch pipe number is max. 48.)
Sound pressure level (measured in anechoic room)		dB <A>	63.0
Diameter of refrigerant pipe	High pressure	mm(in.)	28.58(1-1/8) Brazed
	Low pressure	mm(in.)	34.92(1-3/8) Brazed

Set Model

Model			PURY-P300YHM-A(-BS)	PURY-P400YHM-A(-BS)
External finish			Pre-coated galvanized steel sheet (+powder coating for -BS type) <MUNSELL 5Y 8/1>	Pre-coated galvanized steel sheet (+powder coating for -BS type) <MUNSELL 5Y 8/1>
External dimension HxWxD		mm	1,710(1,650 without legs) x 920 x 760	1,710(1,650 without legs) x 1,220 x 760
		in.	67-3/8(65 without legs) x 36-1/4 x 29-15/16	67-3/8(65 without legs) x 48-1/16 x 29-15/16
Net weight		kg(lb)	240(530)	265(585)
Heat exchanger			Salt-resistant cross fin & copper tube	Salt-resistant cross fin & copper tube
Compressor	Type		Inverter scroll hermetic compressor	Inverter scroll hermetic compressor
	Manufacture		AC&R Works, MITSUBISHI ELECTRIC CORPORATION	AC&R Works, MITSUBISHI ELECTRIC CORPORATION
	Starting method		Inverter	Inverter
	Motor output	kW	8.2	10.5
	Case heater	kW	0.045(240 V)	0.045(240 V)
	Lubricant		MEL32	MEL32
FAN	Air flow rate	m^3 / min	185	225
		L/s	3,083	3,750
		cfm	6,532	7,945
	External static press.	*5	0 Pa (0 mmH_2O)	0 Pa (0 mmH_2O)
	Type x Quantity		Propeller fan x 1	Propeller fan x 1
	Control, Driving mechanism		Inverter-control, Direct-driven by motor	Inverter-control, Direct-driven by motor
	Motor output	kW	0.92	0.92
HIC circuit (HIC: Heat Inter-Changer)			-	-
Protection	High pressure protection		High pressure sensor, High pressure switch at 4.15MPa (601 psi)	High pressure sensor, High pressure switch at 4.15MPa (601 psi)
	Inverter circuit (COMP. / FAN)		Over-heat protection, Over-current protection	Over-heat protection, Over-current protection
	Compressor		Over-heat protection	Over-heat protection
	Fan motor		Thermal switch	Thermal switch
Defrosting method			Auto-defrost mode (Reversed refrigerant circle)	
Refrigerant	Type x original charge		R410A x 10.5kg (24lb)	R410A x 13.0kg (29lb)
	Control		Indoor LEV and BC controller	
Pipe between unit and distributor	High pressure	mm(in.)	19.05(3/4)Brazed	22.22(7/8)Brazed
	Low pressure	mm(in.)	22.22(7/8)Brazed	28.58(1-1/8)Brazed
Drawing	External		WKB94G550	
	Wiring		WKE94C141	
Standard attachment	Document		Installation Manual	
	Accessory		Details refer to External Drw	
Optional parts			Outdoor Twinning kit: CMY-R200VBK joint: CMY-Y102S-G2, CMY-Y102L-G2, CMY-Y202-G2, CMY-R160-J1 Main BC controller: CMB-P1016V-HA1 Sub BC controller: CMB-P104, 108V-GB1, CMB-P1016V-HB1	
Remarks			* Details on foundation work, duct work, insulation work, electrical wiring, power source switch, and other items shall be referred to the Installation Manual. * Systems with considerably long pipe runs, in heating mode, may be subject to slightly louder than normal noise from the outdoor unit/s. * The outdoor twinning kit(low pressure) should be connected to the low pressure side of the outdoor unit. If the connected units are of different capacities, the outdoor twinning kit(low pressure) should be installed in the unit with the largest capacity. * Due to continuing improvement, above specifications may be subject to change without notice.	

Notes :

	*1 Nominal cooling conditions	*2 Nominal cooling conditions	*3 Nominal heating conditions
Indoor :	27degCDB/19degCWB (81degFDB/66degFWB)	27degCDB/19.5degCWB (81degFDB/67degFWB)	20degCDB (68degFDB)
Outdoor :	35degCDB (95degFDB)	35degCDB (95degFDB)	7degCDB/6degCWB (45degFDB/43degFWB)
Pipe length :	7.5m(24-9/16ft.)	5m(16-3/8ft.)	7.5m(24-9/16ft.)
Level difference :	0m(0ft.)	0m(0ft.)	0m(0ft.)

*4 -5degC(23degF)DB/-6degC(21degF)WB to 21degC(70degF)DB/15.5degC(60degF)WB with cooling/heating mixed operation.

* Nominal condition *1, *3 are subject to JIS B8615-1

*5 External static pressure option is available (30Pa, 60Pa/3.1mmH_2O, 6.1mmH_2O)

Unit converter	
kcal	=kW x 860
Btu/h	=kW x 3,412
cfm	=m^3/min x 35.31
lb	=kg / 0.4536

*Above specification data is subject to rounding variation.

R2

Model			PURY-P750YSHM-A(-BS)
Power source			3-phase 4-wire 380-400-415V 50/60Hz
Cooling capacity (Nominal)	*1	kW	85.0
	*1	kcal / h	73,100
	*1	Btu / h	290,000
	*2	kcal / h	75,000
	Power input	kW	27.86
	Current input	A	47.0-44.6-43.0
	COP	kW / kW	3.05
Temp. range of cooling *4	Indoor	W.B.	15 to 24degC(59 to 75degF)
	Outdoor	D.B.	-5 to 43degC(23 to 109degF)
Heating capacity (Nominal)	*3	kW	95.0
	*3	kcal / h	81,700
	*3	Btu / h	324,100
	Power input	kW	26.36
	Current input	A	44.4-42.2-40.7
	COP	kW / kW	3.60
Temp. range of heating *4	Indoor temp.	D.B.	15 to 27degC(59 to 81degF)
	Outdoor temp.	W.B.	-20 to 15.5degC(-4 to 60degF)
Indoor unit connectable	Total capacity		50 to 150 % of outdoor unit capacity
	Model / Quantity		P15 to P250 / 2 to 50 (Connectable branch pipe number is max. 48.)
Sound pressure level (measured in anechoic room)		dB <A>	63.5
Diameter of refrigerant pipe	High pressure	mm(in.)	28.58(1-1/8) Brazed
	Low pressure	mm(in.)	34.92(1-3/8) Brazed

Set Model

Model			PURY-P350YHM-A(-BS)	PURY-P400YHM-A(-BS)
External finish			Pre-coated galvanized steel sheet (+powder coating for -BS type) <MUNSELL 5Y 8/1>	Pre-coated galvanized steel sheet (+powder coating for -BS type) <MUNSELL 5Y 8/1>
External dimension HxWxD		mm	1,710(1,650 without legs) x 1,220 x 760	1,710(1,650 without legs) x 1,220 x 760
		in.	67-3/8(65 without legs) x 48-1/16 x 29-15/16	67-3/8(65 without legs) x 48-1/16 x 29-15/16
Net weight		kg(lb)	265(585)	265(585)
Heat exchanger			Salt-resistant cross fin & copper tube	Salt-resistant cross fin & copper tube
Compressor	Type		Inverter scroll hermetic compressor	Inverter scroll hermetic compressor
	Manufacture		AC&R Works, MITSUBISHI ELECTRIC CORPORATION	AC&R Works, MITSUBISHI ELECTRIC CORPORATION
	Starting method		Inverter	Inverter
	Motor output	kW	10.3	10.5
	Case heater	kW	0.045(240 V)	0.045(240 V)
	Lubricant		MEL32	MEL32
FAN	Air flow rate	m^3 / min	225	225
		L/s	3,750	3,750
		cfm	7,945	7,945
	External static press.	*5	0 Pa (0 mmH_2O)	0 Pa (0 mmH_2O)
	Type x Quantity		Propeller fan x 1	Propeller fan x 1
	Control, Driving mechanism		Inverter-control, Direct-driven by motor	Inverter-control, Direct-driven by motor
	Motor output	kW	0.92	0.92
HIC circuit (HIC: Heat Inter-Changer)			-	-
Protection	High pressure protection		High pressure sensor, High pressure switch at 4.15MPa (601 psi)	High pressure sensor, High pressure switch at 4.15MPa (601 psi)
	Inverter circuit (COMP. / FAN)		Over-heat protection, Over-current protection	Over-heat protection, Over-current protection
	Compressor		Over-heat protection	Over-heat protection
	Fan motor		Thermal switch	Thermal switch
Defrosting method			Auto-defrost mode (Reversed refrigerant circle)	
Refrigerant	Type x original charge		R410A x 13.0kg (29lb)	R410A x 13.0kg (29lb)
	Control		Indoor LEV and BC controller	
Pipe between unit and distributor	High pressure	mm(in.)	19.05(3/4)Brazed	22.22(7/8)Brazed
	Low pressure	mm(in.)	28.58(1-1/8)Brazed	28.58(1-1/8)Brazed
Drawing	External		WKB94G551	
	Wiring		WKE94C141	
Standard attachment	Document		Installation Manual	
	Accessory		Details refer to External Drw	
Optional parts			Outdoor Twinning kit: CMY-R200VBK joint: CMY-Y102S-G2, CMY-Y102L-G2, CMY-Y202-G2, CMY-R160-J1 Main BC controller: CMB-P1016V-HA1 Sub BC controller: CMB-P104, 108V-GB1, CMB-P1016V-HB1	
Remarks			* Details on foundation work, duct work, insulation work, electrical wiring, power source switch, and other items shall be referred to the Installation Manual. * Systems with considerably long pipe runs, in heating mode, may be subject to slightly louder than normal noise from the outdoor unit/s. * The outdoor twinning kit(low pressure) should be connected to the low pressure side of the outdoor unit. If the connected units are of different capacities, the outdoor twinning kit(low pressure) should be installed in the unit with the largest capacity. * Due to continuing improvement, above specifications may be subject to change without notice.	

Notes :	*1 Nominal cooling conditions	*2 Nominal cooling conditions	*3 Nominal heating conditions
Indoor :	27degCDB/19degCWB (81degFDB/66degFWB)	27degCDB/19.5degCWB (81degFDB/67degFWB)	20degCDB (68degFDB)
Outdoor :	35degCDB (95degFDB)	35degCDB (95degFDB)	7degCDB/6degCWB (45degFDB/43degFWB)
Pipe length :	7.5m(24-9/16ft.)	5m(16-3/8ft.)	7.5m(24-9/16ft.)
Level difference :	0m(0ft.)	0m(0ft.)	0m(0ft.)

*4 -5degC(23degF)DB/-6degC(21degF)WB to 21degC(70degF)DB/15.5degC(60degF)WB with cooling/heating mixed operation.

* Nominal condition *1, *3 are subject to JIS B8615-1

*5 External static pressure option is available (30Pa, 60Pa/3.1mmH_2O, 6.1mmH_2O)

Unit converter	
kcal	=kW x 860
Btu/h	=kW x 3,412
cfm	=m^3/min x 35.31
lb	=kg / 0.4536

*Above specification data is subject to rounding variation.

R2

Model			PURY-P800YSHM-A(-BS)
Power source			3-phase 4-wire 380-400-415V 50/60Hz
Cooling capacity (Nominal)	*1	kW	90.0
	*1	kcal / h	77,400
	*1	Btu / h	307,100
	*2	kcal / h	80,000
	Power input	kW	29.75
	Current input	A	50.2-47.7-45.9
	COP	kW / kW	3.02
Temp. range of cooling *4	Indoor	W.B.	15 to 24degC(59 to 75degF)
	Outdoor	D.B.	-5 to 43degC(23 to 109degF)
Heating capacity (Nominal)	*3	kW	100.0
	*3	kcal / h	86,000
	*3	Btu / h	341,200
	Power input	kW	27.64
	Current input	A	46.6-44.3-42.7
	COP	kW / kW	3.61
Temp. range of heating *4	Indoor temp.	D.B.	15 to 27degC(59 to 81degF)
	Outdoor temp.	W.B.	-20 to 15.5degC(-4 to 60degF)
Indoor unit connectable	Total capacity		50 to 150 % of outdoor unit capacity
	Model / Quantity		P15 to P250 / 2 to 50 (Connectable branch pipe number is max. 48.)
Sound pressure level (measured in anechoic room)		dB <A>	64.0
Diameter of refrigerant pipe	High pressure	mm(in.)	28.58(1-1/8) Brazed
	Low pressure	mm(in.)	34.92(1-3/8) Brazed

Set Model

Model			PURY-P400YHM-A(-BS)	PURY-P400YHM-A(-BS)
External finish			Pre-coated galvanized steel sheet (+powder coating for -BS type) <MUNSELL 5Y 8/1>	Pre-coated galvanized steel sheet (+powder coating for -BS type) <MUNSELL 5Y 8/1>
External dimension HxWxD		mm	1,710(1,650 without legs) x 1,220 x 760	1,710(1,650 without legs) x 1,220 x 760
		in.	67-3/8(65 without legs) x 48-1/16 x 29-15/16	67-3/8(65 without legs) x 48-1/16 x 29-15/16
Net weight		kg(lb)	265(585)	265(585)
Heat exchanger			Salt-resistant cross fin & copper tube	Salt-resistant cross fin & copper tube
Compressor	Type		Inverter scroll hermetic compressor	Inverter scroll hermetic compressor
	Manufacture		AC&R Works, MITSUBISHI ELECTRIC CORPORATION	AC&R Works, MITSUBISHI ELECTRIC CORPORATION
	Starting method		Inverter	Inverter
	Motor output	kW	10.5	10.5
	Case heater	kW	0.045(240 V)	0.045(240 V)
	Lubricant		MEL32	MEL32
FAN	Air flow rate	m^3 / min	225	225
		L/s	3,750	3,750
		cfm	7,945	7,945
	External static press.	*5	0 Pa (0 mmH_2O)	0 Pa (0 mmH_2O)
	Type x Quantity		Propeller fan x 1	Propeller fan x 1
	Control, Driving mechanism		Inverter-control, Direct-driven by motor	Inverter-control, Direct-driven by motor
	Motor output	kW	0.92	0.92
HIC circuit (HIC: Heat Inter-Changer)			-	-
Protection	High pressure protection		High pressure sensor, High pressure switch at 4.15MPa (601 psi)	High pressure sensor, High pressure switch at 4.15MPa (601 psi)
	Inverter circuit (COMP. / FAN)		Over-heat protection, Over-current protection	Over-heat protection, Over-current protection
	Compressor		Over-heat protection	Over-heat protection
	Fan motor		Thermal switch	Thermal switch
Defrosting method			Auto-defrost mode (Reversed refrigerant circle)	
Refrigerant	Type x original charge		R410A x 13.0kg (29lb)	R410A x 13.0kg (29lb)
	Control		Indoor LEV and BC controller	
Pipe between unit and distributor	High pressure	mm(in.)	22.22(7/8)Brazed	22.22(7/8)Brazed
	Low pressure	mm(in.)	28.58(1-1/8)Brazed	28.58(1-1/8)Brazed
Drawing	External		WKB94G551	
	Wiring		WKE94C141	
Standard attachment	Document		Installation Manual	
	Accessory		Details refer to External Drw	
Optional parts			Outdoor Twinning kit: CMY-R200VBK joint: CMY-Y102S-G2, CMY-Y102L-G2, CMY-Y202-G2, CMY-R160-J1 Main BC controller: CMB-P1016V-HA1 Sub BC controller: CMB-P104, 108V-GB1, CMB-P1016V-HB1	
Remarks			* Details on foundation work, duct work, insulation work, electrical wiring, power source switch, and other items shall be referred to the Installation Manual. * Systems with considerably long pipe runs, in heating mode, may be subject to slightly louder than normal noise from the outdoor unit/s. * The outdoor twinning kit(low pressure) should be connected to the low pressure side of the outdoor unit. If the connected units are of different capacities, the outdoor twinning kit(low pressure) should be installed in the unit with the largest capacity. * Due to continuing improvement, above specifications may be subject to change without notice.	

Notes :

	*1 Nominal cooling conditions	*2 Nominal cooling conditions	*3 Nominal heating conditions
Indoor :	27degCDB/19degCWB (81degFDB/66degFWB)	27degCDB/19.5degCWB (81degFDB/67degFWB)	20degCDB (68degFDB)
Outdoor :	35degCDB (95degFDB)	35degCDB (95degFDB)	7degCDB/6degCWB (45degFDB/43degFWB)
Pipe length :	7.5m(24-9/16ft.)	5m(16-3/8ft.)	7.5m(24-9/16ft.)
Level difference :	0m(0ft.)	0m(0ft.)	0m(0ft.)

*4 -5degC(23degF)DB/-6degC(21degF)WB to 21degC(70degF)DB/15.5degC(60degF)WB with cooling/heating mixed operation.

* Nominal condition *1, *3 are subject to JIS B8615-1

*5 External static pressure option is available (30Pa, 60Pa/3.1mmH_2O, 6.1mmH_2O)

Unit converter

kcal	=kW x 860
Btu/h	=kW x 3,412
cfm	=m^3/min x 35.31
lb	=kg / 0.4536

*Above specification data is subject to rounding variation.

R2

PURY-P200,250,300YHM-A(-BS)

Ref. : PURY_YHM-A_EXD_EUDB_P200-P300_R1
Unit : mm

<Accessories>
● Connecting pipe
<Low pressure> • Pipe(ID Ø25.4XID Ø22.2)···P250,P300 1 pc.

Note 1. Please refer to the next page for information regarding necessary spacing around the unit and foundation work.
2. The detachable leg can be removed at site.
3. At brazing of pipes,wrap the refrigerant service valve with wet cloth and keep the temperature of refrigerant service valve under 120°C.

NO.	Usage		Specifications
①	For pipes	Front through hole	140X77 Knockout hole
②		Front through hole (Uses when twinning kit (optional parts) is mounted.)	Ø 45 Knockout hole
③	For wires	Bottom through hole	150X92 Knockout hole
④		Front through hole	Ø 65 or Ø 40 Knockout hole
⑤		Front through hole	Ø 52 or Ø 27 Knockout hole
⑥		Bottom through hole	Ø 52 Knockout hole
⑦	For transmission cables	Front through hole	Ø 34 Knockout hole

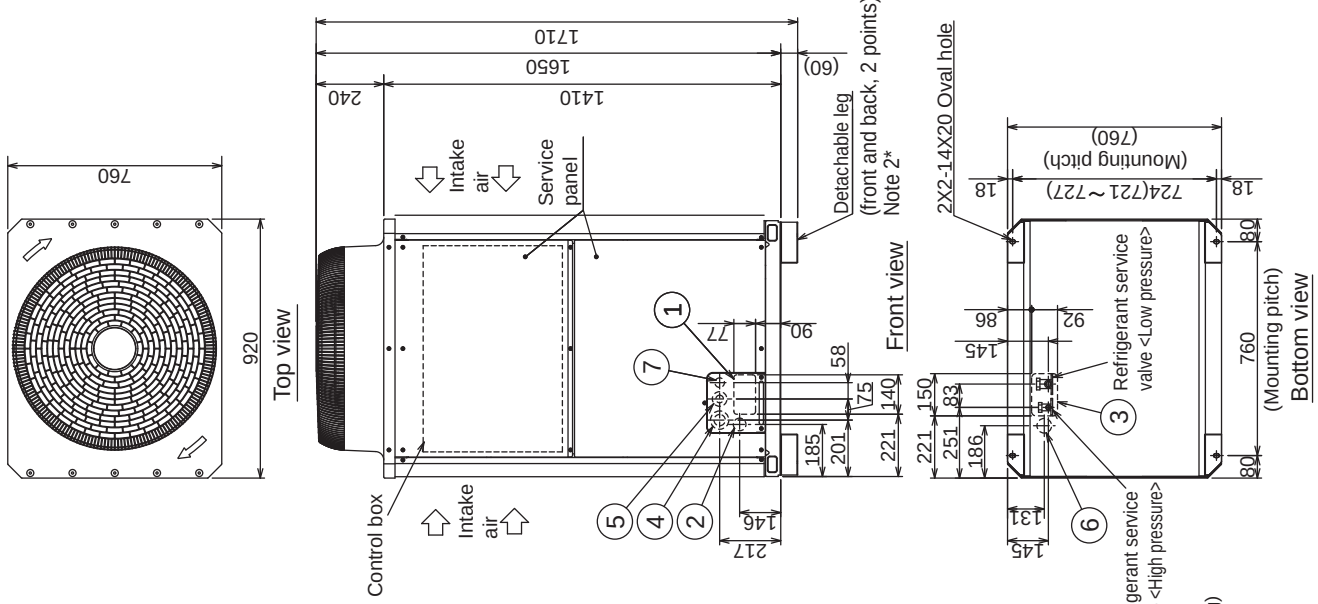

Connecting pipe specifications

Model	Position dimensions for the refrigerant service valve		Connection specifications for the refrigerant service valve	
	High pressure	Low pressure	High pressure	Low pressure
	A	B		
PURY-P200YHM	239	261	Ø15.88 Brazed*2	Ø 19.05 Brazed*2
PURY-P250YHM	261	263	Ø19.05 Brazed*2	Ø 22.2 Brazed*1
PURY-P300YHM				

*1. Connect by using the connecting pipes (for bottom piping and front piping) that are supplied.
*2. Expand the field pipes(for bottom piping and front piping) and connect directly to the valve.

R2

2. EXTERNAL DIMENSIONS

PURY-P200,250,300YHM-A(-BS)

1.Required space around the unit

● In case of single installation

① Secure enough space around the unit as shown in the figure below.

- With a space of at least 300mm to the wall on the back of the unit
- With a space of at least 100mm to the wall on the back of the unit

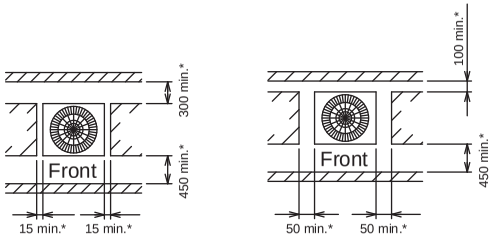

<Top view> <Top view>

<Unit:mm>

② When the height of the walls on the front,back or on the sides<H> exceeds the wall height limit as defined below add the height that exceeds the height limit <h> to the figures that are marked with an asterisk.

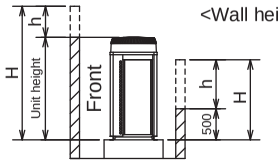

<Side view>

<Wall height limit> Front :Up to the unit height
Back :Up to 500mm from the unit bottom
Side :Up to the unit height

● In case of collective installation

① When multiple units are installed adjacent to each other, secure enough space to allow for air circulation and walkway between groups of units as shown in the figures below.
② At least two sides must be left open.
③ As with the single installation, add the height that exceeds the height limit<h> to the figures that are marked with an asterisk.

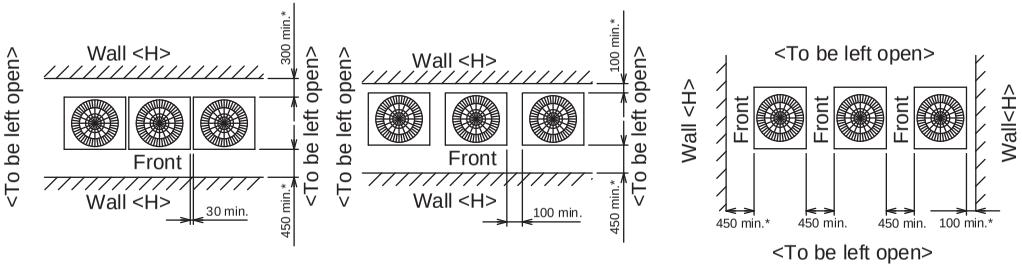

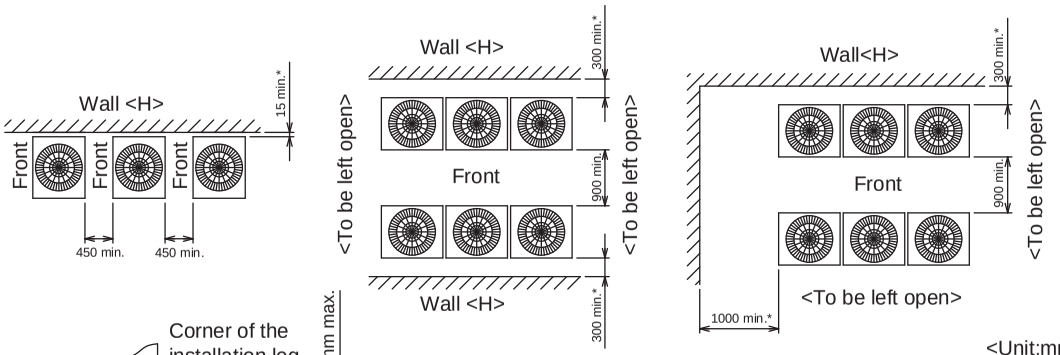

<Unit:mm>

2.Foundation work

① Take into consideration the surface strength,water drainage route, piping route,and wiring route when preparing the installation site. <Note that the drain water comes out of the unit during operation.>
② Build the foundation in such way that the corner of the installation leg is securely supported as shown in the right figure.(Fig.A,B) When using cushion pads, be sure that the full width of the unit is covered.
③ The protrusion length of the anchor bolt must not exceed 30mm.(Fig.A,B)
④ Use four fixing plates as shown in the right figure <field supply required> when using post-installed anchor bolts.(Fig.C,D)
⑤ To prevent small animals and water from entering the unit and damaging its parts, close the gap around the edges of through holes for pipes and wires with filler plates <field supply required>.
⑥ When the pipes or cables are routed at the bottom of the unit, make sure that the through hole at the base of the unit does not get blocked with the installation base.
⑦ Refer to the Installation Manual when installing units on an installation base.

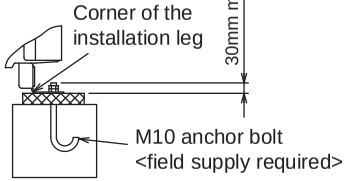

Fig.A (without detachable legs)

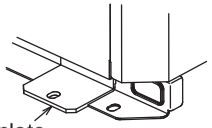

Fig.C (without detachable legs)

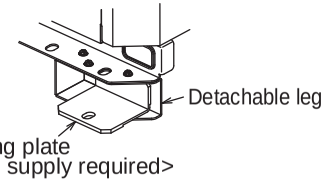

Fig.D (with detachable legs)

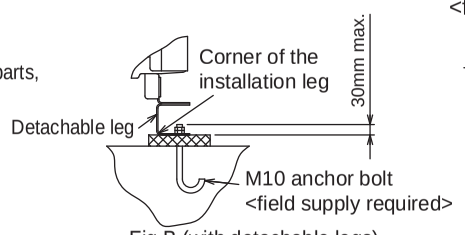

Fig.B (with detachable legs)

Ref. : PURY_YHM-A_EXD_EUDB_P200-P300_R2
Unit : mm

PURY-P350,400YHM-A(-BS)

Ref. : PURY_YHM-A_EXD_EUDB_P350-P400_R1
Unit : mm

<Accessories>
● Connecting pipe
<Low pressure> • Pipe(ID ø25.4XID ø28.58)·····P350,P400 1 pc.
<High pressure> • Pipe(ID ø25.4XOD ø19.05)·····P350 1 pc.
• Elbow(ID ø19.05XOD ø19.05)···P350 1 pc.
• Pipe(ID ø25.4XID ø22.2)·····P400 1 pc.

Note 1. Please refer to the next page for information regarding necessary spacing around the unit and foundation work.
2. The detachable leg can be removed at site.
3. At brazing of pipes,wrap the refrigerant service valve with wet cloth and keep the temperature of refrigerant service valve under 120°C.

NO.	Usage		Specifications
①	For pipes	Front through hole	140X77 Knockout hole
②		Front through hole (Uses when twinning kit (optional parts) is mounted.)	Ø 45 Knockout hole
③		Bottom through hole	150X94 Knockout hole
④	For wires	Front through hole	Ø65 or Ø40 Knockout hole
⑤		Front through hole	Ø52 or Ø27 Knockout hole
⑥		Bottom through hole	Ø 65 Knockout hole
⑦	For transmission cables	Front through hole	Ø 34 Knockout hole

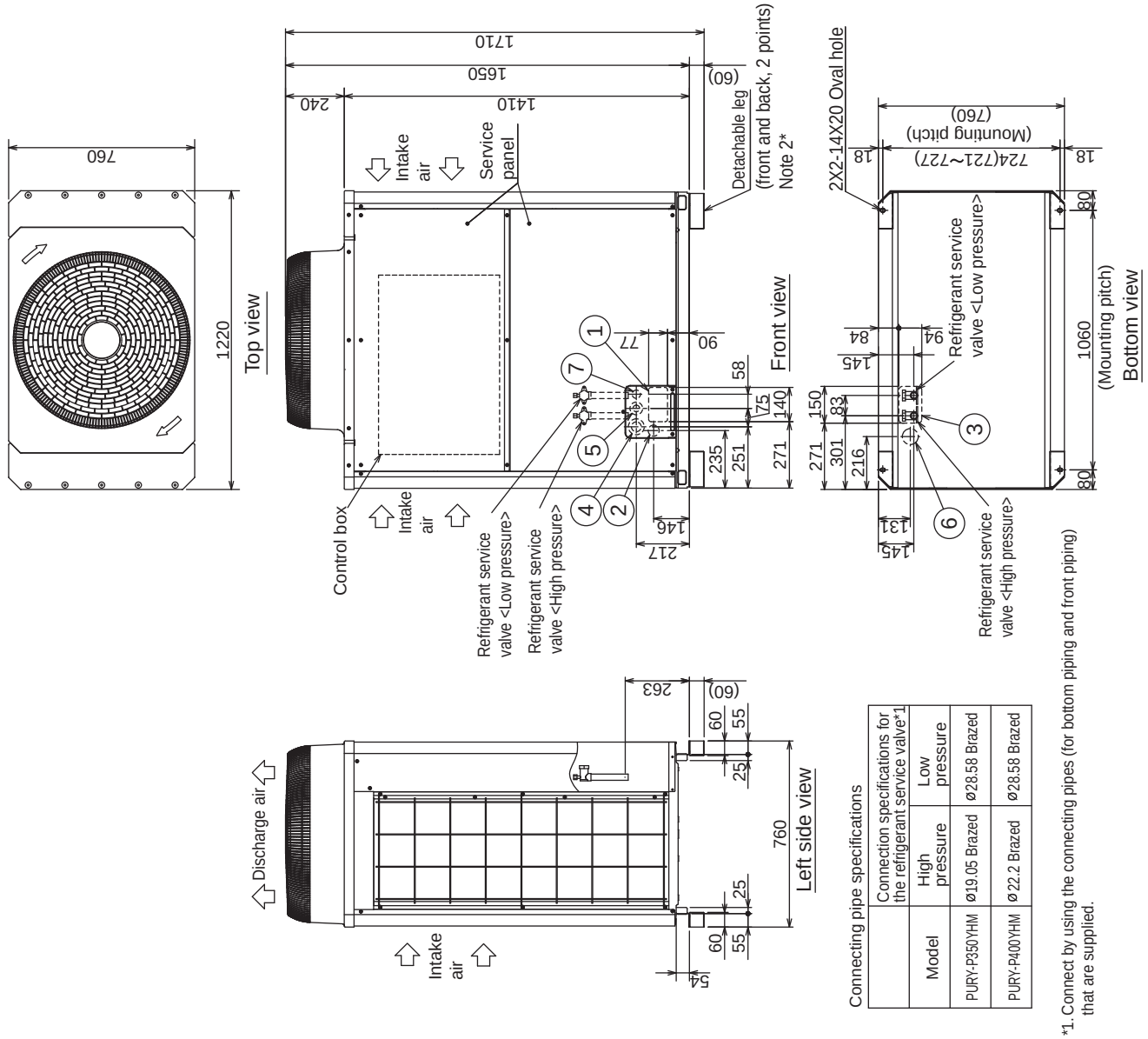

Connecting pipe specifications

Model	Connection specifications for the refrigerant service valve*1	
	High pressure	Low pressure
PURY-P350YHM	Ø19.05 Brazed	Ø28.58 Brazed
PURY-P400YHM	Ø22.2 Brazed	Ø28.58 Brazed

*1. Connect by using the connecting pipes (for bottom piping and front piping) that are supplied.

R2

R2

PURY-P350,400YHM-A(-BS)

Ref. : PURY_YHM-A_EXD_EUDB_P350-P400_R2

Unit : mm

1.Required space around the unit

● In case of single installation

① Secure enough space around the unit as shown in the figure below.

- With a space of at least 300mm to the wall on the back of the unit
- With a space of at least 100mm to the wall on the back of the unit

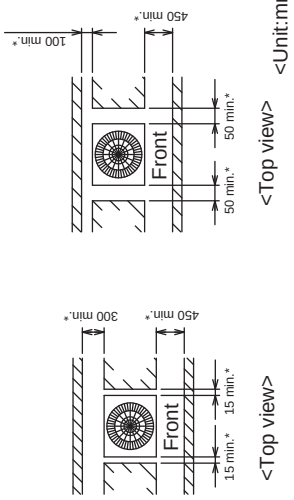

<Unit:mm>

② When the height of the walls on the front,back or on the sides<H> exceeds the wall height limit as defined below add the height that exceeds the height limit <h> to the figures that are marked with an asterisk.

<Wall height limit> Front :Up to the unit height
Back :Up to 500mm from the unit bottom
Side :Up to the unit height

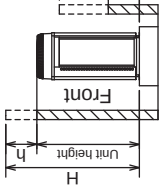

● In case of collective installation

① When multiple units are installed adjacent to each other, secure enough space to allow for air circulation and walkway between groups of units as shown in the figures below.
② At least two sides must be left open.
③ As with the single installation, add the height that exceeds the height limit<h> to the figures that are marked with an asterisk.

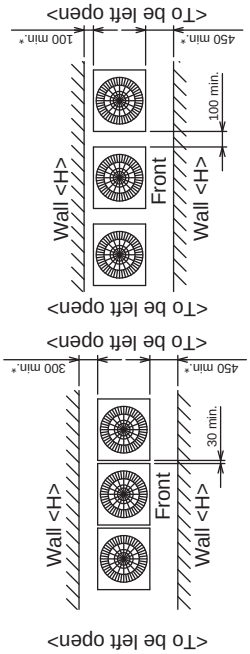

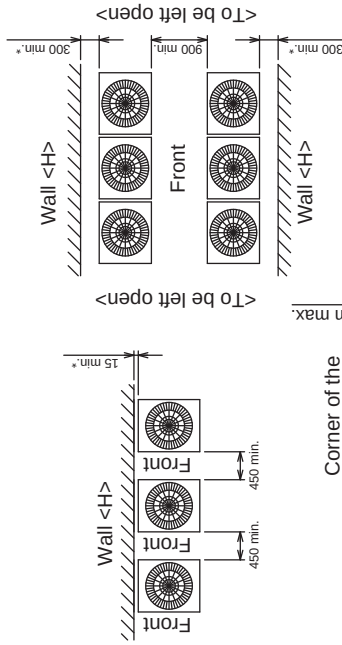

<Unit:mm>

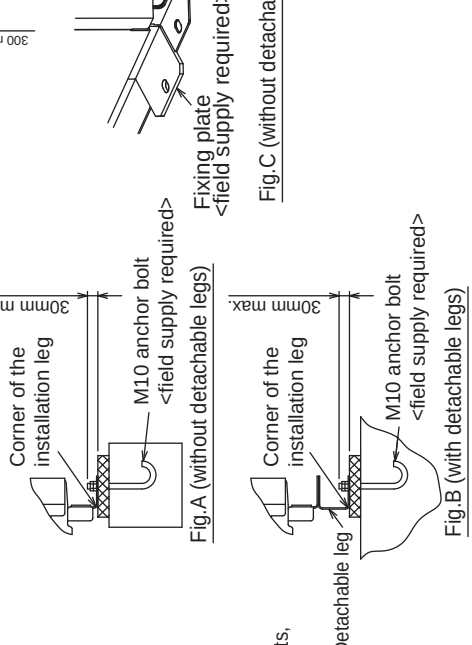

2.Foundation work

① Take into consideration the surface strength,water drainage route, piping route,and wiring route when preparing the installation site.
<Note that the drain water comes out of the unit during operation.>
② Build the foundation in such way that the corner of the installation leg is securely supported as shown in the right figure.(Fig.A,B)
When using cushion pads, be sure that the full width of the unit is covered.
③ The protrusion length of the anchor bolt must not exceed 30mm.(Fig.A,B)
④ Use four fixing plates as shown in the right figure <field supply required>
when using post-installed anchor bolts.(Fig.C,D)
⑤ To prevent small animals and water from entering the unit and damaging its parts, close the gap around the edges of through holes for pipes and wires with filler plates <field supply required>.
⑥ When the pipes or cables are routed at the bottom of the unit, make sure that the through hole at the base of the unit does not get blocked with the installation base.
⑦ Refer to the Installation Manual when installing units on an installation base.

PURY-P450,500,550,600YSHM-A(-BS)

Ref. : PURY_YHM-A_EXD_EUDB_P450-P600
Unit : mm

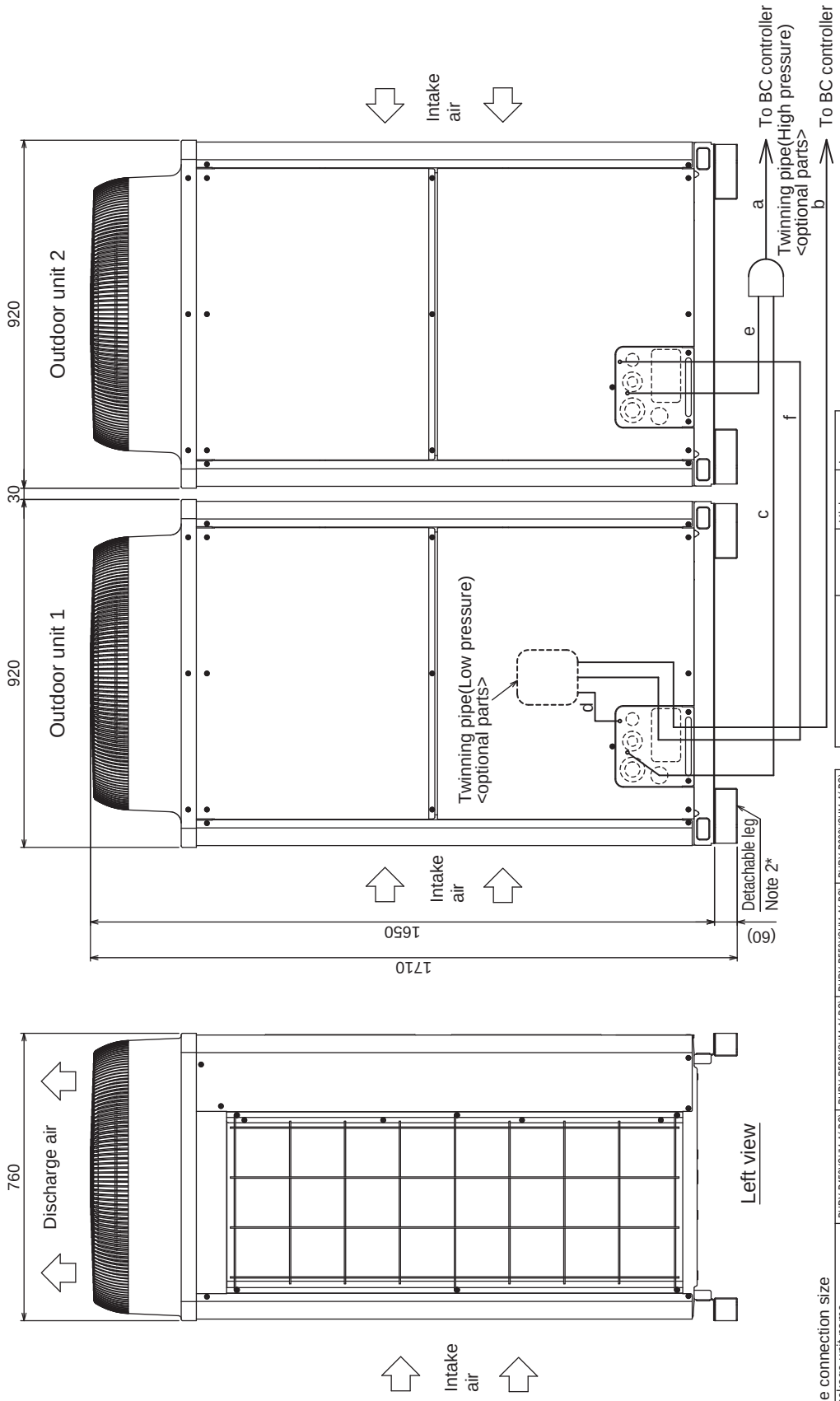

Unit model	High pressure c or e	Low pressure d or f
P200	ø15.88	ø19.05
P250	ø19.05	ø22.2
P300	ø19.05	ø22.2

Twinning pipe～Outdoor unit

Twinning pipe connection size

Package unit name			PURY-P450YSHM-A(-BS)	PURY-P500YSHM-A(-BS)	PURY-P550YSHM-A(-BS)	PURY-P600YSHM-A(-BS)
Component unit name	Outdoor unit 1		PURY-P250YHM-A(-BS)	PURY-P250YHM-A(-BS)	PURY-P300YHM-A(-BS)	PURY-P300YHM-A(-BS)
	Outdoor unit 2		PURY-P200YHM-A(-BS)	PURY-P250YHM-A(-BS)	PURY-P250YHM-A(-BS)	PURY-P300YHM-A(-BS)
Outdoor Twinning Kit(optional parts)			CMY-R100VBK			
BC controller～Twinning pipe	High pressure	a	ø22.2		ø28.58	
	Low pressure	b	ø28.58			

Note 1.Connect the pipes as shown in the figure above. Refer to the table above for the pipe size.
2.The detachable leg can be removed at site.
3.Twinning pipe (High pressure) should not be tilted more than 15 degrees from the ground.
4.See the Installation Manual for the details of Twinning pipe installation.

R2

R2

PURY-P650,700YSHM-A(-BS)

Ref. : PURY_YHM-A_EXD_EUDB_P650-P700
Unit : mm

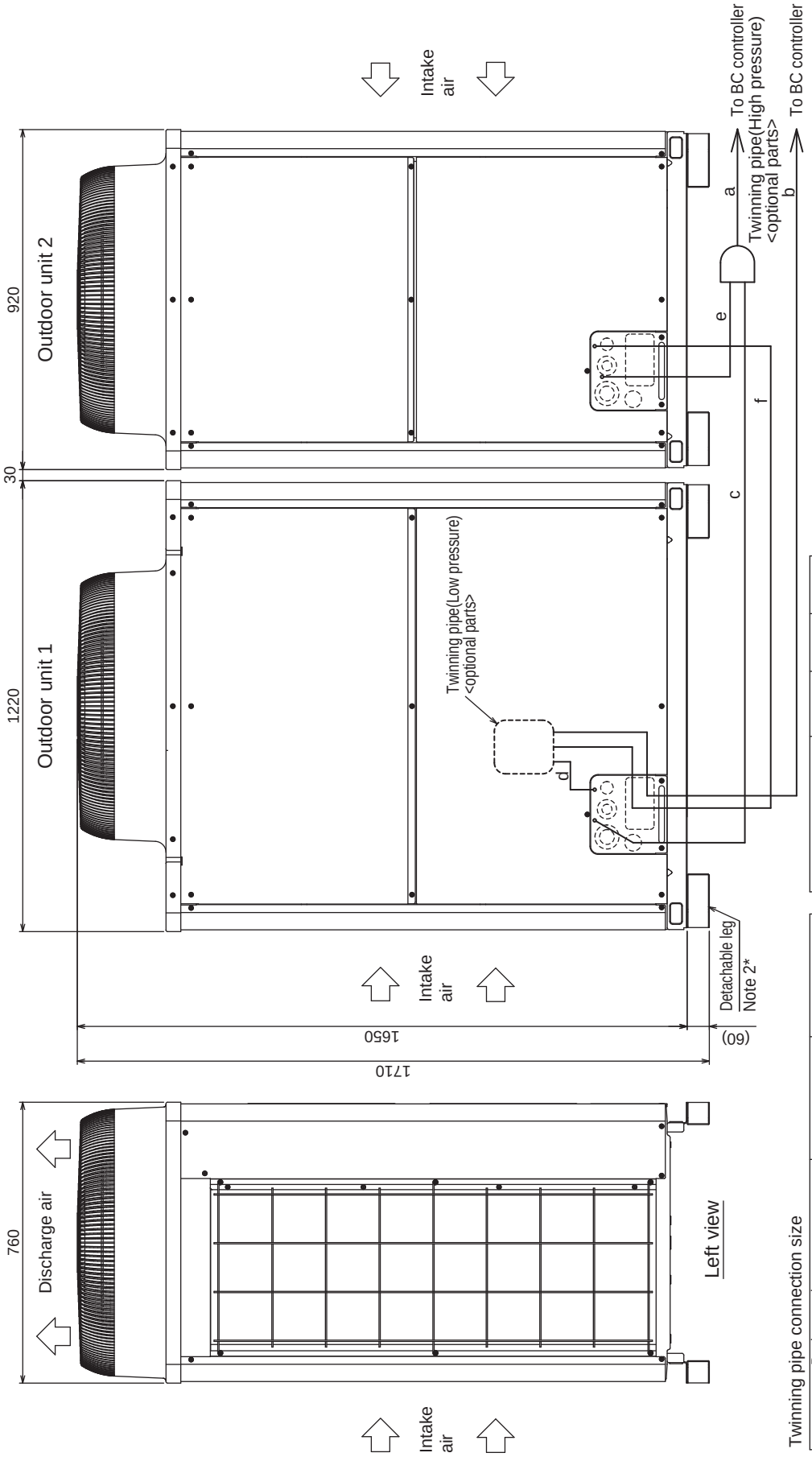

Twinning pipe connection size

Package unit name		PURY-P650YSHM-A(-BS)	PURY-P700YSHM-A(-BS)
Component unit name	Outdoor unit 1	PURY-P350YHM-A(-BS)	PURY-P400YHM-A(-BS)
	Outdoor unit 2	PURY-P300YHM-A(-BS)	PURY-P300YHM-A(-BS)
Outdoor Twinning Kit(optional parts)		CMY-R100VBK	CMY-R200VBK
BC controller ~Twinning pipe	High pressure a	ø28.58	
	Low pressure b	ø28.58	ø34.93

Twinning pipe ~Outdoor unit	Unit model	High pressure c or e	Low pressure d or f
	P300	ø19.05	ø22.2
	P350	ø19.05	ø28.58
	P400	ø22.2	ø28.58

Note 1.Connect the pipes as shown in the figure above. Refer to the table above for the pipe size.
2.The detachable leg can be removed at site.
3.Twinning pipe (High pressure) should not be tilted more than 15 degrees from the ground.
4.See the Installation Manual for the details of Twinning pipe installation.

PURY-P750,800YSHM-A(-BS)

Ref. : PURY_YHM-A_EXD_EUDB_P750-P800
Unit : mm

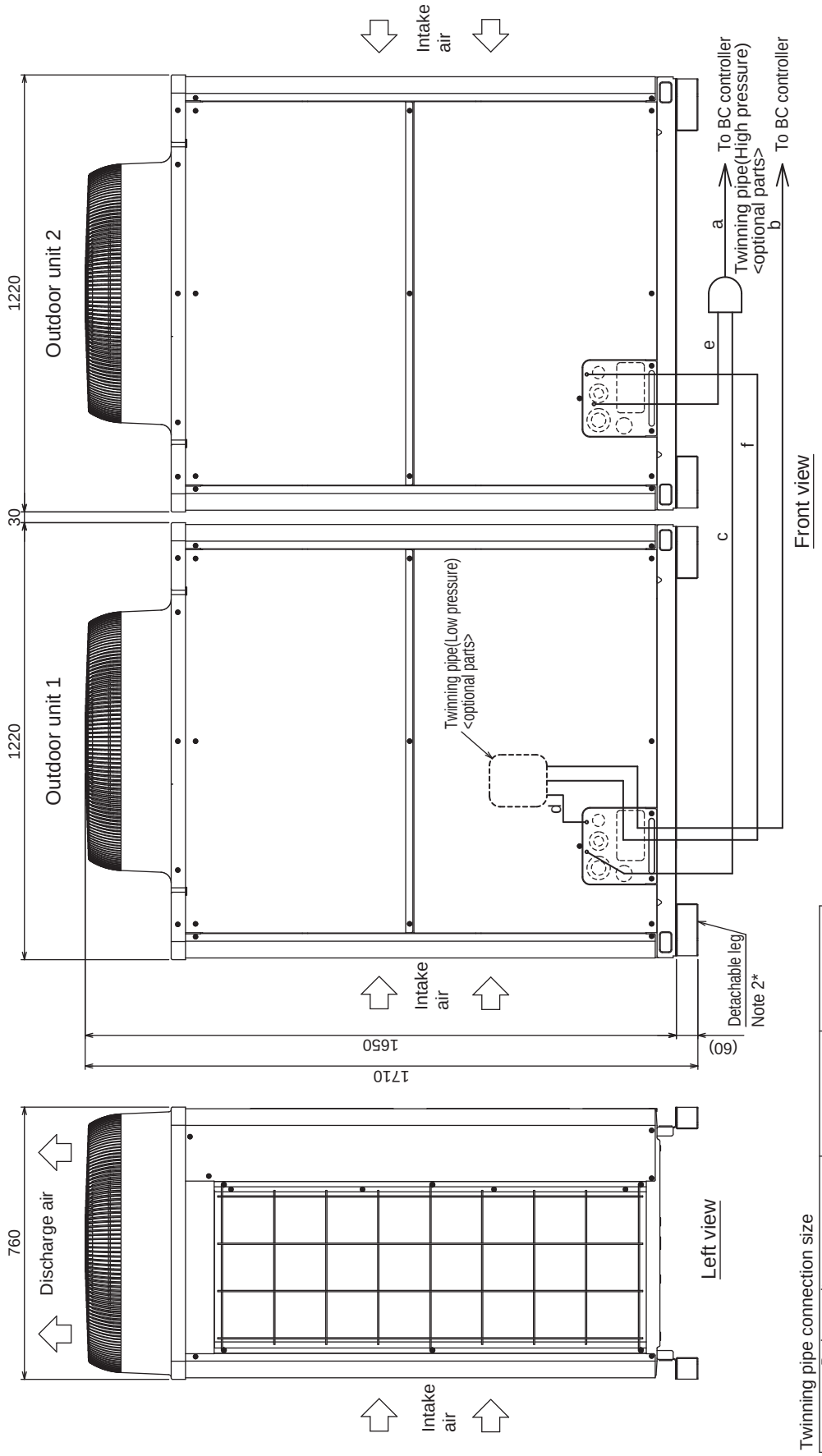

Twinning pipe connection size

Package unit name			PURY-P750YSHM-A(-BS)	PURY-P800YSHM-A(-BS)
Component unit name	Outdoor unit 1		PURY-P400YHM-A(-BS)	PURY-P400YHM-A(-BS)
	Outdoor unit 2		PURY-P350YHM-A(-BS)	PURY-P400YHM-A(-BS)
Outdoor Twinning Kit(optional parts)			CMY-R200VBK	
BC controller～Twinning pipe	High pressure	a	ø28.58	
	Low pressure	b	ø34.93	

		High pressure	Low pressure
Twinning pipe～Outdoor unit	Unit model	c or e	d or f
	P350	ø19.05	ø28.58
	P400	ø22.2	ø28.58

Note 1.Connect the pipes as shown in the figure above. Refer to the table above for the pipe size.
2.The detachable leg can be removed at site.
3.Twinning pipe (High pressure) should not be tilted more than 15 degrees from the ground.
4.See the Installation Manual for the details of Twinning pipe installation.

R2

3. CENTER OF GRAVITY

PURY-P200, P250, P300, EP200YHM-A (-BS)

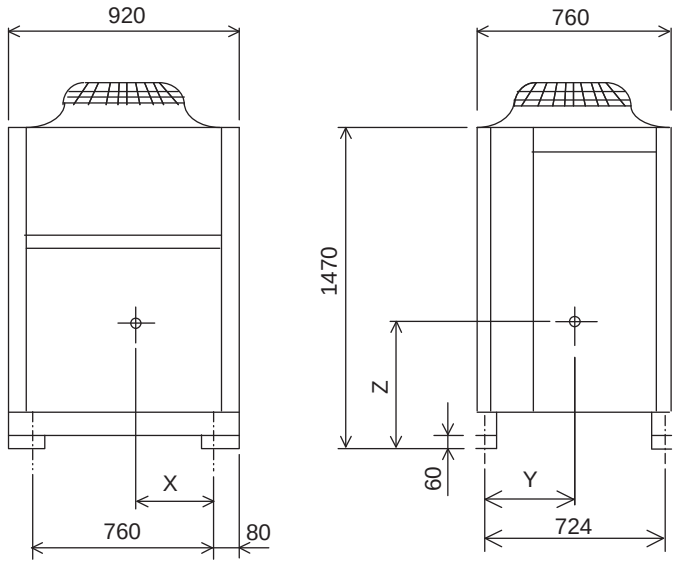

Model	X	Y	Z
PURY-P200YHM-A (-BS)	345	317	655
PURY-P250YHM-A (-BS)	345	332	655
PURY-P300YHM-A (-BS)	335	327	645
PURY-EP200YHM-A (-BS)	345	332	655

PURY-P350, P400, EP250, EP300YHM-A (-BS)

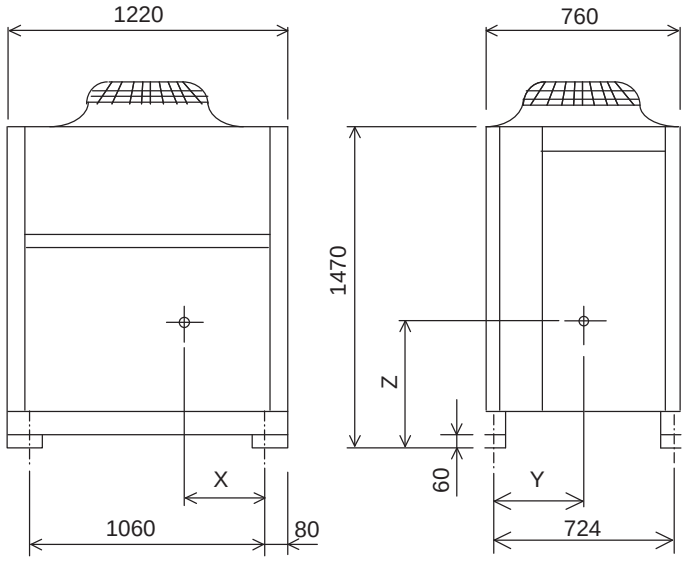

Model	X	Y	Z
PURY-P350YHM-A (-BS)	450	322	630
PURY-P400YHM-A (-BS)	450	322	630
PURY-EP250YHM-A (-BS)	450	322	630
PURY-EP300YHM-A (-BS)	450	322	630

Ref. : PURY_YHM-A_COG_EUDB_ALL_2

R2

PURY-P200,250,300,350,400YHM-A(-BS)
PURY-EP200,250,300YHM-A(-BS)

Ref. :PURY_YHM-A_EWD_EUDB_ALL

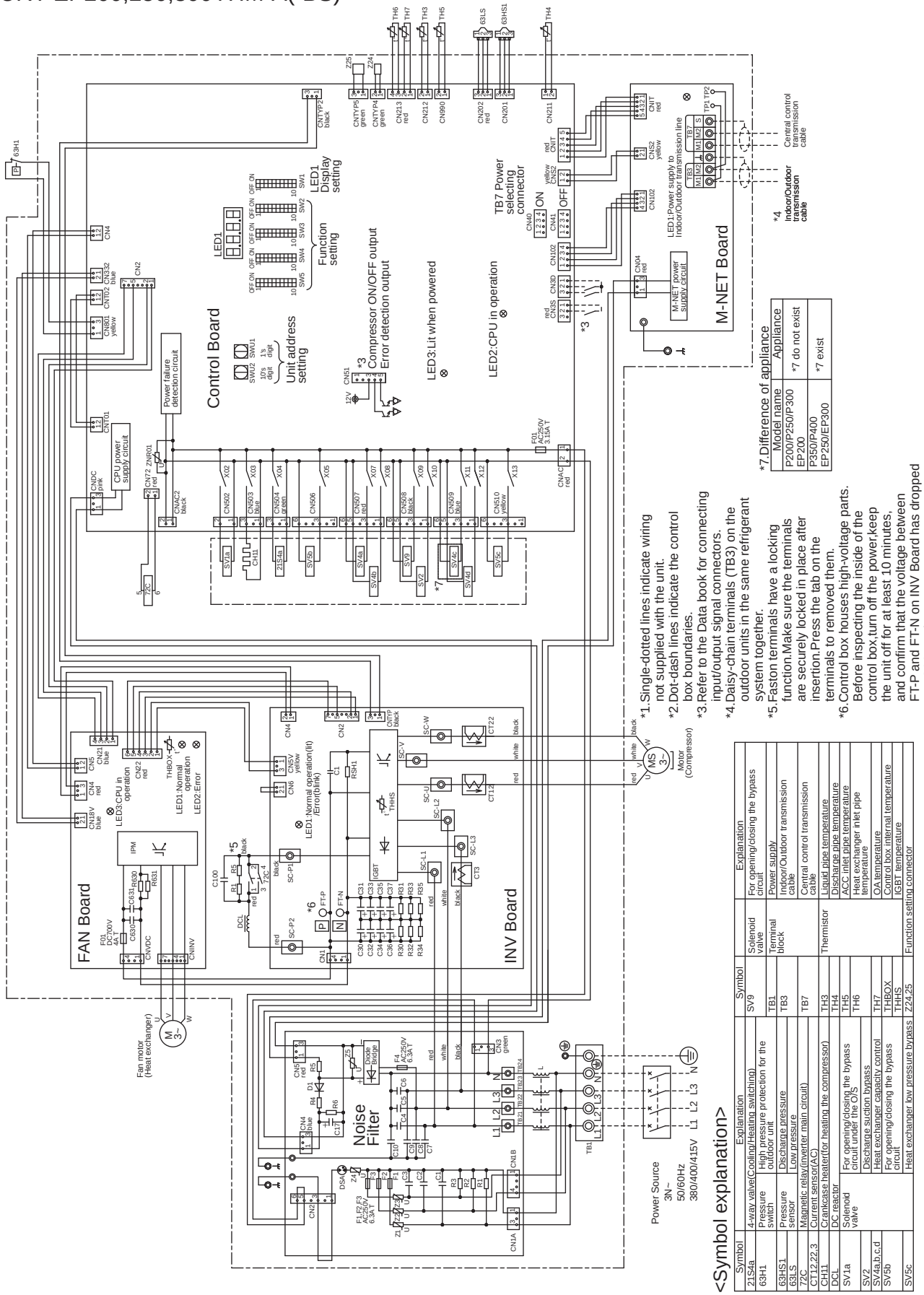

*1.Single-dotted lines indicate wiring not supplied with the unit.
*2.Dot-dash lines indicate the control box boundaries.
*3.Refer to the Data book for connecting input/output signal connectors.
*4.Daisy-chain terminals (TB3) on the outdoor units in the same refrigerant system together.
*5.Faston terminals have a locking function.Make sure the terminals are securely locked in place after insertion.Press the tab on the terminals to removed them.
*6.Control box houses high-voltage parts. Before inspecting the inside of the control box,turn off the power,keep the unit off for at least 10 minutes, and confirm that the voltage between FT-P and FT-N on INV Board has dropped to DC20V or less.

*7.Difference of appliance

Model name	Appliance
P200/P250/P300 EP200	*7 do not exist
P350/P400 EP250/EP300	*7 exist

<Symbol explanation>

Symbol	Explanation	Symbol	Explanation
21S4a	4-way valve(Cooling/Heating switching)	SV9	Solenoid valve
63H1	Pressure switch	High pressure protection for the outdoor unit	For opening/closing the bypass circuit
63HS1	Pressure sensor	Discharge pressure	TB1
63LS	Low pressure	TB3	Indoor/Outdoor transmission cable
72C	Magnetic relay(Inverter main circuit)	TB7	Central control transmission cable
CT12,22,3	Current sensor(AC)	TH3	Thermistor
CH11	Crankcase heater(for heating the compressor)	TH4	Liquid pipe temperature
DCL	DC reactor	TH5	Discharge pipe temperature
SV1a	Solenoid valve	For opening/closing the bypass circuit under the O/S	TH6
SV2	Discharge suction bypass	TH7	ACC inlet pipe temperature
SV4a,b,c,d	Heat exchanger capacity control	THBOX	Heat exchanger inlet pipe temperature
SV5b	For opening/closing the bypass circuit	THHS	OA temperature
SV5c	Heat exchanger low pressure bypass	Z24,25	Control box internal temperature
			IGBT temperature
			Function setting connector

R2

Measurement condition
PURY-P200,250,300YHM-A(-BS)

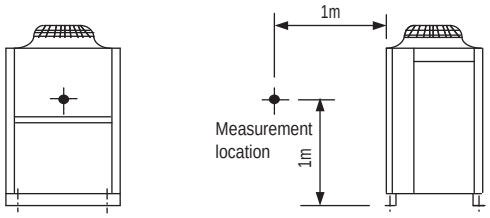

Sound level of PURY-P300YHM-A(-BS)

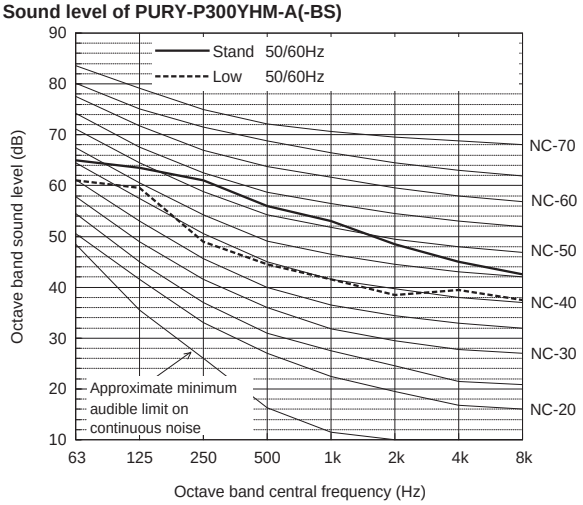

		63	125	250	500	1k	2k	4k	8k	dB(A)
Standard	50/60Hz	65.0	63.5	61.0	56.0	53.0	48.5	45.0	42.5	59.0
Low Noise Mode	50/60Hz	61.0	59.5	49.0	44.5	41.5	38.5	39.5	37.5	50.0

When Low Noise Mode is set,the A/C system's capacity is limited. The system could return to normal operation from Low Noise Mode automatically in the case that the operation condition is severe.

Sound level of PURY-P200YHM-A(-BS)

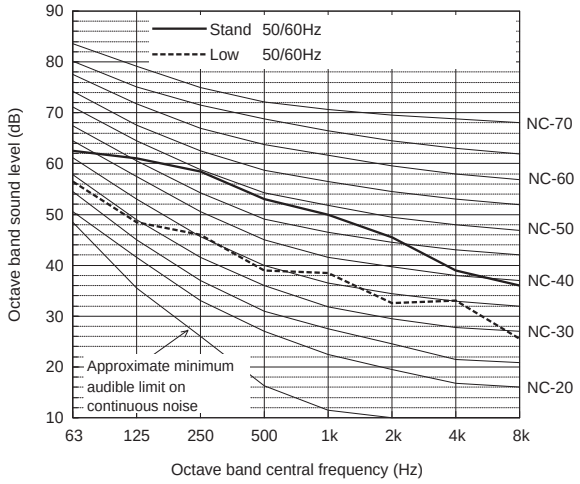

		63	125	250	500	1k	2k	4k	8k	dB(A)
Standard	50/60Hz	62.5	61.0	58.5	53.0	50.0	45.5	39.0	36.0	56.0
Low Noise Mode	50/60Hz	56.5	48.5	46.0	39.0	38.5	32.5	33.0	25.5	44.0

When Low Noise Mode is set,the A/C system's capacity is limited. The system could return to normal operation from Low Noise Mode automatically in the case that the operation condition is severe.

Sound level of PURY-P250YHM-A(-BS)

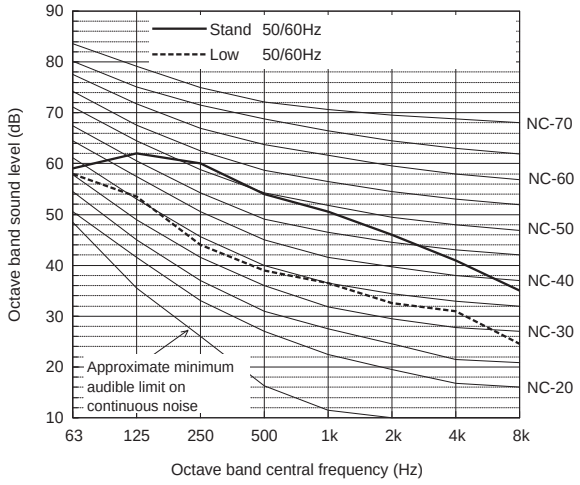

		63	125	250	500	1k	2k	4k	8k	dB(A)
Standard	50/60Hz	59.0	62.0	60.0	54.0	50.5	46.0	41.0	35.0	57.0
Low Noise Mode	50/60Hz	58.0	53.5	44.0	39.0	36.5	32.5	31.0	24.5	44.0

When Low Noise Mode is set,the A/C system's capacity is limited. The system could return to normal operation from Low Noise Mode automatically in the case that the operation condition is severe.

R2

Measurement condition
PURY-P350,400YHM-A(-BS)

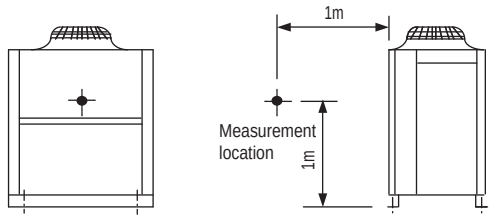

Sound level of PURY-P350YHM-A(-BS)

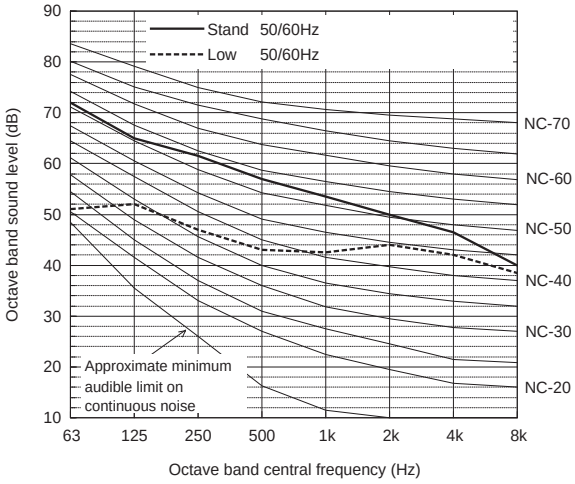

		63	125	250	500	1k	2k	4k	8k	dB(A)
Standard	50/60Hz	72.0	65.0	61.5	57.0	53.5	50.0	46.5	40.0	60.0
Low Noise Mode	50/60Hz	51.0	52.0	47.0	43.0	42.5	44.0	42.0	38.5	50.0

When Low Noise Mode is set,the A/C system's capacity is limited. The system could return to normal operation from Low Noise Mode automatically in the case that the operation condition is severe.

Sound level of PURY-P400YHM-A(-BS)

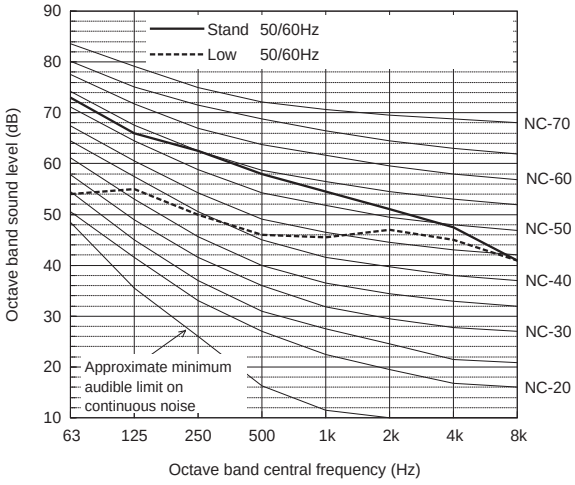

		63	125	250	500	1k	2k	4k	8k	dB(A)
Standard	50/60Hz	73.0	66.0	62.5	58.0	54.5	51.0	47.5	41.0	61.0
Low Noise Mode	50/60Hz	54.0	55.0	50.0	46.0	45.5	47.0	45.0	41.0	53.0

When Low Noise Mode is set,the A/C system's capacity is limited. The system could return to normal operation from Low Noise Mode automatically in the case that the operation condition is severe.

R2

R2

Measurement condition
PURY-P450,500,550,600YSHM-A(-BS)

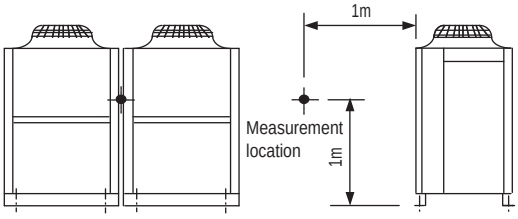

Sound level of PURY-P550YSHM-A(-BS)

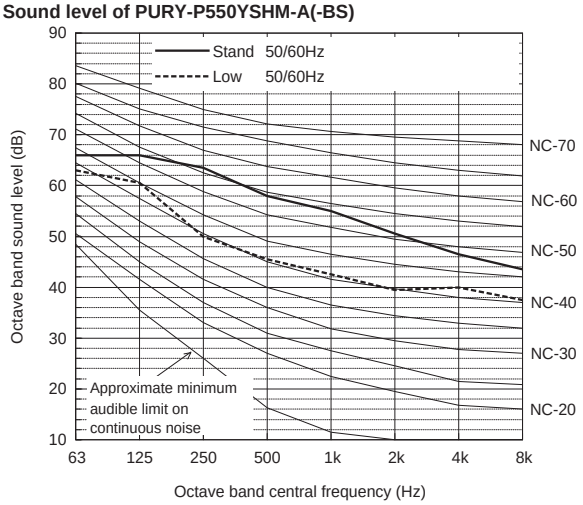

		63	125	250	500	1k	2k	4k	8k	dB(A)
Standard	50/60Hz	66.0	66.0	63.5	58.0	55.0	50.5	46.5	43.5	61.0
Low Noise Mode	50/60Hz	63.0	60.5	50.0	45.5	42.5	39.5	40.0	37.5	51.0

When Low Noise Mode is set,the A/C system's capacity is limited. The system could return to normal operation from Low Noise Mode automatically in the case that the operation condition is severe.

Sound level of PURY-P450YSHM-A(-BS)

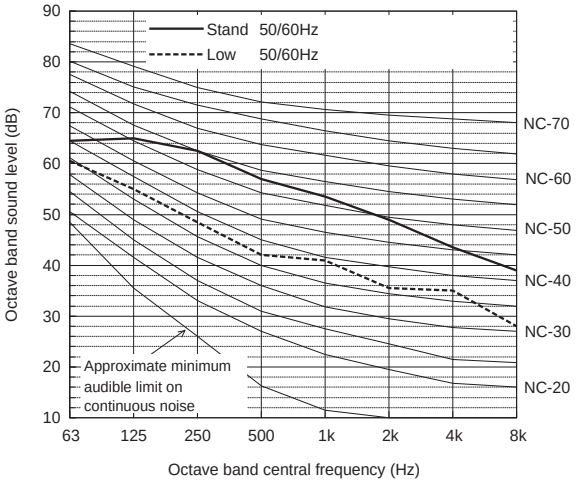

		63	125	250	500	1k	2k	4k	8k	dB(A)
Standard	50/60Hz	64.5	65.0	62.5	57.0	53.5	49.0	43.5	39.0	60.0
Low Noise Mode	50/60Hz	60.5	55.0	48.5	42.0	41.0	35.5	35.0	28.0	47.0

When Low Noise Mode is set,the A/C system's capacity is limited. The system could return to normal operation from Low Noise Mode automatically in the case that the operation condition is severe.

Sound level of PURY-P600YSHM-A(-BS)

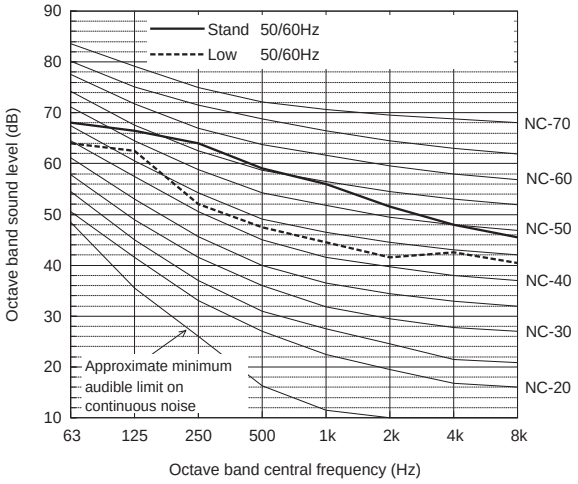

		63	125	250	500	1k	2k	4k	8k	dB(A)
Standard	50/60Hz	68.0	66.5	64.0	59.0	56.0	51.5	48.0	45.5	62.0
Low Noise Mode	50/60Hz	64.0	62.5	52.0	47.5	44.5	41.5	42.5	40.5	53.0

When Low Noise Mode is set,the A/C system's capacity is limited. The system could return to normal operation from Low Noise Mode automatically in the case that the operation condition is severe.

Sound level of PURY-P500YSHM-A(-BS)

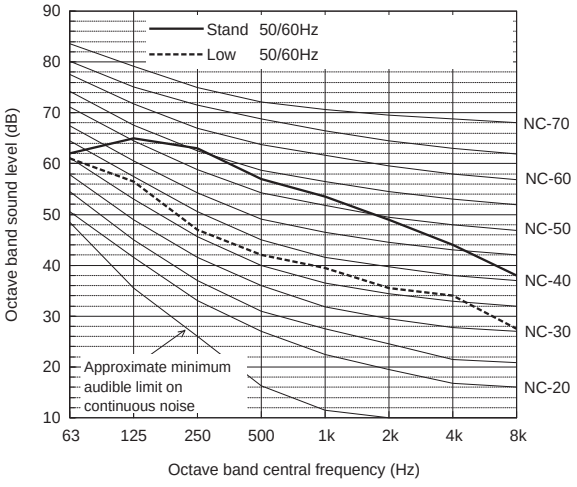

		63	125	250	500	1k	2k	4k	8k	dB(A)
Standard	50/60Hz	62.0	65.0	63.0	57.0	53.5	49.0	44.0	38.0	60.0
Low Noise Mode	50/60Hz	61.0	56.5	47.0	42.0	39.5	35.5	34.0	27.5	47.0

When Low Noise Mode is set,the A/C system's capacity is limited. The system could return to normal operation from Low Noise Mode automatically in the case that the operation condition is severe.

Measurement condition
PURY-P650,700YSHM-A(-BS)

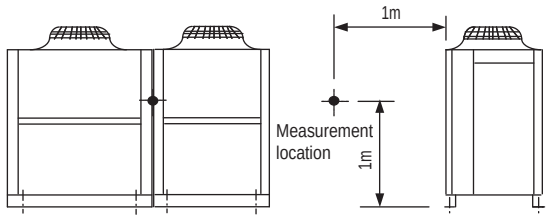

Sound level of PURY-P650YSHM-A(-BS)

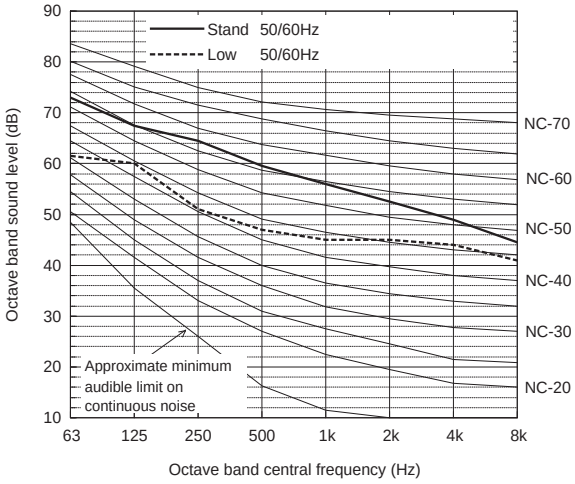

		63	125	250	500	1k	2k	4k	8k	dB(A)
Standard	50/60Hz	73.0	67.5	64.5	59.5	56.0	52.5	49.0	44.5	62.5
Low Noise Mode	50/60Hz	61.5	60.0	51.0	47.0	45.0	45.0	44.0	41.0	53.0

When Low Noise Mode is set,the A/C system's capacity is limited. The system could return to normal operation from Low Noise Mode automatically in the case that the operation condition is severe.

Sound level of PURY-P700YSHM-A(-BS)

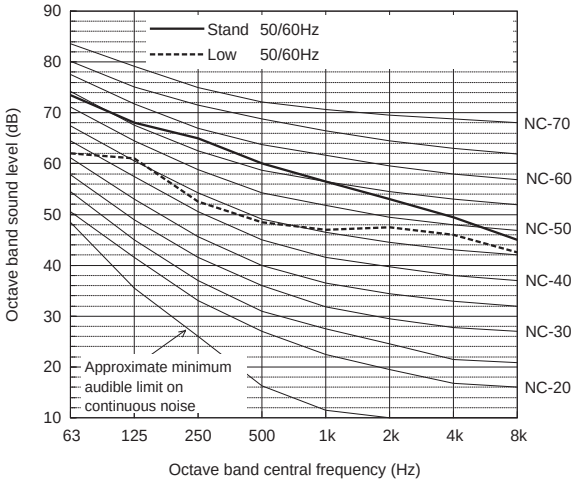

		63	125	250	500	1k	2k	4k	8k	dB(A)
Standard	50/60Hz	73.5	68.0	65.0	60.0	56.5	53.0	49.5	45.0	63.0
Low Noise Mode	50/60Hz	62.0	61.0	52.5	48.5	47.0	47.5	46.0	42.5	54.5

When Low Noise Mode is set,the A/C system's capacity is limited. The system could return to normal operation from Low Noise Mode automatically in the case that the operation condition is severe.

R2

Measurement condition
PURY-P750,800YSHM-A(-BS)

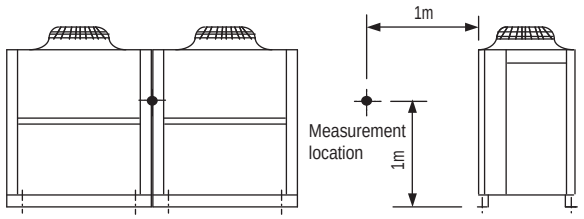

R2

Sound level of PURY-P750YSHM-A(-BS)

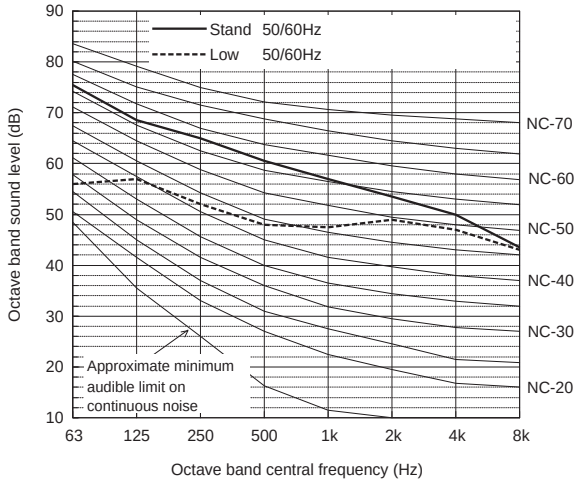

		63	125	250	500	1k	2k	4k	8k	dB(A)
Standard	50/60Hz	75.5	68.5	65.0	60.5	57.0	53.5	50.0	43.5	63.5
Low Noise Mode	50/60Hz	56.0	57.0	52.0	48.0	47.5	49.0	47.0	43.0	55.0

When Low Noise Mode is set,the A/C system's capacity is limited. The system could return to normal operation from Low Noise Mode automatically in the case that the operation condition is severe.

Sound level of PURY-P800YSHM-A(-BS)

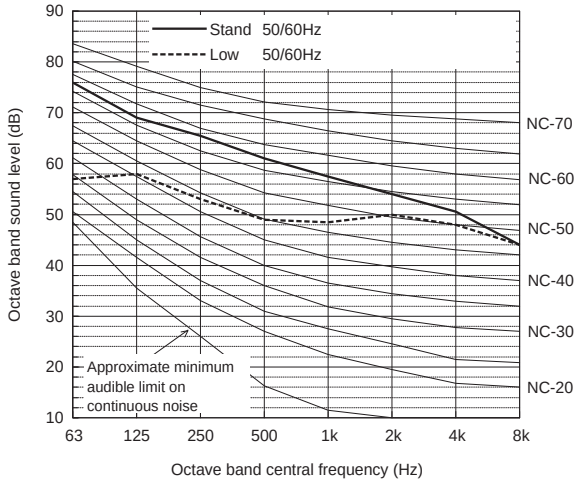

		63	125	250	500	1k	2k	4k	8k	dB(A)
Standard	50/60Hz	76.0	69.0	65.5	61.0	57.5	54.0	50.5	44.0	64.0
Low Noise Mode	50/60Hz	57.0	58.0	53.0	49.0	48.5	50.0	48.0	44.0	56.0

When Low Noise Mode is set,the A/C system's capacity is limited. The system could return to normal operation from Low Noise Mode automatically in the case that the operation condition is severe.

6-1. Correction by temperature

CITY MULTI could have various capacities at different designing temperatures. Using the nominal cooling/heating capacity values and the ratios below, the capacity can be found for various temperatures.

PURY-		P200YHM-A(-BS)	P250YHM-A(-BS)
Nominal Cooling Capacity	kW	22.4	28.0
	BTU/h	76,400	95,500
Input	kW	5.77	7.73

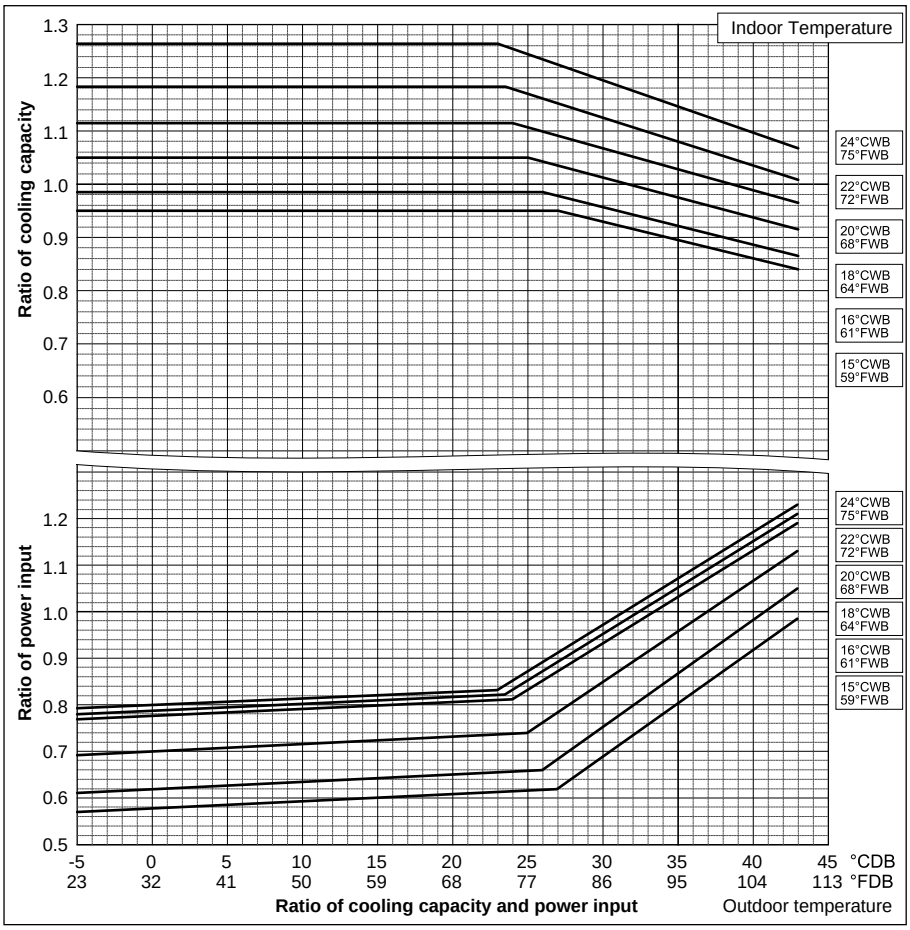

PURY-		P200YHM-A(-BS)	P250YHM-A(-BS)
Nominal Heating Capacity	kW	25.0	31.5
	BTU/h	85,300	107,500
Input	kW	6.14	7.83

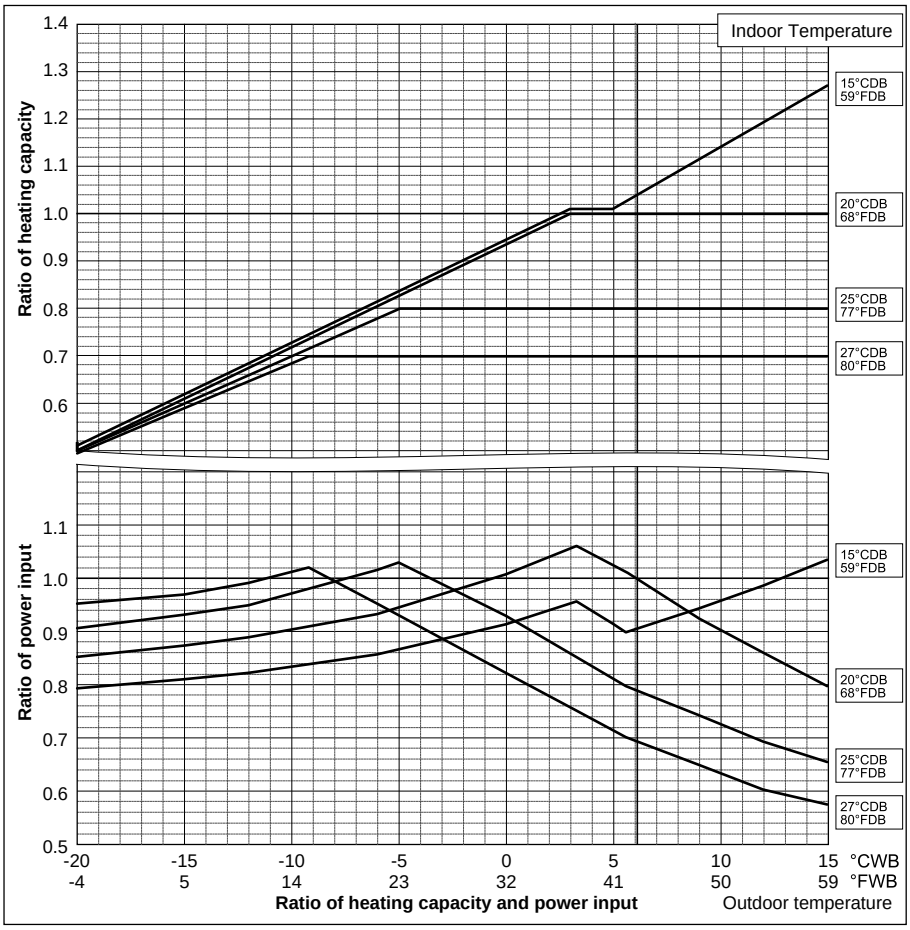

Ref:PURY_YHM-A_CbTMP_EUDB_P200-P250

R2

R2

PURY-		P300YHM-A(-BS)	P350YHM-A(-BS)
Nominal Cooling Capacity	kW	33.5	40.0
	BTU/h	114,300	136,500
Input	kW	9.25	12.47

PURY-		P400YHM-A(-BS)
Nominal Cooling Capacity	kW	45.0
	BTU/h	153,500
Input	kW	13.74

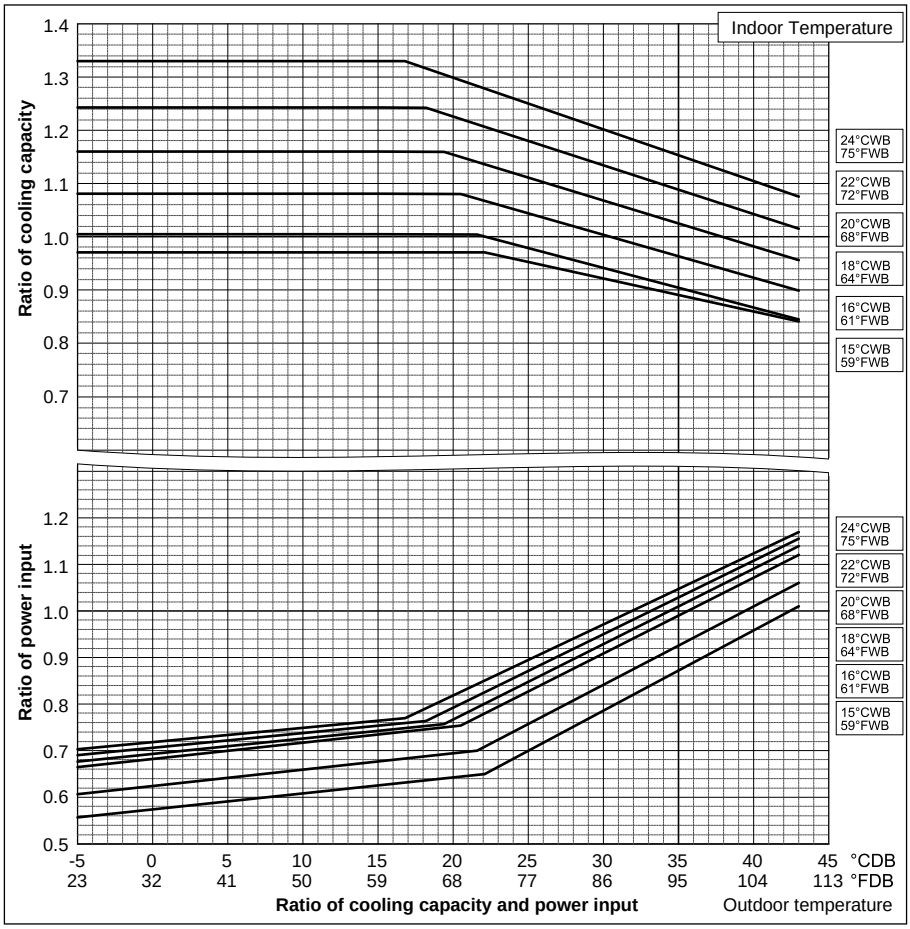

PURY-		P300YHM-A(-BS)	P350YHM-A(-BS)
Nominal Heating Capacity	kW	37.5	45.0
	BTU/h	128,000	153,500
Input	kW	9.58	12.47

PURY-		P400YHM-A(-BS)
Nominal Heating Capacity	kW	50.0
	BTU/h	170,600
Input	kW	13.71

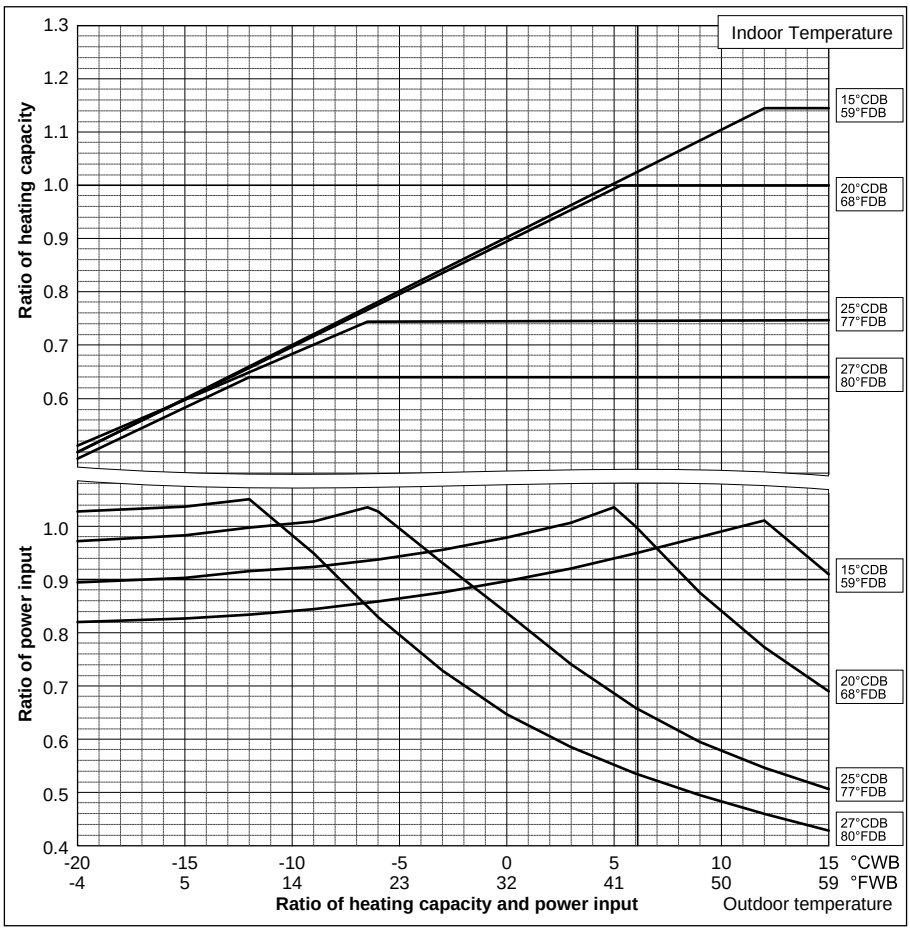

Ref:PURY_YHM-A_CbTMP_EUDB_P300-P400

6. CAPACITY TABLES

PURY-		P450YSHM-A(-BS)	P500YSHM-A(-BS)
Nominal Cooling Capacity	kW	50.0	56.0
	BTU/h	170,600	191,100
Input	kW	14.14	16.75

PURY-		P550YSHM-A(-BS)	P600YSHM-A(-BS)
Nominal Cooling Capacity	kW	63.0	69.0
	BTU/h	215,000	235,400
Input	kW	18.68	19.64

PURY-		P650YSHM-A(-BS)
Nominal Cooling Capacity	kW	73.0
	BTU/h	249,100
Input	kW	22.80

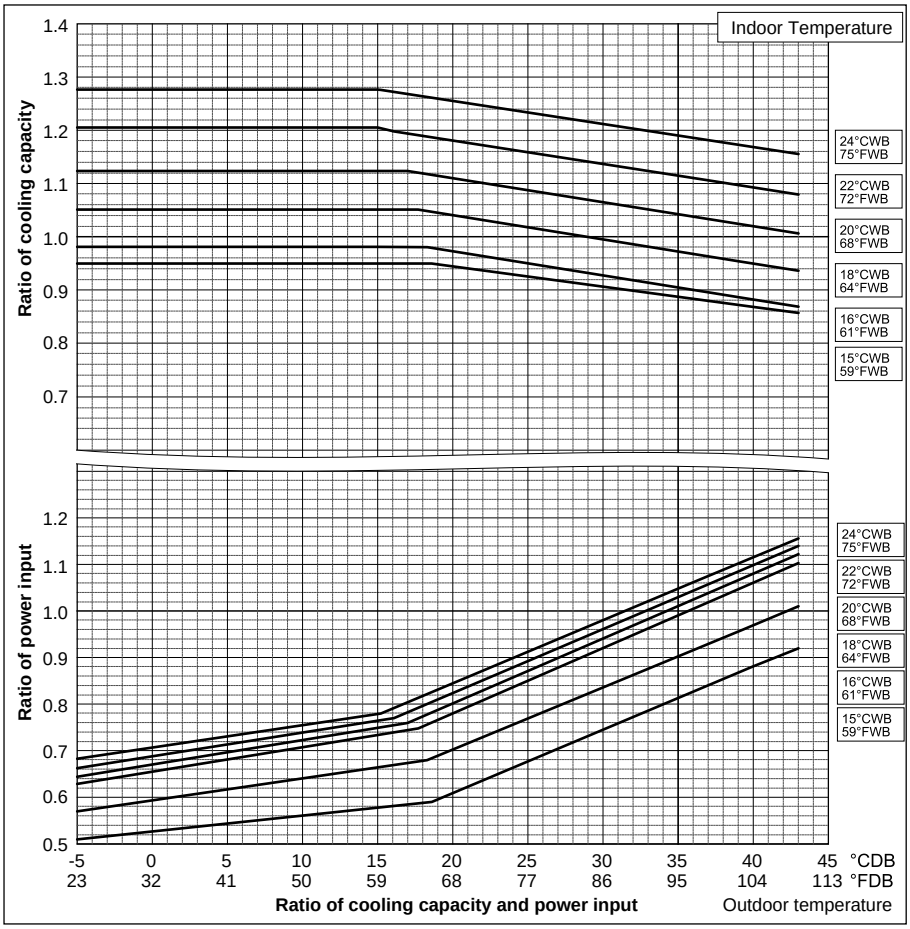

PURY-		P450YSHM-A(-BS)	P500YSHM-A(-BS)
Nominal Heating Capacity	kW	56.0	63.0
	BTU/h	191,100	215,000
Input	kW	14.71	16.79

PURY-		P550YSHM-A(-BS)	P600YSHM-A(-BS)
Nominal Heating Capacity	kW	69.0	76.5
	BTU/h	235,400	261,000
Input	kW	18.81	20.83

PURY-		P650YSHM-A(-BS)
Nominal Heating Capacity	kW	81.5
	BTU/h	278,100
Input	kW	22.55

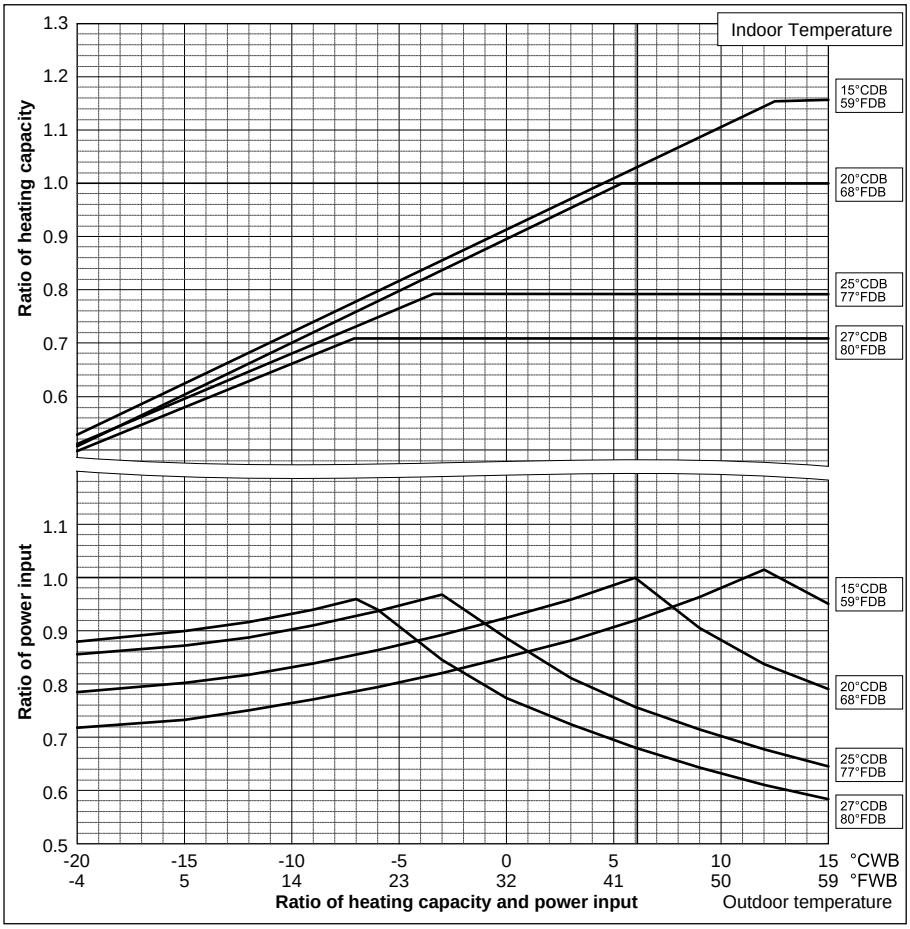

Ref:PURY_YHM-A_CbTMP_EUDB_P450-P650

R2

PURY-		P700YSHM-A(-BS)	P750YSHM-A(-BS)
Nominal Cooling Capacity	kW	80.0	85.0
	BTU/h	273,000	290,000
Input	kW	24.72	27.86

PURY-		P800YSHM-A(-BS)
Nominal Cooling Capacity	kW	90.0
	BTU/h	307,100
Input	kW	29.75

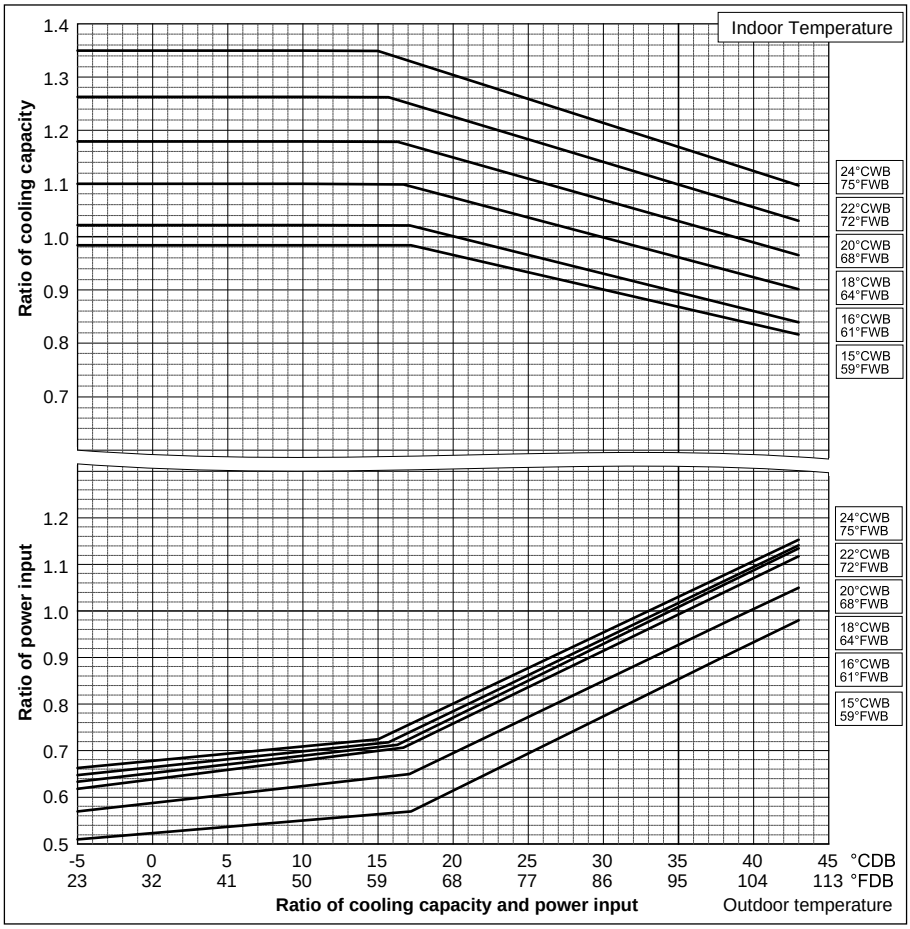

PURY-		P700YSHM-A(-BS)	P750YSHM-A(-BS)
Nominal Heating Capacity	kW	88.0	95.0
	BTU/h	300,300	324,100
Input	kW	24.30	26.36

PURY-		P800YSHM-A(-BS)
Nominal Heating Capacity	kW	100.0
	BTU/h	341,200
Input	kW	27.64

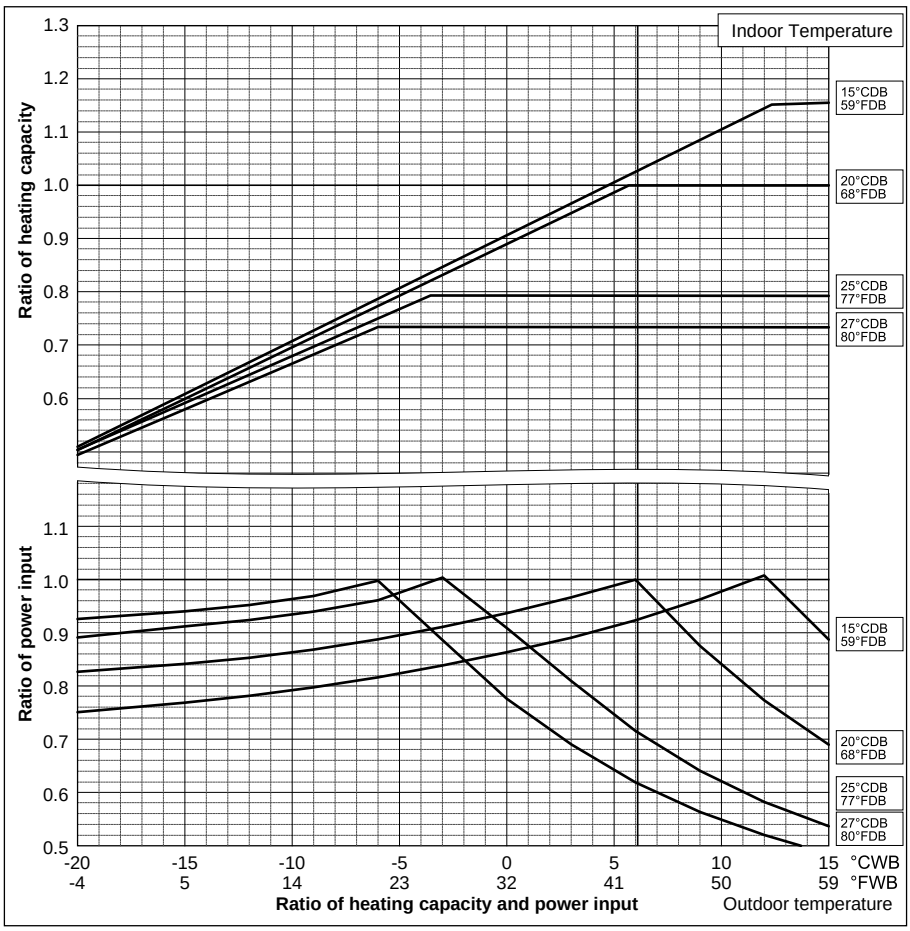

Ref:PURY_YHM-A_CbTMP_EUDB_P700-P800

R2

6-2. Correction by total indoor

CITY MULTI system has different capacity and input at different total capacity of indoor unit connected. Using following tables, the maximum capacity can be observed so as to ensure the system having enough capacity to meet the conditions.

PURY-P200,250YHM-A(-BS)

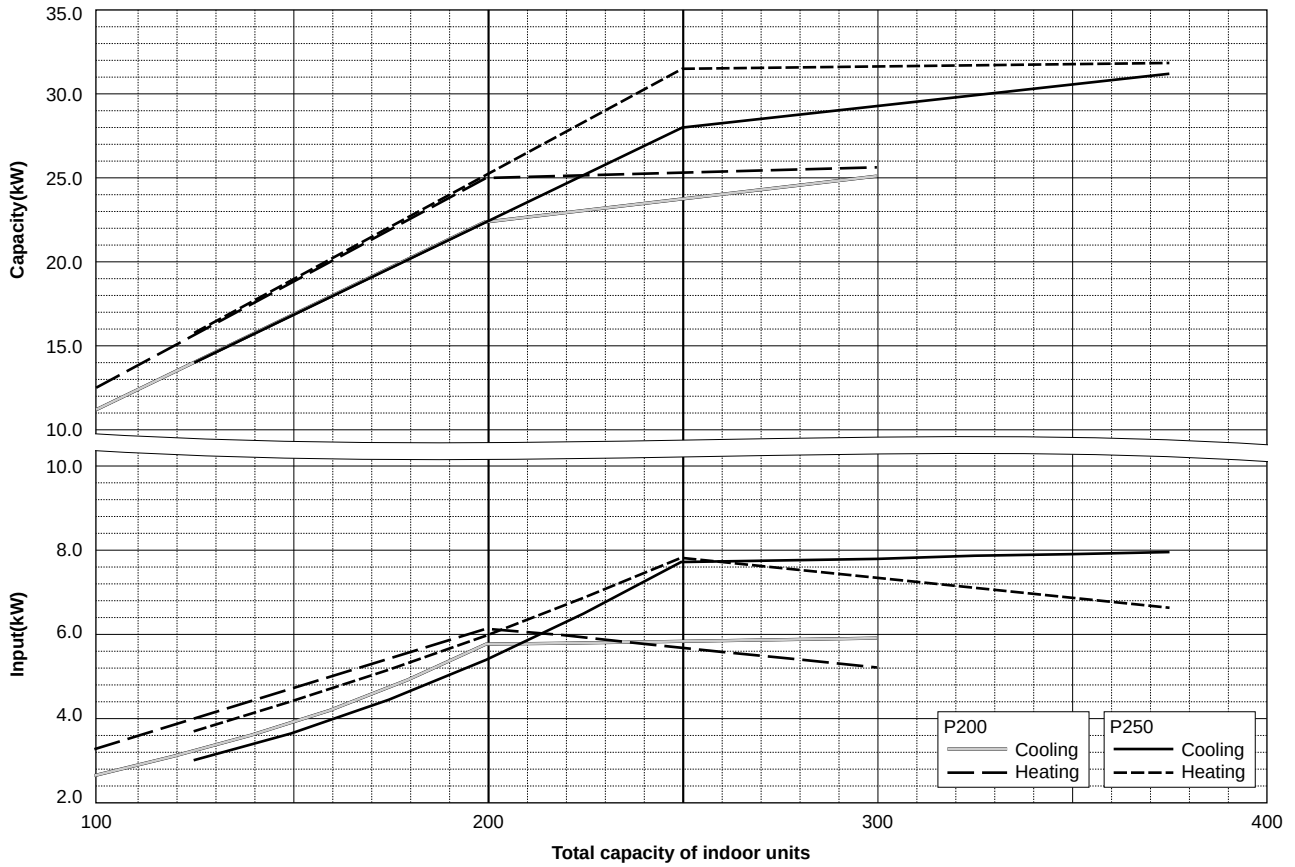

PURY-P300,350YHM-A(-BS)

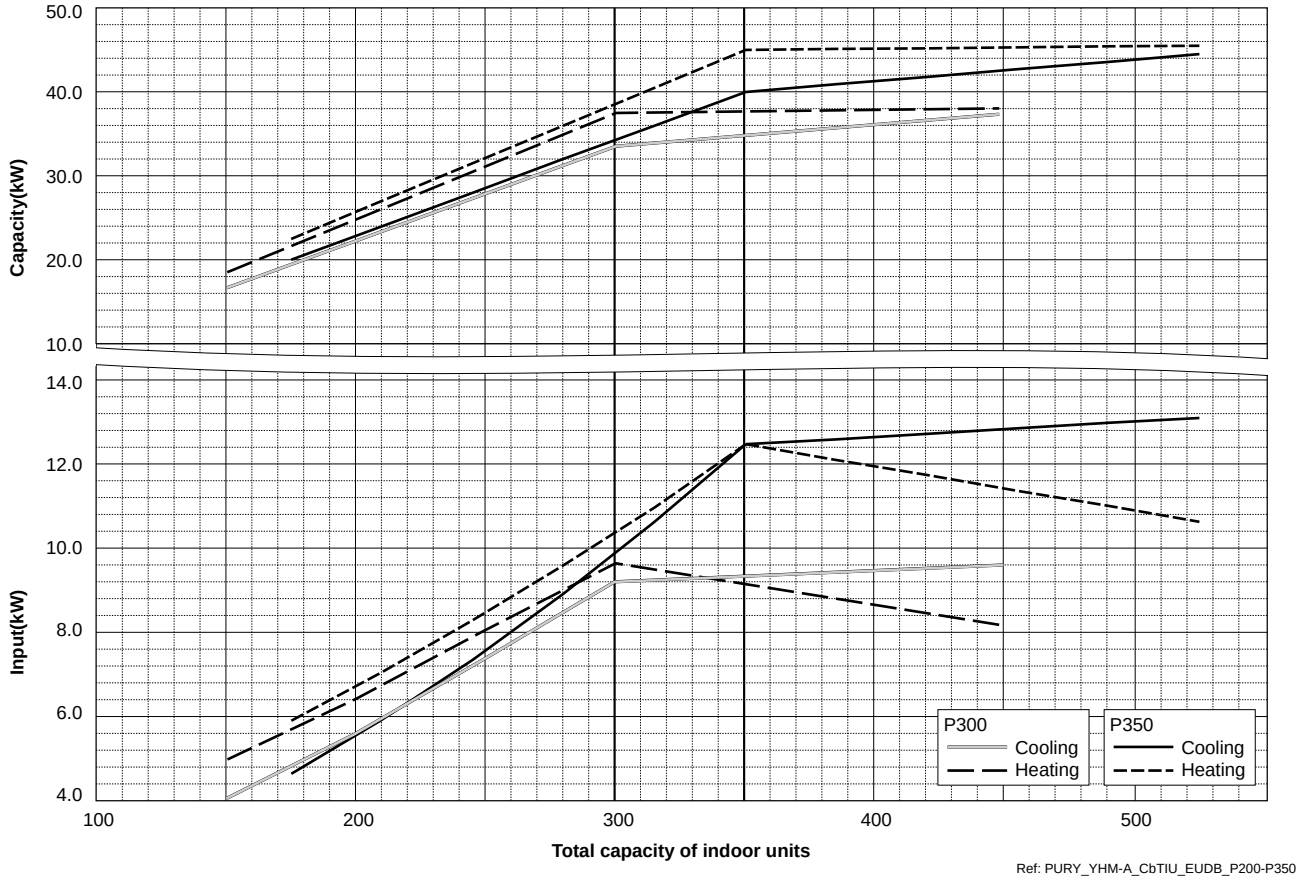

Ref: PURY_YHM-A_CbTIU_EUDB_P200-P350

R2

R2

PURY-P400,450Y(S)HM-A(-BS)

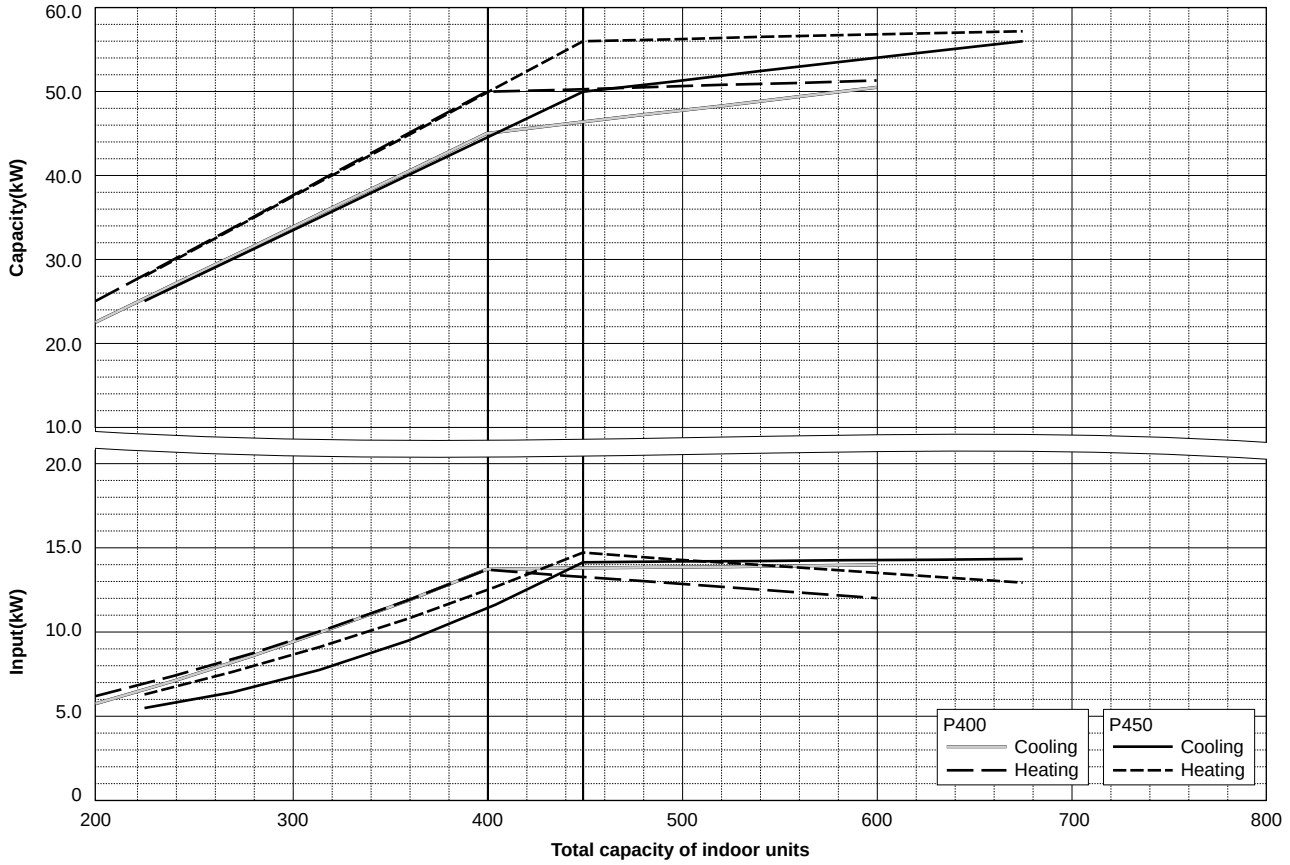

PURY-P500,550YSHM-A(-BS)

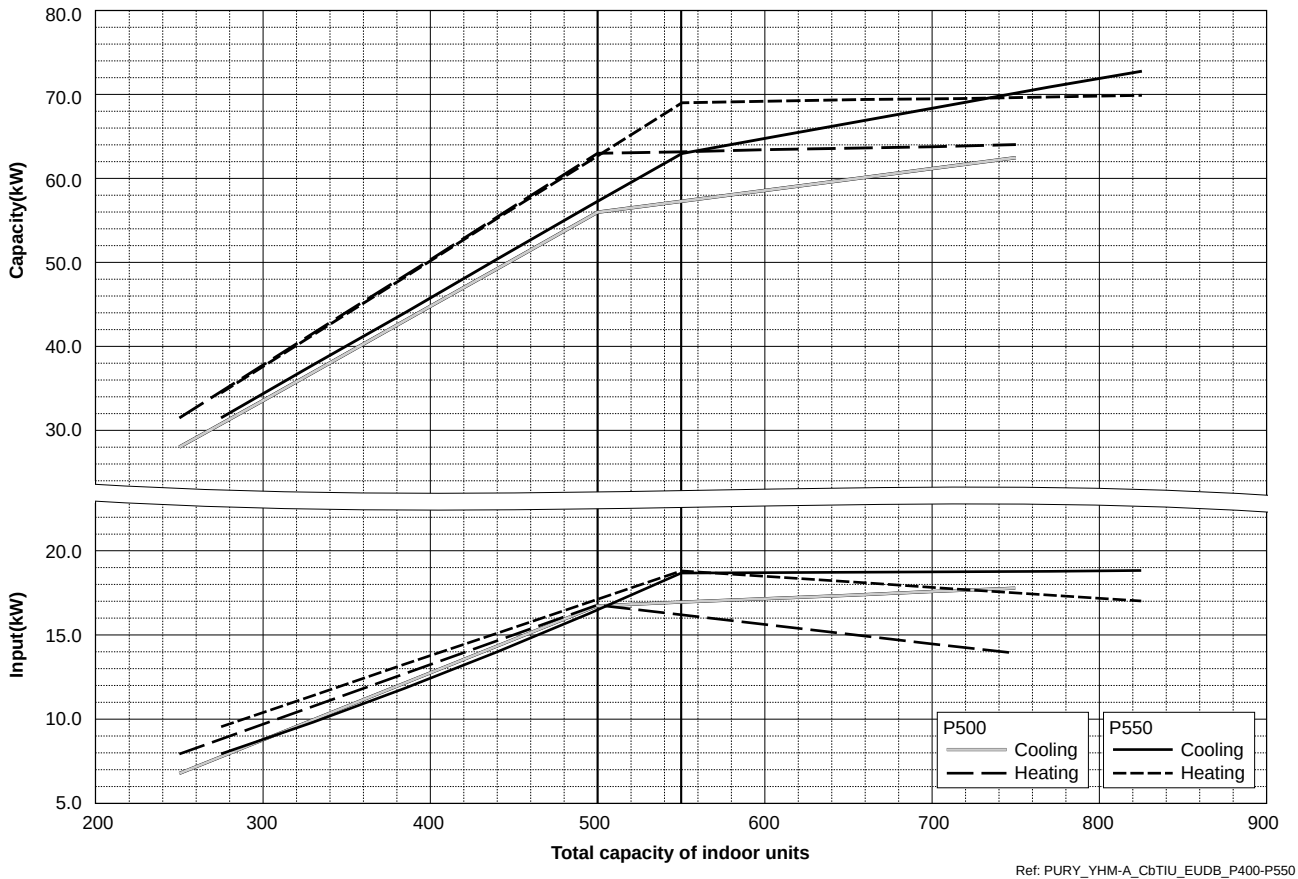

Ref: PURY_YHM-A_CbTIU_EUDB_P400-P550

PURY-P600,650YSHM-A(-BS)

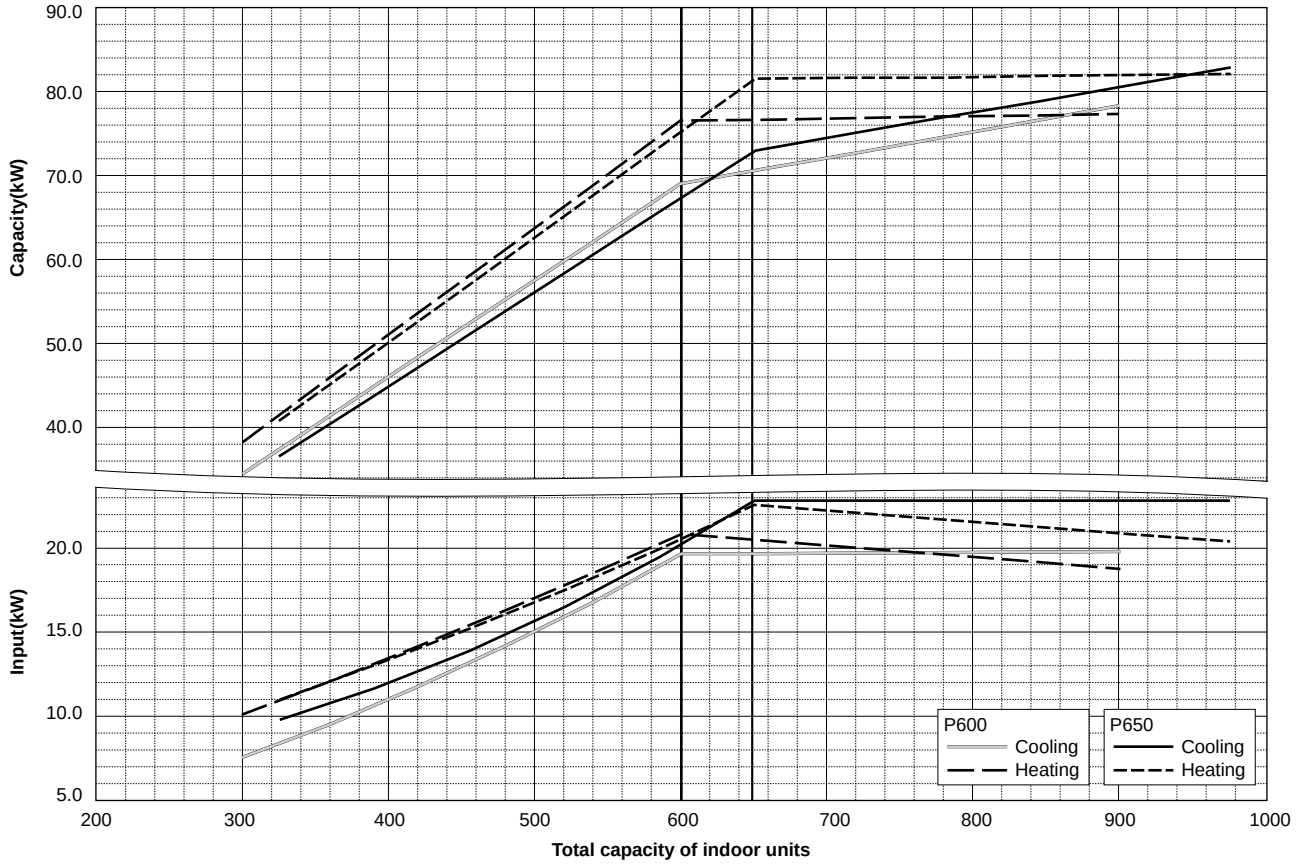

PURY-P700,750YSHM-A(-BS)

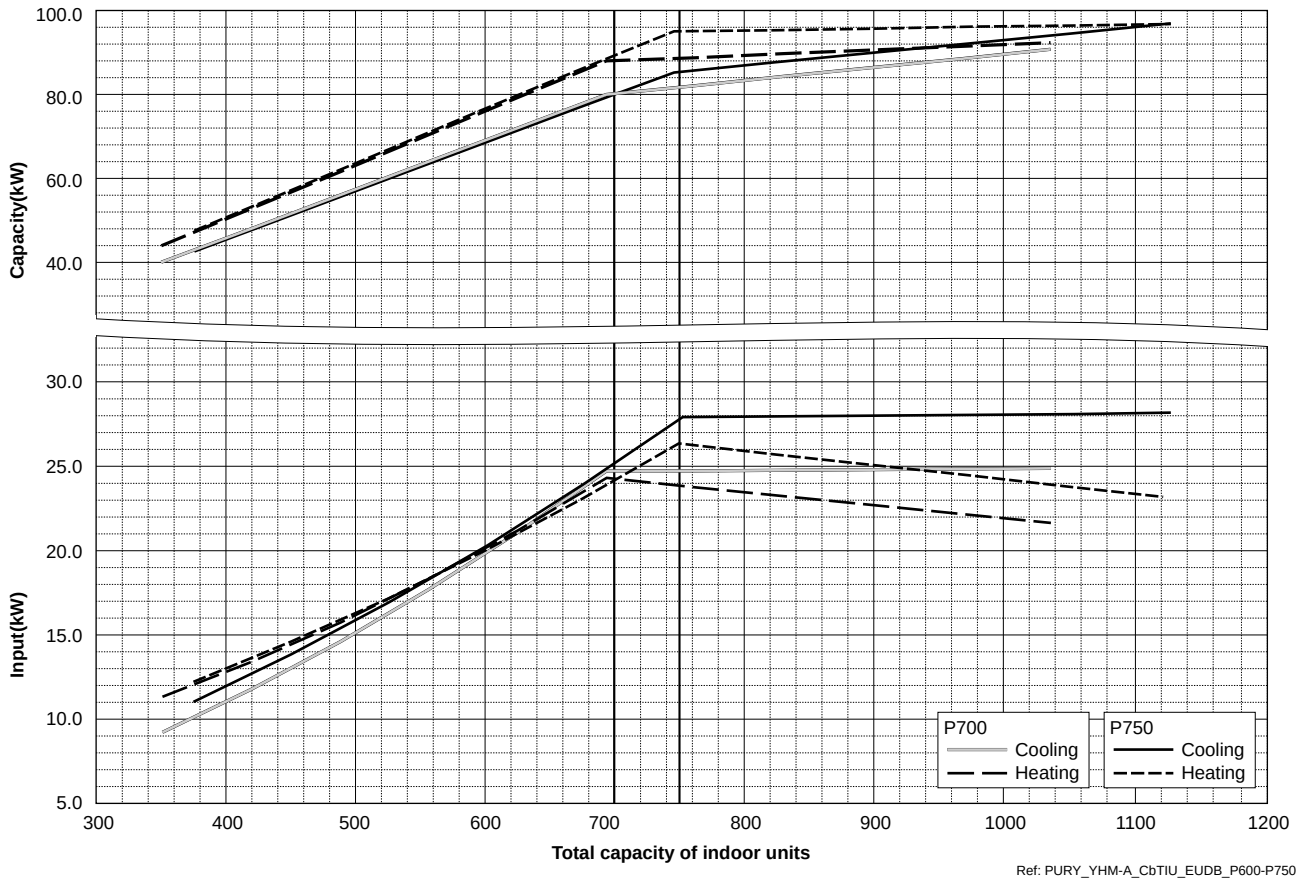

Ref: PURY_YHM-A_CbTIU_EUDB_P600-P750

R2

R2

PURY-P800YSHM-A(-BS)

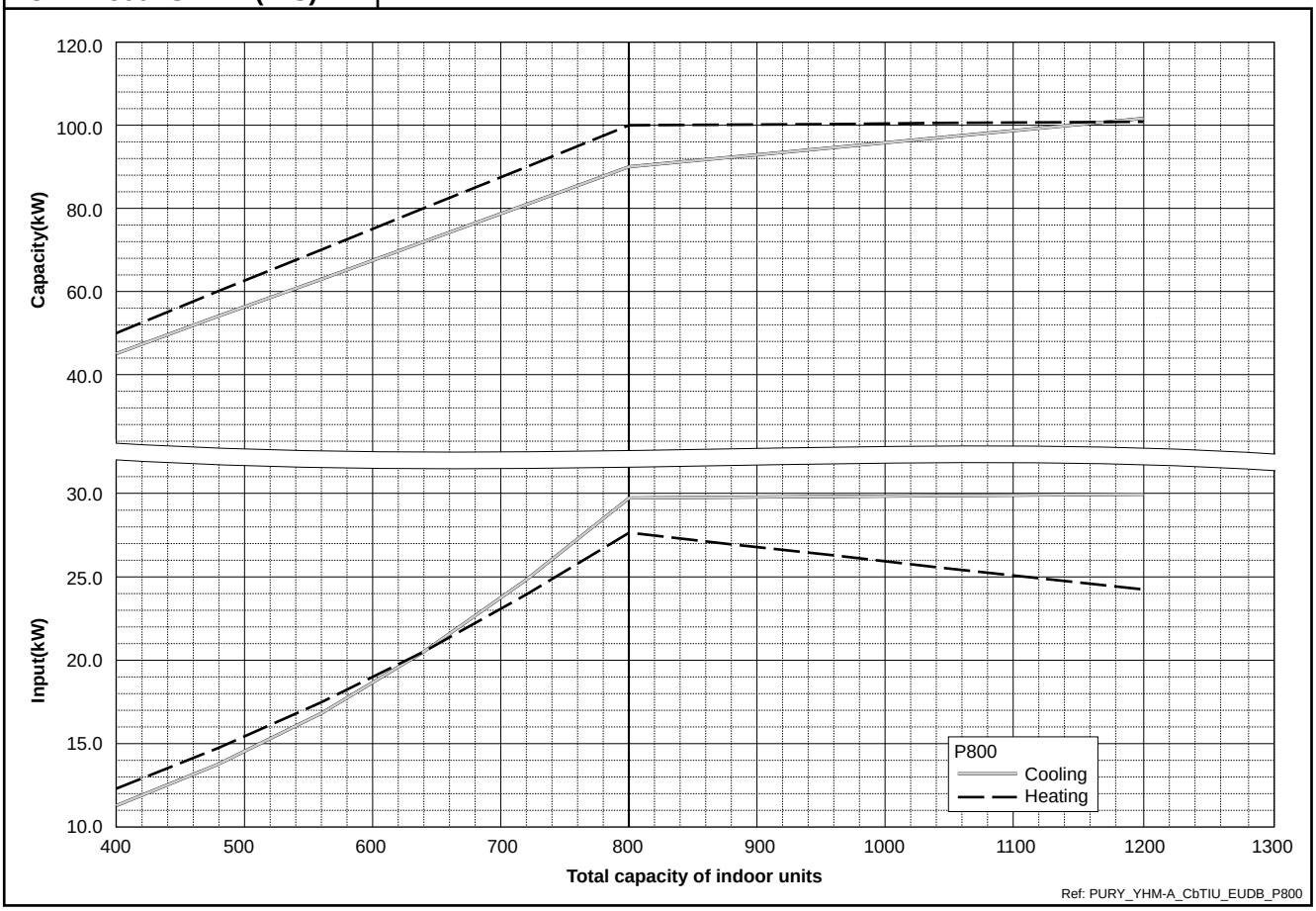

6-3. Correction by refrigerant piping length

CITY MULTI system can extend the piping flexibly within its limitation for the actual situation. Yet, a decrease of cooling/heating capacity could happen correspondently. Using following correction factor according to the equivalent length of the piping shown at 6-3-1 and 6-3-2, the capacity can be observed. 6-3-3 shows how to obtain the equivalent length of piping.

6-3-1. Cooling capacity correction

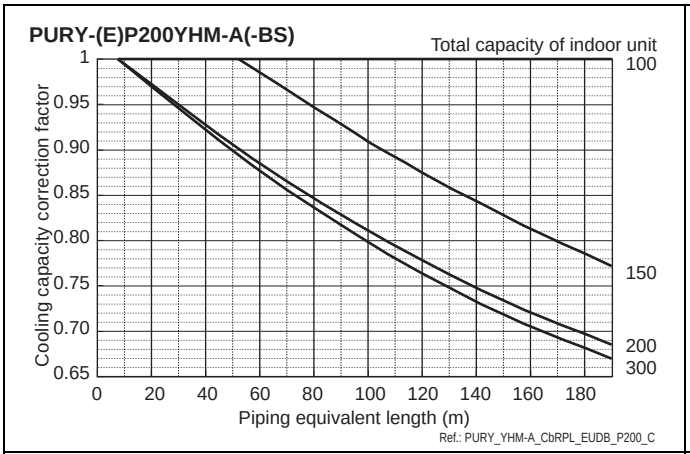

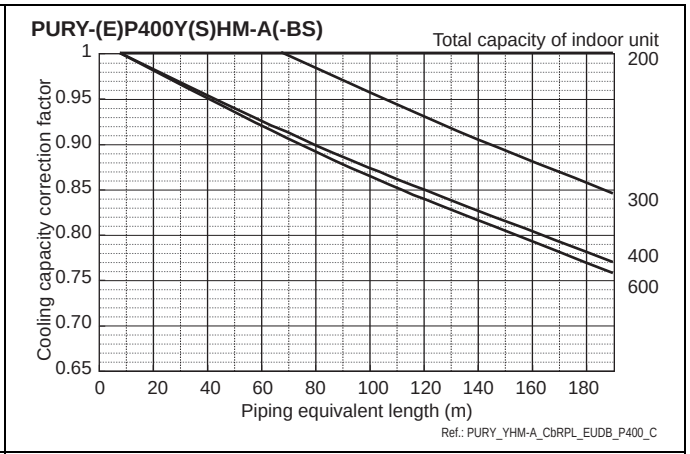

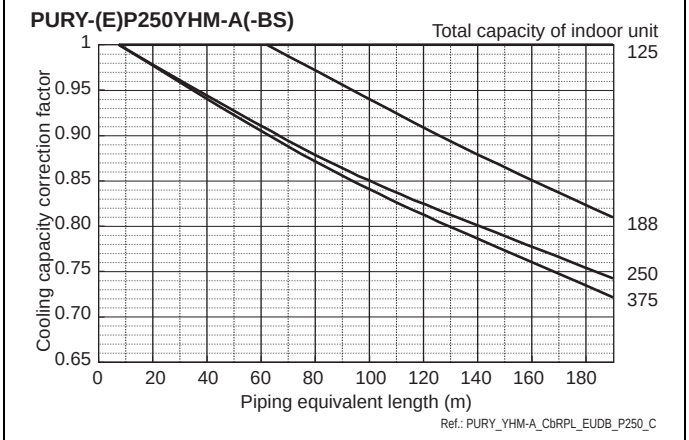

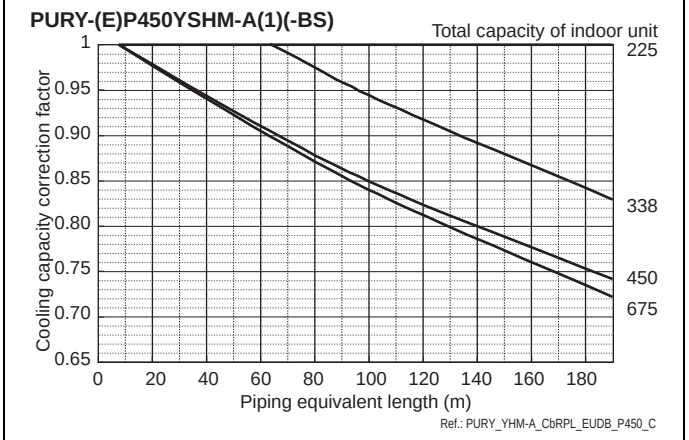

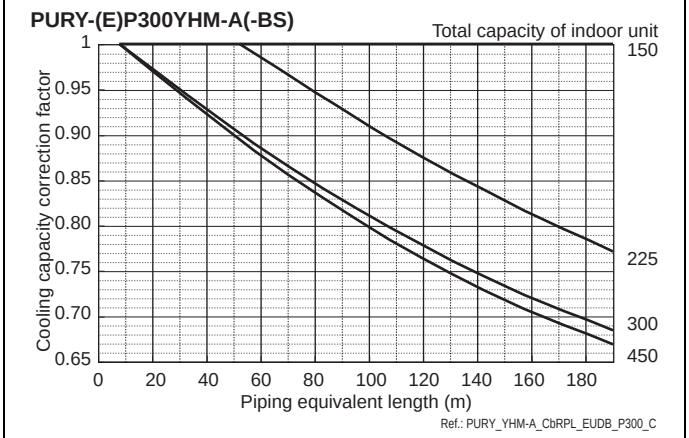

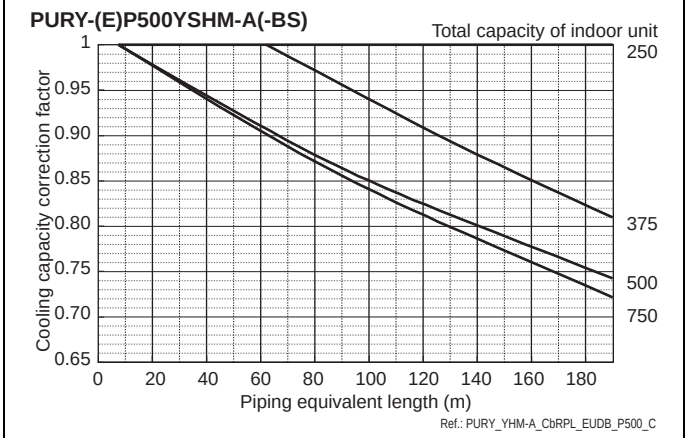

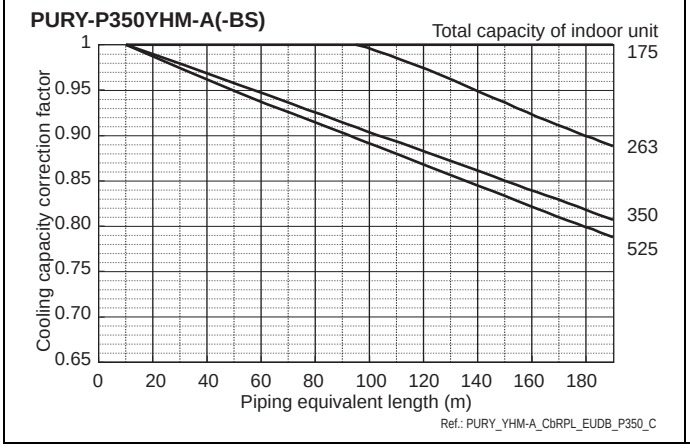

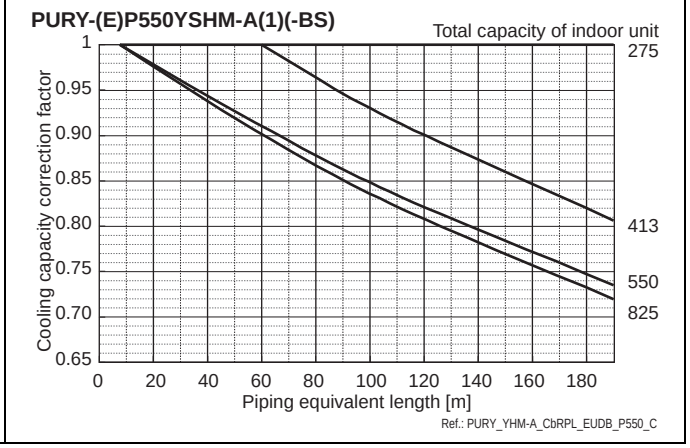

R2

PURY-(E)P600YSHM-A(-BS)

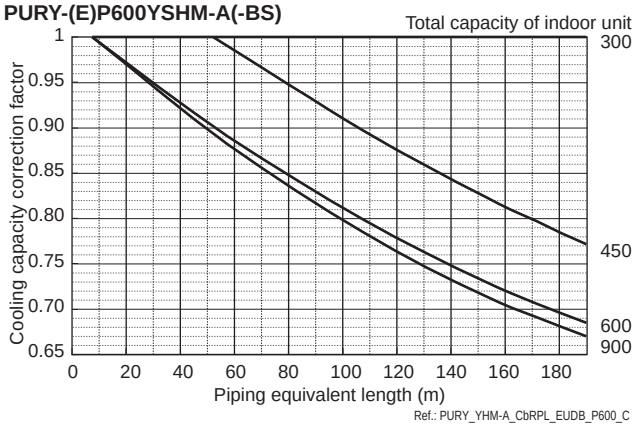

PURY-P750YSHM-A(-BS)

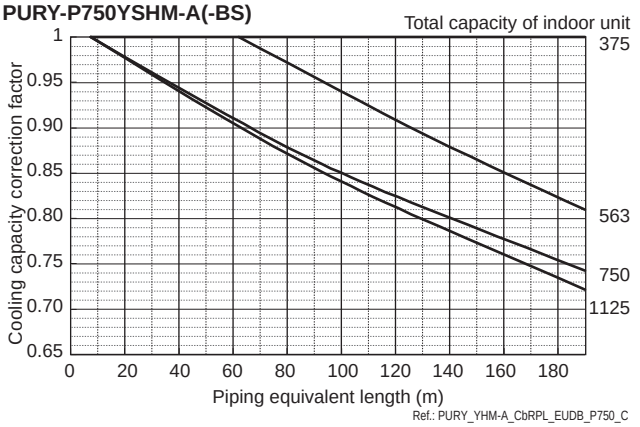

PURY-P650YSHM-A(-BS)

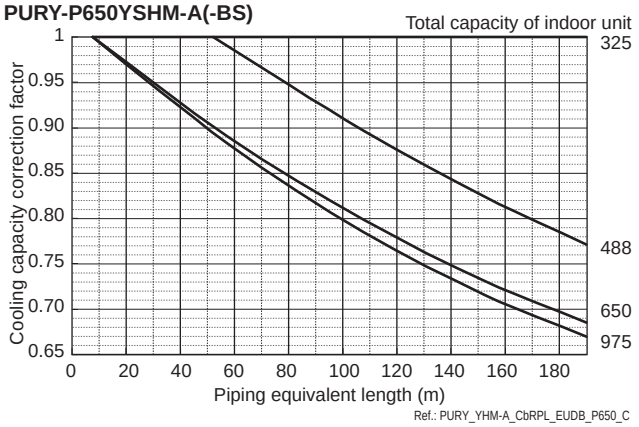

PURY-P800YSHM-A(-BS)

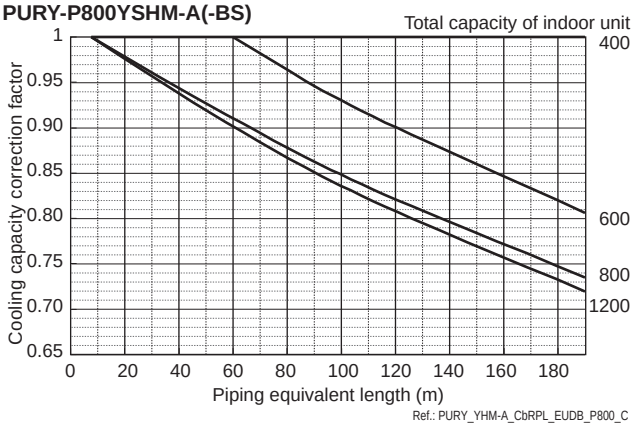

PURY-P700YSHM-A(-BS)

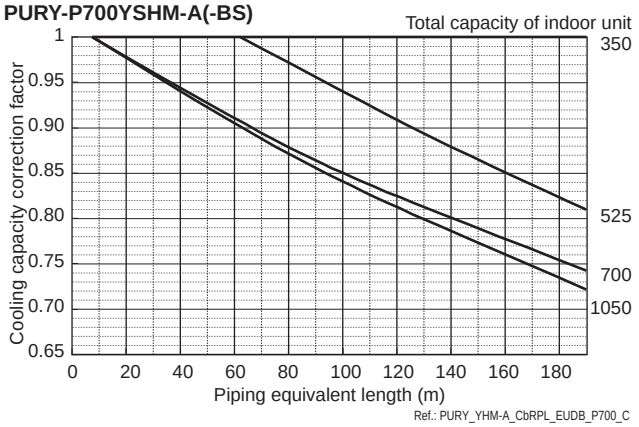

R2

6-3-2. Heating capacity correction

PURY-(E)P200YHM-A(-BS)

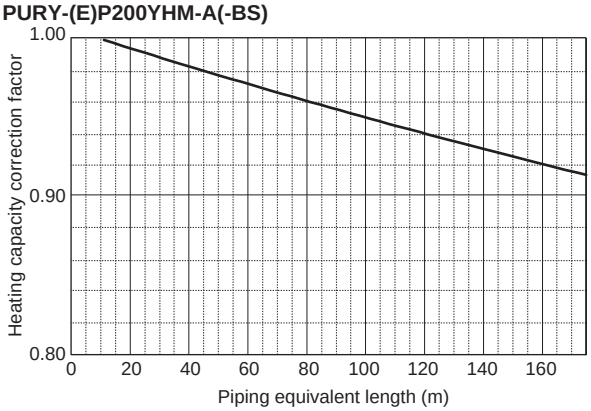

Ref.: PURY_YHM-A_CbRPL_EUDB_P200_H

PURY-(E)P450,500YSHM-A(1)(-BS)

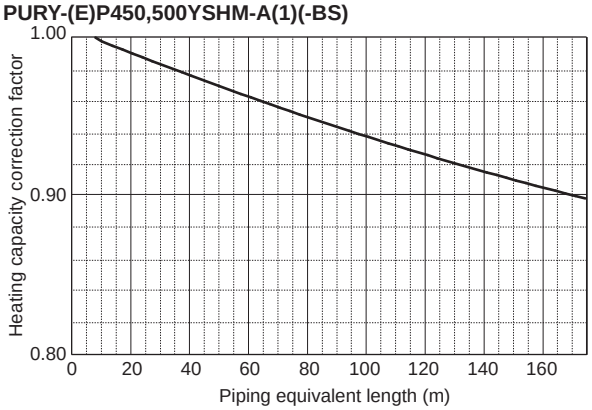

Ref.: PURY_YHM-A_CbRPL_EUDB_P450_H

PURY-(E)P250,300YHM-A(-BS)

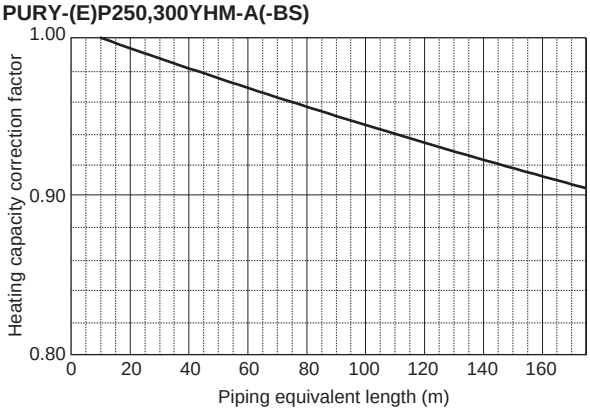

Ref.: PURY_YHM-A_CbRPL_EUDB_P250_H

PURY-(E)P550,600,650YSHM-A(1)(-BS)

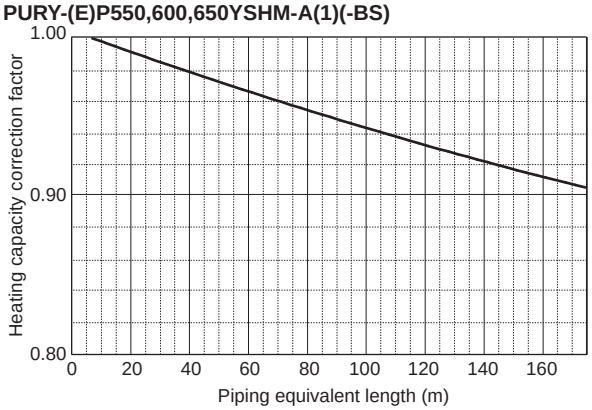

Ref.: PURY_YHM-A_CbRPL_EUDB_P550_H

PURY-P350YHM-A(-BS)

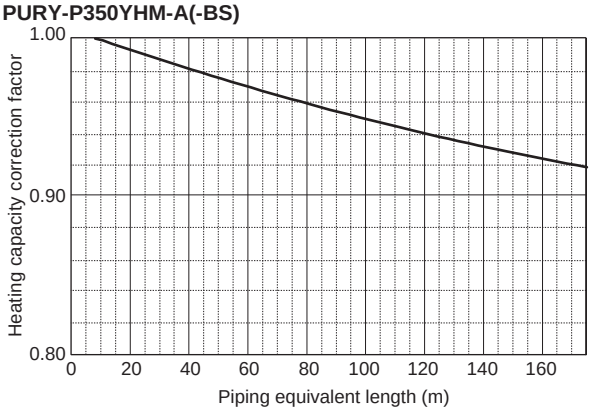

Ref.: PURY_YHM-A_CbRPL_EUDB_P350_H.

PURY-P700,750,800YSHM-A(-BS)

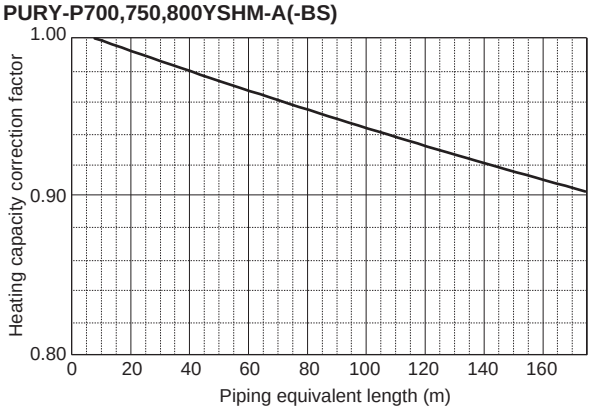

Ref.: PURY_YHM-A_CbRPL_EUDB_P700_H

PURY-(E)P400Y(S)HM-A(-BS)

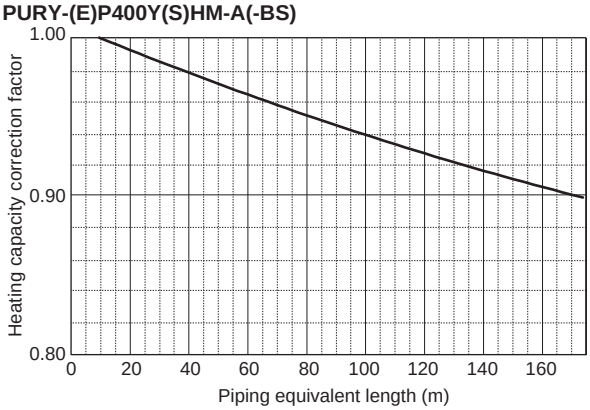

Ref.: PURY_YHM-A_CbRPL_EUDB_P400_H

R2

6-3-3. How to obtain the equivalent piping length

1 **PURY-(E)P200YHM-A(-BS)**
Equivalent length = (Actual piping length to the farthest indoor unit) + (0.35 x number of bends in the piping) m

2 **PURY-(E)P250,300YHM-A(-BS)**
Equivalent length = (Actual piping length to the farthest indoor unit) + (0.42 x number of bends in the piping) m

3 **PURY-P350YHM-A(-BS)**
Equivalent length = (Actual piping length to the farthest indoor unit) + (0.47 x number of bends in the piping) m

4 **PURY-(E)P400,450,500,550,600,650Y(S)HM-A(1)(-BS)**
Equivalent length = (Actual piping length to the farthest indoor unit) + (0.50 x number of bends in the piping) m

5 **PURY-P700,750,800YSHM-A(-BS)**
Equivalent length = (Actual piping length to the farthest indoor unit) + (0.70 x number of bends in the piping) m

Ref: PURY_YHM-A_EqPLTH_EUDB_ALL

6-4. Correction by port counts of the BC controller

Indoor unit sizes P200 and P250 must be connected to 2 ports on the BC controller.
Indoor unit sizes from P100 to P140 should normally be connected to 2 ports on the BC controller (set BC controller DIP-SW 4-6 to its ON position).
In cases whereby indoor unit sizes from P100 to P140 are connected to only 1port on the BC controller (set BC controller DIP-SW 4-6 to its OFF position), the cooling capacity of the indoor unit should be multiplied by a correction factor of **0.97.**

R2

6-5. Correction at frost and defrost

Due to frosting at the outdoor heat exchanger and the automatic defrosting operation, the heating capacity of the outdoor unit should be considered by multiplying the correction factor shown in the table below.

Table of correction factor at frosting and defrosting

Outdoor inlet air temp. °C	6	4	2	1	0	-2	-4	-6	-8	-10	-20
Outdoor inlet air temp. °F	43	39	36	34	32	28	25	21	18	14	-4
PURY-(E)P200YHM-A(-BS)	1.00	0.95	0.84	0.83	0.83	0.87	0.90	0.95	0.95	0.95	0.95
PURY-(E)P250YHM-A(-BS)	1.00	0.95	0.84	0.83	0.83	0.87	0.90	0.95	0.95	0.95	0.95
PURY-(E)P300YHM-A(-BS)	1.00	0.93	0.82	0.80	0.82	0.86	0.90	0.90	0.95	0.95	0.95
PURY-P350YHM-A(-BS)	1.00	0.93	0.85	0.83	0.84	0.86	0.90	0.90	0.95	0.95	0.95
PURY-(E)P400Y(S)HM-A(-BS)	1.00	0.95	0.90	0.87	0.88	0.89	0.90	0.95	0.95	0.95	0.95
PURY-(E)P450YSHM-A(1)(-BS)	1.00	0.98	0.89	0.87	0.89	0.90	0.92	0.95	0.95	0.95	0.95
PURY-(E)P500YSHM-A(-BS)	1.00	0.98	0.89	0.86	0.89	0.90	0.92	0.95	0.95	0.95	0.95
PURY-(E)P550YSHM-A(1)(-BS)	1.00	0.94	0.87	0.86	0.87	0.88	0.90	0.90	0.93	0.93	0.93
PURY-(E)P600YSHM-A(-BS)	1.00	0.94	0.84	0.86	0.87	0.88	0.90	0.90	0.93	0.93	0.93
PURY-P650YSHM-A(-BS)	1.00	0.94	0.84	0.86	0.87	0.88	0.90	0.90	0.93	0.93	0.93
PURY-P700YSHM-A(-BS)	1.00	0.98	0.89	0.88	0.89	0.90	0.92	0.95	0.95	0.95	0.95
PURY-P750YSHM-A(-BS)	1.00	0.98	0.89	0.88	0.89	0.90	0.92	0.95	0.95	0.95	0.95
PURY-P800YSHM-A(-BS)	1.00	0.98	0.89	0.88	0.89	0.90	0.92	0.95	0.95	0.95	0.95

Ref.: PURY_YHM-A_CbFROST_EUDB_ALL

6-6. Operation temperature range

• **Cooling**

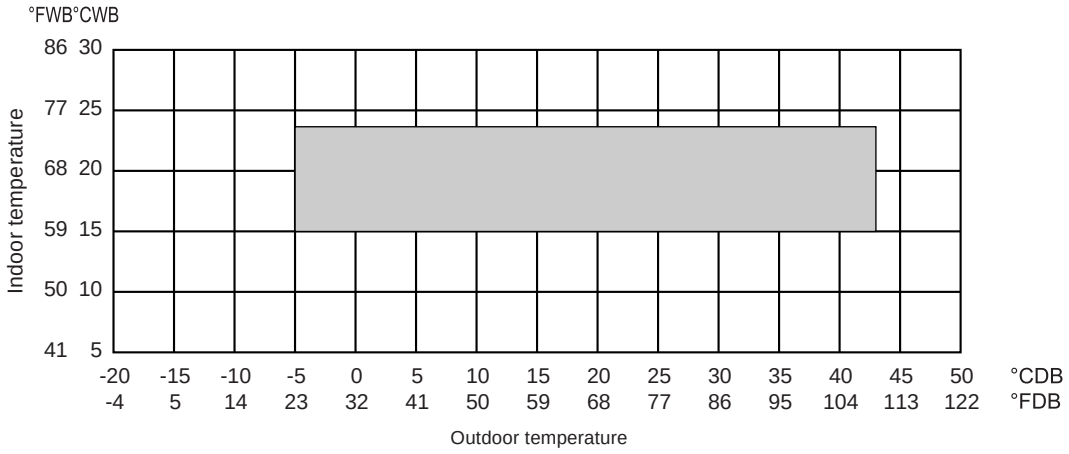

• **Heating**

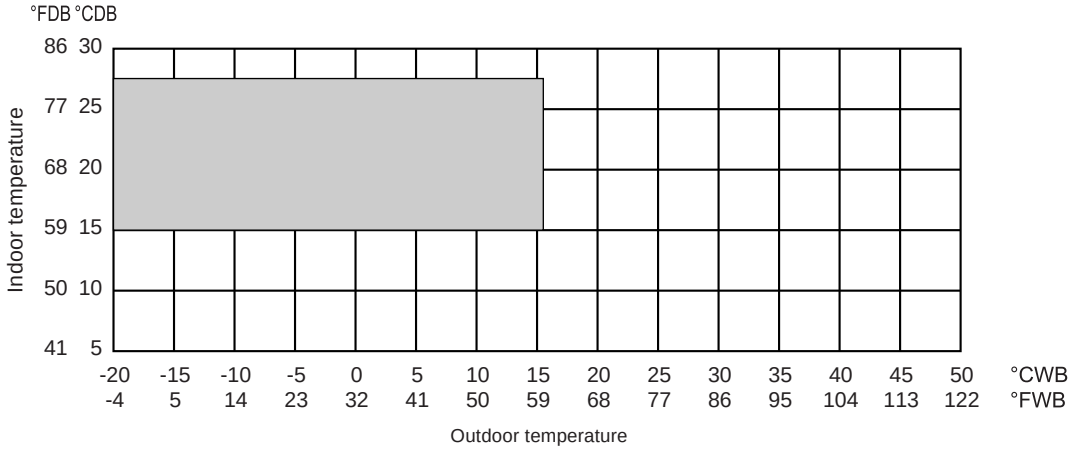

• **Combination of cooling/heating operation (Cooling main or Heating main)**

Outdoor temperature	Indoor temperature	
	Cooling	Heating
-5 to 21˚CDB (23 to 70˚FDB)	——	15 to 27˚CDB (59 to 81˚FDB)
-6 to 15.5˚CWB (21 to 60˚FWB)	15 to 24˚CWB (59 to 75˚FWB)	——

Ref.: PURY_YHM-A_TMPRNG_EUDB_ALL

R2

7-1. JOINT

Piping for CITY MULTI can be easily done with Joints and headers provided by MITSUBISHI ELECTRIC CORP..
There are 3 sets of Joints selectable for piping. Details for applying the Joint sets are referable to System Design 3, or their own Installation Manual.

CMY-Y102S-G2

Ref.: CMY_Y102S_G2_EXD_EUDB_SI
mm

For Gas pipe:

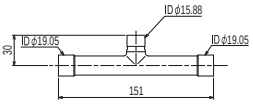

<Deformed pipe(Accessory)>

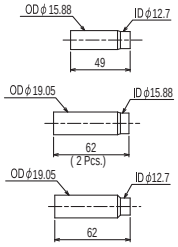

For Liquid pipe:

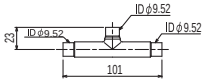

<Deformed pipe(Accessory)>

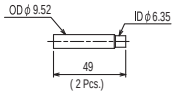

ID: Inner Diameter OD: Outer Diameter

CMY-Y102L-G2

Ref.: CMY_Y102L_G2_EXD_EUDB_SI
mm

For Gas pipe:

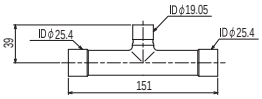

<Deformed pipe(Accessory)>

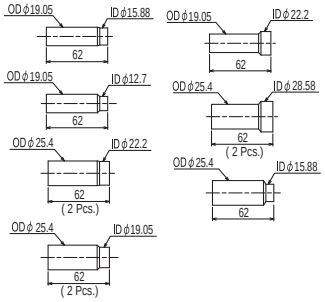

For Liquid pipe:

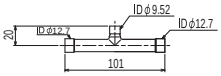

<Deformed pipe(Accessory)>

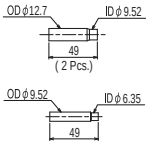

ID: Inner Diameter OD: Outer Diameter

CMY-Y202-G2

Ref.: CMY_Y202_G2_EXD_EUDB_SI
mm

For Gas pipe:

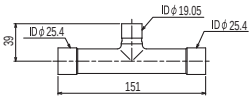

<Deformed pipe(Accessory)>

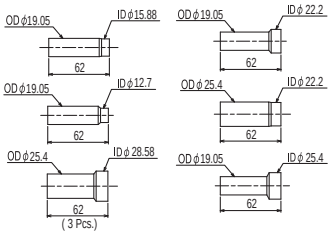

For Liquid pipe:

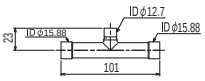

<Deformed pipe(Accessory)>

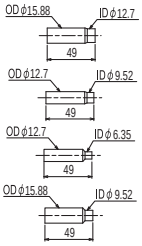

ID: Inner Diameter OD: Outer Diameter

R2

7-2. OUTDOOR TWINNING KIT

For PURY-(E)P-YSHM-A, following optional Outdoor Twinning Kit is needed to use to combine to refrigerant flows of its PURY-(E)P-YHM-A. Details of selecting the proper kit should be referred to the System Design Section.

CMY-R100VBK

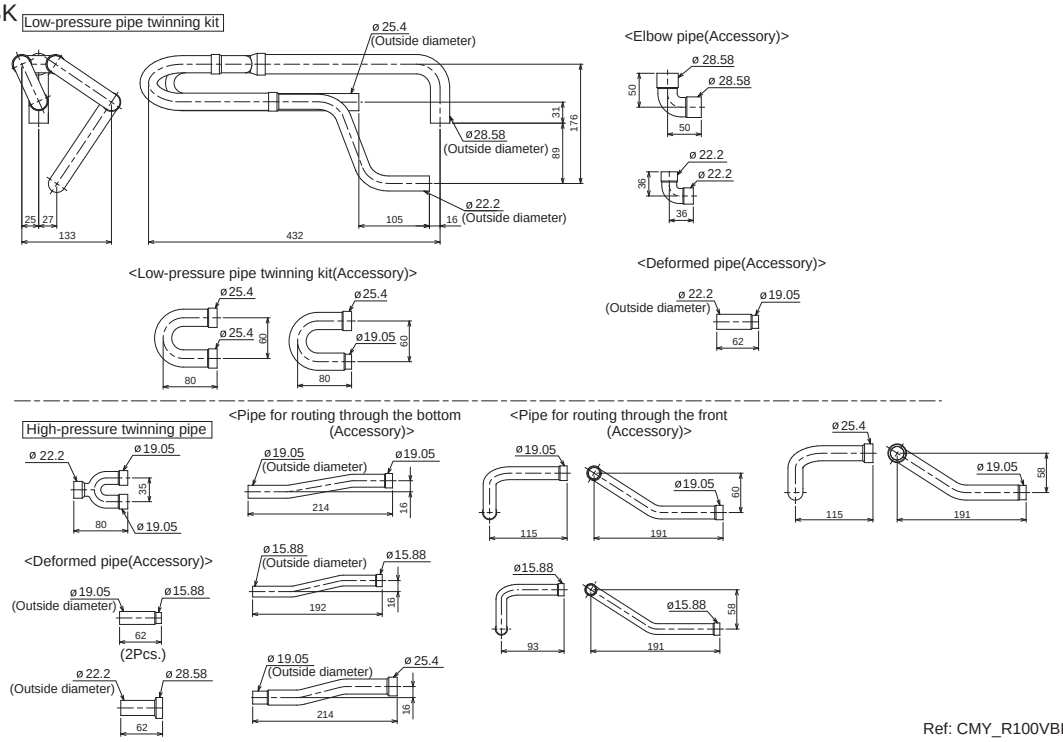

Ref: CMY_R100VBK_EXD_EUDB_SI

CMY-R200VBK

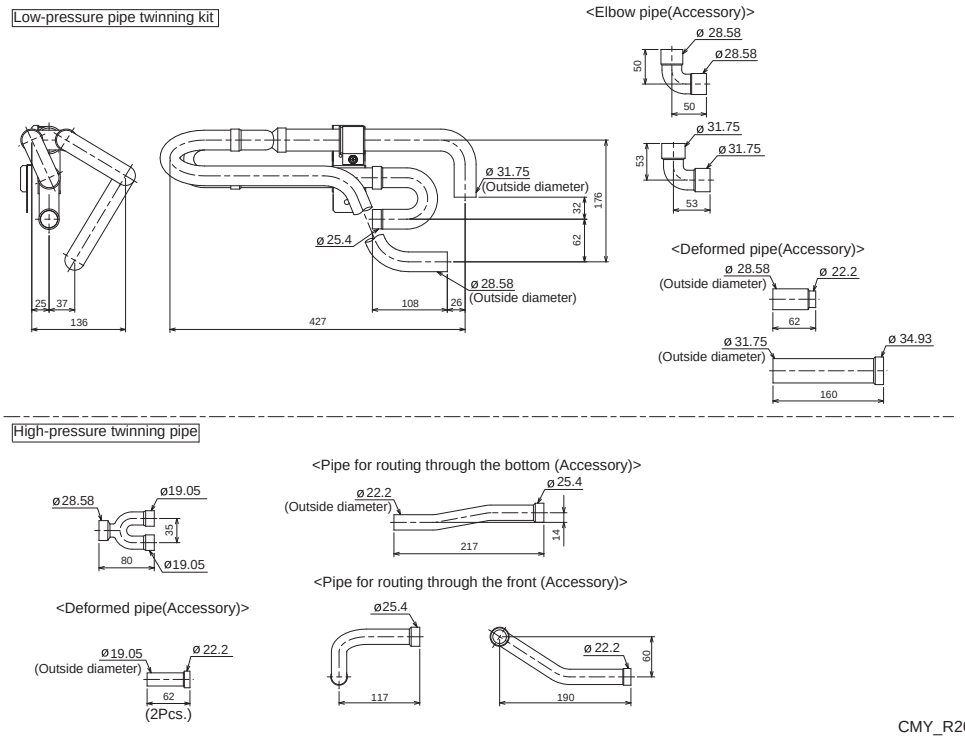

CMY_R200VBK_EXD_EUDB_SI

Note 1. Reference the attitude angle of the branch pipe below the fig.

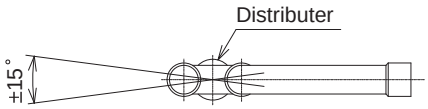

The angle of the branch pipe for hign pressure is within ±15° against the horizontal plane.

2. Use the attached pipe to braze the port-opening of the distributer.
3. Pipe diameter is indicated by inside diameter.

7-3. JOINT KIT CMY-R160-J1 FOR BC CONTROLLER

Joint kit "CMY-R160-J1" for BC controller is used to combine 2 ports of the BC controller at a PURY-(E)P-Y(S)HM-A system so as to enable down-stream Indoor capacity above P80 as shown in Fig. 1.

The Joint kit include following items:

①Instruction	②Joint pipe(Small)	③Joint pipe(Large)	④Cover 1	⑤Cover 2	⑥Cover 3	⑦Band	⑧Reducer 1	⑨Reducer 2
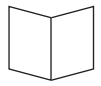			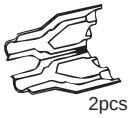	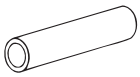		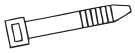	OD19.05-ID22.2 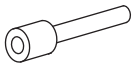	OD19.05-ID15.88 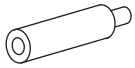
This sheet 1pc	1pc	1pc	2pcs	1pc for gas side	1pc for liquid side	8pcs	1pc	1pc

Please prepare the following items in the field. ①Tape for insulation material sealing ②Extension pipe for refrigerant circuit Ref.: WT05840X01_01

②Joint pipe (for liquid side) ③Joint pipe (for gas side) mm(in.)

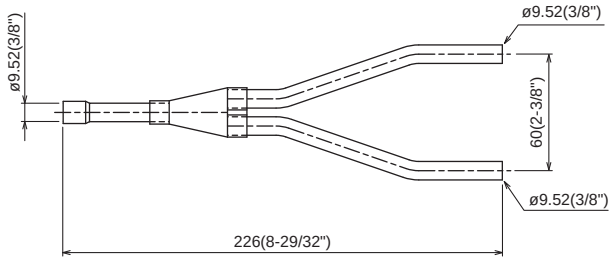

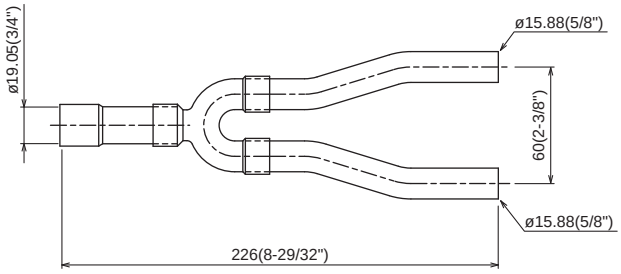

1. Designing CMY-R160-J1 to a PURY-(E)P-Y(S)HM-A system

The maximum down-stream Indoor capacity for 1 port of BC controller is P80. When the down-stream Indoor capacity is above P80, Joint kit CMY-R160-J1 is needed to combined 2 ports of BC controller to enlarge the capacity, like Group 2 and 3 in Fig. 1.

Maximum 3 Indoor units are allowed to connect to 1 port of BC controller or 2 combined ports of BC controller using CMY-R160-J1.

When connecting Indoor units to 1 port of BC controller or 2 combined ports of BC controller using CMY-R160-J1 or CMY-Y102S-G2 is applicable, like Group 1 and 2 in Fig. 1

Caution: Mixed cooling and heating mode at the same time for Indoor units connecting to 1 port or 2 combined ports is not available.

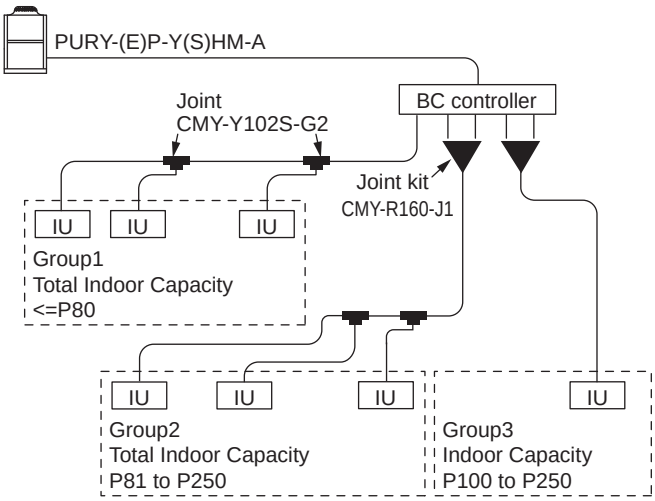

Fig.1. CMY-R160-J1 applying scheme Ref.: WT05840X01_02

2. Piping at the installation site

The connection of CMY-R160-J1 to BC controller and pipe leading to Indoor units is referable to Fig. 2. Non-oxidized brazing is necessary. All piping must be careful to avoid foreign material getting inside.

After piping and air-tight testing, insulation work to the Joint and pipe should be done. Details is available at the Installation Manual.

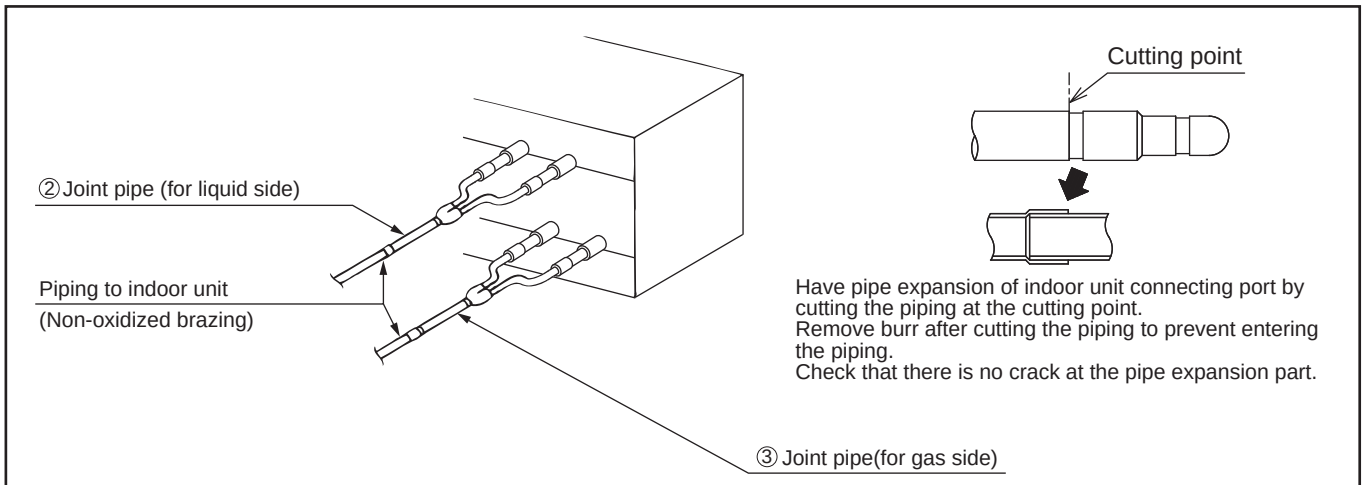

Fig.2. Connecting CMY-R160-J1 Ref.: WT05840X01_03

Ref: CMY_R160_J_DOC_EUDB

OUTDOOR UNITS

1. SPECIFICATIONS ..... 2 - 194
2. EXTERNAL DIMENSIONS ..... 2 - 201
3. CENTER OF GRAVITY ..... 2 - 208
4. ELECTRICAL WIRING DIAGRAMS ..... 2 - 209
5. SOUND LEVELS ..... 2 - 210
6. CAPACITY TABLES ..... 2 - 213
   6-1. Correction by temperature ..... 2 - 213
   6-2. Correction by total indoor ..... 2 - 216
   6-3. Correction by refrigerant piping length ..... 2 - 218
   6-4. Correction by port counts of the BC controller ..... 2 - 221
   6-5. Correction at frost and defrost ..... 2 - 221
   6-6. Operation temperature range ..... 2 - 222
7. OPTIONAL PARTS ..... 2 - 223
   7-1. JOINT ..... 2 - 223
   7-2. OUTDOOR TWINNING KIT ..... 2 - 224
   7-3. JOINT KIT CMY-R160-J1 FOR BC CONTROLLER ..... 2 - 225

1. SPECIFICATIONS

Model			PURY-EP200YHM-A(-BS)	PURY-EP250YHM-A(-BS)
Power source			3-phase 4-wire 380-400-415V 50/60Hz	
Cooling capacity (Nominal)	*1	kW	22.4	28.0
	*1	kcal / h	19,300	24,100
	*1	Btu / h	76,400	95,500
	*2	kcal / h	20,000	25,000
	Power input	kW	5.23	6.86
	Current input	A	8.8-8.3-8.0	11.5-11.0-10.6
	COP	kW / kW	4.28	4.08
Temp. range of cooling *4	Indoor	W.B.	15 to 24degC(59 to 75degF)	
	Outdoor	D.B.	-5 to 43degC(23 to 109degF)	
Heating capacity (Nominal)	*3	kW	25.0	31.5
	*3	kcal / h	21,500	27,100
	*3	Btu / h	85,300	107,500
	Power input	kW	5.81	7.60
	Current input	A	9.8-9.3-8.9	12.8-12.1-11.7
	COP	kW / kW	4.30	4.14
Temp. range of heating *4	Indoor temp.	D.B.	15 to 27degC(59 to 81degF)	
	Outdoor temp.	W.B.	-20 to 15.5degC(-4 to 60degF)	
Indoor unit connectable	Total capacity		50 to 150 % of outdoor unit capacity	
	Model / Quantity		P15 to P250 / 1 to 20	P15 to P250 / 1 to 25
Sound pressure level (measured in anechoic room)		dB <A>	57.0	60.0
Diameter of refrigerant pipe	High pressure	mm(in.)	15.88(5/8) Brazed	19.05(3/4) Brazed
	Low pressure	mm(in.)	19.05(3/4) Brazed	22.2(7/8) Brazed
External finish			Pre-coated galvanized steel sheet (+powder coating for -BS type) <MUNSELL 5Y 8/1>	
External dimension HxWxD		mm	1,710(1,650 without legs) x 920 x 760	1,710(1,650 without legs) x 1,220 x 760
		in.	67-3/8(65 without legs) x 36-1/4 x 29-15/16	67-3/8(65 without legs) x 48-1/16 x 29-15/16
Net weight		kg(lb)	235(518)	265(584)
Heat exchanger			Salt-resistant cross fin & copper tube	
Compressor	Type		Inverter scroll hermetic compressor	
	Manufacture		AC&R Works, MITSUBISHI ELECTRIC CORPORATION	
	Starting method		Inverter	
	Motor output	kW	5.4	6.7
	Case heater	kW	0.035(240 V)	0.045(240 V)
	Lubricant		MEL32	
FAN	Air flow rate	m^3 / min	185	225
		L/s	3,083	3,750
		cfm	6,532	7,945
	External static press.	*5	0 Pa (0 mmH_2O)	
	Type x Quantity		Propeller fan x 1	
	Control, Driving mechanism		Inverter-control, Direct-driven by motor	
	Motor output	kW	0.92	
HIC circuit (HIC: Heat Inter-Changer)			-	
Protection	High pressure protection		High pressure sensor, High pressure switch at 4.15MPa (601 psi)	
	Inverter circuit (COMP. / FAN)		Over-heat protection, Over-current protection	
	Compressor		Over-heat protection	
	Fan motor		Thermal switch	
Defrosting method			Auto-defrost mode (Reversed refrigerant circle)	
Refrigerant	Type x original charge		R410A x 10.5kg (24lb)	R410A x 11.8kg (26lb)
	Control		Indoor LEV and BC controller	
Drawing	External		WKB94G547	WKB94T266
	Wiring		WKB94C141	WKB94C320
Standard attachment	Document		Installation Manual	
	Accessory		Details refer to External Drw	
Optional parts			joint: CMY-Y102S-G2, CMY-Y102L-G2, CMY-R160-J1 BC controller: CMB-P104, 105, 106, 108, 1010, 1013, 1016V-G1 Main BC controller: CMB-P108, 1010, 1013, 1016V-GA1 Sub BC controller: CMB-P104, 108V-GB1, CMB-P1016V-HB1	
Remarks			* Details on foundation work, duct work, insulation work, electrical wiring, power source switch, and other items shall be referred to the Installation Manual. * Due to continuing improvement, above specifications may be subject to change without notice.	

Notes :	*1 Nominal cooling conditions	*2 Nominal cooling conditions	*3 Nominal heating conditions
Indoor :	27degCDB/19degCWB (81degFDB/66degFWB)	27degCDB/19.5degCWB (81degFDB/67degFWB)	20degCDB (68degFDB)
Outdoor :	35degCDB (95degFDB)	35degCDB (95degFDB)	7degCDB/6degCWB (45degFDB/43degFWB)
Pipe length :	7.5m(24-9/16ft.)	5m(16-3/8ft.)	7.5m(24-9/16ft.)
Level difference :	0m(0ft.)	0m(0ft.)	0m(0ft.)

*4 -5degC(23degF)DB/-6degC(21degF)WB to 21degC(70degF)DB/15.5degC(60degF)WB with cooling/heating mixed operation.

* Nominal condition *1, *3 are subject to JIS B8615-1

*5 External static pressure option is available (30Pa, 60Pa/3.1mmH_2O, 6.1mmH_2O)

Unit converter	
kcal	=kW x 860
Btu/h	=kW x 3,412
cfm	=m^3/min x 35.31
lb	=kg / 0.4536

*Above specification data is subject to rounding variation.

R2(HIGH COP)

1. SPECIFICATIONS

Model			PURY-EP300YHM-A(-BS)
Power source			3-phase 4-wire 380-400-415V 50/60Hz
Cooling capacity (Nominal)	*1	kW	33.5
	*1	kcal / h	28,800
	*1	Btu / h	114,300
	*2	kcal / h	30,000
	Power input	kW	8.33
	Current input	A	14.0-13.3-12.8
	COP	kW / kW	4.02
Temp. range of cooling *4	Indoor	W.B.	15 to 24degC(59 to 75degF)
	Outdoor	D.B.	-5 to 43degC(23 to 109degF)
Heating capacity (Nominal)	*3	kW	37.5
	*3	kcal / h	32,300
	*3	Btu / h	128,000
	Power input	kW	9.37
	Current input	A	15.8-15.0-14.4
	COP	kW / kW	4.00
Temp. range of heating *4	Indoor temp.	D.B.	15 to 27degC(59 to 81degF)
	Outdoor temp.	W.B.	-20 to 15.5degC(-4 to 60degF)
Indoor unit connectable	Total capacity		50 to 150 % of outdoor unit capacity
	Model / Quantity		P15 to P250 / 1 to 30
Sound pressure level (measured in anechoic room)		dB <A>	60
Diameter of refrigerant pipe	High pressure	mm(in.)	19.05(3/4) Brazed
	Low pressure	mm(in.)	22.2(7/8) Brazed
External finish			Pre-coated galvanized steel sheet (+powder coating for -BS type) <MUNSELL 5Y 8/1>
External dimension HxWxD		mm	1,710(1,650 without legs) x 1,220 x 760
		in.	67-3/8(65 without legs) x 48-1/16 x 29-15/16
Net weight		kg(lb)	265(584)
Heat exchanger			Salt-resistant cross fin & copper tube
Compressor	Type		Inverter scroll hermetic compressor
	Manufacture		AC&R Works, MITSUBISHI ELECTRIC CORPORATION
	Starting method		Inverter
	Motor output	kW	8.0
	Case heater	kW	0.045(240 V)
	Lubricant		MEL32
FAN	Air flow rate	m^3 / min	225
		L/s	3,750
		cfm	7,945
	External static press.	*5	0 Pa (0 mmH_2O)
	Type x Quantity		Propeller fan x 1
	Control, Driving mechanism		Inverter-control, Direct-driven by motor
	Motor output	kW	0.92
HIC circuit (HIC: Heat Inter-Changer)			-
Protection	High pressure protection		High pressure sensor, High pressure switch at 4.15MPa (601 psi)
	Inverter circuit (COMP. / FAN)		Over-heat protection, Over-current protection
	Compressor		Over-heat protection
	Fan motor		Thermal switch
Defrosting method			Auto-defrost mode (Reversed refrigerant circle)
Refrigerant	Type x original charge		R410A x 11.8kg (26lb)
	Control		Indoor LEV and BC controller
Drawing	External		WKB94T266
	Wiring		WKE94C141
Standard attachment	Document		Installation Manual
	Accessory		Details refer to External Drw
Optional parts			joint: CMY-Y102S-G2, CMY-Y102L-G2, CMY-R160-J1 BC controller: CMB-P104, 105, 106, 108, 1010, 1013, 1016V-G1 Main BC controller: CMB-P108, 1010, 1013, 1016V-GA1 Sub BC controller: CMB-P104, 108V-GB1, CMB-P1016V-HB1
Remarks			* Details on foundation work, duct work, insulation work, electrical wiring, power source switch, and other items shall be referred to the Installation Manual. * Due to continuing improvement, above specifications may be subject to change without notice.

Notes :

	*1 Nominal cooling conditions	*2 Nominal cooling conditions	*3 Nominal heating conditions
Indoor :	27degCDB/19degCWB (81degFDB/66degFWB)	27degCDB/19.5degCWB (81degFDB/67degFWB)	20degCDB (68degFDB)
Outdoor :	35degCDB (95degFDB)	35degCDB (95degFDB)	7degCDB/6degCWB (45degFDB/43degFWB)
Pipe length :	7.5m(24-9/16ft.)	5m(16-3/8ft.)	7.5m(24-9/16ft.)
Level difference :	0m(0ft.)	0m(0ft.)	0m(0ft.)

*4 -5degC(23degF)DB/-6degC(21degF)WB to 21degC(70degF)DB/15.5degC(60degF)WB with cooling/heating mixed operation.

* Nominal condition *1, *3 are subject to JIS B8615-1

*5 External static pressure option is available (30Pa, 60Pa/3.1mmH_2O, 6.1mmH_2O)

Unit converter	
kcal	=kW x 860
Btu/h	=kW x 3,412
cfm	=m^3/min x 35.31
lb	=kg / 0.4536

*Above specification data is subject to rounding variation.

R2(HIGH

1. SPECIFICATIONS

Model			PURY-EP400YSHM-A(-BS)
Power source			3-phase 4-wire 380-400-415V 50/60Hz
Cooling capacity (Nominal)	*1	kW	45.0
	*1	kcal / h	38,700
	*1	Btu / h	153,500
	*2	kcal / h	40,000
	Power input	kW	10.57
	Current input	A	17.8-16.9-16.3
	COP	kW / kW	4.25
Temp. range of cooling *4	Indoor	W.B.	15 to 24degC(59 to 75degF)
	Outdoor	D.B.	-5 to 43degC(23 to 109degF)
Heating capacity (Nominal)	*3	kW	50.0
	*3	kcal / h	43,000
	*3	Btu / h	170,600
	Power input	kW	11.73
	Current input	A	19.8-18.8-18.1
	COP	kW / kW	4.26
Temp. range of heating *4	Indoor temp.	D.B.	15 to 27degC(59 to 81degF)
	Outdoor temp.	W.B.	-20 to 15.5degC(-4 to 60degF)
Indoor unit connectable	Total capacity		50 to 150 % of outdoor unit capacity
	Model / Quantity		P15 to P250 / 1 to 40
Sound pressure level (measured in anechoic room)		dB <A>	60.0
Diameter of refrigerant pipe	High pressure	mm(in.)	22.2(7/8) Brazed
	Low pressure	mm(in.)	28.58(1-1/8) Brazed

Set Model

Model			PURY-EP200YHM-A(-BS)	PURY-EP200YHM-A(-BS)
External finish			Pre-coated galvanized steel sheet (+powder coating for -BS type)<MUNSELL 5Y 8/1>	
External dimension HxWxD		mm	1,710(1,650 without legs) x 920 x 760	1,710(1,650 without legs) x 920 x 760
		in.	67-3/8(65 without legs) x 36-1/4 x 29-15/16	67-3/8(65 without legs) x 36-1/4 x 29-15/16
Net weight		kg(lb)	235(518)	235(518)
Heat exchanger			Salt-resistant cross fin & copper tube	Salt-resistant cross fin & copper tube
Compressor	Type		Inverter scroll hermetic compressor	
	Manufacture		AC&R Works, MITSUBISHI ELECTRIC CORPORATION	
	Starting method		Inverter	Inverter
	Motor output	kW	5.4	5.4
	Case heater	kW	0.035(240 V)	0.035(240 V)
	Lubricant		MEL32	MEL32
FAN	Air flow rate	m^3 / min	185	185
		L/s	3,083	3,083
		cfm	6,532	6,532
	External static press.	*5	0 Pa (0 mmH_2O)	0 Pa (0 mmH_2O)
	Type x Quantity		Propeller fan x 1	Propeller fan x 1
	Control, Driving mechanism		Inverter-control, Direct-driven by motor	Inverter-control, Direct-driven by motor
	Motor output	kW	0.92	0.92
HIC circuit (HIC: Heat Inter-Changer)			-	
Protection	High pressure protection		High pressure sensor, High pressure switch at 4.15MPa (601 psi)	
	Inverter circuit (COMP. / FAN)		Over-heat protection, Over-current protection	
	Compressor		Over-heat protection	
	Fan motor		Thermal switch	
Defrosting method			Auto-defrost mode (Reversed refrigerant circle)	
Refrigerant	Type x original charge		R410A x 10.5kg (24lb)	R410A x 10.5kg (24lb)
	Control		Indoor LEV and BC controller	
Pipe between unit and distributor	High pressure	mm(in.)	15.88(5/8)Brazed	15.88(5/8)Brazed
	Low pressure	mm(in.)	19.05(3/4)Brazed	19.05(3/4)Brazed
Drawing	External		WKB94T267	
	Wiring		WKE94C141	
Standard attachment	Document		Installation Manual	
	Accessory		Details refer to External Drw	
Optional parts			Outdoor Twinning kit: CMY-R100VBK1 joint: CMY-Y102S-G2, CMY-Y102L-G2, CMY-Y202-G2, CMY-R160-J1 Main BC controller: CMB-P108, 1010, 1013, 1016V-GA1 Sub BC controller: CMB-P104, 108V-GB1, CMB-P1016V-HB1	
Remarks			* Details on foundation work, duct work, insulation work, electrical wiring, power source switch, and other items shall be referred to the Installation Manual. * Systems with considerably long pipe runs, in heating mode, may be subject to slightly louder than normal noise from the outdoor unit/s. * The outdoor twinning kit(low pressure) should be connected to the low pressure side of the outdoor unit. If the connected units are of different capacities, the outdoor twinning kit(low pressure) should be installed in the unit with the largest capacity. * Due to continuing improvement, above specifications may be subject to change without notice.	

Notes :	*1 Nominal cooling conditions	*2 Nominal cooling conditions	*3 Nominal heating conditions
Indoor :	27degCDB/19degCWB (81degFDB/66degFWB)	27degCDB/19.5degCWB (81degFDB/67degFWB)	20degCDB (68degFDB)
Outdoor :	35degCDB (95degFDB)	35degCDB (95degFDB)	7degCDB/6degCWB (45degFDB/43degFWB)
Pipe length :	7.5m(24-9/16ft.)	5m(16-3/8ft.)	7.5m(24-9/16ft.)
Level difference :	0m(0ft.)	0m(0ft.)	0m(0ft.)

*4 -5degC(23degF)DB/-6degC(21degF)WB to 21degC(70degF)DB/15.5degC(60degF)WB with cooling/heating mixed operation.

* Nominal condition *1, *3 are subject to JIS B8615-1

*5 External static pressure option is available (30Pa, 60Pa/3.1mmH_2O, 6.1mmH_2O)

Unit converter	
kcal	=kW x 860
Btu/h	=kW x 3,412
cfm	=m^3/min x 35.31
lb	=kg / 0.4536

*Above specification data is subject to rounding variation.

R2(HIGH COP)

Model			PURY-EP450YSHM-A1(-BS)
Power source			3-phase 4-wire 380-400-415V 50/60Hz
Cooling capacity (Nominal)	*1	kW	50.0
	*1	kcal / h	43,000
	*1	Btu / h	170,600
	*2	kcal / h	45,000
	Power input	kW	12.07
	Current input	A	20.3-19.3-18.6
	COP	kW / kW	4.14
Temp. range of cooling *4	Indoor	W.B.	15 to 24degC(59 to 75degF)
	Outdoor	D.B.	-5 to 43degC(23 to 109degF)
Heating capacity (Nominal)	*3	kW	56.0
	*3	kcal / h	48,200
	*3	Btu / h	191,100
	Power input	kW	13.23
	Current input	A	22.3-21.2-20.4
	COP	kW / kW	4.23
Temp. range of heating *4	Indoor temp.	D.B.	15 to 27degC(59 to 81degF)
	Outdoor temp.	W.B.	-20 to 15.5degC(-4 to 60degF)
Indoor unit connectable	Total capacity		50 to 150 % of outdoor unit capacity
	Model / Quantity		P15 to P250 / 1 to 45
Sound pressure level (measured in anechoic room)		dB <A>	62
Diameter of refrigerant pipe	High pressure	mm(in.)	22.2(7/8) Brazed
	Low pressure	mm(in.)	28.58(1-1/8) Brazed

Set Model

Model			PURY-EP200YHM-A(-BS)	PURY-EP250YHM-A(-BS)
External finish			Pre-coated galvanized steel sheet (+powder coating for -BS type)<MUNSELL 5Y 8/1>	
External dimension HxWxD		mm	1,710(1,650 without legs) x 920 x 760	1,710(1,650 without legs) x 1,220 x 760
		in.	67-3/8(65 without legs) x 36-1/4 x 29-15/16	67-3/8(65 without legs) x 48-1/16 x 29-15/16
Net weight		kg(lb)	235(518)	265(584)
Heat exchanger			Salt-resistant cross fin & copper tube	Salt-resistant cross fin & copper tube
Compressor	Type		Inverter scroll hermetic compressor	
	Manufacture		AC&R Works, MITSUBISHI ELECTRIC CORPORATION	
	Starting method		Inverter	Inverter
	Motor output	kW	5.4	6.7
	Case heater	kW	0.035(240 V)	0.045(240 V)
	Lubricant		MEL32	MEL32
FAN	Air flow rate	m^3 / min	185	225
		L/s	3,083	3,750
		cfm	6,532	7,945
	External static press.	*5	0 Pa (0 mmH_2O)	0 Pa (0 mmH_2O)
	Type x Quantity		Propeller fan x 1	Propeller fan x 1
	Control, Driving mechanism		Inverter-control, Direct-driven by motor	Inverter-control, Direct-driven by motor
	Motor output	kW	0.92	0.92
HIC circuit (HIC: Heat Inter-Changer)			-	
Protection	High pressure protection		High pressure sensor, High pressure switch at 4.15MPa (601 psi)	
	Inverter circuit (COMP. / FAN)		Over-heat protection, Over-current protection	
	Compressor		Over-heat protection	
	Fan motor		Thermal switch	
Defrosting method			Auto-defrost mode (Reversed refrigerant circle)	
Refrigerant	Type x original charge		R410A x 10.5kg (24lb)	R410A x 11.8kg (26lb)
	Control		Indoor LEV and BC controller	
Pipe between unit and distributor	High pressure	mm(in.)	15.88(5/8)Brazed	19.05(3/4)Brazed
	Low pressure	mm(in.)	19.05(3/4)Brazed	22.2(7/8)Brazed
Drawing	External		WKB94T268	
	Wiring		WKE94C141	WKE94C320
Standard attachment	Document		Installation Manual	
	Accessory		Details refer to External Drw	
Optional parts			Outdoor Twinning kit: CMY-R100VBK joint: CMY-Y102S-G2, CMY-Y102L-G2, CMY-Y202-G2, CMY-R160-J1 Main BC controller: CMB-P108, 1010, 1013, 1016V-GA1 Sub BC controller: CMB-P104, 108V-GB1, CMB-P1016V-HB1	
Remarks			* Details on foundation work, duct work, insulation work, electrical wiring, power source switch, and other items shall be referred to the Installation Manual. * Systems with considerably long pipe runs, in heating mode, may be subject to slightly louder than normal noise from the outdoor unit/s. * The outdoor twinning kit(low pressure) should be connected to the low pressure side of the outdoor unit. If the connected units are of different capacities, the outdoor twinning kit(low pressure) should be installed in the unit with the largest capacity. * Due to continuing improvement, above specifications may be subject to change without notice.	

Notes :	*1 Nominal cooling conditions	*2 Nominal cooling conditions	*3 Nominal heating conditions
Indoor :	27degCDB/19degCWB (81degFDB/66degFWB)	27degCDB/19.5degCWB (81degFDB/67degFWB)	20degCDB (68degFDB)
Outdoor :	35degCDB (95degFDB)	35degCDB (95degFDB)	7degCDB/6degCWB (45degFDB/43degFWB)
Pipe length :	7.5m(24-9/16ft.)	5m(16-3/8ft.)	7.5m(24-9/16ft.)
Level difference :	0m(0ft.)	0m(0ft.)	0m(0ft.)

*4 -5degC(23degF)DB/-6degC(21degF)WB to 21degC(70degF)DB/15.5degC(60degF)WB with cooling/heating mixed operation.

* Nominal condition *1, *3 are subject to JIS B8615-1

*5 External static pressure option is available (30Pa, 60Pa/3.1mmH_2O, 6.1mmH_2O)

Unit converter	
kcal	=kW x 860
Btu/h	=kW x 3,412
cfm	=m^3/min x 35.31
lb	=kg / 0.4536

*Above specification data is subject to rounding variation.

R2(HIGH

1. SPECIFICATIONS

Model			PURY-EP500YSHM-A(-BS)
Power source			3-phase 4-wire 380-400-415V 50/60Hz
Cooling capacity (Nominal)	*1	kW	56.0
	*1	kcal / h	48,200
	*1	Btu / h	191,100
	*2	kcal / h	50,000
	Power input	kW	13.70
	Current input	A	23.1-21.9-21.1
	COP	kW / kW	4.08
Temp. range of cooling *4	Indoor	W.B.	15 to 24degC(59 to 75degF)
	Outdoor	D.B.	-5 to 43degC(23 to 109degF)
Heating capacity (Nominal)	*3	kW	63.0
	*3	kcal / h	54,200
	*3	Btu / h	215,000
	Power input	kW	15.33
	Current input	A	25.8-24.5-23.6
	COP	kW / kW	4.10
Temp. range of heating *4	Indoor temp.	D.B.	15 to 27degC(59 to 81degF)
	Outdoor temp.	W.B.	-20 to 15.5degC(-4 to 60degF)
Indoor unit connectable	Total capacity		50 to 150 % of outdoor unit capacity
	Model / Quantity		P15 to P250 / 1 to 50 (Connectable branch pipe number is max. 48.)
Sound pressure level (measured in anechoic room)		dB <A>	62
Diameter of refrigerant pipe	High pressure	mm(in.)	22.2(7/8) Brazed
	Low pressure	mm(in.)	28.58(1-1/8) Brazed

Set Model

Model			PURY-EP200YHM-A(-BS)	PURY-EP300YHM-A(-BS)
External finish			Pre-coated galvanized steel sheet (+powder coating for -BS type)<MUNSELL 5Y 8/1>	
External dimension HxWxD		mm	1,710(1,650 without legs) x 920 x 760	1,710(1,650 without legs) x 1,220 x 760
		in.	67-3/8(65 without legs) x 36-1/4 x 29-15/16	67-3/8(65 without legs) x 48-1/16 x 29-15/16
Net weight		kg(lb)	235(518)	265(584)
Heat exchanger			Salt-resistant cross fin & copper tube	Salt-resistant cross fin & copper tube
Compressor	Type		Inverter scroll hermetic compressor	
	Manufacture		AC&R Works, MITSUBISHI ELECTRIC CORPORATION	
	Starting method		Inverter	Inverter
	Motor output	kW	5.4	8.0
	Case heater	kW	0.035(240 V)	0.045(240 V)
	Lubricant		MEL32	MEL32
FAN	Air flow rate	m^3 / min	185	225
		L/s	3,083	3,750
		cfm	6,532	7,945
	External static press.	*5	0 Pa (0 mmH_2O)	0 Pa (0 mmH_2O)
	Type x Quantity		Propeller fan x 1	Propeller fan x 1
	Control, Driving mechanism		Inverter-control, Direct-driven by motor	Inverter-control, Direct-driven by motor
	Motor output	kW	0.92	0.92
HIC circuit (HIC: Heat Inter-Changer)			-	
Protection	High pressure protection		High pressure sensor, High pressure switch at 4.15MPa (601 psi)	
	Inverter circuit (COMP. / FAN)		Over-heat protection, Over-current protection	
	Compressor		Over-heat protection	
	Fan motor		Thermal switch	
Defrosting method			Auto-defrost mode (Reversed refrigerant circle)	
Refrigerant	Type x original charge		R410A x 10.5kg (24lb)	R410A x 11.8kg (26lb)
	Control		Indoor LEV and BC controller	
Pipe between unit and distributor	High pressure	mm(in.)	15.88(5/8)Brazed	19.05(3/4)Brazed
	Low pressure	mm(in.)	19.05(3/4)Brazed	22.2(7/8)Brazed
Drawing	External		WKB94T268	
	Wiring		WKE94C141	
Standard attachment	Document		Installation Manual	
	Accessory		Details refer to External Drw	
Optional parts			Outdoor Twinning kit: CMY-R100VBK joint: CMY-Y102S-G2, CMY-Y102L-G2, CMY-Y202-G2, CMY-R160-J1 Main BC controller: CMB-P108, 1010, 1013, 1016V-GA1 Sub BC controller: CMB-P104, 108V-GB1, CMB-P1016V-HB1	
Remarks			* Details on foundation work, duct work, insulation work, electrical wiring, power source switch, and other items shall be referred to the Installation Manual. * Systems with considerably long pipe runs, in heating mode, may be subject to slightly louder than normal noise from the outdoor unit/s. * The outdoor twinning kit(low pressure) should be connected to the low pressure side of the outdoor unit. If the connected units are of different capacities, the outdoor twinning kit(low pressure) should be installed in the unit with the largest capacity. * Due to continuing improvement, above specifications may be subject to change without notice.	

Notes :	*1 Nominal cooling conditions	*2 Nominal cooling conditions	*3 Nominal heating conditions
Indoor :	27degCDB/19degCWB (81degFDB/66degFWB)	27degCDB/19.5degCWB (81degFDB/67degFWB)	20degCDB (68degFDB)
Outdoor :	35degCDB (95degFDB)	35degCDB (95degFDB)	7degCDB/6degCWB (45degFDB/43degFWB)
Pipe length :	7.5m(24-9/16ft.)	5m(16-3/8ft.)	7.5m(24-9/16ft.)
Level difference :	0m(0ft.)	0m(0ft.)	0m(0ft.)

*4 -5degC(23degF)DB/-6degC(21degF)WB to 21degC(70degF)DB/15.5degC(60degF)WB with cooling/heating mixed operation.

* Nominal condition *1, *3 are subject to JIS B8615-1

*5 External static pressure option is available (30Pa, 60Pa/3.1mmH_2O, 6.1mmH_2O)

Unit converter	
kcal	=kW x 860
Btu/h	=kW x 3,412
cfm	=m^3/min x 35.31
lb	=kg / 0.4536

*Above specification data is subject to rounding variation.

R2(HIGH COP)

1. SPECIFICATIONS

Model			PURY-EP550YSHM-A1(-BS)
Power source			3-phase 4-wire 380-400-415V 50/60Hz
Cooling capacity (Nominal)	*1	kW	63.0
	*1	kcal / h	54,200
	*1	Btu / h	215,000
	*2	kcal / h	55,000
	Power input	kW	15.47
	Current input	A	26.1-24.8-23.9
	COP	kW / kW	4.07
Temp. range of cooling *4	Indoor	W.B.	15 to 24degC(59 to 75degF)
	Outdoor	D.B.	-5 to 43degC(23 to 109degF)
Heating capacity (Nominal)	*3	kW	69.0
	*3	kcal / h	59,300
	*3	Btu / h	235,400
	Power input	kW	16.95
	Current input	A	28.6-27.1-26.2
	COP	kW / kW	4.07
Temp. range of heating *4	Indoor temp.	D.B.	15 to 27degC(59 to 81degF)
	Outdoor temp.	W.B.	-20 to 15.5degC(-4 to 60degF)
Indoor unit connectable	Total capacity		50 to 150 % of outdoor unit capacity
	Model / Quantity		P15 to P250 / 2 to 50 (Connectable branch pipe number is max. 48.)
Sound pressure level (measured in anechoic room)		dB <A>	63
Diameter of refrigerant pipe	High pressure	mm(in.)	28.58(1-1/8) Brazed
	Low pressure	mm(in.)	28.58(1-1/8) Brazed

Set Model

Model			PURY-EP250YHM-A(-BS)	PURY-EP300YHM-A(-BS)
External finish			Pre-coated galvanized steel sheet (+powder coating for -BS type)<MUNSELL 5Y 8/1>	
External dimension HxWxD		mm	1,710(1,650 without legs) x 1,220 x 760	1,710(1,650 without legs) x 1,220 x 760
		in.	67-3/8(65 without legs) x 48-1/16 x 29-15/16	67-3/8(65 without legs) x 48-1/16 x 29-15/16
Net weight		kg(lb)	265(584)	265(584)
Heat exchanger			Salt-resistant cross fin & copper tube	Salt-resistant cross fin & copper tube
Compressor	Type		Inverter scroll hermetic compressor	
	Manufacture		AC&R Works, MITSUBISHI ELECTRIC CORPORATION	
	Starting method		Inverter	Inverter
	Motor output	kW	6.7	8.0
	Case heater	kW	0.045(240 V)	0.045(240 V)
	Lubricant		MEL32	MEL32
FAN	Air flow rate	m^3 / min	225	225
		L/s	3,750	3,750
		cfm	7,945	7,945
	External static press.	*5	0 Pa (0 mmH_2O)	0 Pa (0 mmH_2O)
	Type x Quantity		Propeller fan x 1	Propeller fan x 1
	Control, Driving mechanism		Inverter-control, Direct-driven by motor	Inverter-control, Direct-driven by motor
	Motor output	kW	0.92	0.92
HIC circuit (HIC: Heat Inter-Changer)			-	
Protection	High pressure protection		High pressure sensor, High pressure switch at 4.15MPa (601 psi)	
	Inverter circuit (COMP. / FAN)		Over-heat protection, Over-current protection	
	Compressor		Over-heat protection	
	Fan motor		Thermal switch	
Defrosting method			Auto-defrost mode (Reversed refrigerant circle)	
Refrigerant	Type x original charge		R410A x 11.8kg (26lb)	R410A x 11.8kg (26lb)
	Control		Indoor LEV and BC controller	
Pipe between unit and distributor	High pressure	mm(in.)	19.05(3/4)Brazed	19.05(3/4)Brazed
	Low pressure	mm(in.)	22.2(7/8)Brazed	22.2(7/8)Brazed
Drawing	External		WKB94T269	
	Wiring		WKE94C320	WKE94C141
Standard attachment	Document		Installation Manual	
	Accessory		Details refer to External Drw	
Optional parts			Outdoor Twinning kit: CMY-R100VBK joint: CMY-Y102S-G2, CMY-Y102L-G2, CMY-Y202-G2, CMY-R160-J1 Main BC controller: CMB-P108, 1010, 1013, 1016V-GA1 Sub BC controller: CMB-P104, 108V-GB1, CMB-P1016V-HB1	
Remarks			* Details on foundation work, duct work, insulation work, electrical wiring, power source switch, and other items shall be referred to the Installation Manual. * Systems with considerably long pipe runs, in heating mode, may be subject to slightly louder than normal noise from the outdoor unit/s. * The outdoor twinning kit(low pressure) should be connected to the low pressure side of the outdoor unit. If the connected units are of different capacities, the outdoor twinning kit(low pressure) should be installed in the unit with the largest capacity. * Due to continuing improvement, above specifications may be subject to change without notice.	

Notes :	*1 Nominal cooling conditions	*2 Nominal cooling conditions	*3 Nominal heating conditions
Indoor :	27degCDB/19degCWB (81degFDB/66degFWB)	27degCDB/19.5degCWB (81degFDB/67degFWB)	20degCDB (68degFDB)
Outdoor :	35degCDB (95degFDB)	35degCDB (95degFDB)	7degCDB/6degCWB (45degFDB/43degFWB)
Pipe length :	7.5m(24-9/16ft.)	5m(16-3/8ft.)	7.5m(24-9/16ft.)
Level difference :	0m(0ft.)	0m(0ft.)	0m(0ft.)

*4 -5degC(23degF)DB/-6degC(21degF)WB to 21degC(70degF)DB/15.5degC(60degF)WB with cooling/heating mixed operation.

* Nominal condition *1, *3 are subject to JIS B8615-1

*5 External static pressure option is available (30Pa, 60Pa/3.1mmH_2O, 6.1mmH_2O)

Unit converter	
kcal	=kW x 860
Btu/h	=kW x 3,412
cfm	=m^3/min x 35.31
lb	=kg / 0.4536

*Above specification data is subject to rounding variation.

R2(HIGH

1. SPECIFICATIONS

Model			PURY-EP600YSHM-A(-BS)
Power source			3-phase 4-wire 380-400-415V 50/60Hz
Cooling capacity (Nominal)	*1	kW	69.0
	*1	kcal / h	59,300
	*1	Btu / h	235,400
	*2	kcal / h	60,000
	Power input	kW	17.00
	Current input	A	28.6-27.2-26.2
	COP	kW / kW	4.05
Temp. range of cooling *4	Indoor	W.B.	15 to 24degC(59 to 75degF)
	Outdoor	D.B.	-5 to 43degC(23 to 109degF)
Heating capacity (Nominal)	*3	kW	76.5
	*3	kcal / h	65,800
	*3	Btu / h	261,000
	Power input	kW	19.12
	Current input	A	32.2-30.6-29.5
	COP	kW / kW	4.00
Temp. range of heating *4	Indoor temp.	D.B.	15 to 27degC(59 to 81degF)
	Outdoor temp.	W.B.	-20 to 15.5degC(-4 to 60degF)
Indoor unit connectable	Total capacity		50 to 150 % of outdoor unit capacity
	Model / Quantity		P15 to P250 / 2 to 50 (Connectable branch pipe number is max. 48.)
Sound pressure level (measured in anechoic room)		dB <A>	63
Diameter of refrigerant pipe	High pressure	mm(in.)	28.58(1-1/8) Brazed
	Low pressure	mm(in.)	28.58(1-1/8) Brazed

Set Model

Model			PURY-EP300YHM-A(-BS)	PURY-EP300YHM-A(-BS)
External finish			Pre-coated galvanized steel sheet (+powder coating for -BS type)<MUNSELL 5Y 8/1>	
External dimension HxWxD		mm	1,710(1,650 without legs) x 1,220 x 760	1,710(1,650 without legs) x 1,220 x 760
		in.	67-3/8(65 without legs) x 48-1/16 x 29-15/16	67-3/8(65 without legs) x 48-1/16 x 29-15/16
Net weight		kg(lb)	265(584)	265(584)
Heat exchanger			Salt-resistant cross fin & copper tube	Salt-resistant cross fin & copper tube
Compressor	Type		Inverter scroll hermetic compressor	
	Manufacture		AC&R Works, MITSUBISHI ELECTRIC CORPORATION	
	Starting method		Inverter	Inverter
	Motor output	kW	8.0	8.0
	Case heater	kW	0.045(240 V)	0.045(240 V)
	Lubricant		MEL32	MEL32
FAN	Air flow rate	m^3 / min	225	225
		L/s	3,750	3,750
		cfm	7,945	7,945
	External static press.	*5	0 Pa (0 mmH_2O)	0 Pa (0 mmH_2O)
	Type x Quantity		Propeller fan x 1	Propeller fan x 1
	Control, Driving mechanism		Inverter-control, Direct-driven by motor	Inverter-control, Direct-driven by motor
	Motor output	kW	0.92	0.92
HIC circuit (HIC: Heat Inter-Changer)			-	
Protection	High pressure protection		High pressure sensor, High pressure switch at 4.15MPa (601 psi)	
	Inverter circuit (COMP. / FAN)		Over-heat protection, Over-current protection	
	Compressor		Over-heat protection	
	Fan motor		Thermal switch	
Defrosting method			Auto-defrost mode (Reversed refrigerant circle)	
Refrigerant	Type x original charge		R410A x 11.8kg (26lb)	R410A x 11.8kg (26lb)
	Control		Indoor LEV and BC controller	
Pipe between unit and distributor	High pressure	mm(in.)	19.05(3/4)Brazed	19.05(3/4)Brazed
	Low pressure	mm(in.)	22.2(7/8)Brazed	22.2(7/8)Brazed
Drawing	External		WKB94T269	
	Wiring		WKE94C141	
Standard attachment	Document		Installation Manual	
	Accessory		Details refer to External Drw	
Optional parts			Outdoor Twinning kit: CMY-R100VBK joint: CMY-Y102S-G2, CMY-Y102L-G2, CMY-Y202-G2, CMY-R160-J1 Main BC controller: CMB-P108, 1010, 1013, 1016V-GA1 Sub BC controller: CMB-P104, 108V-GB1, CMB-P1016V-HB1	
Remarks			* Details on foundation work, duct work, insulation work, electrical wiring, power source switch, and other items shall be referred to the Installation Manual. * Systems with considerably long pipe runs, in heating mode, may be subject to slightly louder than normal noise from the outdoor unit/s. * The outdoor twinning kit(low pressure) should be connected to the low pressure side of the outdoor unit. If the connected units are of different capacities, the outdoor twinning kit(low pressure) should be installed in the unit with the largest capacity. * Due to continuing improvement, above specifications may be subject to change without notice.	

Notes :	*1 Nominal cooling conditions	*2 Nominal cooling conditions	*3 Nominal heating conditions
Indoor :	27degCDB/19degCWB (81degFDB/66degFWB)	27degCDB/19.5degCWB (81degFDB/67degFWB)	20degCDB (68degFDB)
Outdoor :	35degCDB (95degFDB)	35degCDB (95degFDB)	7degCDB/6degCWB (45degFDB/43degFWB)
Pipe length :	7.5m(24-9/16ft.)	5m(16-3/8ft.)	7.5m(24-9/16ft.)
Level difference :	0m(0ft.)	0m(0ft.)	0m(0ft.)

*4 -5degC(23degF)DB/-6degC(21degF)WB to 21degC(70degF)DB/15.5degC(60degF)WB with cooling/heating mixed operation.

* Nominal condition *1, *3 are subject to JIS B8615-1

*5 External static pressure option is available (30Pa, 60Pa/3.1mmH_2O, 6.1mmH_2O)

Unit converter	
kcal	=kW x 860
Btu/h	=kW x 3,412
cfm	=m^3/min x 35.31
lb	=kg / 0.4536

*Above specification data is subject to rounding variation.

R2(HIGH COP)

PURY-EP200YHM-A(-BS)

Ref. : PURY_YHM-A_EXD_EUDB_EP200_R1
Unit : mm

Note 1. Please refer to the next page for information regarding necessary spacing around the unit and foundation work.
2. The detachable leg can be removed at site.
3. At brazing of pipes,wrap the refrigerant service valve with wet cloth and keep the temperature of refrigerant service valve under 120°C.

NO.	Usage		Specifications
①	For pipes	Front through hole	140X77 Knockout hole
②		Front through hole (Uses when twinning kit (optional parts) is mounted.)	Ø 45 Knockout hole
③		Bottom through hole	150X92 Knockout hole
④	For wires	Front through hole	Ø65 or Ø40 Knockout hole
⑤		Front through hole	Ø52 or Ø27 Knockout hole
⑥		Bottom through hole	Ø 52 Knockout hole
⑦	For transmission cables	Front through hole	Ø 34 Knockout hole

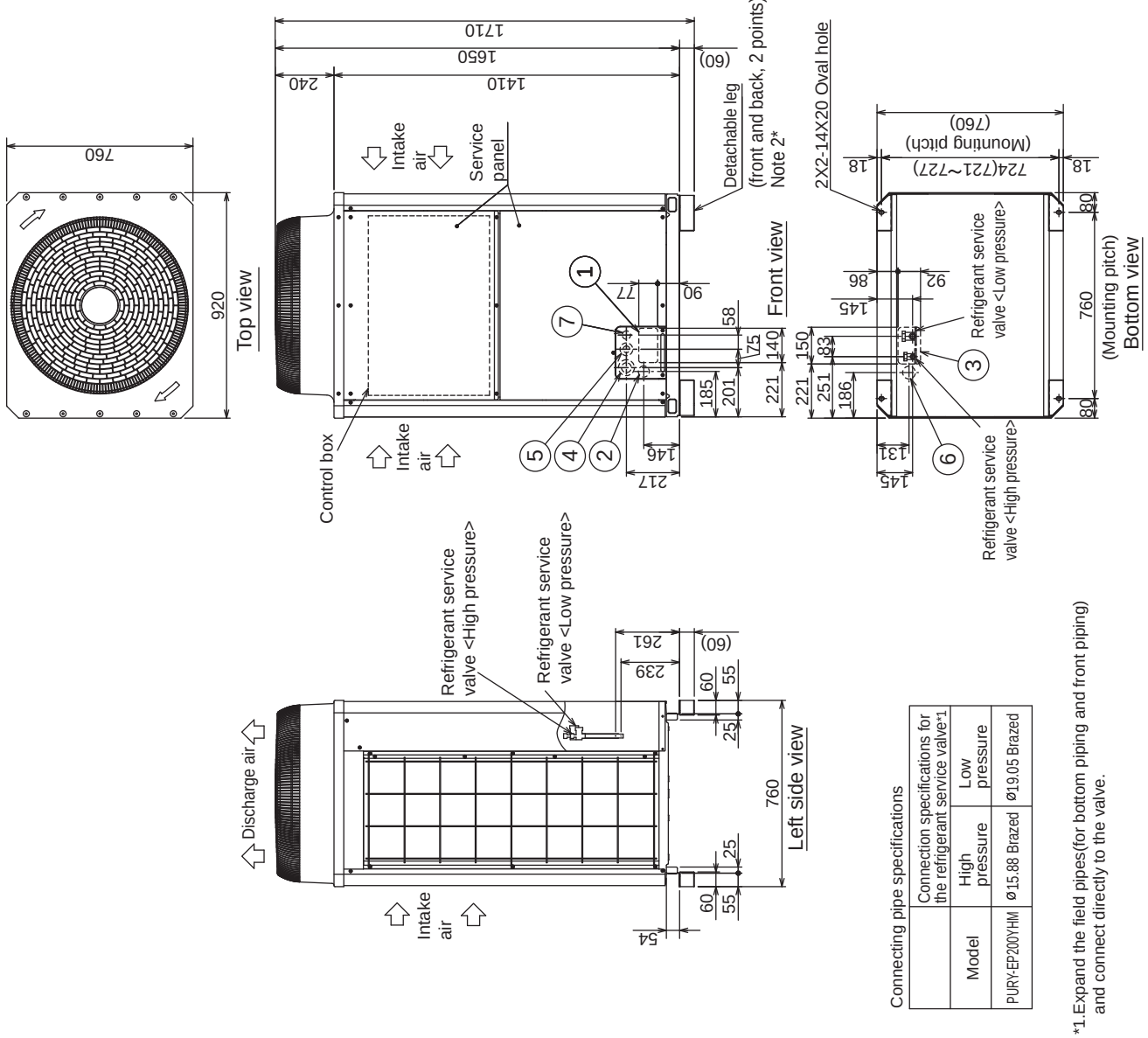

Connecting pipe specifications

Model	Connection specifications for the refrigerant service valve*1	
	High pressure	Low pressure
PURY-EP200YHM	Ø15.88 Brazed	Ø19.05 Brazed

*1.Expand the field pipes(for bottom piping and front piping) and connect directly to the valve.

R2(HIGH)

R2(HIGH COP)

PURY-EP200YHM-A(-BS)

Ref. : PURY_YHM-A_EXD_EUDB_EP200_R2

Unit : mm

1.Required space around the unit

● In case of single installation

① Secure enough space around the unit as shown in the figure below.

- With a space of at least 300mm to the wall on the back of the unit
- With a space of at least 100mm to the wall on the back of the unit

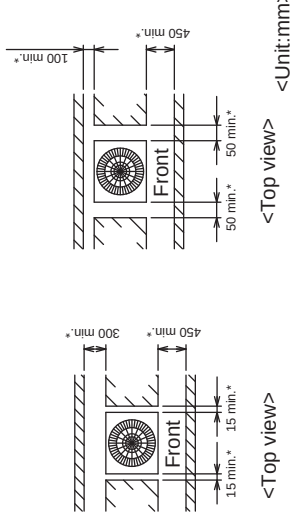

<Unit:mm>

② When the height of the walls on the front,back or on the sides<H> exceeds the wall height limit as defined below add the height that exceeds the height limit <h> to the figures that are marked with an asterisk.

<Wall height limit> Front :Up to the unit height
Back :Up to 500mm from the unit bottom
Side :Up to the unit height

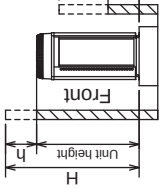

● In case of collective installation

① When multiple units are installed adjacent to each other, secure enough space to allow for air circulation and walkway between groups of units as shown in the figures below.
② At least two sides must be left open.
③ As with the single installation, add the height that exceeds the height limit<h> to the figures that are marked with an asterisk.

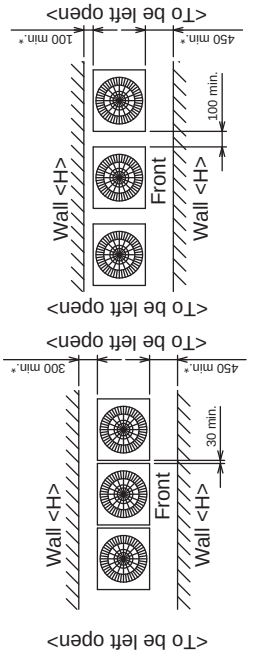

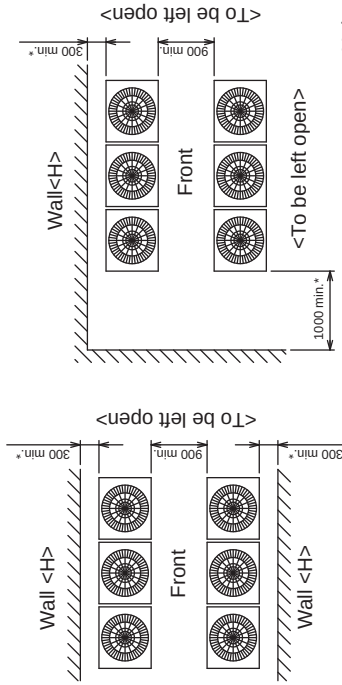

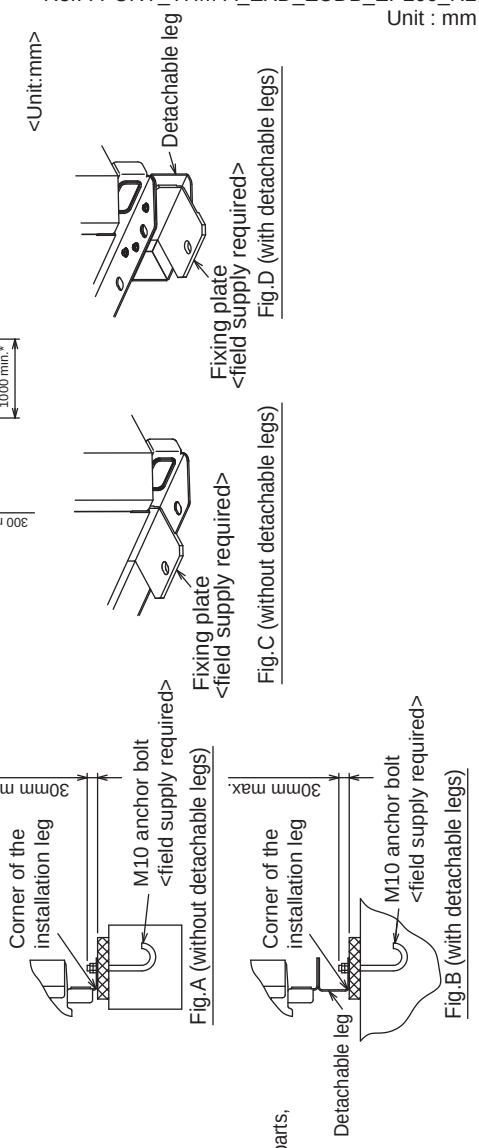

2.Foundation work

① Take into consideration the surface strength,water drainage route, piping route,and wiring route when preparing the installation site. <Note that the drain water comes out of the unit during operation.>
② Build the foundation in such way that the corner of the installation leg is securely supported as shown in the right figure.(Fig.A,B) When using cushion pads, be sure that the full width of the unit is covered.
③ The protrusion length of the anchor bolt must not exceed 30mm.(Fig.A,B)
④ Use four fixing plates as shown in the right figure <field supply required> when using post-installed anchor bolts.(Fig.C,D)
⑤ To prevent small animals and water from entering the unit and damaging its parts, close the gap around the edges of through holes for pipes and wires with filler plates <field supply required>.
⑥ When the pipes or cables are routed at the bottom of the unit, make sure that the through hole at the base of the unit does not get blocked with the installation base.
⑦ Refer to the Installation Manual when installing units on an installation base.

PURY-EP250, 300YHM-A(-BS)

Ref. : PURY-YHM-A_EXD_EUDB_EP250-EP300_R1

Unit : mm

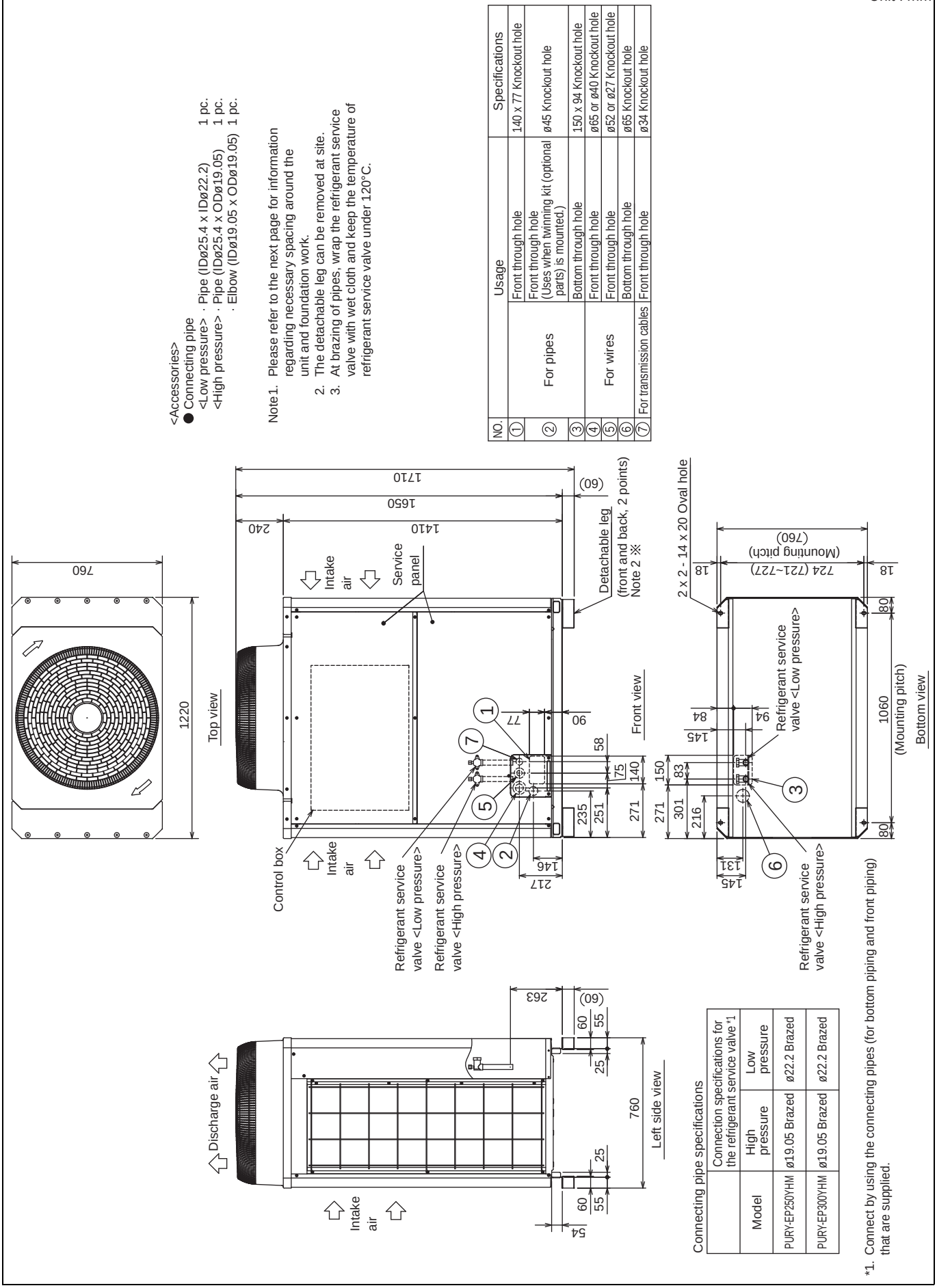

<Accessories>

● Connecting pipe

<Low pressure> · Pipe (ID ø25.4 x ID ø22.2) 1 pc.

<High pressure> · Pipe (ID ø25.4 x OD ø19.05) 1 pc.

· Elbow (ID ø19.05 x OD ø19.05) 1 pc.

Note 1. Please refer to the next page for information regarding necessary spacing around the unit and foundation work.

2. The detachable leg can be removed at site.

3. At brazing of pipes, wrap the refrigerant service valve with wet cloth and keep the temperature of refrigerant service valve under 120°C.

NO.	Usage		Specifications
①	For pipes	Front through hole	140 x 77 Knockout hole
②		Front through hole (Uses when twinning kit (optional parts) is mounted.)	ø45 Knockout hole
③		Bottom through hole	150 x 94 Knockout hole
④	For wires	Front through hole	ø65 or ø40 Knockout hole
⑤		Front through hole	ø52 or ø27 Knockout hole
⑥		Bottom through hole	ø65 Knockout hole
⑦	For transmission cables	Front through hole	ø34 Knockout hole

Connecting pipe specifications

Model	Connection specifications for the refrigerant service valve *1	
	High pressure	Low pressure
PURY-EP250YHM	ø19.05 Brazed	ø22.2 Brazed
PURY-EP300YHM	ø19.05 Brazed	ø22.2 Brazed

*1. Connect by using the connecting pipes (for bottom piping and front piping) that are supplied.

R2(HIGH)

R2(HIGH COP)

PURY-EP250, 300YHM-A(-BS)

Ref. : PURY-YHM-A_EXD_EUDB_EP250-EP300_R2
Unit : mm

1. Required space around the unit

● In case of single installation

① Secure enough space around the unit as shown in the figure below.

· With a space of at least 300mm to the wall on the back of the unit

· With a space of at least 100mm to the wall on the back of the unit

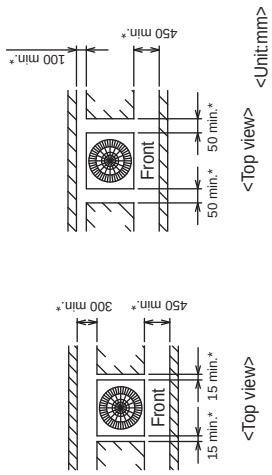

② When the height of the walls on the front, back or on the sides <H> exceeds the wall height limit as defined below add the height that exceeds the height limit <h> to the figures that are marked with an asterisk.

<Wall height limit> Front : Up to the unit height
Back : Up to 500mm from the unit bottom
Side : Up to the unit height

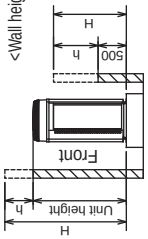

● In case of collective installation

① When multiple units are installed adjacent to each other, secure enough space to allow for air circulation and walkway between groups of units as shown in the figures below.

② At least two sides must be left open.

③ As with the single installation, add the height that exceeds the height limit <h> to the figures that are marked with an asterisk.

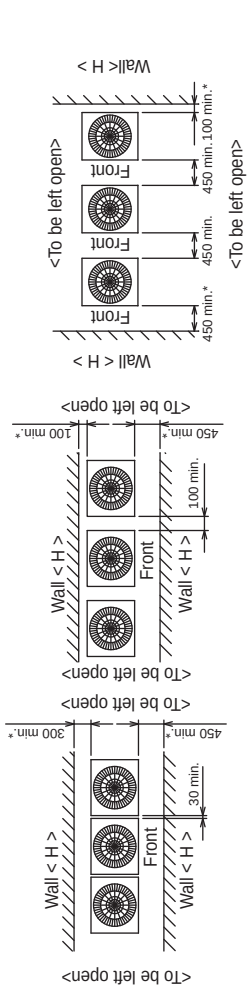

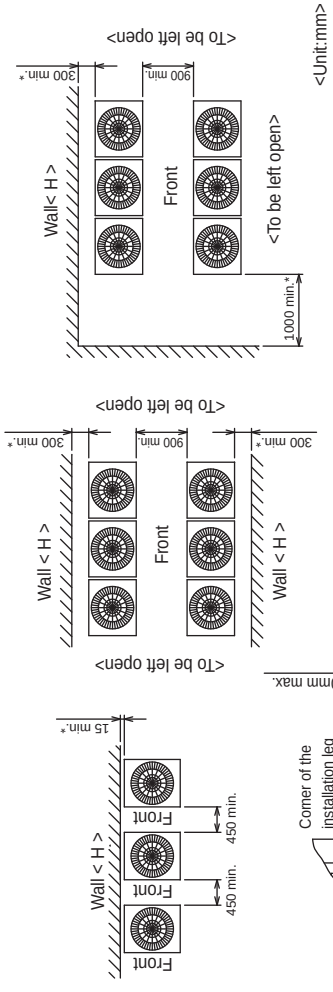

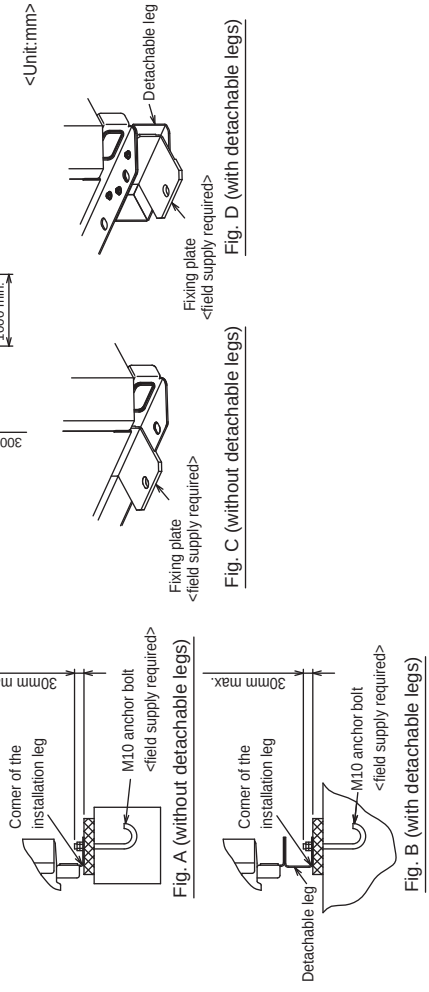

2. Foundation work

① Take into consideration the surface strength, water drainage route, piping route, and wiring route when preparing the installation site. <Note that the drain water comes out of the unit during operation.>

② Build the foundation in such way that the corner of the installation leg is securely supported as shown in the right figure. (Fig. A, B)

③ The protrusion length of the anchor bolt must not exceed 30mm. (Fig. A, B)

④ Use four fixing plates as shown in the right figure <field supply required> when using post-installed anchor bolts. (Fig. C, D)

⑤ To prevent small animals and water and snow from entering the unit and damaging its parts, close the gap around the edges of through holes for pipes and wires with filler plates <field supply required>.

⑥ When the pipes or cables are routed at the bottom of the unit, make sure that the through hole at the base of the unit does not get blocked with the installation base.

⑦ Refer to the Installation Manual when installing units on an installation base.

PURY-EP400YSHM-A(-BS)

Ref. : PURY_YHM-A_EXD_EUDB_EP400
Unit : mm

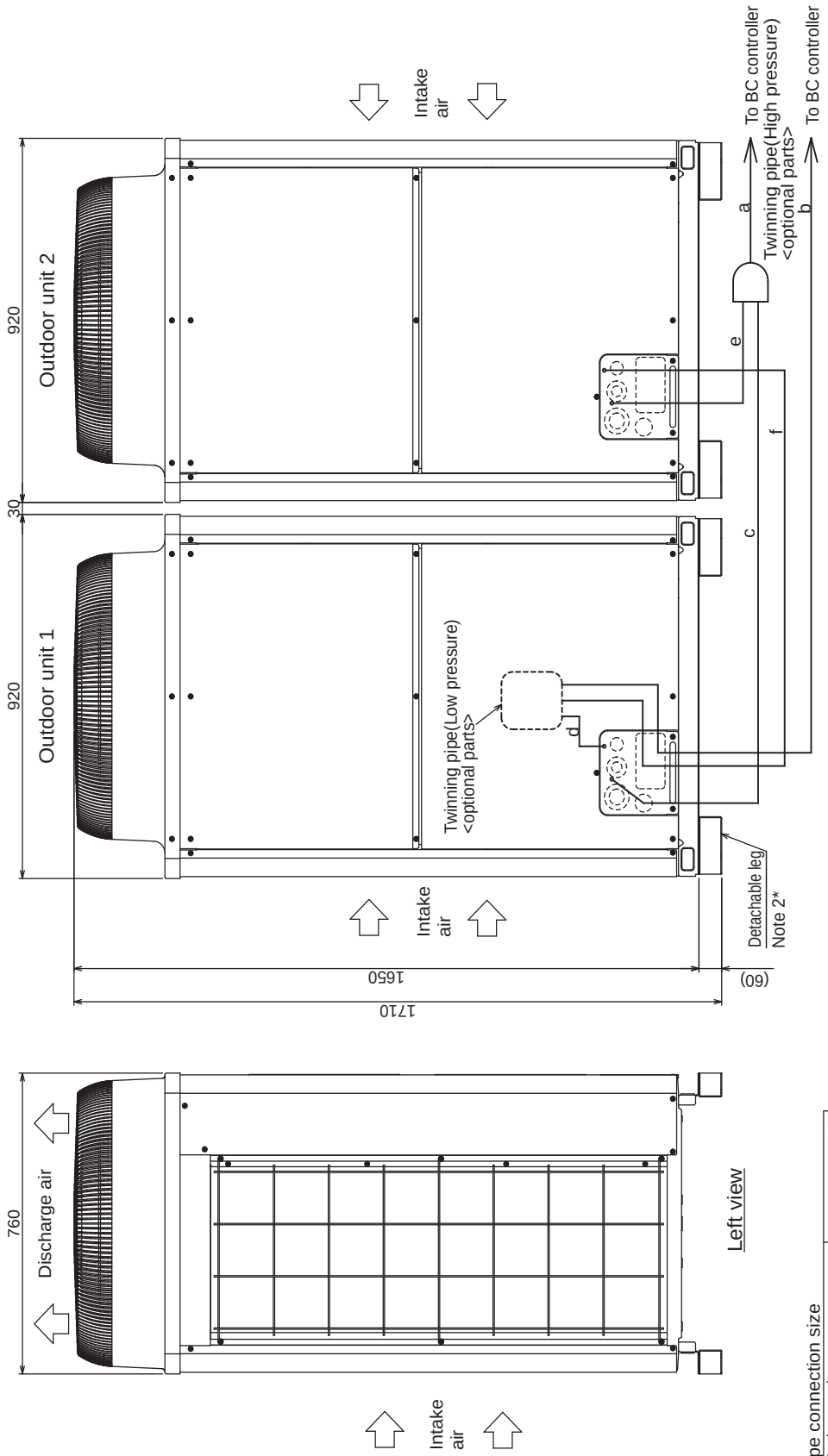

Twinning pipe connection size

Package unit name		PURY-EP400YSHM-A(-BS)	
Component unit name	Outdoor unit 1	PURY-EP200YHM-A(-BS)	
	Outdoor unit 2	PURY-EP200YHM-A(-BS)	
Outdoor Twinning Kit(optional parts)		CMY-R100VBK	
BC controller ~Twinning pipe	High pressure	a	ø22.2
	Low pressure	b	ø28.58

	Unit model	High pressure	Low pressure
Twinning pipe ~Outdoor unit	EP200	c or e	d or f
		ø15.88	ø19.05

Note 1. Connect the pipes as shown in the figure above. Refer to the table above for the pipe size.
2. The detachable leg can be removed at site.
3. Twinning pipe (High pressure) should not be tilted more than 15 degrees from the horizontal plane. Be sure to see the Installation Manual for the details of Twinning pipe installation.
4. The pipe section before the Twinning pipe (sections "a" in the figure) must have at least 500mm of straight section (*including the straight pipe that is supplied with the Twinning pipe).
5. Only use the Twinning pipe by Mitsubishi (optional parts).

R2(HIGH

R2(HIGH COP)

PURY-EP450, 500YSHM-A(1)(-BS)

Ref. : PURY-YSHM-A_EXD_EUDB_EP450-EP500
Unit : mm

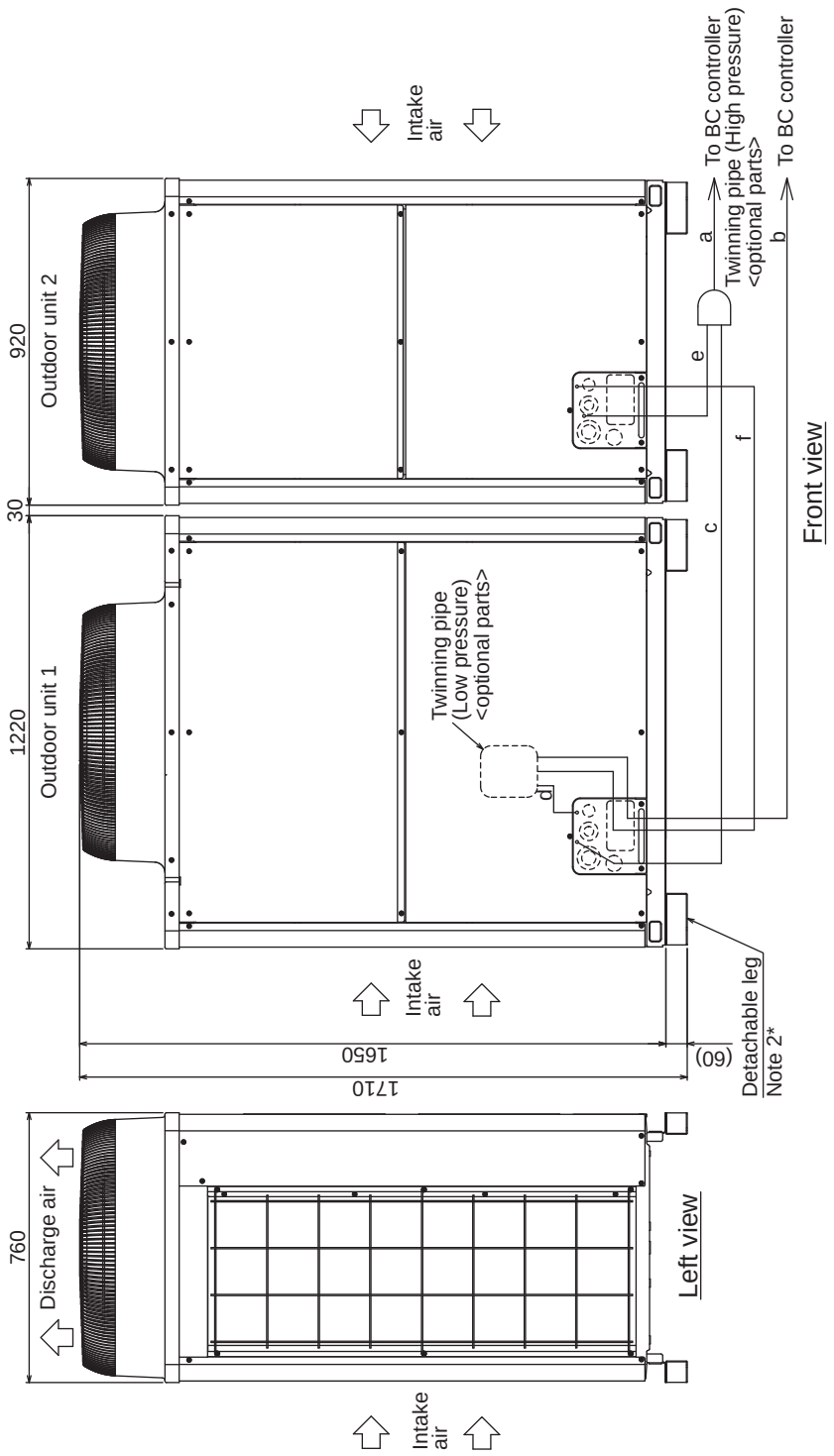

Twinning pipe connection size

Package unit name			PURY-EP450YSHM-A1(-BS)	PURY-EP500YSHM-A(-BS)
Component unit name	Outdoor unit 1		PURY-EP250YHM-A(-BS)	PURY-EP300YHM-A(-BS)
	Outdoor unit 2		PURY-EP200YHM-A(-BS)	PURY-EP200YHM-A(-BS)
Outdoor Twinning Kit (optional parts)			CMY-R100VBK	
BC controller ~ Twinning pipe	Low pressure	a	ø22.2	
	High pressure	b	ø28.58	

	Unit model	High pressure c or e	Low pressure d or f
Twinning pipe ~ Outdoor unit	EP200	ø15.88	ø19.05
	EP250	ø19.05	ø22.2
	EP300	ø19.05	ø22.2

Note 1. Connect the pipes as shown in the figure above. Refer to the table above for the pipe size.
2. The detachable leg can be removed at site.
3. Twinning pipe (High pressure) should not be tilted more than 15 degrees from the horizontal plane. Be sure to see the Installation Manual for the details of Twinning pipe installation.
4. The pipe section before the Twinning pipe (sections "a" in the figure) must have at least 500mm of straight section (* including the straight pipe that is supplied with the Twinning pipe).
5. Only use the Twinning pipe by Mitsubishi (optional parts).

PURY-EP550, 600YSHM-A(1)(-BS)

Ref. : PURY-YSHM-A_EXD_EUDB_EP550-EP600
Unit : mm

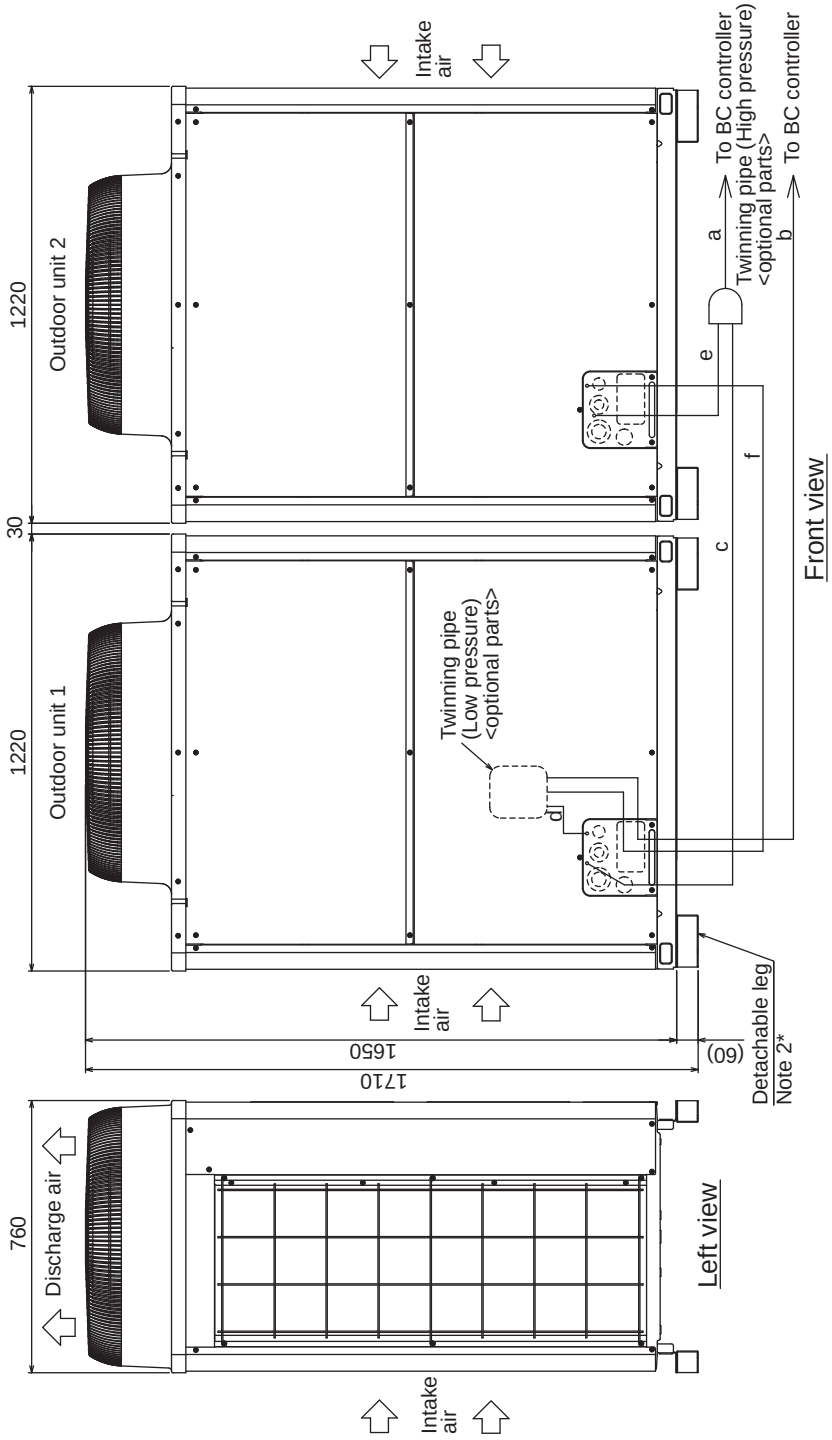

Twinning pipe connection size

Package unit name		PURY-EP550YSHM-A1(-BS)	PURY-EP600YSHM-A(-BS)
Component unit name	Outdoor unit 1	PURY-EP300YHM-A(-BS)	PURY-EP300YHM-A(-BS)
	Outdoor unit 2	PURY-EP250YHM-A(-BS)	PURY-EP300YHM-A(-BS)
Outdoor Twinning Kit (optional parts)		CMY-R100VBK	
BC controller ~ Twinning pipe	High pressure a	ø28.58	
	Low pressure b	ø28.58	

	Unit model	High pressure c or e	Low pressure d or f
Twinning pipe ~ Outdoor unit	EP250	ø19.05	ø22.2
	EP300	ø19.05	ø22.2

Note 1. Connect the pipes as shown in the figure above. Refer to the table above for the pipe size.
2. The detachable leg can be removed at site.
3. Twinning pipe (High pressure) should not be tilted more than 15 degrees from the horizontal plane. Be sure to see the Installation Manual for the details of Twinning pipe installation.
4. The pipe section before the Twinning pipe (sections "a" in the figure) must have at least 500mm of straight section (* including the straight pipe that is supplied with the Twinning pipe).
5. Only use the Twinning pipe by Mitsubishi (optional parts).

R2(HIGH

3. CENTER OF GRAVITY

PURY-P200, P250, P300, EP200YHM-A (-BS)

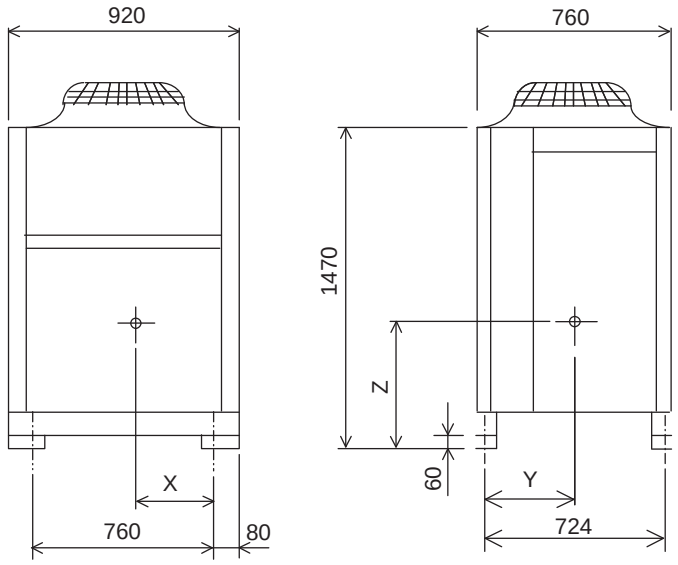

Model	X	Y	Z
PURY-P200YHM-A (-BS)	345	317	655
PURY-P250YHM-A (-BS)	345	332	655
PURY-P300YHM-A (-BS)	335	327	645
PURY-EP200YHM-A (-BS)	345	332	655

PURY-P350, P400, EP250, EP300YHM-A (-BS)

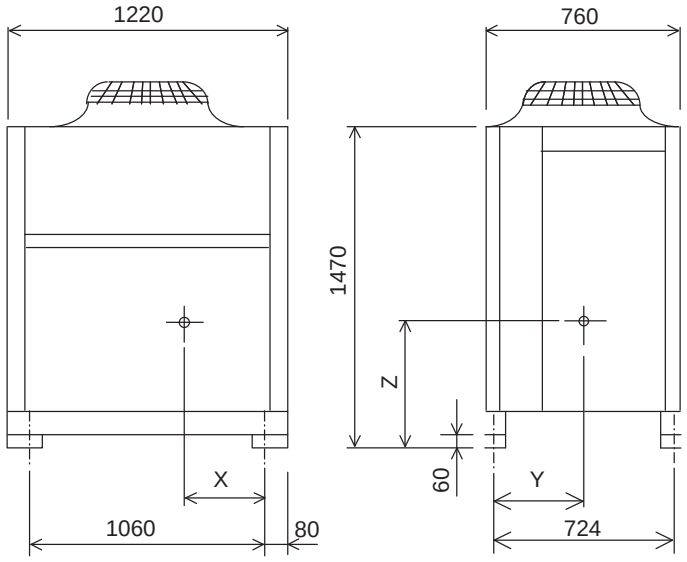

Model	X	Y	Z
PURY-P350YHM-A (-BS)	450	322	630
PURY-P400YHM-A (-BS)	450	322	630
PURY-EP250YHM-A (-BS)	450	322	630
PURY-EP300YHM-A (-BS)	450	322	630

Ref. : PURY_YHM-A_COG_EUDB_ALL_2

PURY-P200,250,300,350,400YHM-A(-BS)
PURY-EP200,250,300YHM-A(-BS)

Ref. :PURY_YHM-A_EWD_EUDB_ALL

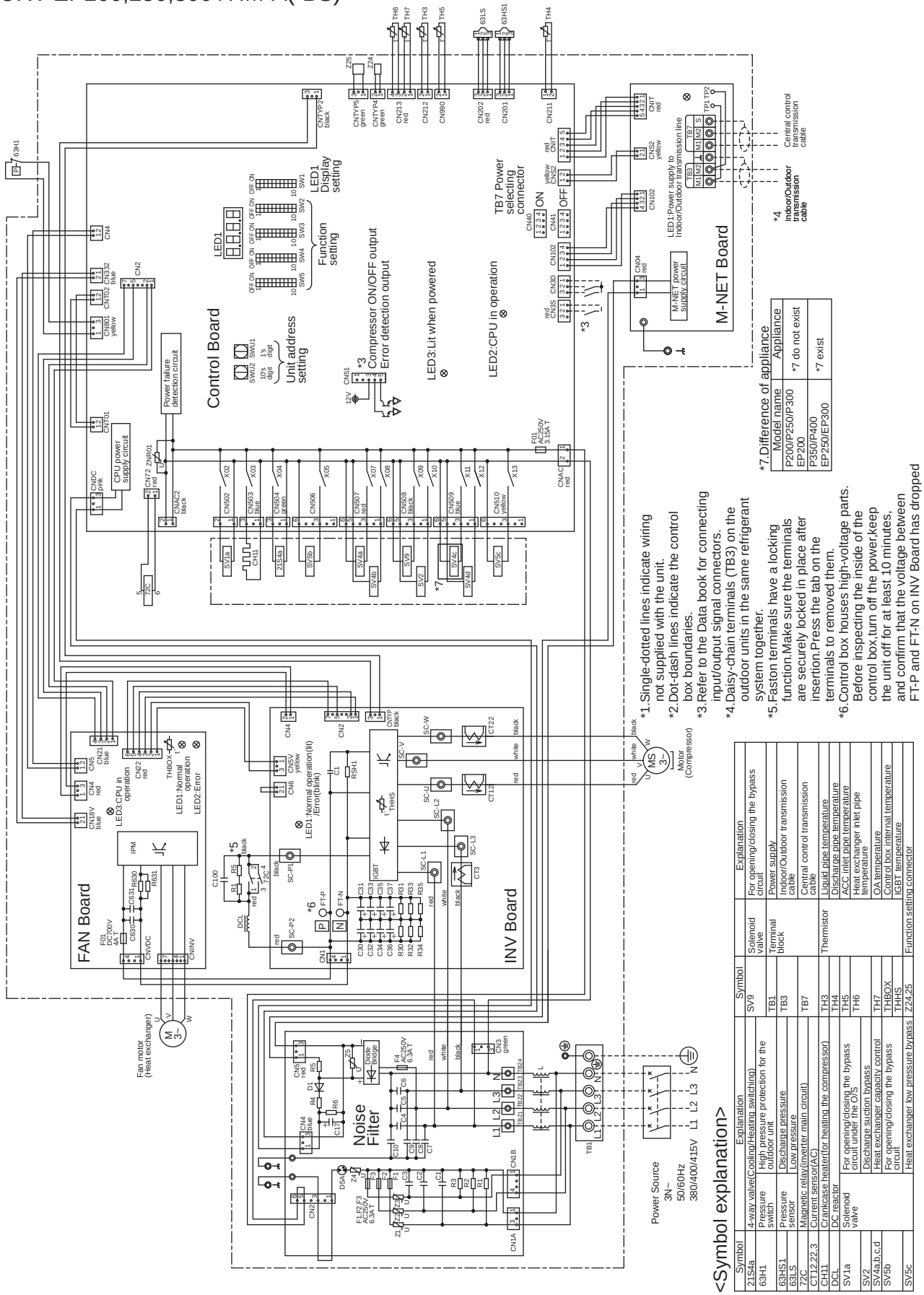

*1.Single-dotted lines indicate wiring not supplied with the unit.
*2.Dot-dash lines indicate the control box boundaries.
*3.Refer to the Data book for connecting input/output signal connectors.
*4.Daisy-chain terminals (TB3) on the outdoor units in the same refrigerant system together.
*5.Faston terminals have a locking function.Make sure the terminals are securely locked in place after insertion.Press the tab on the terminals to removed them.
*6.Control box houses high-voltage parts. Before inspecting the inside of the control box,turn off the power,keep the unit off for at least 10 minutes, and confirm that the voltage between FT-P and FT-N on INV Board has dropped to DC20V or less.

*7.Difference of appliance

Model name	Appliance	
P200/P250/P300 EP200	*7 do not exist	
P350/P400 EP250/EP300	*7 exist	

<Symbol explanation>

Symbol	Explanation
21S4a	4-way valve(Cooling/Heating switching)
63H1	Pressure switch High pressure protection for the outdoor unit
63HS1	Pressure sensor Discharge pressure
63LS	Low pressure
72C	Magnetic relay(Inverter main circuit)
CT12,22,3	Current sensor(AC)
CH11	Crankcase heater(for heating the compressor)
DCL	DC reactor
SV1a	Solenoid valve For opening/closing the bypass circuit under the O/S
SV2	Discharge suction bypass
SV4a,b,c,d	Heat exchanger capacity control
SV5b	For opening/closing the bypass circuit
SV5c	Heat exchanger low pressure bypass

Symbol	Explanation
SV9	Solenoid valve For opening/closing the bypass circuit
TB1	Terminal block Power supply
TB3	Indoor/Outdoor transmission cable
TB7	Central control transmission cable
TH3	Thermistor Liquid pipe temperature
TH4	Discharge pipe temperature
TH5	ACC inlet pipe temperature
TH6	Heat exchanger inlet pipe temperature
TH7	OA temperature
THBOX	Control box internal temperature
THHS	IGBT temperature
Z24,25	Function setting connector

R2(HIGH

R2(HIGH COP)

Measurement condition
PURY-EP200YHM-A(-BS)

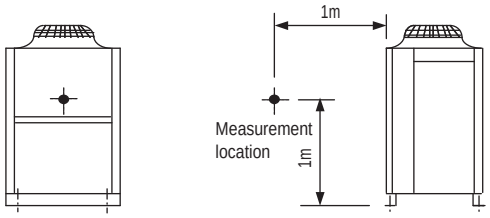

Measurement condition
PURY-EP250,300YHM-A(-BS)

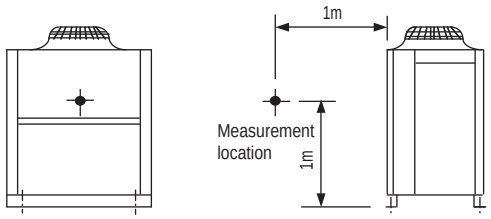

Sound level of PURY-EP200YHM-A(-BS)

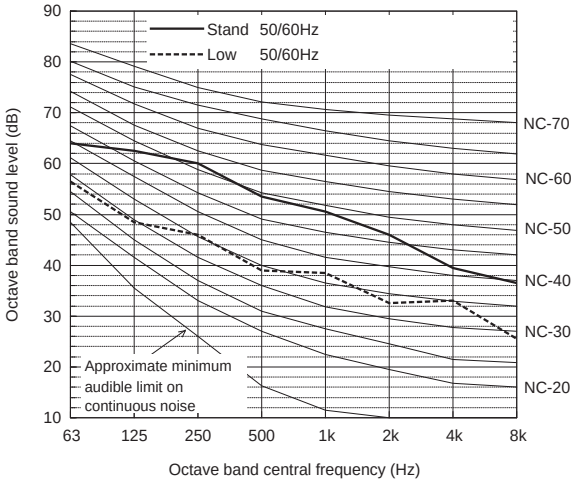

		63	125	250	500	1k	2k	4k	8k	dB(A)
Standard	50/60Hz	64.0	62.5	60.0	53.5	50.5	46.0	39.5	36.5	57.0
Low Noise Mode	50/60Hz	56.5	48.5	46.0	39.0	38.5	32.5	33.0	25.5	44.0

When Low Noise Mode is set,the A/C system's capacity is limited. The system could return to normal operation from Low Noise Mode automatically in the case that the operation condition is severe.

Sound level of PURY-EP250YHM-A(-BS)

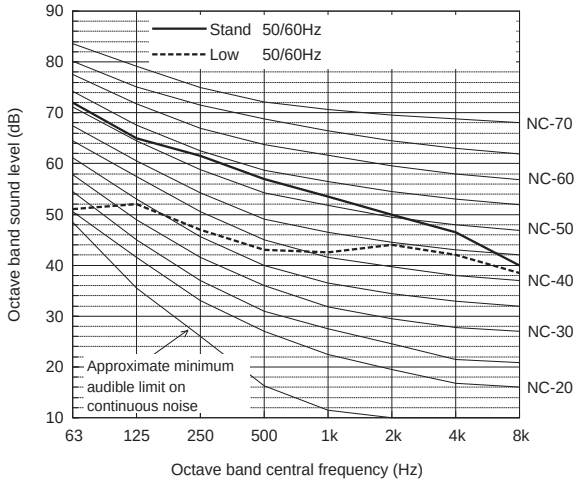

		63	125	250	500	1k	2k	4k	8k	dB(A)
Standard	50/60Hz	72.0	65.0	61.5	57.0	53.5	50.0	46.5	40.0	60.0
Low Noise Mode	50/60Hz	51.0	52.0	47.0	43.0	42.5	44.0	42.0	38.5	50.0

When Low Noise Mode is set,the A/C system's capacity is limited. The system could return to normal operation from Low Noise Mode automatically in the case that the operation condition is severe.

Sound level of PURY-EP300YHM-A(-BS)

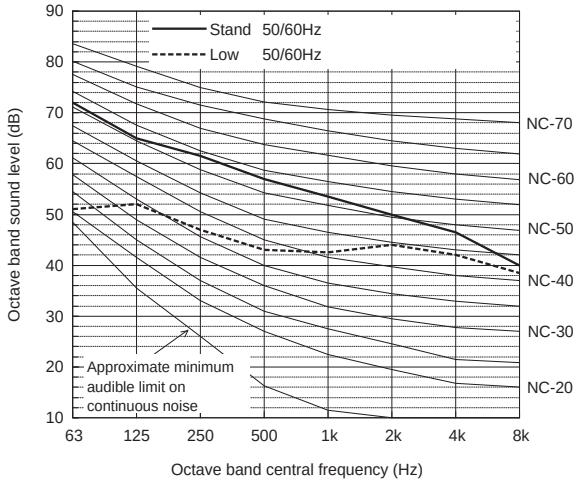

		63	125	250	500	1k	2k	4k	8k	dB(A)
Standard	50/60Hz	72.0	65.0	61.5	57.0	53.5	50.0	46.5	40.0	60.0
Low Noise Mode	50/60Hz	51.0	52.0	47.0	43.0	42.5	44.0	42.0	38.5	50.0

When Low Noise Mode is set,the A/C system's capacity is limited. The system could return to normal operation from Low Noise Mode automatically in the case that the operation condition is severe.

Measurement condition
PURY-EP400YSHM-A(-BS)

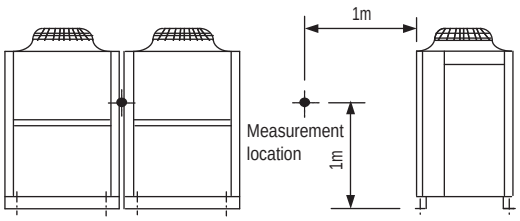

Measurement condition
PURY-EP450,500,500YSHM-A(1)(-BS)

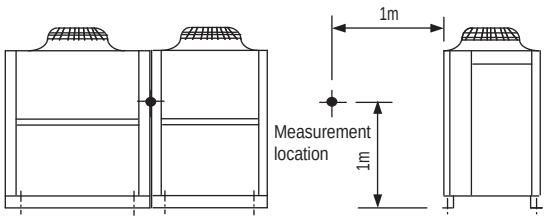

Sound level of PURY-EP400YSHM-A(-BS)

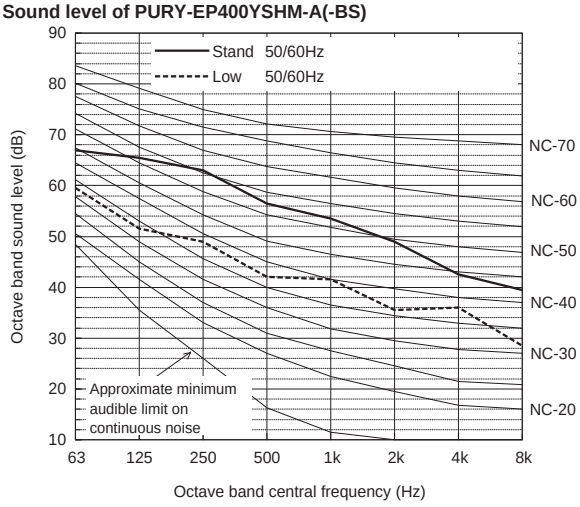

		63	125	250	500	1k	2k	4k	8k	dB(A)
Standard	50/60Hz	67.0	65.5	63.0	56.5	53.5	49.0	42.5	39.5	60.0
Low Noise Mode	50/60Hz	59.5	51.5	49.0	42.0	41.5	35.5	36.0	28.5	47.0

When Low Noise Mode is set,the A/C system's capacity is limited. The system could return to normal operation from Low Noise Mode automatically in the case that the operation condition is severe.

Sound level of PURY-EP450YSHM-A1(-BS)

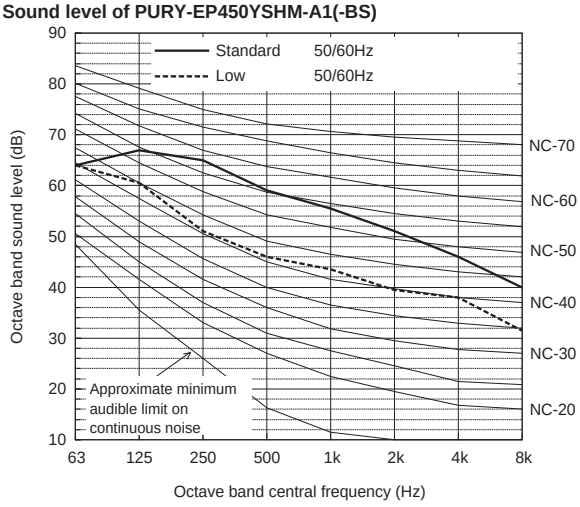

		63	125	250	500	1k	2k	4k	8k	dB(A)
Standard	50/60Hz	64.0	67.0	65.0	59.0	55.5	51.0	46.0	40.0	62.0
Low Noise Mode	50/60Hz	64.0	60.5	51.0	46.0	43.5	39.5	38.0	31.5	51.0

When Low Noise Mode is set,the A/C system's capacity is limited. The system could return to normal operation from Low Noise Mode automatically in the case that the operation condition is severe.

Sound level of PURY-EP500YSHM-A(-BS)

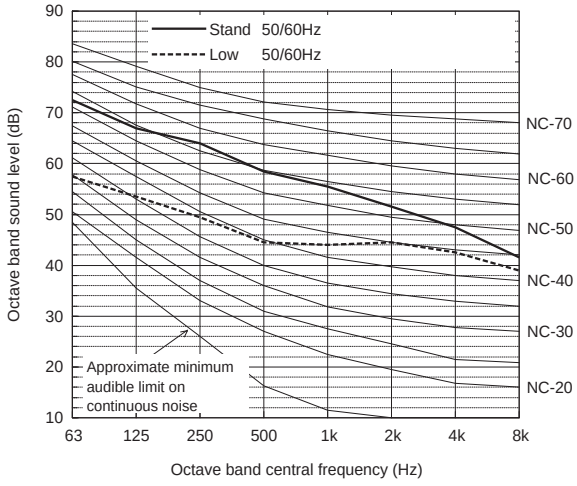

		63	125	250	500	1k	2k	4k	8k	dB(A)
Standard	50/60Hz	72.5	67.0	64.0	58.5	55.5	51.5	47.5	41.5	62.0
Low Noise Mode	50/60Hz	57.5	53.5	49.5	44.5	44.0	44.5	42.5	39.0	51.0

When Low Noise Mode is set,the A/C system's capacity is limited. The system could return to normal operation from Low Noise Mode automatically in the case that the operation condition is severe.

R2(HIGH

5. SOUND LEVELS

Measurement condition
PURY-EP550,600YSHM-A(1)(-BS)

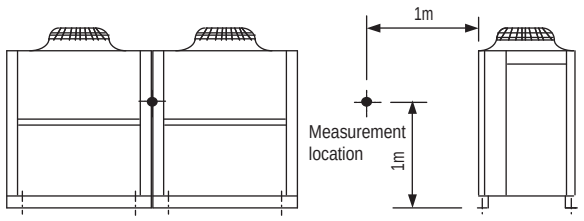

Sound level of PURY-EP550YSHM-A1(-BS)

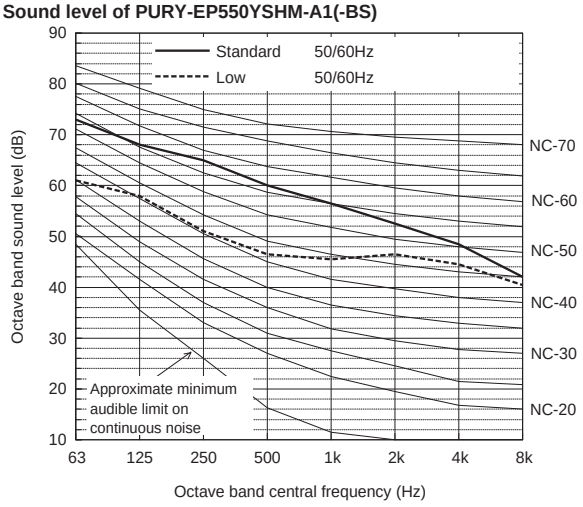

		63	125	250	500	1k	2k	4k	8k	dB(A)
Standard	50/60Hz	73.0	68.0	65.0	60.0	56.5	52.5	48.5	42.0	63.0
Low Noise Mode	50/60Hz	61.0	58.0	51.0	46.5	45.5	46.5	44.5	40.5	53.0

When Low Noise Mode is set,the A/C system's capacity is limited. The system could return to normal operation from Low Noise Mode automatically in the case that the operation condition is severe.

Sound level of PURY-EP600YSHM-A(-BS)

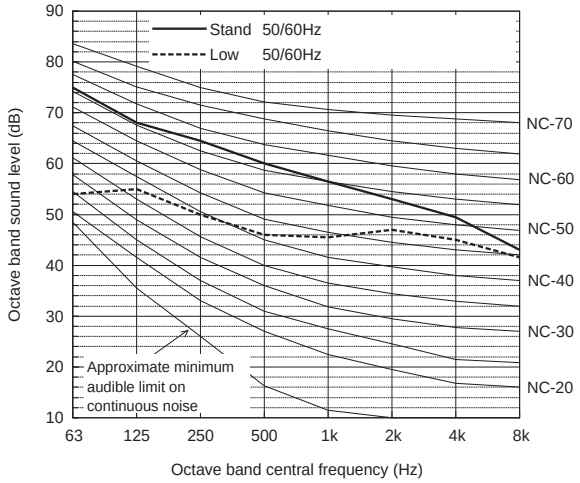

		63	125	250	500	1k	2k	4k	8k	dB(A)
Standard	50/60Hz	75.0	68.0	64.5	60.0	56.5	53.0	49.5	43.0	63.0
Low Noise Mode	50/60Hz	54.0	55.0	50.0	46.0	45.5	47.0	45.0	41.5	53.0

When Low Noise Mode is set,the A/C system's capacity is limited. The system could return to normal operation from Low Noise Mode automatically in the case that the operation condition is severe.

6. CAPACITY TABLES

6-1. Correction by temperature

CITY MULTI could have various capacities at different designing temperatures. Using the nominal cooling/heating capacity values and the ratios below, the capacity can be found for various temperatures.

PURY-		EP200YHM-A(-BS)	EP250YHM-A(-BS)
Nominal Cooling Capacity	kW	22.4	28.0
	BTU/h	76,400	95,500
Input	kW	5.23	6.86

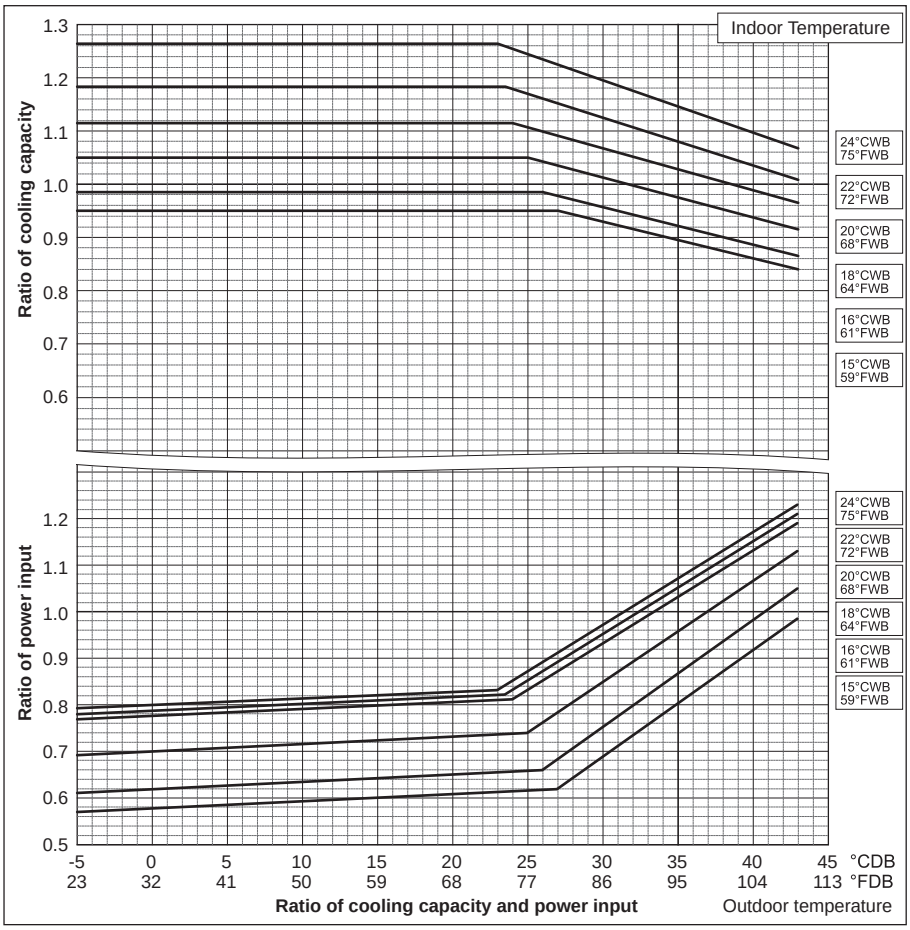

PURY-		EP200YHM-A(-BS)	EP250YHM-A(-BS)
Nominal Heating Capacity	kW	25.0	31.5
	BTU/h	85,300	107,500
Input	kW	5.81	7.60

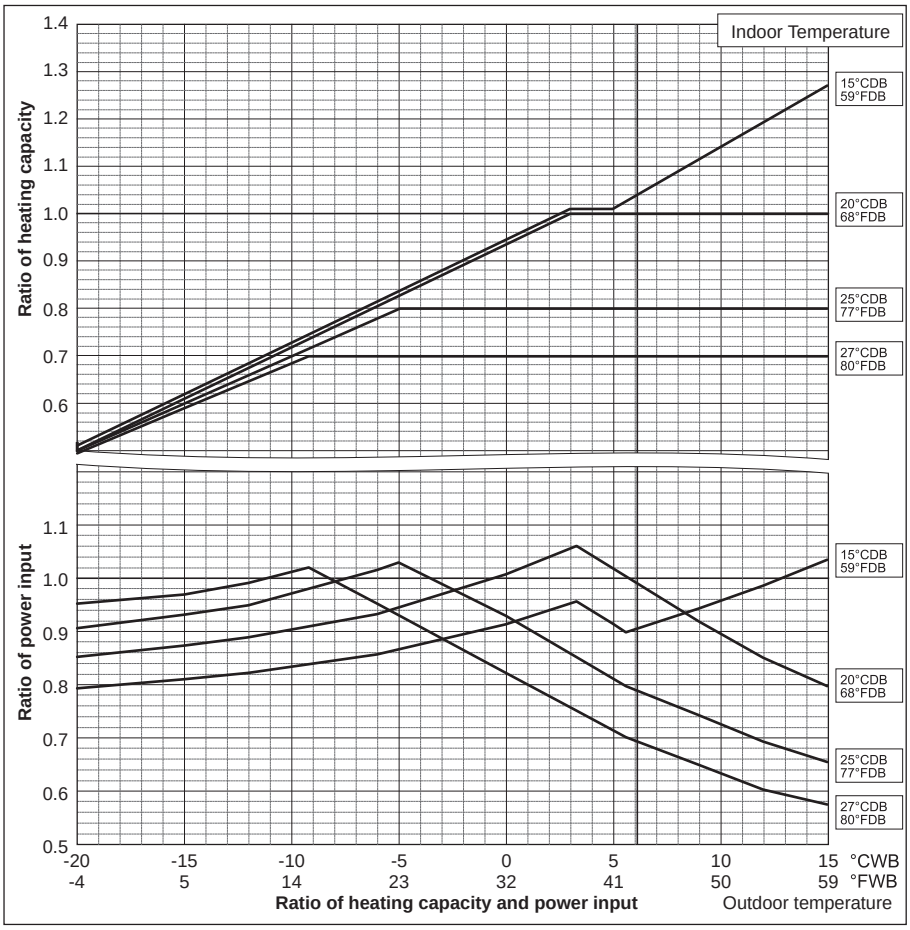

Ref:PURY_YHM-A_CbTMP_EUDB_EP200-EP250

R2(HIGH

PURY-		EP300YHM-A(-BS)	EP400YSHM-A(-BS)
Nominal Cooling Capacity	kW	33.5	45.0
	BTU/h	114,300	153,500
Input	kW	8.33	10.57

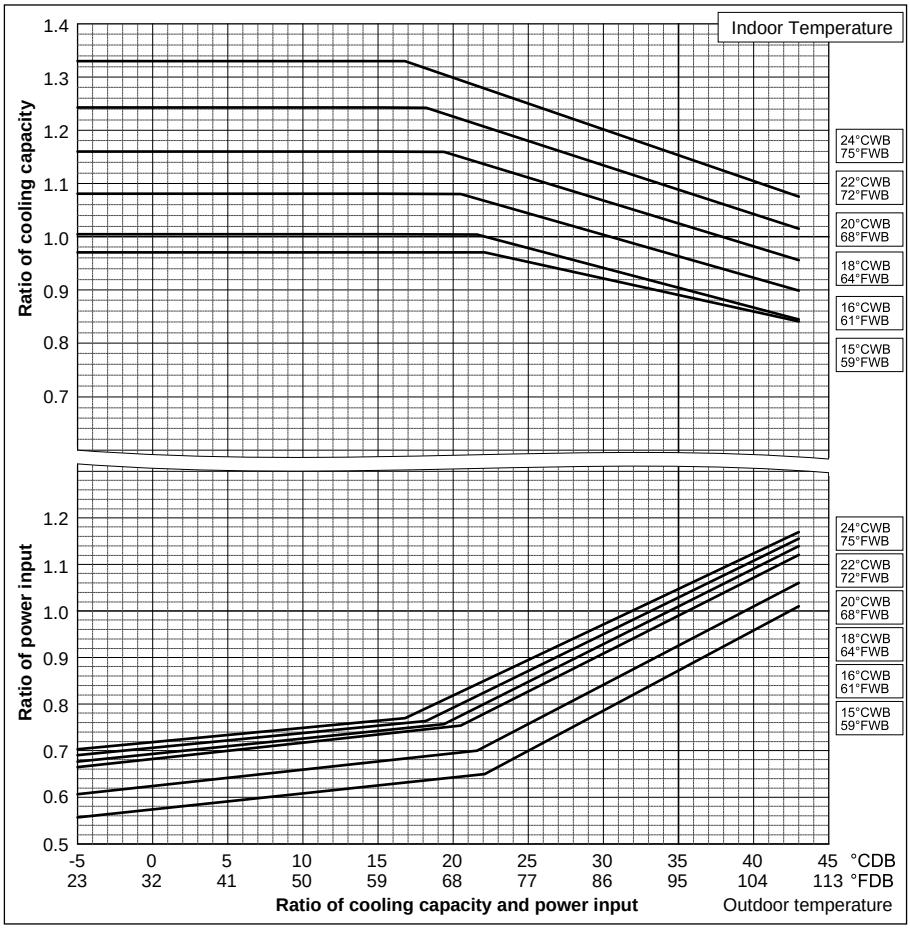

PURY-		EP300YHM-A(-BS)	EP400YSHM-A(-BS)
Nominal Heating Capacity	kW	37.5	50.0
	BTU/h	128,000	170,600
Input	kW	9.37	11.73

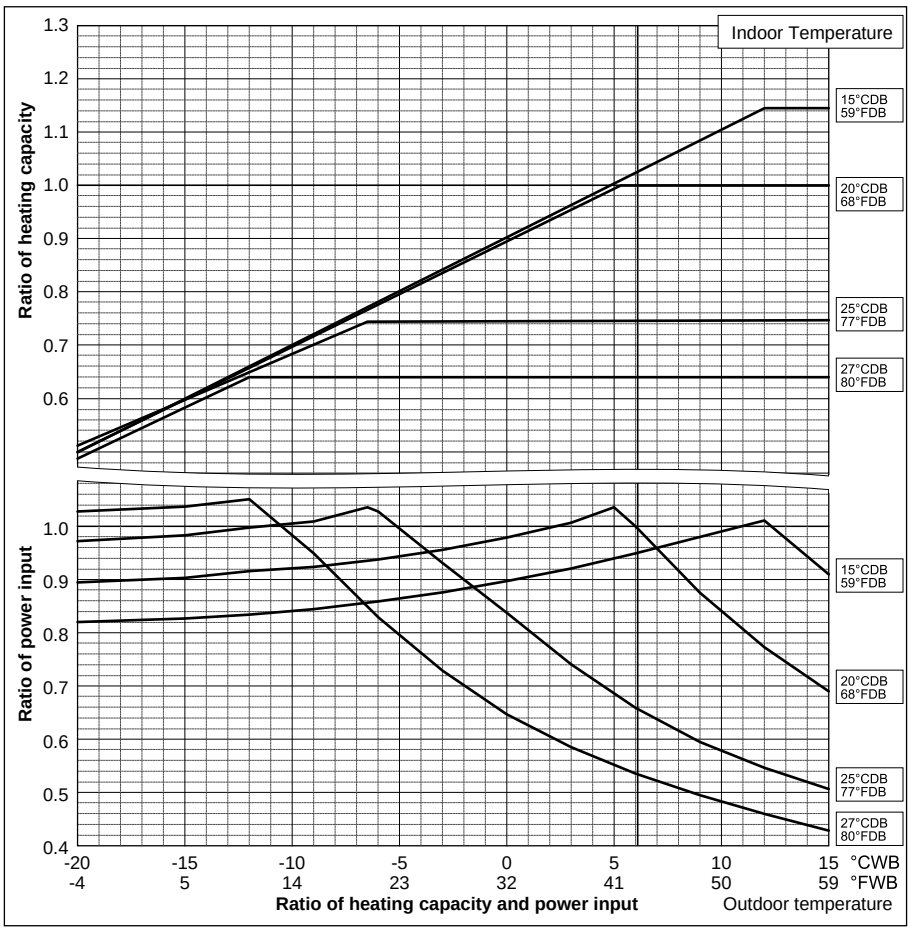

Ref:PURY_YHM-A_CbTMP_EUDB_EP300-P400

R2(HIGH COP)

6. CAPACITY TABLES

PURY-		EP450YSHM-A1(-BS)	EP500YSHM-A(-BS)
Nominal Cooling Capacity	kW	50.0	56.0
	BTU/h	170,600	191,100
Input	kW	12.07	13.70

PURY-		EP550YSHM-A1(-BS)	EP600YSHM-A(-BS)
Nominal Cooling Capacity	kW	63.0	69.0
	BTU/h	215,000	235,400
Input	kW	15.47	17.00

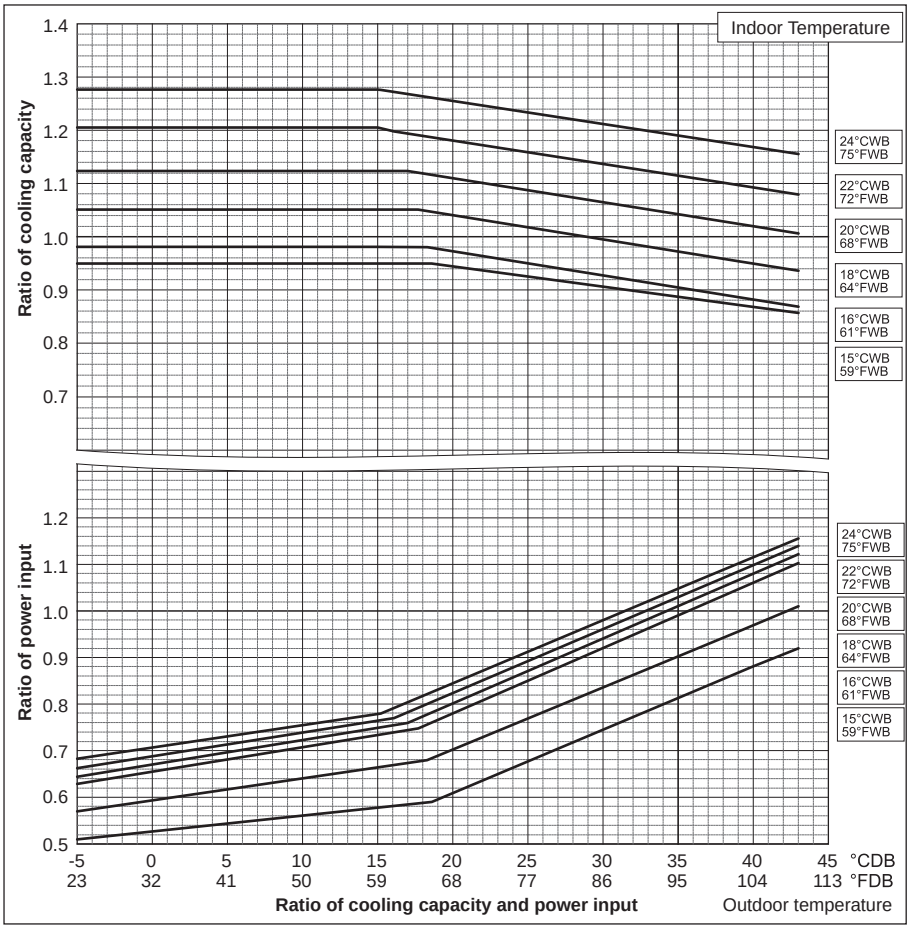

PURY-		EP450YSHM-A1(-BS)	EP500YSHM-A(-BS)
Nominal Heating Capacity	kW	56.0	63.0
	BTU/h	191,100	215,000
Input	kW	13.23	15.33

PURY-		EP550YSHM-A1(-BS)	EP600YSHM-A(-BS)
Nominal Heating Capacity	kW	69.0	76.5
	BTU/h	235,400	261,000
Input	kW	16.95	19.12

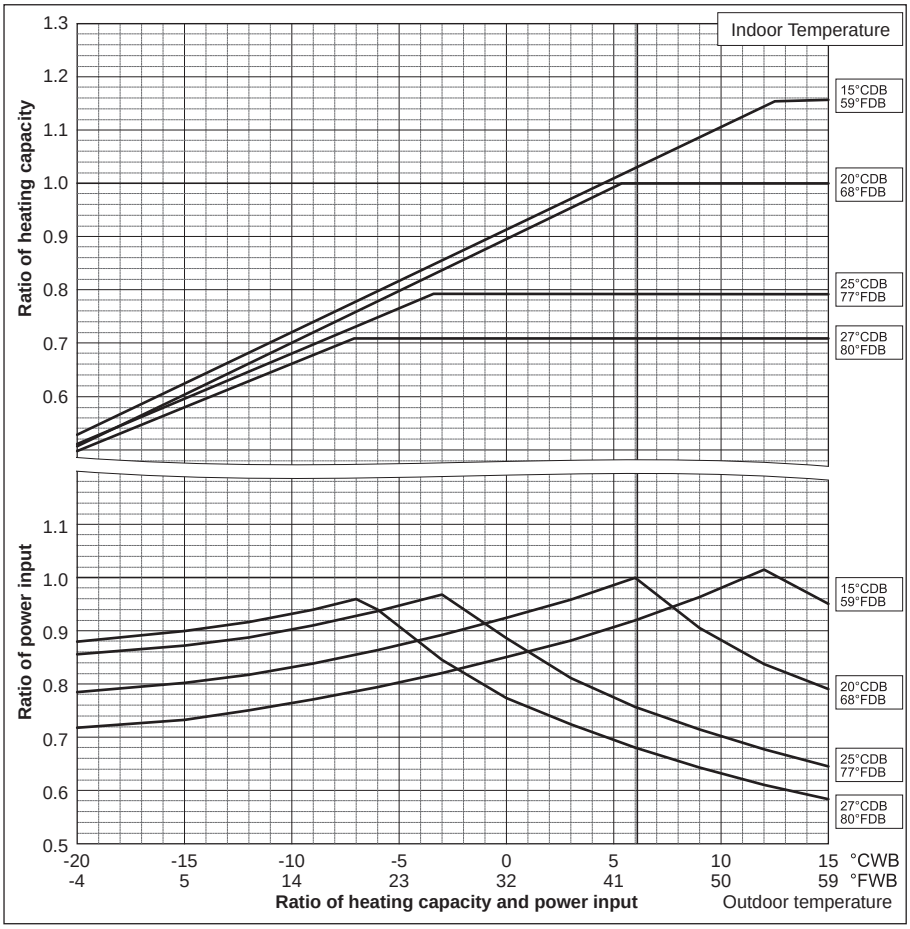

Ref:PURY_YHM-A_CbTMP_EUDB_EP450-EP600

R2(HIGH

6-2. Correction by total indoor

CITY MULTI system have different capacities and inputs when many combinations of indoor units with different total capacities are connected. Using following tables, the maximum capacity can be found to ensure the system is installed with enough capacity for a particular application.

PURY-EP200,250YHM-A(-BS)

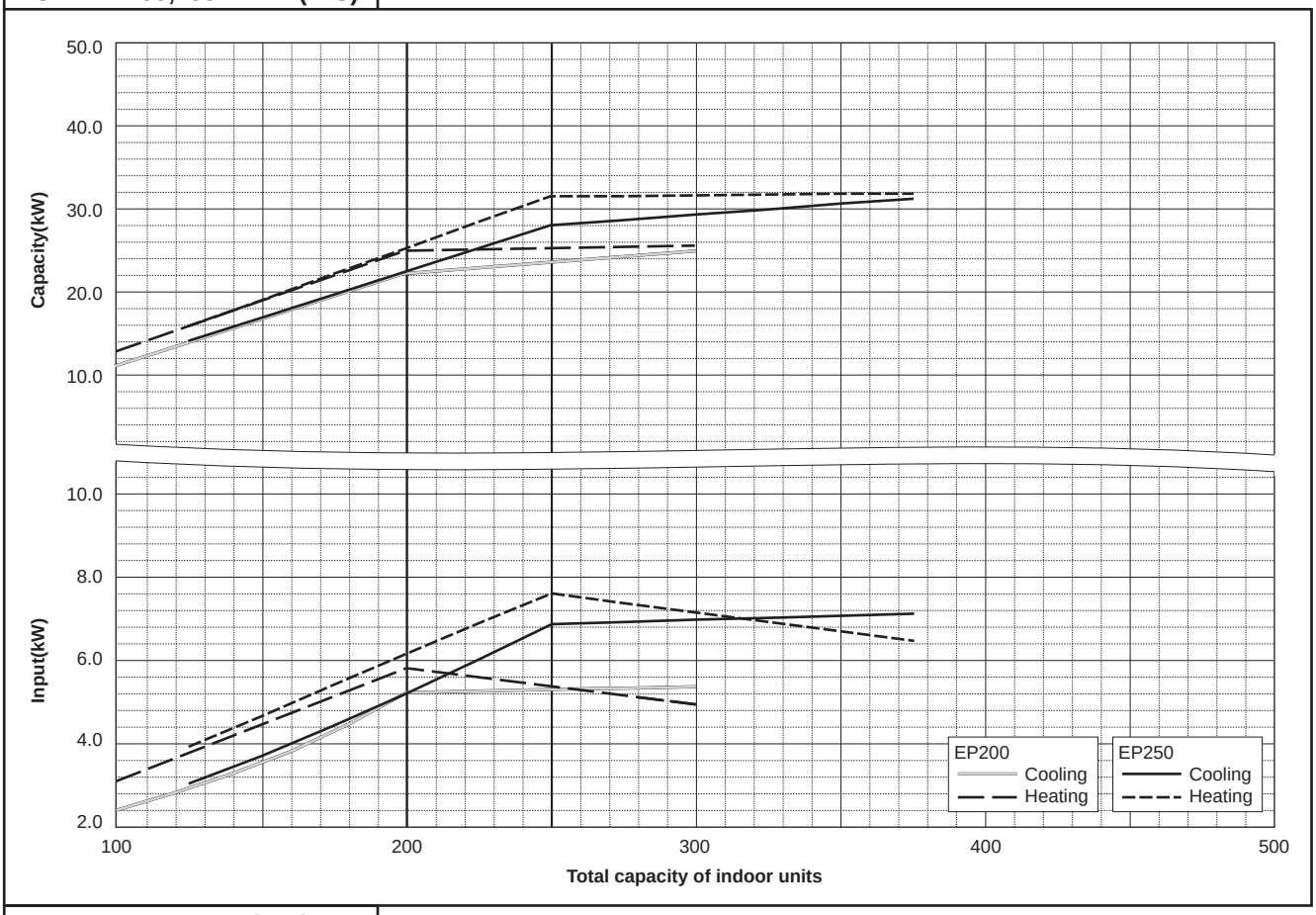

PURY-EP300YHM-A(-BS)

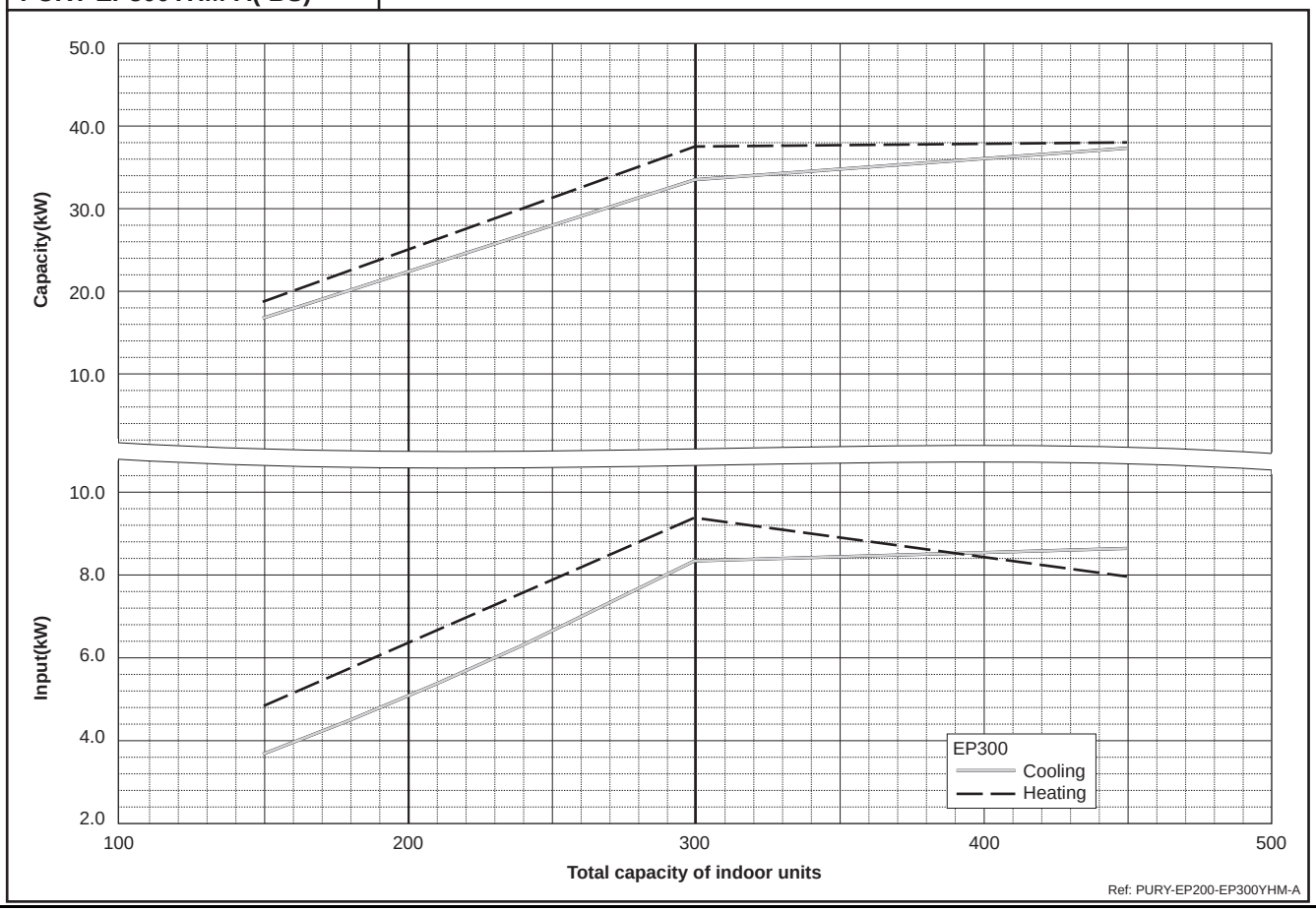

Ref: PURY-EP200-EP300YHM-A

R2(HIGH COP)

PURY-EP400,450YSHM-A(1)(-BS)

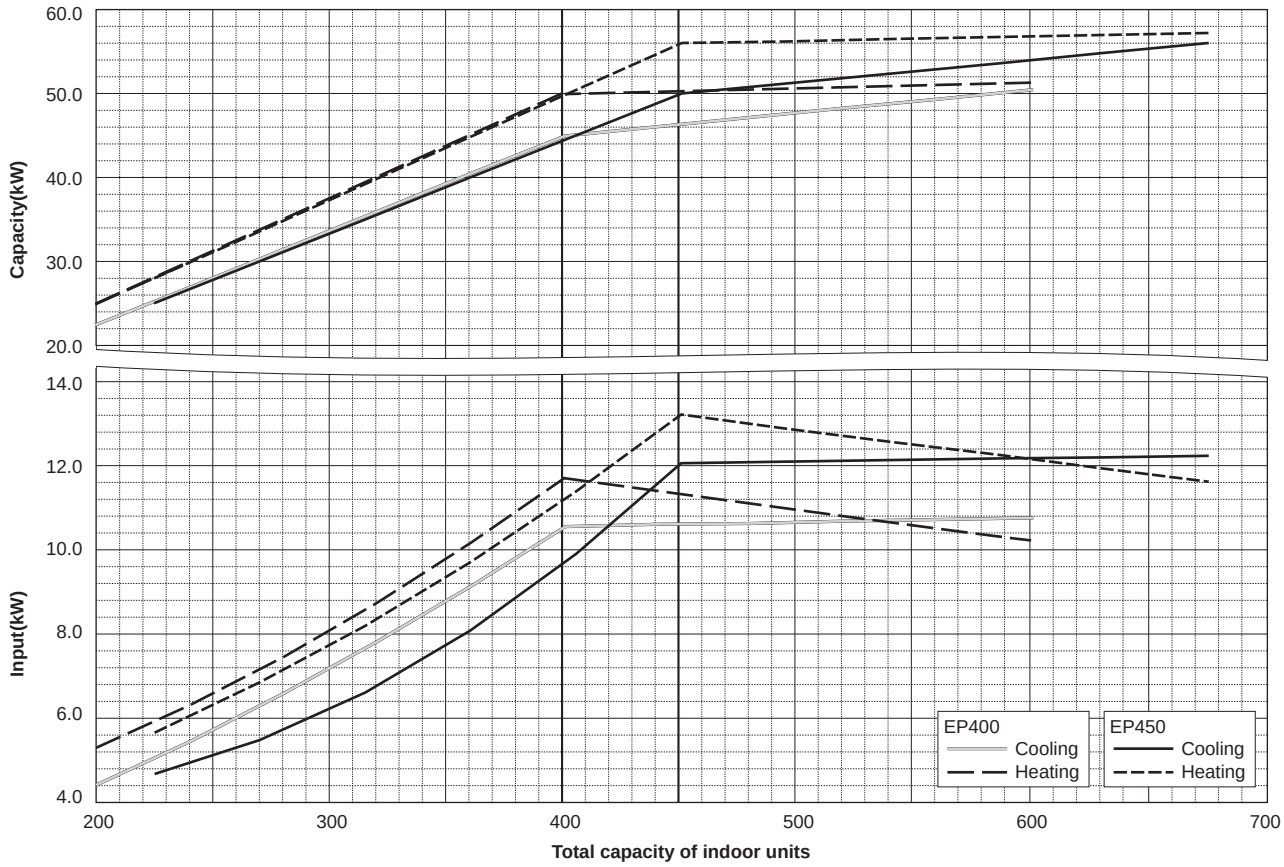

PURY-EP500,550YSHM-A(1)(-BS)

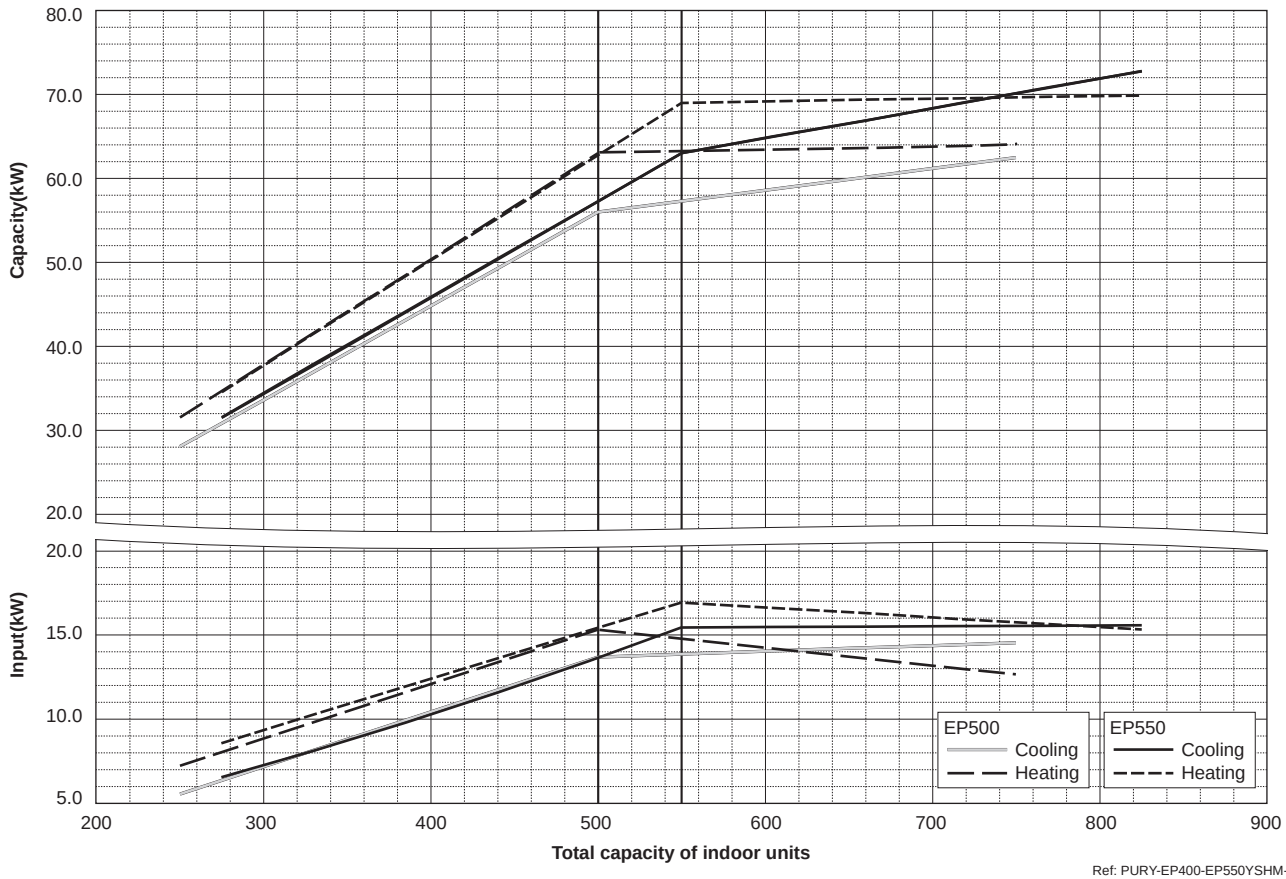

Ref: PURY-EP400-EP550YSHM-A

R2(HIGH

6-3. Correction by refrigerant piping length

CITY MULTI systems can have extended piping lengths if certain limitations are followed, but cooling/heating capacity could be reduced. Using following correction factor by equivalent piping length shown at 6-3-1 and 6-3-2, capacity can be found. 6-3-3 shows how to obtain the equivalent piping length.

6-3-1. Cooling capacity correction

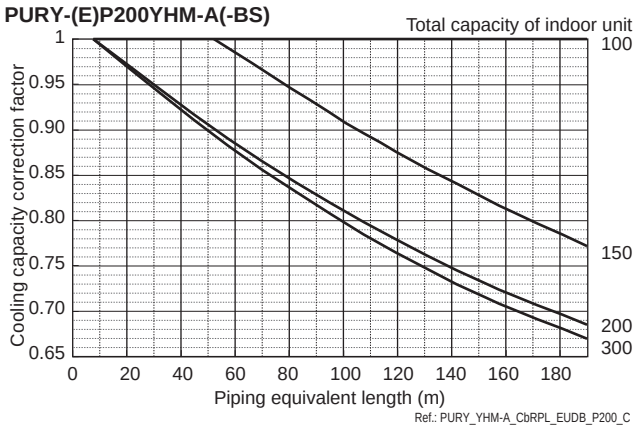

Ref.: PURY_YHM-A_CbRPL_EUDB_P200_C

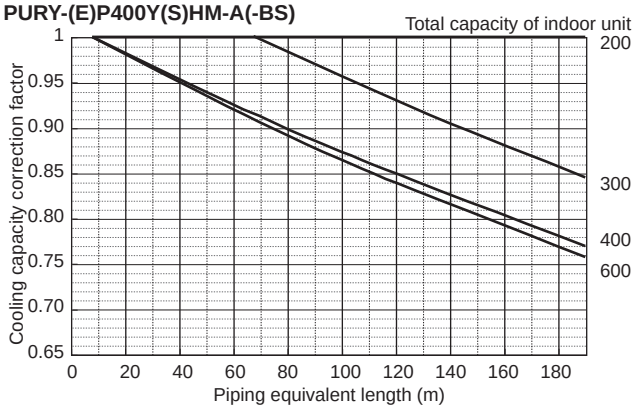

Ref.: PURY_YHM-A_CbRPL_EUDB_P400_C

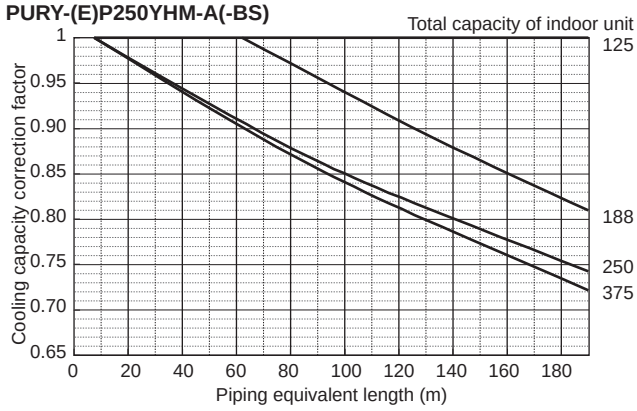

Ref.: PURY_YHM-A_CbRPL_EUDB_P250_C

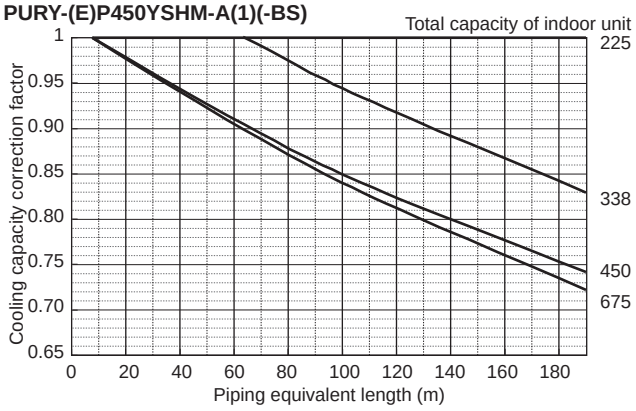

Ref.: PURY_YHM-A_CbRPL_EUDB_P450_C

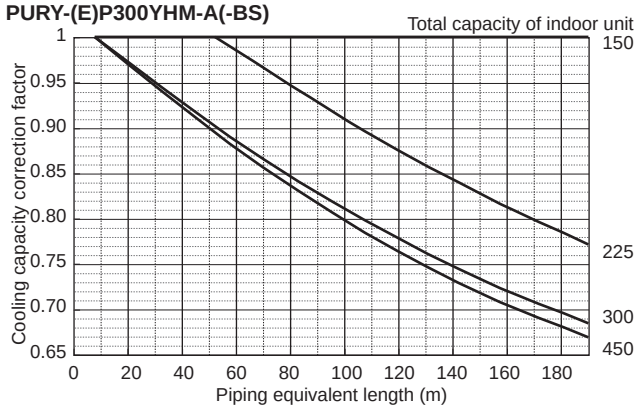

Ref.: PURY_YHM-A_CbRPL_EUDB_P300_C

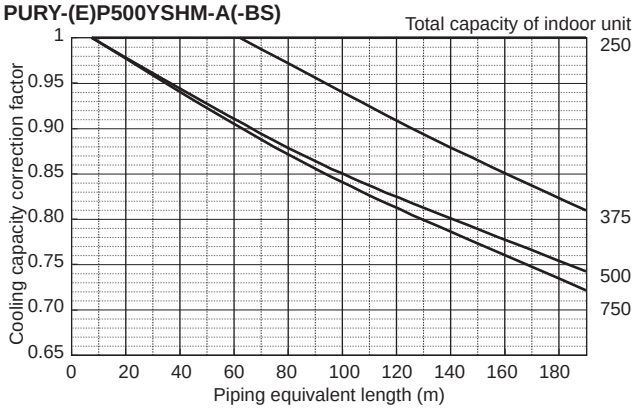

Ref.: PURY_YHM-A_CbRPL_EUDB_P500_C

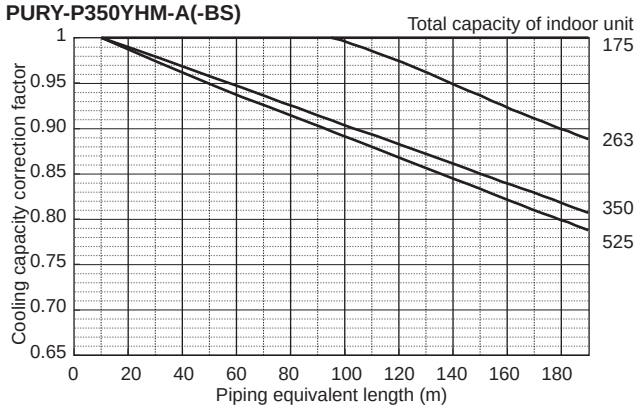

Ref.: PURY_YHM-A_CbRPL_EUDB_P350_C

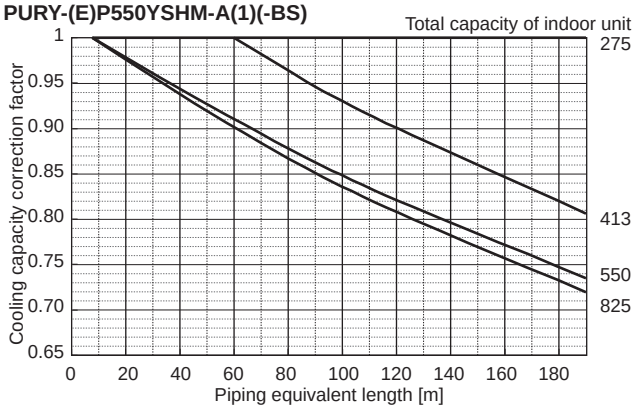

Ref.: PURY_YHM-A_CbRPL_EUDB_P550_C

R2(HIGH COP)

PURY-(E)P600YSHM-A(-BS)

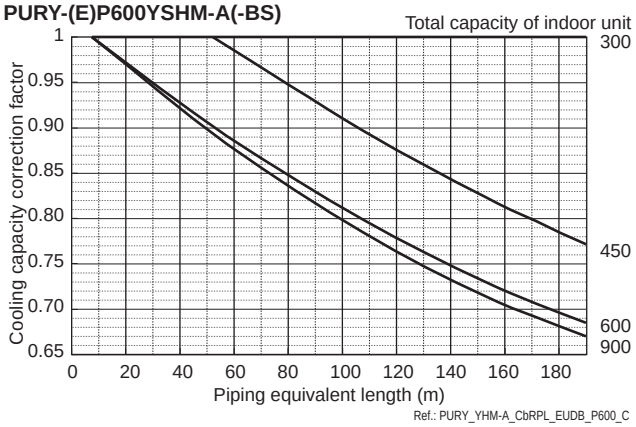

PURY-P750YSHM-A(-BS)

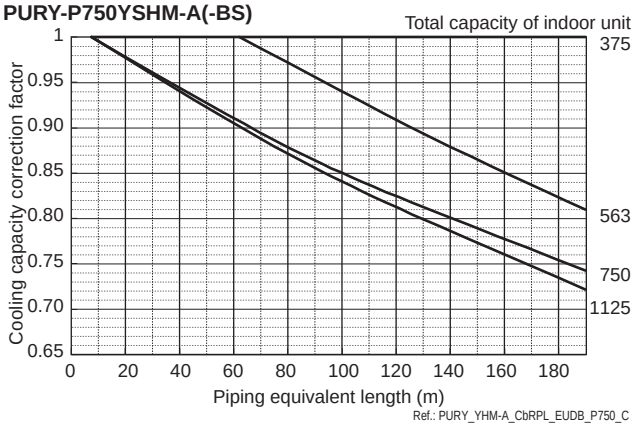

PURY-P650YSHM-A(-BS)

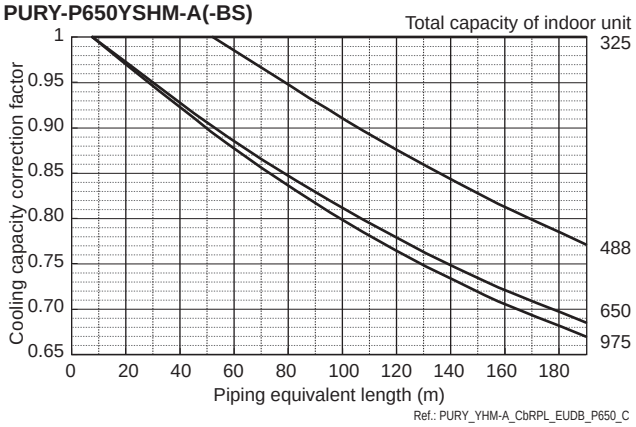

PURY-P800YSHM-A(-BS)

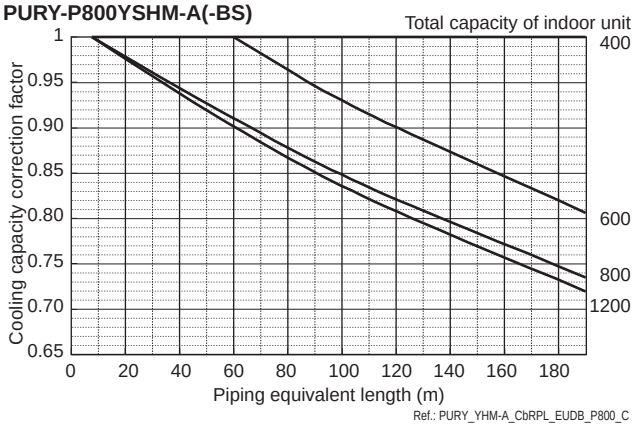

PURY-P700YSHM-A(-BS)

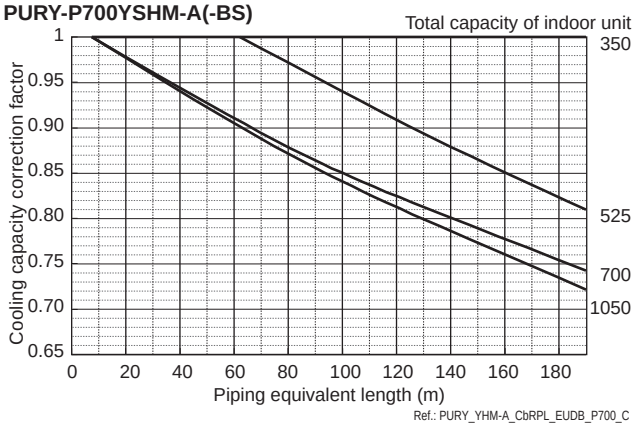

R2(HIGH

6-3-2. Heating capacity correction

PURY-(E)P200YHM-A(-BS)

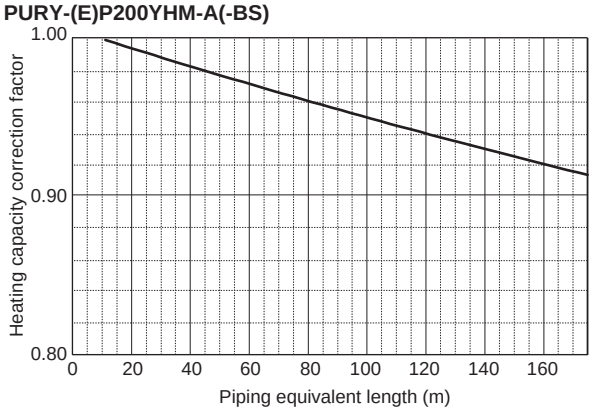

Ref.: PURY_YHM-A_CbRPL_EUDB_P200_H

PURY-(E)P450,500YSHM-A(1)(-BS)

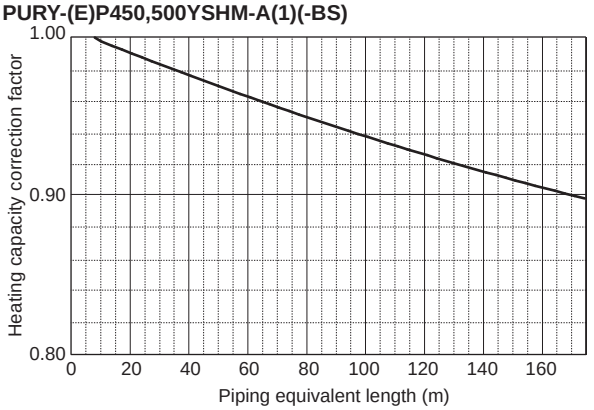

Ref.: PURY_YHM-A_CbRPL_EUDB_P450_H

PURY-(E)P250,300YHM-A(-BS)

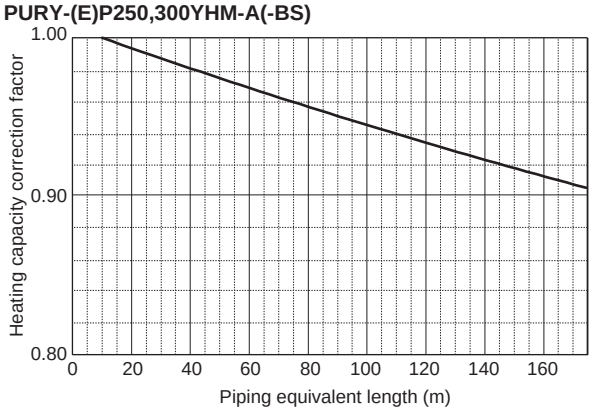

Ref.: PURY_YHM-A_CbRPL_EUDB_P250_H

PURY-(E)P550,600,650YSHM-A(1)(-BS)

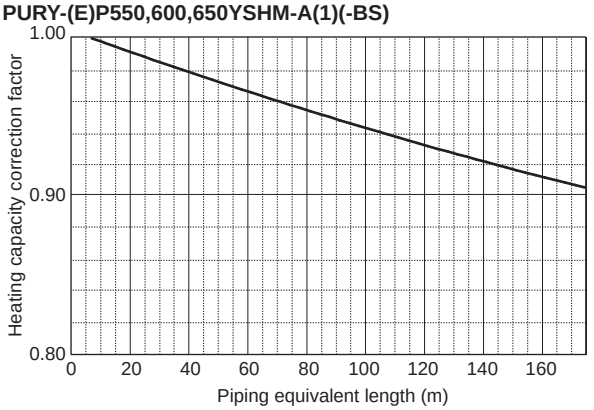

Ref.: PURY_YHM-A_CbRPL_EUDB_P550_H

PURY-P350YHM-A(-BS)

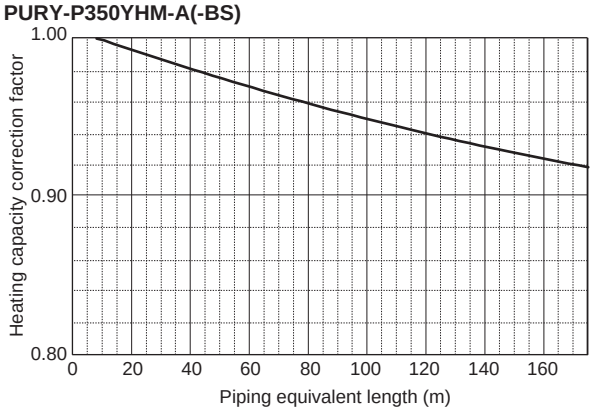

Ref.: PURY_YHM-A_CbRPL_EUDB_P350_H.

PURY-P700,750,800YSHM-A(-BS)

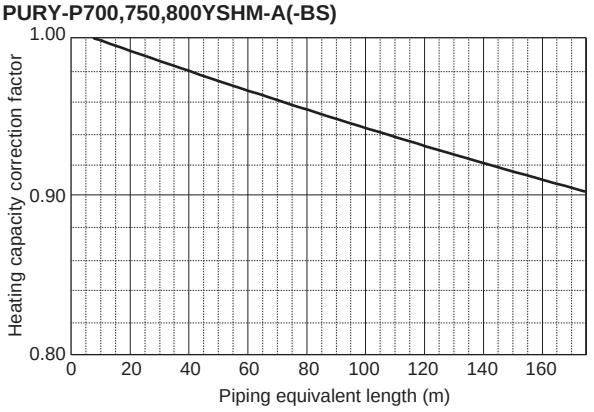

Ref.: PURY_YHM-A_CbRPL_EUDB_P700_H

PURY-(E)P400Y(S)HM-A(-BS)

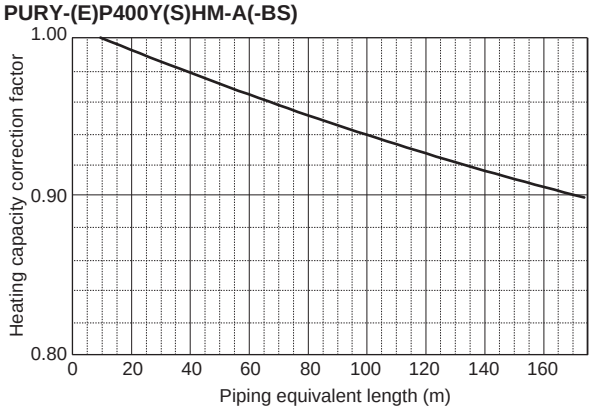

Ref.: PURY_YHM-A_CbRPL_EUDB_P400_H

R2(HIGH COP)

6-3-3. How to obtain the equivalent piping length

1 **PURY-(E)P200YHM-A(-BS)**
Equivalent length = (Actual piping length to the farthest indoor unit) + (0.35 x number of bends in the piping) m

2 **PURY-(E)P250,300YHM-A(-BS)**
Equivalent length = (Actual piping length to the farthest indoor unit) + (0.42 x number of bends in the piping) m

3 **PURY-P350YHM-A(-BS)**
Equivalent length = (Actual piping length to the farthest indoor unit) + (0.47 x number of bends in the piping) m

4 **PURY-(E)P400,450,500,550,600,650Y(S)HM-A(1)(-BS)**
Equivalent length = (Actual piping length to the farthest indoor unit) + (0.50 x number of bends in the piping) m

5 **PURY-P700,750,800YSHM-A(-BS)**
Equivalent length = (Actual piping length to the farthest indoor unit) + (0.70 x number of bends in the piping) m

Ref: PURY_YHM-A_EqPLTH_EUDB_ALL

6-4. Correction by port counts of the BC controller

Indoor unit sizes P200 and P250 must be connected to 2 ports on the BC controller.
Indoor unit sizes from P100 to P140 should normally be connected to 2 ports on the BC controller (set BC controller DIP-SW 4-6 to its ON position).
In cases whereby indoor unit sizes from P100 to P140 are connected to only 1port on the BC controller (set BC controller DIP-SW 4-6 to its OFF position), the cooling capacity of the indoor unit should be multiplied by a correction factor of **0.97.**

6-5. Correction at frost and defrost

Due to frost at the outdoor heat exchanger and the automatic defrost operation, the heating capacity of the outdoor unit can be calculated by multiplying the correction factor shown in the table below.

R2(HIGH

Table of correction factor at frosting and defrosting

Outdoor inlet air temp. °C	6	4	2	1	0	-2	-4	-6	-8	-10	-20
Outdoor inlet air temp. °F	43	39	36	34	32	28	25	21	18	14	-4
PURY-(E)P200YHM-A(-BS)	1.00	0.95	0.84	0.83	0.83	0.87	0.90	0.95	0.95	0.95	0.95
PURY-(E)P250YHM-A(-BS)	1.00	0.95	0.84	0.83	0.83	0.87	0.90	0.95	0.95	0.95	0.95
PURY-(E)P300YHM-A(-BS)	1.00	0.93	0.82	0.80	0.82	0.86	0.90	0.90	0.95	0.95	0.95
PURY-P350YHM-A(-BS)	1.00	0.93	0.85	0.83	0.84	0.86	0.90	0.90	0.95	0.95	0.95
PURY-(E)P400Y(S)HM-A(-BS)	1.00	0.95	0.90	0.87	0.88	0.89	0.90	0.95	0.95	0.95	0.95
PURY-(E)P450YSHM-A(1)(-BS)	1.00	0.98	0.89	0.87	0.89	0.90	0.92	0.95	0.95	0.95	0.95
PURY-(E)P500YSHM-A(-BS)	1.00	0.98	0.89	0.86	0.89	0.90	0.92	0.95	0.95	0.95	0.95
PURY-(E)P550YSHM-A(1)(-BS)	1.00	0.94	0.87	0.86	0.87	0.88	0.90	0.90	0.93	0.93	0.93
PURY-(E)P600YSHM-A(-BS)	1.00	0.94	0.84	0.86	0.87	0.88	0.90	0.90	0.93	0.93	0.93
PURY-P650YSHM-A(-BS)	1.00	0.94	0.84	0.86	0.87	0.88	0.90	0.90	0.93	0.93	0.93
PURY-P700YSHM-A(-BS)	1.00	0.98	0.89	0.88	0.89	0.90	0.92	0.95	0.95	0.95	0.95
PURY-P750YSHM-A(-BS)	1.00	0.98	0.89	0.88	0.89	0.90	0.92	0.95	0.95	0.95	0.95
PURY-P800YSHM-A(-BS)	1.00	0.98	0.89	0.88	0.89	0.90	0.92	0.95	0.95	0.95	0.95

Ref.: PURY_YHM-A_CbFROST_EUDB_ALL

6-6. Operation temperature range

• **Cooling**

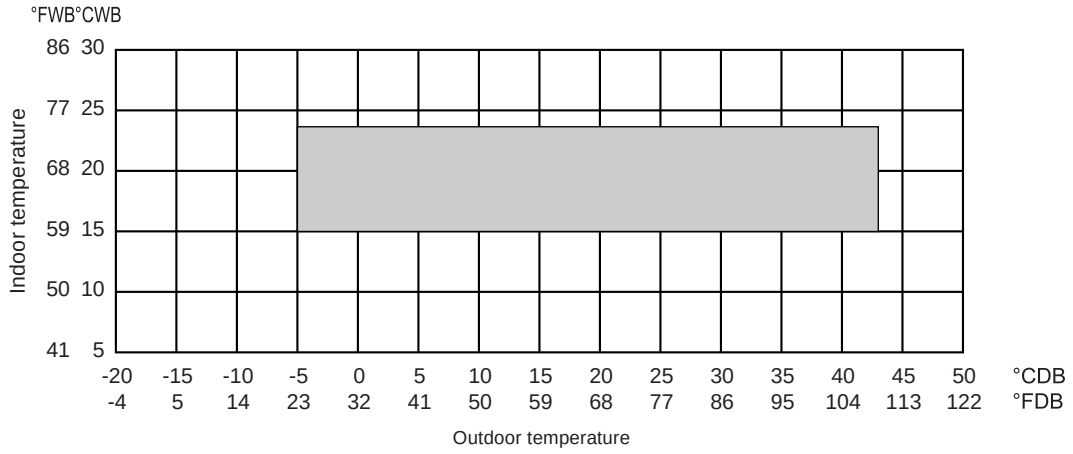

• **Heating**

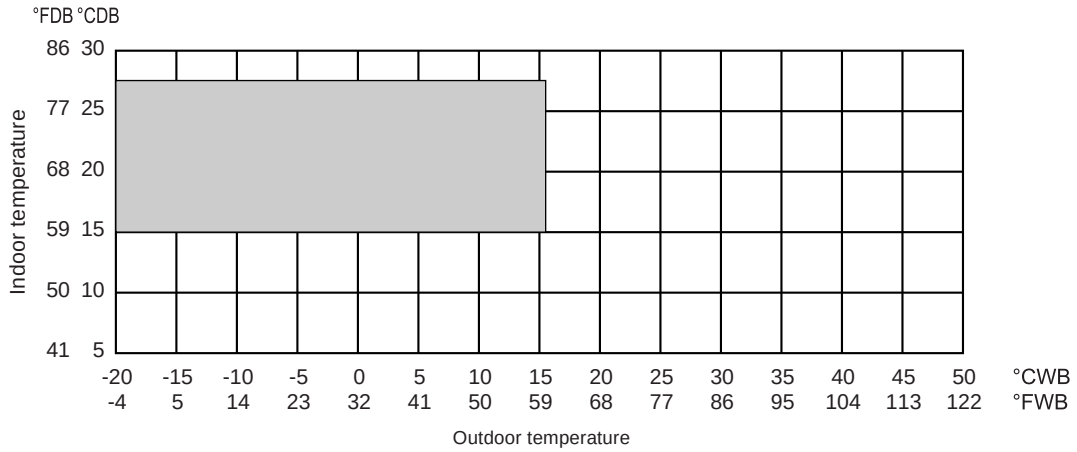

• **Combination of cooling/heating operation (Cooling main or Heating main)**

Outdoor temperature	Indoor temperature	
	Cooling	Heating
-5 to 21˚CDB (23 to 70˚FDB)	——	15 to 27˚CDB (59 to 81˚FDB)
-6 to 15.5˚CWB (21 to 60˚FWB)	15 to 24˚CWB (59 to 75˚FWB)	——

Ref.: PURY_YHM-A_TMPRNG_EUDB_ALL

R2(HIGH COP)

7. OPTIONAL PARTS

7-1. JOINT

Piping for CITY MULTI can be easily done with Joints and headers provided by MITSUBISHI ELECTRIC CORP..
There are 3 sets of Joints selectable for piping. Details for applying the Joint sets are referable to System Design 3, or their own Installation Manual.

CMY-Y102S-G2

Ref.: CMY_Y102S_G2_EXD_EUDB_SI
mm

For Gas pipe:

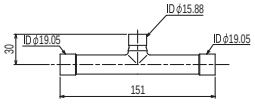

<Deformed pipe(Accessory)>

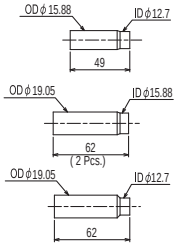

For Liquid pipe:

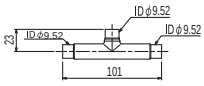

<Deformed pipe(Accessory)>

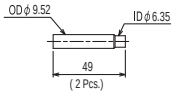

ID: Inner Diameter OD: Outer Diameter

CMY-Y102L-G2

Ref.: CMY_Y102L_G2_EXD_EUDB_SI
mm

For Gas pipe:

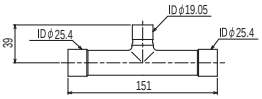

<Deformed pipe(Accessory)>

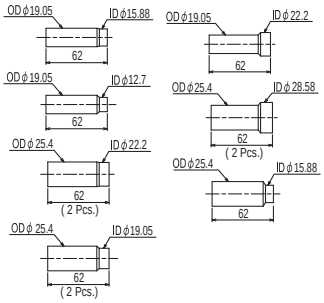

For Liquid pipe:

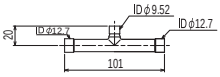

<Deformed pipe(Accessory)>

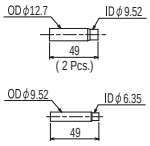

ID: Inner Diameter OD: Outer Diameter

CMY-Y202-G2

Ref.: CMY_Y202_G2_EXD_EUDB_SI
mm

For Gas pipe:

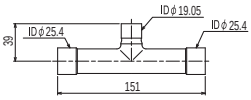

<Deformed pipe(Accessory)>

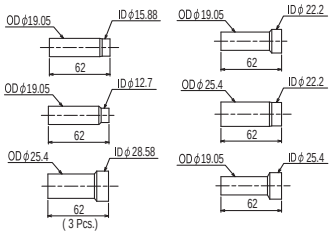

For Liquid pipe:

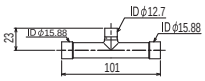

<Deformed pipe(Accessory)>

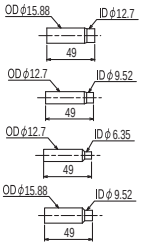

ID: Inner Diameter OD: Outer Diameter

R2(HIGH

7-2. OUTDOOR TWINNING KIT

For PURY-(E)P-YSHM-A, following optional Outdoor Twinning Kit is needed to use to combine to refrigerant flows of its PURY-(E)P-YHM-A. Details of selecting the proper kit should be referred to the System Design Section.

CMY-R100VBK

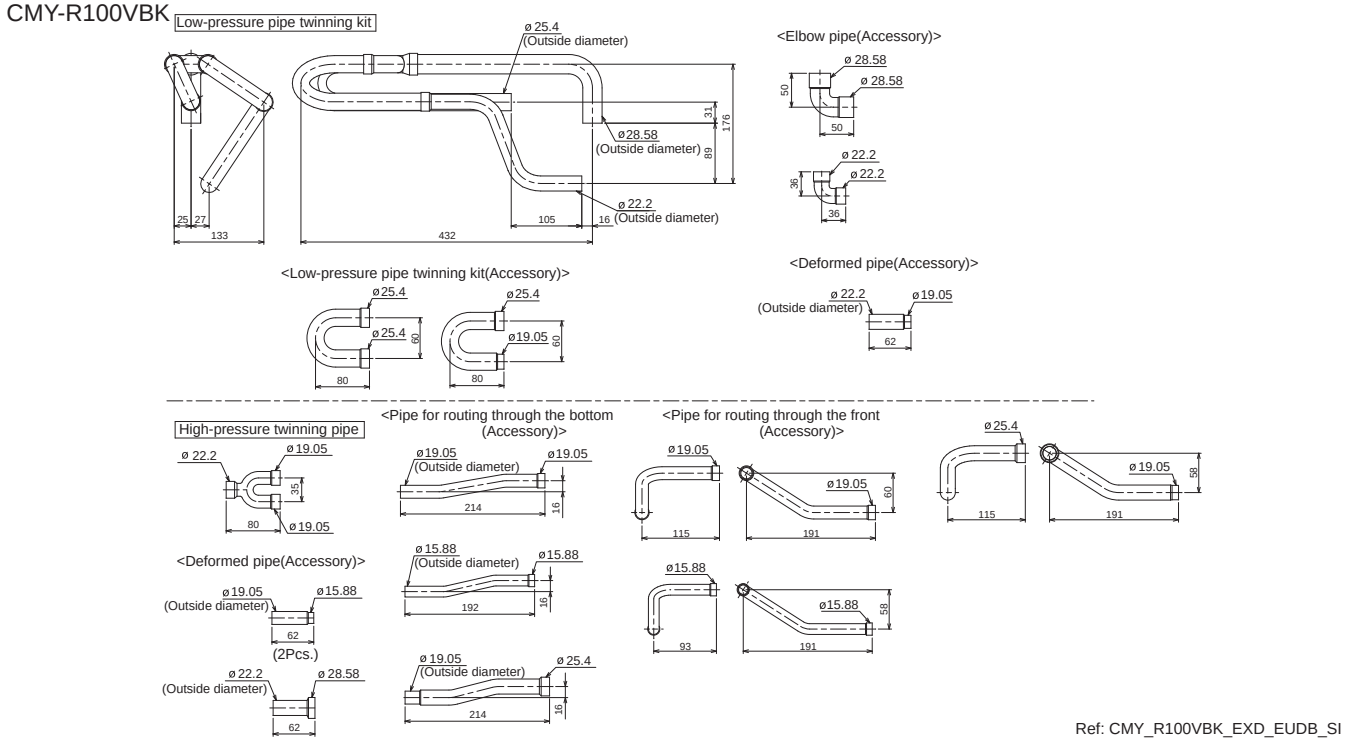

Ref: CMY_R100VBK_EXD_EUDB_SI

CMY-R200VBK

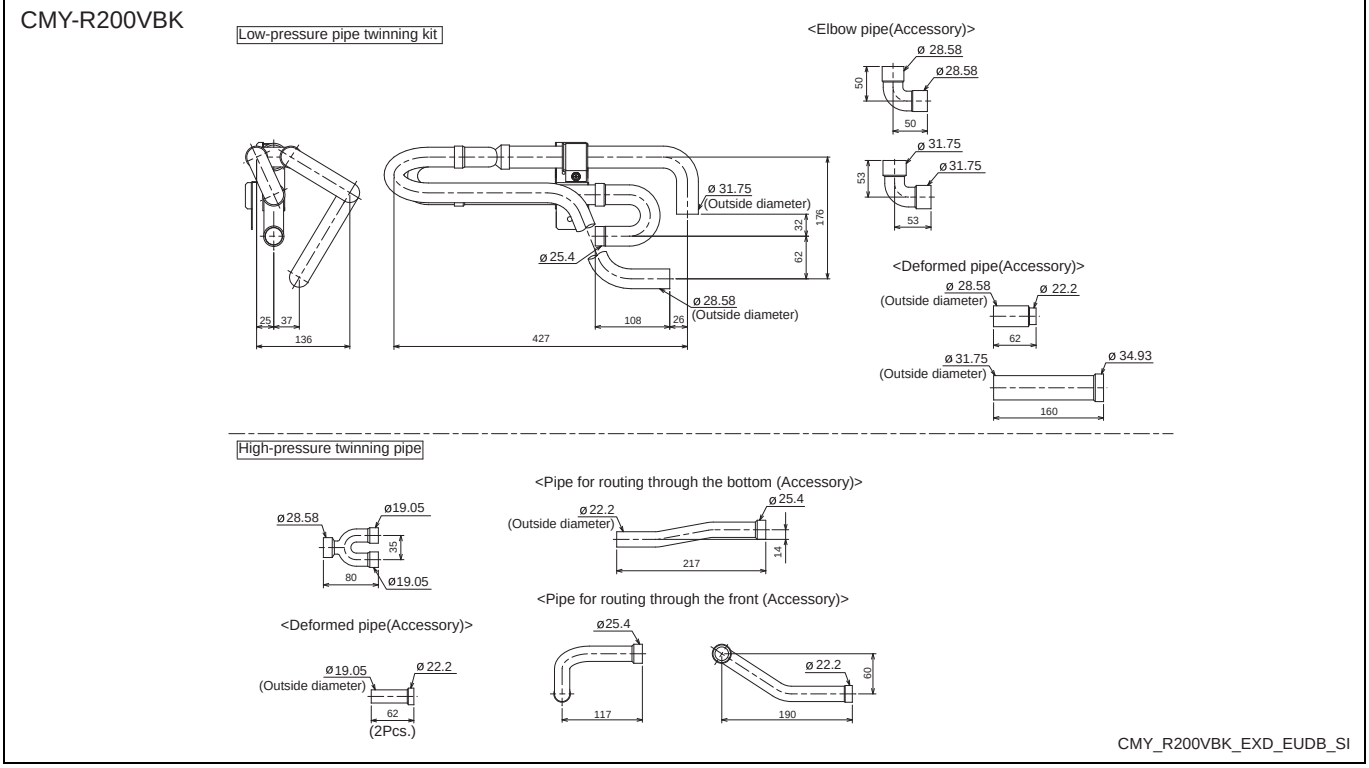

CMY_R200VBK_EXD_EUDB_SI

Note 1. Reference the attitude angle of the branch pipe below the fig.

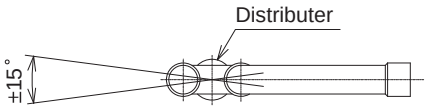

The angle of the branch pipe for hign pressure is within ±15° against the horizontal plane.

2. Use the attached pipe to braze the port-opening of the distributer.
3. Pipe diameter is indicated by inside diameter.

7-3. JOINT KIT CMY-R160-J1 FOR BC CONTROLLER

Joint kit "CMY-R160-J1" for BC controller is used to combine 2 ports of the BC controller at a PURY-(E)P-Y(S)HM-A system so as to enable down-stream Indoor capacity above P80 as shown in Fig. 1.

The Joint kit include following items:

①Instruction	②Joint pipe(Small)	③Joint pipe(Large)	④Cover 1	⑤Cover 2	⑥Cover 3	⑦Band	⑧Reducer 1	⑨Reducer 2
This sheet 1pc	1pc	1pc	2pcs	1pc for gas side	1pc for liquid side	8pcs	OD19.05-ID22.2 1pc	OD19.05-ID15.88 1pc

Please prepare the following items in the field. ①Tape for insulation material sealing ②Extension pipe for refrigerant circuit Ref.: WT05840X01_01

②Joint pipe (for liquid side) ③Joint pipe (for gas side) mm(in.)

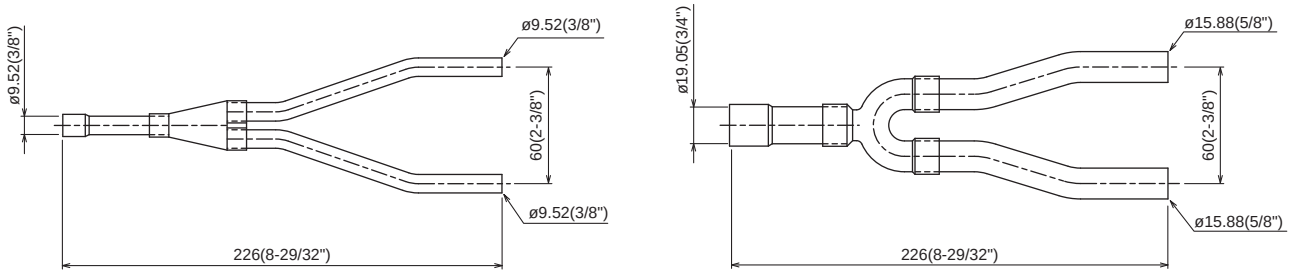

1. Designing CMY-R160-J1 to a PURY-(E)P-Y(S)HM-A system

The maximum down-stream Indoor capacity for 1 port of BC controller is P80. When the down-stream Indoor capacity is above P80, Joint kit CMY-R160-J1 is needed to combined 2 ports of BC controller to enlarge the capacity, like Group 2 and 3 in Fig. 1.

Maximum 3 Indoor units are allowed to connect to 1 port of BC controller or 2 combined ports of BC controller using CMY-R160-J1.

When connecting Indoor units to 1 port of BC controller or 2 combined ports of BC controller using CMY-R160-J1 or CMY-Y102S-G2 is applicable, like Group 1 and 2 in Fig. 1

Caution: Mixed cooling and heating mode at the same time for Indoor units connecting to 1 port or 2 combined ports is not available.

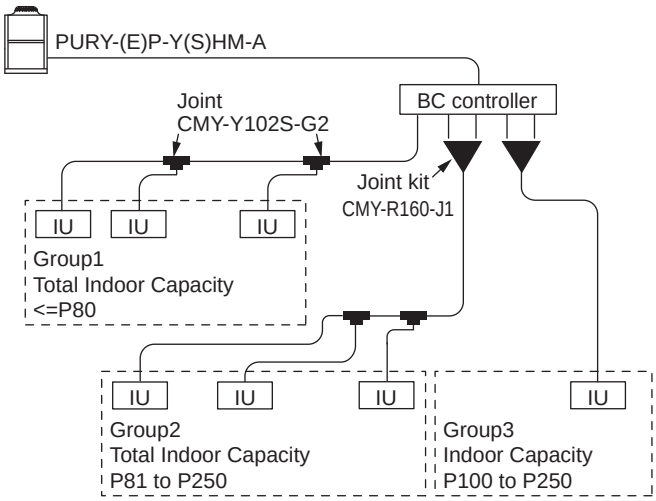

Fig.1. CMY-R160-J1 applying scheme Ref.: WT05840X01_02

2. Piping at the installation site

The connection of CMY-R160-J1 to BC controller and pipe leading to Indoor units is referable to Fig. 2. Non-oxidized brazing is necessary. All piping must be careful to avoid foreign material getting inside.

After piping and air-tight testing, insulation work to the Joint and pipe should be done. Details is available at the Installation Manual.

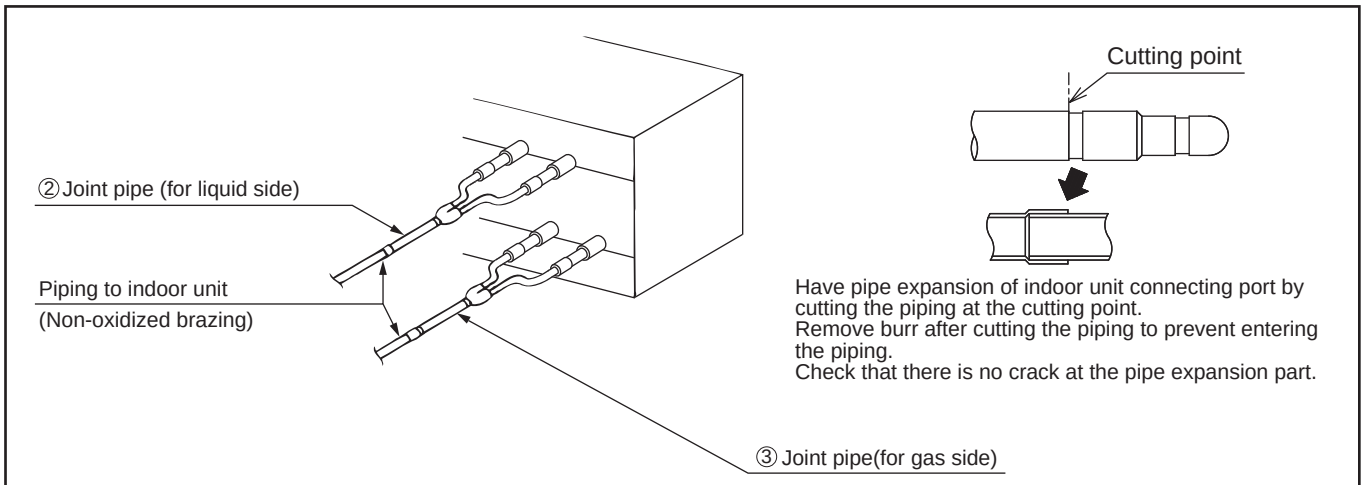

Fig.2. Connecting CMY-R160-J1 Ref.: WT05840X01_03

Ref: CMY_R160_J_DOC_EUDB

R2(HIGH

HEAT SOURCE UNITS

1. SPECIFICATIONS ..... 2 - 228
2. EXTERNAL DIMENSIONS ..... 2 - 241
3. CENTER OF GRAVITY ..... 2 - 244
4. ELECTRICAL WIRING DIAGRAMS ..... 2 - 245
5. SOUND LEVELS ..... 2 - 246
6. CAPACITY TABLES ..... 2 - 250
   6-1. Correction by temperature ..... 2 - 250
   6-2. Correction by total indoor ..... 2 - 264
   6-3. Correction by refrigerant piping length ..... 2 - 271
   6-4. Operation temperature range ..... 2 - 275
7. SYSTEM DESIGN GUIDE ..... 2 - 276
   7-1. Designing of water circuit system ..... 2 - 276
   7-2. Water piping work ..... 2 - 288
8. OPTIONAL PARTS ..... 2 - 290
   8-1. JOINT ..... 2 - 290
   8-2. HEADER ..... 2 - 292
   8-3. OUTDOOR TWINNING KIT ..... 2 - 293

1. SPECIFICATIONS

Model			PQHY-P200YHM-A	PQHY-P250YHM-A
Power source			3-phase 4-wire 380-400-415V 50/60Hz	3-phase 4-wire 380-400-415V 50/60Hz
Cooling capacity (Nominal)	*1	kW	22.4	28.0
	*1	kcal / h	19,300	24,100
	*1	BTU / h	76,400	95,500
	Power input	kW	3.92	5.45
	Current input	A	6.6-6.2-6.0	9.2-8.7-8.4
	COP	kW / kW	5.71	5.13
Temp. range of cooling	Indoor	W.B.	15.0 ~ 24.0°C(59 ~ 75°F)	15.0 ~ 24.0°C(59 ~ 75°F)
	Circulating water	°C	10.0 ~ 45.0°C(50 ~ 113°F)	10.0 ~ 45.0°C(50 ~ 113°F)
Heating capacity (Nominal)	*2	kW	25.0	31.5
	*2	kcal / h	21,500	27,100
	*2	BTU / h	85,300	107,500
	Power input	kW	4.12	5.80
	Current input	A	6.9-6.6-6.3	9.7-9.3-8.9
	COP	kW / kW	6.06	5.43
Temp. range of heating	Indoor	D.B.	15.0 ~ 27.0°C(59 ~ 81°F)	15.0 ~ 27.0°C(59 ~ 81°F)
	Circulating water	°C	10.0 ~ 45.0°C(50 ~ 113°F)	10.0 ~ 45.0°C(50 ~ 113°F)
Indoor unit connectable	Total capacity		50 ~ 130 % of heat source unit capacity	50 ~ 130 % of heat source unit capacity
	Model / Quantity		P15 ~ P250 / 1 ~ 17	P15 ~ P250 / 1 ~ 21
Sound pressure level (measured in anechoic room)		dB <A>	47	49
Refrigerant piping diameter	Liquid pipe	mm (in.)	9.52(3/8) Brazed	9.52(3/8) Brazed (12.7(1/2) Brazed,total length >= 90m)
	Gas pipe	mm (in.)	19.05(3/4) Brazed	22.2(7/8) Brazed
Circulating water	Water flow rate	m^3 / h	5.76	5.76
		L / min	96	96
		cfm	3.4	3.4
	Pressure drop	kPa	17	17
	Operating volume range	m^3 / h	4.5 ~ 7.2	4.5 ~ 7.2
Compressor	Type x Quantity		Inverter scroll hermetic compressor	Inverter scroll hermetic compressor
	Manufacture		AC&R Works, MITSUBISHI ELECTRIC CORPORATION	AC&R Works, MITSUBISHI ELECTRIC CORPORATION
	Starting method		Inverter	Inverter
	Motor output	kW	4.6	6.3
	Case heater	kW	0.035(240 V)	0.035(240 V)
	Lubricant		MEL32	MEL32
External finish			Acrylic painted steel plate	Acrylic painted steel plate
External dimension HxWxD		mm	1,160(1,100 without legs) x 880 x 550	1,160(1,100 without legs) x 880 x 550
		in.	45-11/16(43-5/16 without legs) x 34-11/16 x 21-11/16	45-11/16(43-5/16 without legs) x 34-11/16 x 21-11/16
Protection devices	High pressure protection		High pressure sensor, High pressure switch at 4.15MPa (601 psi)	High pressure sensor, High pressure switch at 4.15MPa (601 psi)
	Inverter circuit (COMP.)		Over-heat protection, Over-current protection	Over-heat protection, Over-current protection
	Compressor		Over-heat protection	Over-heat protection
Refrigerant	Type x original charge		R410A x 5.0kg (12lbs)	R410A x 5.0kg (12lbs)
	Control		Indoor LEV and BC controller	Indoor LEV and BC controller
Net weight		kg (lbs)	195(430)	195(430)
Heat exchanger			plate type	plate type
	Water volume in plate	l	5.0	5.0
	Water pressure Max.	MPa	1.0	1.0
HIC circuit (HIC: Heat Inter-Changer)			-	-
Drawing	External		KB94T222	KB94T222
	Wiring		KE94C317	KE94C317
Standard attachment	Document		Installation Manual	Installation Manual
	Accessory		Refrigerant conn. pipe	Refrigerant conn. pipe
Optional parts			Joint: CMY-Y102S-G2 Header: CMY-Y104/108/1010-G	Joint: CMY-Y102S-G2, CMY-Y102L-G2 Header: CMY-Y104/108/1010-G
Remarks	●.Details on foundation work, duct work, insulation work, electrical wiring, power source switch, and other items shall be referred to the Installation Manual. ●.Due to continuing improvement, above specifications may be subject to change without notice. ●.The ambient temperature of the heat source unit needs to be kept below 40°C D.B. ●.The ambient relative humidity of the heat source unit needs to be kept below 80%. ●.The heat source Unit should not be installed at outdoor. ●.Be sure to mount a strainer (more than 50 meshes) at the water inlet piping of the unit. ●.Be sure to provide interlocking for the unit operation and water circuit.				

Notes :

1.Nominal cooling conditions(subject to JIS B8615-1)
Indoor:27°CDB/19°CWB(81°FDB/66°FWB), Water temperature:30°C(86°F)
Pipe length:7.5m(24-9/16ft.), Level difference:0m(0ft.)

2.Nominal heating conditions(subject to JIS B8615-1)
Indoor:20°CDB(68°FDB), Water temperature:20°C(68°F)
Pipe length:7.5m(24-9/16ft.), Level difference:0m(0ft.)

Unit converter	
kcal	=kW x 860
BTU/h	=kW x 3,412
cfm	=m^3/min x 35.31
lbs	=kg / 0.4536

*The specification data is subject to rounding variation.

WY

1. SPECIFICATIONS

Model			**PQHY-P300YHM-A**
Power source			3-phase 4-wire 380-400-415V 50/60Hz
Cooling capacity (Nominal)	*1	kW	33.5
	*1	kcal / h	28,800
	*1	BTU / h	114,300
	Power input	kW	7.36
	Current input	A	12.4-11.8-11.3
	COP	kW / kW	4.55
Temp. range of cooling	Indoor	W.B.	15.0 ~ 24.0°C(59 ~ 75°F)
	Circulating water	°C	10.0 ~ 45.0°C(50 ~ 113°F)
Heating capacity (Nominal)	*2	kW	37.5
	*2	kcal / h	32,300
	*2	BTU / h	128,000
	Power input	kW	8.15
	Current input	A	13.7-13.0-12.5
	COP	kW / kW	4.60
Temp. range of heating	Indoor	D.B.	15.0 ~ 27.0°C(59 ~ 81°F)
	Circulating water	°C	10.0 ~ 45.0°C(50 ~ 113°F)
Indoor unit connectable	Total capacity		50 ~ 130 % of heat source unit capacity
	Model / Quantity		P15 ~ P250 / 1 ~ 26
Sound pressure level (measured in anechoic room)		dB <A>	50
Refrigerant piping diameter	Liquid pipe	mm (in.)	9.52(3/8) Brazed (12.7(1/2) Brazed,total length >= 40m)
	Gas pipe	mm (in.)	22.2(7/8) Brazed
Circulating water	Water flow rate	m^3 / h	5.76
		L / min	96
		cfm	3.4
	Pressure drop	kPa	17
	Operating volume range	m^3 / h	4.5 ~ 7.2
Compressor	Type x Quantity		Inverter scroll hermetic compressor
	Manufacture		AC&R Works, MITSUBISHI ELECTRIC CORPORATION
	Starting method		Inverter
	Motor output	kW	7.4
	Case heater	kW	0.035(240 V)
	Lubricant		MEL32
External finish			Acrylic painted steel plate
External dimension HxWxD		mm	1,160(1,100 without legs) x 880 x 550
		in.	45-11/16(43-5/16 without legs) x 34-11/16 x 21-11/16
Protection devices	High pressure protection		High pressure sensor, High pressure switch at 4.15MPa (601 psi)
	Inverter circuit (COMP.)		Over-heat protection, Over-current protection
	Compressor		Over-heat protection
Refrigerant	Type x original charge		R410A x 5.0kg (12lbs)
	Control		Indoor LEV and BC controller
Net weight		kg (lbs)	195(430)
Heat exchanger			plate type
	Water volume in plate	l	5.0
	Water pressure Max.	MPa	1.0
HIC circuit (HIC: Heat Inter-Changer)			-
Drawing	External		KB94T222
	Wiring		KE94C317
Standard attachment	Document		Installation Manual
	Accessory		Refrigerant conn. pipe
Optional parts			Joint: CMY-Y102S-G2,CMY-Y102L-G2 Header: CMY-Y104/108/1010-G
Remarks	●.Details on foundation work, duct work, insulation work, electrical wiring, power source switch, and other items shall be referred to the Installation Manual. ●.Due to continuing improvement, above specifications may be subject to change without notice. ●.The ambient temperature of the heat source unit needs to be kept below 40°C D.B. ●.The ambient relative humidity of the heat source unit needs to be kept below 80%. ●.The heat source Unit should not be installed at outdoor. ●.Be sure to mount a strainer (more than 50 meshes) at the water inlet piping of the unit. ●.Be sure to provide interlocking for the unit operation and water circuit.			

Notes :

1.Nominal cooling conditions(subject to JIS B8615-1)
Indoor:27°CDB/19°CWB(81°FDB/66°FWB), Water temperature:30°C(86°F)
Pipe length:7.5m(24-9/16ft.), Level difference:0m(0ft.)

2.Nominal heating conditions(subject to JIS B8615-1)
Indoor:20°CDB(68°FDB), Water temperature:20°C(68°F)
Pipe length:7.5m(24-9/16ft.), Level difference:0m(0ft.)

Unit converter	
kcal	=kW x 860
BTU/h	=kW x 3,412
cfm	=m^3/min x 35.31
lbs	=kg / 0.4536

*The specification data is subject to rounding variation.

WY

1. SPECIFICATIONS

Model			PQHY-P400YSHM-A
Power source			3-phase 4-wire 380-400-415V 50/60Hz
Cooling capacity (Nominal)	*1	kW	45.0
	*1	kcal / h	38,700
	*1	BTU / h	153,500
	Power input	kW	8.25
	Current input	A	13.9-13.2-12.7
	COP	kW / kW	5.45
Temp. range of cooling	Indoor	W.B.	15.0 ~ 24.0°C(59 ~ 75°F)
	Circulating water	°C	10.0 ~ 45.0°C(50 ~ 113°F)
Heating capacity (Nominal)	*2	kW	50.0
	*2	kcal / h	43,000
	*2	BTU / h	170,600
	Power input	kW	8.65
	Current input	A	14.6-13.8-13.3
	COP	kW / kW	5.78
Temp. range of heating	Indoor	D.B.	15.0 ~ 27.0°C(59 ~ 81°F)
	Circulating water	°C	10.0 ~ 45.0°C(50 ~ 113°F)
Indoor unit connectable	Total capacity		50 ~ 130 % of heat source unit capacity
	Model / Quantity		P15 ~ P250 / 1 ~ 34
Sound pressure level (measured in anechoic room)		dB <A>	50
Refrigerant piping diameter	Liquid pipe	mm (in.)	12.7(1/2) Brazed
	Gas pipe	mm (in.)	28.58(1-1/8) Brazed

Set Model

Model			PQHY-P200YHM-A	PQHY-P200YHM-A
Circulating water	Water flow rate	m^3 / h	5.76 + 5.76	
		L / min	96 + 96	
		cfm	3.4 + 3.4	
	Pressure drop	kPa	17	17
	Operating volume range	m^3 / h	4.5 + 4.5 ~ 7.2 + 7.2	
Compressor	Type x Quantity		Inverter scroll hermetic compressor	Inverter scroll hermetic compressor
	Manufacture		AC&R Works, MITSUBISHI ELECTRIC CORPORATION	AC&R Works, MITSUBISHI ELECTRIC CORPORATION
	Starting method		Inverter	Inverter
	Motor output	kW	4.6	4.6
	Case heater	kW	0.035(240 V)	0.035(240 V)
	Lubricant		MEL32	MEL32
External finish			Acrylic painted steel plate	Acrylic painted steel plate
External dimension HxWxD		mm	1,160(1,100 without legs) x 880 x 550	1,160(1,100 without legs) x 880 x 550
		in.	45-11/16(43-5/16 without legs) x 34-11/16 x 21-11/16	45-11/16(43-5/16 without legs) x 34-11/16 x 21-11/16
Protection devices	High pressure protection		High pressure sensor, High pressure switch at 4.15MPa (601 psi)	High pressure sensor, High pressure switch at 4.15MPa (601 psi)
	Inverter circuit (COMP.)		Over-heat protection, Over-current protection	Over-heat protection, Over-current protection
	Compressor		Over-heat protection	Over-heat protection
Refrigerant	Type x original charge		R410A x 5.0kg (12lbs)	R410A x 5.0kg (12lbs)
	Control		Indoor LEV and BC controller	
Net weight		kg (lbs)	195(430)	195(430)
Heat exchanger			plate type	plate type
	Water volume in plate	l	5.0	5.0
	Water pressure Max.	MPa	1.0	1.0
HIC circuit (HIC: Heat Inter-Changer)			-	-
Pipe between unit and disrributor	Liquid pipe	mm (in.)	9.52(3/8) Brazed	9.52(3/8) Brazed
	Gas pipe	mm (in.)	19.05(3/4) Brazed	19.05(3/4) Brazed
Drawing	External		KB94T223	
	Wiring		KE94C317	KE94C317
Standard attachment	Document		Installation Manual	
	Accessory		Refrigerant conn. pipe	
Optional parts			Heat Source Twinning kit: CMY-Y100VBK2 Joint: CMY-Y102S-G2, CMY-Y102L-G2, CMY-Y202-G2 Header: CMY-Y104/108/1010-G	
Remarks	●.Details on foundation work, duct work, insulation work, electrical wiring, power source switch, and other items shall be referred to the Installation Manual. ●.Due to continuing improvement, above specifications may be subject to change without notice. ●.The ambient temperature of the heat source unit needs to be kept below 40°C D.B. ●.The ambient relative humidity of the heat source unit needs to be kept below 80%. ●.The heat source Unit should not be installed at outdoor. ●.Be sure to mount a strainer (more than 50 meshes) at the water inlet piping of the unit. ●.Be sure to provide interlocking for the unit operation and water circuit.			

Notes :

1.Nominal cooling conditions(subject to JIS B8615-1)
Indoor:27°CDB/19°CWB(81°FDB/66°FWB), Water temperature:30°C(86°F)
Pipe length:7.5m(24-9/16ft.), Level difference:0m(0ft.)

2.Nominal heating conditions(subject to JIS B8615-1)
Indoor:20°CDB(68°FDB), Water temperature:20°C(68°F)
Pipe length:7.5m(24-9/16ft.), Level difference:0m(0ft.)

Unit converter	
kcal	=kW x 860
BTU/h	=kW x 3,412
cfm	=m^3/min x 35.31
lbs	=kg / 0.4536

*The specification data is subject to rounding variation.

Model			PQHY-P450YSHM-A
Power source			3-phase 4-wire 380-400-415V 50/60Hz
Cooling capacity (Nominal)	*1	kW	50.0
	*1	kcal / h	43,000
	*1	BTU / h	170,600
	Power input	kW	9.84
	Current input	A	16.6-15.7-15.2
	COP	kW / kW	5.08
Temp. range of cooling	Indoor	W.B.	15.0 ~ 24.0°C(59 ~ 75°F)
	Circulating water	°C	10.0 ~ 45.0°C(50 ~ 113°F)
Heating capacity (Nominal)	*2	kW	56.0
	*2	kcal / h	48,200
	*2	BTU / h	191,100
	Power input	kW	10.42
	Current input	A	17.5-16.7-16.1
	COP	kW / kW	5.37
Temp. range of heating	Indoor	D.B.	15.0 ~ 27.0°C(59 ~ 81°F)
	Circulating water	°C	10.0 ~ 45.0°C(50 ~ 113°F)
Indoor unit connectable	Total capacity		50 ~ 130 % of heat source unit capacity
	Model / Quantity		P15 ~ P250 / 1 ~ 39
Sound pressure level (measured in anechoic room)		dB <A>	51
Refrigerant piping diameter	Liquid pipe	mm (in.)	15.88(5/8) Brazed
	Gas pipe	mm (in.)	28.58(1-1/8) Brazed

Set Model

Model			PQHY-P250YHM-A	PQHY-P200YHM-A
Circulating water	Water flow rate	m^3 / h	5.76 + 5.76	
		L / min	96 + 96	
		cfm	3.4 + 3.4	
	Pressure drop	kPa	17	17
	Operating volume range	m^3 / h	4.5 + 4.5 ~ 7.2 + 7.2	
Compressor	Type x Quantity		Inverter scroll hermetic compressor	Inverter scroll hermetic compressor
	Manufacture		AC&R Works, MITSUBISHI ELECTRIC CORPORATION	AC&R Works, MITSUBISHI ELECTRIC CORPORATION
	Starting method		Inverter	Inverter
	Motor output	kW	6.3	4.6
	Case heater	kW	0.035(240 V)	0.035(240 V)
	Lubricant		MEL32	MEL32
External finish			Acrylic painted steel plate	Acrylic painted steel plate
External dimension HxWxD		mm	1,160(1,100 without legs) x 880 x 550	1,160(1,100 without legs) x 880 x 550
		in.	45-11/16(43-5/16 without legs) x 34-11/16 x 21-11/16	45-11/16(43-5/16 without legs) x 34-11/16 x 21-11/16
Protection devices	High pressure protection		High pressure sensor, High pressure switch at 4.15MPa (601 psi)	High pressure sensor, High pressure switch at 4.15MPa (601 psi)
	Inverter circuit (COMP.)		Over-heat protection, Over-current protection	Over-heat protection, Over-current protection
	Compressor		Over-heat protection	Over-heat protection
Refrigerant	Type x original charge		R410A x 5.0kg (12lbs)	R410A x 5.0kg (12lbs)
	Control		Indoor LEV and BC controller	
Net weight		kg (lbs)	195(430)	195(430)
Heat exchanger			plate type	plate type
	Water volume in plate	l	5.0	5.0
	Water pressure Max.	MPa	1.0	1.0
HIC circuit (HIC: Heat Inter-Changer)			-	-
Pipe between unit and disrributor	Liquid pipe	mm (in.)	9.52(3/8) Brazed	9.52(3/8) Brazed
	Gas pipe	mm (in.)	22.2(7/8) Brazed	22.2(7/8) Brazed
Drawing	External		KB94T223	
	Wiring		KE94C317	KE94C317
Standard attachment	Document		Installation Manual	
	Accessory		Refrigerant conn. pipe	
Optional parts			Heat Source Twinning kit: CMY-Y100VBK2 Joint: CMY-Y102S-G2, CMY-Y102L-G2, CMY-Y202-G2 Header: CMY-Y104/108/1010-G	
Remarks	●.Details on foundation work, duct work, insulation work, electrical wiring, power source switch, and other items shall be referred to the Installation Manual. ●.Due to continuing improvement, above specifications may be subject to change without notice. ●.The ambient temperature of the heat source unit needs to be kept below 40°C D.B. ●.The ambient relative humidity of the heat source unit needs to be kept below 80%. ●.The heat source Unit should not be installed at outdoor. ●.Be sure to mount a strainer (more than 50 meshes) at the water inlet piping of the unit. ●.Be sure to provide interlocking for the unit operation and water circuit.			

Notes :

1.Nominal cooling conditions(subject to JIS B8615-1)
Indoor:27°CDB/19°CWB(81°FDB/66°FWB), Water temperature:30°C(86°F)
Pipe length:7.5m(24-9/16ft.), Level difference:0m(0ft.)

2.Nominal heating conditions(subject to JIS B8615-1)
Indoor:20°CDB(68°FDB), Water temperature:20°C(68°F)
Pipe length:7.5m(24-9/16ft.), Level difference:0m(0ft.)

Unit converter	
kcal	=kW x 860
BTU/h	=kW x 3,412
cfm	=m^3/min x 35.31
lbs	=kg / 0.4536

*The specification data is subject to rounding variation.

WY

1. SPECIFICATIONS

Model			PQHY-P500YSHM-A
Power source			3-phase 4-wire 380-400-415V 50/60Hz
Cooling capacity (Nominal)	*1	kW	56.0
	*1	kcal / h	48,200
	*1	BTU / h	191,100
	Power input	kW	11.45
	Current input	A	19.3-18.3-17.6
	COP	kW / kW	4.89
Temp. range of cooling	Indoor	W.B.	15.0 ~ 24.0°C(59 ~ 75°F)
	Circulating water	°C	10.0 ~ 45.0°C(50 ~ 113°F)
Heating capacity (Nominal)	*2	kW	63.0
	*2	kcal / h	54,200
	*2	BTU / h	215,000
	Power input	kW	12.06
	Current input	A	20.3-19.3-18.6
	COP	kW / kW	5.22
Temp. range of heating	Indoor	D.B.	15.0 ~ 27.0°C(59 ~ 81°F)
	Circulating water	°C	10.0 ~ 45.0°C(50 ~ 113°F)
Indoor unit connectable	Total capacity		50 ~ 130 % of heat source unit capacity
	Model / Quantity		P15 ~ P250 / 1 ~ 43
Sound pressure level (measured in anechoic room)		dB <A>	52
Refrigerant piping diameter	Liquid pipe	mm (in.)	15.88(5/8) Brazed
	Gas pipe	mm (in.)	28.58(1-1/8) Brazed

Set Model

Model			PQHY-P250YHM-A	PQHY-P250YHM-A
Circulating water	Water flow rate	m^3 / h	5.76 + 5.76	
		L / min	96 + 96	
		cfm	3.4 + 3.4	
	Pressure drop	kPa	17	17
	Operating volume range	m^3 / h	4.5 + 4.5 ~ 7.2 + 7.2	
Compressor	Type x Quantity		Inverter scroll hermetic compressor	Inverter scroll hermetic compressor
	Manufacture		AC&R Works, MITSUBISHI ELECTRIC CORPORATION	AC&R Works, MITSUBISHI ELECTRIC CORPORATION
	Starting method		Inverter	Inverter
	Motor output	kW	6.3	6.3
	Case heater	kW	0.035(240 V)	0.035(240 V)
	Lubricant		MEL32	MEL32
External finish			Acrylic painted steel plate	Acrylic painted steel plate
External dimension HxWxD		mm	1,160(1,100 without legs) x 880 x 550	1,160(1,100 without legs) x 880 x 550
		in.	45-11/16(43-5/16 without legs) x 34-11/16 x 21-11/16	45-11/16(43-5/16 without legs) x 34-11/16 x 21-11/16
Protection devices	High pressure protection		High pressure sensor, High pressure switch at 4.15MPa (601 psi)	High pressure sensor, High pressure switch at 4.15MPa (601 psi)
	Inverter circuit (COMP.)		Over-heat protection, Over-current protection	Over-heat protection, Over-current protection
	Compressor		Over-heat protection	Over-heat protection
Refrigerant	Type x original charge		R410A x 5.0kg (12lbs)	R410A x 5.0kg (12lbs)
	Control		Indoor LEV and BC controller	
Net weight		kg (lbs)	195(430)	195(430)
Heat exchanger			plate type	plate type
	Water volume in plate	l	5.0	5.0
	Water pressure Max.	MPa	1.0	1.0
HIC circuit (HIC: Heat Inter-Changer)			-	-
Pipe between unit and disrributor	Liquid pipe	mm (in.)	9.52(3/8) Brazed	9.52(3/8) Brazed
	Gas pipe	mm (in.)	22.2(7/8) Brazed	22.2(7/8) Brazed
Drawing	External		KB94T223	
	Wiring		KE94C317	KE94C317
Standard attachment	Document		Installation Manual	
	Accessory		Refrigerant conn. pipe	
Optional parts			Heat Source Twinning kit: CMY-Y100VBK2 Joint: CMY-Y102S-G2, CMY-Y102L-G2, CMY-Y202-G2 Header: CMY-Y104/108/1010-G	
Remarks	●.Details on foundation work, duct work, insulation work, electrical wiring, power source switch, and other items shall be referred to the Installation Manual. ●.Due to continuing improvement, above specifications may be subject to change without notice. ●.The ambient temperature of the heat source unit needs to be kept below 40°C D.B. ●.The ambient relative humidity of the heat source unit needs to be kept below 80%. ●.The heat source Unit should not be installed at outdoor. ●.Be sure to mount a strainer (more than 50 meshes) at the water inlet piping of the unit. ●.Be sure to provide interlocking for the unit operation and water circuit.			

Notes :

1.Nominal cooling conditions(subject to JIS B8615-1)
Indoor:27°CDB/19°CWB(81°FDB/66°FWB), Water temperature:30°C(86°F)
Pipe length:7.5m(24-9/16ft.), Level difference:0m(0ft.)

2.Nominal heating conditions(subject to JIS B8615-1)
Indoor:20°CDB(68°FDB), Water temperature:20°C(68°F)
Pipe length:7.5m(24-9/16ft.), Level difference:0m(0ft.)

Unit converter	
kcal	=kW x 860
BTU/h	=kW x 3,412
cfm	=m^3/min x 35.31
lbs	=kg / 0.4536

*The specification data is subject to rounding variation.

Model			PQHY-P550YSHM-A
Power source			3-phase 4-wire 380-400-415V 50/60Hz
Cooling capacity (Nominal)	*1	kW	63.0
	*1	kcal / h	54,200
	*1	BTU / h	215,000
	Power input	kW	13.46
	Current input	A	22.7-21.5-20.8
	COP	kW / kW	4.68
Temp. range of cooling	Indoor	W.B.	15.0 ~ 24.0°C(59 ~ 75°F)
	Circulating water	°C	10.0 ~ 45.0°C(50 ~ 113°F)
Heating capacity (Nominal)	*2	kW	69.0
	*2	kcal / h	59,300
	*2	BTU / h	235,400
	Power input	kW	14.65
	Current input	A	24.7-23.4-22.6
	COP	kW / kW	4.70
Temp. range of heating	Indoor	D.B.	15.0 ~ 27.0°C(59 ~ 81°F)
	Circulating water	°C	10.0 ~ 45.0°C(50 ~ 113°F)
Indoor unit connectable	Total capacity		50 ~ 130 % of heat source unit capacity
	Model / Quantity		P15 ~ P250 / 2 ~ 47
Sound pressure level (measured in anechoic room)		dB <A>	52.5
Refrigerant piping diameter	Liquid pipe	mm (in.)	15.88(5/8) Brazed
	Gas pipe	mm (in.)	28.58(1-1/8) Brazed

Set Model

Model			PQHY-P300YHM-A	PQHY-P250YHM-A
Circulating water	Water flow rate	m^3 / h	5.76 + 5.76	
		L / min	96 + 96	
		cfm	3.4 + 3.4	
	Pressure drop	kPa	17	17
	Operating volume range	m^3 / h	4.5 + 4.5 ~ 7.2 + 7.2	
Compressor	Type x Quantity		Inverter scroll hermetic compressor	Inverter scroll hermetic compressor
	Manufacture		AC&R Works, MITSUBISHI ELECTRIC CORPORATION	AC&R Works, MITSUBISHI ELECTRIC CORPORATION
	Starting method		Inverter	Inverter
	Mo~r output	kW	7.4	6.3
	Case heater	kW	0.035(240 V)	0.035(240 V)
	Lubricant		MEL32	MEL32
External finish			Acrylic painted steel plate	Acrylic painted steel plate
External dimension HxWxD		mm	1,160(1,100 without legs) x 880 x 550	1,160(1,100 without legs) x 880 x 550
		in.	45-11/16(43-5/16 without legs) x 34-11/16 x 21-11/16	45-11/16(43-5/16 without legs) x 34-11/16 x 21-11/16
Protection devices	High pressure protection		High pressure sensor, High pressure switch at 4.15MPa (601 psi)	High pressure sensor, High pressure switch at 4.15MPa (601 psi)
	Inverter circuit (COMP.)		Over-heat protection, Over-current protection	Over-heat protection, Over-current protection
	Compressor		Over-heat protection	Over-heat protection
Refrigerant	Type x original charge		R410A x 5.0kg (12lbs)	R410A x 5.0kg (12lbs)
	Control		Indoor LEV and BC controller	
Net weight		kg (lbs)	195(430)	195(430)
Heat exchanger			plate type	plate type
	Water volume in plate	l	5.0	5.0
	Water pressure Max.	MPa	1.0	1.0
HIC circuit (HIC: Heat Inter-Changer)			-	-
Pipe between unit and disrribu~r	Liquid pipe	mm (in.)	12.7(1/2) Brazed	12.7(1/2) Brazed
	Gas pipe	mm (in.)	22.2(7/8) Brazed	22.2(7/8) Brazed
Drawing	External		KB94T223	
	Wiring		KE94C317	KE94C317
Standard attachment	Document		Installation Manual	
	Accessory		Refrigerant conn. pipe	
Optional parts			Heat Source Twinning kit: CMY-Y100VBK2 Joint: CMY-Y102S-G2, CMY-Y102L-G2, CMY-Y202-G2,CMY-Y302-G2 Header: CMY-Y104/108/1010-G	
Remarks	●.Details on foundation work, duct work, insulation work, electrical wiring, power source switch, and other items shall be referred to the Installation Manual. ●.Due to continuing improvement, above specifications may be subject to change without notice. ●.The ambient temperature of the heat source unit needs to be kept below 40°C D.B. ●.The ambient relative humidity of the heat source unit needs to be kept below 80%. ●.The heat source Unit should not be installed at outdoor. ●.Be sure to mount a strainer (more than 50 meshes) at the water inlet piping of the unit. ●.Be sure to provide interlocking for the unit operation and water circuit.			

Notes :

1.Nominal cooling conditions(subject to JIS B8615-1)
Indoor:27°CDB/19°CWB(81°FDB/66°FWB), Water temperature:30°C(86°F)
Pipe length:7.5m(24-9/16ft.), Level difference:0m(0ft.)

2.Nominal heating conditions(subject to JIS B8615-1)
Indoor:20°CDB(68°FDB), Water temperature:20°C(68°F)
Pipe length:7.5m(24-9/16ft.), Level difference:0m(0ft.)

Unit converter

kcal	=kW x 860
BTU/h	=kW x 3,412
cfm	=m^3/min x 35.31
lbs	=kg / 0.4536

*The specification data is subject to rounding variation.

WY

1. SPECIFICATIONS

Model			PQHY-P600YSHM-A
Power source			3-phase 4-wire 380-400-415V 50/60Hz
Cooling capacity (Nominal)	*1	kW	69.0
	*1	kcal / h	59,300
	*1	BTU / h	235,400
	Power input	kW	15.48
	Current input	A	26.1-24.8-23.9
	COP	kW / kW	4.45
Temp. range of cooling	Indoor	W.B.	15.0 ~ 24.0°C(59 ~ 75°F)
	Circulating water	°C	10.0 ~ 45.0°C(50 ~ 113°F)
Heating capacity (Nominal)	*2	kW	76.5
	*2	kcal / h	65,800
	*2	BTU / h	261,000
	Power input	kW	17.12
	Current input	A	28.9-27.4-26.4
	COP	kW / kW	4.46
Temp. range of heating	Indoor	D.B.	15.0 ~ 27.0°C(59 ~ 81°F)
	Circulating water	°C	10.0 ~ 45.0°C(50 ~ 113°F)
Indoor unit connectable	Total capacity		50 ~ 130 % of heat source unit capacity
	Model / Quantity		P15 ~ P250 / 2 ~ 50
Sound pressure level (measured in anechoic room)		dB <A>	53
Refrigerant piping diameter	Liquid pipe	mm (in.)	15.88(5/8) Brazed
	Gas pipe	mm (in.)	28.58(1-1/8) Brazed

Set Model

Model			PQHY-P300YHM-A	PQHY-P300YHM-A
Circulating water	Water flow rate	m^3 / h	5.76 + 5.76	
		L / min	96 + 96	
		cfm	3.4 + 3.4	
	Pressure drop	kPa	17	17
	Operating volume range	m^3 / h	4.5 + 4.5 ~ 7.2 + 7.2	
Compressor	Type x Quantity		Inverter scroll hermetic compressor	Inverter scroll hermetic compressor
	Manufacture		AC&R Works, MITSUBISHI ELECTRIC CORPORATION	AC&R Works, MITSUBISHI ELECTRIC CORPORATION
	Starting method		Inverter	Inverter
	Motor output	kW	7.4	7.4
	Case heater	kW	0.035(240 V)	0.035(240 V)
	Lubricant		MEL32	MEL32
External finish			Acrylic painted steel plate	Acrylic painted steel plate
External dimension HxWxD		mm	1,160(1,100 without legs) x 880 x 550	1,160(1,100 without legs) x 880 x 550
		in.	45-11/16(43-5/16 without legs) x 34-11/16 x 21-11/16	45-11/16(43-5/16 without legs) x 34-11/16 x 21-11/16
Protection devices	High pressure protection		High pressure sensor, High pressure switch at 4.15MPa (601 psi)	High pressure sensor, High pressure switch at 4.15MPa (601 psi)
	Inverter circuit (COMP.)		Over-heat protection, Over-current protection	Over-heat protection, Over-current protection
	Compressor		Over-heat protection	Over-heat protection
Refrigerant	Type x original charge		R410A x 5.0kg (12lbs)	R410A x 5.0kg (12lbs)
	Control		Indoor LEV and BC controller	
Net weight		kg (lbs)	195(430)	195(430)
Heat exchanger			plate type	plate type
	Water volume in plate	l	5.0	5.0
	Water pressure Max.	MPa	1.0	1.0
HIC circuit (HIC: Heat Inter-Changer)			-	-
Pipe between unit and disrributor	Liquid pipe	mm (in.)	12.7(1/2) Brazed	12.7(1/2) Brazed
	Gas pipe	mm (in.)	22.2(7/8) Brazed	22.2(7/8) Brazed
Drawing	External		KB94T223	
	Wiring		KE94C317	KE94C317
Standard attachment	Document		Installation Manual	
	Accessory		Refrigerant conn. pipe	
Optional parts			Heat Source Twinning kit: CMY-Y100VBK2 Joint: CMY-Y102S-G2, CMY-Y102L-G2, CMY-Y202-G2,CMY-Y302-G2 Header: CMY-Y104/108/1010-G	
Remarks	●.Details on foundation work, duct work, insulation work, electrical wiring, power source switch, and other items shall be referred to the Installation Manual. ●.Due to continuing improvement, above specifications may be subject to change without notice. ●.The ambient temperature of the heat source unit needs to be kept below 40°C D.B. ●.The ambient relative humidity of the heat source unit needs to be kept below 80%. ●.The heat source Unit should not be installed at outdoor. ●.Be sure to mount a strainer (more than 50 meshes) at the water inlet piping of the unit. ●.Be sure to provide interlocking for the unit operation and water circuit.			

Notes :

1.Nominal cooling conditions(subject to JIS B8615-1)
Indoor:27°CDB/19°CWB(81°FDB/66°FWB), Water temperature:30°C(86°F)
Pipe length:7.5m(24-9/16ft.), Level difference:0m(0ft.)

2.Nominal heating conditions(subject to JIS B8615-1)
Indoor:20°CDB(68°FDB), Water temperature:20°C(68°F)
Pipe length:7.5m(24-9/16ft.), Level difference:0m(0ft.)

Unit converter	
kcal	=kW x 860
BTU/h	=kW x 3,412
cfm	=m^3/min x 35.31
lbs	=kg / 0.4536

*The specification data is subject to rounding variation.

Model			PQHY-P650YSHM-A
Power source			3-phase 4-wire 380-400-415V 50/60Hz
Cooling capacity (Nominal)	*1	kW	73.0
	*1	kcal / h	62,800
	*1	BTU / h	249,100
	Power input	kW	13.96
	Current input	A	23.5-22.3-21.5
	COP	kW / kW	5.22
Temp. range of cooling	Indoor	W.B.	15.0 ~ 24.0°C(59 ~ 75°F)
	Circulating water	°C	10.0 ~ 45.0°C(50 ~ 113°F)
Heating capacity (Nominal)	*2	kW	81.5
	*2	kcal / h	70,100
	*2	BTU / h	278,100
	Power input	kW	14.74
	Current input	A	24.8-23.6-22.7
	COP	kW / kW	5.52
Temp. range of heating	Indoor	D.B.	15.0 ~ 27.0°C(59 ~ 81°F)
	Circulating water	°C	10.0 ~ 45.0°C(50 ~ 113°F)
Indoor unit connectable	Total capacity		50 ~ 130 % of heat source unit capacity
	Model / Quantity		P15 ~ P250 / 2 ~ 50
Sound pressure level (measured in anechoic room)		dB <A>	53
Refrigerant piping diameter	Liquid pipe	mm (in.)	19.05(3/4) Brazed
	Gas pipe	mm (in.)	34.93(1-3/8) Brazed

Set Model

Model			PQHY-P250YHM-A	PQHY-P200YHM-A	PQHY-P200YHM-A
Circulating water	Water flow rate	m^3 / h	5.76 + 5.76 + 5.76		
		L / min	96 + 96 + 96		
		cfm	3.4 + 3.4 + 3.4		
	Pressure drop	kPa	17	17	17
	Operating volume range	m^3 / h	4.5 + 4.5 + 4.5 ~ 7.2 + 7.2 + 7.2		
Compressor	Type x Quantity		Inverter scroll hermetic compressor	Inverter scroll hermetic compressor	Inverter scroll hermetic compressor
	Manufacture		AC&R Works, MITSUBISHI ELECTRIC CORPORATION	AC&R Works, MITSUBISHI ELECTRIC CORPORATION	AC&R Works, MITSUBISHI ELECTRIC CORPORATION
	Starting method		Inverter	Inverter	Inverter
	Motor output	kW	6.3	4.6	4.6
	Case heater	kW	0.035(240 V)	0.035(240 V)	0.035(240 V)
	Lubricant		MEL32	MEL32	MEL32
External finish			Acrylic painted steel plate	Acrylic painted steel plate	Acrylic painted steel plate
External dimension HxWxD		mm	1,160(1,100 without legs) x 880 x 550	1,160(1,100 without legs) x 880 x 550	1,160(1,100 without legs) x 880 x 550
		in.	45-11/16(43-5/16 without legs) x 34-11/16 x 21-11/16	45-11/16(43-5/16 without legs) x 34-11/16 x 21-11/16	45-11/16(43-5/16 without legs) x 34-11/16 x 21-11/16
Protection devices	High pressure protection		High pressure sensor, High pressure switch at 4.15MPa (601 psi)	High pressure sensor, High pressure switch at 4.15MPa (601 psi)	High pressure sensor, High pressure switch at 4.15MPa (601 psi)
	Inverter circuit (COMP.)		Over-heat protection, Over-current protection	Over-heat protection, Over-current protection	Over-heat protection, Over-current protection
	Compressor		Over-heat protection	Over-heat protection	Over-heat protection
Refrigerant	Type x original charge		R410A x 5.0kg (12lbs)	R410A x 5.0kg (12lbs)	R410A x 5.0kg (12lbs)
	Control		LEV and HIC circuit		
Net weight		kg (lbs)	195(430)	195(430)	195(430)
Heat exchanger			plate type	plate type	plate type
	Water volume in plate	l	5.0	5.0	5.0
	Water pressure Max.	MPa	1.0	1.0	1.0
HIC circuit (HIC: Heat Inter-Changer)			Copper pipe,tube-in-tube structure	Copper pipe,tube-in-tube structure	Copper pipe,tube-in-tube structure
Pipe between unit and distributor	Liquid pipe	mm (in.)	12.7(1/2) Brazed	12.7(1/2) Brazed	12.7(1/2) Brazed
	Gas pipe	mm (in.)	22.2(7/8) Brazed	19.05(3/4) Brazed	19.05(3/4) Brazed
Drawing	External		KB94T659		
	Wiring		KE94C317	KE94C317	KE94C317
Standard attachment	Document		Installation Manual		
	Accessory		Refrigerant conn. pipe		
Optional parts			Heat Source Twinning kit: CMY-Y300VBK2 Joint: CMY-Y102S-G2,CMY-Y102L-G2,CMY-Y202-G2,CMY-Y302-G2 Header: CMY-Y104/108/1010-G		
Remarks			* Details on foundation work, duct work, insulation work, electrical wiring, power source switch, and other items shall be referred to the Installation Manual. * Due to continuing improvement, above specifications may be subject to change without notice. * The ambient temperature of the heat source unit needs to be kept below 40°C D.B. * The ambient relative humidity of the heat source unit needs to be kept below 80%. * The heat source unit should not be installed at outdoor. * Be sure to mount a strainer (more than 50 meshes) at the water inlet piping of the unit. * Be sure to provide interlocking for the unit operation and water circuit.		

Notes :

1.Nominal cooling conditions(subject to JIS B8615-1)
Indoor:27°CDB/19°CWB(81°FDB/66°FWB), Water temperature:30°C(86°F)
Pipe length:7.5m(24-9/16ft.), Level difference:0m(0ft.)
2.Nominal heating conditions(subject to JIS B8615-1)
Indoor:20°CDB(68°FDB), Water temperature:20°C(68°F)
Pipe length:7.5m(24-9/16ft.), Level difference:0m(0ft.)

Unit converter	
kcal	=kW x 860
BTU/h	=kW x 3,412
cfm	=m^3/min x 35.31
lb	=kg / 0.4536

*Above specification data is subject to rounding variation.

WY

1. SPECIFICATIONS

Model			PQHY-P700YSHM-A
Power source			3-phase 4-wire 380-400-415V 50/60Hz
Cooling capacity (Nominal)	*1	kW	80.0
	*1	kcal / h	68,800
	*1	BTU / h	273,000
	Power input	kW	15.58
	Current input	A	26.3-24.9-24.0
	COP	kW / kW	5.13
Temp. range of cooling	Indoor	W.B.	15.0 ~ 24.0°C(59 ~ 75°F)
	Circulating water	°C	10.0 ~ 45.0°C(50 ~ 113°F)
Heating capacity (Nominal)	*2	kW	88.0
	*2	kcal / h	75,700
	*2	BTU / h	300,300
	Power input	kW	16.51
	Current input	A	27.8-26.4-25.5
	COP	kW / kW	5.33
Temp. range of heating	Indoor	D.B.	15.0 ~ 27.0°C(59 ~ 81°F)
	Circulating water	°C	10.0 ~ 45.0°C(50 ~ 113°F)
Indoor unit connectable	Total capacity		50 ~ 130 % of heat source unit capacity
	Model / Quantity		P15 ~ P250 / 2 ~ 50
Sound pressure level (measured in anechoic room)		dB <A>	53.5
Refrigerant piping diameter	Liquid pipe	mm (in.)	19.05(3/4) Brazed
	Gas pipe	mm (in.)	34.93(1-3/8) Brazed

Set Model

Model			PQHY-P250YHM-A	PQHY-P250YHM-A	PQHY-P200YHM-A
Circulating water	Water flow rate	m^3 / h	5.76 + 5.76 + 5.76		
		L / min	96 + 96 + 96		
		cfm	3.4 + 3.4 + 3.4		
	Pressure drop	kPa	17	17	17
	Operating volume range	m^3 / h	4.5 + 4.5 + 4.5 ~ 7.2 + 7.2 + 7.2		
Compressor	Type x Quantity		Inverter scroll hermetic compressor	Inverter scroll hermetic compressor	Inverter scroll hermetic compressor
	Manufacture		AC&R Works, MITSUBISHI ELECTRIC CORPORATION	AC&R Works, MITSUBISHI ELECTRIC CORPORATION	AC&R Works, MITSUBISHI ELECTRIC CORPORATION
	Starting method		Inverter	Inverter	Inverter
	Motor output	kW	6.3	6.3	4.6
	Case heater	kW	0.035(240 V)	0.035(240 V)	0.035(240 V)
	Lubricant		MEL32	MEL32	MEL32
External finish			Acrylic painted steel plate	Acrylic painted steel plate	Acrylic painted steel plate
External dimension HxWxD		mm	1,160(1,100 without legs) x 880 x 550	1,160(1,100 without legs) x 880 x 550	1,160(1,100 without legs) x 880 x 550
		in.	45-11/16(43-5/16 without legs) x 34-11/16 x 21-11/16	45-11/16(43-5/16 without legs) x 34-11/16 x 21-11/16	45-11/16(43-5/16 without legs) x 34-11/16 x 21-11/16
Protection devices	High pressure protection		High pressure sensor, High pressure switch at 4.15MPa (601 psi)	High pressure sensor, High pressure switch at 4.15MPa (601 psi)	High pressure sensor, High pressure switch at 4.15MPa (601 psi)
	Inverter circuit (COMP.)		Over-heat protection, Over-current protection	Over-heat protection, Over-current protection	Over-heat protection, Over-current protection
	Compressor		Over-heat protection	Over-heat protection	Over-heat protection
Refrigerant	Type x original charge		R410A x 5.0kg (12lbs)	R410A x 5.0kg (12lbs)	R410A x 5.0kg (12lbs)
	Control		LEV and HIC circuit		
Net weight		kg (lbs)	195(430)	195(430)	195(430)
Heat exchanger			plate type	plate type	plate type
	Water volume in plate	l	5.0	5.0	5.0
	Water pressure Max.	MPa	1.0	1.0	1.0
HIC circuit (HIC: Heat Inter-Changer)			Copper pipe,tube-in-tube structure	Copper pipe,tube-in-tube structure	Copper pipe,tube-in-tube structure
Pipe between unit and distributor	Liquid pipe	mm (in.)	12.7(1/2) Brazed	12.7(1/2) Brazed	12.7(1/2) Brazed
	Gas pipe	mm (in.)	22.2(7/8) Brazed	22.2(7/8) Brazed	19.05(3/4) Brazed
Drawing	External		KB94T659		
	Wiring		KE94C317	KE94C317	KE94C317
Standard attachment	Document		Installation Manual		
	Accessory		Refrigerant conn. pipe		
Optional parts			Heat Source Twinning kit: CMY-Y300VBK2 Joint: CMY-Y102S-G2,CMY-Y102L-G2,CMY-Y202-G2,CMY-Y302-G2 Header: CMY-Y104/108/1010-G		
Remarks			* Details on foundation work, duct work, insulation work, electrical wiring, power source switch, and other items shall be referred to the Installation Manual. * Due to continuing improvement, above specifications may be subject to change without notice. * The ambient temperature of the heat source unit needs to be kept below 40°C D.B. * The ambient relative humidity of the heat source unit needs to be kept below 80%. * The heat source unit should not be installed at outdoor. * Be sure to mount a strainer (more than 50 meshes) at the water inlet piping of the unit. * Be sure to provide interlocking for the unit operation and water circuit.		

Notes :

1.Nominal cooling conditions(subject to JIS B8615-1)
Indoor:27°CDB/19°CWB(81°FDB/66°FWB), Water temperature:30°C(86°F)
Pipe length:7.5m(24-9/16ft.), Level difference:0m(0ft.)
2.Nominal heating conditions(subject to JIS B8615-1)
Indoor:20°CDB(68°FDB), Water temperature:20°C(68°F)
Pipe length:7.5m(24-9/16ft.), Level difference:0m(0ft.)

Unit converter	
kcal	=kW x 860
BTU/h	=kW x 3,412
cfm	=m^3/min x 35.31
lb	=kg / 0.4536

*Above specification data is subject to rounding variation.

1. SPECIFICATIONS

Model			PQHY-P750YSHM-A
Power source			3-phase 4-wire 380-400-415V 50/60Hz
Cooling capacity (Nominal)	*1	kW	85.0
	*1	kcal / h	73,100
	*1	BTU / h	290,000
	Power input	kW	17.19
	Current input	A	29.0-27.5-26.5
	COP	kW / kW	4.94
Temp. range of cooling	Indoor	W.B.	15.0 ~ 24.0°C(59 ~ 75°F)
	Circulating water	°C	10.0 ~ 45.0°C(50 ~ 113°F)
Heating capacity (Nominal)	*2	kW	95.0
	*2	kcal / h	81,700
	*2	BTU / h	324,100
	Power input	kW	18.27
	Current input	A	30.8-29.3-28.2
	COP	kW / kW	5.19
Temp. range of heating	Indoor	D.B.	15.0 ~ 27.0°C(59 ~ 81°F)
	Circulating water	°C	10.0 ~ 45.0°C(50 ~ 113°F)
Indoor unit connectable	Total capacity		50 ~ 130 % of heat source unit capacity
	Model / Quantity		P15 ~ P250 / 2 ~ 50
Sound pressure level (measured in anechoic room)		dB <A>	54
Refrigerant piping diameter	Liquid pipe	mm (in.)	19.05(3/4) Brazed
	Gas pipe	mm (in.)	34.93(1-3/8) Brazed

Set Model

Model			PQHY-P250YHM-A	PQHY-P250YHM-A	PQHY-P250YHM-A
Circulating water	Water flow rate	m^3 / h	5.76 + 5.76 + 5.76		
		L / min	96 + 96 + 96		
		cfm	3.4 + 3.4 + 3.4		
	Pressure drop	kPa	17	17	17
	Operating volume range	m^3 / h	4.5 + 4.5 + 4.5 ~ 7.2 + 7.2 + 7.2		
Compressor	Type x Quantity		Inverter scroll hermetic compressor	Inverter scroll hermetic compressor	Inverter scroll hermetic compressor
	Manufacture		AC&R Works, MITSUBISHI ELECTRIC CORPORATION	AC&R Works, MITSUBISHI ELECTRIC CORPORATION	AC&R Works, MITSUBISHI ELECTRIC CORPORATION
	Starting method		Inverter	Inverter	Inverter
	Motor output	kW	6.3	6.3	6.3
	Case heater	kW	0.035(240 V)	0.035(240 V)	0.035(240 V)
	Lubricant		MEL32	MEL32	MEL32
External finish			Acrylic painted steel plate	Acrylic painted steel plate	Acrylic painted steel plate
External dimension HxWxD		mm	1,160(1,100 without legs) x 880 x 550	1,160(1,100 without legs) x 880 x 550	1,160(1,100 without legs) x 880 x 550
		in.	45-11/16(43-5/16 without legs) x 34-11/16 x 21-11/16	45-11/16(43-5/16 without legs) x 34-11/16 x 21-11/16	45-11/16(43-5/16 without legs) x 34-11/16 x 21-11/16
Protection devices	High pressure protection		High pressure sensor, High pressure switch at 4.15MPa (601 psi)	High pressure sensor, High pressure switch at 4.15MPa (601 psi)	High pressure sensor, High pressure switch at 4.15MPa (601 psi)
	Inverter circuit (COMP.)		Over-heat protection, Over-current protection	Over-heat protection, Over-current protection	Over-heat protection, Over-current protection
	Compressor		Over-heat protection	Over-heat protection	Over-heat protection
Refrigerant	Type x original charge		R410A x 5.0kg (12lbs)	R410A x 5.0kg (12lbs)	R410A x 5.0kg (12lbs)
	Control		LEV and HIC circuit		
Net weight		kg (lbs)	195(430)	195(430)	195(430)
Heat exchanger			plate type	plate type	plate type
	Water volume in plate	l	5.0	5.0	5.0
	Water pressure Max.	MPa	1.0	1.0	1.0
HIC circuit (HIC: Heat Inter-Changer)			Copper pipe,tube-in-tube structure	Copper pipe,tube-in-tube structure	Copper pipe,tube-in-tube structure
Pipe between unit and distributor	Liquid pipe	mm (in.)	12.7(1/2) Brazed	12.7(1/2) Brazed	12.7(1/2) Brazed
	Gas pipe	mm (in.)	22.2(7/8) Brazed	22.2(7/8) Brazed	22.2(7/8) Brazed
Drawing	External		KB94T659		
	Wiring		KE94C317	KE94C317	KE94C317
Standard attachment	Document		Installation Manual		
	Accessory		Refrigerant conn. pipe		
Optional parts			Heat Source Twinning kit: CMY-Y300VBK2 Joint: CMY-Y102S-G2,CMY-Y102L-G2,CMY-Y202-G2,CMY-Y302-G2 Header: CMY-Y104/108/1010-G		
Remarks			* Details on foundation work, duct work, insulation work, electrical wiring, power source switch, and other items shall be referred to the Installation Manual. * Due to continuing improvement, above specifications may be subject to change without notice. * The ambient temperature of the heat source unit needs to be kept below 40°C D.B. * The ambient relative humidity of the heat source unit needs to be kept below 80%. * The heat source unit should not be installed at outdoor. * Be sure to mount a strainer (more than 50 meshes) at the water inlet piping of the unit. * Be sure to provide interlocking for the unit operation and water circuit.		

Notes :

1.Nominal cooling conditions(subject to JIS B8615-1)
Indoor:27°CDB/19°CWB(81°FDB/66°FWB), Water temperature:30°C(86°F)
Pipe length:7.5m(24-9/16ft.), Level difference:0m(0ft.)
2.Nominal heating conditions(subject to JIS B8615-1)
Indoor:20°CDB(68°FDB), Water temperature:20°C(68°F)
Pipe length:7.5m(24-9/16ft.), Level difference:0m(0ft.)

Unit converter	
kcal	=kW x 860
BTU/h	=kW x 3,412
cfm	=m^3/min x 35.31
lb	=kg / 0.4536

*Above specification data is subject to rounding variation.

WY

1. SPECIFICATIONS

Model			PQHY-P800YSHM-A
Power source			3-phase 4-wire 380-400-415V 50/60Hz
Cooling capacity (Nominal)	*1	kW	90.0
	*1	kcal / h	77,400
	*1	BTU / h	307,100
	Power input	kW	19.18
	Current input	A	32.3-30.7-29.6
	COP	kW / kW	4.69
Temp. range of cooling	Indoor	W.B.	15.0 ~ 24.0°C(59 ~ 75°F)
	Circulating water	°C	10.0 ~ 45.0°C(50 ~ 113°F)
Heating capacity (Nominal)	*2	kW	100.0
	*2	kcal / h	86,000
	*2	BTU / h	341,200
	Power input	kW	20.74
	Current input	A	35.0-33.2-32.0
	COP	kW / kW	4.82
Temp. range of heating	Indoor	D.B.	15.0 ~ 27.0°C(59 ~ 81°F)
	Circulating water	°C	10.0 ~ 45.0°C(50 ~ 113°F)
Indoor unit connectable	Total capacity		50 ~ 130 % of heat source unit capacity
	Model / Quantity		P15 ~ P250 / 2 ~ 50
Sound pressure level (measured in anechoic room)		dB <A>	54
Refrigerant piping diameter	Liquid pipe	mm (in.)	19.05(3/4) Brazed
	Gas pipe	mm (in.)	34.93(1-3/8) Brazed

Set Model

Model			PQHY-P300YHM-A	PQHY-P250YHM-A	PQHY-P250YHM-A
Circulating water	Water flow rate	m^3 / h	5.76 + 5.76 + 5.76		
		L / min	96 + 96 + 96		
		cfm	3.4 + 3.4 + 3.4		
	Pressure drop	kPa	17	17	17
	Operating volume range	m^3 / h	4.5 + 4.5 + 4.5 ~ 7.2 + 7.2 + 7.2		
Compressor	Type x Quantity		Inverter scroll hermetic compressor	Inverter scroll hermetic compressor	Inverter scroll hermetic compressor
	Manufacture		AC&R Works, MITSUBISHI ELECTRIC CORPORATION	AC&R Works, MITSUBISHI ELECTRIC CORPORATION	AC&R Works, MITSUBISHI ELECTRIC CORPORATION
	Starting method		Inverter	Inverter	Inverter
	Motor output	kW	7.4	6.3	6.3
	Case heater	kW	0.035(240 V)	0.035(240 V)	0.035(240 V)
	Lubricant		MEL32	MEL32	MEL32
External finish			Acrylic painted steel plate	Acrylic painted steel plate	Acrylic painted steel plate
External dimension HxWxD		mm	1,160(1,100 without legs) x 880 x 550	1,160(1,100 without legs) x 880 x 550	1,160(1,100 without legs) x 880 x 550
		in.	45-11/16(43-5/16 without legs) x 34-11/16 x 21-11/16	45-11/16(43-5/16 without legs) x 34-11/16 x 21-11/16	45-11/16(43-5/16 without legs) x 34-11/16 x 21-11/16
Protection devices	High pressure protection		High pressure sensor, High pressure switch at 4.15MPa (601 psi)	High pressure sensor, High pressure switch at 4.15MPa (601 psi)	High pressure sensor, High pressure switch at 4.15MPa (601 psi)
	Inverter circuit (COMP.)		Over-heat protection, Over-current protection	Over-heat protection, Over-current protection	Over-heat protection, Over-current protection
	Compressor		Over-heat protection	Over-heat protection	Over-heat protection
Refrigerant	Type x original charge		R410A x 5.0kg (12lbs)	R410A x 5.0kg (12lbs)	R410A x 5.0kg (12lbs)
	Control		LEV and HIC circuit		
Net weight		kg (lbs)	195(430)	195(430)	195(430)
Heat exchanger			plate type	plate type	plate type
	Water volume in plate	l	5.0	5.0	5.0
	Water pressure Max.	MPa	1.0	1.0	1.0
HIC circuit (HIC: Heat Inter-Changer)			Copper pipe,tube-in-tube structure	Copper pipe,tube-in-tube structure	Copper pipe,tube-in-tube structure
Pipe between unit and distributor	Liquid pipe	mm (in.)	12.7(1/2) Brazed	12.7(1/2) Brazed	12.7(1/2) Brazed
	Gas pipe	mm (in.)	22.2(7/8) Brazed	22.2(7/8) Brazed	22.2(7/8) Brazed
Drawing	External		KB94T659		
	Wiring		KE94C317	KE94C317	KE94C317
Standard attachment	Document		Installation Manual		
	Accessory		Refrigerant conn. pipe		
Optional parts			Heat Source Twinning kit: CMY-Y300VBK2 Joint: CMY-Y102S-G2,CMY-Y102L-G2,CMY-Y202-G2,CMY-Y302-G2 Header: CMY-Y104/108/1010-G		
Remarks			* Details on foundation work, duct work, insulation work, electrical wiring, power source switch, and other items shall be referred to the Installation Manual. * Due to continuing improvement, above specifications may be subject to change without notice. * The ambient temperature of the heat source unit needs to be kept below 40°C D.B. * The ambient relative humidity of the heat source unit needs to be kept below 80%. * The heat source unit should not be installed at outdoor. * Be sure to mount a strainer (more than 50 meshes) at the water inlet piping of the unit. * Be sure to provide interlocking for the unit operation and water circuit.		

Notes :

1.Nominal cooling conditions(subject to JIS B8615-1)
Indoor:27°CDB/19°CWB(81°FDB/66°FWB), Water temperature:30°C(86°F)
Pipe length:7.5m(24-9/16ft.), Level difference:0m(0ft.)
2.Nominal heating conditions(subject to JIS B8615-1)
Indoor:20°CDB(68°FDB), Water temperature:20°C(68°F)
Pipe length:7.5m(24-9/16ft.), Level difference:0m(0ft.)

Unit converter	
kcal	=kW x 860
BTU/h	=kW x 3,412
cfm	=m^3/min x 35.31
lb	=kg / 0.4536

*Above specification data is subject to rounding variation.

1. SPECIFICATIONS

Model			PQHY-P850YSHM-A
Power source			3-phase 4-wire 380-400-415V 50/60Hz
Cooling capacity (Nominal)	*1	kW	96.0
	*1	kcal / h	82,600
	*1	BTU / h	327,600
	Power input	kW	21.20
	Current input	A	35.7-33.9-32.7
	COP	kW / kW	4.52
Temp. range of cooling	Indoor	W.B.	15.0 ~ 24.0°C(59 ~ 75°F)
	Circulating water	°C	10.0 ~ 45.0°C(50 ~ 113°F)
Heating capacity (Nominal)	*2	kW	108.0
	*2	kcal / h	92,900
	*2	BTU / h	368,500
	Power input	kW	23.21
	Current input	A	39.1-37.2-35.8
	COP	kW / kW	4.65
Temp. range of heating	Indoor	D.B.	15.0 ~ 27.0°C(59 ~ 81°F)
	Circulating water	°C	10.0 ~ 45.0°C(50 ~ 113°F)
Indoor unit connectable	Total capacity		50 ~ 130 % of heat source unit capacity
	Model / Quantity		P15 ~ P250 / 2 ~ 50
Sound pressure level (measured in anechoic room)		dB <A>	54.5
Refrigerant piping diameter	Liquid pipe	mm (in.)	19.05(3/4) Brazed
	Gas pipe	mm (in.)	41.28(1-5/8) Brazed

Set Model

Model			PQHY-P300YHM-A	PQHY-P300YHM-A	PQHY-P250YHM-A
Circulating water	Water flow rate	m^3 / h	5.76 + 5.76 + 5.76		
		L / min	96 + 96 + 96		
		cfm	3.4 + 3.4 + 3.4		
	Pressure drop	kPa	17	17	17
	Operating volume range	m^3 / h	4.5 + 4.5 + 4.5 ~ 7.2 + 7.2 + 7.2		
Compressor	Type x Quantity		Inverter scroll hermetic compressor	Inverter scroll hermetic compressor	Inverter scroll hermetic compressor
	Manufacture		AC&R Works, MITSUBISHI ELECTRIC CORPORATION	AC&R Works, MITSUBISHI ELECTRIC CORPORATION	AC&R Works, MITSUBISHI ELECTRIC CORPORATION
	Starting method		Inverter	Inverter	Inverter
	Motor output	kW	7.4	7.4	6.3
	Case heater	kW	0.035(240 V)	0.035(240 V)	0.035(240 V)
	Lubricant		MEL32	MEL32	MEL32
External finish			Acrylic painted steel plate	Acrylic painted steel plate	Acrylic painted steel plate
External dimension HxWxD		mm	1,160(1,100 without legs) x 880 x 550	1,160(1,100 without legs) x 880 x 550	1,160(1,100 without legs) x 880 x 550
		in.	45-11/16(43-5/16 without legs) x 34-11/16 x 21-11/16	45-11/16(43-5/16 without legs) x 34-11/16 x 21-11/16	45-11/16(43-5/16 without legs) x 34-11/16 x 21-11/16
Protection devices	High pressure protection		High pressure sensor, High pressure switch at 4.15MPa (601 psi)	High pressure sensor, High pressure switch at 4.15MPa (601 psi)	High pressure sensor, High pressure switch at 4.15MPa (601 psi)
	Inverter circuit (COMP.)		Over-heat protection, Over-current protection	Over-heat protection, Over-current protection	Over-heat protection, Over-current protection
	Compressor		Over-heat protection	Over-heat protection	Over-heat protection
Refrigerant	Type x original charge		R410A x 5.0kg (12lbs)	R410A x 5.0kg (12lbs)	R410A x 5.0kg (12lbs)
	Control		LEV and HIC circuit		
Net weight		kg (lbs)	195(430)	195(430)	195(430)
Heat exchanger			plate type	plate type	plate type
	Water volume in plate	l	5.0	5.0	5.0
	Water pressure Max.	MPa	1.0	1.0	1.0
HIC circuit (HIC: Heat Inter-Changer)			Copper pipe,tube-in-tube structure	Copper pipe,tube-in-tube structure	Copper pipe,tube-in-tube structure
Pipe between unit and distributor	Liquid pipe	mm (in.)	12.7(1/2) Brazed	12.7(1/2) Brazed	12.7(1/2) Brazed
	Gas pipe	mm (in.)	22.2(7/8) Brazed	22.2(7/8) Brazed	22.2(7/8) Brazed
Drawing	External		KB94T659		
	Wiring		KE94C317	KE94C317	KE94C317
Standard attachment	Document		Installation Manual		
	Accessory		Refrigerant conn. pipe		
Optional parts			Heat Source Twinning kit: CMY-Y300VBK2 Joint: CMY-Y102S-G2,CMY-Y102L-G2,CMY-Y202-G2,CMY-Y302-G2 Header: CMY-Y104/108/1010-G		
Remarks			* Details on foundation work, duct work, insulation work, electrical wiring, power source switch, and other items shall be referred to the Installation Manual. * Due to continuing improvement, above specifications may be subject to change without notice. * The ambient temperature of the heat source unit needs to be kept below 40°C D.B. * The ambient relative humidity of the heat source unit needs to be kept below 80%. * The heat source unit should not be installed at outdoor. * Be sure to mount a strainer (more than 50 meshes) at the water inlet piping of the unit. * Be sure to provide interlocking for the unit operation and water circuit.		

Notes :

1.Nominal cooling conditions(subject to JIS B8615-1)
Indoor:27°CDB/19°CWB(81°FDB/66°FWB), Water temperature:30°C(86°F)
Pipe length:7.5m(24-9/16ft.), Level difference:0m(0ft.)
2.Nominal heating conditions(subject to JIS B8615-1)
Indoor:20°CDB(68°FDB), Water temperature:20°C(68°F)
Pipe length:7.5m(24-9/16ft.), Level difference:0m(0ft.)

Unit converter	
kcal	=kW x 860
BTU/h	=kW x 3,412
cfm	=m^3/min x 35.31
lb	=kg / 0.4536

*Above specification data is subject to rounding variation.

WY

1. SPECIFICATIONS

Model			PQHY-P900YSHM-A
Power source			3-phase 4-wire 380-400-415V 50/60Hz
Cooling capacity (Nominal)	*1	kW	101.0
	*1	kcal / h	86,900
	*1	BTU / h	344,600
	Power input	kW	23.22
	Current input	A	39.1-37.2-35.8
	COP	kW / kW	4.34
Temp. range of cooling	Indoor	W.B.	15.0 ~ 24.0°C(59 ~ 75°F)
	Circulating water	°C	10.0 ~ 45.0°C(50 ~ 113°F)
Heating capacity (Nominal)	*2	kW	113.0
	*2	kcal / h	97,200
	*2	BTU / h	385,600
	Power input	kW	25.67
	Current input	A	43.3-41.1-39.6
	COP	kW / kW	4.40
Temp. range of heating	Indoor	D.B.	15.0 ~ 27.0°C(59 ~ 81°F)
	Circulating water	°C	10.0 ~ 45.0°C(50 ~ 113°F)
Indoor unit connectable	Total capacity		50 ~ 130 % of heat source unit capacity
	Model / Quantity		P15 ~ P250 / 2 ~ 50
Sound pressure level (measured in anechoic room)		dB <A>	55
Refrigerant piping diameter	Liquid pipe	mm (in.)	19.05(3/4) Brazed
	Gas pipe	mm (in.)	41.28(1-5/8) Brazed

Set Model

Model			PQHY-P300YHM-A	PQHY-P300YHM-A	PQHY-P300YHM-A
Circulating water	Water flow rate	m^3 / h	5.76 + 5.76 + 5.76		
		L / min	96 + 96 + 96		
		cfm	3.4 + 3.4 + 3.4		
	Pressure drop	kPa	17	17	17
	Operating volume range	m^3 / h	4.5 + 4.5 + 4.5 ~ 7.2 + 7.2 + 7.2		
Compressor	Type x Quantity		Inverter scroll hermetic compressor	Inverter scroll hermetic compressor	Inverter scroll hermetic compressor
	Manufacture		AC&R Works, MITSUBISHI ELECTRIC CORPORATION	AC&R Works, MITSUBISHI ELECTRIC CORPORATION	AC&R Works, MITSUBISHI ELECTRIC CORPORATION
	Starting method		Inverter	Inverter	Inverter
	Motor output	kW	7.4	7.4	7.4
	Case heater	kW	0.035(240 V)	0.035(240 V)	0.035(240 V)
	Lubricant		MEL32	MEL32	MEL32
External finish			Acrylic painted steel plate	Acrylic painted steel plate	Acrylic painted steel plate
External dimension HxWxD		mm	1,160(1,100 without legs) x 880 x 550	1,160(1,100 without legs) x 880 x 550	1,160(1,100 without legs) x 880 x 550
		in.	45-11/16(43-5/16 without legs) x 34-11/16 x 21-11/16	45-11/16(43-5/16 without legs) x 34-11/16 x 21-11/16	45-11/16(43-5/16 without legs) x 34-11/16 x 21-11/16
Protection devices	High pressure protection		High pressure sensor, High pressure switch at 4.15MPa (601 psi)	High pressure sensor, High pressure switch at 4.15MPa (601 psi)	High pressure sensor, High pressure switch at 4.15MPa (601 psi)
	Inverter circuit (COMP.)		Over-heat protection, Over-current protection	Over-heat protection, Over-current protection	Over-heat protection, Over-current protection
	Compressor		Over-heat protection	Over-heat protection	Over-heat protection
Refrigerant	Type x original charge		R410A x 5.0kg (12lbs)	R410A x 5.0kg (12lbs)	R410A x 5.0kg (12lbs)
	Control		LEV and HIC circuit		
Net weight		kg (lbs)	195(430)	195(430)	195(430)
Heat exchanger			plate type	plate type	plate type
	Water volume in plate	l	5.0	5.0	5.0
	Water pressure Max.	MPa	1.0	1.0	1.0
HIC circuit (HIC: Heat Inter-Changer)			Copper pipe,tube-in-tube structure	Copper pipe,tube-in-tube structure	Copper pipe,tube-in-tube structure
Pipe between unit and distributor	Liquid pipe	mm (in.)	12.7(1/2) Brazed	12.7(1/2) Brazed	12.7(1/2) Brazed
	Gas pipe	mm (in.)	22.2(7/8) Brazed	22.2(7/8) Brazed	22.2(7/8) Brazed
Drawing	External		KB94T659		
	Wiring		KE94C317	KE94C317	KE94C317
Standard attachment	Document		Installation Manual		
	Accessory		Refrigerant conn. pipe		
Optional parts			Heat Source Twinning kit: CMY-Y300VBK2 Joint: CMY-Y102S-G2,CMY-Y102L-G2,CMY-Y202-G2,CMY-Y302-G2 Header: CMY-Y104/108/1010-G		
Remarks			* Details on foundation work, duct work, insulation work, electrical wiring, power source switch, and other items shall be referred to the Installation Manual. * Due to continuing improvement, above specifications may be subject to change without notice. * The ambient temperature of the heat source unit needs to be kept below 40°C D.B. * The ambient relative humidity of the heat source unit needs to be kept below 80%. * The heat source unit should not be installed at outdoor. * Be sure to mount a strainer (more than 50 meshes) at the water inlet piping of the unit. * Be sure to provide interlocking for the unit operation and water circuit.		

Notes :

1.Nominal cooling conditions(subject to JIS B8615-1)
Indoor:27°CDB/19°CWB(81°FDB/66°FWB), Water temperature:30°C(86°F)
Pipe length:7.5m(24-9/16ft.), Level difference:0m(0ft.)
2.Nominal heating conditions(subject to JIS B8615-1)
Indoor:20°CDB(68°FDB), Water temperature:20°C(68°F)
Pipe length:7.5m(24-9/16ft.), Level difference:0m(0ft.)

Unit converter	
kcal	=kW x 860
BTU/h	=kW x 3,412
cfm	=m^3/min x 35.31
lb	=kg / 0.4536

*Above specification data is subject to rounding variation.

PQHY-P200, 250, 300YHM-A

Unit : mm

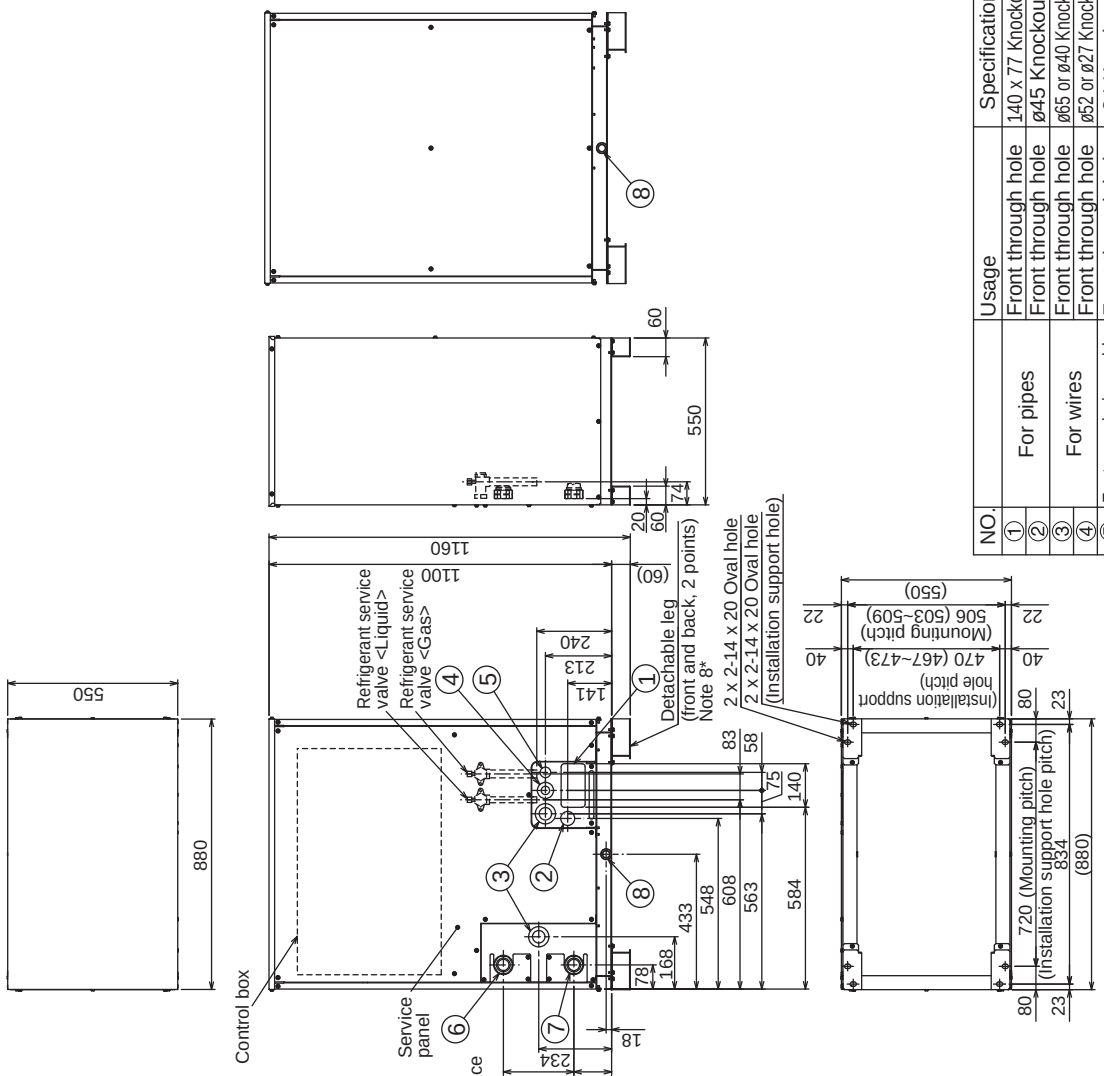

Fig. A

Fig. B

NO.		Usage	Specifications
①	For pipes	Front through hole	140 x 77 Knockout hole
②		Front through hole	ø45 Knockout hole
③	For wires	Front through hole	ø65 or ø40 Knockout hole
④		Front through hole	ø52 or ø27 Knockout hole
⑤	For transmission cables	Front through hole	ø34 Knockout hole
⑥	Water pipe	inlet	Rc1-1/2 Screw
⑦		outlet	Rc1-1/2 Screw
⑧	Drain pipe	Rc3/4 Screw	

Note 1. Close a hole of the water piping, the refrigerant piping, the power supply, and the control wiring and unused knockout holes with the putty etc. so as not to infiltrate rain water etc. (field erection work)

Note 2. At the time of product shipment, the front side piping specification serves as the local drainage connection. When connecting on the rear side, please remove the rear side plug sealing corks, and attach a front side. Ensure there is no leak after the attachment has been fitted.

Note 3. Take notice of service space as Fig. A. (In case of single installation, 600mm or more of back space as front space makes easier access when servicing the unit from rear side)

Note 4. If water pipes or refrigerant pipes stretch upward, required space for service and maintenance due to replacement of control box is shown in Fig. B.

Note 5. Environmental condition for installation; -20~40°C (DB) as indoor installation.

Note 6. In case the temperature around the heat source unit has possibility to drop under 0°C, be careful for the following point to prevent the pipe burst by the water pipe freeze-up.
- Circulate the water all the time even if the heat source unit is not in operation.
- Drain the water from inside of the heat source unit when the heat source unit will not operate for a long term.

Note 7. Ensure that the drain piping is downward with a pitch of more than 1/100.

Note 8. The detachable leg can be removed at site.

Note 9. At brazing of pipes, wrap the refrigerant service valve with wet cloth and keep the temperature of refrigerant service valve under 120°C.

<Accessories>
- Refrigerant (Liquid) conn. pipe ·····1 pc. (P200/P250/P300 ; Packaged in the accessory kit)
- Refrigerant (Gas) conn. pipe ·····1 pc. (P200/P250/P300 ; Packaged in the accessory kit)

Connecting pipe specifications

Model	Connection specifications for the refrigerant service valve		
	Liquid	Gas	
PQHY-P200YHM-A	ø9.52 Brazed *1	ø19.05 Brazed	*1
PQHY-P250YHM-A		ø22.2 Brazed	*1
PQHY-P300YHM-A			

*1. Connect by using the connecting pipes that are supplied.

PQHY-P400, 450, 500, 550, 600YSHM-A

Unit : mm

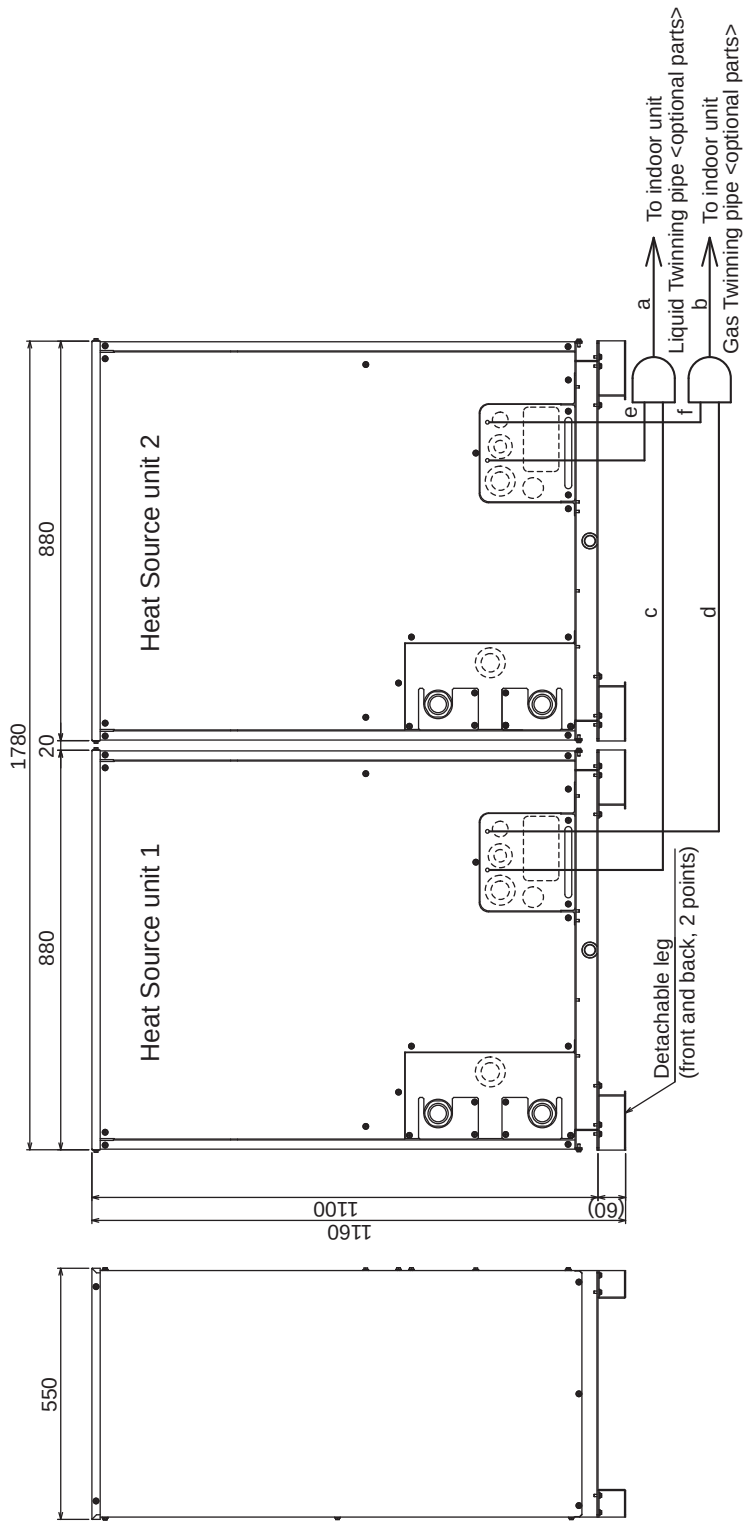

Note 1. Connect the pipes as shown in the figure above. Refer to the table below for the pipe size.
2. The detachable leg can be removed at site.
3. Twinning pipe should not be tilted more than 15 degrees from the ground.
4. See the Installation Manual for the details of Twinning pipe installation.
5. The length of the straight part of pipe connected in front of the twinning pipe must be 500mm (19inch) or longer.

Twinning pipe connection size

Package unit name			PQHY-P400YSHM-A	PQHY-P450YSHM-A	PQHY-P500YSHM-A	PQHY-P550YSHM-A	PQHY-P600YSHM-A
Component unit name	Heat Source unit 1		PQHY-P200YHM-A	PQHY-P250YHM-A	PQHY-P250YHM-A	PQHY-P300YHM-A	PQHY-P300YHM-A
	Heat Source unit 2		PQHY-P200YHM-A	PQHY-P200YHM-A	PQHY-P250YHM-A	PQHY-P250YHM-A	PQHY-P300YHM-A
Twinning pipe Kit (optional parts)			CMY-Y100VBK2				
Indoor unit ~ Twinning pipe	Liquid	a	ø12.7	ø15.88			
	Gas	b	ø28.58				
Twinning pipe ~ Heat Source unit 1	Liquid	c	ø9.52			ø12.7	
	Gas	d	ø19.05		ø22.2		
Twinning pipe ~ Heat Source unit 2	Liquid	e	ø9.52			ø12.7	
	Gas	f	ø19.05		ø22.2		

PQHY-P650, 700, 750, 800, 850, 900YSHM-A

Unit : mm

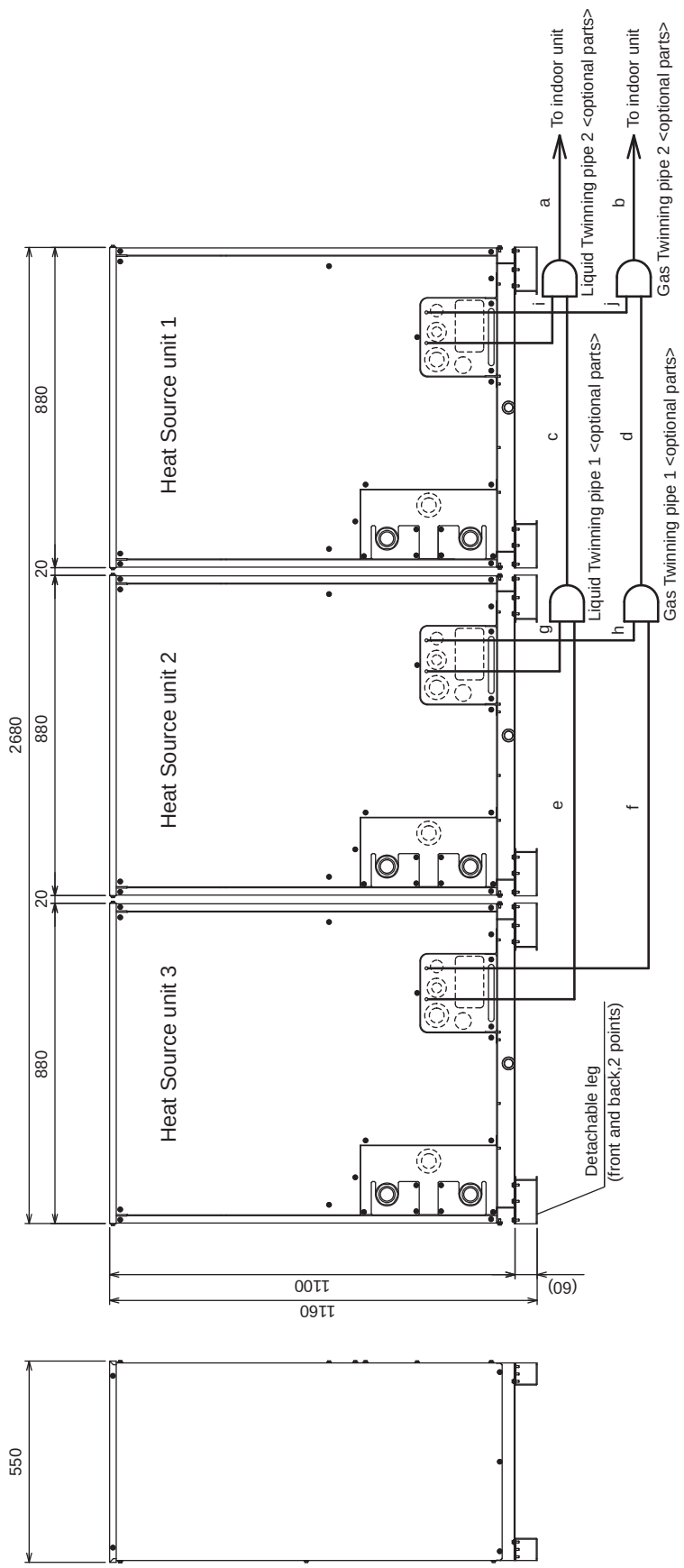

Twinning pipe connection size									
Package unit name		PQHY-P650YSHM-A	PQHY-P700YSHM-A	PQHY-P750YSHM-A	PQHY-P800YSHM-A	PQHY-P850YSHM-A	PQHY-P900YSHM-A		
Component unit name	Heat Source unit 1	PQHY-P250YHM-A	PQHY-P250YHM-A	PQHY-P250YHM-A	PQHY-P300YHM-A	PQHY-P300YHM-A	PQHY-P300YHM-A		
	Heat Source unit 2	PQHY-P200YHM-A	PQHY-P250YHM-A	PQHY-P250YHM-A	PQHY-P250YHM-A	PQHY-P300YHM-A	PQHY-P300YHM-A		
	Heat Source unit 3	PQHY-P200YHM-A	PQHY-P200YHM-A	PQHY-P250YHM-A	PQHY-P250YHM-A	PQHY-P250YHM-A	PQHY-P300YHM-A		
Twinning pipe Kit (optional parts)		CMY-Y300VBK2							
Indoor unit~Twinning pipe 2	Liquid	a	ø19.05						
	Gas	b	ø34.93			ø41.28			
Twinning pipe 1~Twinning pipe 2	Liquid	c	ø 19.05						
	Gas	d	ø34.93						

	Unit model	Liquid	Gas
Twinning pipe~Heat Source unit	P200	e or g or i	f or h or j
	P250	ø12.7	ø19.05
	P300		ø22.2

Note 1.Connect the pipes as shown in the figure above. Refer to the table below for the pipe size.
2.The detachable leg can be removed at site.
3.Twinning pipe should not be tilted more than 15 degrees from the ground.
4.See the Installation Manual for the details of Twinning pipe installation.
5.The pipe section before the Twinning pipe (sections "a", "b", "c" and "d" in the figure) must have at least 500mm(19inch) of straight section (*including the straight pipe that is supplied with the Twinning pipe).
6.Only use the Twinning pipe by Mitsubishi (optional parts).

WY

PQHY-P200,250,300YHM-A(-BS)

Unit : mm[in.]

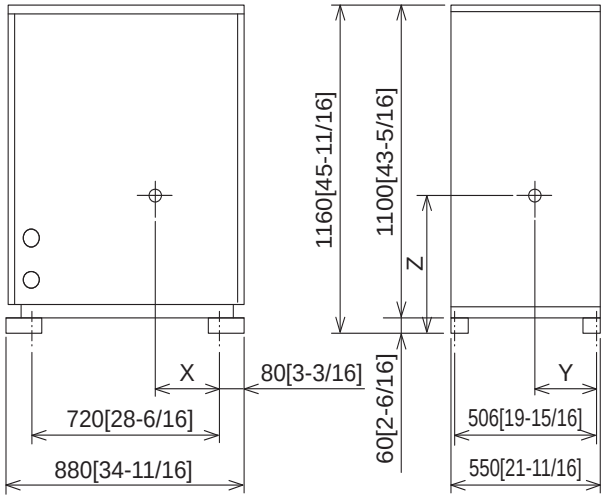

Model	X	Y	Z
PQHY-P200YHM-A[-BS]	418[16-8/16]	250[9-14/16]	532[21]
PQHY-P250YHM-A[-BS]	418[16-8/16]	250[9-14/16]	532[21]
PQHY-P300YHM-A[-BS]	418[16-8/16]	250[9-14/16]	532[21]

YM

PQHY-P200,250,300YHM-A(-BS)

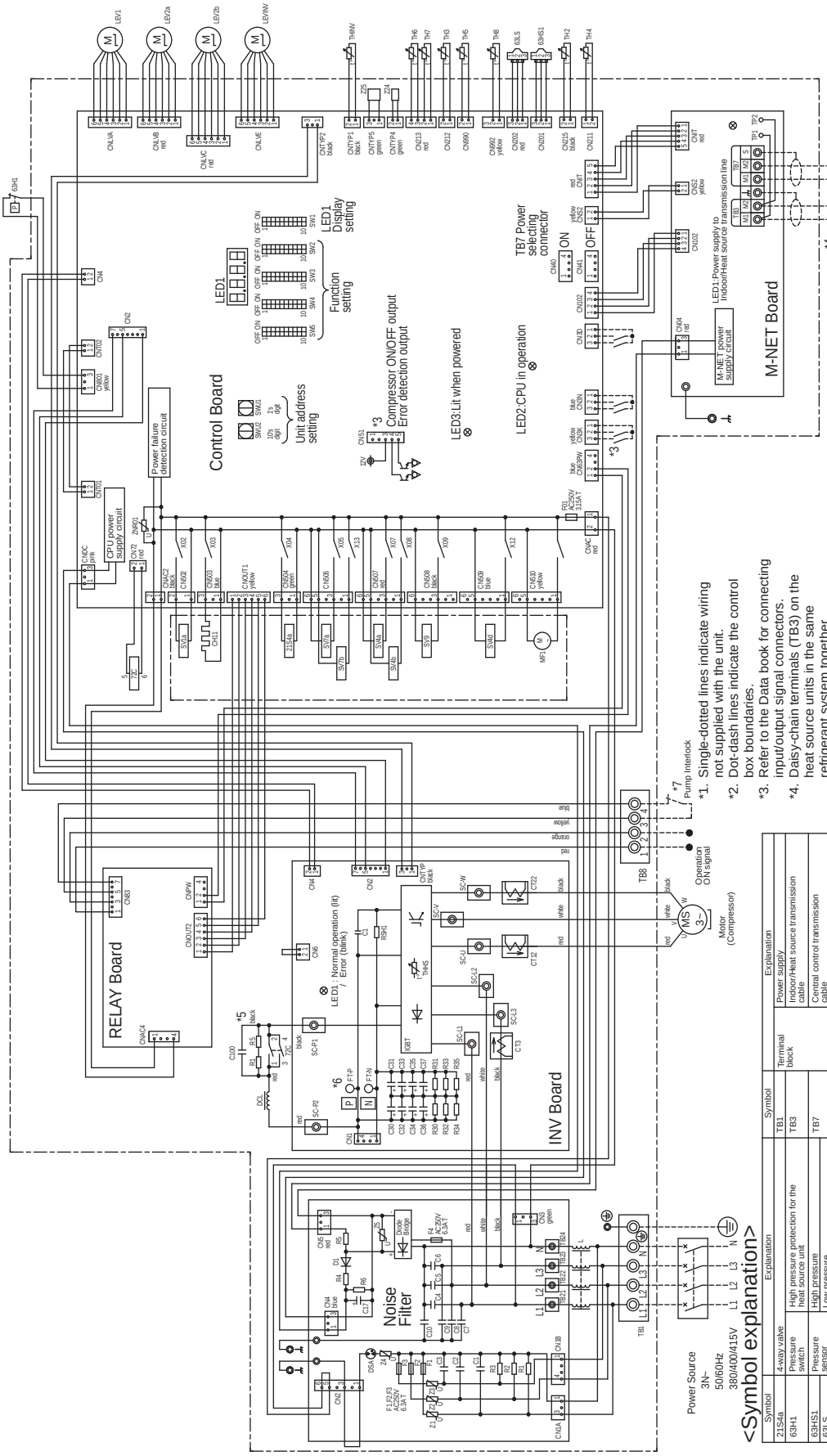

*1. Single-dotted lines indicate wiring not supplied with the unit.
*2. Dot-dash lines indicate the control box boundaries.
*3. Refer to the Data book for connecting input/output signal connectors.
*4. Daisy-chain terminals (TB3) on the heat source units in the same refrigerant system together.
*5. Faston terminals have a locking function. Make sure the terminals are securely locked in place after insertion. Press the tab on the terminals to removed them.
*6. Control box houses high-voltage parts. Before inspecting the inside of the control box, turn off the power, keep the unit off for at least 10 minutes, and confirm that the voltage between FT-P and FT-N on INV Board has dropped to 20VDC or less.
*7. Refer to the Data book for wiring terminal block for Pump Interlock (TB8).

<Symbol explanation>

Symbol	Explanation
21S4a	4-way valve
63H1	Pressure switch — High pressure protection for the heat source unit
63HS1	Pressure sensor — High pressure
63LS	Pressure sensor — Low pressure
72C	Magnetic relay (Inverter main circuit)
CT12, 22, 3	Current sensor (AC)
CH11	Crankcase heater (for heating the compressor)
DCL	DC reactor
LEV1	Linear expansion valve — HIC bypass; Controls refrigerant flow in HIC circuit
LEV2a, b	Linear expansion valve — Pressure control; Refrigerant flow rate control
LEVINV	Heat exchanger for inverter
MF1	Fan motor (Radiator panel)
SV1a	Solenoid valve — For opening/closing the bypass circuit under the OIS
SV4a, b, d	Heat exchanger capacity control
SV7a, b	Heat exchanger capacity control
SV9	For opening/closing the bypass circuit

Symbol	Explanation
TB1	Power supply
TB3	Terminal block — Indoor/Heat source transmission cable
TB7	Central control transmission cable
TB8	Operation ON signal, Pump Interlock
TH2	Thermistor — Subcool bypass outlet temperature
TH3	Pipe temperature
TH4	Discharge pipe temperature
TH5	ACC inlet pipe temperature
TH6	Subcooled liquid refrigerant temperature
TH7	Water inlet temperature
TH8	Water outlet temperature
THINV	Outlet temp. detect of heat exchanger for inverter
THHS	IGBT temperature
Z24, 25	Function setting connector

Measurement condition
PQHY-P200,250,300YHM-A

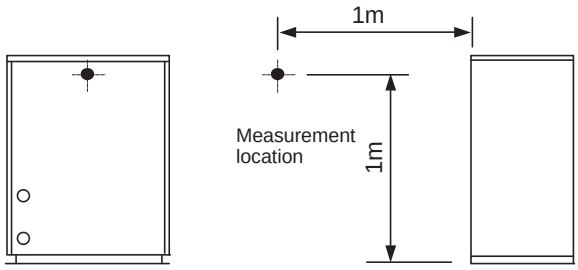

Sound level of PQHY-P300YHM-A

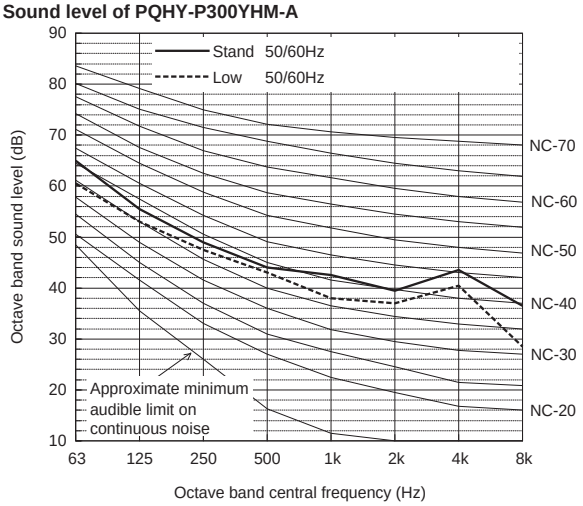

		63	125	250	500	1k	2k	4k	8k	dB(A)
Standard	50/60Hz	65.0	55.5	49.0	44.0	42.5	39.5	43.5	36.5	50.0
Low noise mode	50/60Hz	60.5	53.0	47.5	43.0	38.0	37.0	40.5	28.5	47.0

When Low noise mode is set,the A/C system's capacity is limited. The system could return to normal operation from Low noise mode automatically in the case that the operation condition is severe.

Sound level of PQHY-P200YHM-A

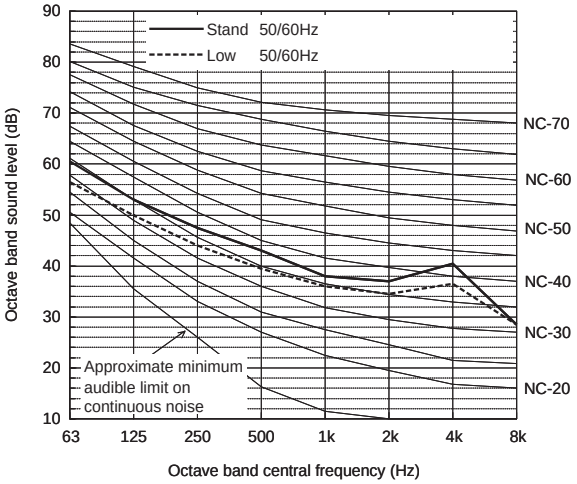

		63	125	250	500	1k	2k	4k	8k	dB(A)
Standard	50/60Hz	60.5	53.0	47.5	43.0	38.0	37.0	40.5	28.5	47.0
Low noise mode	50/60Hz	56.5	50.0	44.0	39.5	36.0	34.5	36.5	28.5	44.0

When Low noise mode is set,the A/C system's capacity is limited. The system could return to normal operation from Low noise mode automatically in the case that the operation condition is severe.

Sound level of PQHY-P250YHM-A

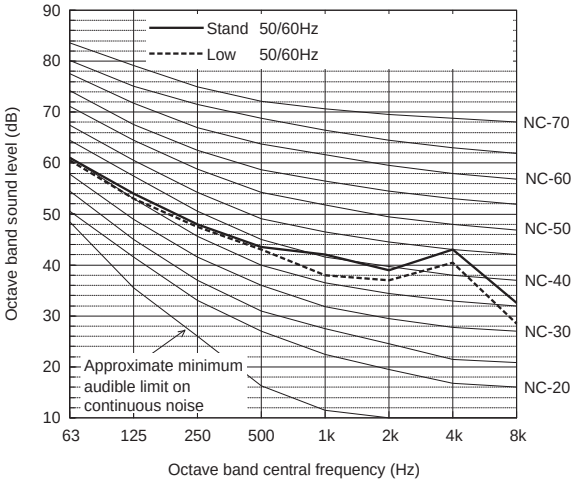

		63	125	250	500	1k	2k	4k	8k	dB(A)
Standard	50/60Hz	61.0	54.0	48.0	43.5	42.0	39.0	43.0	32.5	49.0
Low noise mode	50/60Hz	60.5	53.0	47.5	43.0	38.0	37.0	40.5	28.5	47.0

When Low noise mode is set,the A/C system's capacity is limited. The system could return to normal operation from Low noise mode automatically in the case that the operation condition is severe.

WY

5. SOUND LEVELS

Measurement condition
PQHY-P400,450,500,550,600YSHM-A

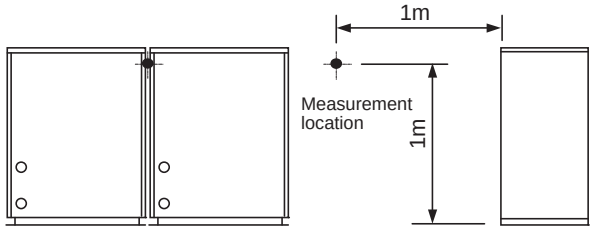

Sound level of PQHY-P500YSHM-A

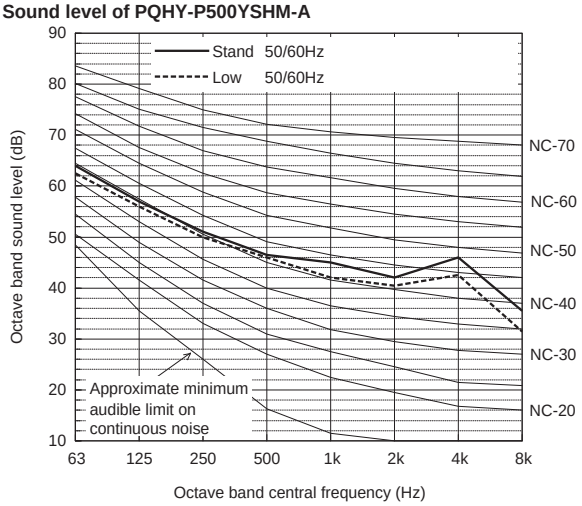

		63	125	250	500	1k	2k	4k	8k	dB(A)
Standard	50/60Hz	64.0	57.0	51.0	46.5	45.0	42.0	46.0	35.5	52.0
Low noise mode	50/60Hz	62.5	56.0	50.0	46.0	42.0	40.5	42.5	31.5	50.0

When Low noise mode is set,the A/C system's capacity is limited. The system could return to normal operation from Low noise mode automatically in the case that the operation condition is severe.

Sound level of PQHY-P400YSHM-A

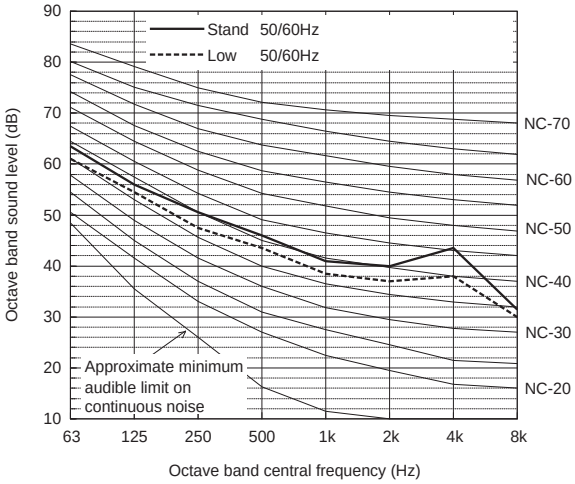

		63	125	250	500	1k	2k	4k	8k	dB(A)
Standard	50/60Hz	63.5	56.0	50.5	46.0	41.0	40.0	43.5	31.5	50.0
Low noise mode	50/60Hz	61.0	54.5	47.5	43.5	38.5	37.0	38.0	30.0	47.0

When Low noise mode is set,the A/C system's capacity is limited. The system could return to normal operation from Low noise mode automatically in the case that the operation condition is severe.

Sound level of PQHY-P550YSHM-A

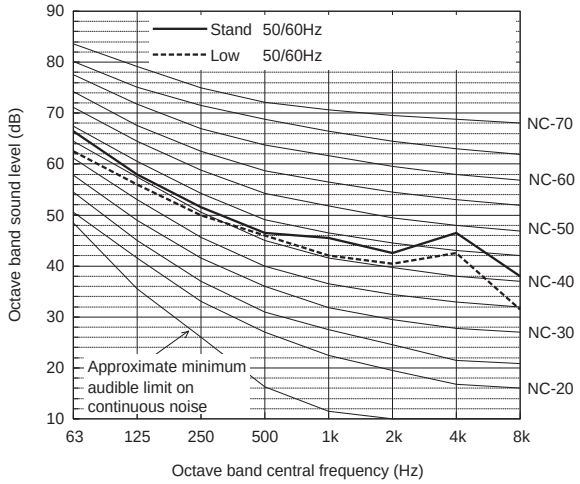

		63	125	250	500	1k	2k	4k	8k	dB(A)
Standard	50/60Hz	66.5	58.0	51.5	46.5	45.5	42.5	46.5	38.0	52.5
Low noise mode	50/60Hz	62.5	56.0	50.0	46.0	42.0	40.5	42.5	31.5	50.0

When Low noise mode is set,the A/C system's capacity is limited. The system could return to normal operation from Low noise mode automatically in the case that the operation condition is severe.

Sound level of PQHY-P450YSHM-A

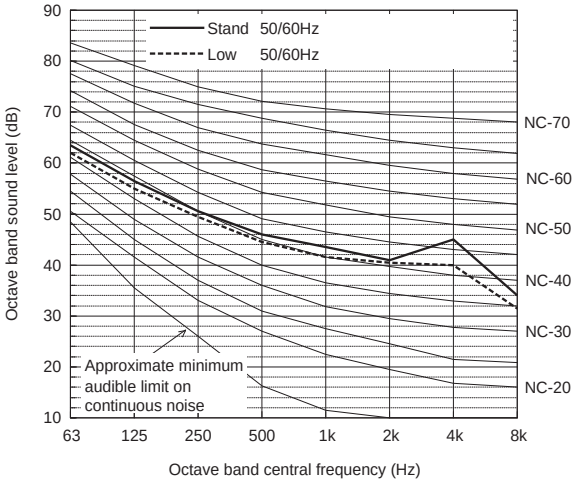

		63	125	250	500	1k	2k	4k	8k	dB(A)
Standard	50/60Hz	63.5	56.5	50.5	46.0	43.5	41.0	45.0	34.0	51.0
Low noise mode	50/60Hz	62.0	55.0	49.5	44.5	41.5	40.5	40.0	31.5	49.0

When Low noise mode is set,the A/C system's capacity is limited. The system could return to normal operation from Low noise mode automatically in the case that the operation condition is severe.

Sound level of PQHY-P600YSHM-A

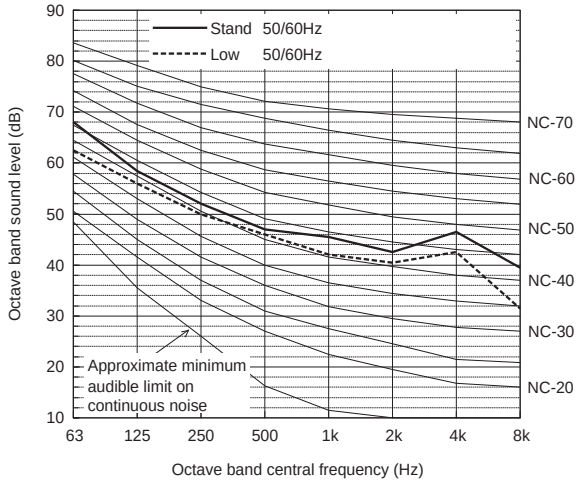

		63	125	250	500	1k	2k	4k	8k	dB(A)
Standard	50/60Hz	68.0	58.5	52.0	47.0	45.5	42.5	46.5	39.5	53.0
Low noise mode	50/60Hz	62.5	56.0	50.0	46.0	42.0	40.5	42.5	31.5	50.0

When Low noise mode is set,the A/C system's capacity is limited. The system could return to normal operation from Low noise mode automatically in the case that the operation condition is severe.

5. SOUND LEVELS

Measurement condition
PQHY-P650, 700, 750, 800, 850YSHM-A

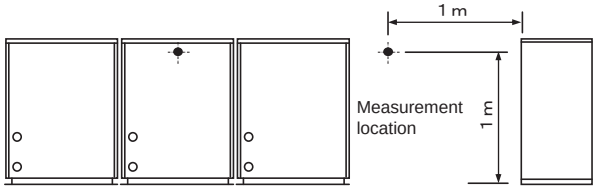

Sound level of PQHY-P750YSHM-A(-BS)

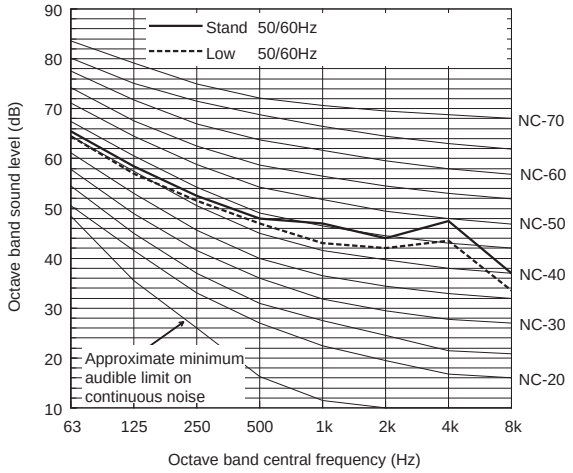

		63	125	250	500	1k	2k	4k	8k	dB(A)
Standard	50/60Hz	65.5	58.5	52.5	48.0	47.0	44.0	47.5	37.0	54.0
Low noise mode	50/60Hz	64.5	57.0	51.5	47.0	43.0	42.0	43.5	33.5	51.5

When Low noise mode is set,the A/C system's capacity is limited. The system could return to normal operation from Low noise mode automatically in the case that the operation condition is severe.

Sound level of PQHY-P650YSHM-A(-BS)

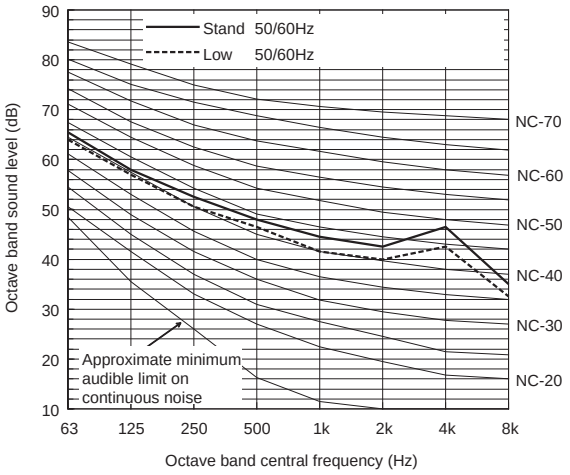

		63	125	250	500	1k	2k	4k	8k	dB(A)
Standard	50/60Hz	65.5	58.0	52.5	48.0	44.5	42.5	46.5	35.0	53.0
Low noise mode	50/60Hz	64.0	57.0	50.5	46.5	41.5	40.0	42.5	32.5	50.5

When Low noise mode is set,the A/C system's capacity is limited. The system could return to normal operation from Low noise mode automatically in the case that the operation condition is severe.

Sound level of PQHY-P800YSHM-A(-BS)

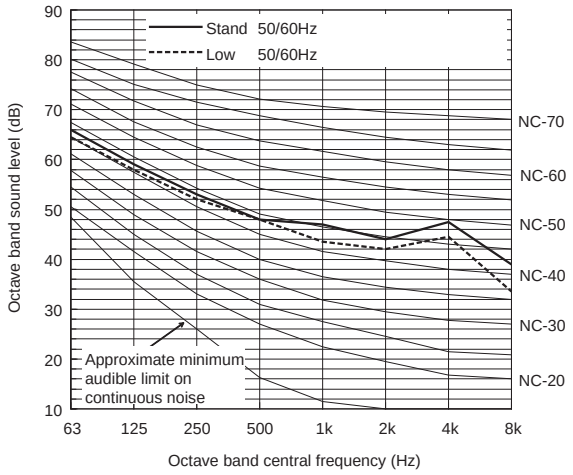

		63	125	250	500	1k	2k	4k	8k	dB(A)
Standard	50/60Hz	66.0	59.0	53.0	48.0	47.0	44.0	47.5	39.0	54.0
Low noise mode	50/60Hz	64.5	58.0	52.0	48.0	43.5	42.0	44.5	33.5	52.0

When Low noise mode is set,the A/C system's capacity is limited. The system could return to normal operation from Low noise mode automatically in the case that the operation condition is severe.

Sound level of PQHY-P700YSHM-A(-BS)

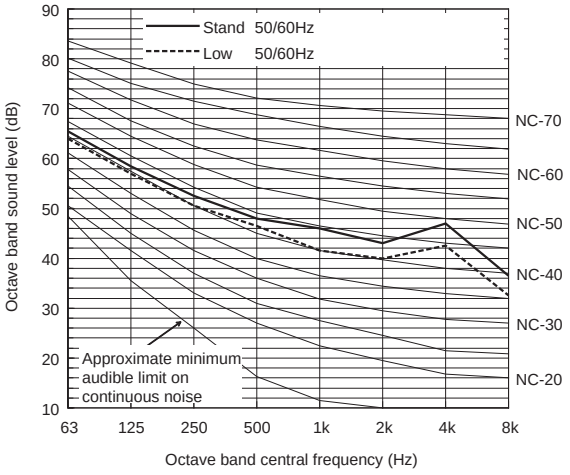

		63	125	250	500	1k	2k	4k	8k	dB(A)
Standard	50/60Hz	65.5	58.5	52.5	48.0	46.0	43.0	47.0	36.5	53.5
Low noise mode	50/60Hz	64.0	57.0	50.5	46.5	41.5	40.0	42.5	32.5	50.5

When Low noise mode is set,the A/C system's capacity is limited. The system could return to normal operation from Low noise mode automatically in the case that the operation condition is severe.

Sound level of PQHY-P850YSHM-A(-BS)

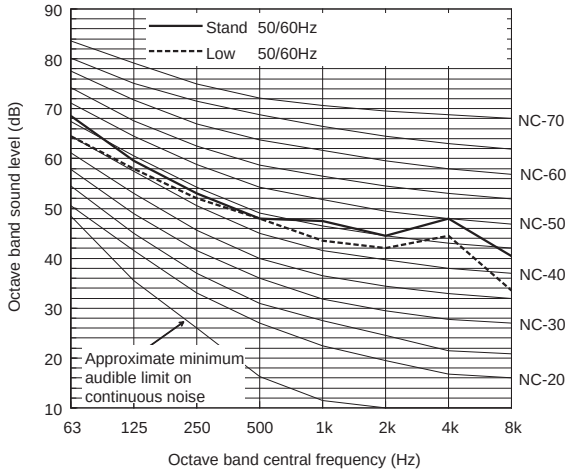

		63	125	250	500	1k	2k	4k	8k	dB(A)
Standard	50/60Hz	68.5	59.5	53.0	48.0	47.5	44.5	48.0	40.5	54.5
Low noise mode	50/60Hz	64.5	58.0	52.0	48.0	43.5	42.0	44.5	33.5	52.0

When Low noise mode is set,the A/C system's capacity is limited. The system could return to normal operation from Low noise mode automatically in the case that the operation condition is severe.

5. SOUND LEVELS

Measurement condition
PQHY-P900YSHM-A

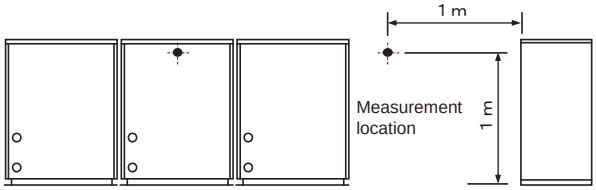

Sound level of PQHY-P900YSHM-A(-BS)

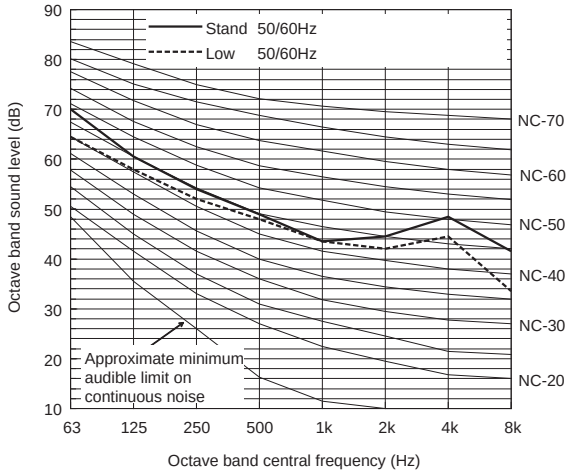

		63	125	250	500	1k	2k	4k	8k	dB(A)
Standard	50/60Hz	70.0	60.5	54.0	49.0	43.5	44.5	48.5	41.5	55.0
Low noise mode	50/60Hz	64.5	58.0	52.0	48.0	43.5	42.0	44.5	33.5	52.0

When Low noise mode is set,the A/C system's capacity is limited. The system could return to normal operation from Low noise mode automatically in the case that the operation condition is severe.

WY

6. CAPACITY TABLES

6-1. Correction by temperature

CITY MULTI could have various capacities at different designing temperatures. Using the nominal cooling/heating capacity values and the ratios below, the capacity can be found for various temperatures.

		PQHY-P200YHM-A	PQRY-P200YHM-A
Nominal Cooling Capacity	kW	22.4	22.4
	BTU/h	76,400	76,400
Input	kW	3.92	3.96

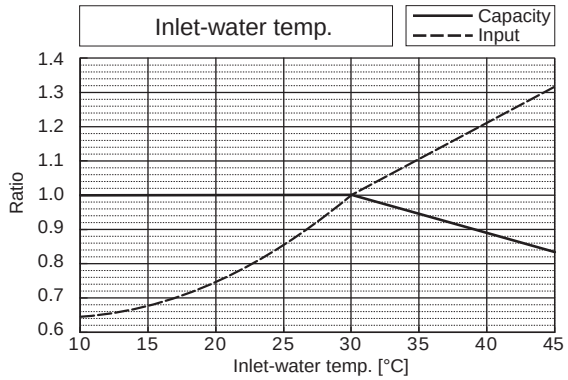

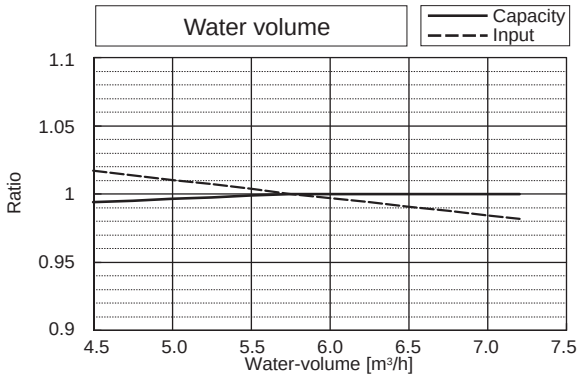

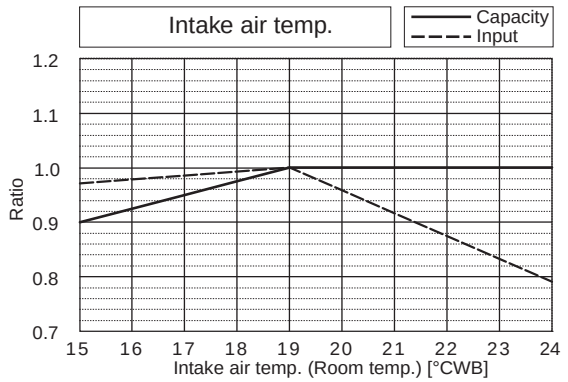

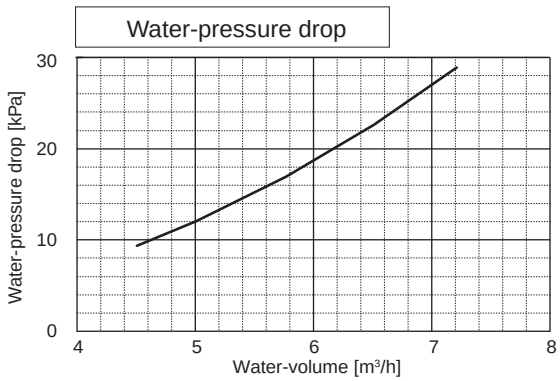

		PQHY-P200YHM-A	PQRY-P200YHM-A
Nominal Heating Capacity	kW	25.0	25.0
	BTU/h	85,300	85,300
Input	kW	4.12	4.12

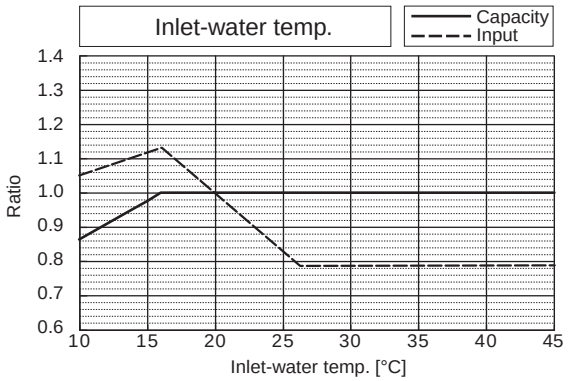

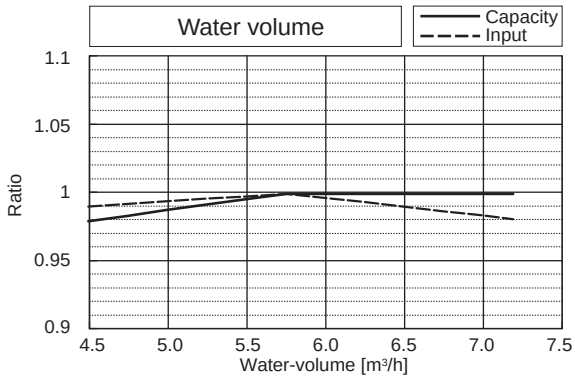

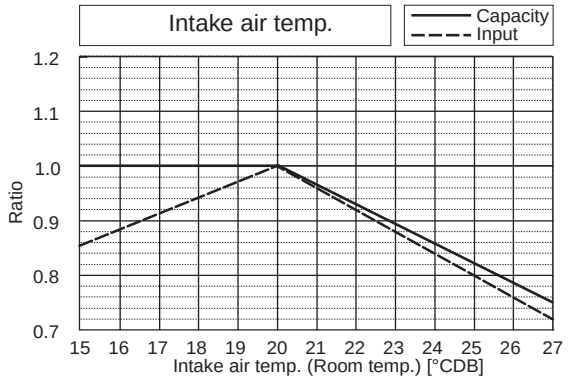

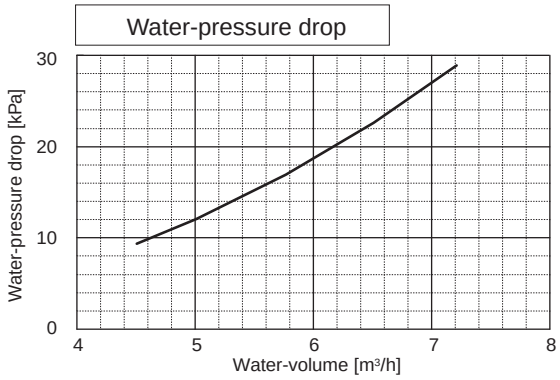

WY

		PQHY-P250YHM-A	PQRY-P250YHM-A
Nominal Cooling Capacity	kW	28.0	28.0
	BTU/h	95,500	95,500
Input	kW	5.45	5.51

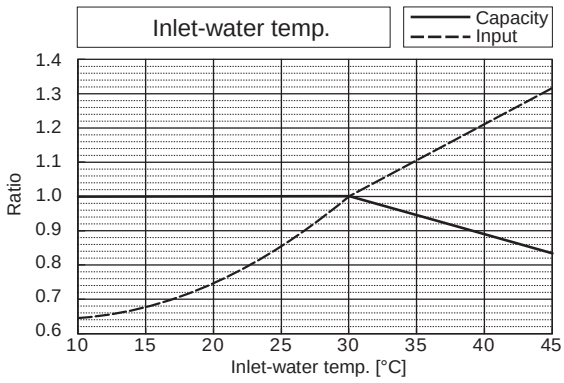

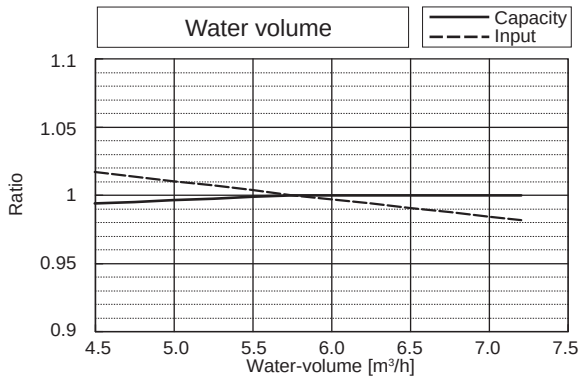

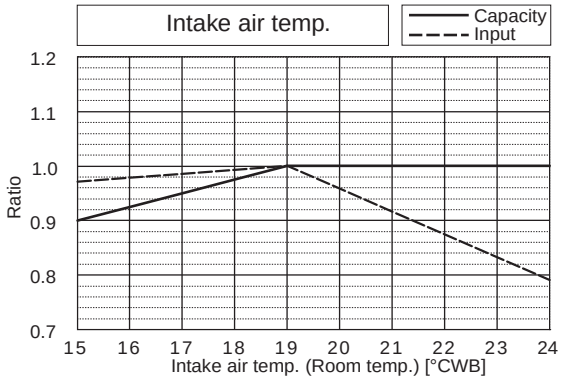

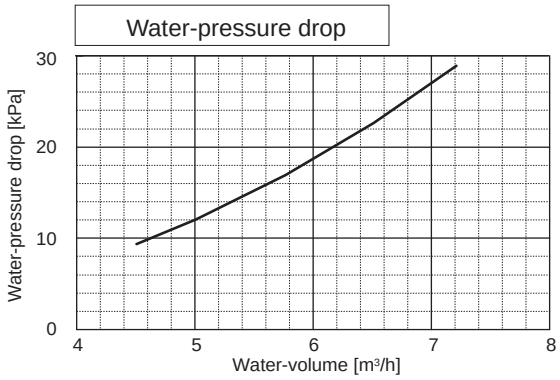

		PQHY-P250YHM-A	PQRY-P250YHM-A
Nominal Heating Capacity	kW	31.5	31.5
	BTU/h	107,500	107,500
Input	kW	5.80	5.80

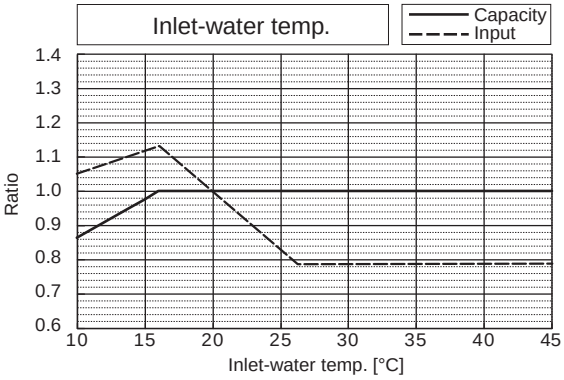

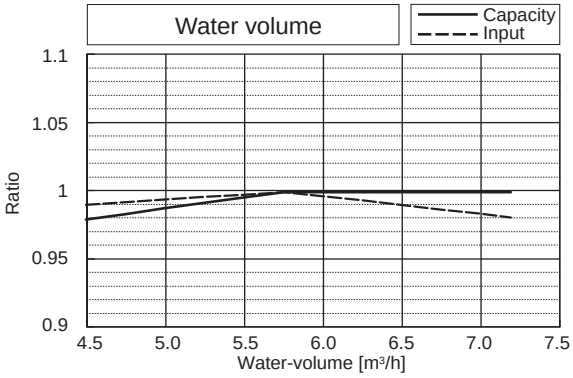

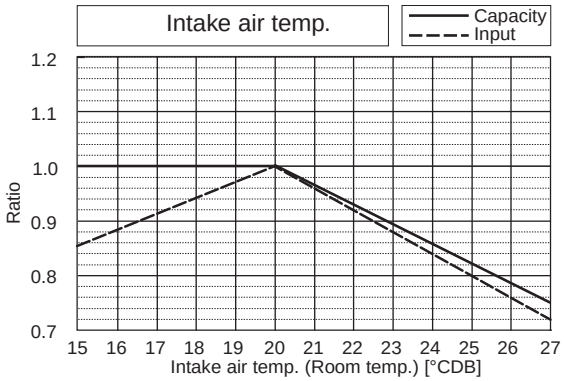

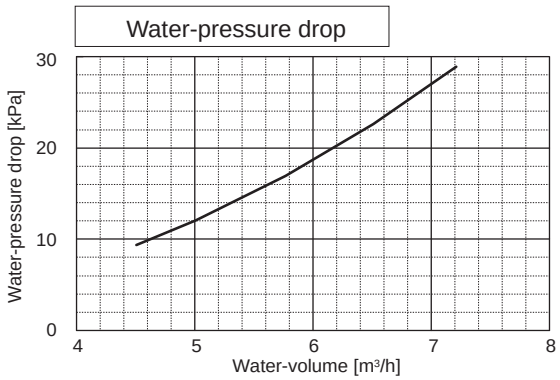

WY

		PQHY-P300YHM-A	PQRY-P300YHM-A
Nominal Cooling Capacity	kW	33.5	33.5
	BTU/h	114,300	114,300
Input	kW	7.36	7.44

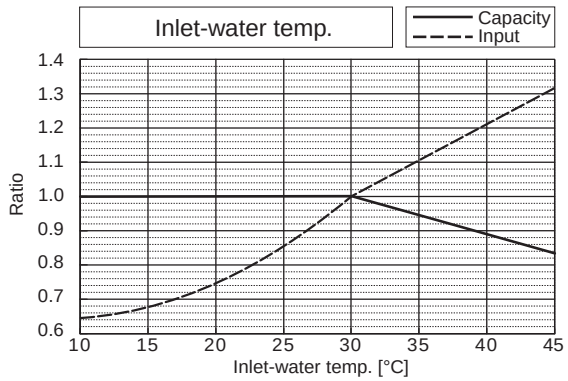

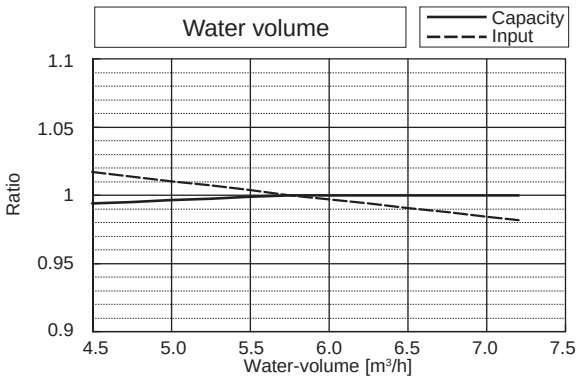

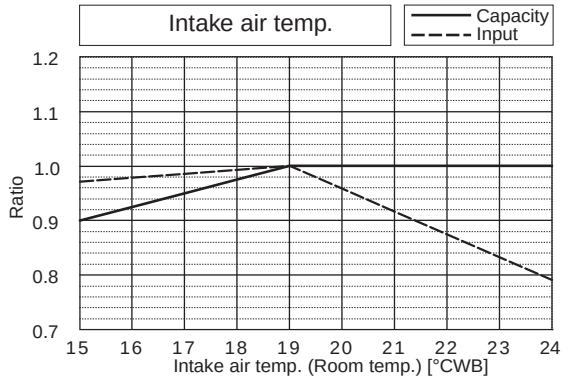

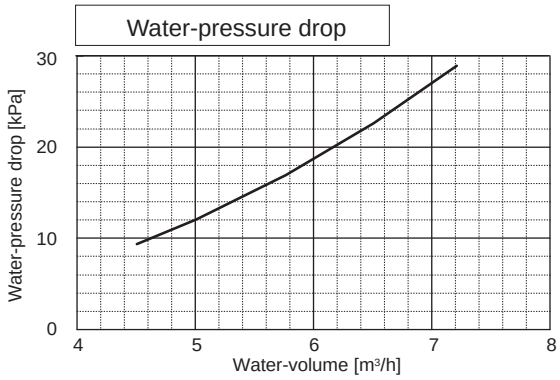

WY

		PQHY-P300YHM-A	PQRY-P300YHM-A
Nominal Heating Capacity	kW	37.5	37.5
	BTU/h	128,000	128,000
Input	kW	8.15	8.15

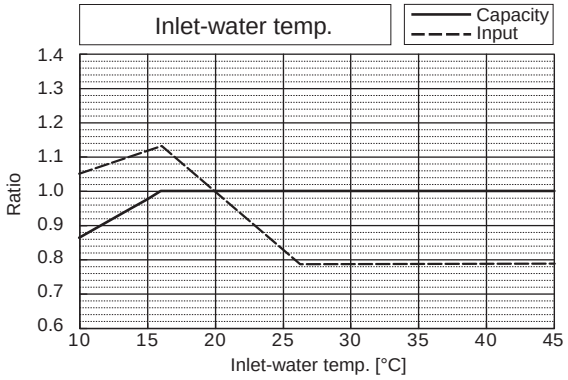

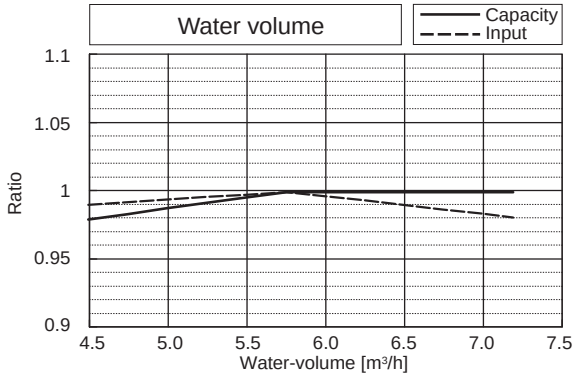

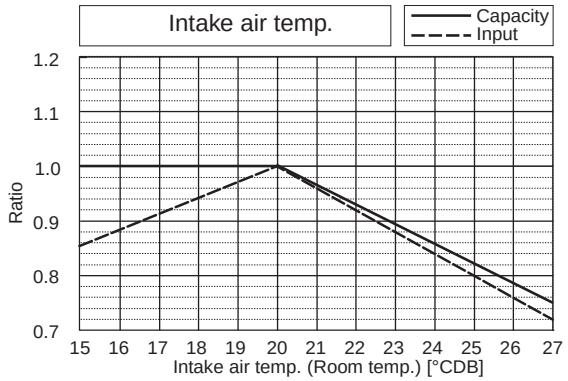

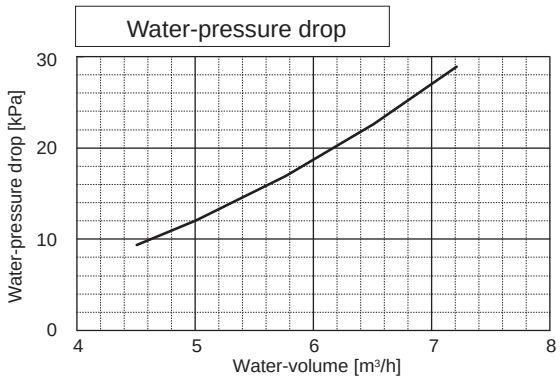

6. CAPACITY TABLES

		PQHY-P400YSHM-A	PQRY-P400YSHM-A
Nominal Cooling Capacity	kW	45.0	45.0
	BTU/h	153,500	153,500
Input	kW	8.25	8.32

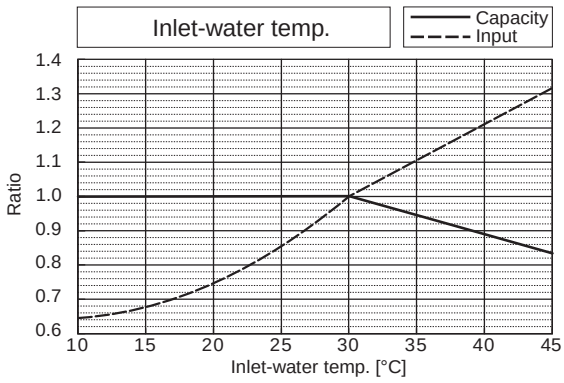

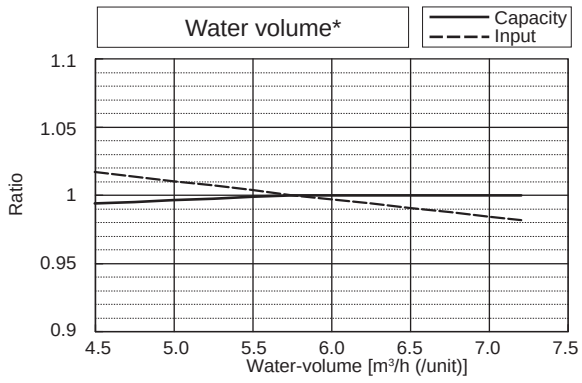

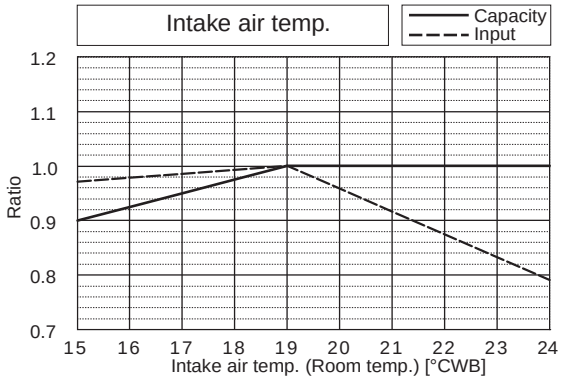

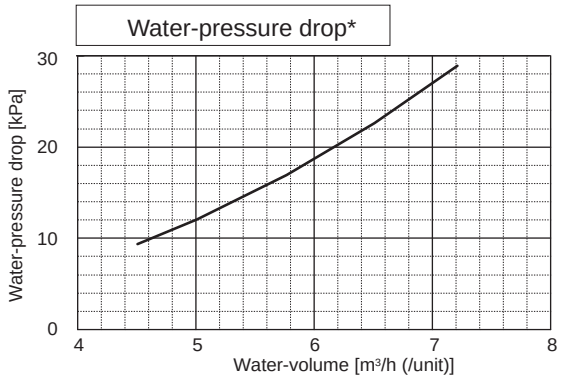

*The drawing indicates characteristic per unit.

		PQHY-P400YSHM-A	PQRY-P400YSHM-A
Nominal Heating Capacity	kW	50.0	50.0
	BTU/h	170,600	170,600
Input	kW	8.65	8.65

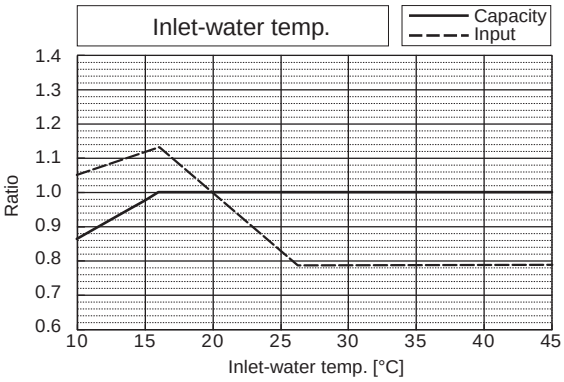

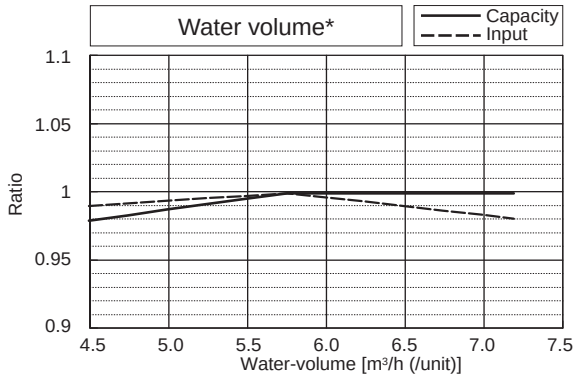

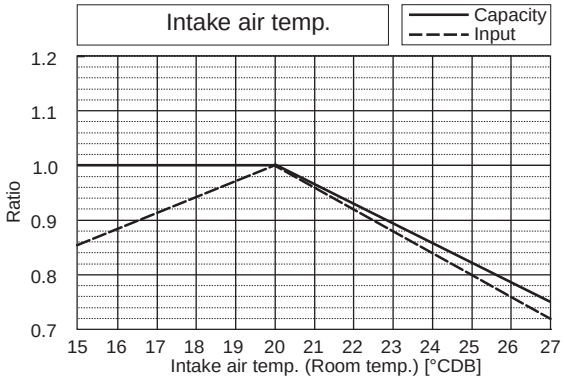

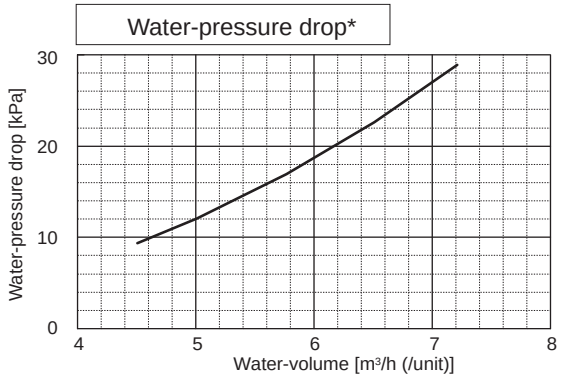

*The drawing indicates characteristic per unit.

WY

		PQHY-P450YSHM-A	PQRY-P450YSHM-A
Nominal Cooling Capacity	kW	50.0	50.0
	BTU/h	170,600	170,600
Input	kW	9.84	9.94

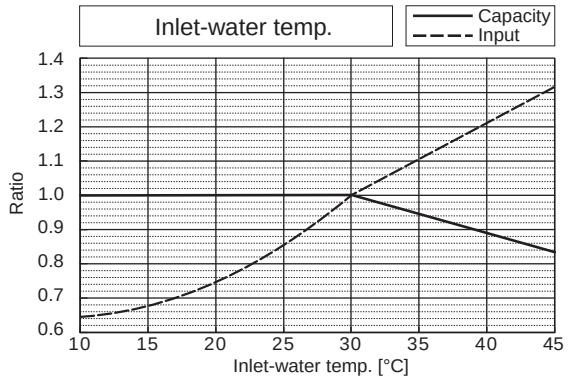

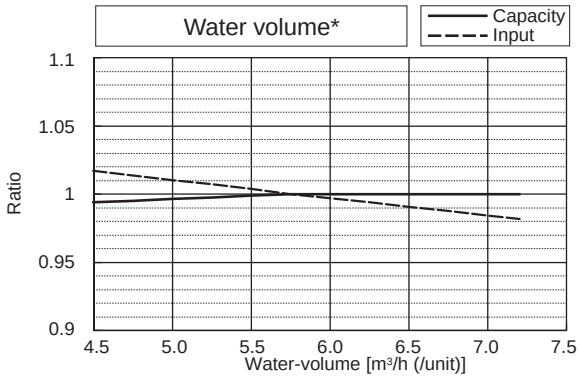

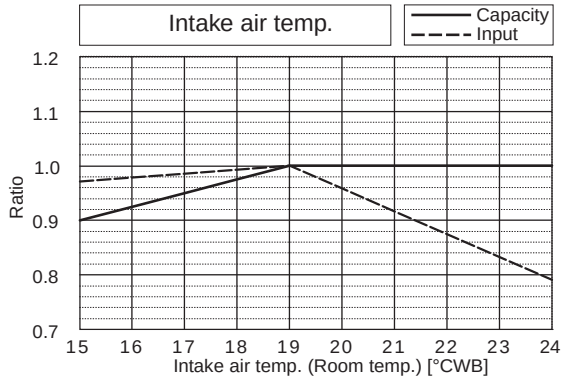

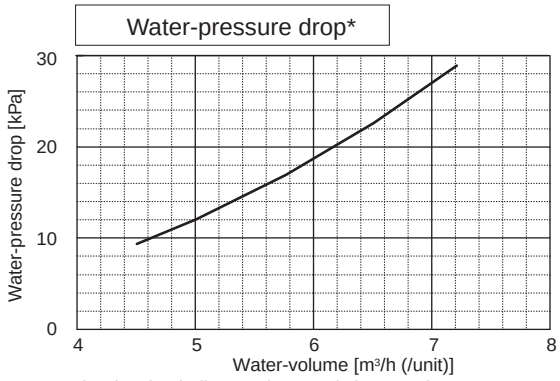

*The drawing indicates characteristic per unit.

WY

		PQHY-P450YSHM-A	PQRY-P450YSHM-A
Nominal Heating Capacity	kW	56.0	56.0
	BTU/h	191,100	191,100
Input	kW	10.42	10.42

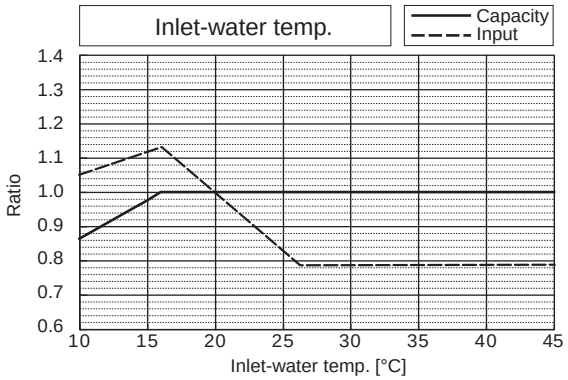

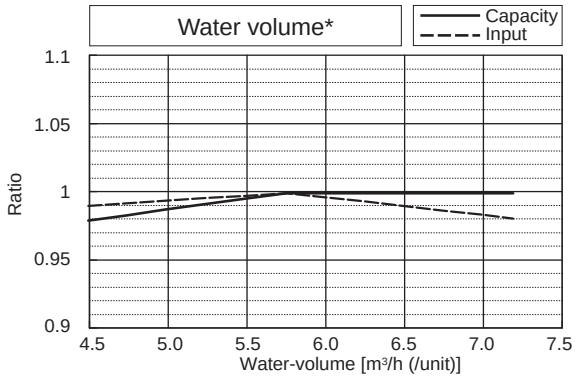

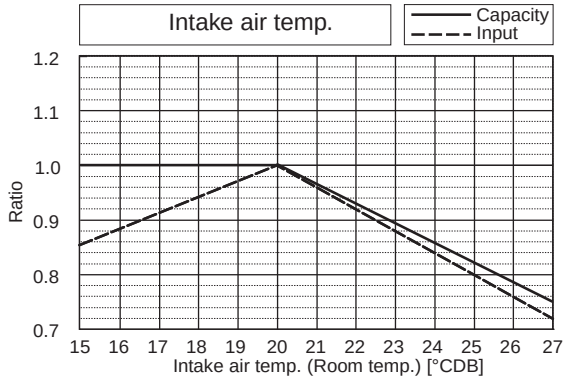

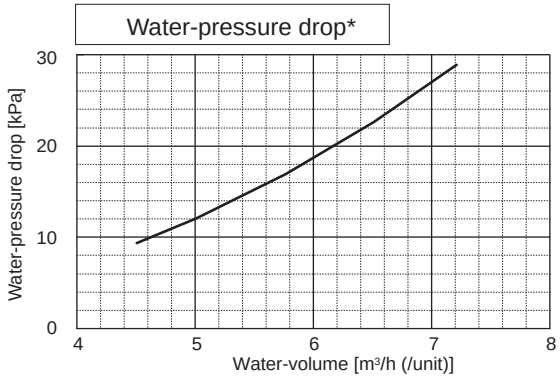

*The drawing indicates characteristic per unit.

		PQHY-P500YSHM-A	PQRY-P500YSHM-A
Nominal Cooling Capacity	kW	56.0	56.0
	BTU/h	191,100	191,100
Input	kW	11.45	11.57

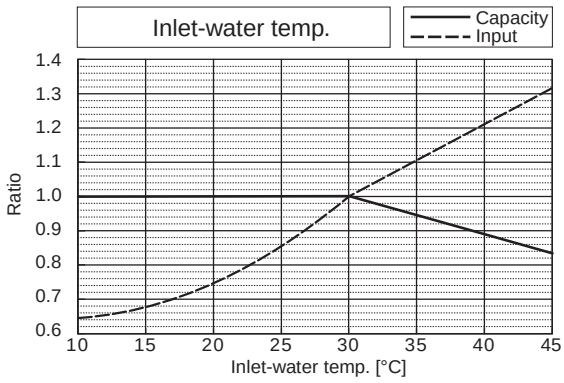

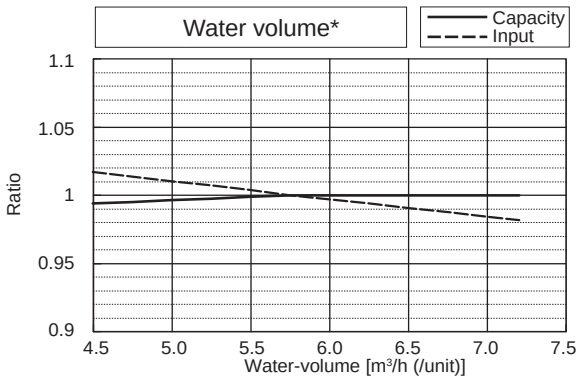

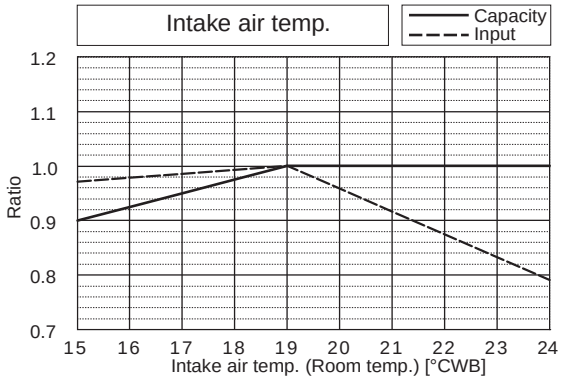

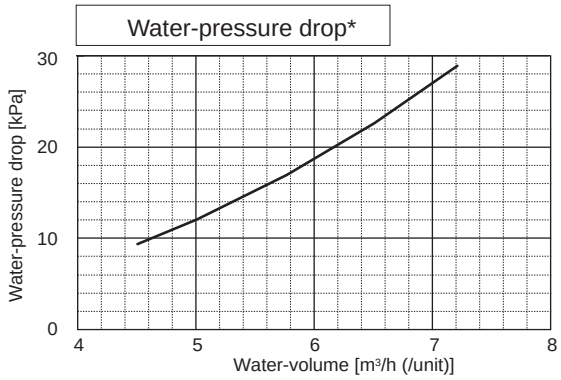

*The drawing indicates characteristic per unit.

		PQHY-P500YSHM-A	PQRY-P500YSHM-A
Nominal Heating Capacity	kW	63.0	63.0
	BTU/h	215,000	215,000
Input	kW	12.06	12.06

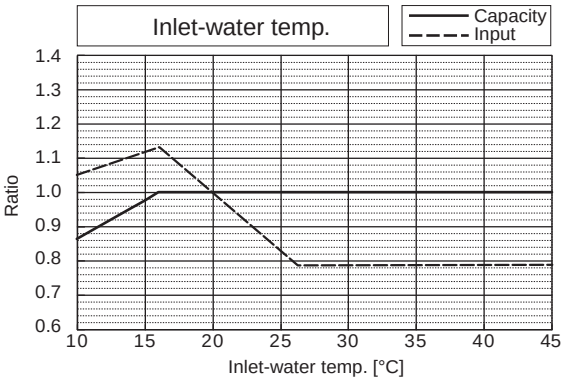

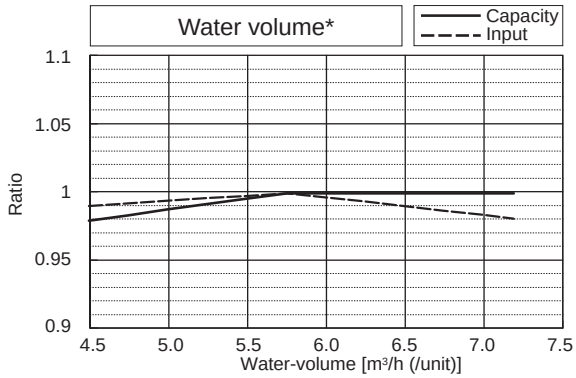

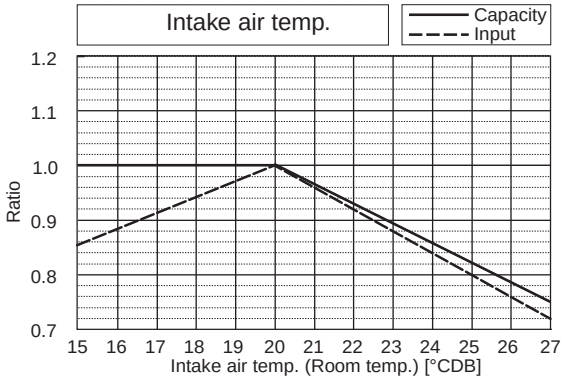

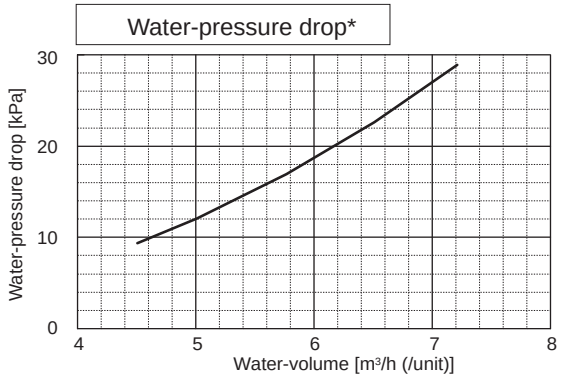

*The drawing indicates characteristic per unit.

WY

		PQHY-P550YSHM-A	PQRY-P550YSHM-A
Nominal Cooling Capacity	kW	63.0	63.0
	BTU/h	215,000	215,000
Input	kW	13.46	13.60

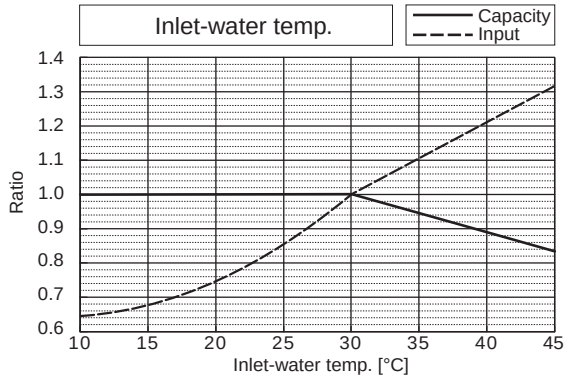

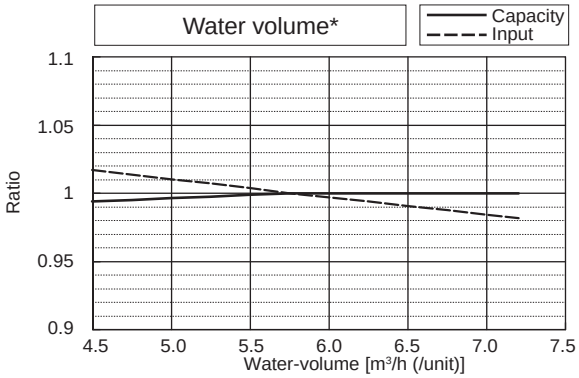

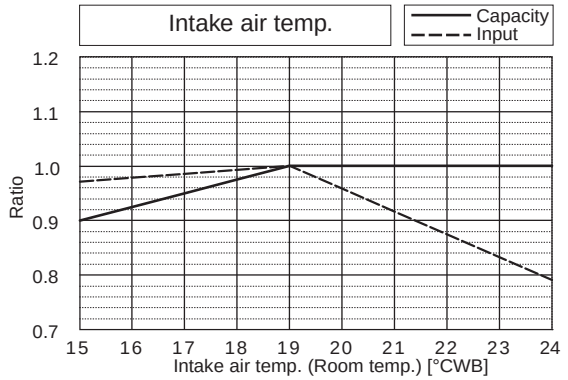

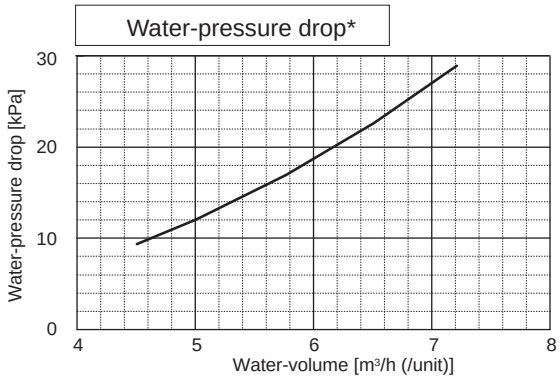

*The drawing indicates characteristic per unit.

WY

		PQHY-P550YSHM-A	PQRY-P550YSHM-A
Nominal Heating Capacity	kW	69.0	69.0
	BTU/h	235,400	235,400
Input	kW	14.65	14.65

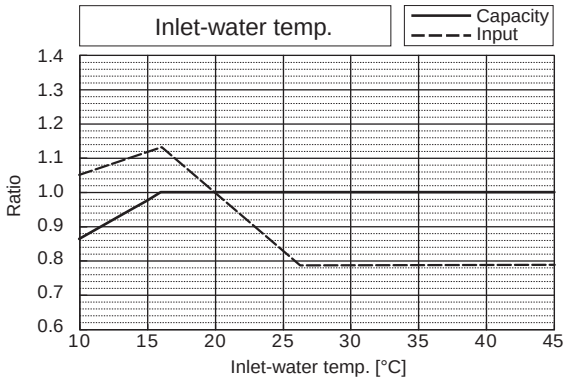

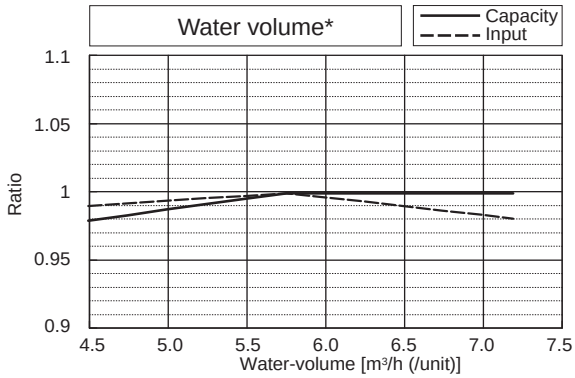

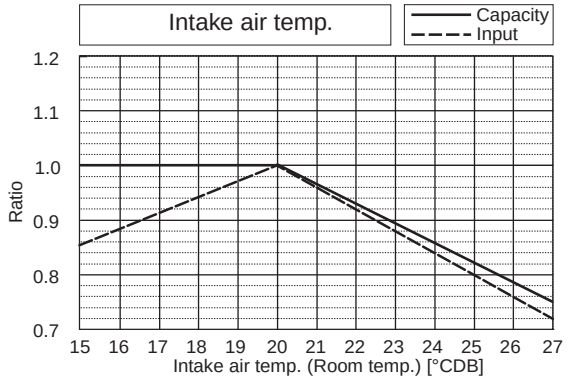

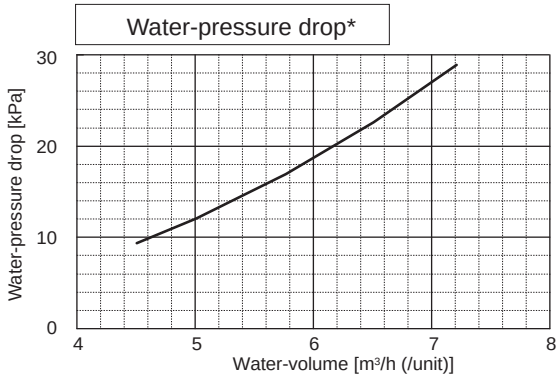

*The drawing indicates characteristic per unit.

		PQHY-P600YSHM-A	PQRY-P600YSHM-A
Nominal Cooling Capacity	kW	69.0	69.0
	BTU/h	235,400	235,400
Input	kW	15.48	15.62

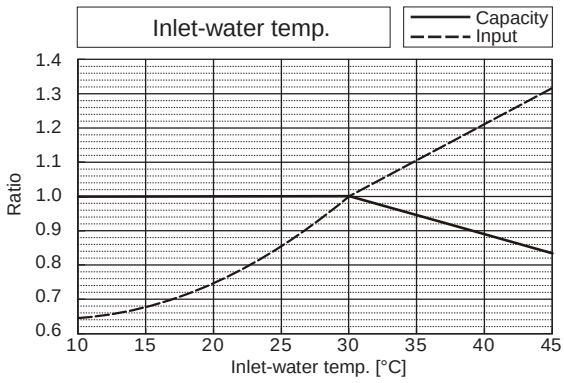

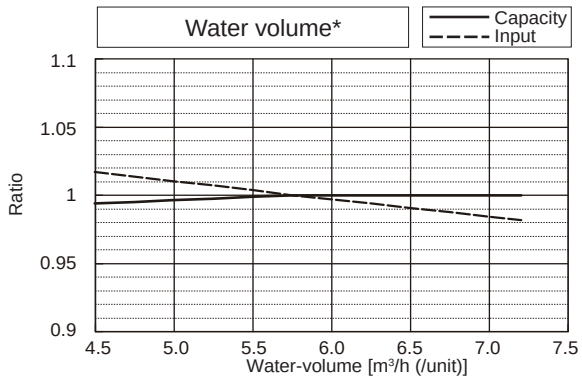

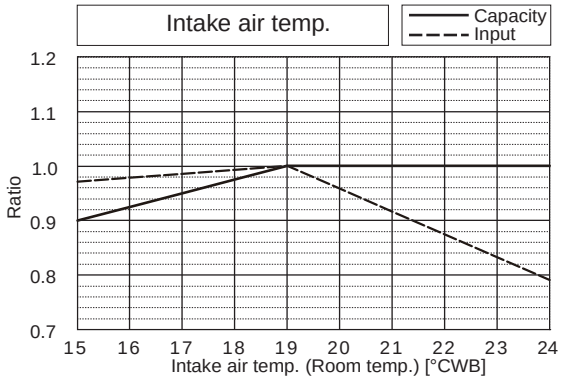

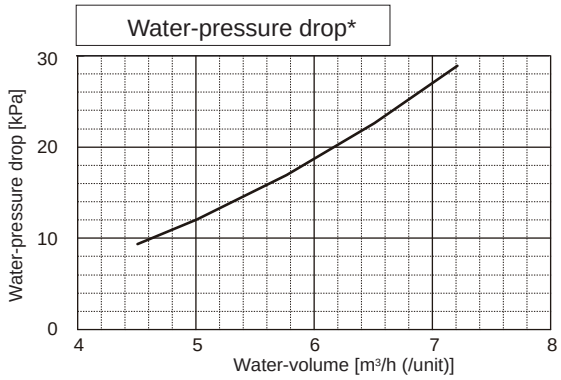

*The drawing indicates characteristic per unit.

		PQHY-P600YSHM-A	PQRY-P600YSHM-A
Nominal Heating Capacity	kW	76.5	76.5
	BTU/h	261,000	261,000
Input	kW	17.12	17.12

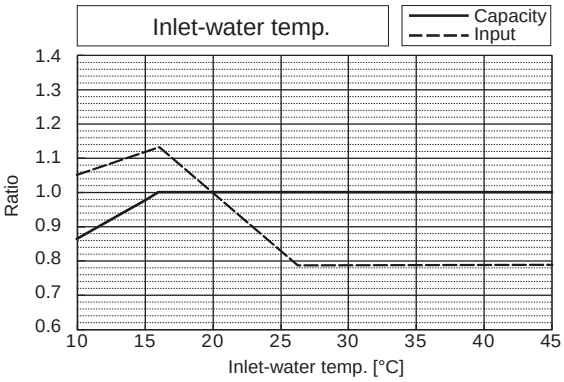

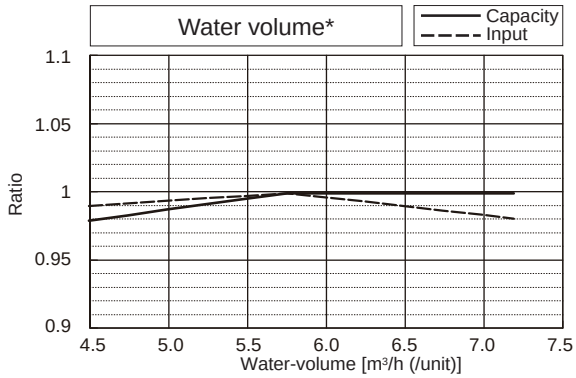

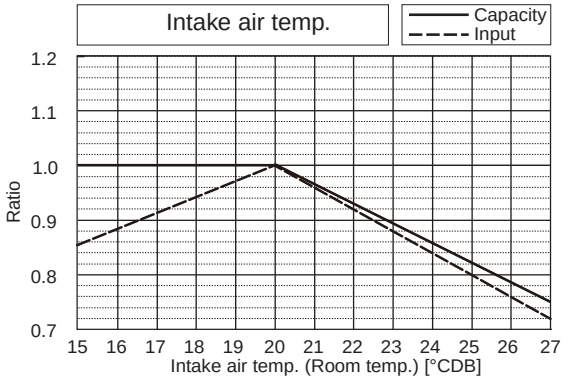

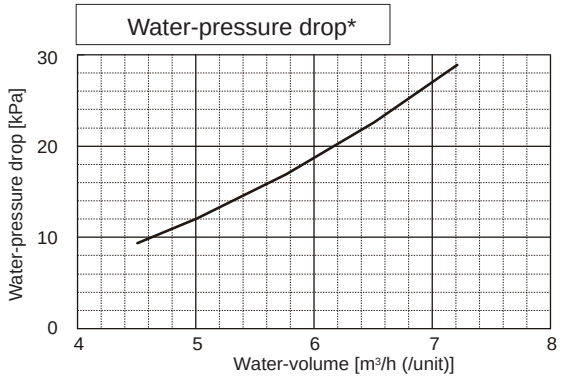

*The drawing indicates characteristic per unit.

WY

		PQHY-P650YSHM-A
Nominal Cooling Capacity	kW	73.0
	BTU/h	249,100
Input	kW	13.96

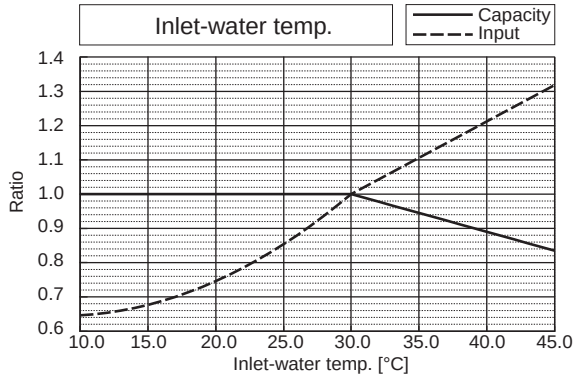

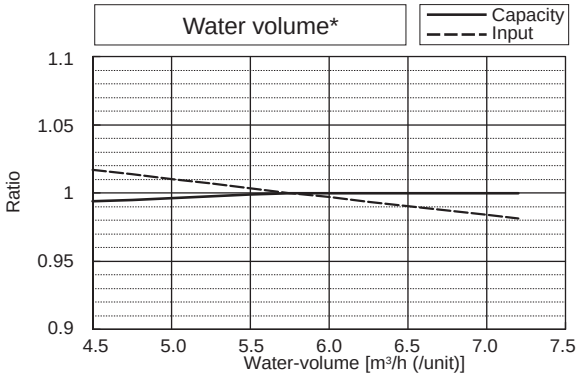

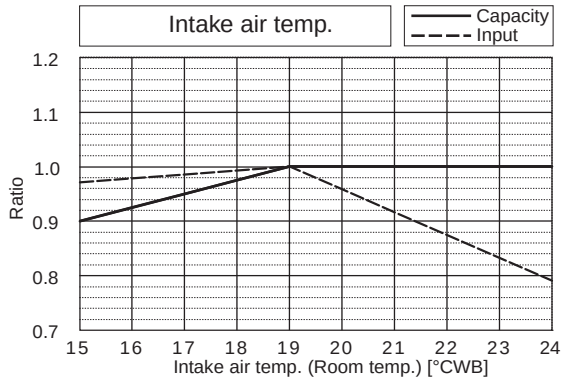

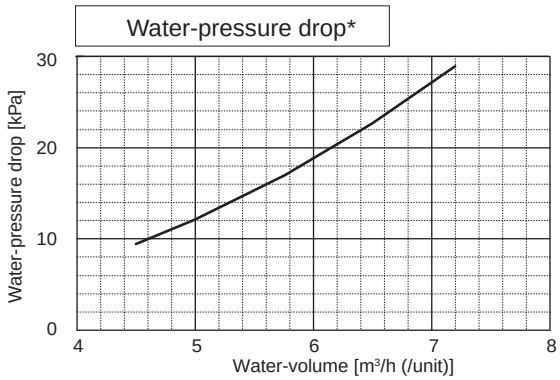

*The drawing indicates characteristic per unit.

WY

		PQHY-P650YSHM-A
Nominal Heating Capacity	kW	81.5
	BTU/h	278,100
Input	kW	14.74

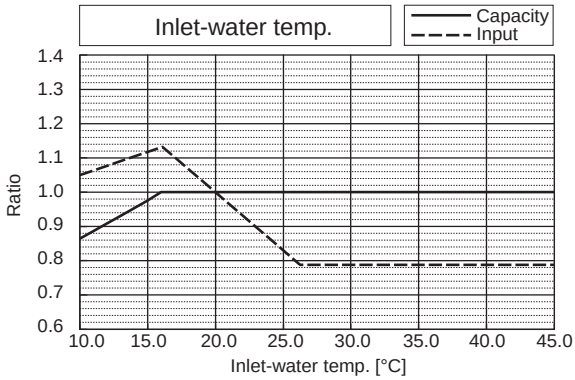

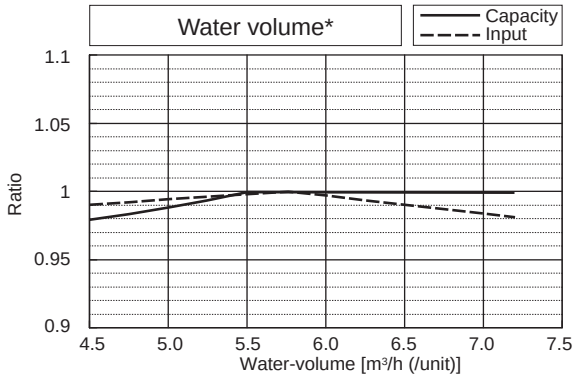

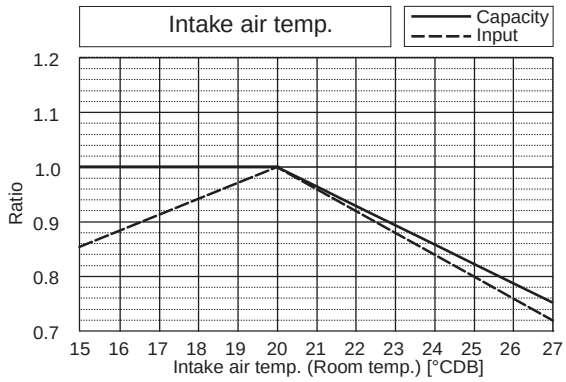

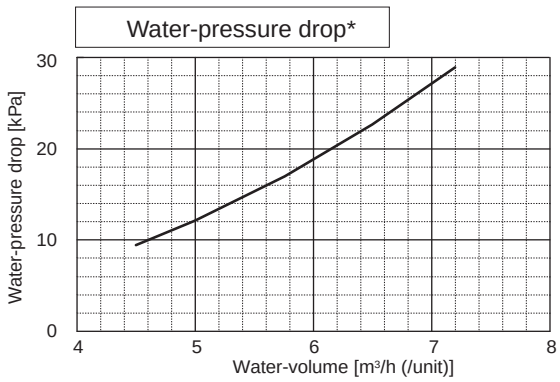

*The drawing indicates characteristic per unit.

		PQHY-P700YSHM-A
Nominal Cooling Capacity	kW	80.0
	BTU/h	273,000
Input	kW	15.58

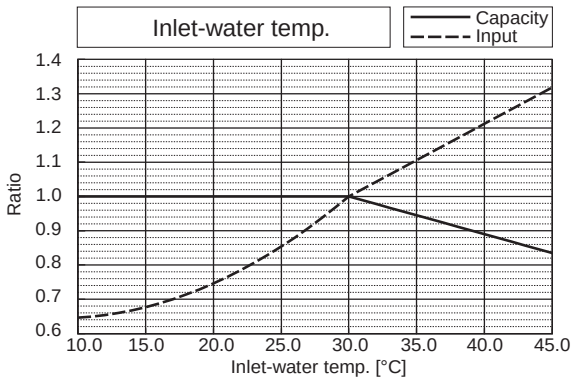

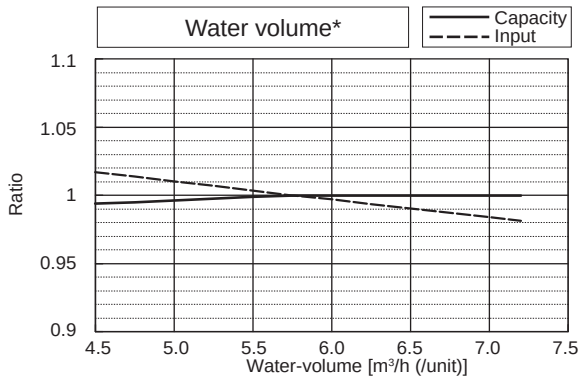

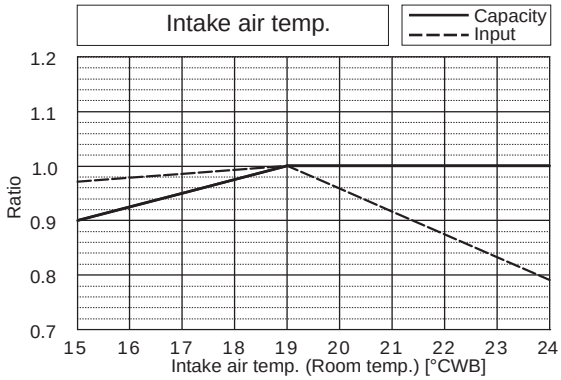

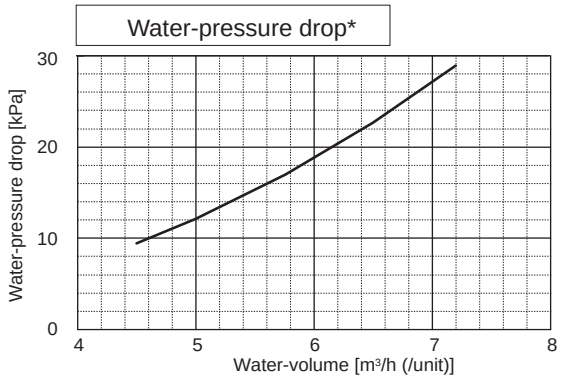

*The drawing indicates characteristic per unit.

		PQHY-P700YSHM-A
Nominal Heating Capacity	kW	88.0
	BTU/h	300,300
Input	kW	16.51

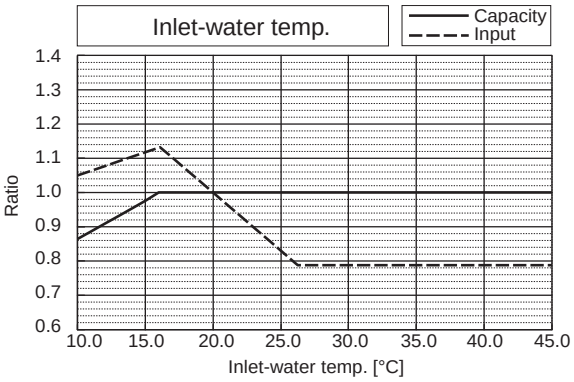

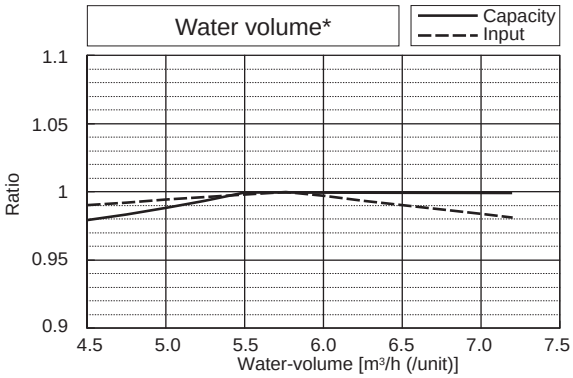

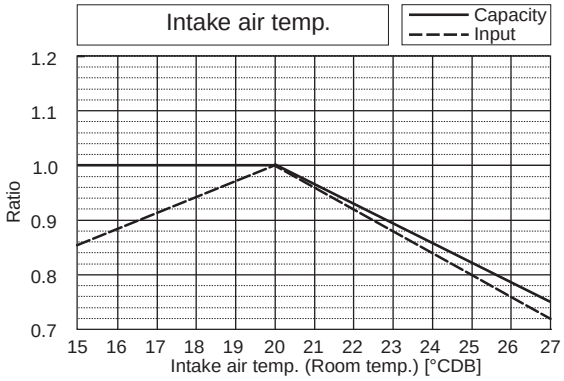

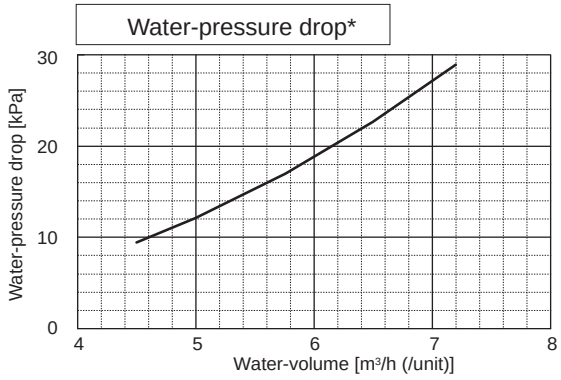

*The drawing indicates characteristic per unit.

WY

		PQHY-P750YSHM-A
Nominal Cooling Capacity	kW	85.0
	BTU/h	290,000
Input	kW	17.19

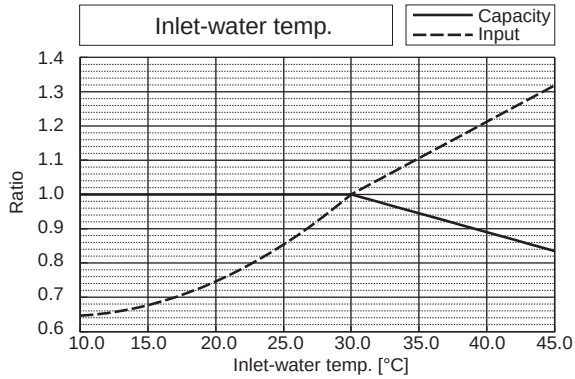

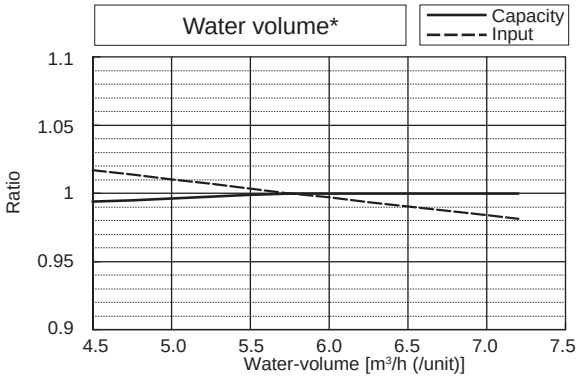

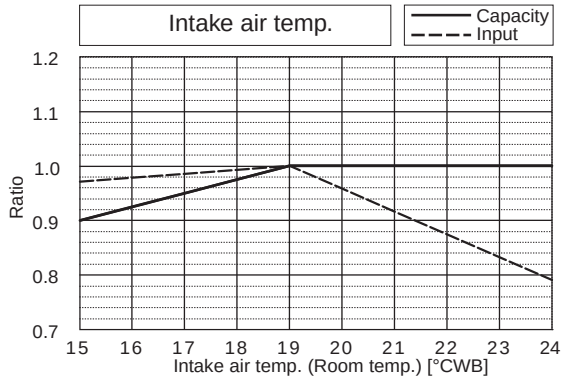

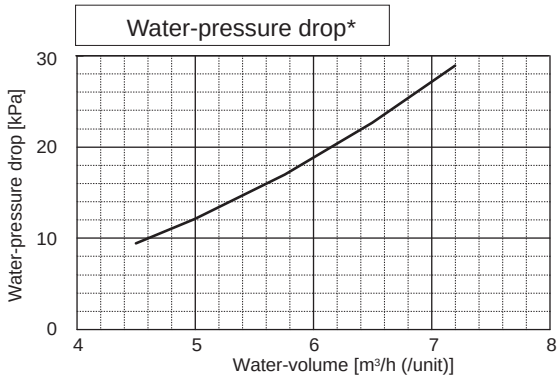

*The drawing indicates characteristic per unit.

WY

		PQHY-P750YSHM-A
Nominal Heating Capacity	kW	95.0
	BTU/h	324,100
Input	kW	18.27

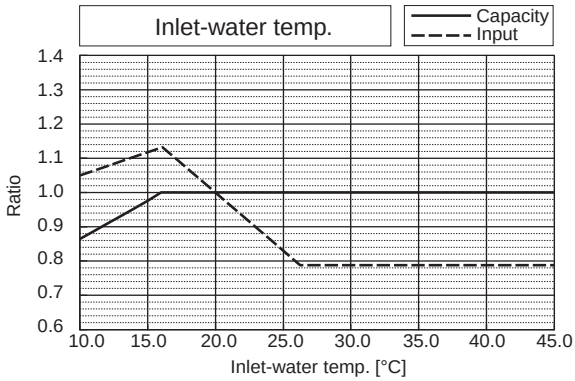

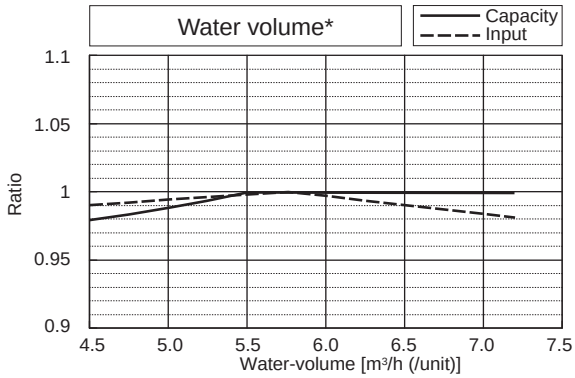

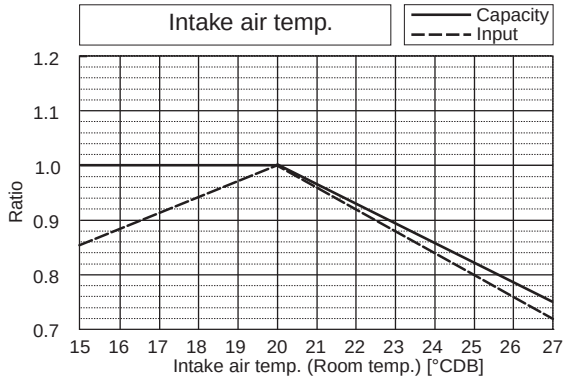

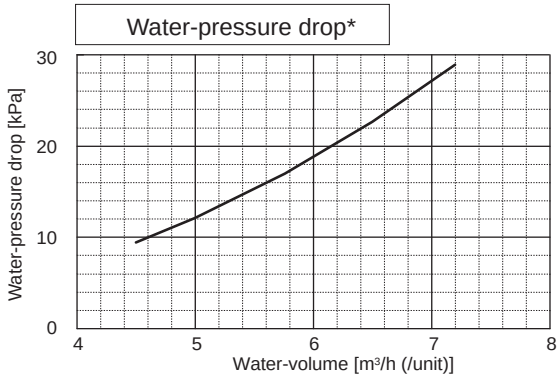

*The drawing indicates characteristic per unit.

6. CAPACITY TABLES

		PQHY-P800YSHM-A
Nominal Cooling Capacity	kW	90.0
	BTU/h	307,100
Input	kW	19.18

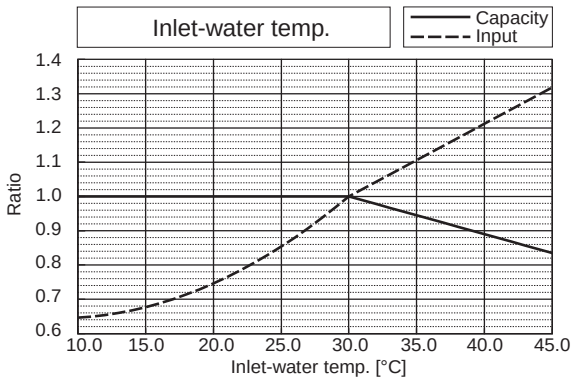

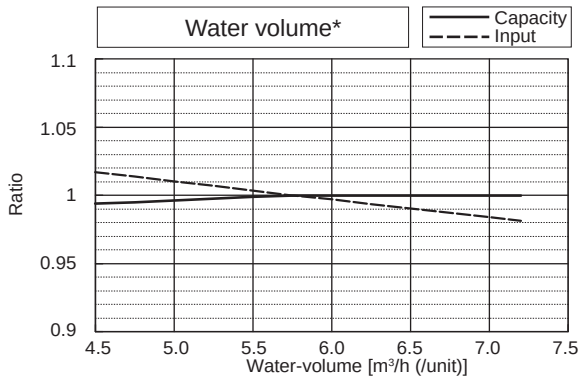

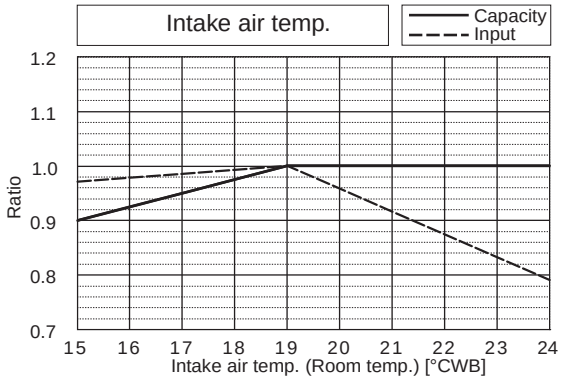

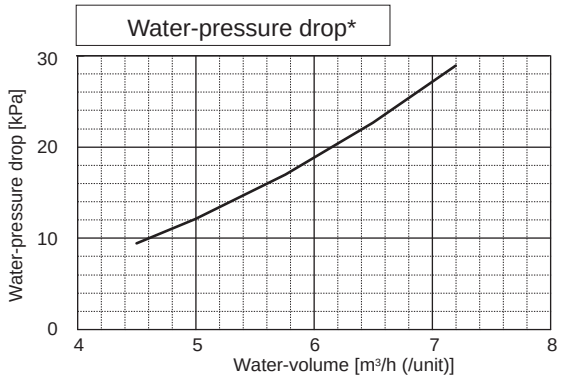

*The drawing indicates characteristic per unit.

		PQHY-P800YSHM-A
Nominal Heating Capacity	kW	100.0
	BTU/h	341,200
Input	kW	20.74

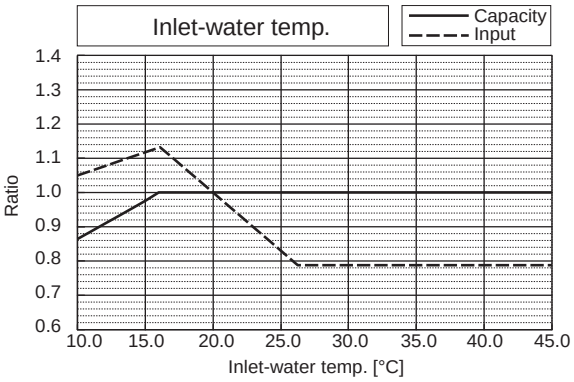

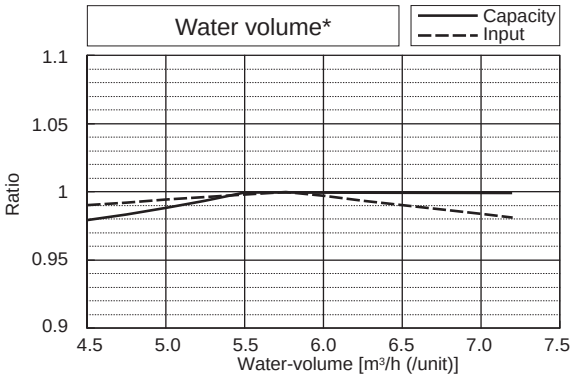

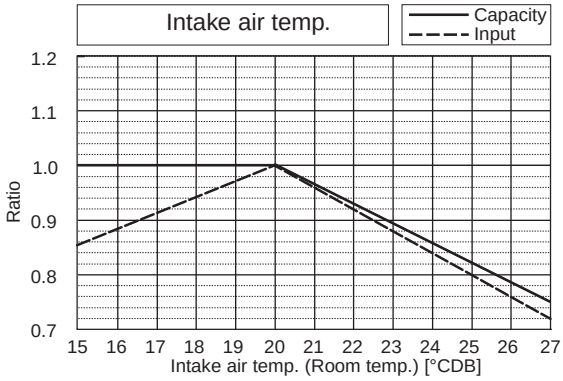

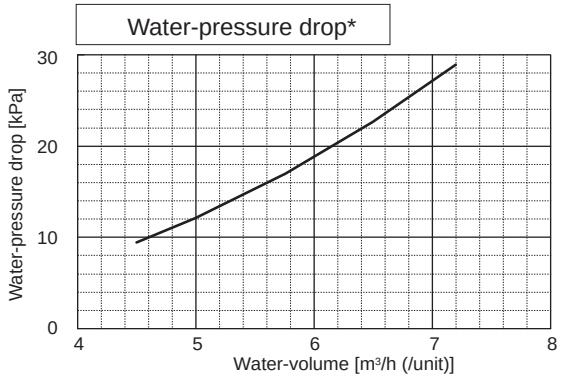

*The drawing indicates characteristic per unit.

WY

		PQHY-P850YSHM-A
Nominal Cooling Capacity	kW	96.0
	BTU/h	327,600
Input	kW	21.20

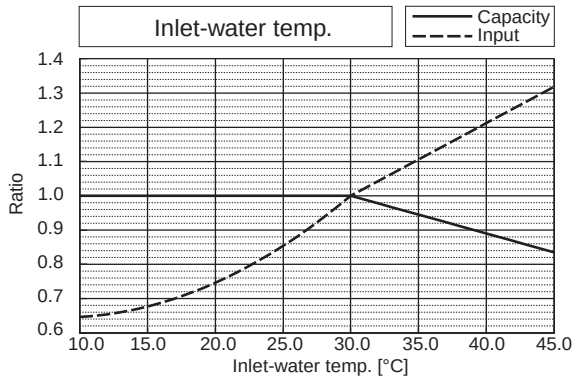

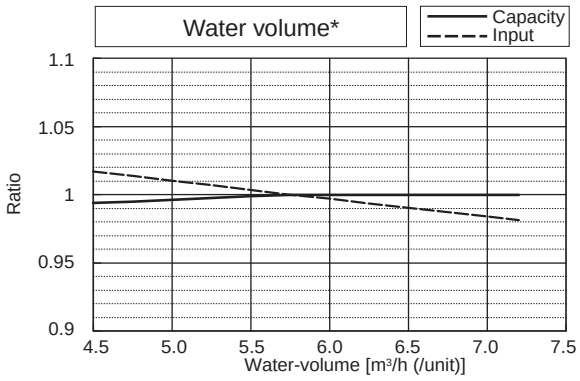

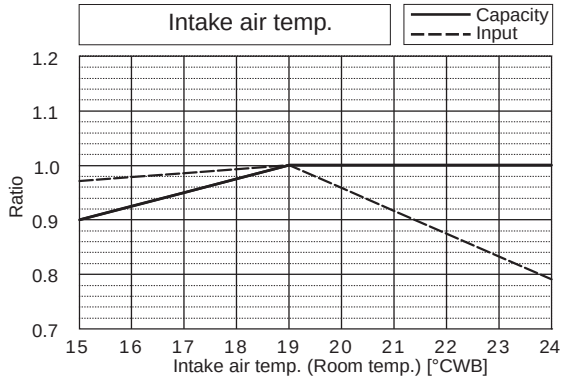

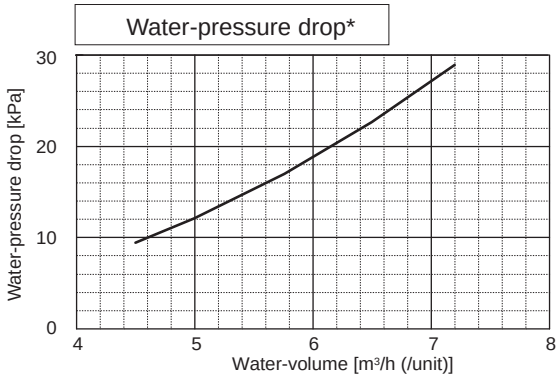

*The drawing indicates characteristic per unit.

WY

		PQHY-P850YSHM-A
Nominal Heating Capacity	kW	108.0
	BTU/h	368,500
Input	kW	23.21

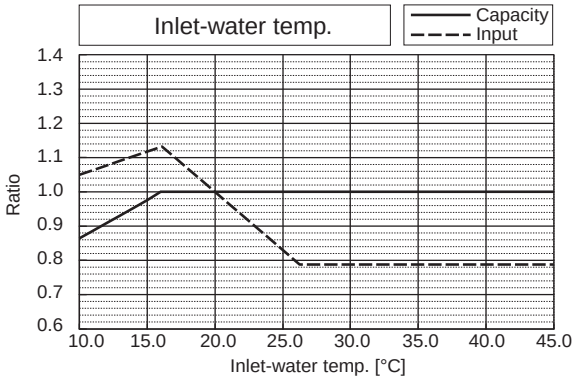

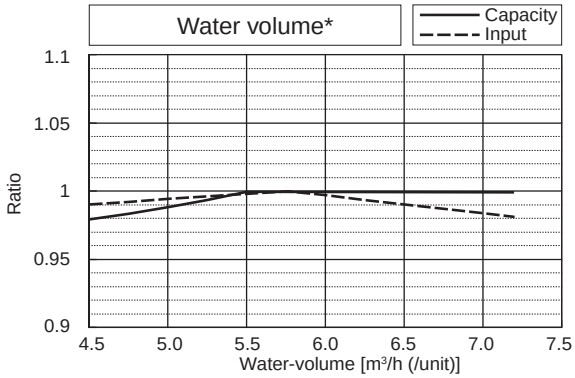

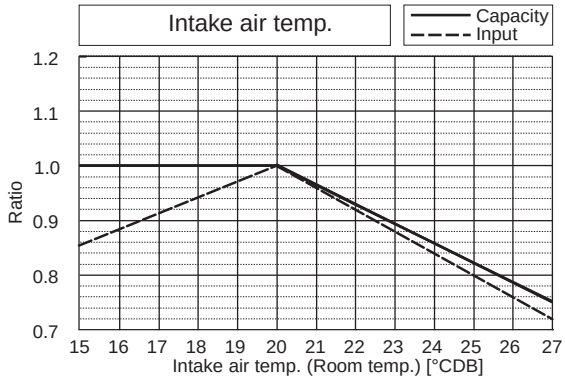

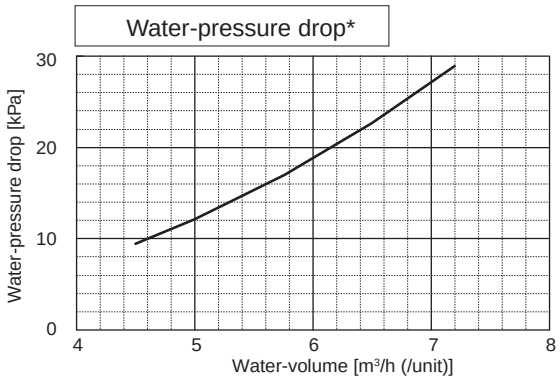

*The drawing indicates characteristic per unit.

		PQHY-P900YSHM-A
Nominal Cooling Capacity	kW	101.0
	BTU/h	344,600
Input	kW	23.22

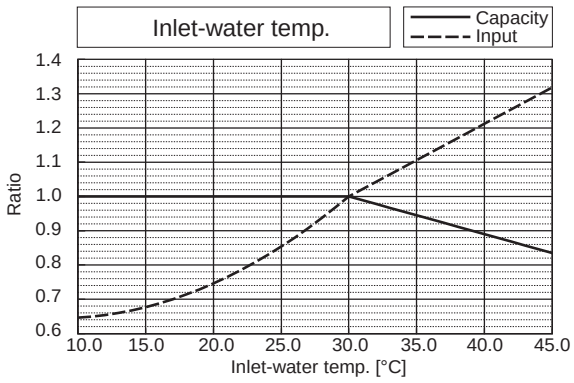

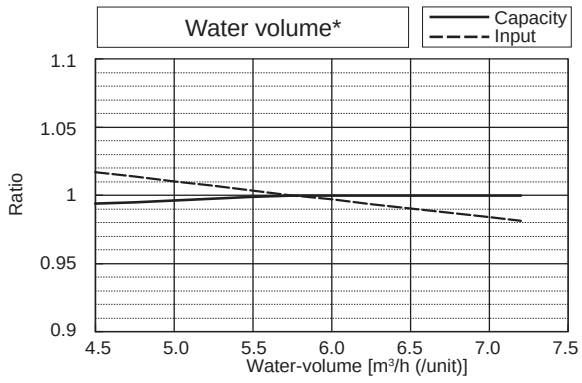

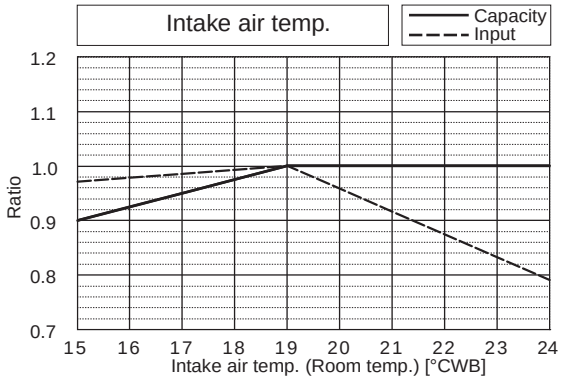

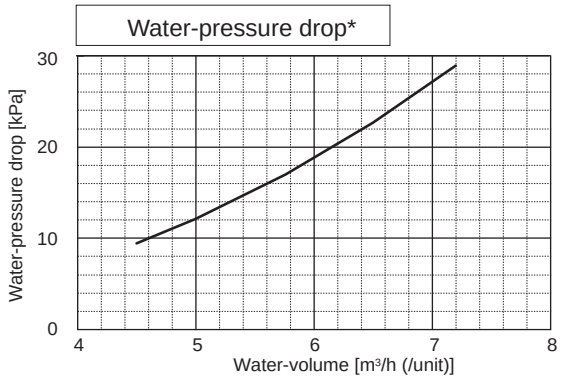

*The drawing indicates characteristic per unit.

		PQHY-P900YSHM-A
Nominal Heating Capacity	kW	113.0
	BTU/h	385,600
Input	kW	25.67

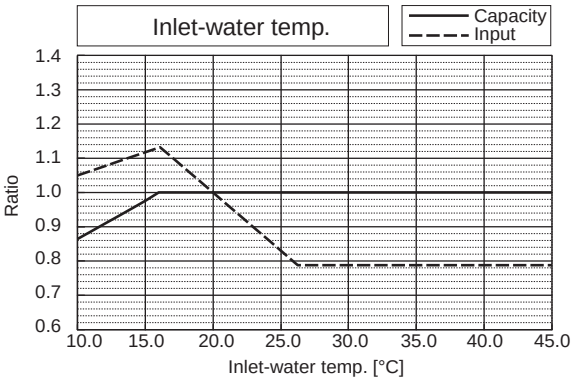

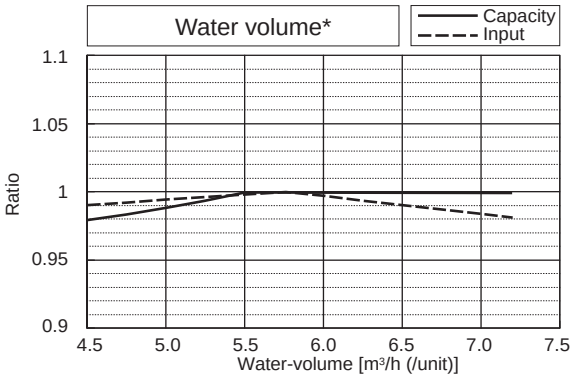

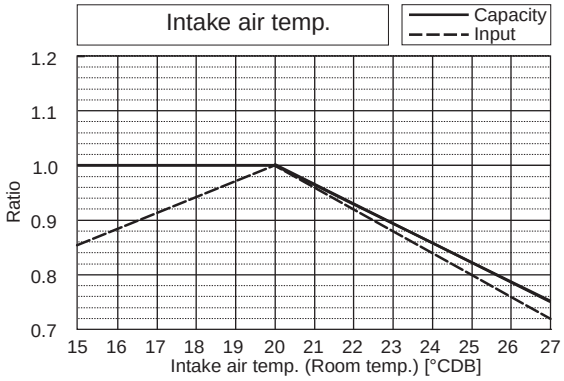

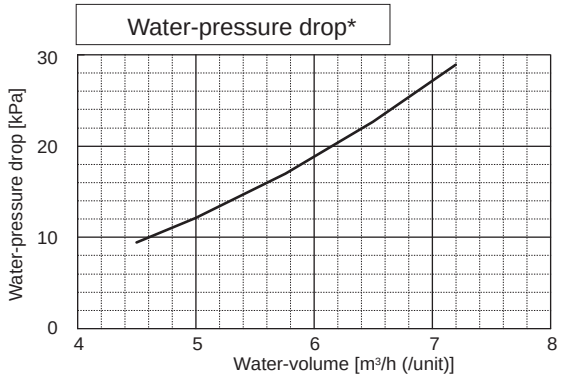

*The drawing indicates characteristic per unit.

WY

6-2. Correction by total indoor

CITY MULTI system have different capacities and inputs when many combinations of indoor units with different total capacities are connected. Using following tables, the maximum capacity can be found to ensure the system is installed with enough capacity for a particular application.

PQHY-P200YHM-A

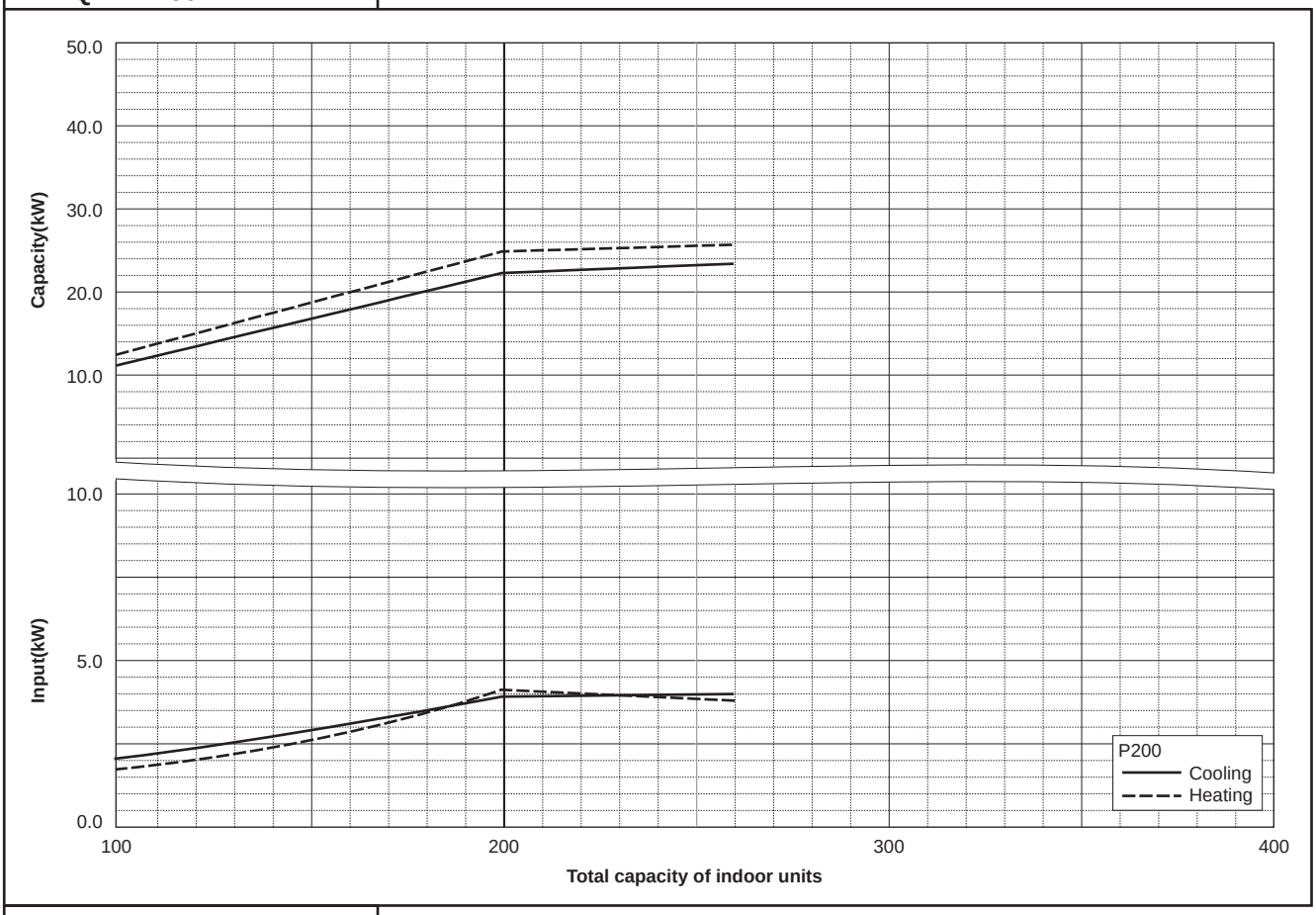

PQHY-P250YHM-A

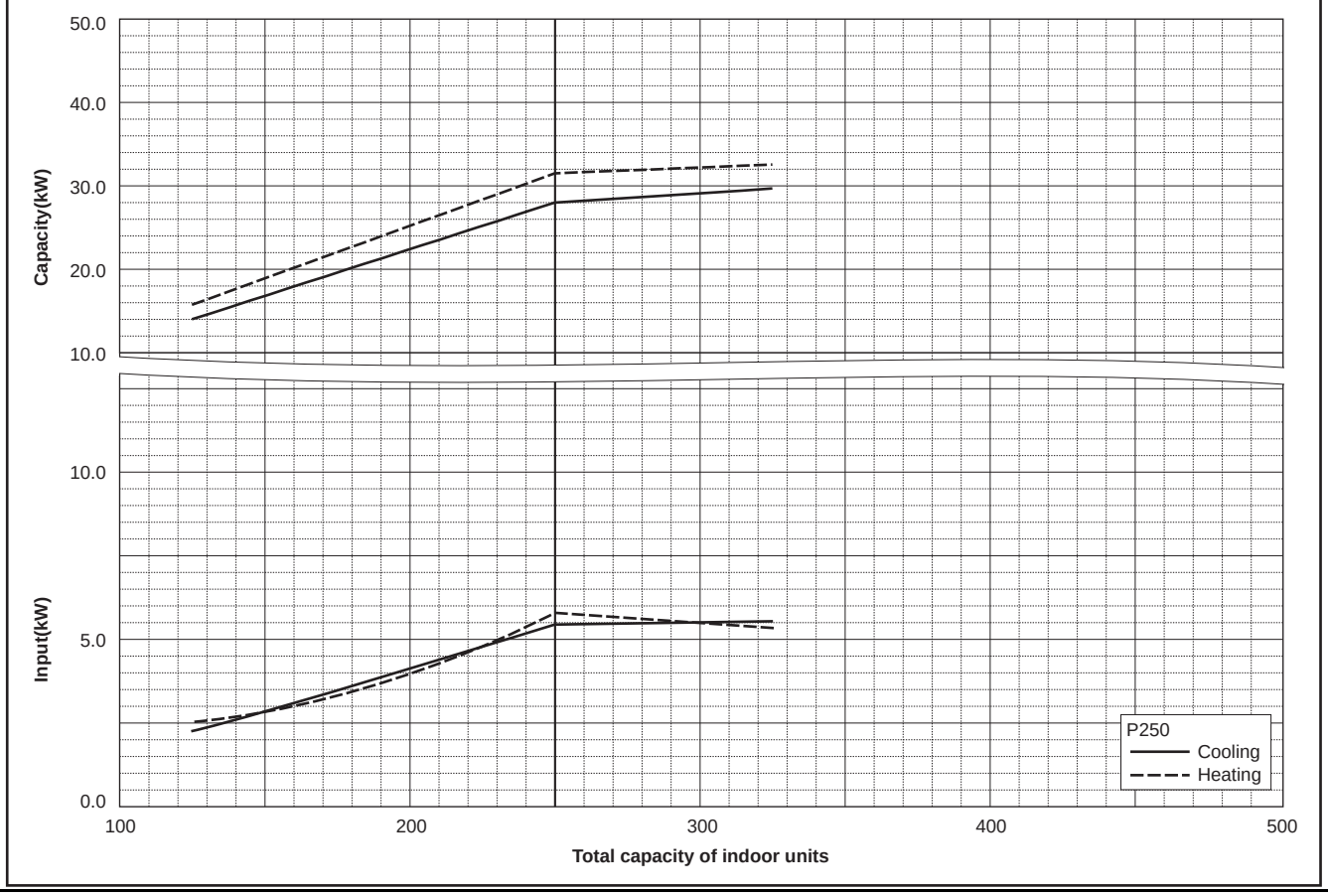

WY

PQHY-P300YHM-A

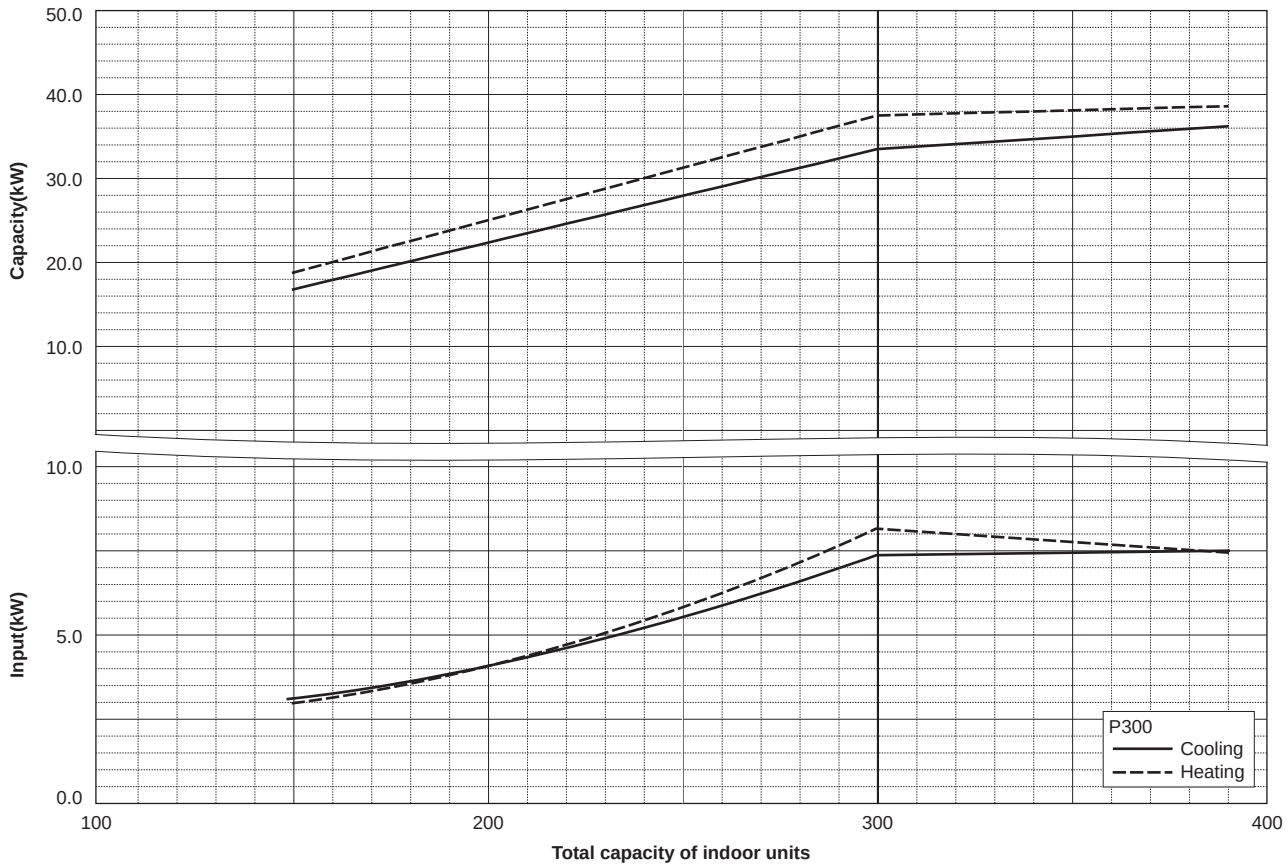

PQHY-P400YSHM-A

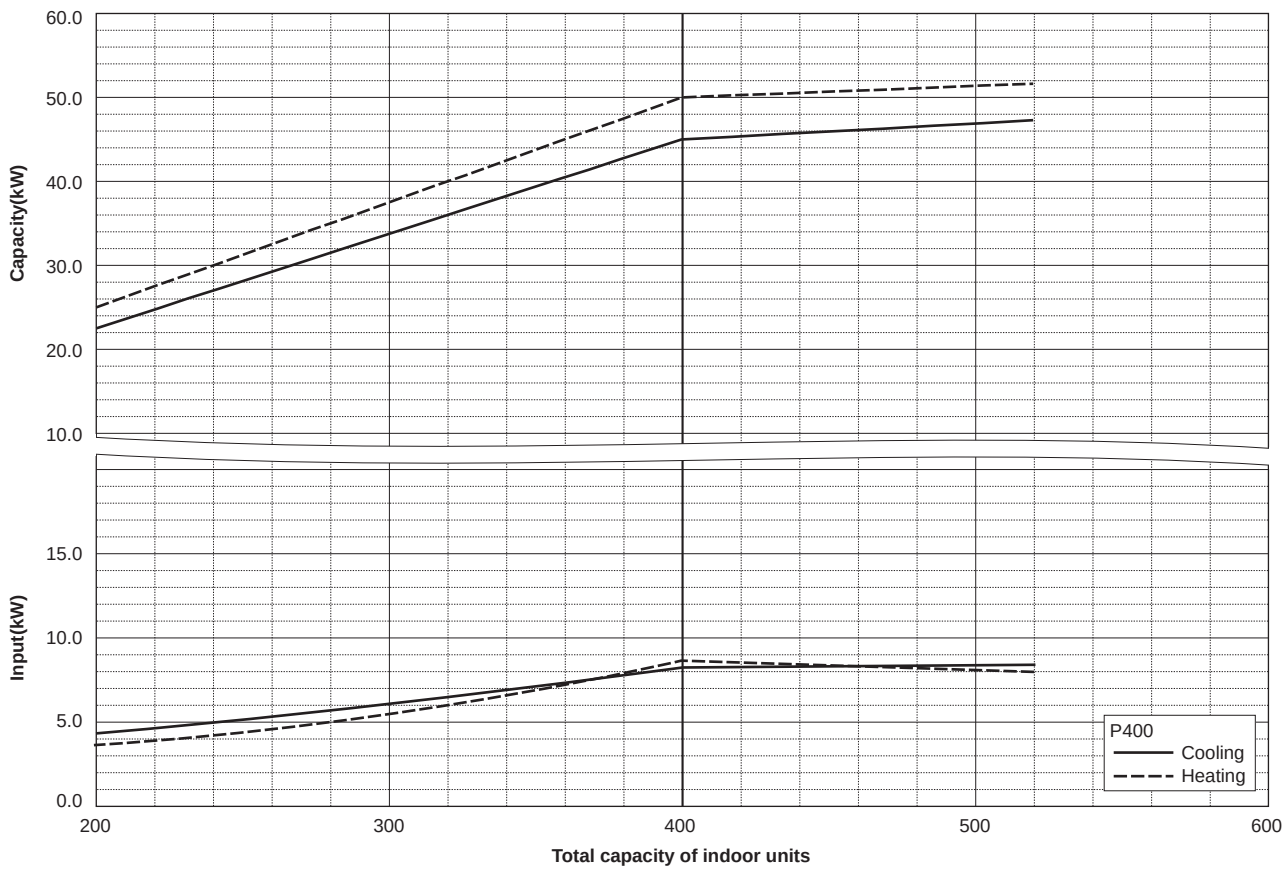

WY

PQHY-P450YSHM-A

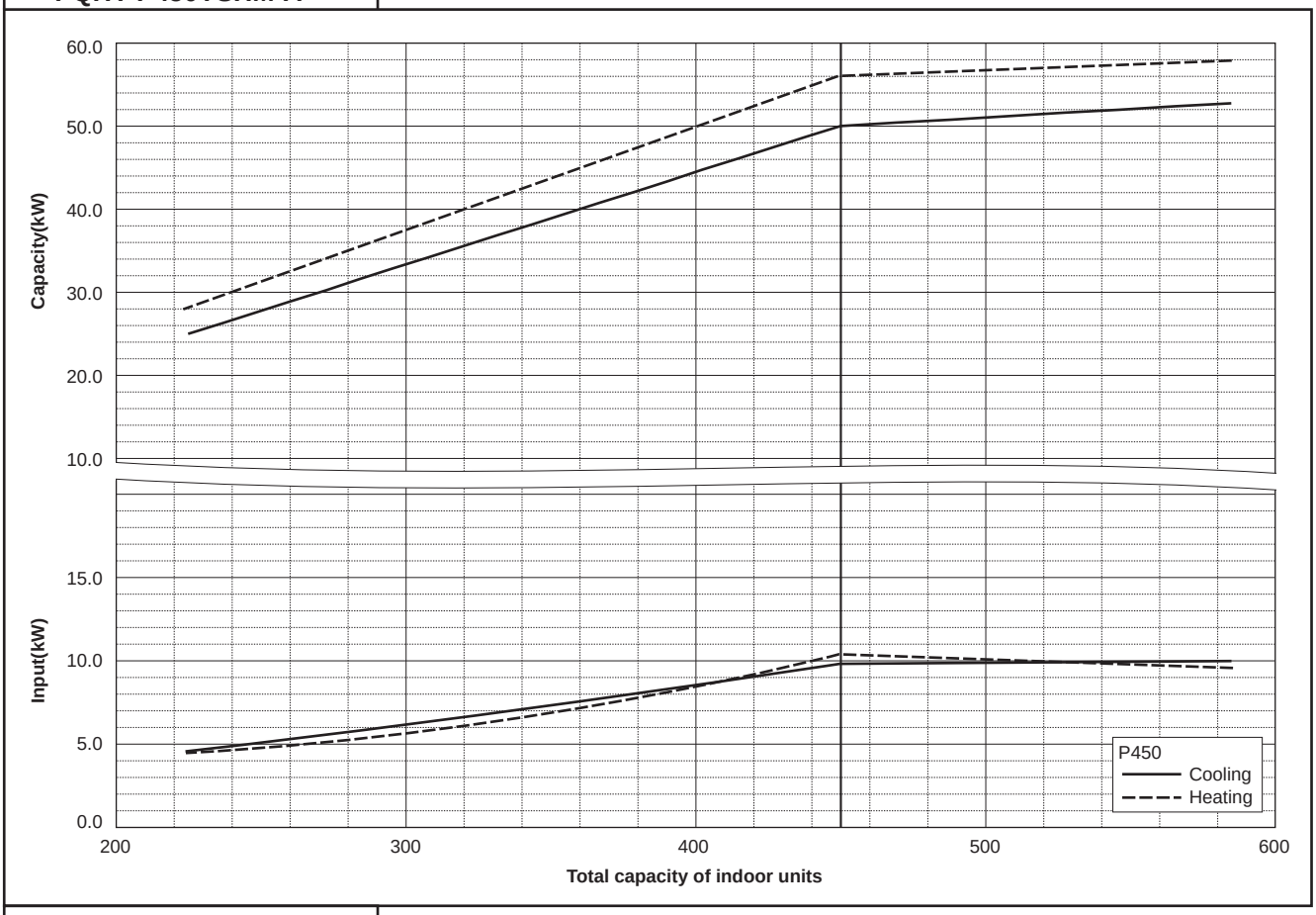

PQHY-P500YSHM-A

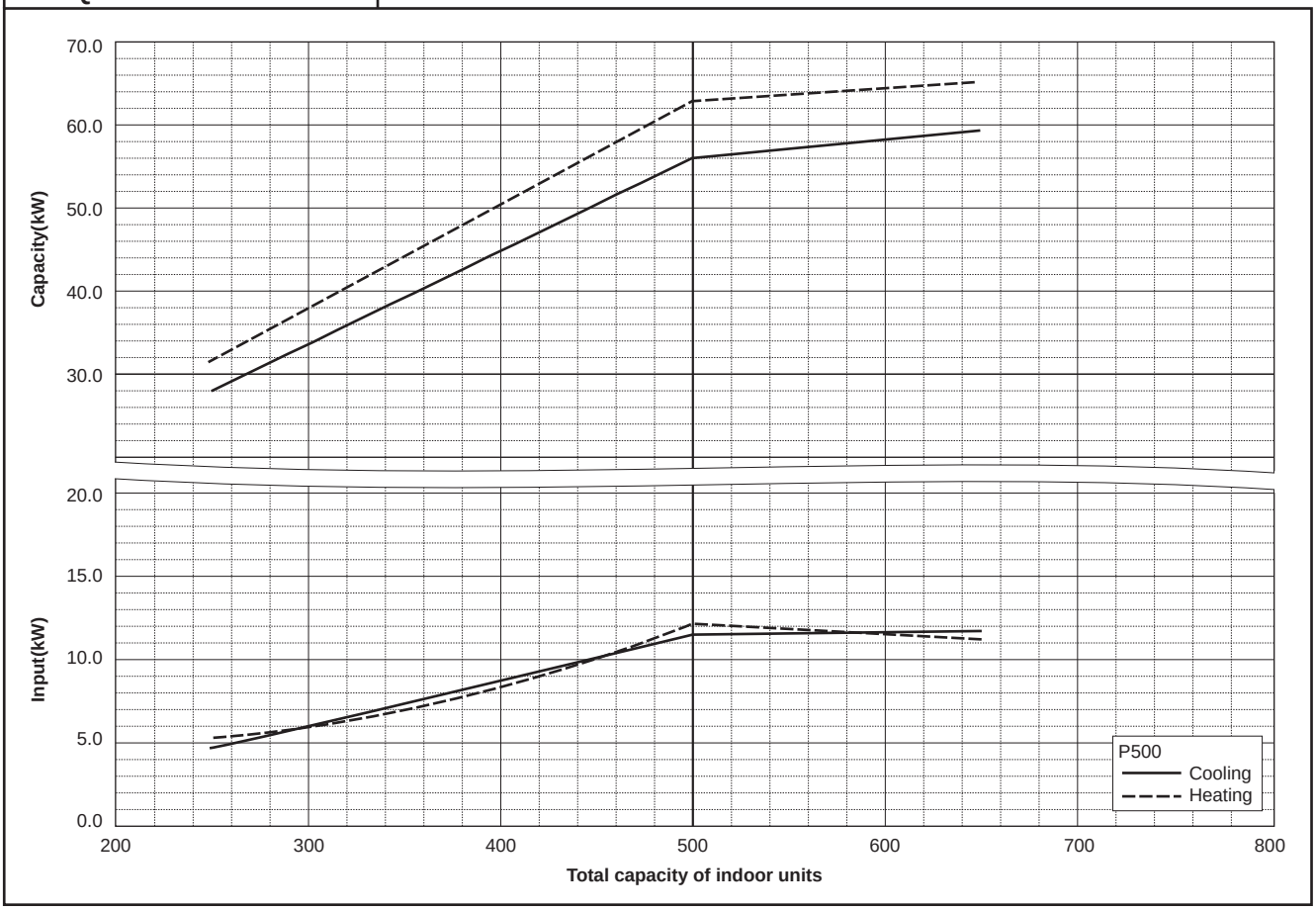

WY

PQHY-P550YSHM-A

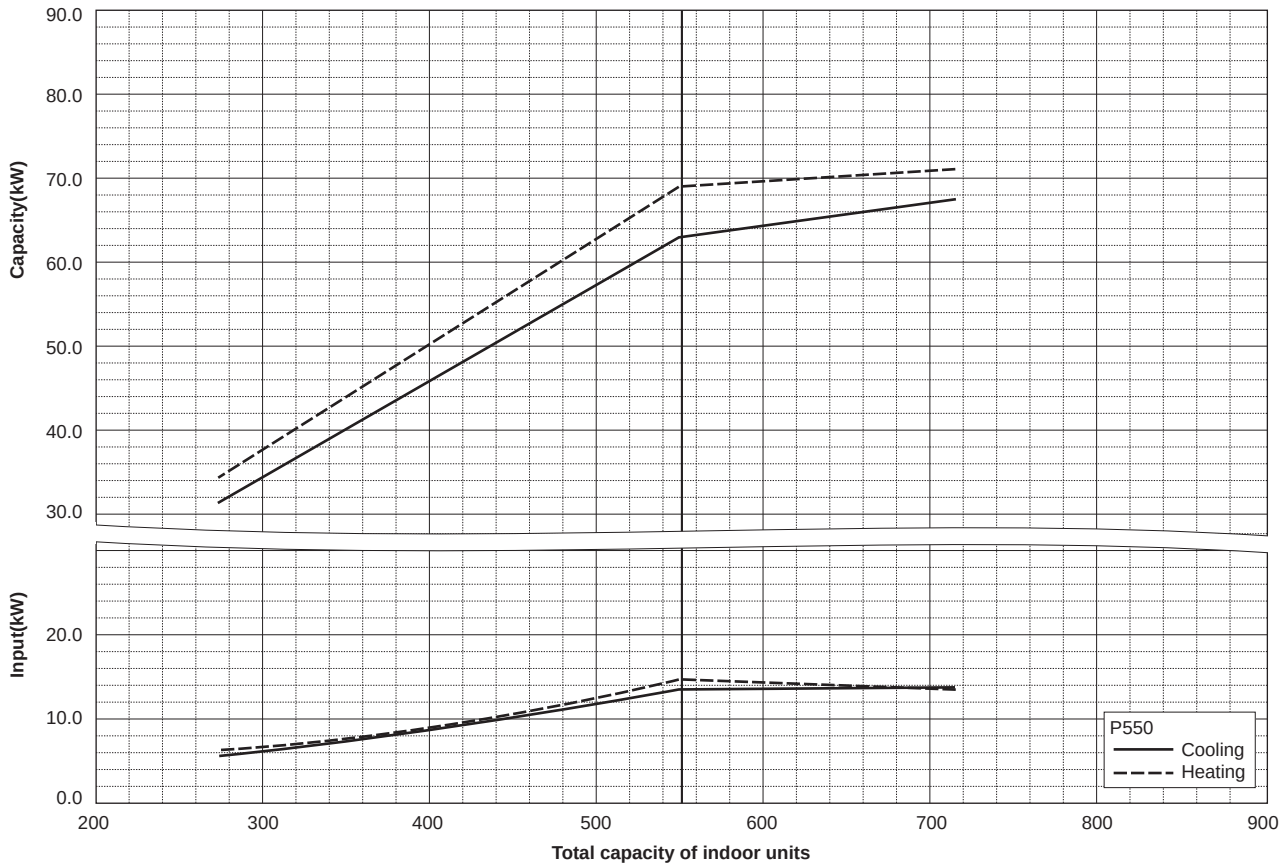

PQHY-P600YSHM-A

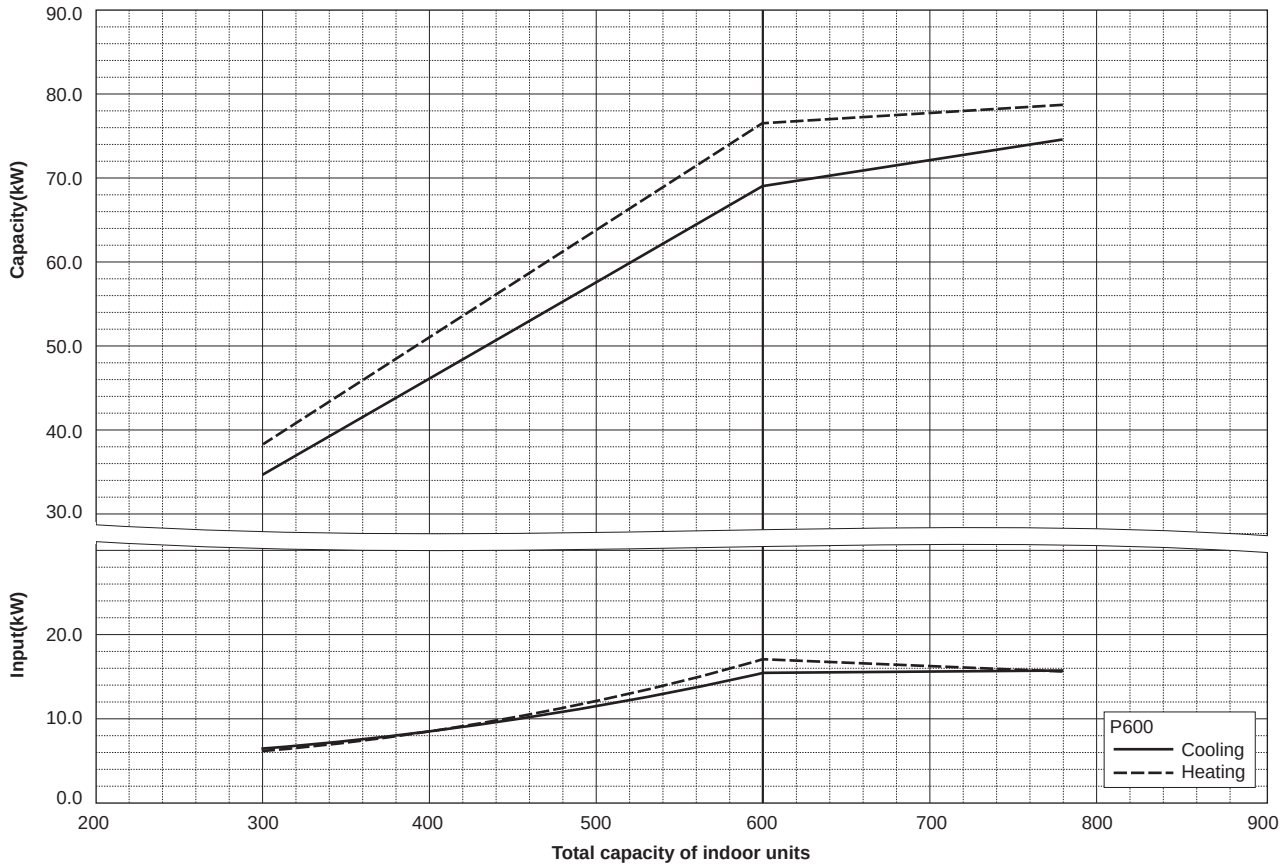

WY

PQHY-P650YSHM-A

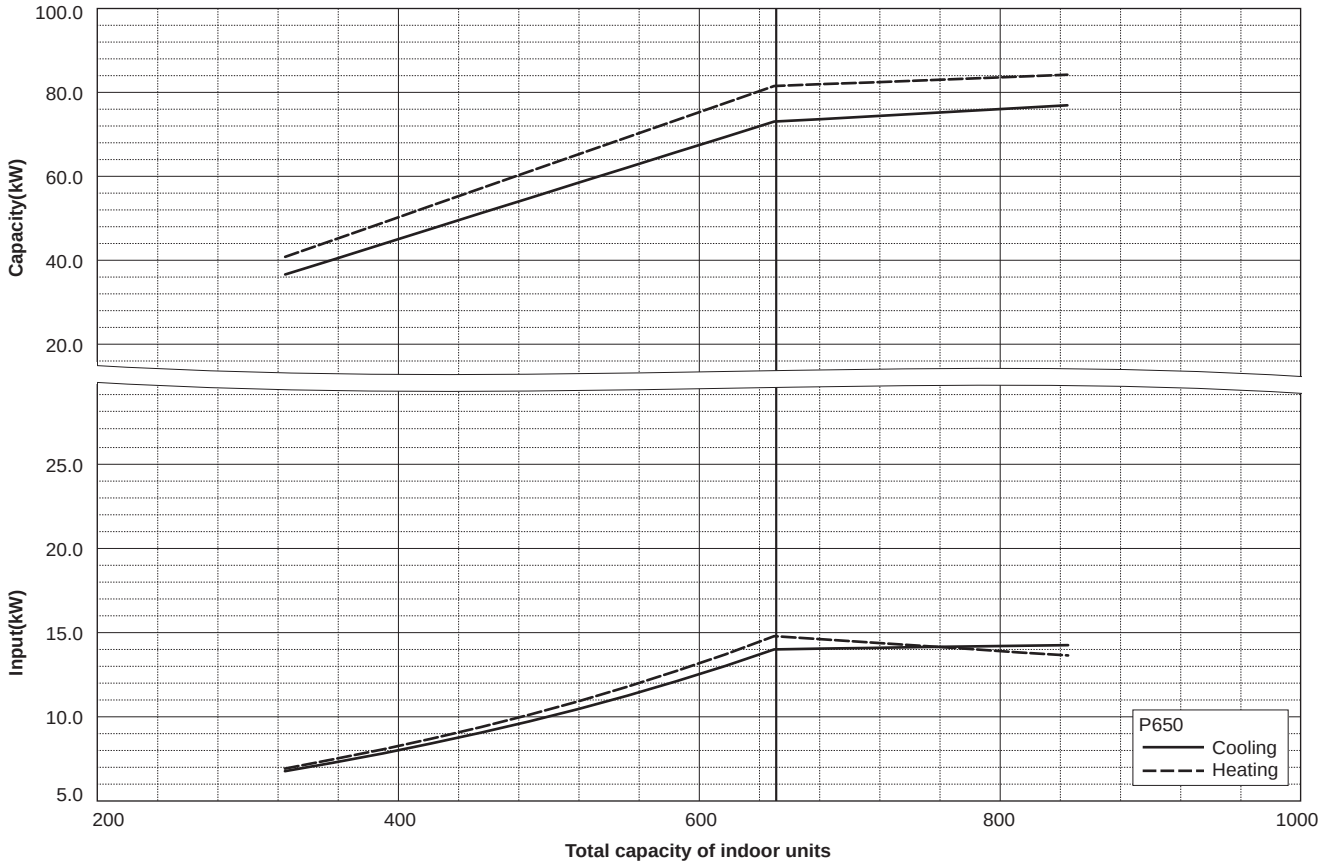

PQHY-P700YSHM-A

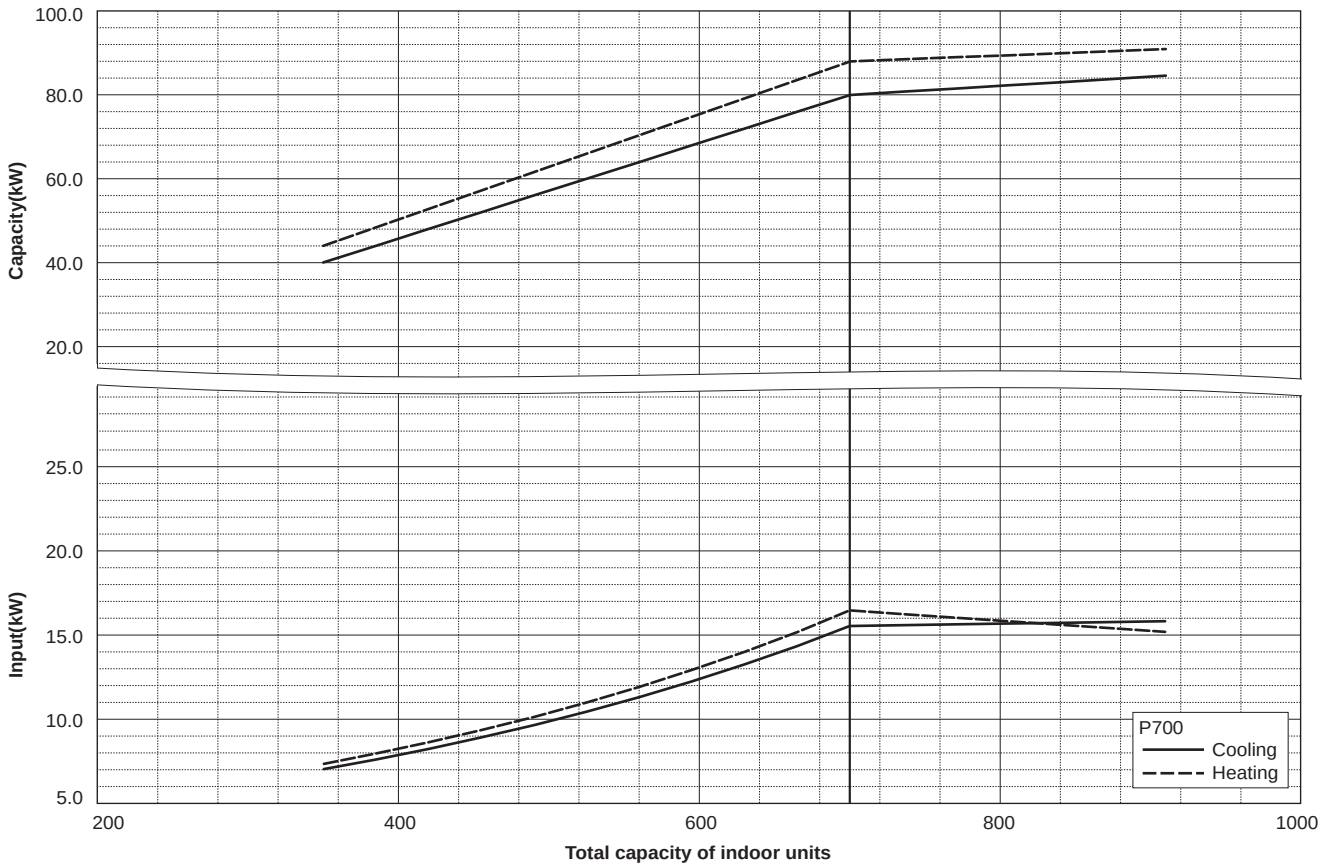

PQHY-P750YSHM-A

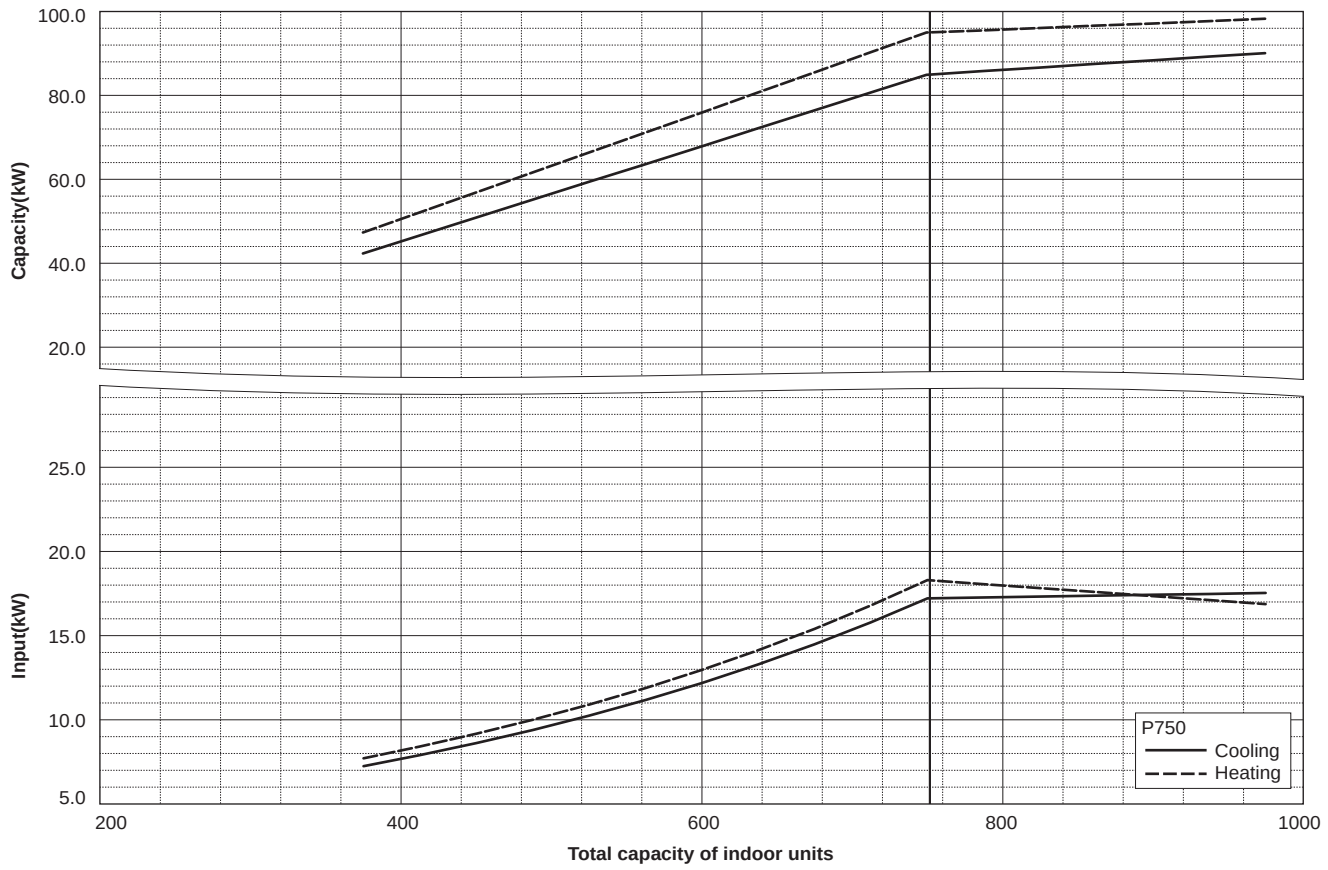

PQHY-P800YSHM-A

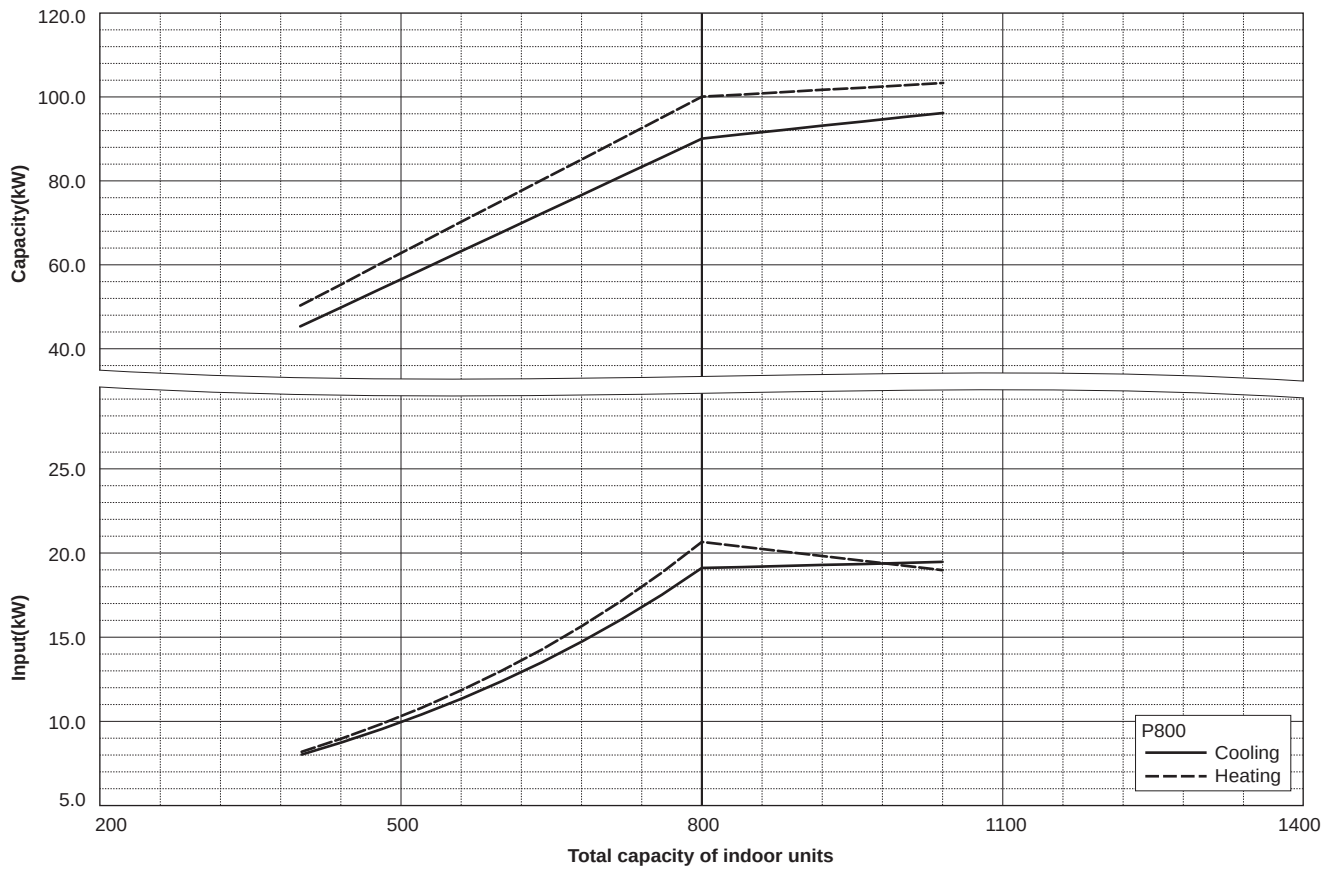

PQHY-P850YSHM-A

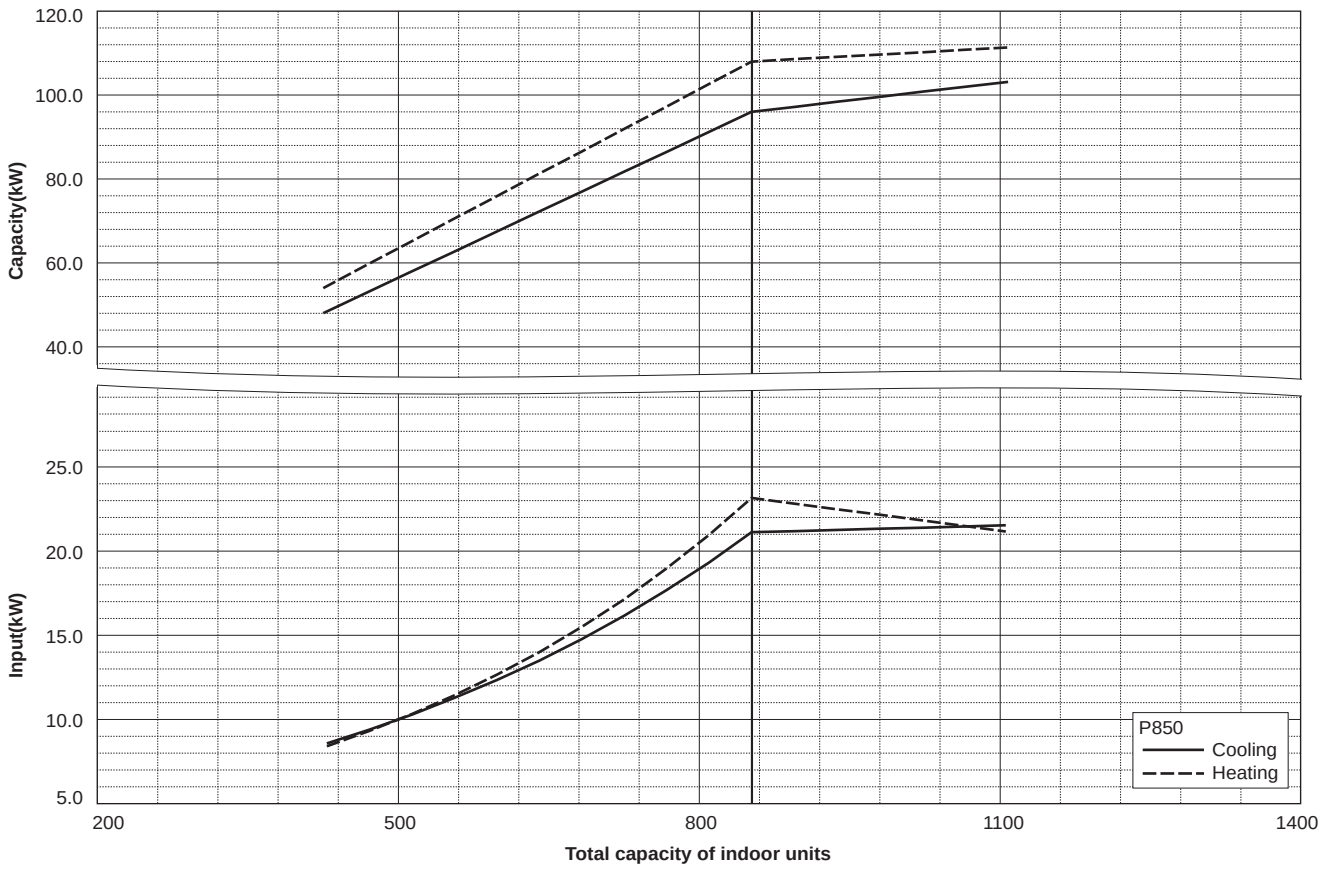

WY

PQHY-P900YSHM-A

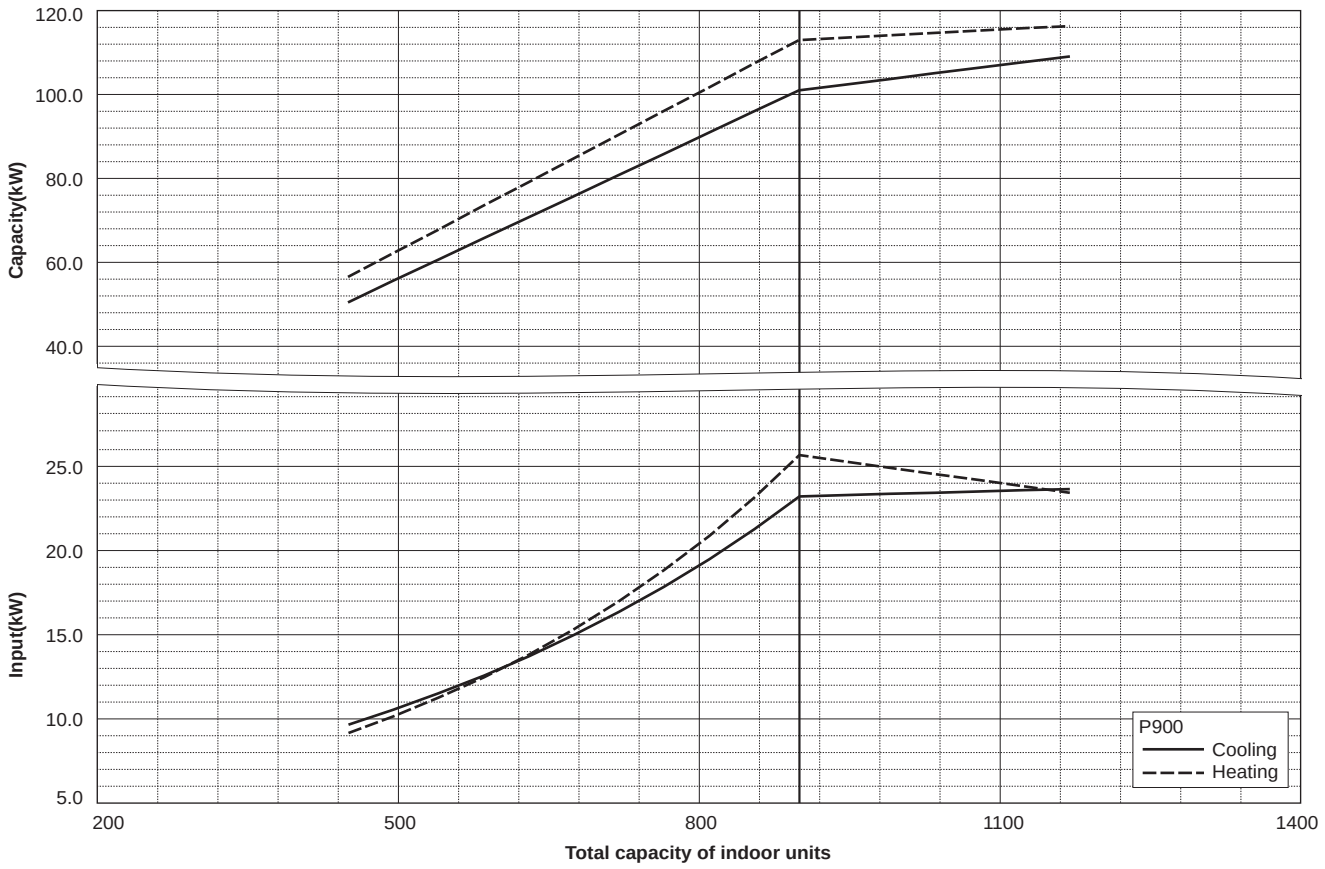

6-3. Correction by refrigerant piping length

CITY MULTI systems can have extended piping lengths if certain limitations are followed, but cooling/heating capacity could be reduced. Using following correction factor by equivalent piping length shown at 6-3-1 and 6-3-2, capacity can be found. 6-3-3 shows how to obtain the equivalent piping length.

6-3-1. Cooling capacity correction

PQHY-P200YHM-A

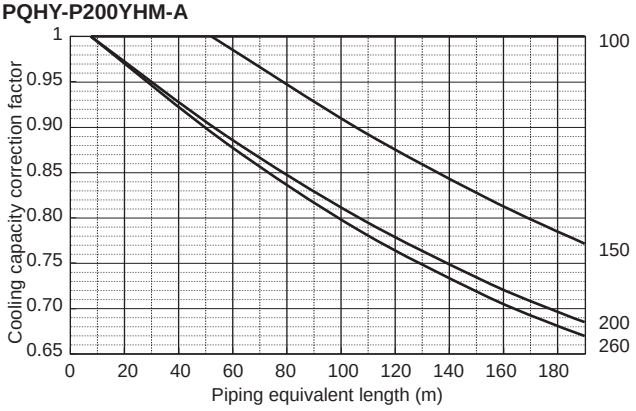

PQHY-P450YSHM-A

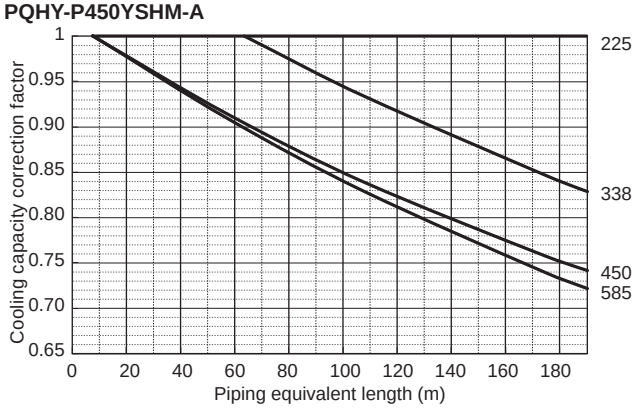

PQHY-P250YHM-A

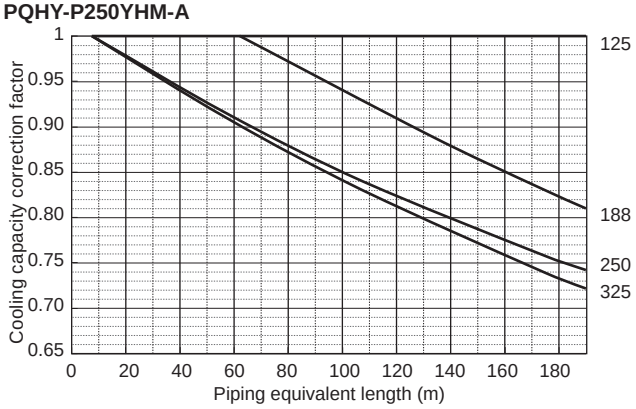

PQHY-P500YSHM-A

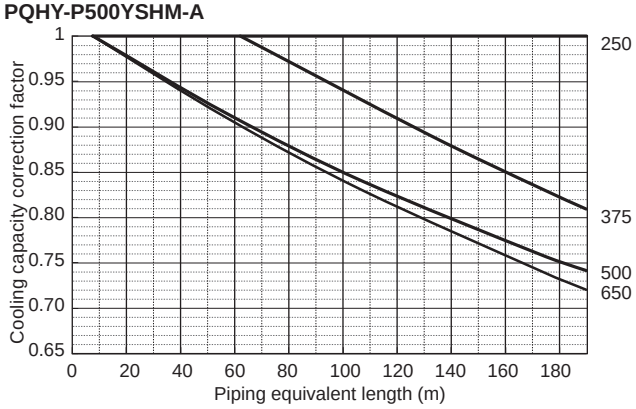

PQHY-P300YHM-A

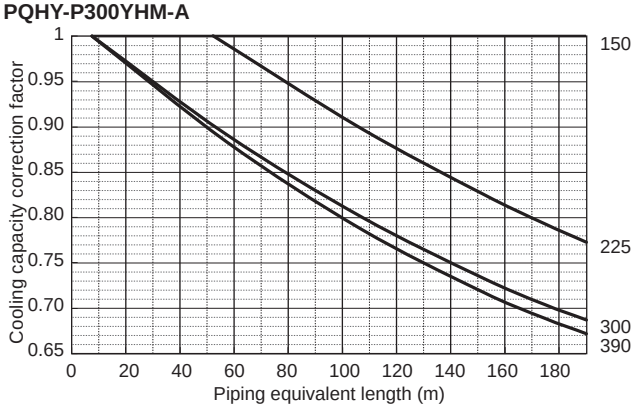

PQHY-P550YSHM-A

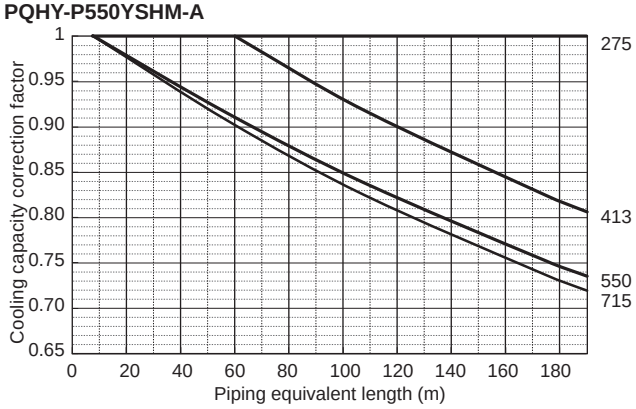

PQHY-P400YSHM-A

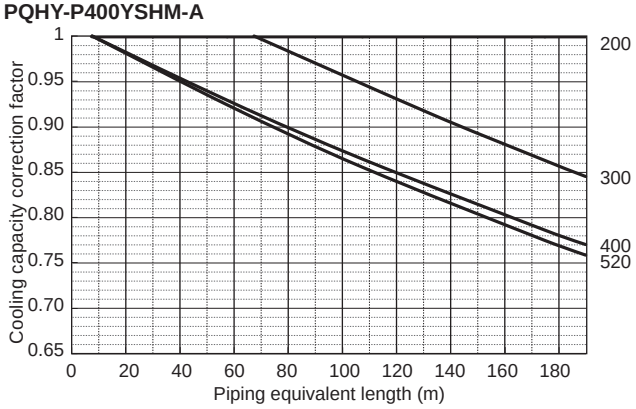

PQHY-P600YSHM-A

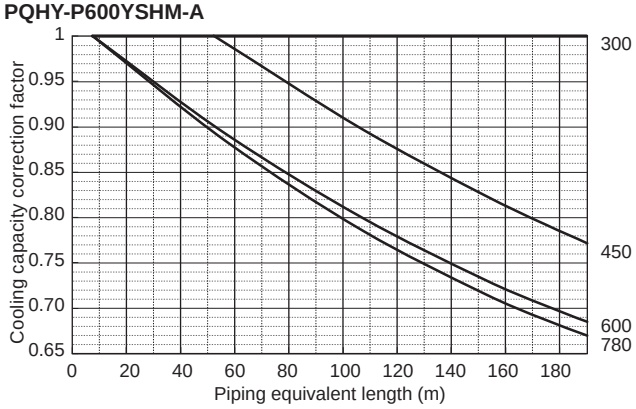

MY

6-3-2. Cooling capacity correction

PQHY-P650YSHM-A

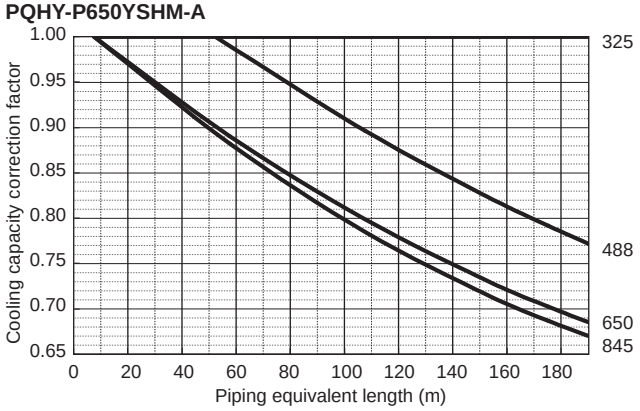

PQHY-P900YSHM-A

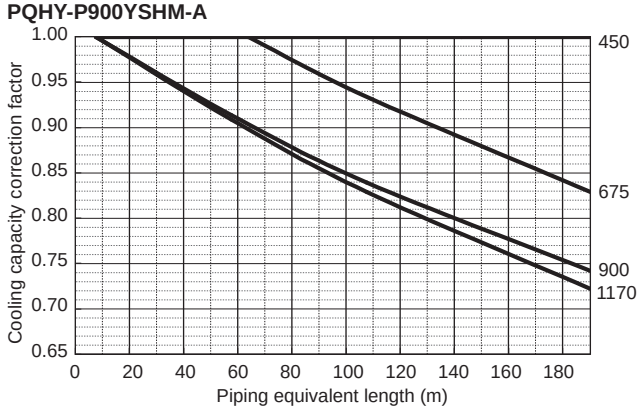

PQHY-P700, 750YSHM-A

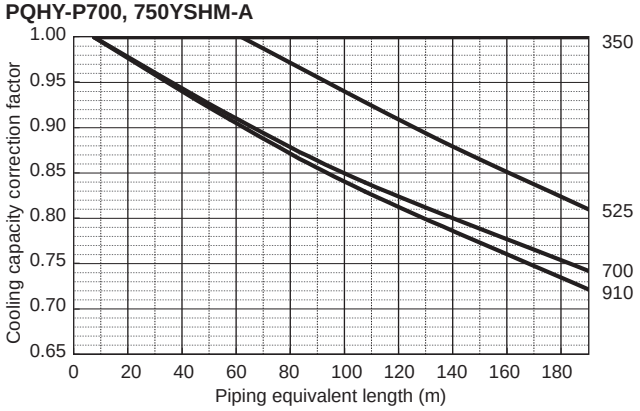

PQHY-P800YSHM-A

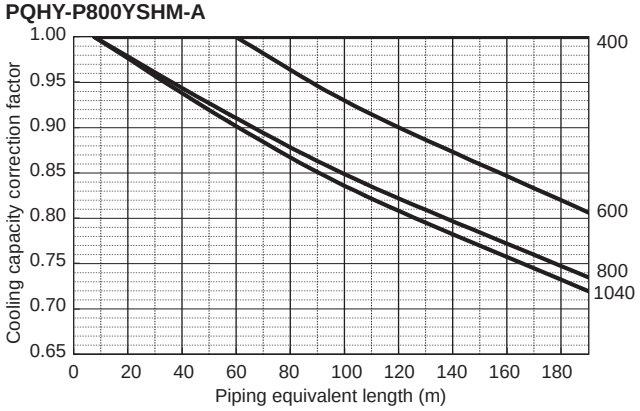

PQHY-P850YSHM-A

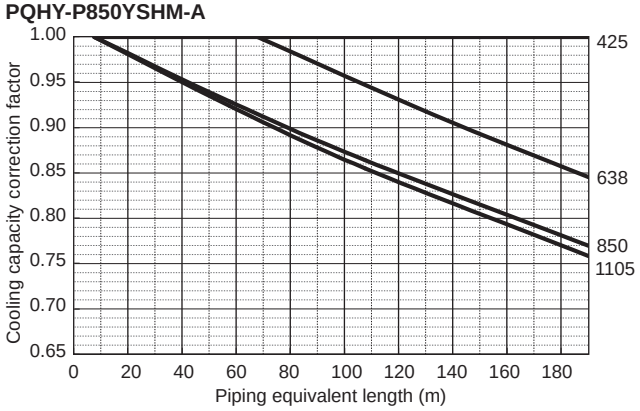

WY

6-3-3. Heating capacity correction

PQHY-P200YHM-A

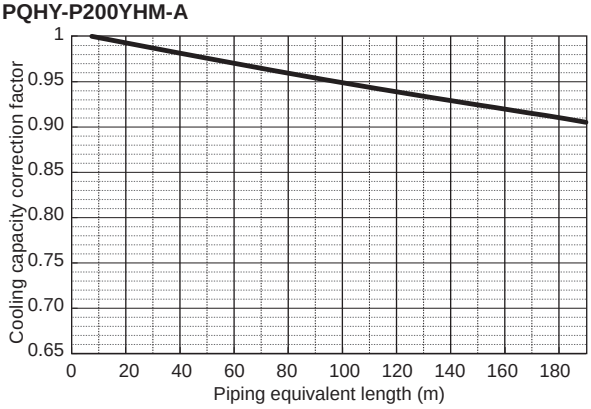

PQHY-P400, 450, 500YSHM-A

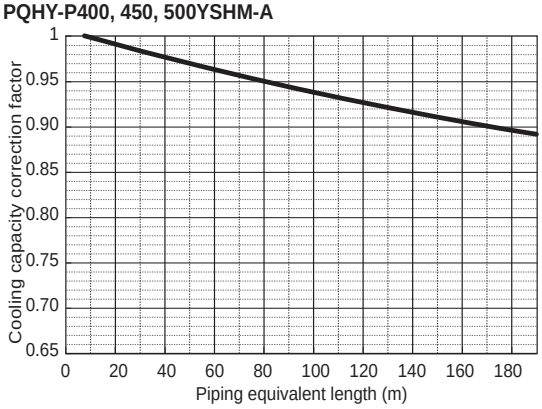

PQHY-P250, 300YHM-A

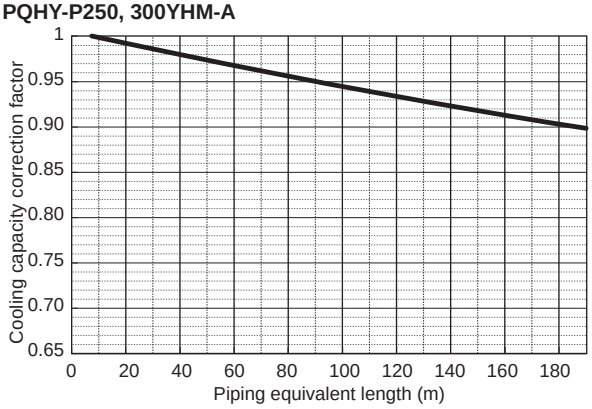

PQHY-P550, 600YSHM-A

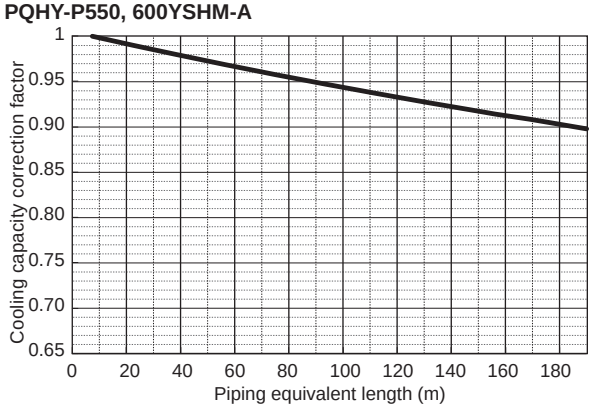

PQHY-P650YSHM-A

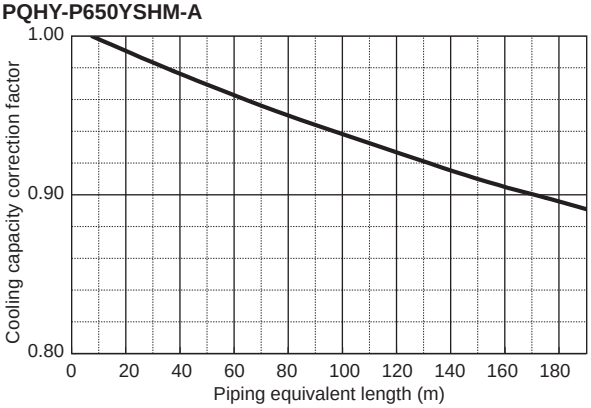

PQHY-P850, 900YSHM-A

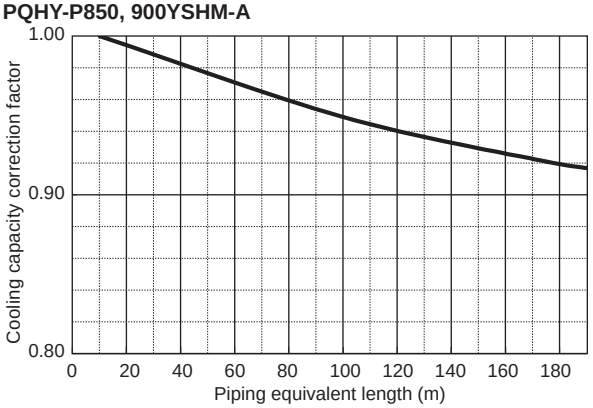

PQHY-P700, 750, 800YSHM-A

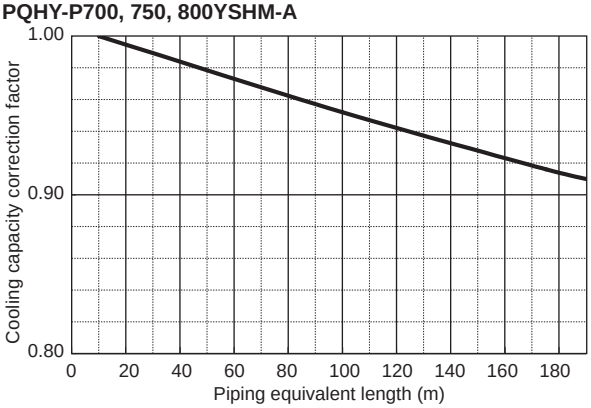

WY

6-3-4. How to obtain the equivalent piping length

1 **PQHY-P200YHM**
Equivalent length = (Actual piping length to the farthest indoor unit) + (0.35 x number of bends in the piping) m

2 **PQHY-P250, 300YHM**
Equivalent length = (Actual piping length to the farthest indoor unit) + (0.42 x number of bends in the piping) m

3 **PQHY-P400, 450, 500, 550, 600, 650YSHM**
Equivalent length = (Actual piping length to the farthest indoor unit) + (0.50 x number of bends in the piping) m

4 **PQHY-P700, 750, 800YSHM**
Equivalent length = (Actual piping length to the farthest indoor unit) + (0.70 x number of bends in the piping) m

5 **PQHY-P850, 900YSHM**
Equivalent length = (Actual piping length to the farthest indoor unit) + (0.80 x number of bends in the piping) m

6-4. Operation temperature range

• **Cooling**

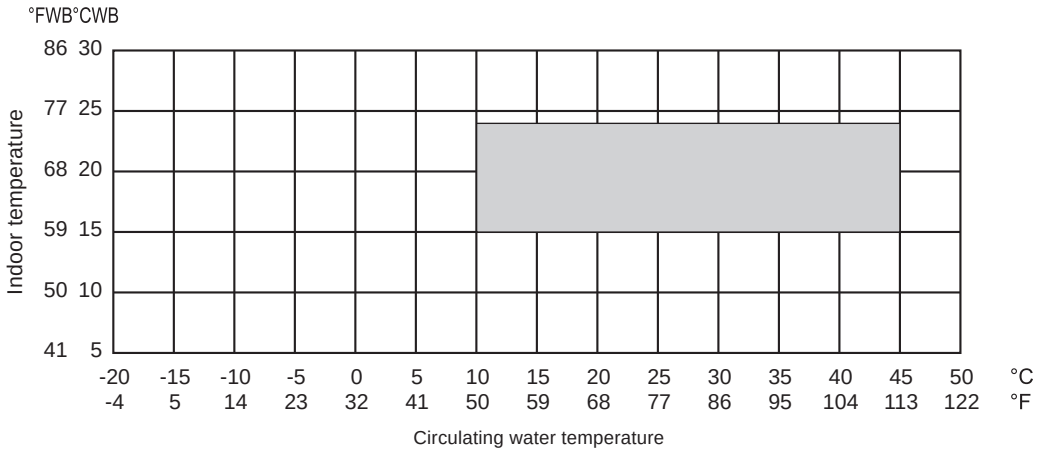

• **Heating**

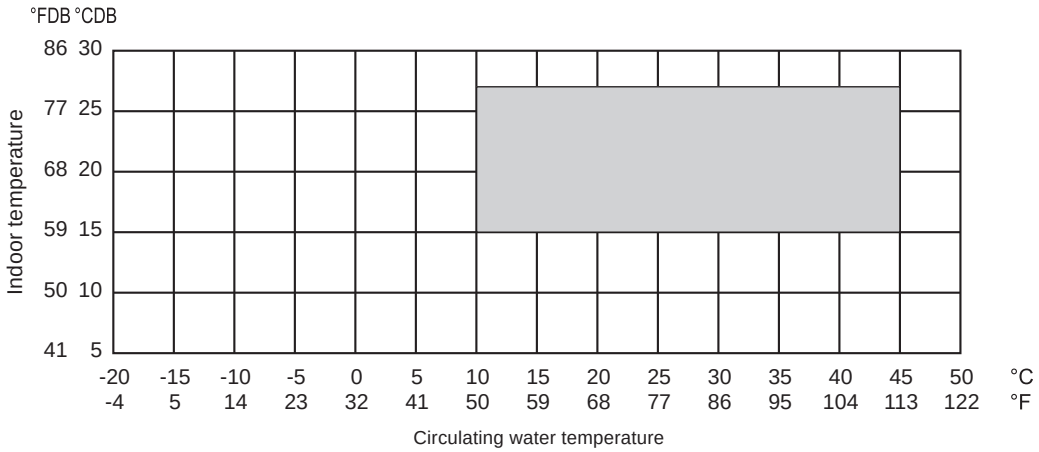

WY

7-1. Designing of water circuit system

1) Example of basic water circuit

The water circuit of the water heat source CITY MULTI connects the heat source unit with the cooling tower/auxiliary heat source/heat storage tank/circulation pump with a single system water piping as shown in the figure below. The selector valve automatically controls to circulate water toward the cooling tower in the cooling season, while toward the heat storage tank in the heating season. If the circulation water temperature is kept in a range of 10~45°C[50~113°F]* regardless of the building load, the water heat source CITY MULTI can be operated for either cooling or heating. Therefore in the summer when only cooling load exists, the temperature rise of circulation water will be suppressed by operating the cooling tower. While in the winter when heating load increases, the temperature of circulation water may be dropped below 10°C[50°F]. Under such situation, the circulation water will be heated with the auxiliary heat source if it drops below a certain temperature.

When the thermal balance between cooling and heating operation is in a correct proportion, the operation of the auxiliary heat source and cooling tower is not required.

In order to control the above thermal balance properly and use thermal energy effectively, utilizing of heat storage tanks, and night-time discounted electric power as a auxiliary heat source will be economical.

Meantime as this system uses plural sets of heat source unit equipped with water heat exchangers, water quality control is important. Therefore it is recommended to use closed type cooling towers as much as possible to prevent the circulation water from being contaminated.

When open type cooling towers are used, it is essential to provide proper maintenance control such as that to install water treatment system to prevent troubles caused by contaminated circulation water.

WY

Example of basic water circuit for water heat source CITY MULTI

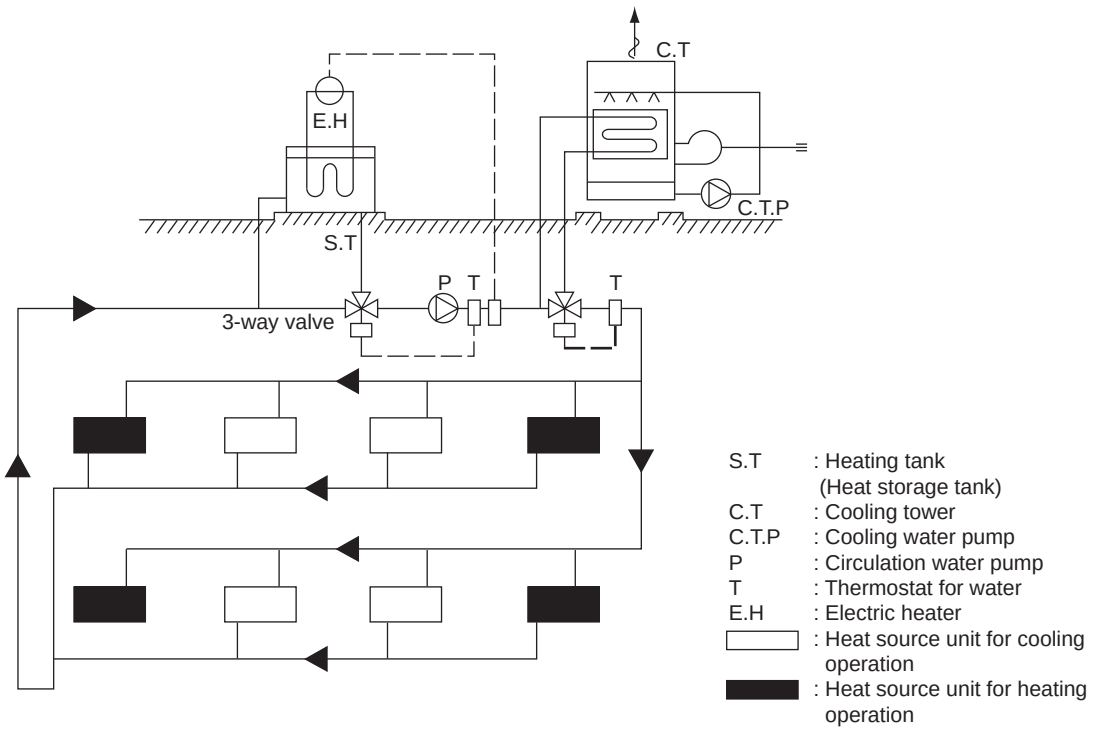

The indoor unit and refrigerant piping system are excluded in this figure.

2) Cooling tower

a) Types of cooling tower

The cooling towers presently used include the open type cooling tower, open type cooling tower + heat exchanger, closed type cooling tower, and air-cooled type cooling tower. However, as the quality control of circulation water is essential when units are installed in decentralized state inside a building, the closed type cooling tower is generally employed in such case.

Although the circulation water will not be contaminated by atmospheric air, it is recommended to periodically blow water inside the system and replenish fresh water instead.

In a district where the coil may be frozen in the winter, it is necessary to apply antifreeze solution to the circulation water, or take freeze protection measures such as to automatically discharge water inside the cooling coil at the stopping of the pump.

When the open type cooling tower is used, be sure to install a water quality control device in addition to the freeze protection measures, as the water may be deteriorated by atmospheric contaminants entered into the cooling tower and dissolved into the circulation water.

Types of cooling towers

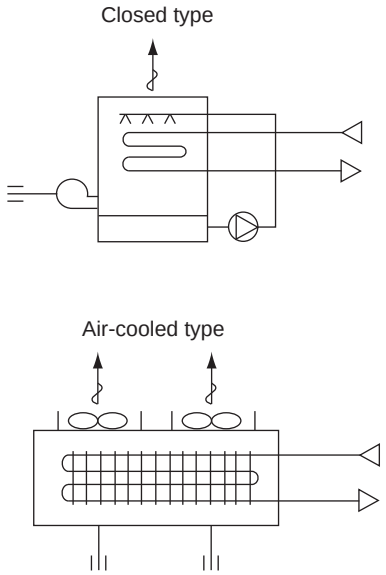

b) Calculation method of cooling tower capacity

All units of the water heat source CITY MULTI may possibly be in cooling operation temporarily (at pulling down) in the summer, however, it is not necessary to determine the capacity according to the total cooling capacity of all CITY MULTI units as this system has a wide operating water temperature range (10~45°C) [50~113°F].

It is determined in accordance with the value obtained by adding the maximum cooling load of an actual building, the input heat equivalent value of all CITY MULTI units, and the cooling load of the circulating pumps. Please check for the values of the cooling water volume and circulation water volume.

$$\text{Cooling tower capacity} = \frac{Qc + 860 \times (\Sigma Qw + Pw)}{3{,}900} \text{ (Refrigeration ton)}$$

Qc : Maximum cooling load under actual state (kcal/h)
Qw : Total input of water heat source CITY MULTI at simultaneous operation under maximum state (kW)
Pw : Shaft power of circulation pumps (kW)

$$\text{Cooling tower capacity} = \frac{Qc + 3{,}412 \times (\Sigma Qw + Pw)}{15{,}500} \text{ (Refrigeration ton)}$$

Qc : Maximum cooling load under actual state (BTU/h)
Qw : Total input of water heat source CITY MULTI at simultaneous operation under maximum state (kW)
Pw : Shaft power of circulation pumps (kW)

* 1 Refrigerant ton of cooling tower capacity ≈ US refrigerant ton x (1+0.3)
= 3,900 kcal/h = 15,500 BTU/h

WY

3) Auxiliary heat source and heat storage tank

When the heating load is larger than the cooling load, the circulation water temperature lowers in accordance with the heat balance of the system. It should be heated by the auxiliary heat source in order to keep the inlet water temperature within the operating range (10°C[50°F] or more) of the water heat source CITY MULTI.

Further in order to operate the water heat source CITY MULTI effectively, it is recommended to utilize the heat storage tank to cover the warming up load in the morning and the insufficient heat amount.
Effective heat utilization can be expected to cover insufficient heat at the warming up in the next morning or peak load time by storing heat by installing a heat storage tank or operating a low load auxiliary heat source at the stopping of the water heat source CITY MULTI. As it can also be possible to reduce the running cost through the heat storage by using the discounted night-time electric power, using both auxiliary heat source and heat storage tank together is recommended.

The effective temperature difference of an ordinary heat storage tank shows about 5deg. even with the storing temperature at 45°C[113°F].
However with the water heat source CITY MULTI, it can be utilized as heating heat source up to 15°C[59°F] with an effective temperature of a high 30deg°C[54deg°F]. approximately, thus the capacity of the heat storage tank can be minimized.

a) Auxiliary heat source

The following can be used as the auxiliary heat source.

- Boiler (Heavy oil, kerosine, gas, electricity)
- Electric heat (Insertion of electric heater into heat storage tank)
- Outdoor air (Air-heat source heat pump chiller)
- Warm discharge water (Exhaust water heat from machines inside building and hot water supply)
- Utilization of night-time lighting
- Solar heat

Please note that the auxiliary heat source should be selected after studying your operating environment and economical feasibility.

Determining the auxiliary heat source capacity

For the CITY MULTI water heat source system, a heat storage tank is recommended to use. When employment of the heat storage tank is difficult, the warming up operation should be arranged to cover the starting up heating load. Since the holding water inside the piping circuit owns heat capacity and the warming up operation can be assumed for about one hour except that in a cold region, the heat storage tank capacity is required to be that at the maximum daily heating load including the warming up load at the next morning of the holiday. However the auxiliary heat source capacity should be determined by the daily heating load including warming up load on the week day.
For the load at the next morning of the holiday, heat storage is required by operating the auxiliary heat source even outside of the ordinary working hour.

When heat storage tank is not used

$$QH = HC_T \left(1 - \frac{1}{COP_h}\right) - 1000 \times V_W \times \Delta T - 860 \times P_W$$

QH	: Auxiliary heat source capacity	(kcal/h)
HC_T	: Total heating capacity of each water heat source CITY MULTI	(kcal/h)
COP_H	: COP of water heat source CITY MULTI at heating	
V_W	: Holding water volume inside piping	(m^3)
ΔT	: Allowable water temperature drop = $T_{WH} - T_{WL}$	(°C)
T_{WH}	: Heat source water temperature at high temperature side	(°C)
T_{WL}	: Heat source water temperature at low temperature side	(°C)
P_W	: Heat source water pump shaft power	(kW)

$$QH = HC_T \left(1 - \frac{1}{COP_h}\right) - 8.343 \times V_W \times \Delta T - 3412 \times P_W$$

QH	: Auxiliary heat source capacity	(BTU/h)
HC_T	: Total heating capacity of each water heat source CITY MULTI	(BTU/h)
COP_H	: COP of water heat source CITY MULTI at heating	
V_W	: Holding water volume inside piping	(G)
ΔT	: Allowable water temperature drop = $T_{WH} - T_{WL}$	(°F)
T_{WH}	: Heat source water temperature at high temperature side	(°F)
T_{WL}	: Heat source water temperature at low temperature side	(°F)
P_W	: Heat source water pump shaft power	(kW)

When heat storage tank is not used

$$QH = \frac{HQ_{1T} \cdot \left(1 - \frac{1}{COP_h}\right) - 860 \times Pw \times T_2}{T1} \times K \qquad \text{(kcal)}$$

QH_{1T}	: Total of heating load on weekday including warming up	(kcal/day)
T_1	: Operating hour of auxiliary heat source	(h)
T_2	: Operating hour of heat source water pump	(h)
K	: Allowance factor (Heat storage tank, piping loss, etc.)	1.05~1.10

HQ_{1T} is calculated from the result of steady state load calculation similarly by using the equation below.

$$HQ_{1T} = 1.15 \times (\Sigma Q'a + \Sigma Q'b + \Sigma Q'c + \Sigma Q'd + \Sigma Q'f)\, T_2 - \psi\, (\Sigma Qe_1 + \Sigma Qe_2 + \Sigma Qe_3)\, (T2 - 1)$$

Q'a	: Thermal load from external wall/roof in each zone	(kcal/h)
Q'b	: Thermal load from glass window in each zone	(kcal/h)
Q'c	: Thermal load from partition/ceiling/floor in each zone	(kcal/h)
Q'd	: Thermal load by infiltration in each zone	(kcal/h)
Q'f	: Fresh outdoor air load in each zone	(kcal/h)
$Q'e_1$	: Thermal load from human body in each zone	(kcal/h)
$Q'e_2$	: Thermal load from lighting fixture in each zone	(kcal/h)
$Q'e_3$	: Thermal load from equipment in each zone	(kcal/h)
ψ	: Radiation load rate	0.6~0.8
T2	: Air conditioning hour	

$$QH = \frac{HQ_{1T} \cdot \left(1 - \frac{1}{COP_h}\right) - 3{,}412 \times Pw \times T_2}{T1} \times K \qquad \text{(BTU)}$$

QH_{1T}	: Total of heating load on weekday including warming up	(BTU/day)
T_1	: Operating hour of auxiliary heat source	(h)
T_2	: Operating hour of heat source water pump	(h)
K	: Allowance factor (Heat storage tank, piping loss, etc.)	1.05~1.10

HQ_{1T} is calculated from the result of steady state load calculation similarly by using the equation below.

$$HQ_{1T} = 1.15 \times (\Sigma Q'a + \Sigma Q'b + \Sigma Q'c + \Sigma Q'd + \Sigma Q'f)\, T_2 - \psi\, (\Sigma Qe_1 + \Sigma Qe_2 + \Sigma Qe_3)\, (T2 - 1)$$

Q'a	: Thermal load from external wall/roof in each zone	(BTU/h)
Q'b	: Thermal load from glass window in each zone	(BTU/h)
Q'c	: Thermal load from partition/ceiling/floor in each zone	(BTU/h)
Q'd	: Thermal load by infiltration in each zone	(BTU/h)
Q'f	: Fresh outdoor air load in each zone	(BTU/h)
$Q'e_1$	: Thermal load from human body in each zone	(BTU/h)
$Q'e_2$	: Thermal load from lighting fixture in each zone	(BTU/h)
$Q'e_3$	: Thermal load from equipment in each zone	(BTU/h)
ψ	: Radiation load rate	0.6~0.8
T2	: Air conditioning hour	

WY

b) Heat storage tank

Heat storage tank can be classified by types into the open type heat storage tank exposed to atmosphere, and the closed type heat storage tank with structure separated from atmosphere. Although the size of the tank and its installation place should be taken into account, the closed type tank is being usually employed by considering corrosion problems.
The capacity of heat storage tanks is determined in accordance with the daily maximum heating load that includes warming up load to be applied for the day after the holiday.

When auxiliary heat source is operated during operation and even after stopping of water heat source CITY MULTI unit

$$V = \frac{HQ_{2T}\left(1 - \frac{1}{COP_h}\right) - 860 \times Pw \times T_2 - QH \times T_2}{\Delta T \times 1{,}000 \times \eta V} \quad \text{(ton)}$$

HQ_{2T} : Maximum heating load including load required for the day after the holiday (kcal/day)
ΔT : Temperature difference utilized by heat storage tank (deg°C)
ηV : Heat storage tank efficiency

HQ_{2T} : $1.3 \times (\Sigma Q'a + \Sigma Q'c + \Sigma Q'd + \Sigma Q'f)\ T2 - \psi(\Sigma Qe2 + \Sigma Qe3)\ (T2 - 1)$

$$V = \frac{HQ_{2T}\left(1 - \frac{1}{COP_h}\right) - 3{,}412 \times Pw \times T_2 - QH \times T_2}{\Delta T \times \eta V} \quad \text{(lbs)}$$

HQ_{2T} : Maximum heating load including load required for the day after the holiday (BTU/day)
ΔT : Temperature difference utilized by heat storage tank (deg°F)
ηV : Heat storage tank efficiency

HQ_{2T} : $1.3 \times (\Sigma Q'a + \Sigma Q'c + \Sigma Q'd + \Sigma Q'f)\ T2 - \psi(\Sigma Qe2 + \Sigma Qe3)\ (T2 - 1)$

When auxiliary heat source is operated after stopping of water heat source CITY MULTI unit

$$V = \frac{HQ_{2T}\left(1 - \frac{1}{COP_h}\right) - 860 \times Pw \times T_2}{\Delta T \times 1{,}000 \times \eta V} \quad \text{(ton)}$$

HQ_{2T} : Maximum heating load including load required for the day after the holiday (kcal/day)
ΔT : Temperature difference utilized by heat storage tank (deg°C)
ηV : Heat storage tank efficiency

HQ_{2T} : $1.3 \times (\Sigma Q'a + \Sigma Q'c + \Sigma Q'd + \Sigma Q'f)\ T2 - \psi(\Sigma Qe2 + \Sigma Qe3)\ (T2 - 1)$

$$V = \frac{HQ_{2T}\left(1 - \frac{1}{COP_h}\right) - 3{,}412 \times Pw \times T_2}{\Delta T \times \eta V} \quad \text{(lbs)}$$

HQ_{2T} : Maximum heating load including load required for the day after the holiday (BTU/day)
ΔT : Temperature difference utilized by heat storage tank (deg°F)
ηV : Heat storage tank efficiency

HQ_{2T} : $1.3 \times (\Sigma Q'a + \Sigma Q'c + \Sigma Q'd + \Sigma Q'f)\ T2 - \psi(\Sigma Qe2 + \Sigma Qe3)\ (T2 - 1)$

4) Piping system

The following items should be kept in your mind in planning / designing water circuits.

a) All units should be constituted in a single circuit in principle.

b) When plural numbers of the water heat source CITY MULTI unit are installed, the rated circulating water flow rate should be kept by making the piping resistance to each unit almost same value. As an example, the reverse return system as shown below may be employed.

c) Depending on the structure of a building, the water circuit may be prefabricated by making the layout uniform.

d) When a closed type piping circuit is constructed, install an expansion tank usable commonly for a make-up water tank to absorb the expansion/contraction of water caused by temperature fluctuation.

e) If the operating temperature range of circulation water stays within the temperature near the normal temperature (summer : 29.4°C[85°F], winter : 21.1°C[70°F]), thermal insulation or anti-sweating work is not required for the piping inside buildings.

In case of the conditions below, however, thermal insulation is required.

- When well water is used for heat source water.
- When piped to outdoor or a place where freezing may be caused.
- When vapor condensation may be generated on piping due to an increase in dry bulb temperature caused by the entry of fresh outdoor air.

System example of water circuit

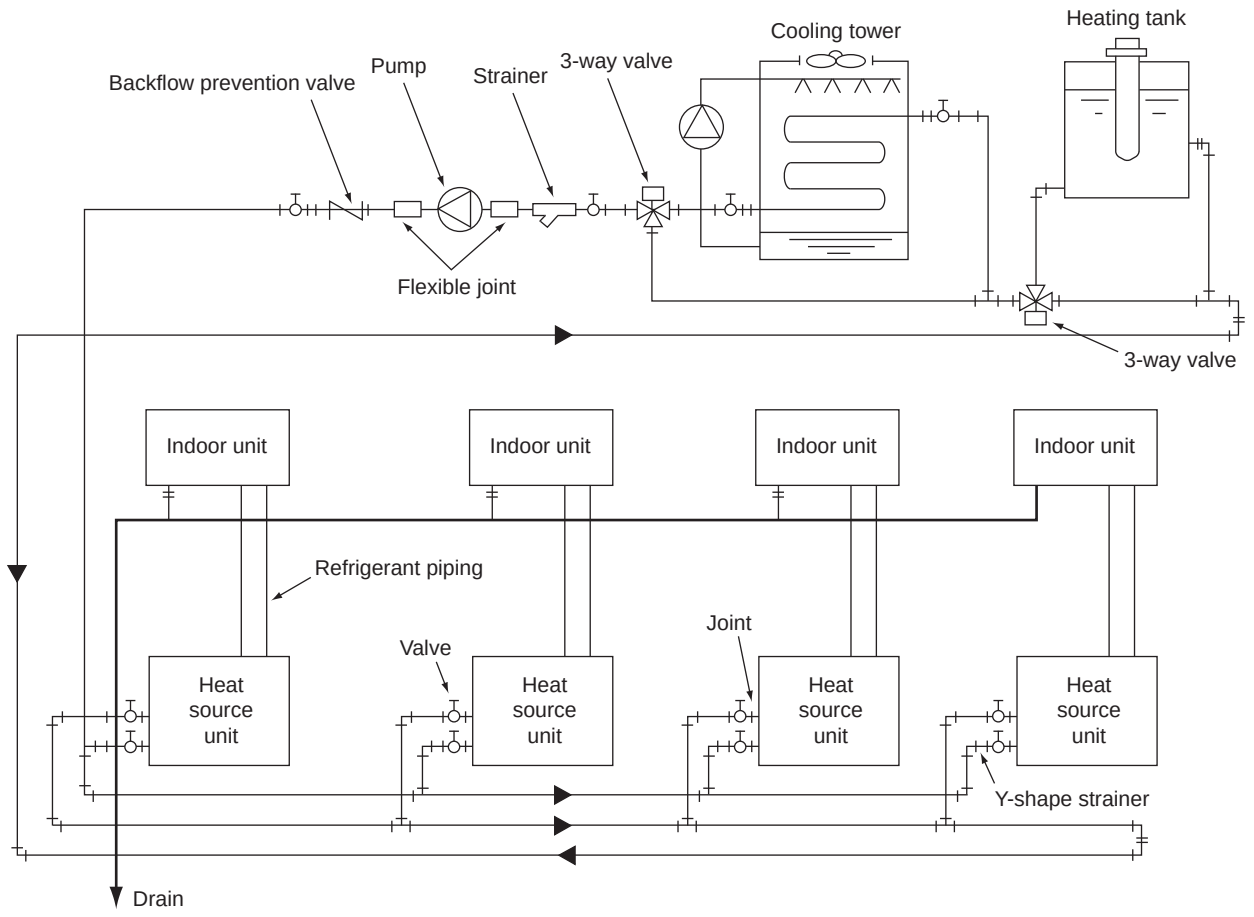

WY

5) Practical System Examples and Circulation Water Control

Since the water heat source CITY MULTI is of water heat source system, versatile systems can be constituted by combining it with various heat sources.
The practical system examples are given below.
Either cooling or heating operation can be performed if the circulation water temperature of the water heat source CITY MULTI stays within a range of 10~45°C [50~113°F]. However, the circulation water temperature near 32°C[90°F] for cooling and 20°C[68°F] for heating is recommended by taking the life, power consumption and capacity of the air conditioning units into consideration. The detail of the control is also shown below.

Example-1 Combination of closed type cooling tower and hot water heat storage tank (using underground hollow slab)

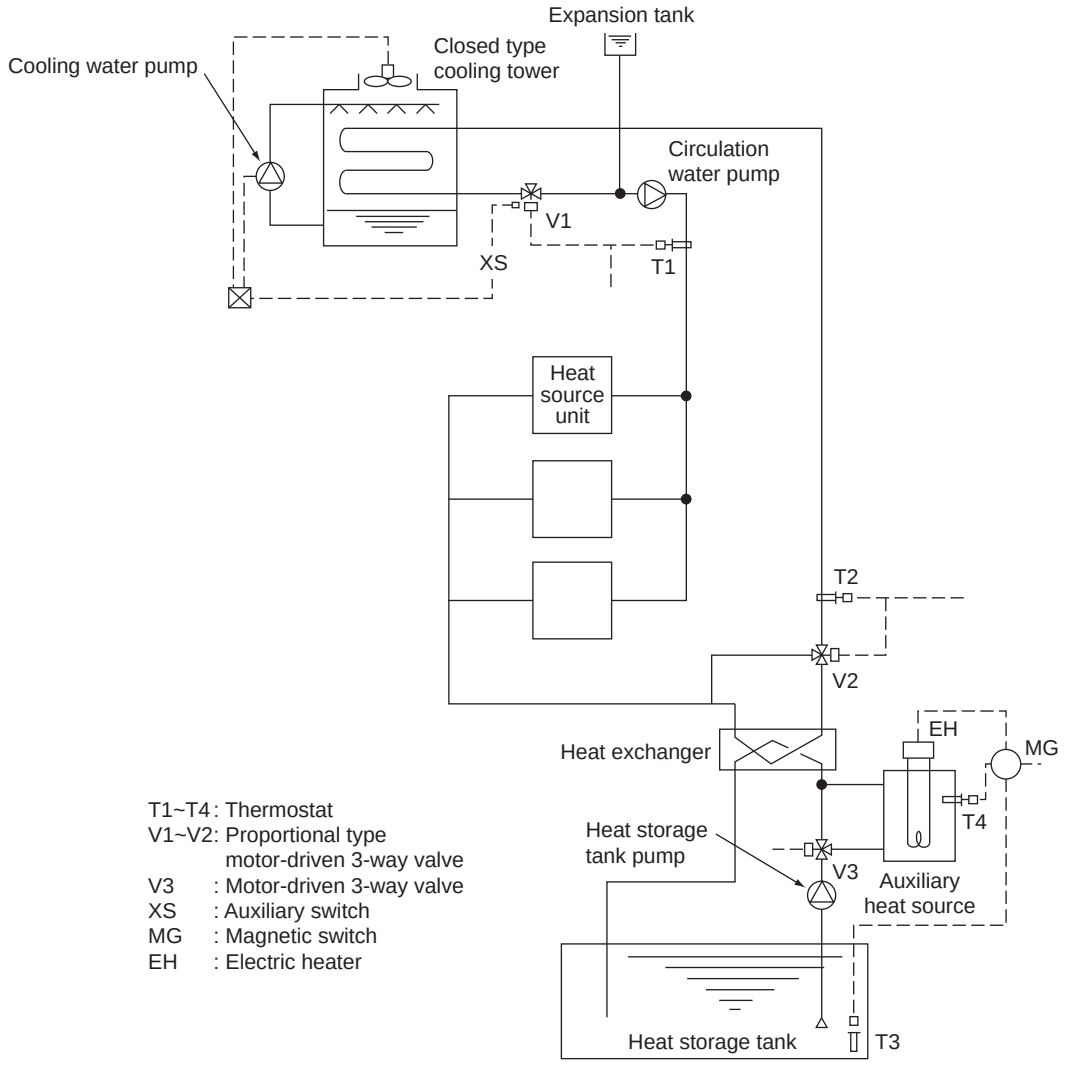

By detecting the circulation water temperature of the water heat source CITY MULTI system with T1 (around 32°C[90°F]) and T2 (around 20°C[68°F]), the temperature will be controlled by opening/closing V1 in the summer and V2 in the winter.
In the summer, as the circulation water temperature rises exceeding the set temperature of T1, the bypass port of V1 will open to lower the circulation water temperature. While in the winter, as the circulation water temperature drops, V2 will open following the command of T2 to rise the circulation water temperature.
The water inside the heat storage tank will be heated by the auxiliary heat source by V3 being opened with timer operation in the night-time. The electric heater of the auxiliary heat source will be controlled by T3 and the timer. The start/stop control of the fan and pump of the closed type cooling tower is applied with the step control of the fan and pump following the command of the auxiliary switch XS of V1, that operates only the fan at the light load while the fan and pump at the maximum load thus controlling water temperature and saving motor power.

Example-2 Combination of closed type cooling tower and hot water heat storage tank

T1 : Proportional type, insertion system thermostat
T2 : Proportional type, insertion system thermostat
T3 : Proportional type, insertion system thermostat
V1 : Proportional type, motor-driven 3-way valve
V2 : Proportional type, motor-driven 3-way valve
XS : Auxiliary switch (Duplex switch type)
SC : Step controller
R : Relay
MG : Magnetic

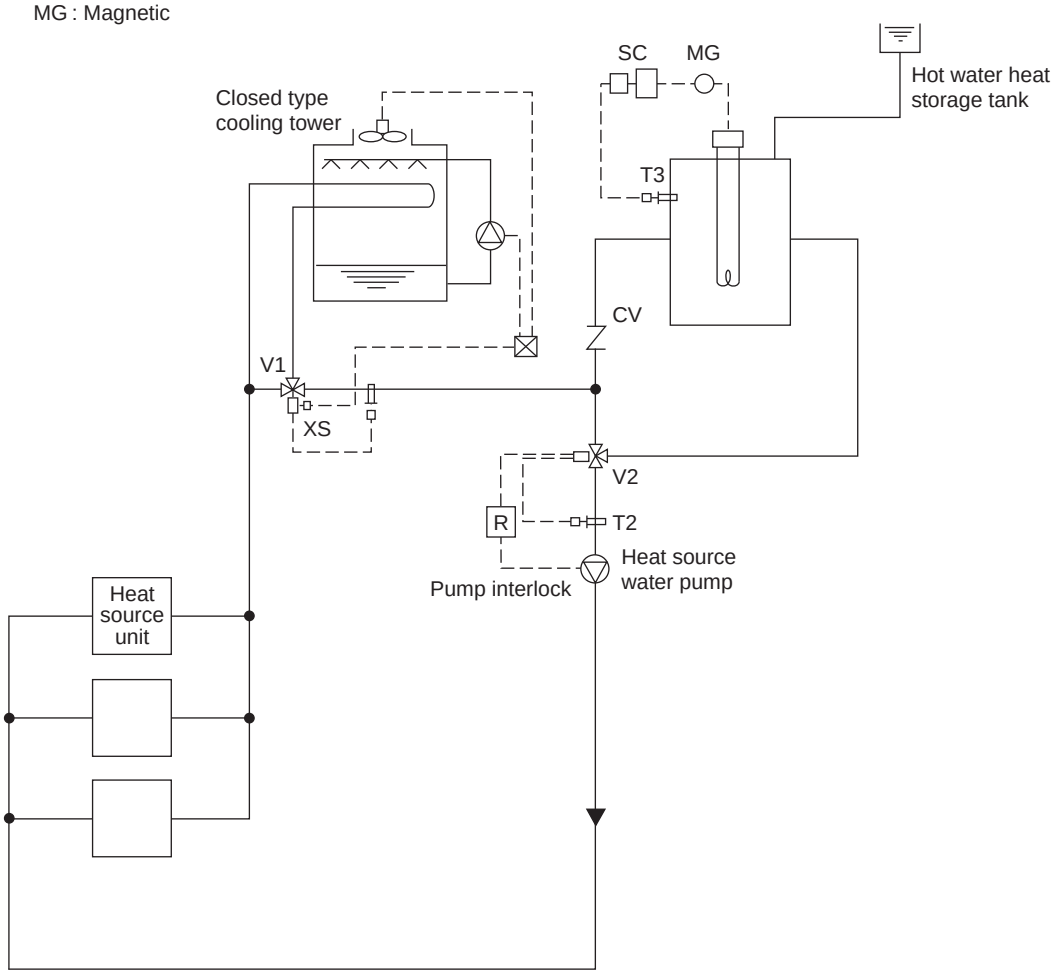

In the summer, as the circulation water temperature rises exceeding the set temperature of T1, the bypass port of V1 will open to lower the circulation water temperature. In the winter, if the circulation water temperature stays below 25°C[77°F], V2 will open/close by the command of T2 to keep the circulation water temperature constant.
The temperature of the hot water inside the heat storage tank will be controlled through the step control of the electric heater by step controller operation following the command of T3.
During the stopping of the heat source water pump, the bypass port of V2 will be closed fully by interlocking thus preventing the high temperature water from entering into the system at the starting of the pump.
The start/stop control of the fan and pump of the closed type cooling tower is applied with the step control of the fan and pump following the command of the auxiliary switch XS of V1, that operates only the fan at the light load while the fan and pump at the maximum load thus controlling water temperature and saving motor power.

Example-3 Combination of closed type cooling tower and boiler

T1 : Proportional type, insertion system thermostat
T2 : Proportional type, insertion system thermostat
T3 : Proportional type, insertion system thermostat
V1 : Proportional type, motor-driven 3-way valve
S : Selector switch
R : Relay
XS : Auxiliary switch (Duplex switch type)

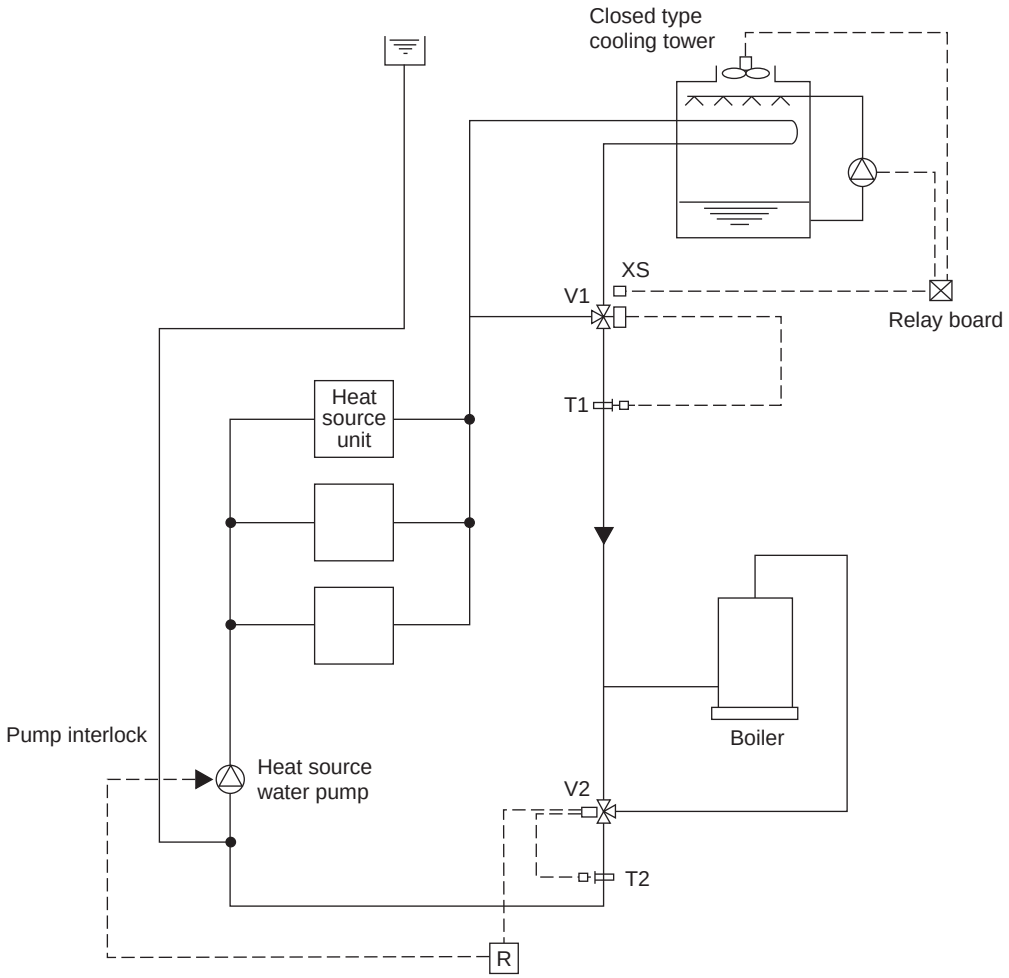

In the summer, as the circulation water temperature rises exceeding the set temperature of T1, the bypass port of V1 will close to lower the circulation water temperature. In the winter, if the circulation water temperature drops below 25°C[77°F], V2 will conduct water temperature control to keep the circulation water temperature constant.
During the stopping of the heat source water pump, the bypass port of V2 will be closed fully by interlocking.
The start/stop control of the fan and pump of the closed type cooling tower is applied with the step control following the command of the auxiliary switch XS of V1, thus controlling water temperature and saving motor power.

Example-4 Combination of closed type cooling tower and heat exchanger (of other heat source)

T1 : Proportional type, insertion system thermostat
T2 : Proportional type, insertion system thermostat
V1 : Proportional type, motor-driven 3-way valve
V2 : Proportional type, motor-driven 3-way valve
S : Selector switch
R : Relay
XS : Auxiliary switch (Duplex switch type)

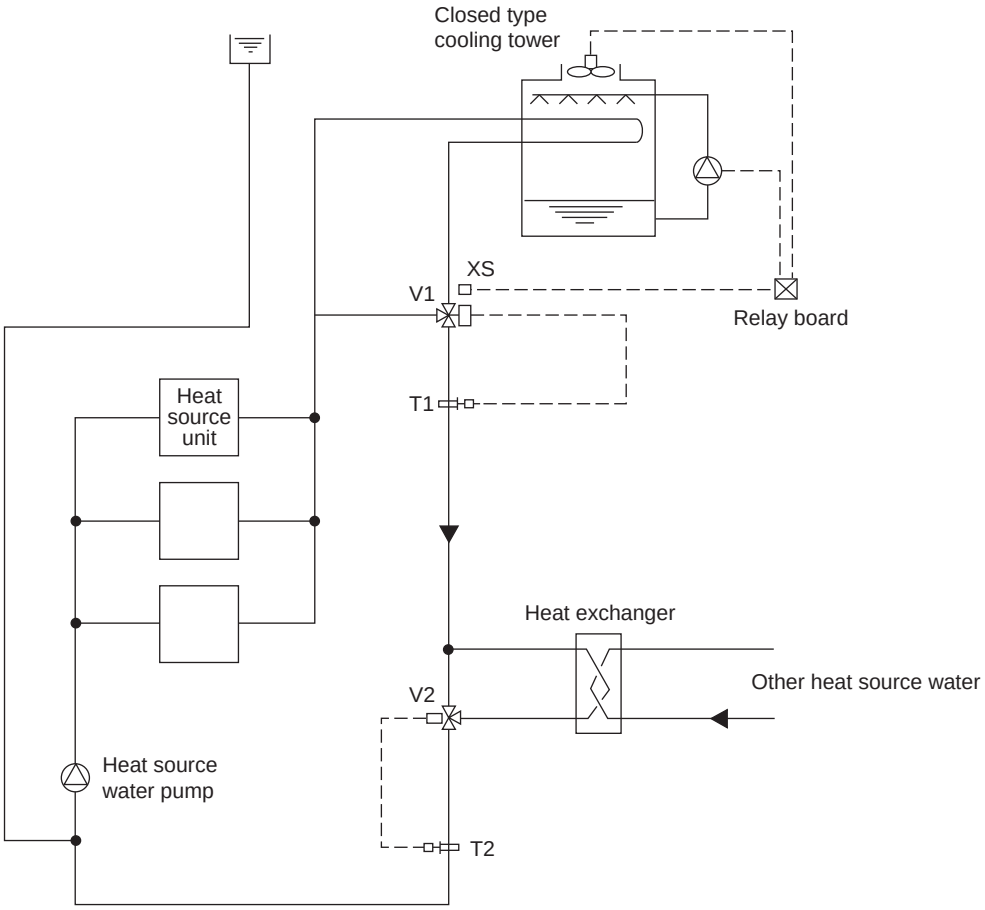

In the summer, as the circulation water temperature rises exceeding the set temperature of T1, the bypass port of V1 will close to lower the circulation water temperature. In the winter, if the circulation water temperature drops below 26°C[79°F], V2 will conduct water temperature control to keep the circulation water temperature constant.
During the stopping of the heat source water pump, the bypass port of V2 will be closed fully by interlocking.
The start/stop control of the fan and pump of the closed type cooling tower is applied with the step control following the command of the auxiliary switch XS of V1, thus controlling water temperature and saving motor power.

WY

6) Pump interlock circuit

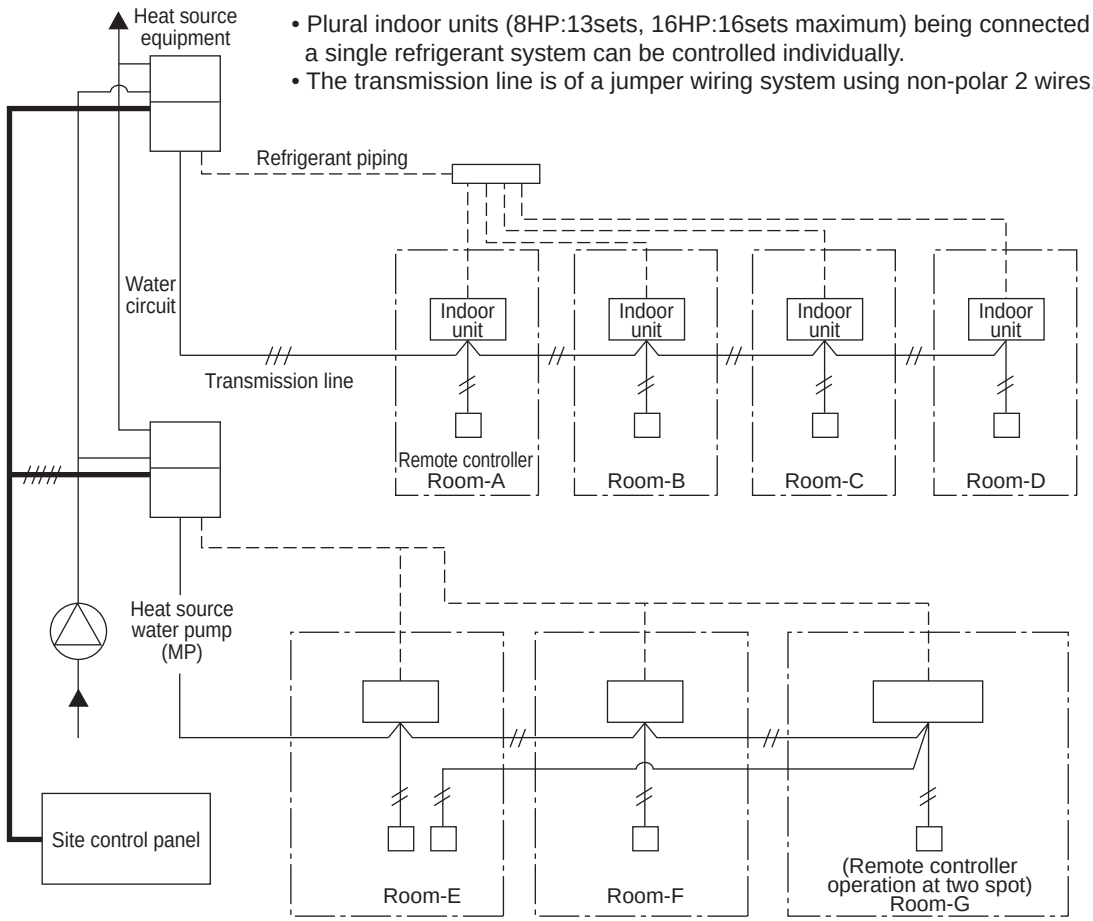

- Plural indoor units (8HP:13sets, 16HP:16sets maximum) being connected to a single refrigerant system can be controlled individually.
- The transmission line is of a jumper wiring system using non-polar 2 wires.

Wiring diagram

This circuit uses the "Terminal block for pump interlock (TB8)" inside the electrical parts box of the heat source equipment. This circuit is for interlocking of the heat source equipment operation and the heat source water pump.

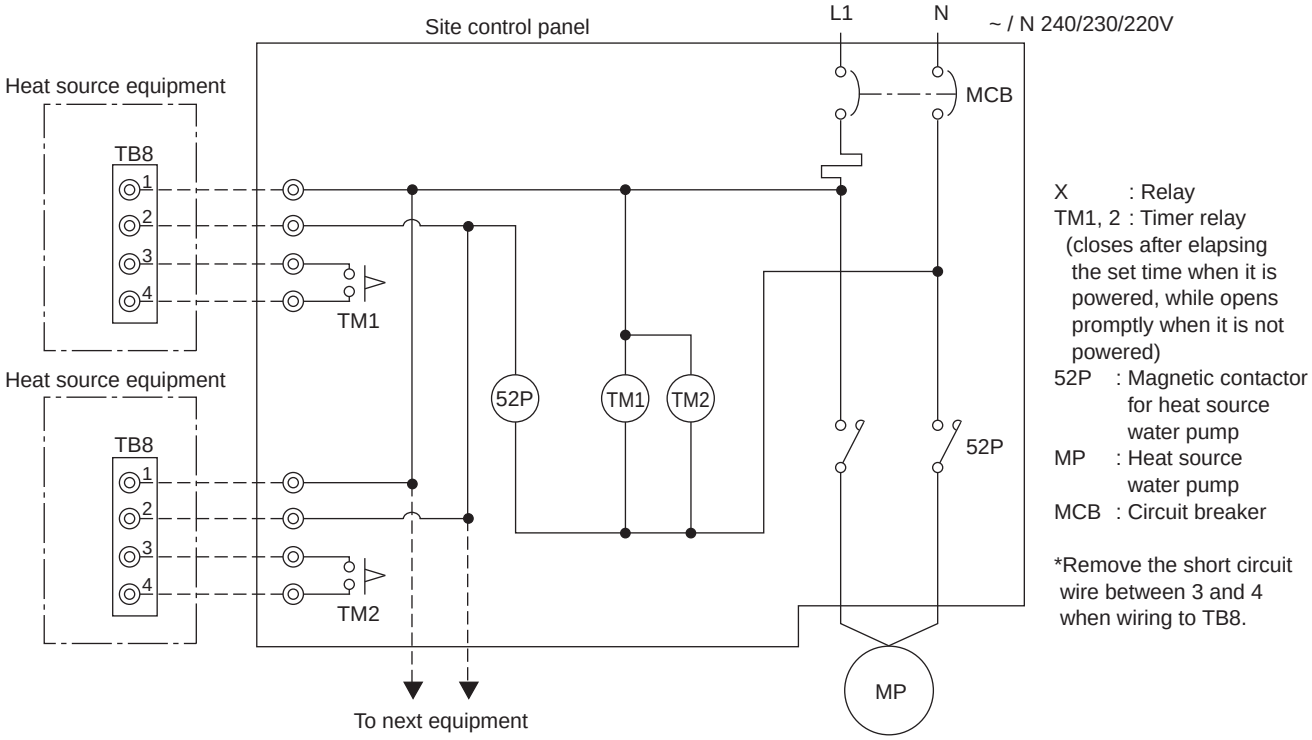

Operation ON signal

Terminal No.	TB8-1, 2
Output	Relay contacts output Rated voltage : L1 - N : 220 ~ 240V Rated load : 1A
Operation	• When Dip switch 2-7 is OFF The relay closes during compressor operation. • When DIP switch 2-7 is ON. The relay closes during reception of cooling or the heating operation signal from the controller. (Note : It is output even if the thermostat is OFF (when the compressor is stopped).)

Pump Interlock

Terminal No.	TB8-3, 4
Input	Level signal
Operation	If the circuit between TB8-3 and TB8-4 is open, compressor operation is prohibited.

7-2. Water piping work

Although the water piping for the CITY MULTI WY system does not differ from that for ordinary air conditioning systems, pay special attention to the items below in conducting the piping work.

1) Items to be observed on installation work

- In order to equalize piping resistance for each unit, adapt the reverse return system.
- Mount a joint and a valve onto the water outlet/inlet of the unit to allow for maintenance, inspection and replacement work. Be sure to mount a strainer at the water inlet piping of the unit. (The strainer is required at the circulation water inlet to protect the heat source unit.)

* The installation example of the heat source unit is shown right.

- Be sure to provide an air relief opening on the water piping properly, and purge air after feeding water to the piping system.
- Condensate will generate at the low temperature part inside the heat source equipment. Connect drain piping to the drain piping connection located at the bottom of the heat source equipment to discharge it outside the equipment.
- At the center of the header of the heat exchanger water inlet inside the unit, a plug for water discharge is being provided. Use it for maintenance work or the like.
- Mount a backflow prevention valve and a flexible joint for vibration control onto the pump.
- Provide a sleeve to the penetrating parts of the wall to prevent the piping.
- Fasten the piping with metal fitting, arrange the piping not to expose to cutting or bending force, and pay sufficient care for possible vibration.
- Be careful not to erroneously judge the position of the inlet and outlet of water.
  (Lower position : Inlet, Upper position : Outlet)
- When connecting heat source unit water piping and water piping on site, apply liquid sealing material for water piping over the sealing tape before connection. (for Maximum water pressure above 1.0MPa)
- Wrap the sealing tape as follows.

a) Wrap the joint with sealing tape in the direction of the threads (clockwise), and do not let the tape run over the edge.

b) Overlap the sealing tape by two-thirds to three-fourths of its width on each turn. Press the tape with your fingers so that it is pressed firmly against each thread.

c) Leave the 1.5th through 2nd farthest threads away from the pipe end unwrapped.

- Hold the pipe on the unit side in place with a spanner when installing the pipes or strainer. Tighten screws to a torque of 150N • m.

2) Thermal insulation work

Thermal insulation or anti sweating work is not required for the piping inside buildings in the case of the CITY MULTI WY system if the operating temperature range of circulation water stays within the temperature near the normal (summer : 29.4°C[85°F], winter : 21.1°C[70°F]).
In case of the conditions below, however, thermal insulation is required.

- Use of well water for heat source water
- Outdoor piping portions
- Indoor piping portions where freezing may be caused in winter
- A place where vapor condensation may be generated on piping due to an increase in dry bulb temperature inside the ceiling caused by the entry of fresh outdoor air
- Drain piping portions

Installation example of heat source unit

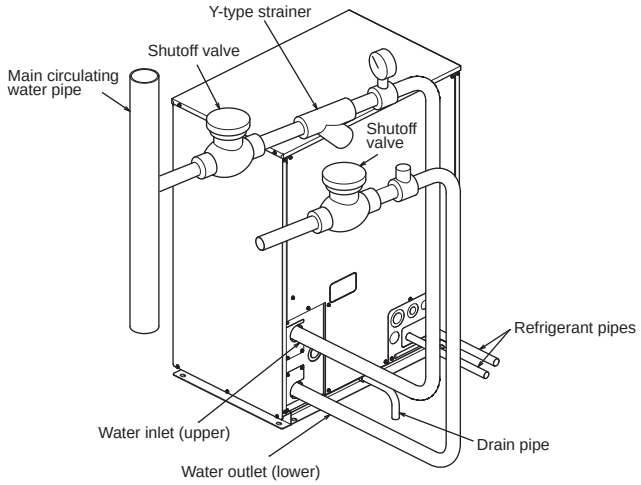

3) Water treatment and water quality control

For the circulation water cooling tower of the CITY MULTI WY system, employment of the closed type is recommended to keep water quality. However, in the case that an open type cooling tower is employed or the circulating water quality is inferior, scale will adhere onto the water heat exchanger leading to the decreased heat exchange capacity or the corrosion of the heat exchanger. Be sufficiently careful for water quality control and water treatment at the installation of the circulation water system.

- Removal of impurities inside piping
  Be careful not to allow impurities such as welding fragment, remaining sealing material and rust from mixing into the piping during installation work.
- Water treatment
  The water quality standards have been established by the industry (Japan Refrigeration, Air Conditioning Industry Association, in case of Japan) for water treatment to be applied.

Items		Lower mid-range temperature water system		Tendency	
		Recirculating water [20<T<60°C] [68<T<140°F]	Make-up water	Corrosive	Scale-forming
Standard items	pH (25°C[77°F])	7.0 ~ 8.0	7.0 ~ 8.0	○	○
	Electric conductivity (mS/m) (25°C[77°F]) (μS/cm) (25°C[77°F])	30 or less [300 or less]	30 or less [300 or less]	○	○
	Chloride ion (mg Cl^-/ ℓ)	50 or less	50 or less	○	
	Sulfate ion (mg SO_4^{2-}/ ℓ)	50 or less	50 or less	○	
	Acid consumption (pH4.8) (mg $CaCO_3$/ ℓ)	50 or less	50 or less		○
	Total hardness (mg $CaCO_3$/ ℓ)	70 or less	70 or less		○
	Calcium hardness (mg $CaCO_3$/ ℓ)	50 or less	50 or less		○
	Ionic silica (mg SiO_2/ ℓ)	30 or less	30 or less		○
Reference items	Iron (mg Fe/ ℓ)	1.0 or less	0.3 or less	○	○
	Copper (mg Cu/ ℓ)	1.0 or less	0.1 or less	○	
	Sulfide ion (mg S^{2-}/ ℓ)	not to be detected	not to be detected	○	
	Ammonium ion (mg NH_4^+/ ℓ)	0.3 or less	0.1 or less	○	
	Residual chlorine (mg Cl/ ℓ)	0.25 or less	0.3 or less	○	
	Free carbon dioxide (mg CO_2/ ℓ)	0.4 or less	4.0 or less	○	
	Ryzner stability index	–	–	○	○

Reference : Guideline of Water Quality for Refrigeration and Air Conditioning Equipment. (JRA GL02E-1994)

WY

In order to keep the water quality within such standards, you are kindly requested to conduct bleeding-off by overflow and periodical water quality tests, and use inhibitors to suppress condensation or corrosion. Since piping may be corroded by some kinds of inhibitor, consult an appropriate water treatment expert for proper water treatment.

4) Pump interlock

Operating the heat source unit without circulation water inside the water piping can cause a trouble. Be sure to provide interlocking for the unit operation and water circuit. Since the terminal block is being provided inside the unit, use it as required.

8. OPTIONAL PARTS

8-1. JOINT

Piping for CITY MULTI can be easily done with Joints and headers provided by MITSUBISHI ELECTRIC CORP..
There are 4 sets of Joints selectable for piping. Details for applying the Joint sets are referable to System Design 3, or their own Installation Manual.

CMY-Y102S-G2

mm

For Gas pipe:

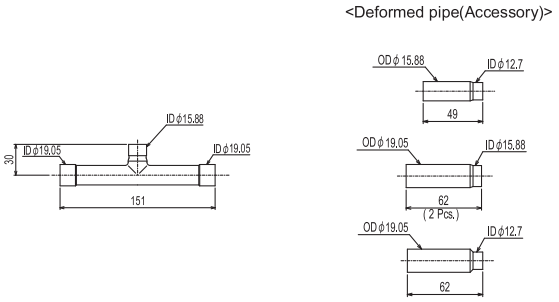

For Liquid pipe:

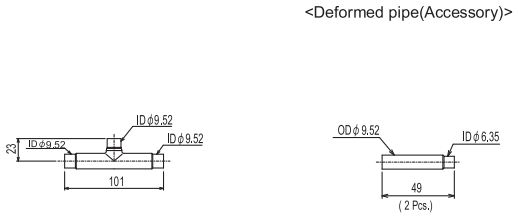

ID: Inner Diameter OD: Outer Diameter

CMY-Y102L-G2

mm

For Gas pipe:

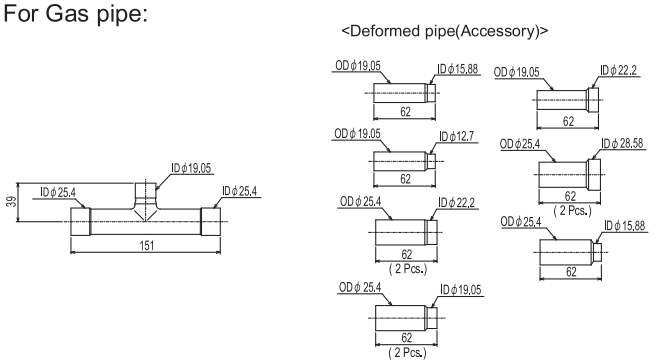

For Liquid pipe:

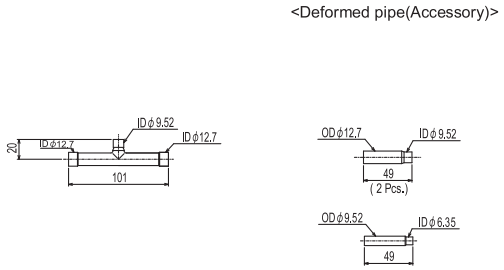

ID: Inner Diameter OD: Outer Diameter

CMY-Y202-G2

mm

For Gas pipe:

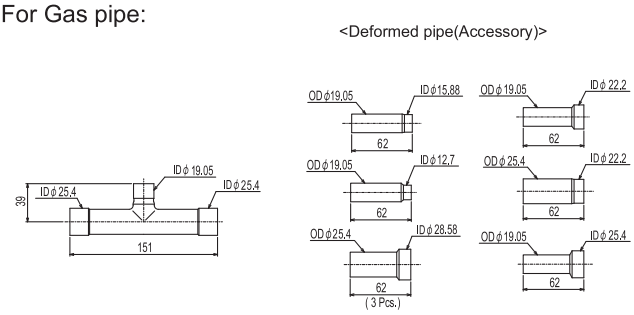

For Liquid pipe:

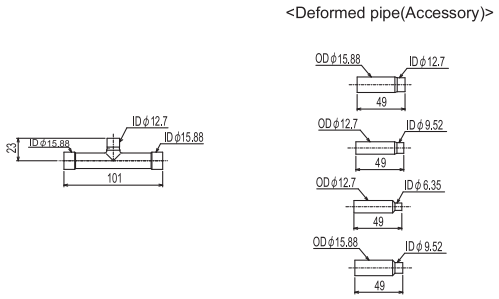

ID: Inner Diameter OD: Outer Diameter

CMY-Y302-G2

mm

For Gas pipe:

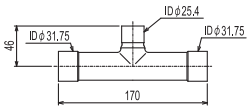

<Deformed pipe(Accessory)>

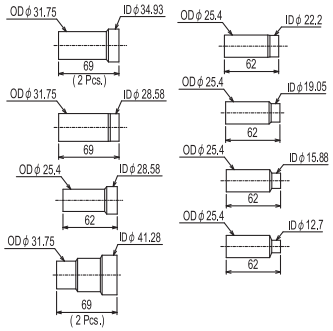

For Liquid pipe:

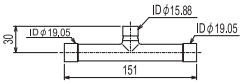

<Deformed pipe(Accessory)>

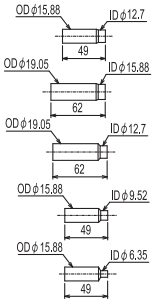

ID: Inner Diameter OD: Outer Diameter

WY

8-2. HEADER

Piping for CITY MULTI can be easily done with Joints and Headers provided by MITSUBISHI ELECTRIC CORP..
There are 3 sets of Headers selectable for piping. Details for applying the Header sets are referable to System Design 3, or their own Installation Manual.

CMY-Y104-G

mm

For Gas pipe:

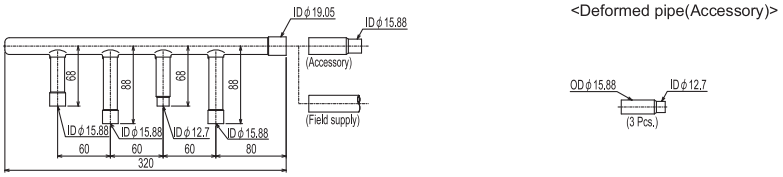

For Liquid pipe:

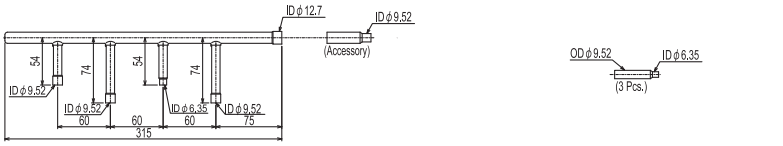

ID: Inner Diameter OD: Outer Diameter
NOTE: Besides above mentioned accessories, caps for pipe of φ6.35, φ9.52, φ12.7, φ15.88 (each diameter 1 piece) are included in the Header set.

CMY-Y108-G

mm

For Gas pipe:

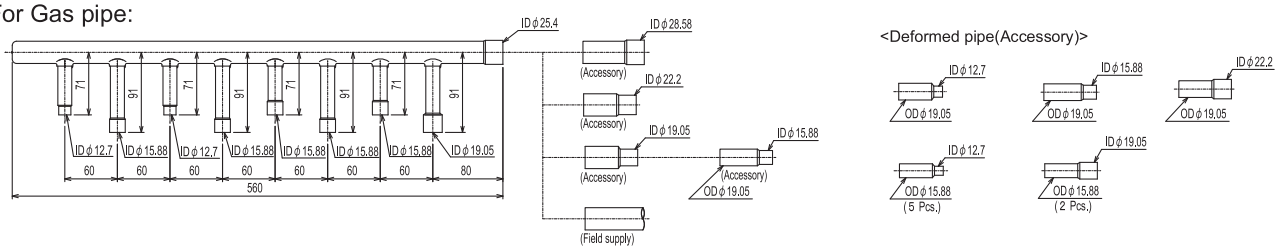

For Liquid pipe:

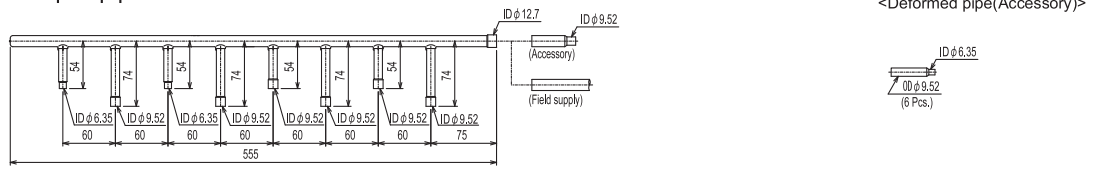

ID: Inner Diameter OD: Outer Diameter
NOTE: Besides above mentioned accessories, caps for pipe of φ6.35, φ9.52, φ12.7, φ15.88 (each diameter 2 pieces) and 1 cap for pipe of φ19.05 are included in the Header set.

CMY-Y1010-G

mm

For Gas pipe:

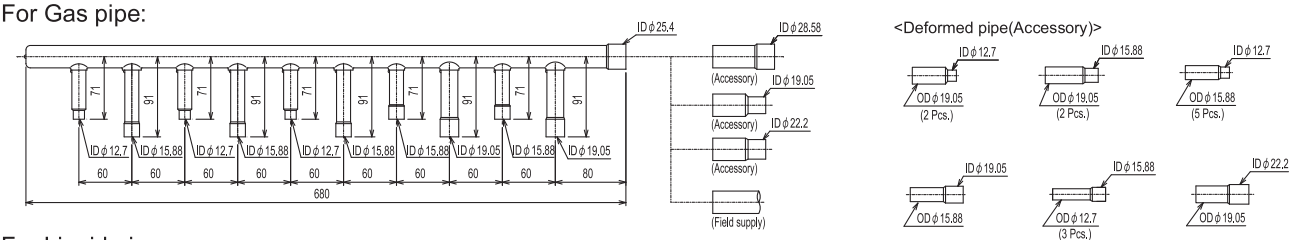

For Liquid pipe:

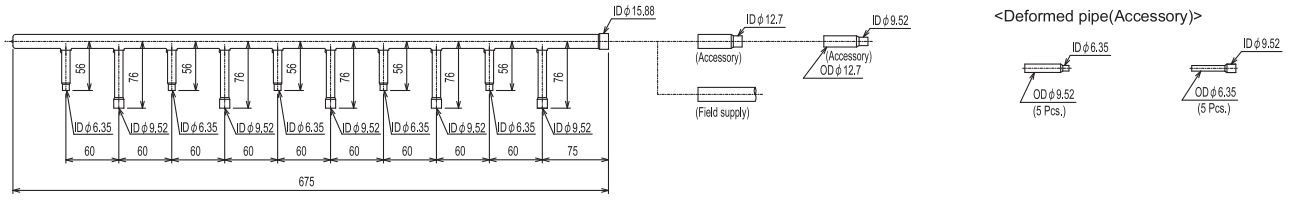

ID: Inner Diameter OD: Outer Diameter
NOTE: Besides above mentioned accessories, caps for pipe of φ6.35, φ9.52, φ12.7, φ15.88 (each diameter 2 pieces) and 1 cap for pipe of φ19.05 are included in the Header set.

8-3. OUTDOOR TWINNING KIT

For PQHY-P-YSHM, following optional Outdoor Twinning Kit is needed to use to combine to refrigerant flows of its PQHY-P-YHM. Details of selecting the proper kit should be referred to the System Design Section.

CMY-Y100VBK2

mm

For Gas pipe:

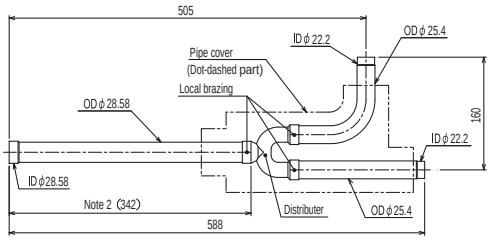

For Liquid pipe:

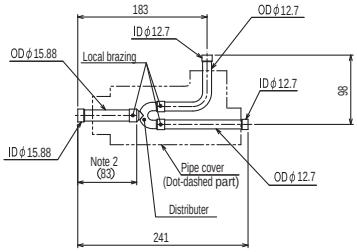

<Deformed pipe(Accessory)>

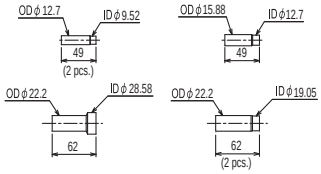

ID: Inner Diameter OD: Outer Diameter

CMY-Y300VBK2

Ref.: CMY_Y300VBK2_EXD_EUDB_SI

mm

For Gas pipe:

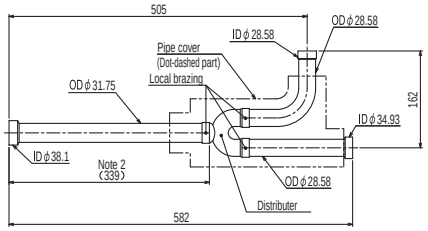

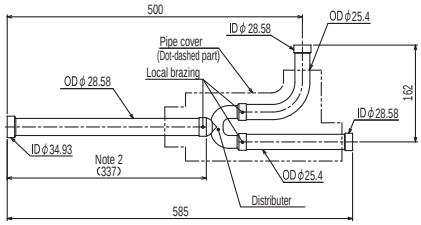

For Liquid pipe:

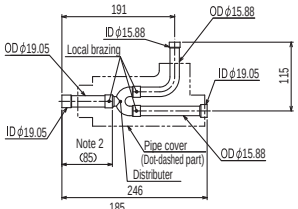

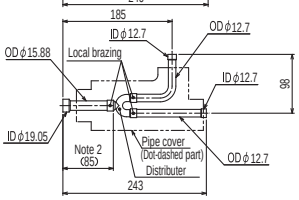

<Deformed pipe(Accessory)>

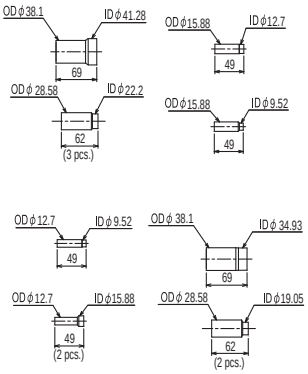

ID: Inner Diameter OD: Outer Diameter

Note 1. Reference the attitude angle of the branch pipe below the fig.

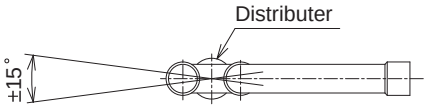

The angle of the branch pipe is within ±15° against the horizontal plane.

2. Use the attached pipe to braze the port-opening of the distributer.
3. Pipe diameter is indicated by inside diameter.

HEAT SOURCE UNITS

1. SPECIFICATIONS ..... 2 - 296
2. EXTERNAL DIMENSIONS ..... 2 - 303
3. CENTER OF GRAVITY ..... 2 - 305
4. ELECTRICAL WIRING DIAGRAMS ..... 2 - 306
5. SOUND LEVELS ..... 2 - 307
6. CAPACITY TABLES ..... 2 - 309
   6-1. Correction by temperature ..... 2 - 309
   6-2. Correction by total indoor ..... 2 - 317
   6-3. Correction by refrigerant piping length ..... 2 - 321
   6-4. Correction by port counts of the BC controller ..... 2 - 322
   6-5. Operation temperature range ..... 2 - 323
7. SYSTEM DESIGN GUIDE ..... 2 - 324
   7-1. Designing of water circuit system ..... 2 - 324
   7-2. Water piping work ..... 2 - 336
8. OPTIONAL PARTS ..... 2 - 338
   8-1. JOINT ..... 2 - 338
   8-2. OUTDOOR TWINNING KIT ..... 2 - 339
   8-3. JOINT KIT "CMY-R160-J1" FOR BC CONTROLLER ..... 2 - 340

1. SPECIFICATIONS

Model			PQRY-P200YHM-A	PQRY-P250YHM-A
Power source			3-phase 4-wire 380-400-415V 50/60Hz	3-phase 4-wire 380-400-415V 50/60Hz
Cooling capacity (Nominal)	*1	kW	22.4	28.0
	*1	kcal / h	19,300	24,100
	*1	BTU / h	76,400	95,500
	Power input	kW	3.96	5.51
	Current input	A	6.6-6.3-6.1	9.3-8.8-8.5
	COP	kW / kW	5.65	5.08
Temp. range of cooling	Indoor	W.B.	15.0 ~ 24.0°C(59 ~ 75°F)	15.0 ~ 24.0°C(59 ~ 75°F)
	Circulating water	°C	10.0 ~ 45.0°C(50 ~ 113°F)	10.0 ~ 45.0°C(50 ~ 113°F)
Heating capacity (Nominal)	*2	kW	25.0	31.5
	*2	kcal / h	21,500	27,100
	*2	BTU / h	85,300	107,500
	Power input	kW	4.12	5.80
	Current input	A	6.9-6.6-6.3	9.7-9.3-8.9
	COP	kW / kW	6.06	5.43
Temp. range of heating	Indoor	D.B.	15.0 ~ 27.0°C(59 ~ 81°F)	15.0 ~ 27.0°C(59 ~ 81°F)
	Circulating water	°C	10.0 ~ 45.0°C(50 ~ 113°F)	10.0 ~ 45.0°C(50 ~ 113°F)
Indoor unit connectable	Total capacity		50 ~ 150 % of heat source unit capacity	50 ~ 150 % of heat source unit capacity
	Model / Quantity		P15 ~ P250 / 1 ~ 20	P15 ~ P250 / 1 ~ 25
Sound pressure level (measured in anechoic room)		dB <A>	47	49
Refrigerant piping diameter	High pressure	mm (in.)	15.88(5/8) Brazed	19.05(3/4) Brazed
	Low pressure	mm (in.)	19.05(3/4) Brazed	22.2(7/8) Brazed
Circulating water	Water flow rate	m^3 / h	5.76	5.76
		L / min	96	96
		cfm	3.4	3.4
	Pressure drop	kPa	17	17
	Operating volume range	m^3 / h	4.5 ~ 7.2	4.5 ~ 7.2
Compressor	Type x Quantity		Inverter scroll hermetic compressor	Inverter scroll hermetic compressor
	Manufacture		AC&R Works, MITSUBISHI ELECTRIC CORPORATION	AC&R Works, MITSUBISHI ELECTRIC CORPORATION
	Starting method		Inverter	Inverter
	Motor output	kW	4.6	6.3
	Case heater	kW	0.035(240 V)	0.035(240 V)
	Lubricant		MEL32	MEL32
External finish			Acrylic painted steel plate	Acrylic painted steel plate
External dimension HxWxD		mm	1,160(1,100 without legs) x 880 x 550	1,160(1,100 without legs) x 880 x 550
		in.	45-11/16(43-5/16 without legs) x 34-11/16 x 21-11/16	45-11/16(43-5/16 without legs) x 34-11/16 x 21-11/16
Protection devices	High pressure protection		High pressure sensor, High pressure switch at 4.15MPa (601 psi)	High pressure sensor, High pressure switch at 4.15MPa (601 psi)
	Inverter circuit (COMP.)		Over-heat protection, Over-current protection	Over-heat protection, Over-current protection
	Compressor		Over-heat protection	Over-heat protection
Refrigerant	Type x original charge		R410A x 5.0kg (12lbs)	R410A x 5.0kg (12lbs)
	Control		Indoor LEV and BC controller	Indoor LEV and BC controller
Net weight		kg (lbs)	181(400)	181(400)
Heat exchanger			plate type	plate type
	Water volume in plate	l	5.0	5.0
	Water pressure Max.	MPa	1.0	1.0
HIC circuit (HIC: Heat Inter-Changer)			-	-
Drawing	External		KB94T146	KB94T146
	Wiring		KE94C302	KE94C302
Standard attachment	Document		Installation Manual	Installation Manual
	Accessory		Refrigerant conn. pipe	Refrigerant conn. pipe
Optional parts			Joint: CMY-Y102S-G2,CMY-Y102L-G2,CMY-Y202-G2, CMY-R160-J1 BC controller: CMB-P104, 105, 106, 108, 1010, 1013, 1016V-G1 Main BC controller: CMB-P108,1010,1013,1016V-GA1 Sub BC controller: CMB-P104,108V-GB1,CMB-P1016V-HB1	Joint: CMY-Y102S-G2,CMY-Y102L-G2,CMY-Y202-G2, CMY-R160-J1 BC controller: CMB-P104, 105, 106, 108, 1010, 1013, 1016V-G1 Main BC controller: CMB-P108,1010,1013,1016V-GA1 Sub BC controller: CMB-P104,108V-GB1,CMB-P1016V-HB1
Remarks	●.Details on foundation work, duct work, insulation work, electrical wiring, power source switch, and other items shall be referred to the Installation Manual. ●.Due to continuing improvement, above specifications may be subject to change without notice. ●.The ambient temperature of the heat source unit needs to be kept below 40°C D.B. ●.The ambient relative humidity of the heat source unit needs to be kept below 80%. ●.The heat source Unit should not be installed at outdoor. ●.Be sure to mount a strainer (more than 50 meshes) at the water inlet piping of the unit. ●.Be sure to provide interlocking for the unit operation and water circuit.			

Notes :

1.Nominal cooling conditions(subject to JIS B8615-1)
Indoor:27°CDB/19°CWB(81°FDB/66°FWB), Water temperature:30°C(86°F)
Pipe length:7.5m(24-9/16ft.), Level difference:0m(0ft.)

2.Nominal heating conditions(subject to JIS B8615-1)
Indoor:20°CDB(68°FDB), Water temperature:20°C(68°F)
Pipe length:7.5m(24-9/16ft.), Level difference:0m(0ft.)

Unit converter	
kcal	=kW x 860
BTU/h	=kW x 3,412
cfm	=m^3/min x 35.31
lbs	=kg / 0.4536

*The specification data is subject to rounding variation.

WR2

1. SPECIFICATIONS

Model			**PQRY-P300YHM-A**
Power source			3-phase 4-wire 380-400-415V 50/60Hz
Cooling capacity (Nominal)	*1	kW	33.5
	*1	kcal / h	28,800
	*1	BTU / h	114,300
	Power input	kW	7.44
	Current input	A	12.5-11.9-11.5
	COP	kW / kW	4.50
Temp. range of cooling	Indoor	W.B.	15.0 ~ 24.0°C(59 ~ 75°F)
	Circulating water	°C	10.0 ~ 45.0°C(50 ~ 113°F)
Heating capacity (Nominal)	*2	kW	37.5
	*2	kcal / h	32,300
	*2	BTU / h	128,000
	Power input	kW	8.15
	Current input	A	13.7-13.0-12.5
	COP	kW / kW	4.60
Temp. range of heating	Indoor	D.B.	15.0 ~ 27.0°C(59 ~ 81°F)
	Circulating water	°C	10.0 ~ 45.0°C(50 ~ 113°F)
Indoor unit connectable	Total capacity		50 ~ 150 % of heat source unit capacity
	Model / Quantity		P15 ~ P250 / 1 ~ 30
Sound pressure level (measured in anechoic room)		dB <A>	50
Refrigerant piping diameter	High pressure	mm (in.)	19.05(3/4) Brazed
	Low pressure	mm (in.)	22.2(7/8) Brazed
Circulating water	Water flow rate	m^3 / h	5.76
		L / min	96
		cfm	3.4
	Pressure drop	kPa	17
	Operating volume range	m^3 / h	4.5 ~ 7.2
Compressor	Type x Quantity		Inverter scroll hermetic compressor
	Manufacture		AC&R Works, MITSUBISHI ELECTRIC CORPORATION
	Starting method		Inverter
	Motor output	kW	7.4
	Case heater	kW	0.035(240 V)
	Lubricant		MEL32
External finish			Acrylic painted steel plate
External dimension HxWxD		mm	1,160(1,100 without legs) x 880 x 550
		in.	45-11/16(43-5/16 without legs) x 34-11/16 x 21-11/16
Protection devices	High pressure protection		High pressure sensor, High pressure switch at 4.15MPa (601 psi)
	Inverter circuit (COMP.)		Over-heat protection, Over-current protection
	Compressor		Over-heat protection
Refrigerant	Type x original charge		R410A x 5.0kg (12lbs)
	Control		Indoor LEV and BC controller
Net weight		kg (lbs)	181(400)
Heat exchanger			plate type
	Water volume in plate	l	5.0
	Water pressure Max.	MPa	1.0
HIC circuit (HIC: Heat Inter-Changer)			-
Drawing	External		KB94T146
	Wiring		KE94C302
Standard attachment	Document		Installation Manual
	Accessory		Refrigerant conn. pipe
Optional parts			Joint: CMY-Y102S-G2,CMY-Y102L-G2,CMY-Y202-G2,CMY-R160-J1 BC controller: CMB-P104, 105, 106, 108, 1010, 1013, 1016V-G1 Main BC controller: CMB-P108,1010,1013,1016V-GA1 Sub BC controller: CMB-P104,108V-GB1,CMB-P1016V-HB1
Remarks	●.Details on foundation work, duct work, insulation work, electrical wiring, power source switch, and other items shall be referred to the Installation Manual. ●.Due to continuing improvement, above specifications may be subject to change without notice. ●.The ambient temperature of the heat source unit needs to be kept below 40°C D.B. ●.The ambient relative humidity of the heat source unit needs to be kept below 80%. ●.The heat source Unit should not be installed at outdoor. ●.Be sure to mount a strainer (more than 50 meshes) at the water inlet piping of the unit. ●.Be sure to provide interlocking for the unit operation and water circuit.			

Notes :

1.Nominal cooling conditions(subject to JIS B8615-1)
Indoor:27°CDB/19°CWB(81°FDB/66°FWB), Water temperature:30°C(86°F)
Pipe length:7.5m(24-9/16ft.), Level difference:0m(0ft.)

2.Nominal heating conditions(subject to JIS B8615-1)
Indoor:20°CDB(68°FDB), Water temperature:20°C(68°F)
Pipe length:7.5m(24-9/16ft.), Level difference:0m(0ft.)

Unit converter	
kcal	=kW x 860
BTU/h	=kW x 3,412
cfm	=m^3/min x 35.31
lbs	=kg / 0.4536

*The specification data is subject to rounding variation.

WR2

1. SPECIFICATIONS

Model			PQRY-P400YSHM-A
Power source			3-phase 4-wire 380-400-415V 50/60Hz
Cooling capacity (Nominal)	*1	kW	45.0
	*1	kcal / h	38,700
	*1	BTU / h	153,500
	Power input	kW	8.32
	Current input	A	14.0-13.3-12.8
	COP	kW / kW	5.40
Temp. range of cooling	Indoor	W.B.	15.0 ~ 24.0°C(59 ~ 75°F)
	Circulating water	°C	10.0 ~ 45.0°C(50 ~ 113°F)
Heating capacity (Nominal)	*2	kW	50.0
	*2	kcal / h	43,000
	*2	BTU / h	170,600
	Power input	kW	8.65
	Current input	A	14.6-13.8-13.3
	COP	kW / kW	5.78
Temp. range of heating	Indoor	D.B.	15.0 ~ 27.0°C(59 ~ 81°F)
	Circulating water	°C	10.0 ~ 45.0°C(50 ~ 113°F)
Indoor unit connectable	Total capacity		50 ~ 150 % of heat source unit capacity
	Model / Quantity		P15 ~ P250 / 1 ~ 40
Sound pressure level (measured in anechoic room)		dB <A>	50
Refrigerant piping diameter	High pressure	mm (in.)	22.2(7/8) Brazed
	Low pressure	mm (in.)	28.58(1-1/8) Brazed

Set Model

Model			PQRY-P200YHM-A	PQRY-P200YHM-A
Circulating water	Water flow rate	m^3 / h	5.76 + 5.76	
		L / min	96 + 96	
		cfm	3.4 + 3.4	
	Pressure drop	kPa	17	17
	Operating volume range	m^3 / h	4.5 + 4.5 ~ 7.2 + 7.2	
Compressor	Type x Quantity		Inverter scroll hermetic compressor	Inverter scroll hermetic compressor
	Manufacture		AC&R Works, MITSUBISHI ELECTRIC CORPORATION	AC&R Works, MITSUBISHI ELECTRIC CORPORATION
	Starting method		Inverter	Inverter
	Motor output	kW	4.6	4.6
	Case heater	kW	0.035(240 V)	0.035(240 V)
	Lubricant		MEL32	MEL32
External finish			Acrylic painted steel plate	Acrylic painted steel plate
External dimension HxWxD		mm	1,160(1,100 without legs) x 880 x 550	1,160(1,100 without legs) x 880 x 550
		in.	45-11/16(43-5/16 without legs) x 34-11/16 x 21-11/16	45-11/16(43-5/16 without legs) x 34-11/16 x 21-11/16
Protection devices	High pressure protection		High pressure sensor, High pressure switch at 4.15MPa (601 psi)	High pressure sensor, High pressure switch at 4.15MPa (601 psi)
	Inverter circuit (COMP.)		Over-heat protection, Over-current protection	Over-heat protection, Over-current protection
	Compressor		Over-heat protection	Over-heat protection
Refrigerant	Type x original charge		R410A x 5.0kg (12lbs)	R410A x 5.0kg (12lbs)
	Control		Indoor LEV and BC controller	
Net weight		kg (lbs)	181(400)	181(400)
Heat exchanger			plate type	plate type
	Water volume in plate	l	5.0	5.0
	Water pressure Max.	MPa	1.0	1.0
HIC circuit (HIC: Heat Inter-Changer)			-	-
Pipe between unit and disrributor	High pressure	mm (in.)	19.05(3/4) Brazed	19.05(3/4) Brazed
	Low pressure	mm (in.)	-	22.2(7/8) Brazed
Drawing	External		KB94T147	
	Wiring		KE94C302	KE94C302
Standard attachment	Document		Installation Manual	
	Accessory		Refrigerant conn. pipe	
Optional parts			Heat Source Twinning kit: CMY-Q100VBK Joint: CMY-Y102S-G2,CMY-Y102L-G2,CMY-Y202-G2,CMY-R160-J1 Main BC controller: CMB-P108,1010,1013,1016V-GA1 Sub BC controller: CMB-P104,108V-GB1,CMB-P1016V-HB1	

Remarks
- ●.Details on foundation work, duct work, insulation work, electrical wiring, power source switch, and other items shall be referred to the Installation Manual.
- ●.Due to continuing improvement, above specifications may be subject to change without notice.
- ●.The ambient temperature of the heat source unit needs to be kept below 40°C D.B.
- ●.The ambient relative humidity of the heat source unit needs to be kept below 80%.
- ●.The heat source Unit should not be installed at outdoor.
- ●.Be sure to mount a strainer (more than 50 meshes) at the water inlet piping of the unit.
- ●.Be sure to provide interlocking for the unit operation and water circuit.
- ●.The heat source twinning kit(low pressure) should be connected to the low pressure side of the heat source unit.
  If the connected units are of different capacities, the heat source twinning kit(low pressure) should be installed in the unit with the largest capacity.

Notes :

1.Nominal cooling conditions(subject to JIS B8615-1)
Indoor:27°CDB/19°CWB(81°FDB/66°FWB), Water temperature:30°C(86°F)
Pipe length:7.5m(24-9/16ft.), Level difference:0m(0ft.)

2.Nominal heating conditions(subject to JIS B8615-1)
Indoor:20°CDB(68°FDB), Water temperature:20°C(68°F)
Pipe length:7.5m(24-9/16ft.), Level difference:0m(0ft.)

Unit converter	
kcal	=kW x 860
BTU/h	=kW x 3,412
cfm	=m^3/min x 35.31
lbs	=kg / 0.4536

*The specification data is subject to rounding variation.

WR2

1. SPECIFICATIONS

Model			PQRY-P450YSHM-A
Power source			3-phase 4-wire 380-400-415V 50/60Hz
Cooling capacity (Nominal)	*1	kW	50.0
	*1	kcal / h	43,000
	*1	BTU / h	170,600
	Power input	kW	9.94
	Current input	A	16.7-15.9-15.3
	COP	kW / kW	5.03
Temp. range of cooling	Indoor	W.B.	15.0 ~ 24.0°C(59 ~ 75°F)
	Circulating water	°C	10.0 ~ 45.0°C(50 ~ 113°F)
Heating capacity (Nominal)	*2	kW	56.0
	*2	kcal / h	48,200
	*2	BTU / h	191,100
	Power input	kW	10.42
	Current input	A	17.5-16.7-16.1
	COP	kW / kW	5.37
Temp. range of heating	Indoor	D.B.	15.0 ~ 27.0°C(59 ~ 81°F)
	Circulating water	°C	10.0 ~ 45.0°C(50 ~ 113°F)
Indoor unit connectable	Total capacity		50 ~ 150 % of heat source unit capacity
	Model / Quantity		P15 ~ P250 / 1 ~ 45
Sound pressure level (measured in anechoic room)		dB <A>	51
Refrigerant piping diameter	High pressure	mm (in.)	22.2(7/8) Brazed
	Low pressure	mm (in.)	28.58(1-1/8) Brazed

Set Model

Model			PQRY-P250YHM-A	PQRY-P200YHM-A
Circulating water	Water flow rate	m^3 / h	5.76 + 5.76	
		L / min	96 + 96	
		cfm	3.4 + 3.4	
	Pressure drop	kPa	17	17
	Operating volume range	m^3 / h	4.5 + 4.5 ~ 7.2 + 7.2	
Compressor	Type x Quantity		Inverter scroll hermetic compressor	Inverter scroll hermetic compressor
	Manufacture		AC&R Works, MITSUBISHI ELECTRIC CORPORATION	AC&R Works, MITSUBISHI ELECTRIC CORPORATION
	Starting method		Inverter	Inverter
	Motor output	kW	6.3	4.6
	Case heater	kW	0.035(240 V)	0.035(240 V)
	Lubricant		MEL32	MEL32
External finish			Acrylic painted steel plate	Acrylic painted steel plate
External dimension HxWxD		mm	1,160(1,100 without legs) x 880 x 550	1,160(1,100 without legs) x 880 x 550
		in.	45-11/16(43-5/16 without legs) x 34-11/16 x 21-11/16	45-11/16(43-5/16 without legs) x 34-11/16 x 21-11/16
Protection devices	High pressure protection		High pressure sensor, High pressure switch at 4.15MPa (601 psi)	High pressure sensor, High pressure switch at 4.15MPa (601 psi)
	Inverter circuit (COMP.)		Over-heat protection, Over-current protection	Over-heat protection, Over-current protection
	Compressor		Over-heat protection	Over-heat protection
Refrigerant	Type x original charge		R410A x 5.0kg (12lbs)	R410A x 5.0kg (12lbs)
	Control		Indoor LEV and BC controller	
Net weight		kg (lbs)	181(400)	181(400)
Heat exchanger			plate type	plate type
	Water volume in plate	l	5.0	5.0
	Water pressure Max.	MPa	1.0	1.0
HIC circuit (HIC: Heat Inter-Changer)			-	-
Pipe between unit and disrributor	High pressure	mm (in.)	19.05(3/4) Brazed	19.05(3/4) Brazed
	Low pressure	mm (in.)	-	22.2(7/8) Brazed
Drawing	External		KB94T147	
	Wiring		KE94C302	KE94C302
Standard attachment	Document		Installation Manual	
	Accessory		Refrigerant conn. pipe	
Optional parts			Heat Source Twinning kit: CMY-Q100VBK Joint: CMY-Y102S-G2,CMY-Y102L-G2,CMY-Y202-G2,CMY-R160-J1 Main BC controller: CMB-P108,1010,1013,1016V-GA1 Sub BC controller: CMB-P104,108V-GB1,CMB-P1016V-HB1	

Remarks

- ●.Details on foundation work, duct work, insulation work, electrical wiring, power source switch, and other items shall be referred to the Installation Manual.
- ●.Due to continuing improvement, above specifications may be subject to change without notice.
- ●.The ambient temperature of the heat source unit needs to be kept below 40°C D.B.
- ●.The ambient relative humidity of the heat source unit needs to be kept below 80%.
- ●.The heat source Unit should not be installed at outdoor.
- ●.Be sure to mount a strainer (more than 50 meshes) at the water inlet piping of the unit.
- ●.Be sure to provide interlocking for the unit operation and water circuit.
- ●.The heat source twinning kit(low pressure) should be connected to the low pressure side of the heat source unit.
  If the connected units are of different capacities, the heat source twinning kit(low pressure) should be installed in the unit with the largest capacity.

Notes :

1.Nominal cooling conditions(subject to JIS B8615-1)
Indoor:27°CDB/19°CWB(81°FDB/66°FWB), Water temperature:30°C(86°F)
Pipe length:7.5m(24-9/16ft.), Level difference:0m(0ft.)

2.Nominal heating conditions(subject to JIS B8615-1)
Indoor:20°CDB(68°FDB), Water temperature:20°C(68°F)
Pipe length:7.5m(24-9/16ft.), Level difference:0m(0ft.)

Unit converter	
kcal	=kW x 860
BTU/h	=kW x 3,412
cfm	=m^3/min x 35.31
lbs	=kg / 0.4536

*The specification data is subject to rounding variation.

WR2

1. SPECIFICATIONS

Model			PQRY-P500YSHM-A
Power source			3-phase 4-wire 380-400-415V 50/60Hz
Cooling capacity (Nominal)	*1	kW	56.0
	*1	kcal / h	48,200
	*1	BTU / h	191,100
	Power input	kW	11.57
	Current input	A	19.5-18.5-17.8
	COP	kW / kW	4.84
Temp. range of cooling	Indoor	W.B.	15.0 ~ 24.0°C(59 ~ 75°F)
	Circulating water	°C	10.0 ~ 45.0°C(50 ~ 113°F)
Heating capacity (Nominal)	*2	kW	63.0
	*2	kcal / h	54,200
	*2	BTU / h	215,000
	Power input	kW	12.06
	Current input	A	20.3-19.3-18.6
	COP	kW / kW	5.22
Temp. range of heating	Indoor	D.B.	15.0 ~ 27.0°C(59 ~ 81°F)
	Circulating water	°C	10.0 ~ 45.0°C(50 ~ 113°F)
Indoor unit connectable	Total capacity		50 ~ 150 % of heat source unit capacity
	Model / Quantity		P15 ~ P250 / 1 ~ 50 (Connectable branch pipe number is max. 48.)
Sound pressure level (measured in anechoic room)		dB <A>	52
Refrigerant piping diameter	High pressure	mm (in.)	22.2(7/8) Brazed
	Low pressure	mm (in.)	28.58(1-1/8) Brazed

Set Model

Model			PQRY-P250YHM-A	PQRY-P250YHM-A
Circulating water	Water flow rate	m^3 / h	5.76 + 5.76	
		L / min	96 + 96	
		cfm	3.4 + 3.4	
	Pressure drop	kPa	17	17
	Operating volume range	m^3 / h	4.5 + 4.5 ~ 7.2 + 7.2	
Compressor	Type x Quantity		Inverter scroll hermetic compressor	Inverter scroll hermetic compressor
	Manufacture		AC&R Works, MITSUBISHI ELECTRIC CORPORATION	AC&R Works, MITSUBISHI ELECTRIC CORPORATION
	Starting method		Inverter	Inverter
	Motor output	kW	6.3	6.3
	Case heater	kW	0.035(240 V)	0.035(240 V)
	Lubricant		MEL32	MEL32
External finish			Acrylic painted steel plate	Acrylic painted steel plate
External dimension HxWxD		mm	1,160(1,100 without legs) x 880 x 550	1,160(1,100 without legs) x 880 x 550
		in.	45-11/16(43-5/16 without legs) x 34-11/16 x 21-11/16	45-11/16(43-5/16 without legs) x 34-11/16 x 21-11/16
Protection devices	High pressure protection		High pressure sensor, High pressure switch at 4.15MPa (601 psi)	High pressure sensor, High pressure switch at 4.15MPa (601 psi)
	Inverter circuit (COMP.)		Over-heat protection, Over-current protection	Over-heat protection, Over-current protection
	Compressor		Over-heat protection	Over-heat protection
Refrigerant	Type x original charge		R410A x 5.0kg (12lbs)	R410A x 5.0kg (12lbs)
	Control		Indoor LEV and BC controller	
Net weight		kg (lbs)	181(400)	181(400)
Heat exchanger			plate type	plate type
	Water volume in plate	l	5.0	5.0
	Water pressure Max.	MPa	1.0	1.0
HIC circuit (HIC: Heat Inter-Changer)			-	-
Pipe between unit and disrributor	High pressure	mm (in.)	19.05(3/4) Brazed	19.05(3/4) Brazed
	Low pressure	mm (in.)	-	22.2(7/8) Brazed
Drawing	External		KB94T147	
	Wiring		KE94C302	KE94C302
Standard attachment	Document		Installation Manual	
	Accessory		Refrigerant conn. pipe	
Optional parts			Heat Source Twinning kit: CMY-Q100VBK Joint: CMY-Y102S-G2,CMY-Y102L-G2,CMY-Y202-G2,CMY-R160-J1 Main BC controller: CMB-P108,1010,1013,1016V-GA1 Sub BC controller: CMB-P104,108V-GB1,CMB-P1016V-HB1	

Remarks

- ●.Details on foundation work, duct work, insulation work, electrical wiring, power source switch, and other items shall be referred to the Installation Manual.
- ●.Due to continuing improvement, above specifications may be subject to change without notice.
- ●.The ambient temperature of the heat source unit needs to be kept below 40°C D.B.
- ●.The ambient relative humidity of the heat source unit needs to be kept below 80%.
- ●.The heat source Unit should not be installed at outdoor.
- ●.Be sure to mount a strainer (more than 50 meshes) at the water inlet piping of the unit.
- ●.Be sure to provide interlocking for the unit operation and water circuit.
- ●.The heat source twinning kit(low pressure) should be connected to the low pressure side of the heat source unit.
  If the connected units are of different capacities, the heat source twinning kit(low pressure) should be installed in the unit with the largest capacity.

Notes :

1.Nominal cooling conditions(subject to JIS B8615-1)
Indoor:27°CDB/19°CWB(81°FDB/66°FWB), Water temperature:30°C(86°F)
Pipe length:7.5m(24-9/16ft.), Level difference:0m(0ft.)

2.Nominal heating conditions(subject to JIS B8615-1)
Indoor:20°CDB(68°FDB), Water temperature:20°C(68°F)
Pipe length:7.5m(24-9/16ft.), Level difference:0m(0ft.)

Unit converter	
kcal	=kW x 860
BTU/h	=kW x 3,412
cfm	=m^3/min x 35.31
lbs	=kg / 0.4536

*The specification data is subject to rounding variation.

WR2

Model			PQRY-P550YSHM-A
Power source			3-phase 4-wire 380-400-415V 50/60Hz
Cooling capacity (Nominal)	*1	kW	63.0
	*1	kcal / h	54,200
	*1	BTU / h	215,000
	Power input	kW	13.60
	Current input	A	22.9-21.8-21.0
	COP	kW / kW	4.63
Temp. range of cooling	Indoor	W.B.	15.0 ~ 24.0°C(59 ~ 75°F)
	Circulating water	°C	10.0 ~ 45.0°C(50 ~ 113°F)
Heating capacity (Nominal)	*2	kW	69.0
	*2	kcal / h	59,300
	*2	BTU / h	235,400
	Power input	kW	14.65
	Current input	A	24.7-23.4-22.6
	COP	kW / kW	4.70
Temp. range of heating	Indoor	D.B.	15.0 ~ 27.0°C(59 ~ 81°F)
	Circulating water	°C	10.0 ~ 45.0°C(50 ~ 113°F)
Indoor unit connectable	Total capacity		50 ~ 150 % of heat source unit capacity
	Model / Quantity		P15 ~ P250 / 2 ~ 50 (Connectable branch pipe number is max. 48.)
Sound pressure level (measured in anechoic room)		dB <A>	52.5
Refrigerant piping diameter	High pressure	mm (in.)	28.58(1-1/8) Brazed
	Low pressure	mm (in.)	28.58(1-1/8) Brazed

Set Model

Model			PQRY-P300YHM-A	PQRY-P250YHM-A
Circulating water	Water flow rate	m^3 / h	5.76 + 5.76	
		L / min	96 + 96	
		cfm	3.4 + 3.4	
	Pressure drop	kPa	17	17
	Operating volume range	m^3 / h	4.5 + 4.5 ~ 7.2 + 7.2	
Compressor	Type x Quantity		Inverter scroll hermetic compressor	Inverter scroll hermetic compressor
	Manufacture		AC&R Works, MITSUBISHI ELECTRIC CORPORATION	AC&R Works, MITSUBISHI ELECTRIC CORPORATION
	Starting method		Inverter	Inverter
	Motor output	kW	7.4	6.3
	Case heater	kW	0.035(240 V)	0.035(240 V)
	Lubricant		MEL32	MEL32
External finish			Acrylic painted steel plate	Acrylic painted steel plate
External dimension HxWxD		mm	1,160(1,100 without legs) x 880 x 550	1,160(1,100 without legs) x 880 x 550
		in.	45-11/16(43-5/16 without legs) x 34-11/16 x 21-11/16	45-11/16(43-5/16 without legs) x 34-11/16 x 21-11/16
Protection devices	High pressure protection		High pressure sensor, High pressure switch at 4.15MPa (601 psi)	High pressure sensor, High pressure switch at 4.15MPa (601 psi)
	Inverter circuit (COMP.)		Over-heat protection, Over-current protection	Over-heat protection, Over-current protection
	Compressor		Over-heat protection	Over-heat protection
Refrigerant	Type x original charge		R410A x 5.0kg (12lbs)	R410A x 5.0kg (12lbs)
	Control		Indoor LEV and BC controller	
Net weight		kg (lbs)	181(400)	181(400)
Heat exchanger			plate type	plate type
	Water volume in plate	l	5.0	5.0
	Water pressure Max.	MPa	1.0	1.0
HIC circuit (HIC: Heat Inter-Changer)			-	-
Pipe between unit and disrributor	High pressure	mm (in.)	19.05(3/4) Brazed	19.05(3/4) Brazed
	Low pressure	mm (in.)	-	22.2(7/8) Brazed
Drawing	External		KB94T147	
	Wiring		KE94C302	KE94C302
Standard attachment	Document		Installation Manual	
	Accessory		Refrigerant conn. pipe	
Optional parts			Heat Source Twinning kit: CMY-Q100VBK Joint: CMY-Y102S-G2,CMY-Y102L-G2,CMY-Y202-G2,CMY-R160-J1 Main BC controller: CMB-P108,1010,1013,1016V-GA1 Sub BC controller: CMB-P104,108V-GB1,CMB-P1016V-HB1	

Remarks
- ●.Details on foundation work, duct work, insulation work, electrical wiring, power source switch, and other items shall be referred to the Installation Manual.
- ●.Due to continuing improvement, above specifications may be subject to change without notice
- ●.The ambient temperature of the heat source unit needs to be kept below 40°C D.B.
- ●.The ambient relative humidity of the heat source unit needs to be kept below 80%.
- ●.The heat source Unit should not be installed at outdoor.
- ●.Be sure to mount a strainer (more than 50 meshes) at the water inlet piping of the unit.
- ●.Be sure to provide interlocking for the unit operation and water circuit.
- ●.The heat source twinning kit(low pressure) should be connected to the low pressure side of the heat source unit.
  If the connected units are of different capacities, the heat source twinning kit(low pressure) should be installed in the unit with the largest capacity.

Notes :

1.Nominal cooling conditions(subject to JIS B8615-1)
Indoor:27°CDB/19°CWB(81°FDB/66°FWB), Water temperature:30°C(86°F)
Pipe length:7.5m(24-9/16ft.), Level difference:0m(0ft.)

2.Nominal heating conditions(subject to JIS B8615-1)
Indoor:20°CDB(68°FDB), Water temperature:20°C(68°F)
Pipe length:7.5m(24-9/16ft.), Level difference:0m(0ft.)

Unit converter	
kcal	=kW x 860
BTU/h	=kW x 3,412
cfm	=m^3/min x 35.31
lbs	=kg / 0.4536

*The specification data is subject to rounding variation.

WR2

1. SPECIFICATIONS

Model			PQRY-P600YSHM-A
Power source			3-phase 4-wire 380-400-415V 50/60Hz
Cooling capacity (Nominal)	*1	kW	69.0
	*1	kcal / h	59,300
	*1	BTU / h	235,400
	Power input	kW	15.62
	Current input	A	26.3-25.0-24.1
	COP	kW / kW	4.41
Temp. range of cooling	Indoor	W.B.	15.0 ~ 24.0°C(59 ~ 75°F)
	Circulating water	°C	10.0 ~ 45.0°C(50 ~ 113°F)
Heating capacity (Nominal)	*2	kW	76.5
	*2	kcal / h	65,800
	*2	BTU / h	261,000
	Power input	kW	17.12
	Current input	A	28.9-27.4-26.4
	COP	kW / kW	4.46
Temp. range of heating	Indoor	D.B.	15.0 ~ 27.0°C(59 ~ 81°F)
	Circulating water	°C	10.0 ~ 45.0°C(50 ~ 113°F)
Indoor unit connectable	Total capacity		50 ~ 150 % of heat source unit capacity
	Model / Quantity		P15 ~ P250 / 2 ~ 50 (Connectable branch pipe number is max. 48.)
Sound pressure level (measured in anechoic room)		dB <A>	53
Refrigerant piping diameter	High pressure	mm (in.)	28.58(1-1/8) Brazed
	Low pressure	mm (in.)	28.58(1-1/8) Brazed

Set Model

Model			PQRY-P300YHM-A	PQRY-P300YHM-A
Circulating water	Water flow rate	m^3 / h	5.76 + 5.76	
		L / min	96 + 96	
		cfm	3.4 + 3.4	
	Pressure drop	kPa	17	17
	Operating volume range	m^3 / h	4.5 + 4.5 ~ 7.2 + 7.2	
Compressor	Type x Quantity		Inverter scroll hermetic compressor	Inverter scroll hermetic compressor
	Manufacture		AC&R Works, MITSUBISHI ELECTRIC CORPORATION	AC&R Works, MITSUBISHI ELECTRIC CORPORATION
	Starting method		Inverter	Inverter
	Motor output	kW	7.4	7.4
	Case heater	kW	0.035(240 V)	0.035(240 V)
	Lubricant		MEL32	MEL32
External finish			Acrylic painted steel plate	Acrylic painted steel plate
External dimension HxWxD		mm	1,160(1,100 without legs) x 880 x 550	1,160(1,100 without legs) x 880 x 550
		in.	45-11/16(43-5/16 without legs) x 34-11/16 x 21-11/16	45-11/16(43-5/16 without legs) x 34-11/16 x 21-11/16
Protection devices	High pressure protection		High pressure sensor, High pressure switch at 4.15MPa (601 psi)	High pressure sensor, High pressure switch at 4.15MPa (601 psi)
	Inverter circuit (COMP.)		Over-heat protection, Over-current protection	Over-heat protection, Over-current protection
	Compressor		Over-heat protection	Over-heat protection
Refrigerant	Type x original charge		R410A x 5.0kg (12lbs)	R410A x 5.0kg (12lbs)
	Control		Indoor LEV and BC controller	
Net weight		kg (lbs)	181(400)	181(400)
Heat exchanger			plate type	plate type
	Water volume in plate	l	5.0	5.0
	Water pressure Max.	MPa	1.0	1.0
HIC circuit (HIC: Heat Inter-Changer)			-	-
Pipe between unit and disrributor	High pressure	mm (in.)	19.05(3/4) Brazed	19.05(3/4) Brazed
	Low pressure	mm (in.)	-	22.2(7/8) Brazed
Drawing	External		KB94T147	
	Wiring		KE94C302	KE94C302
Standard attachment	Document		Installation Manual	
	Accessory		Refrigerant conn. pipe	
Optional parts			Heat Source Twinning kit: CMY-Q100VBK Joint: CMY-Y102S-G2,CMY-Y102L-G2,CMY-Y202-G2,CMY-R160-J1 Main BC controller: CMB-P108,1010,1013,1016V-GA1 Sub BC controller: CMB-P104,108V-GB1,CMB-P1016V-HB1	

Remarks

- ●.Details on foundation work, duct work, insulation work, electrical wiring, power source switch, and other items shall be referred to the Installation Manual.
- ●.Due to continuing improvement, above specifications may be subject to change without notice.
- ●.The ambient temperature of the heat source unit needs to be kept below 40°C D.B.
- ●.The ambient relative humidity of the heat source unit needs to be kept below 80%.
- ●.The heat source Unit should not be installed at outdoor.
- ●.Be sure to mount a strainer (more than 50 meshes) at the water inlet piping of the unit.
- ●.Be sure to provide interlocking for the unit operation and water circuit.
- ●.The heat source twinning kit(low pressure) should be connected to the low pressure side of the heat source unit.
  If the connected units are of different capacities,he heat source twinning kit(low pressure) should be installed in the unit with the largest capacity.

Notes :

1.Nominal cooling conditions(subject to JIS B8615-1)
Indoor:27°CDB/19°CWB(81°FDB/66°FWB), Water temperature:30°C(86°F)
Pipe length:7.5m(24-9/16ft.), Level difference:0m(0ft.)

2.Nominal heating conditions(subject to JIS B8615-1)
Indoor:20°CDB(68°FDB), Water temperature:20°C(68°F)
Pipe length:7.5m(24-9/16ft.), Level difference:0m(0ft.)

Unit converter	
kcal	=kW x 860
BTU/h	=kW x 3,412
cfm	=m^3/min x 35.31
lbs	=kg / 0.4536

*The specification data is subject to rounding variation.

WR2

PQRY-P200, 250, 300YHM-A

Unit : mm

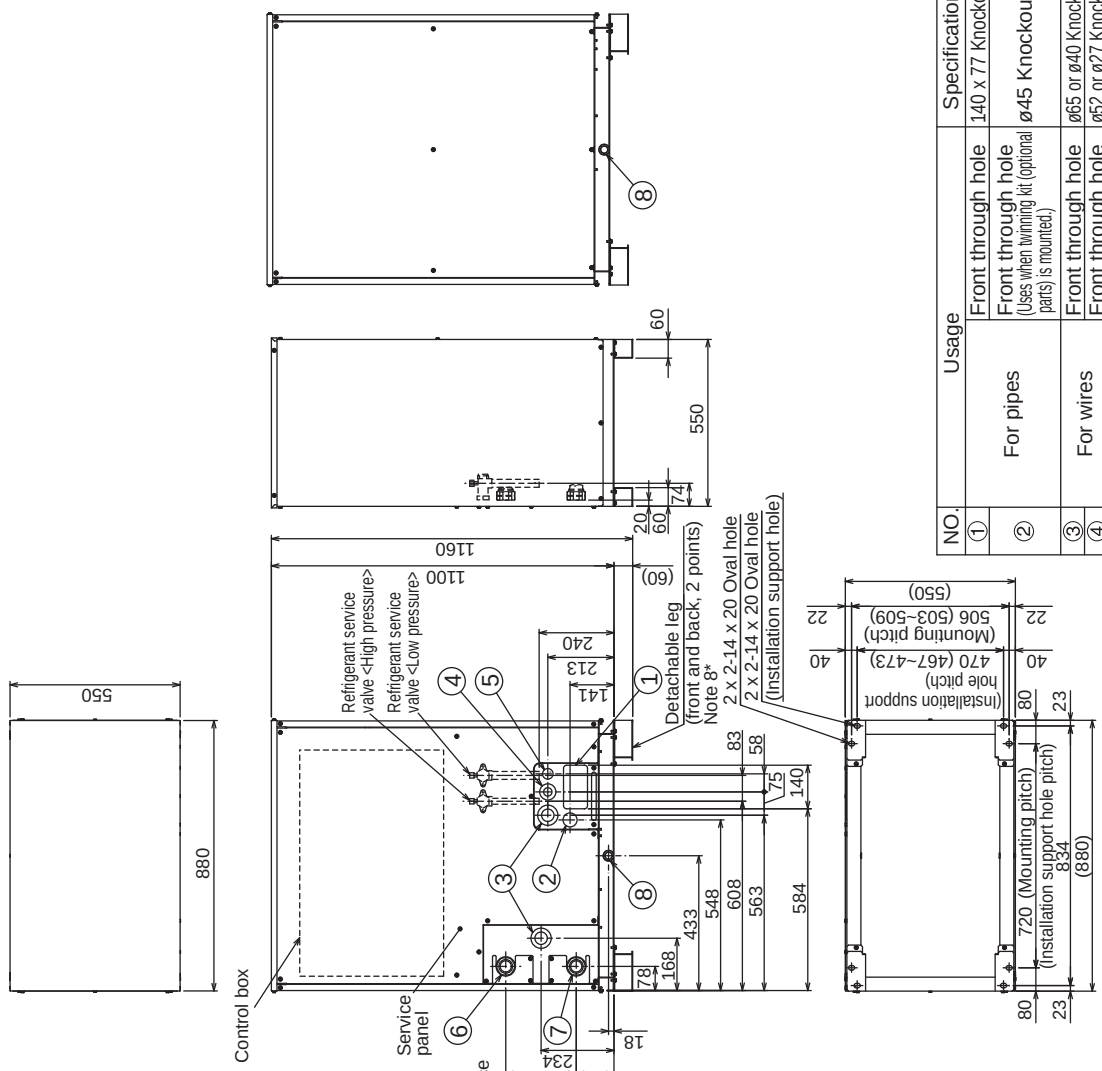

NO.	Usage		Specifications
①	For pipes	Front through hole	140 x 77 Knockout hole
②		Front through hole (Uses when twinning kit (optional parts) is mounted.)	ø45 Knockout hole
③	For wires	Front through hole	ø65 or ø40 Knockout hole
④		Front through hole	ø52 or ø27 Knockout hole
⑤	For transmission cables	Front through hole	ø34 Knockout hole
⑥	Water pipe	inlet	Rc1-1/2 Screw
⑦		outlet	Rc1-1/2 Screw
⑧	Drain pipe		Rc3/4 Screw

Note 1. Close a hole of the water piping, the refrigerant piping, the power supply, and the control wiring and unused knockout holes with the putty etc. so as not to infiltrate rain water etc. (field erection work)

Note 2. At the time of product shipment, the front side piping specification serves as the local drainage connection. When connecting on the rear side, please remove the rear side plug sealing corks, and attach a front side. Ensure there is no leak after the attachment has been fitted.

Note 3. Take notice of service space as Fig. A. (In case of single installation, 600mm or more of back space as front space makes easier access when servicing the unit from rear side)

Note 4. If water pipes or refrigerant pipes stretch upward, required space for service and maintenance due to replacement of control box is shown in Fig. B.

Note 5. Environmental condition for installation; -20~40°C (DB) as indoor installation.

Note 6. In case the temperature around the heat source unit has possibility to drop under 0°C, be careful for the following point to prevent the pipe burst by the water pipe freeze-up.
· Circulate the water all the time even if the heat source unit is not in operation.
· Drain the water from inside of the heat source unit when the heat source unit will not operate for a long term.

Note 7. Ensure that the drain piping is downward with a pitch of more than 1/100.

Note 8. The detachable leg can be removed at site.

Note 9. At brazing of pipes, wrap the refrigerant service valve with wet cloth and keep the temperature of refrigerant service valve under 120°C.

<Accessories>
·Refrigerant (high pressure) conn. pipe ·····1 pc. (P200 : Packaged in the accessory kit)
·Refrigerant (low pressure) conn. pipe ·····1 pc. (P200/P250 : Packaged in the accessory kit)

Connecting pipe specifications

Model	Connection specifications for the refrigerant service valve	
	High pressure	Low pressure
PQRY-P200YHM-A	ø15.88 Brazed*2	ø19.05 Brazed*2
PQRY-P250YHM-A	ø19.05 Brazed*1	ø22.2 Brazed *2
PQRY-P300YHM-A		

*1.Expand the field pipes and connect directly to the valve.
*2.Connect by using the connecting pipes that are supplied.

WR2

PQRY-P400,450,500,550,600YSHM-A

Unit : mm

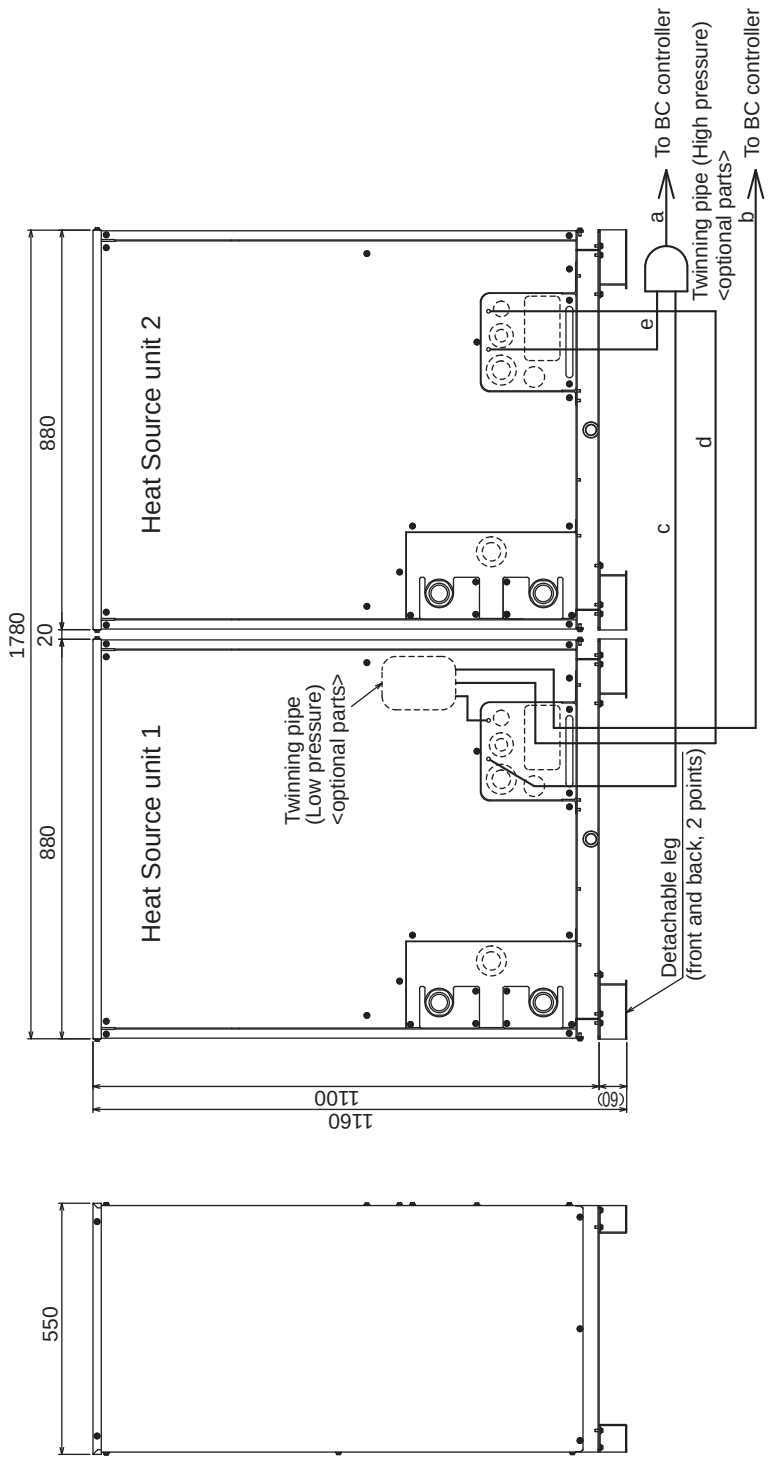

Note 1. Connect the pipes as shown in the figure above. Refer to the table below for the pipe size.
2. The detachable leg can be removed at site.
3. Twinning pipe (High pressure) should not be tilted more than 15 degrees from the ground.
4. See the Installation Manual for the details of Twinning pipe installation.

Twinning pipe connection size

Package unit name			PQRY-P400YSHM-A	PQRY-P450YSHM-A	PQRY-P500YSHM-A	PQRY-P550YSHM-A	PQRY-P600YSHM-A
Component unit name	Heat Source unit 1		PQRY-P200YHM-A	PQRY-P250YHM-A	PQRY-P250YHM-A	PQRY-P300YHM-A	PQRY-P300YHM-A
	Heat Source unit 2		PQRY-P200YHM-A	PQRY-P200YHM-A	PQRY-P250YHM-A	PQRY-P250YHM-A	PQRY-P300YHM-A
Twinning pipe Kit (optional parts)			CMY-Q100VBK				
BC controller ~ Twinning pipe	High pressure	a	ø22.2			ø28.58	
	Low pressure	b	ø28.58				

	Unit model	High pressure c or e	Low pressure d
Twinning pipe ~ Heat source unit	P200	ø19.05	ø22.2
	P250		
	P300		

WR2

PQRY-P200,250,300YHM-A(-BS)

Unit : mm[in.]

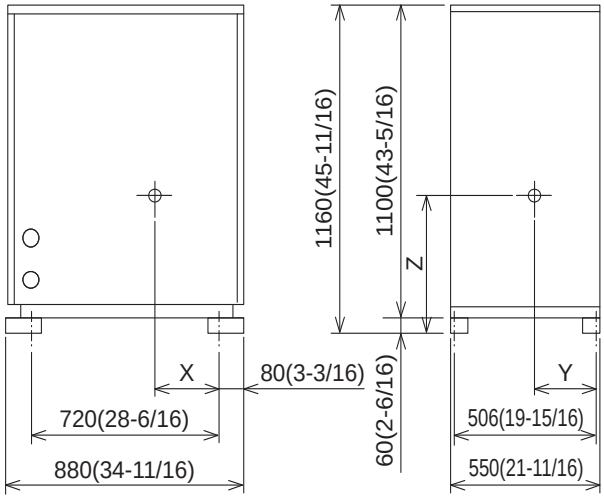

Model	X	Y	Z
PQRY-P200YHM-A(-BS)	423(16-11/16)	253(10)	524(20-11/16)
PQRY-P250YHM-A(-BS)	423(16-11/16)	253(10)	524(20-11/16)
PQRY-P300YHM-A(-BS)	423(16-11/16)	253(10)	524(20-11/16)

WR2

PQRY-P200, 250, 300YHM-A(-BS)

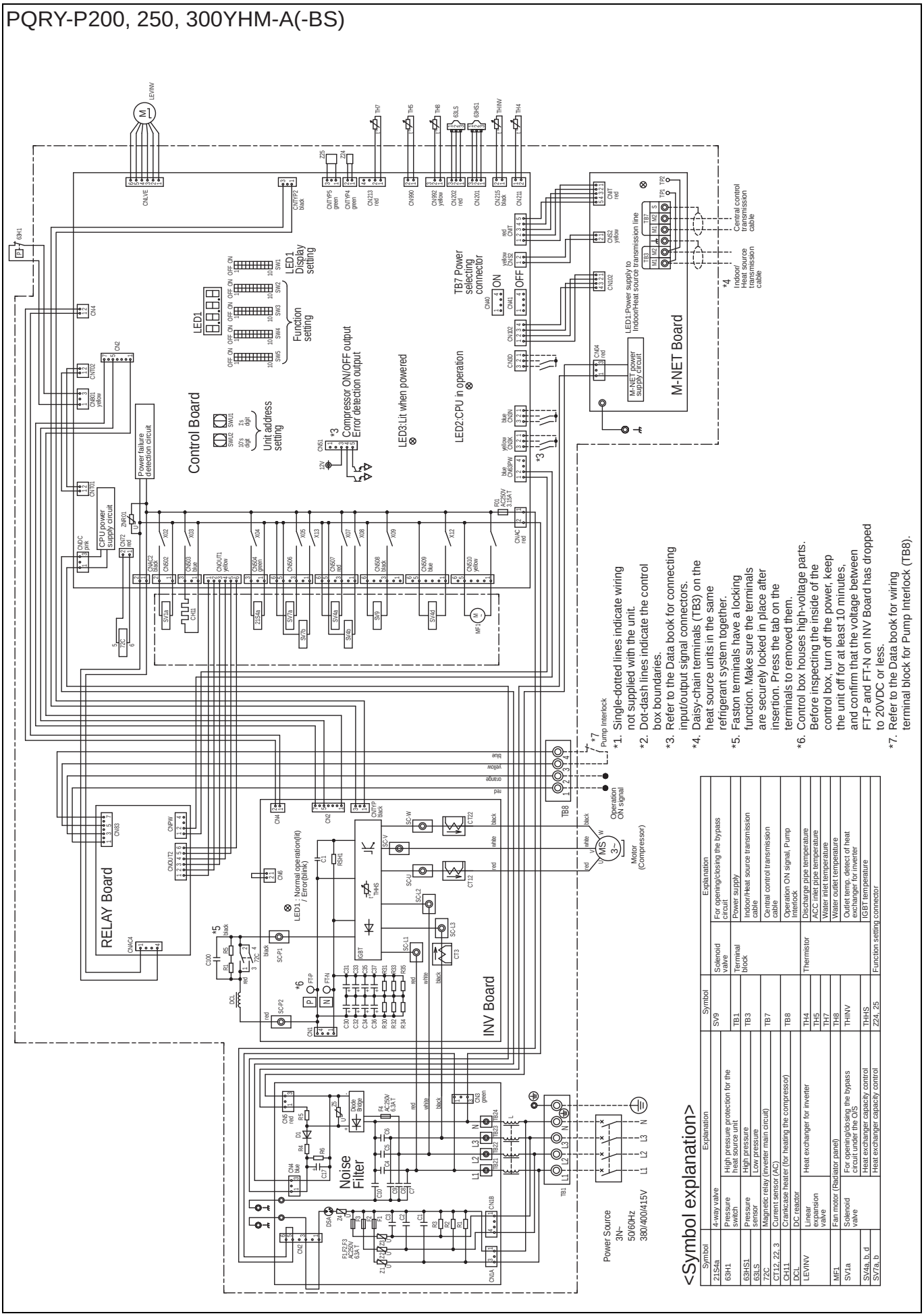

<Symbol explanation>

Symbol	Explanation	Symbol	Explanation
21S4a	4-way valve	SV9	For opening/closing the bypass circuit
63H1	Pressure switch: High pressure protection for the heat source unit	TB1	Power supply
63HS1	Pressure sensor: High pressure	TB3	Indoor/Heat source transmission cable
63LS	Low pressure	TB7	Central control transmission cable
T2C	Magnetic relay (inverter main circuit)	TB8	Operation ON signal, Pump Interlock
CT12, 22, 3	Current sensor (AC)	TH4	Discharge pipe temperature
CH11	Crankcase heater (for heating the compressor)	TH5	ACC inlet pipe temperature
DCL	DC reactor	TH7	Water inlet temperature
LEVINV	Linear expansion valve: Heat exchanger for inverter	TH8	Water outlet temperature
MF1	Fan motor (Radiator panel)	THINV	Outlet temp. detect of heat exchanger for inverter
SV1a	Solenoid valve: For opening/closing the bypass circuit under the O/S	THHS	IGBT temperature
SV4a, b, d	Heat exchanger capacity control	Z24, 25	Function setting connector
SV7a, b	Heat exchanger capacity control		

WR2

Measurement condition
PQRY-P200,250,300YHM-A

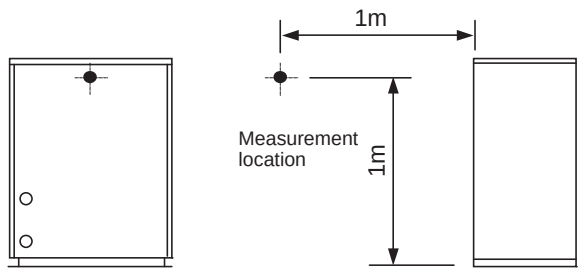

Sound level of PQRY-P300YHM-A

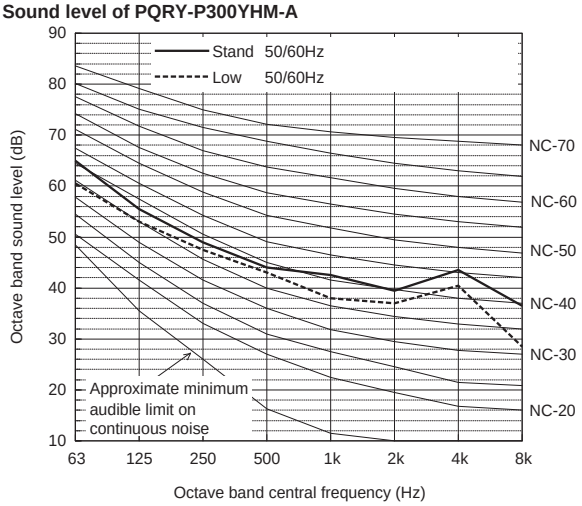

		63	125	250	500	1k	2k	4k	8k	dB(A)
Standard	50/60Hz	65.0	55.5	49.0	44.0	42.5	39.5	43.5	36.5	50.0
Low noise mode	50/60Hz	60.5	53.0	47.5	43.0	38.0	37.0	40.5	28.5	47.0

When Low noise mode is set,the A/C system's capacity is limited. The system could return to normal operation from Low noise mode automatically in the case that the operation condition is severe.

Sound level of PQRY-P200YHM-A

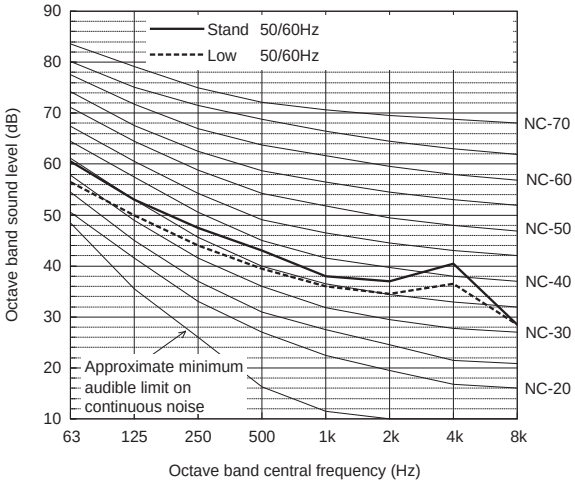

		63	125	250	500	1k	2k	4k	8k	dB(A)
Standard	50/60Hz	60.5	53.0	47.5	43.0	38.0	37.0	40.5	28.5	47.0
Low noise mode	50/60Hz	56.5	50.0	44.0	39.5	36.0	34.5	36.5	28.5	44.0

When Low noise mode is set,the A/C system's capacity is limited. The system could return to normal operation from Low noise mode automatically in the case that the operation condition is severe.

Sound level of PQRY-P250YHM-A

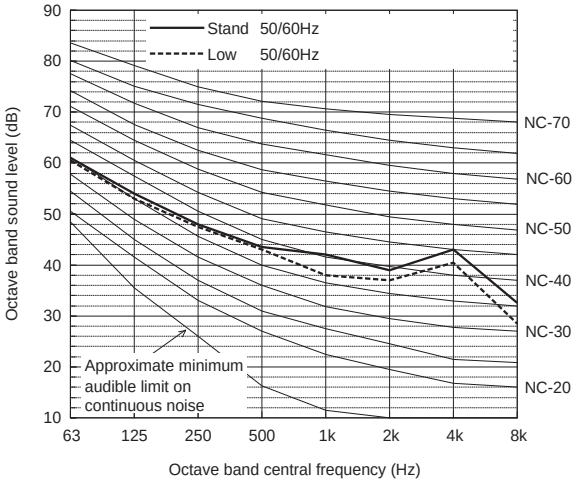

		63	125	250	500	1k	2k	4k	8k	dB(A)
Standard	50/60Hz	61.0	54.0	48.0	43.5	42.0	39.0	43.0	32.5	49.0
Low noise mode	50/60Hz	60.5	53.0	47.5	43.0	38.0	37.0	40.5	28.5	47.0

When Low noise mode is set,the A/C system's capacity is limited. The system could return to normal operation from Low noise mode automatically in the case that the operation condition is severe.

WR2

5. SOUND LEVELS

Measurement condition
PQRY-P400,450,500,550,600YSHM-A

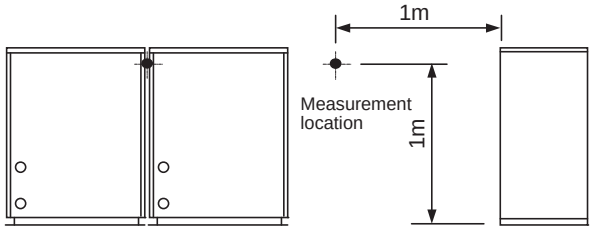

Sound level of PQRY-P500YSHM-A

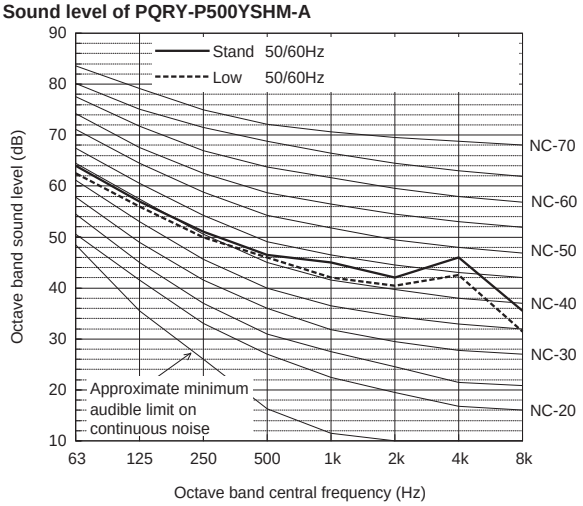

		63	125	250	500	1k	2k	4k	8k	dB(A)
Standard	50/60Hz	64.0	57.0	51.0	46.5	45.0	42.0	46.0	35.5	52.0
Low noise mode	50/60Hz	62.5	56.0	50.0	46.0	42.0	40.5	42.5	31.5	50.0

When Low noise mode is set,the A/C system's capacity is limited. The system could return to normal operation from Low noise mode automatically in the case that the operation condition is severe.

Sound level of PQRY-P400YSHM-A

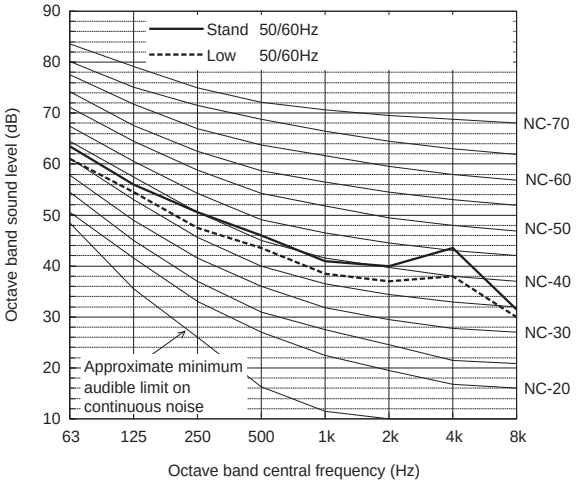

		63	125	250	500	1k	2k	4k	8k	dB(A)
Standard	50/60Hz	63.5	56.0	50.5	46.0	41.0	40.0	43.5	31.5	50.0
Low noise mode	50/60Hz	61.0	54.5	47.5	43.5	38.5	37.0	38.0	30.0	47.0

When Low noise mode is set,the A/C system's capacity is limited. The system could return to normal operation from Low noise mode automatically in the case that the operation condition is severe.

Sound level of PQRY-P550YSHM-A

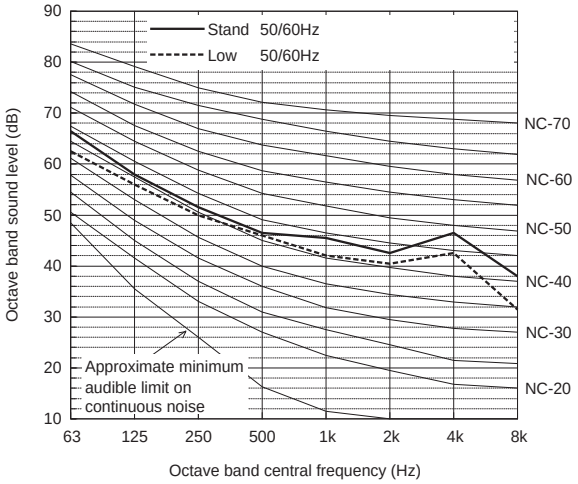

		63	125	250	500	1k	2k	4k	8k	dB(A)
Standard	50/60Hz	66.5	58.0	51.5	46.5	45.5	42.5	46.5	38.0	52.5
Low noise mode	50/60Hz	62.5	56.0	50.0	46.0	42.0	40.5	42.5	31.5	50.0

When Low noise mode is set,the A/C system's capacity is limited. The system could return to normal operation from Low noise mode automatically in the case that the operation condition is severe.

Sound level of PQRY-P450YSHM-A

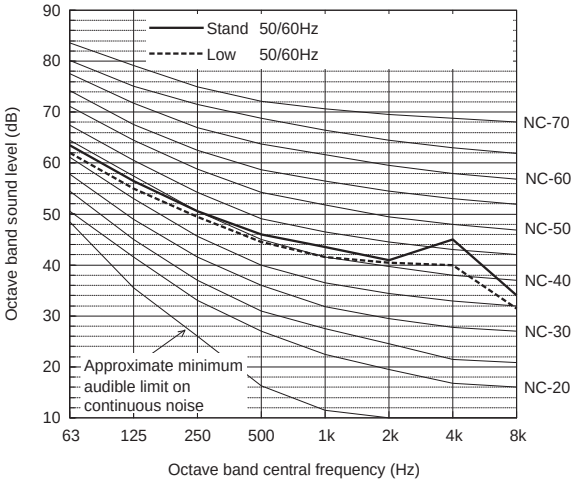

		63	125	250	500	1k	2k	4k	8k	dB(A)
Standard	50/60Hz	63.5	56.5	50.5	46.0	43.5	41.0	45.0	34.0	51.0
Low noise mode	50/60Hz	62.0	55.0	49.5	44.5	41.5	40.5	40.0	31.5	49.0

When Low noise mode is set,the A/C system's capacity is limited. The system could return to normal operation from Low noise mode automatically in the case that the operation condition is severe.

Sound level of PQRY-P600YSHM-A

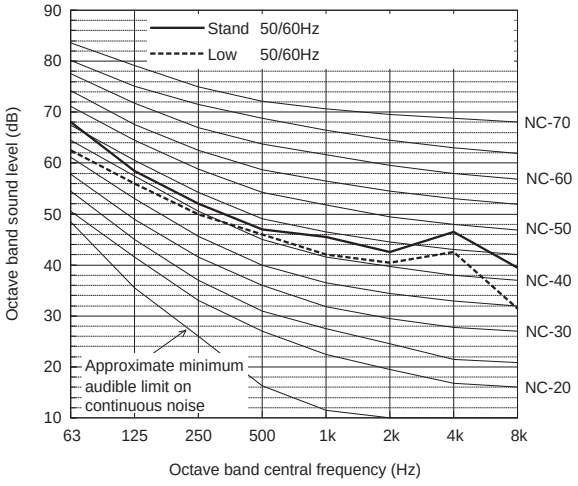

		63	125	250	500	1k	2k	4k	8k	dB(A)
Standard	50/60Hz	68.0	58.5	52.0	47.0	45.5	42.5	46.5	39.5	53.0
Low noise mode	50/60Hz	62.5	56.0	50.0	46.0	42.0	40.5	42.5	31.5	50.0

When Low noise mode is set,the A/C system's capacity is limited. The system could return to normal operation from Low noise mode automatically in the case that the operation condition is severe.

6-1. Correction by temperature

CITY MULTI could have various capacities at different designing temperatures. Using the nominal cooling/heating capacity values and the ratios below, the capacity can be found for various temperatures.

		PQHY-P200YHM-A	PQRY-P200YHM-A
Nominal Cooling Capacity	kW	22.4	22.4
	BTU/h	76,400	76,400
Input	kW	3.92	3.96

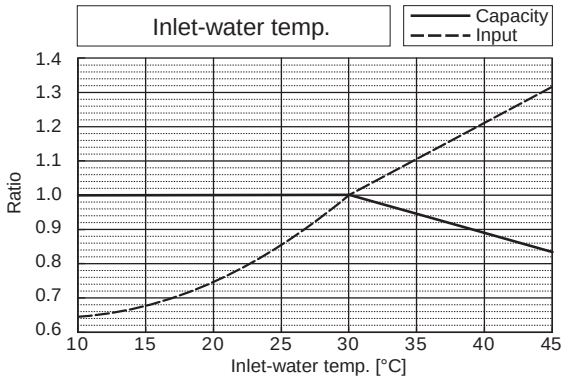

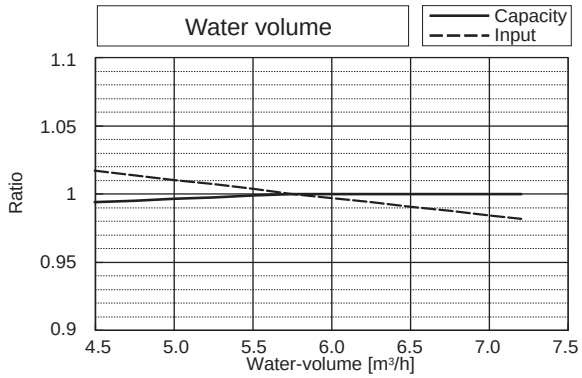

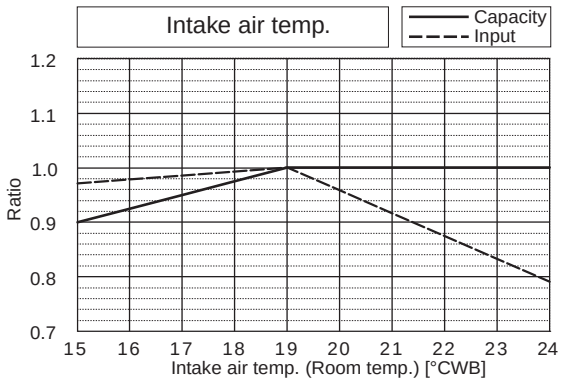

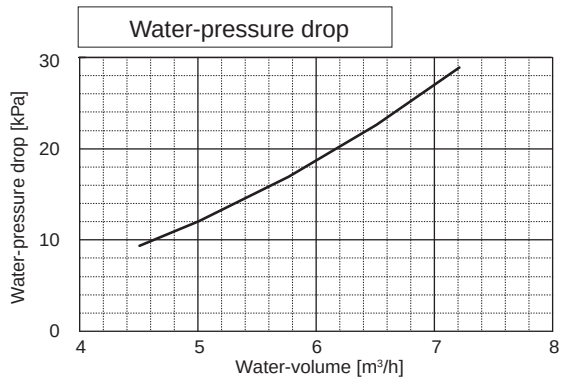

		PQHY-P200YHM-A	PQRY-P200YHM-A
Nominal Heating Capacity	kW	25.0	25.0
	BTU/h	85,300	85,300
Input	kW	4.12	4.12

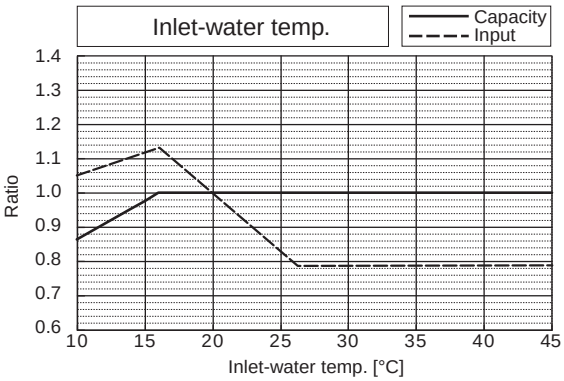

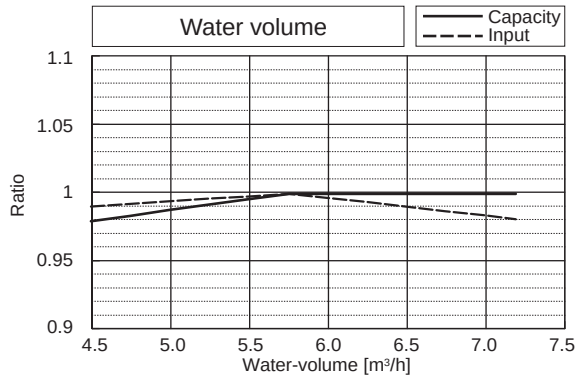

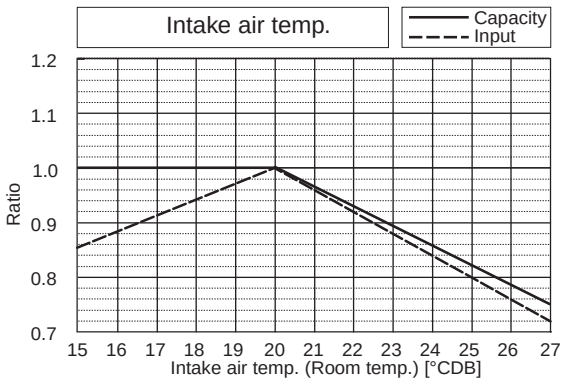

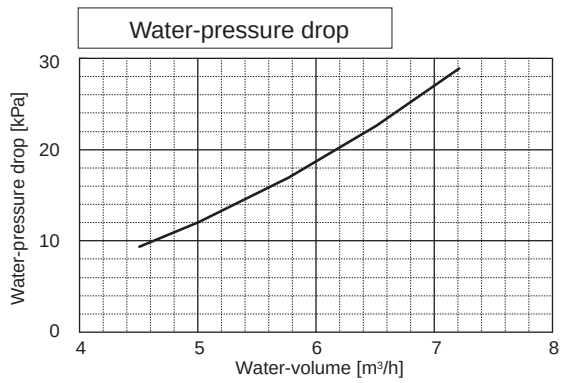

WR2

		PQHY-P250YHM-A	PQRY-P250YHM-A
Nominal Cooling Capacity	kW	28.0	28.0
	BTU/h	95,500	95,500
Input	kW	5.45	5.51

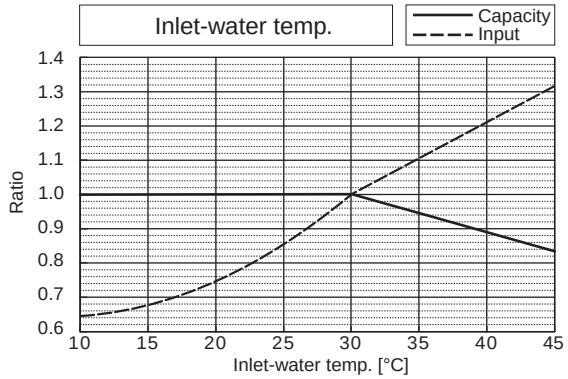

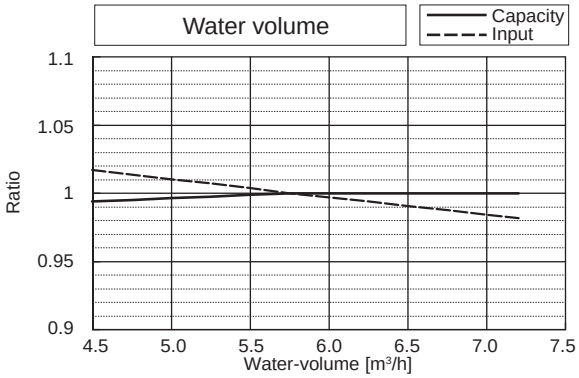

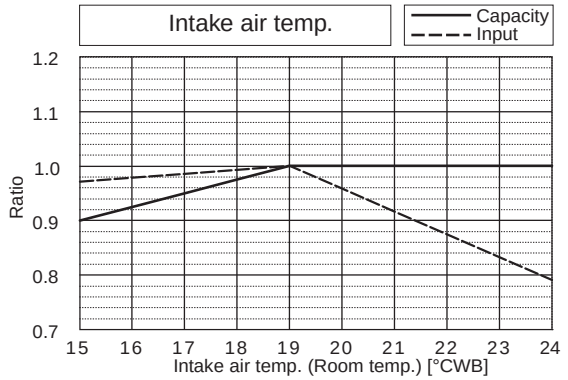

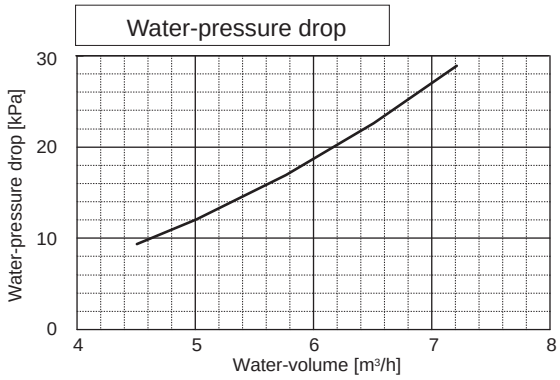

		PQHY-P250YHM-A	PQRY-P250YHM-A
Nominal Heating Capacity	kW	31.5	31.5
	BTU/h	107,500	107,500
Input	kW	5.80	5.80

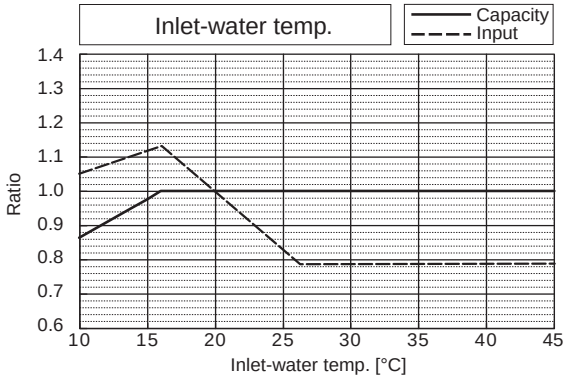

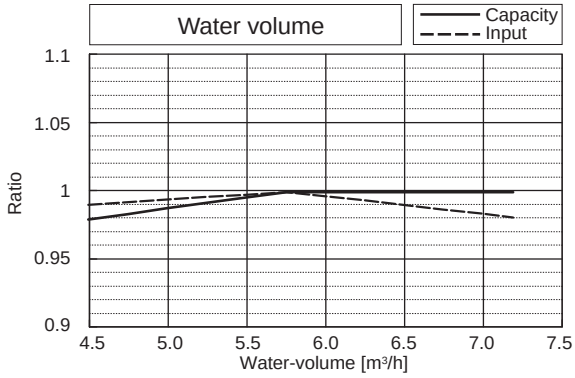

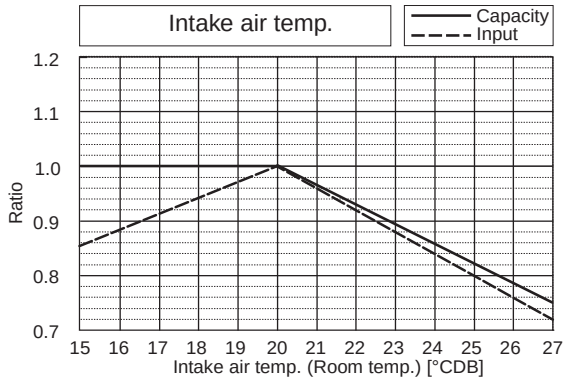

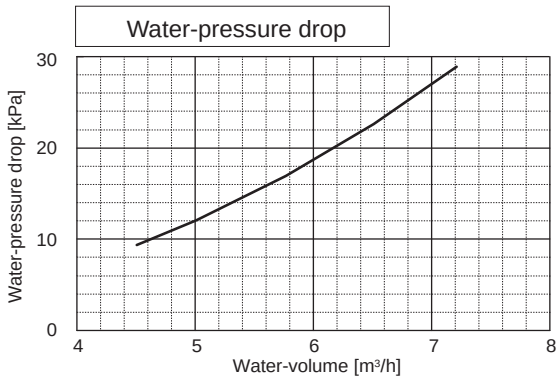

WR2

6. CAPACITY TABLES

		PQHY-P300YHM-A	PQRY-P300YHM-A
Nominal Cooling Capacity	kW	33.5	33.5
	BTU/h	114,300	114,300
Input	kW	7.36	7.44

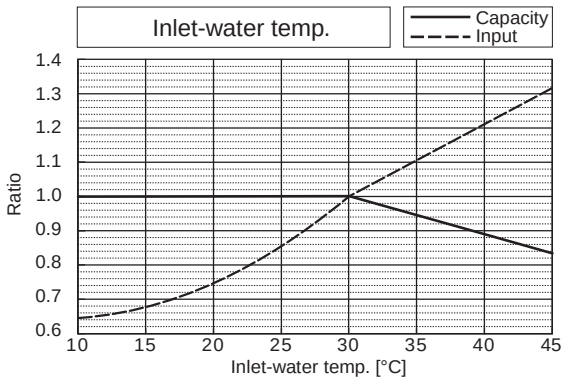

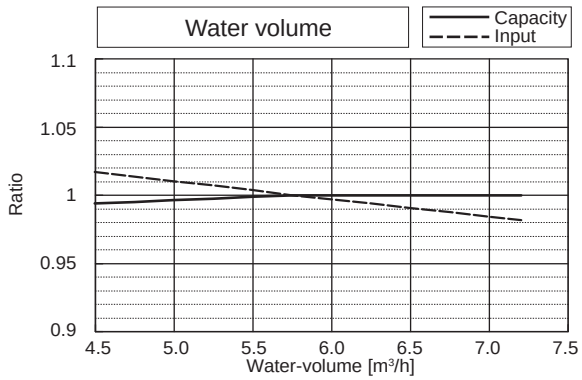

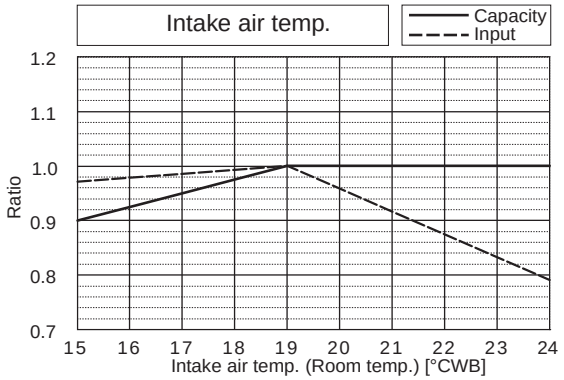

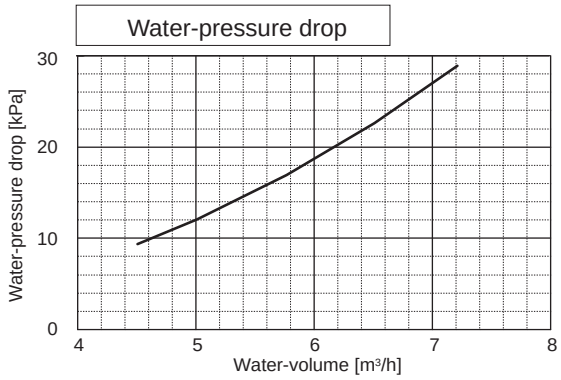

		PQHY-P300YHM-A	PQRY-P300YHM-A
Nominal Heating Capacity	kW	37.5	37.5
	BTU/h	128,000	128,000
Input	kW	8.15	8.15

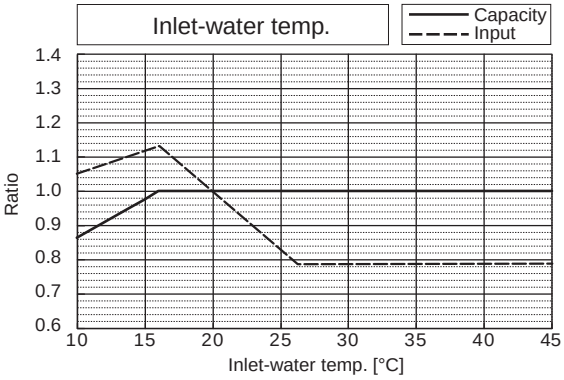

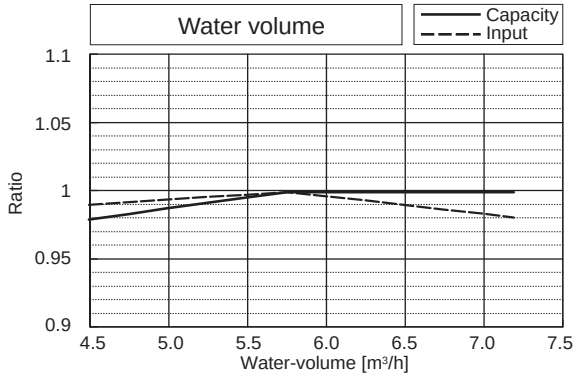

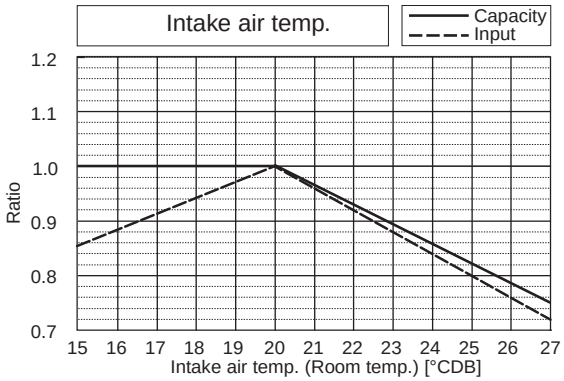

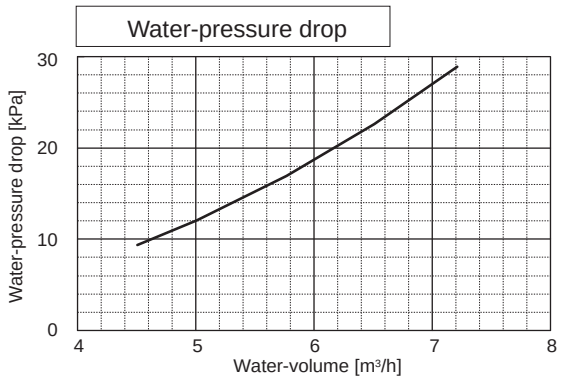

WR2

		PQHY-P400YSHM-A	PQRY-P400YSHM-A
Nominal Cooling Capacity	kW	45.0	45.0
	BTU/h	153,500	153,500
Input	kW	8.25	8.32

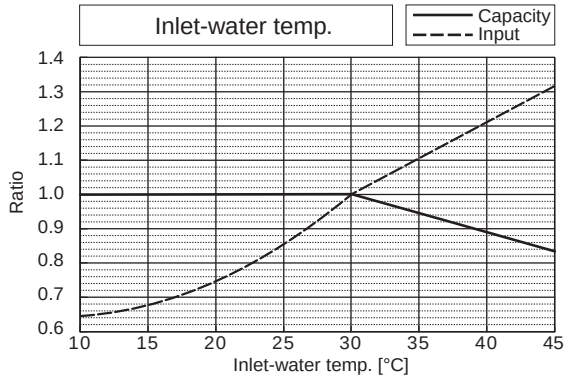

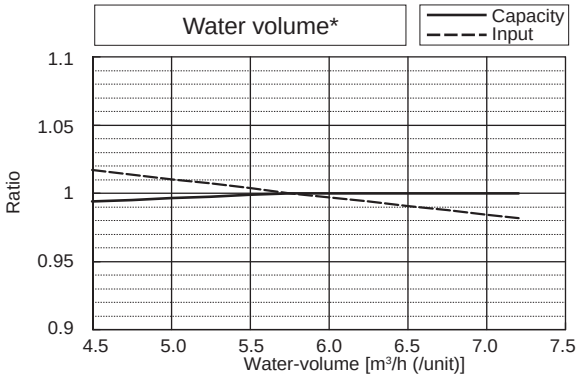

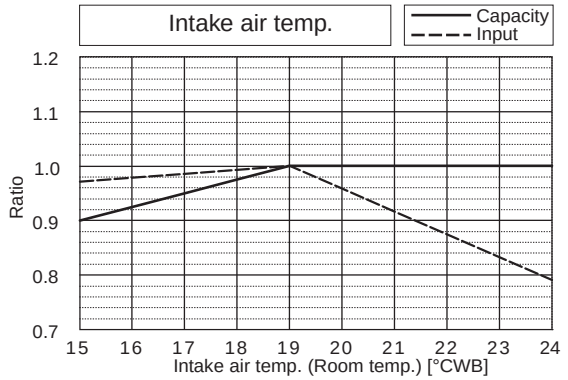

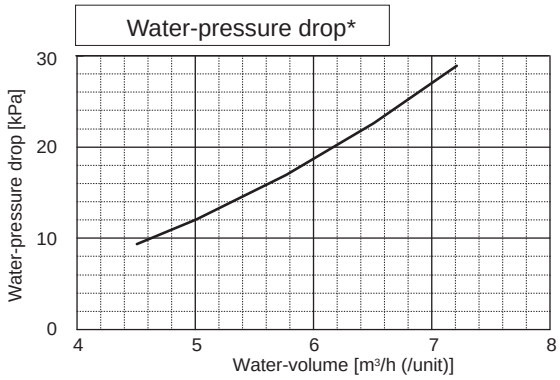

*The drawing indicates characteristic per unit.

		PQHY-P400YSHM-A	PQRY-P400YSHM-A
Nominal Heating Capacity	kW	50.0	50.0
	BTU/h	170,600	170,600
Input	kW	8.65	8.65

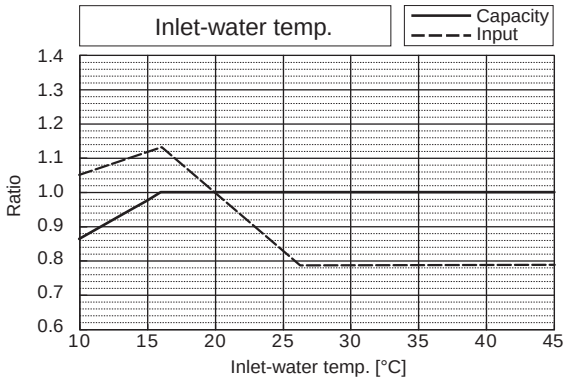

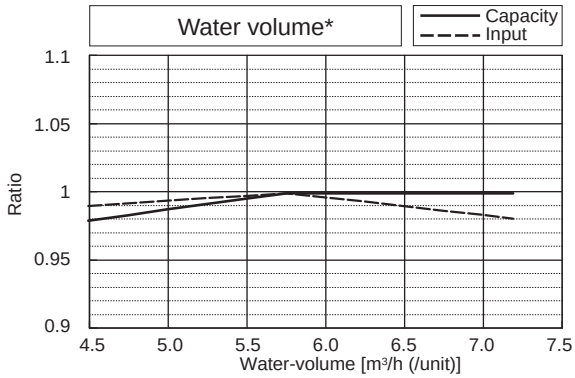

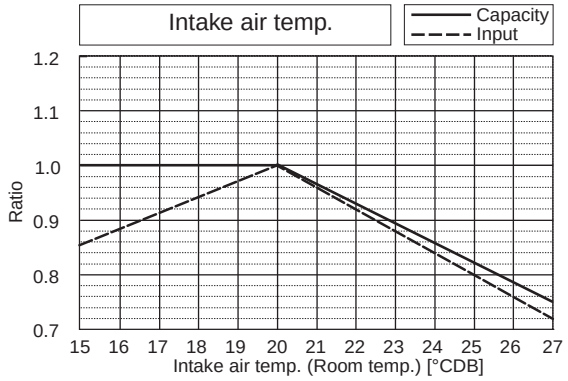

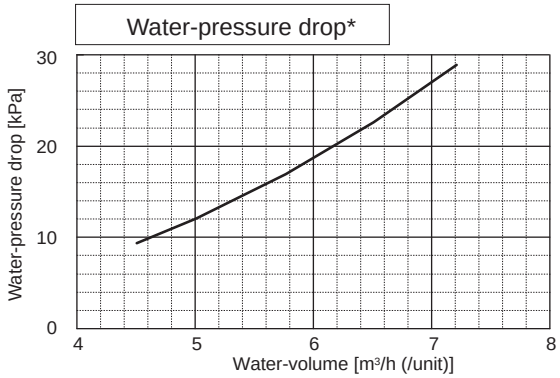

*The drawing indicates characteristic per unit.

WR2

		PQHY-P450YSHM-A	PQRY-P450YSHM-A
Nominal Cooling Capacity	kW	50.0	50.0
	BTU/h	170,600	170,600
Input	kW	9.84	9.94

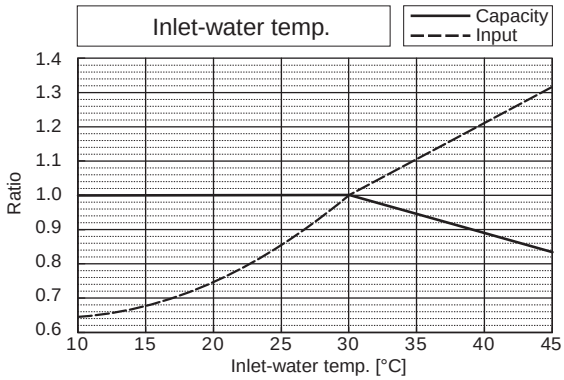

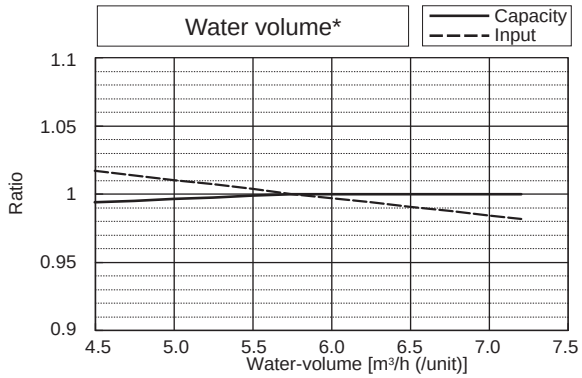

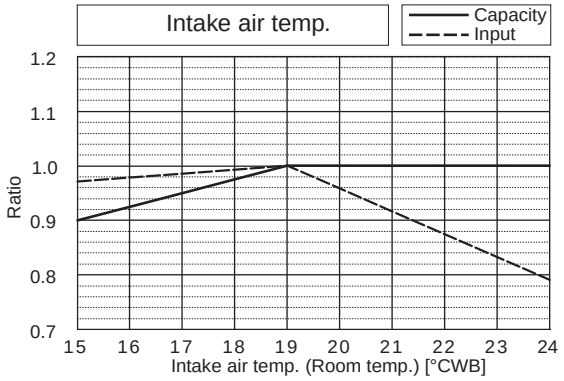

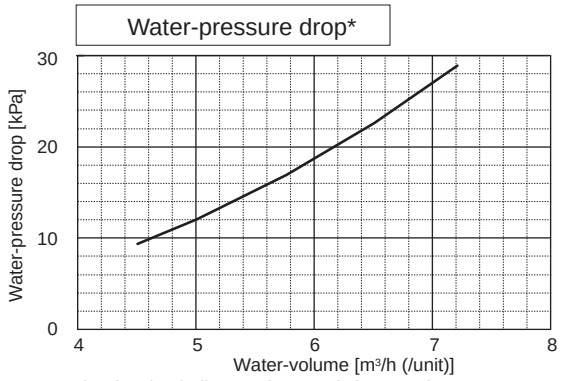

*The drawing indicates characteristic per unit.

		PQHY-P450YSHM-A	PQRY-P450YSHM-A
Nominal Heating Capacity	kW	56.0	56.0
	BTU/h	191,100	191,100
Input	kW	10.42	10.42

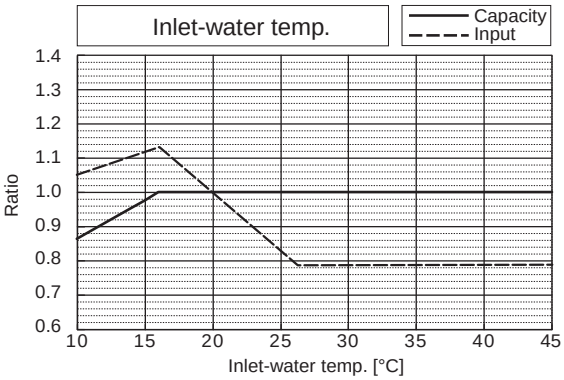

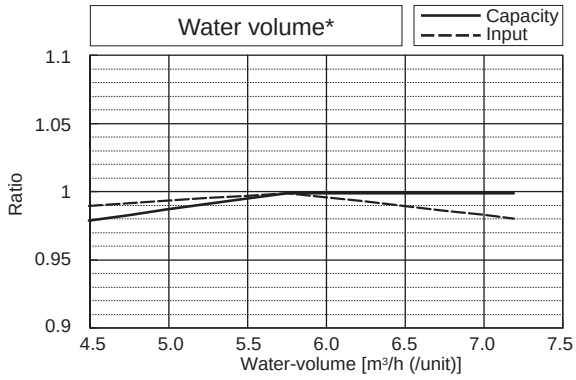

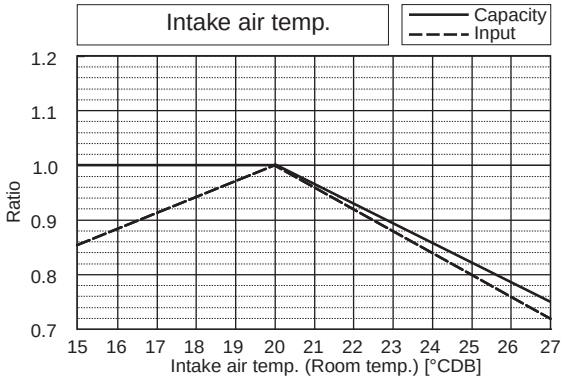

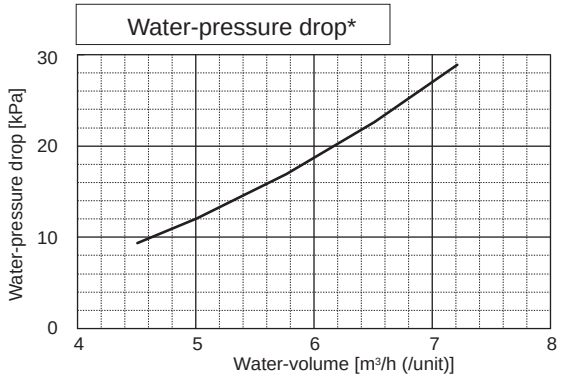

*The drawing indicates characteristic per unit.

WR2

		PQHY-P500YSHM-A	PQRY-P500YSHM-A
Nominal Cooling Capacity	kW	56.0	56.0
	BTU/h	191,100	191,100
Input	kW	11.45	11.57

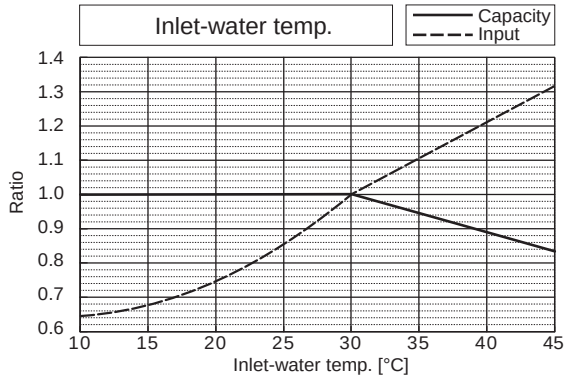

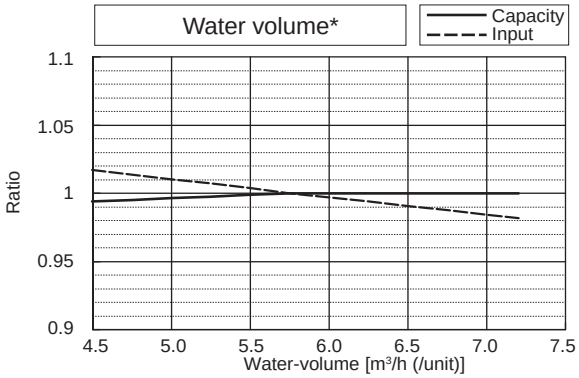

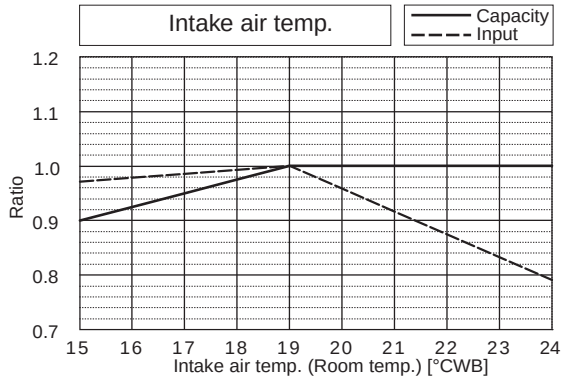

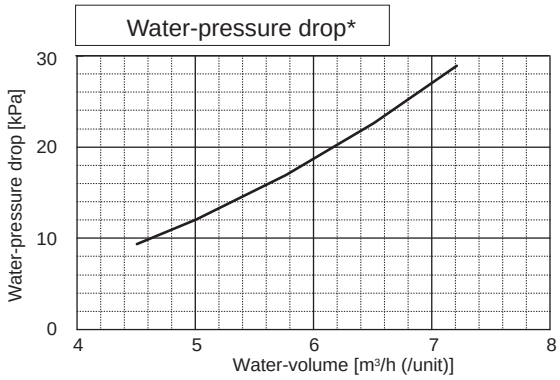

*The drawing indicates characteristic per unit.

		PQHY-P500YSHM-A	PQRY-P500YSHM-A
Nominal Heating Capacity	kW	63.0	63.0
	BTU/h	215,000	215,000
Input	kW	12.06	12.06

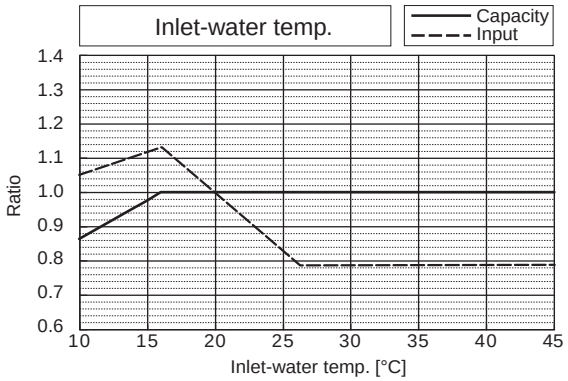

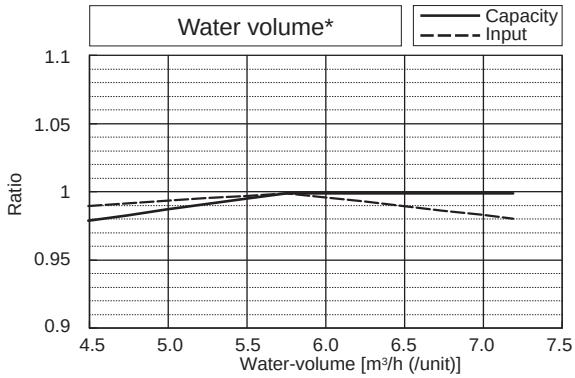

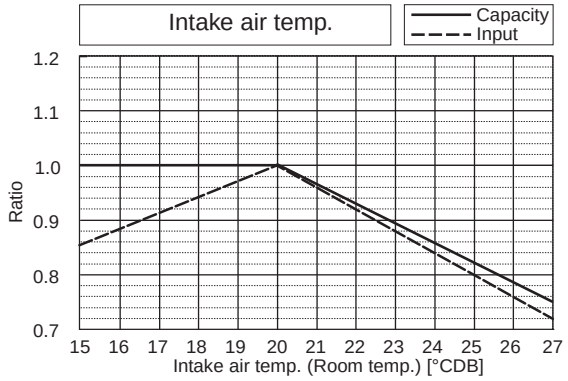

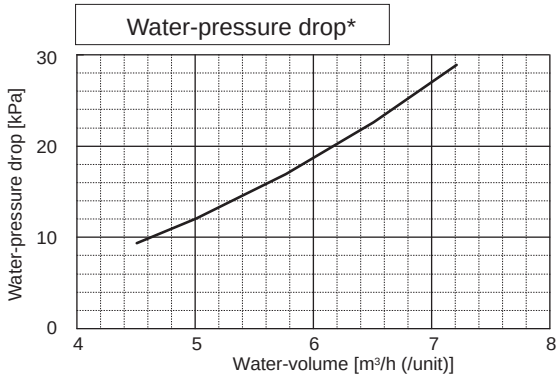

*The drawing indicates characteristic per unit.

WR2

		PQHY-P550YSHM-A	PQRY-P550YSHM-A
Nominal Cooling Capacity	kW	63.0	63.0
	BTU/h	215,000	215,000
Input	kW	13.46	13.60

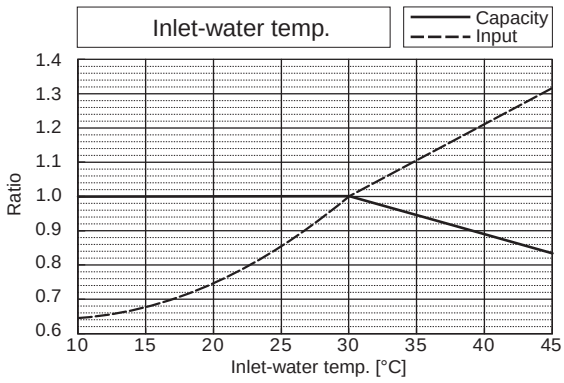

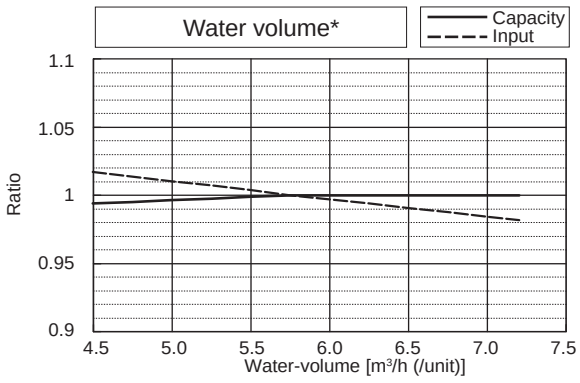

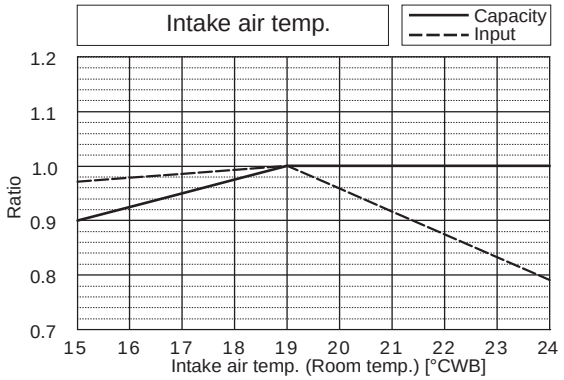

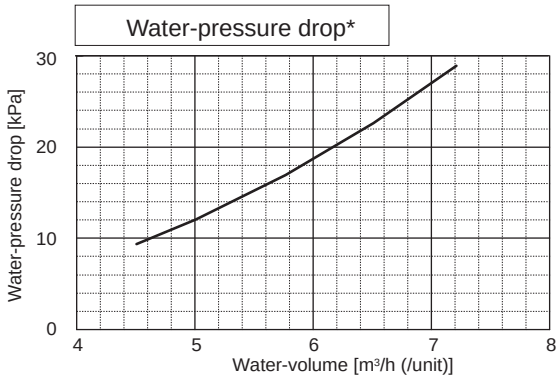

*The drawing indicates characteristic per unit.

		PQHY-P550YSHM-A	PQRY-P550YSHM-A
Nominal Heating Capacity	kW	69.0	69.0
	BTU/h	235,400	235,400
Input	kW	14.65	14.65

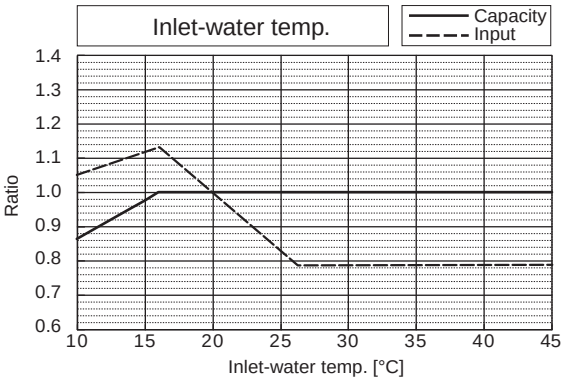

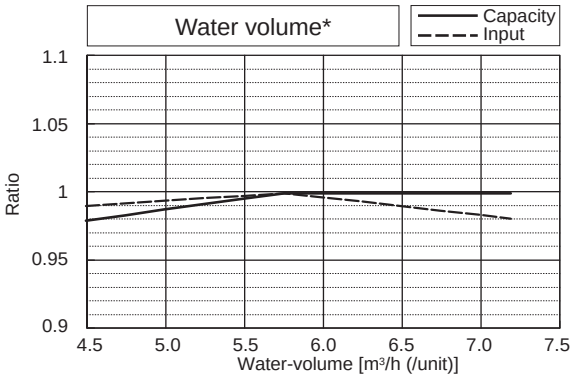

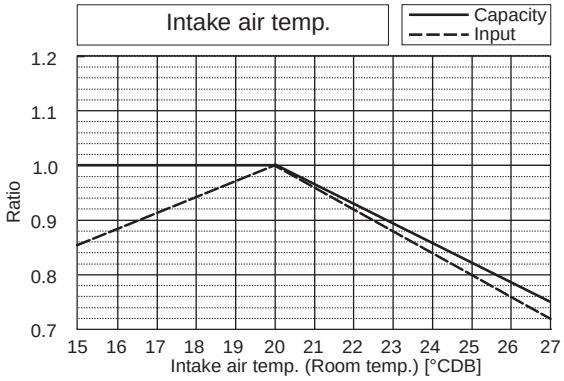

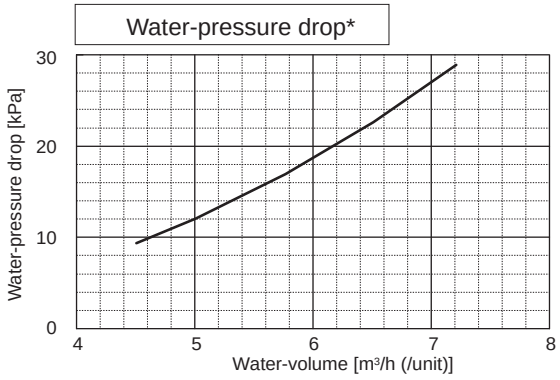

*The drawing indicates characteristic per unit.

WR2

		PQHY-P600YSHM-A	PQRY-P600YSHM-A
Nominal Cooling Capacity	kW	69.0	69.0
	BTU/h	235,400	235,400
Input	kW	15.48	15.62

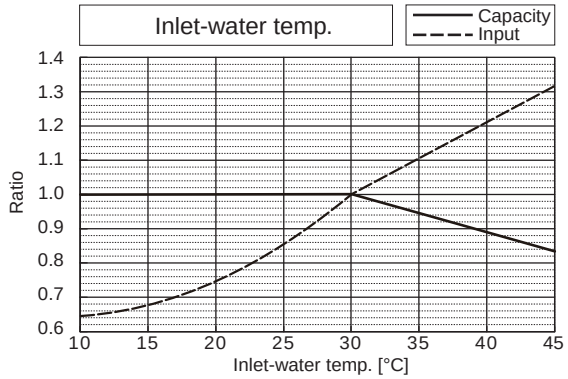

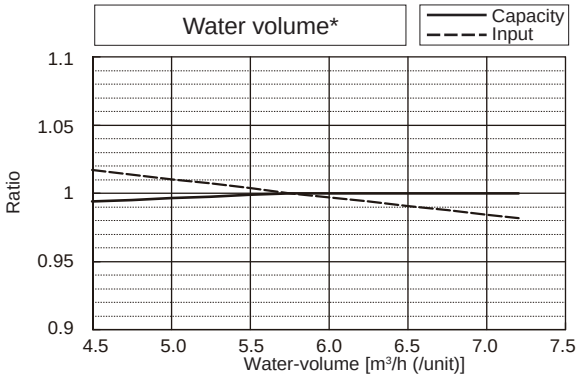

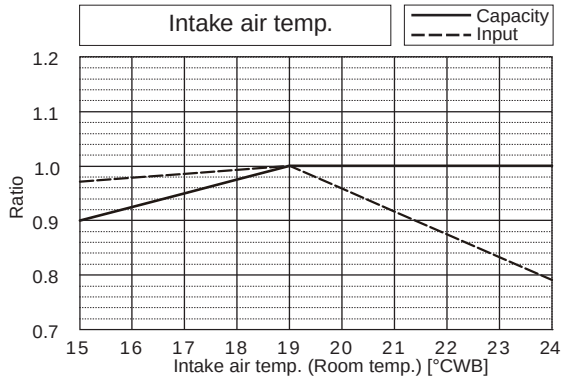

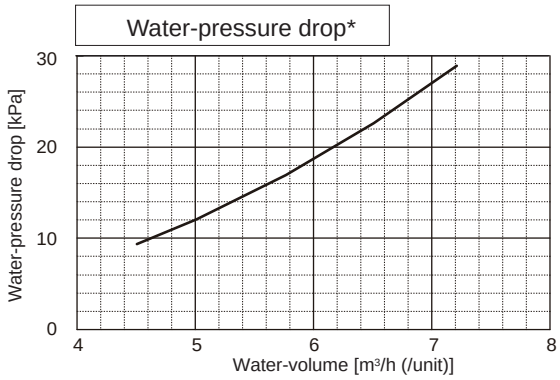

*The drawing indicates characteristic per unit.

		PQHY-P600YSHM-A	PQRY-P600YSHM-A
Nominal Heating Capacity	kW	76.5	76.5
	BTU/h	261,000	261,000
Input	kW	17.12	17.12

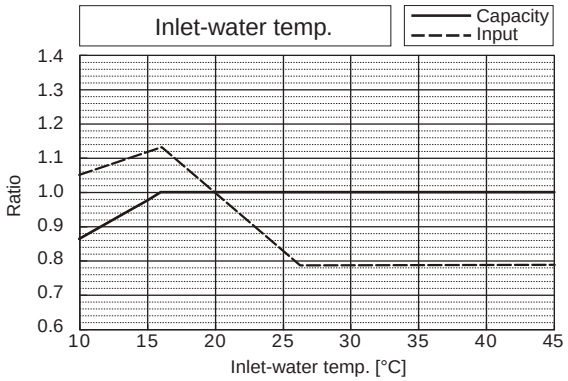

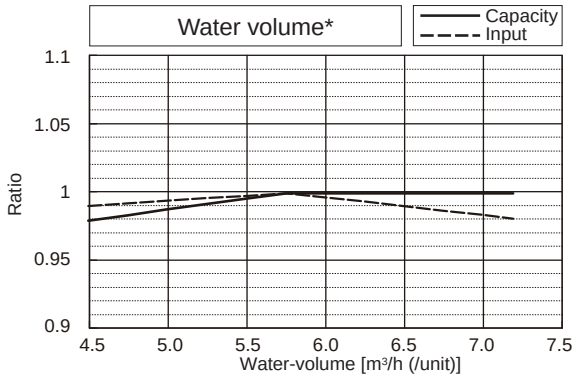

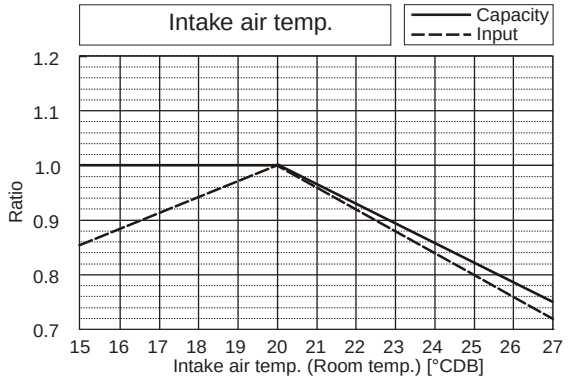

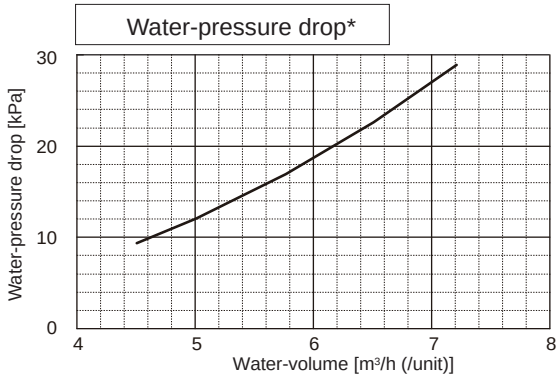

*The drawing indicates characteristic per unit.

WR2

6-2. Correction by total indoor

CITY MULTI system have different capacities and inputs when many combinations of indoor units with different total capacities are connected. Using following tables, the maximum capacity can be found to ensure the system is installed with enough capacity for a particular application.

PQRY-P200YHM-A

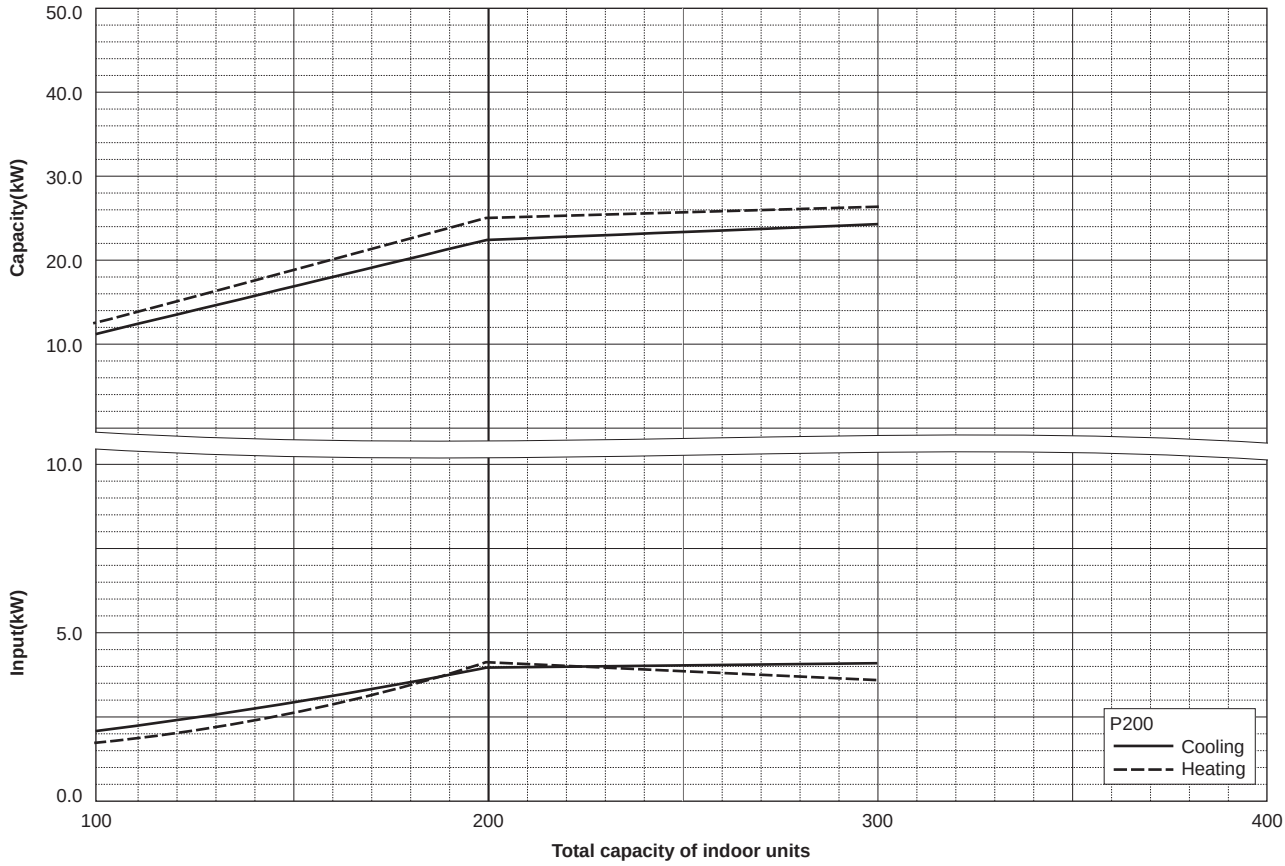

PQRY-P250YHM-A

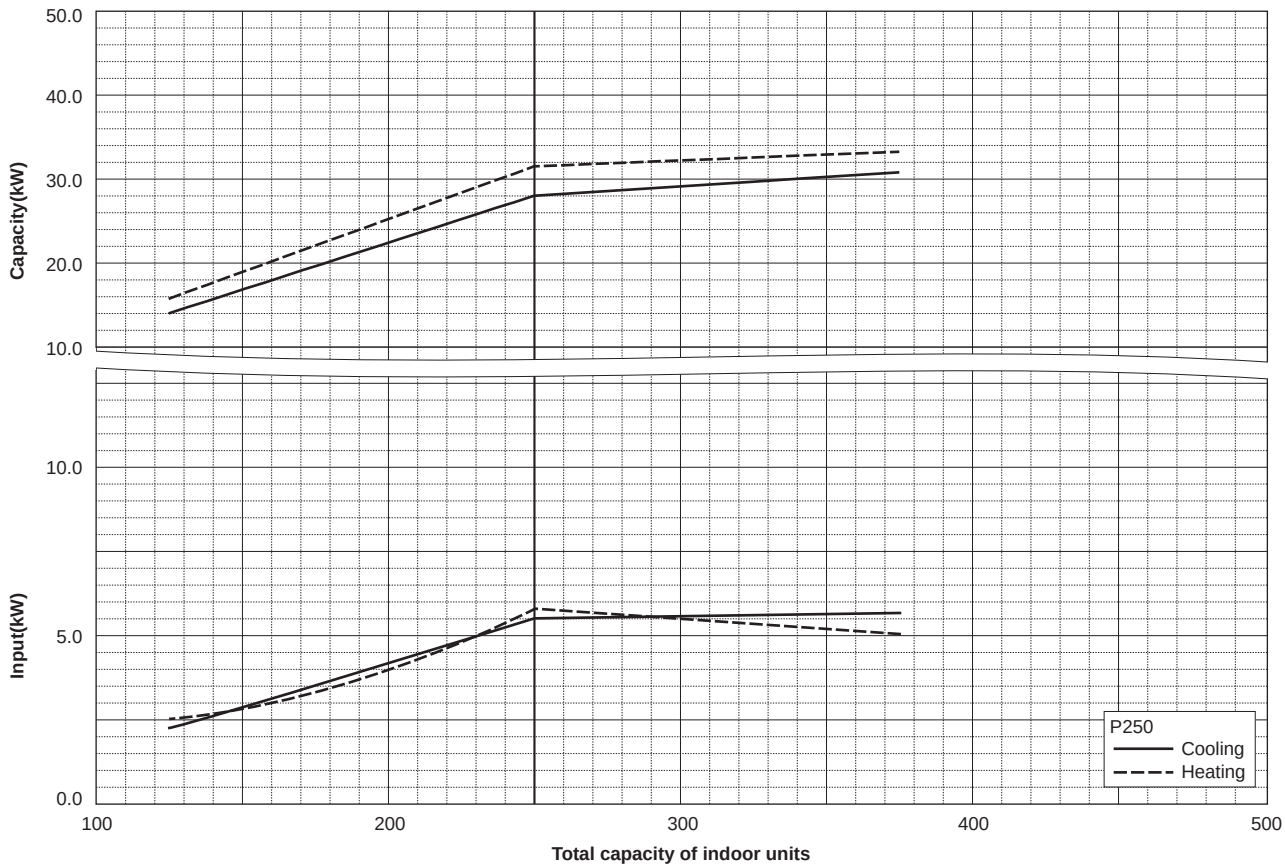

WR2

PQRY-P300YHM-A

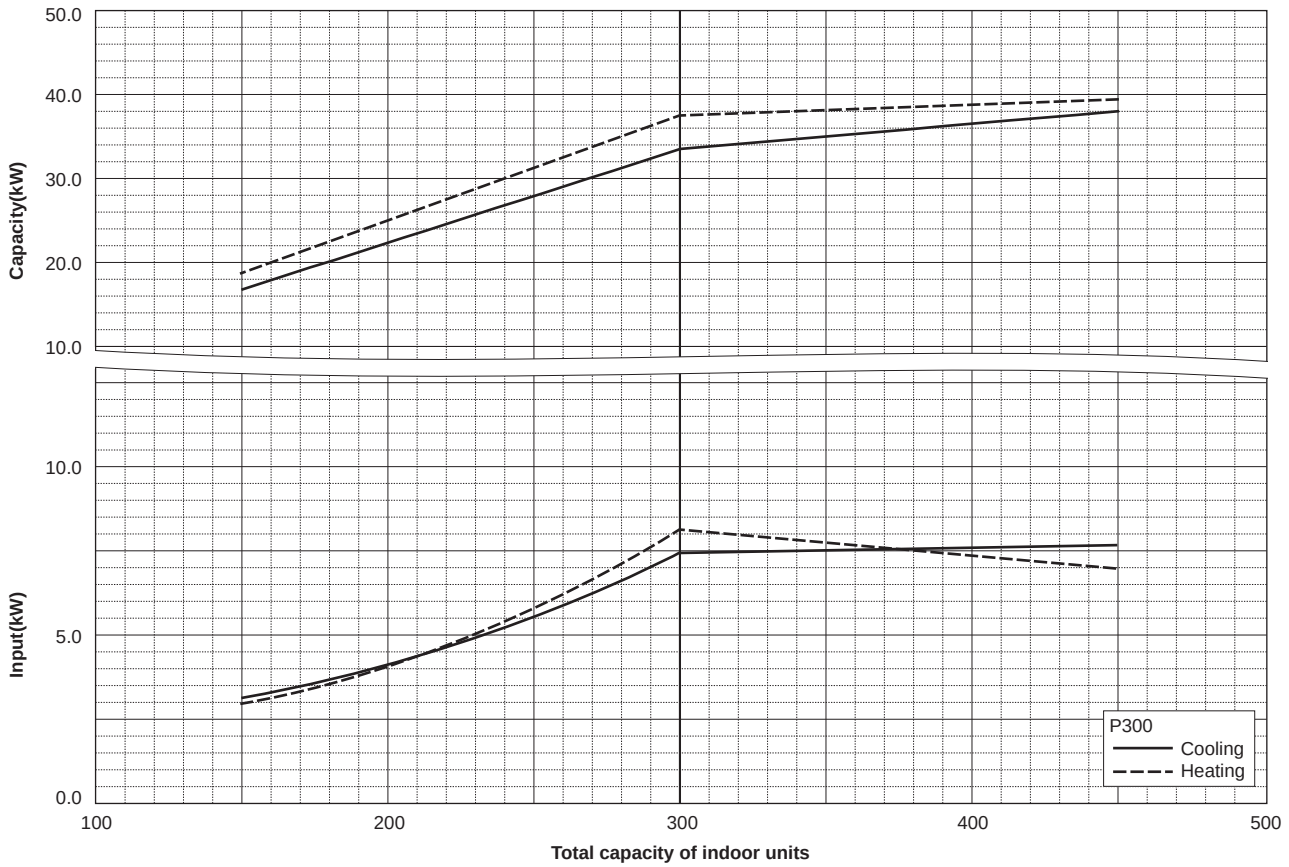

PQRY-P400YSHM-A

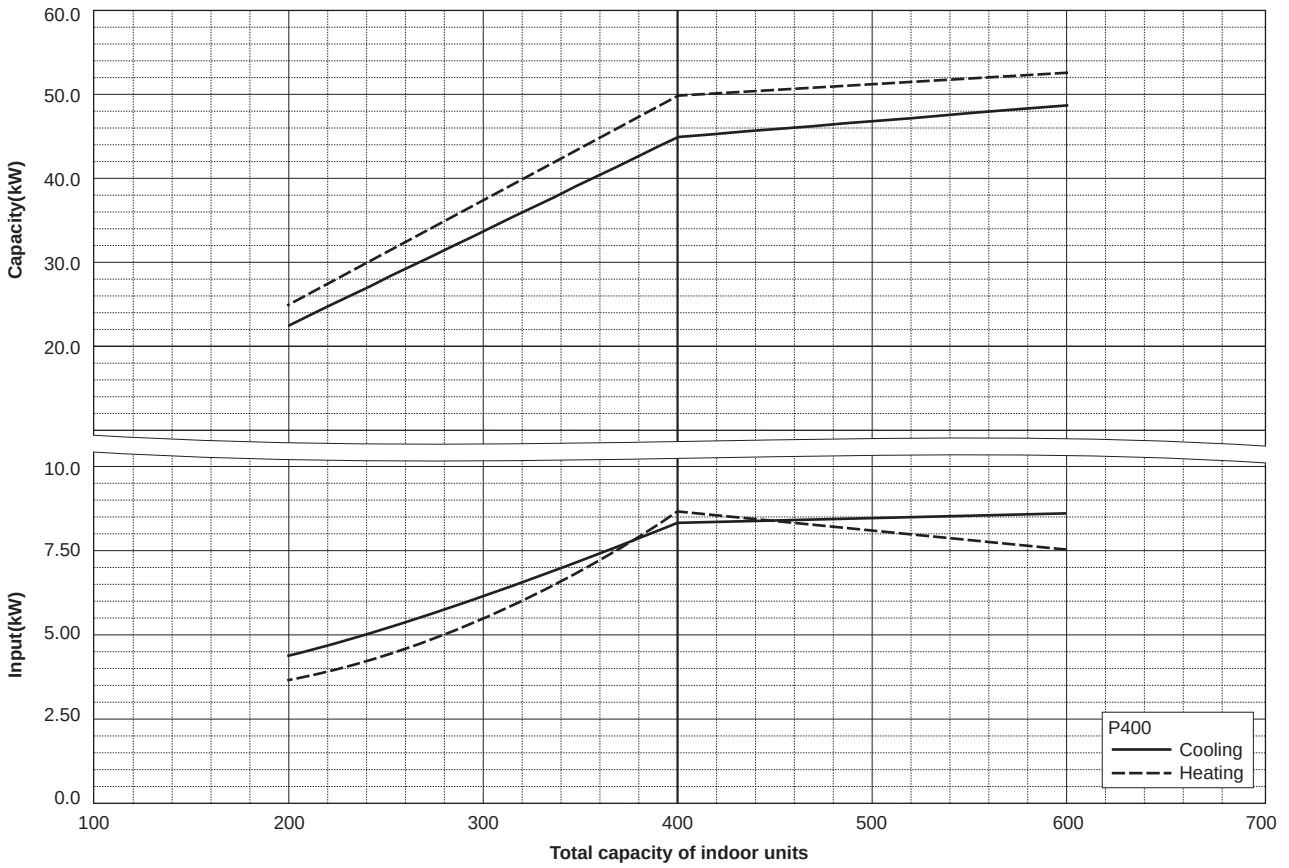

WR2

PQRY-P450YSHM-A

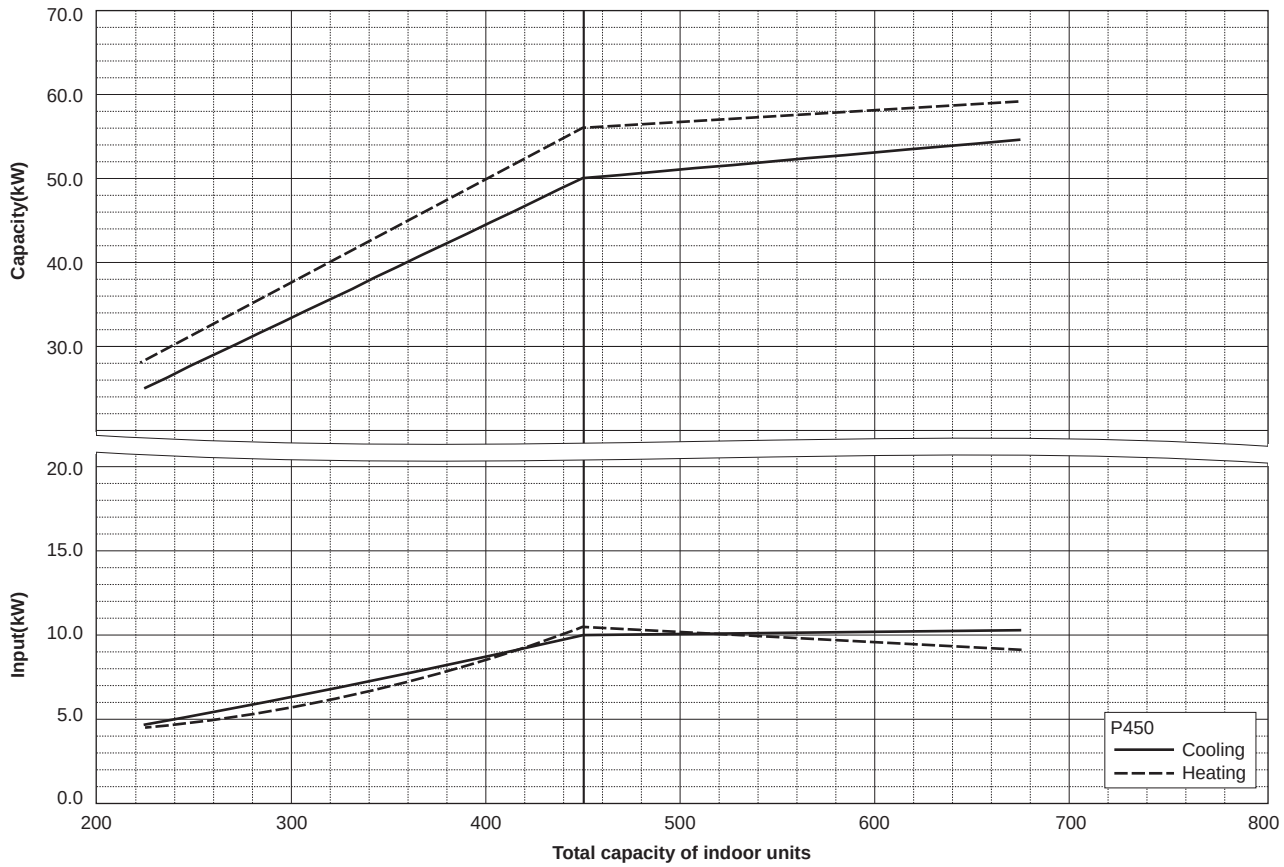

PQRY-P500YSHM-A

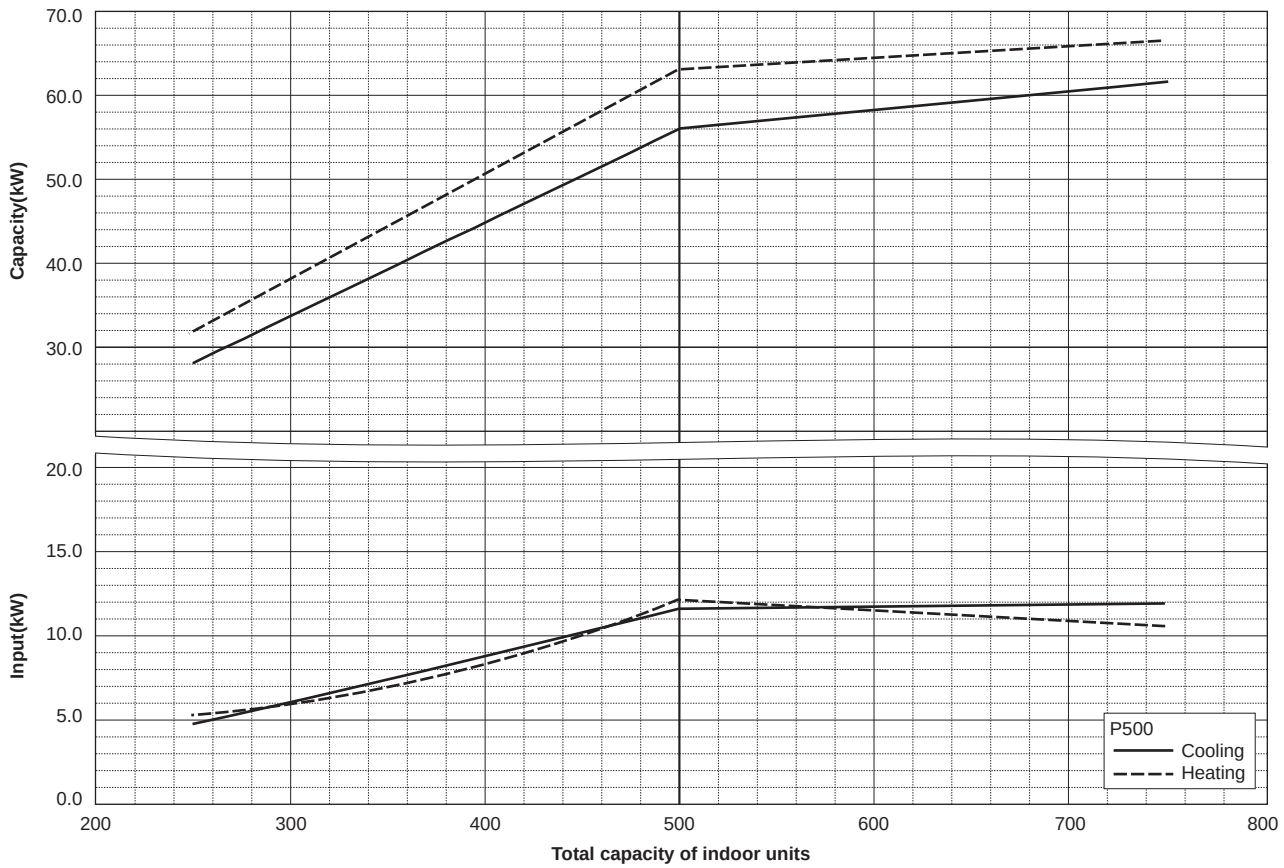

WR2

PQRY-P550YSHM-A

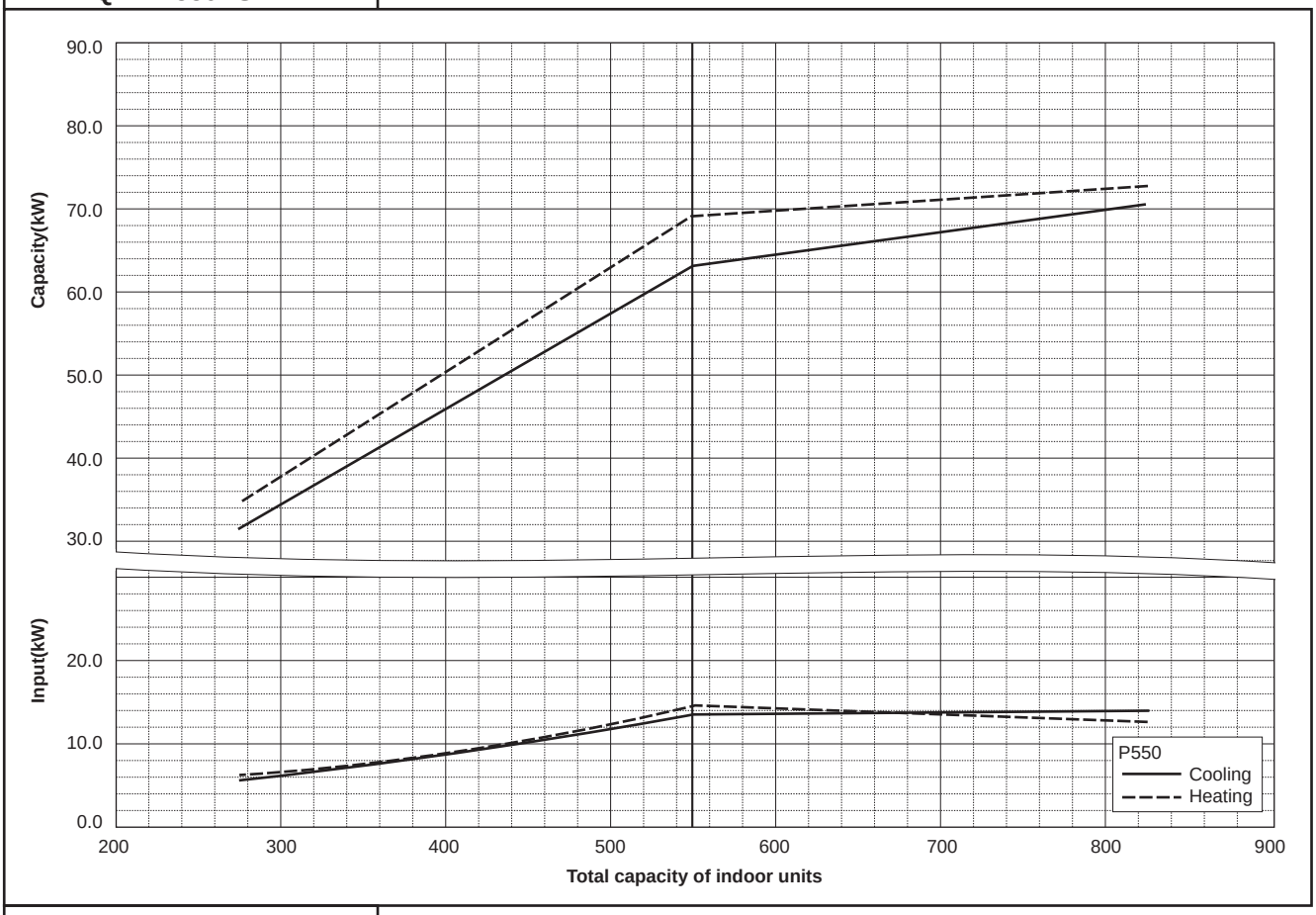

PQRY-P600YSHM-A

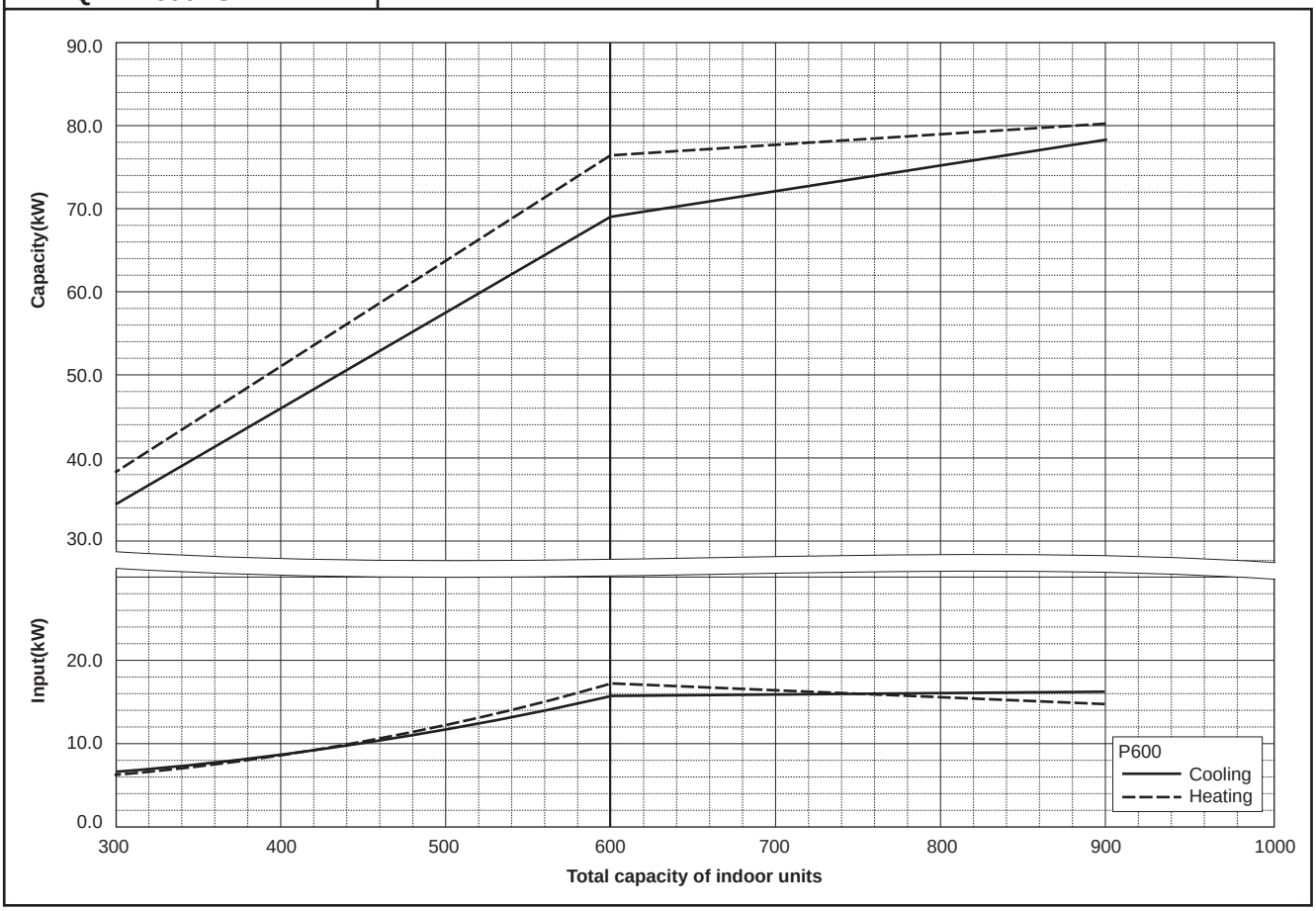

WR2

6-3. Correction by refrigerant piping length

CITY MULTI systems can have extended piping lengths if certain limitations are followed, but cooling/heating capacity could be reduced. Using following correction factor by equivalent piping length shown at 6-3-1 and 6-3-2, capacity can be found. 6-3-3 shows how to obtain the equivalent piping length.

6-3-1. Cooling capacity correction

PQRY-P200YHM-A

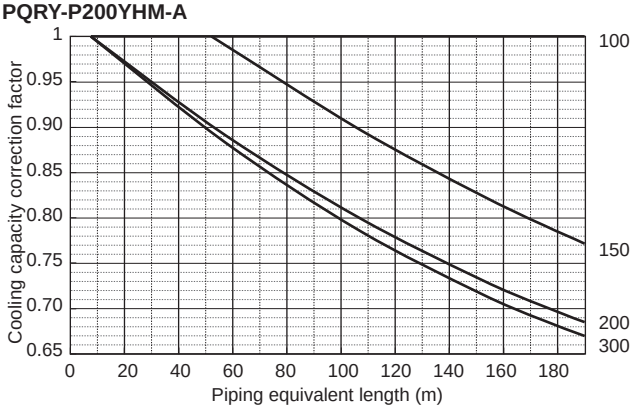

PQRY-P450YSHM-A

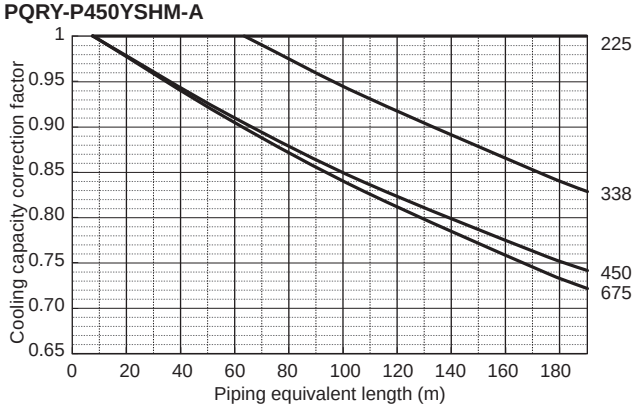

PQRY-P250YHM-A

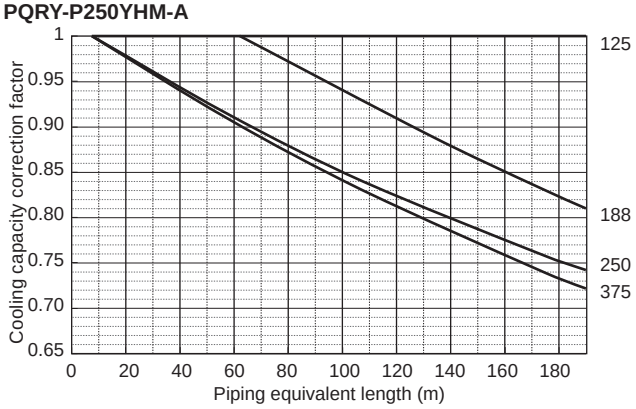

PQRY-P500YSHM-A

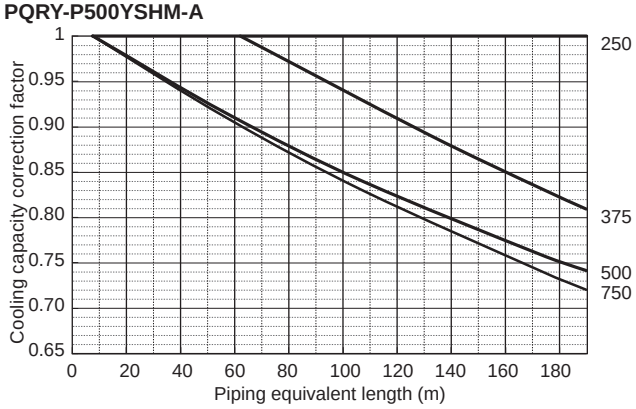

PQRY-P300YHM-A

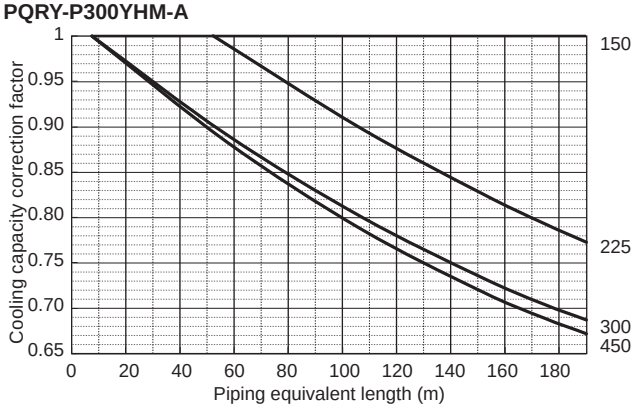

PQRY-P550YSHM-A

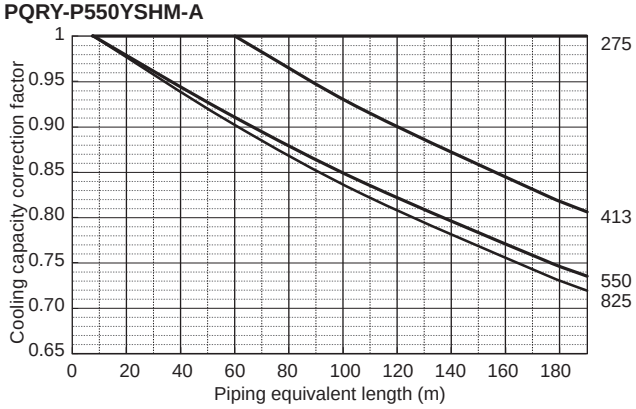

PQRY-P400YSHM-A

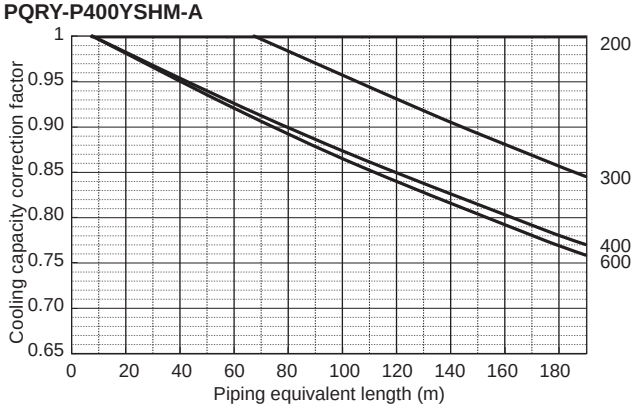

PQRY-P600YSHM-A

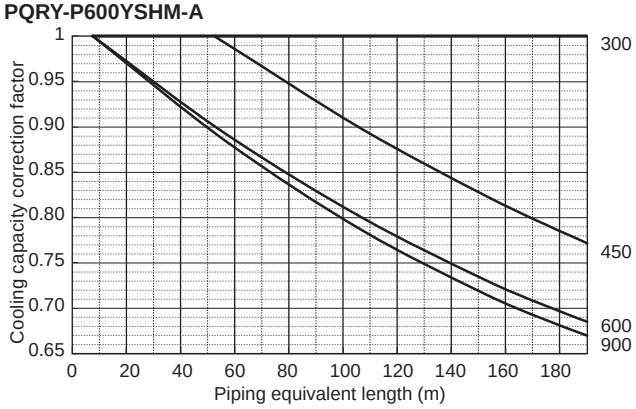

WR2

6-3-2. Heating capacity correction

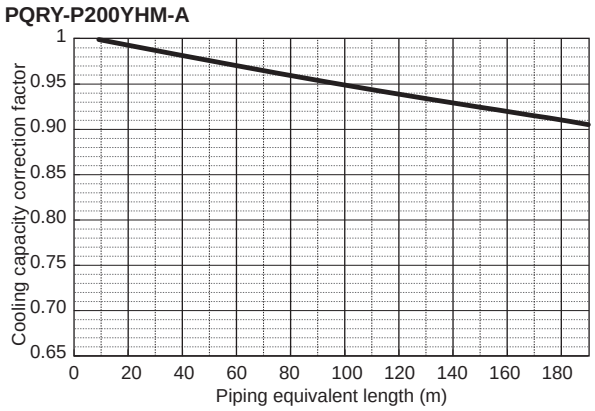

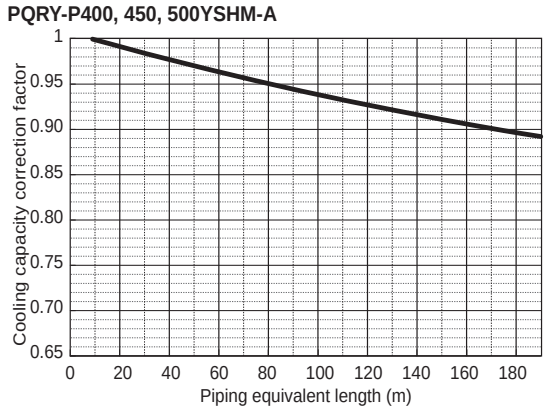

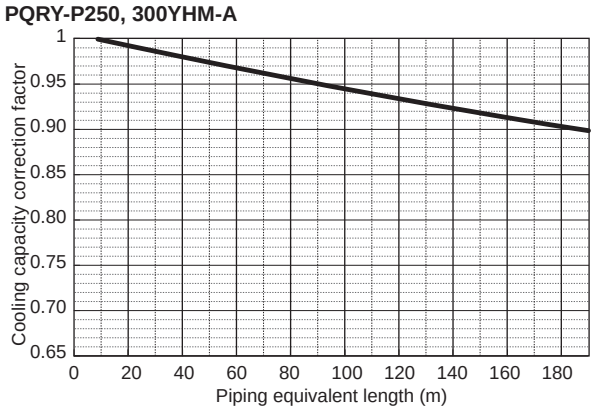

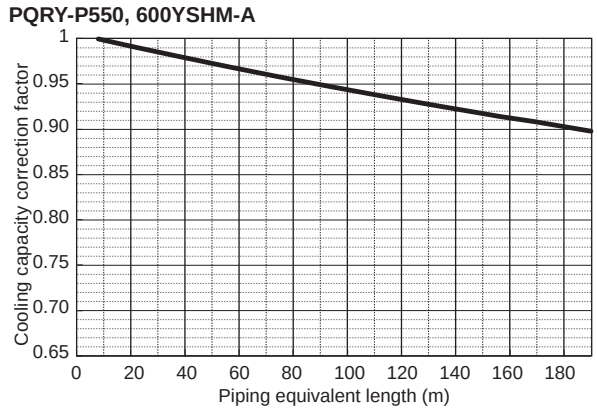

6-3-3. How to obtain the equivalent piping length

WR2

1 **PQRY-P200YHM**
Equivalent length = (Actual piping length to the farthest indoor unit) + (0.35 x number of bends in the piping) m

2 **PQRY-P250, 300YHM**
Equivalent length = (Actual piping length to the farthest indoor unit) + (0.42 x number of bends in the piping) m

3 **PQRY-P400, 450, 500, 550, 600YSHM**
Equivalent length = (Actual piping length to the farthest indoor unit) + (0.50 x number of bends in the piping) m

6-4. Correction by port counts of the BC controller

Indoor unit sizes P200 and P250 must be connected to 2 ports on the BC controller.
Indoor unit sizes from P100 to P140 should normally be connected to 2 ports on the BC controller (set BC controller DIP-SW 4-6 to its ON position).
In cases whereby indoor unit sizes from P100 to P140 are connected to only 1port on the BC controller (set BC controller DIP-SW 4-6 to its OFF position), the cooling capacity of the indoor unit should be multiplied by a correction factor of **0.97.**

6-5. Operation temperature range

• **Cooling**

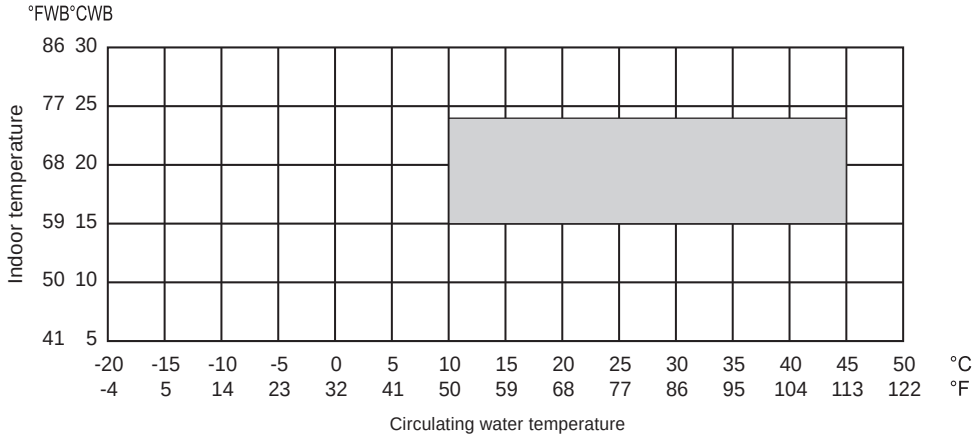

• **Heating**

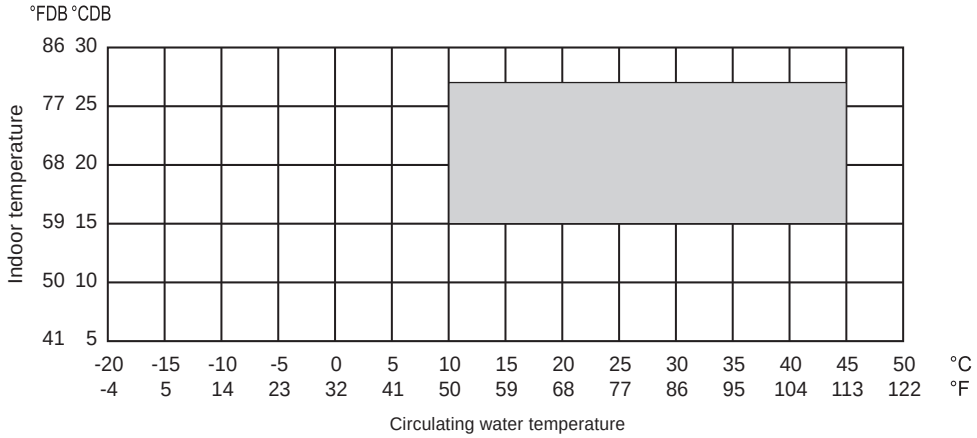

• **Combination of cooling/heating operation (Cooling main or Heating main)**

Water temperature	Indoor temperature	
	Cooling	Heating
10 to 45°C (50 to 113°F)	15 to 24°CWB (59 to 75°FWB)	15 to 27°CDB (59 to 81°FDB)

WR2

7-1. Designing of water circuit system

1) Example of basic water circuit

The water circuit of the water heat source CITY MULTI connects the heat source unit with the cooling tower/auxiliary heat source/heat storage tank/circulation pump with a single system water piping as shown in the figure below. The selector valve automatically controls to circulate water toward the cooling tower in the cooling season, while toward the heat storage tank in the heating season. If the circulation water temperature is kept in a range of 10~45°C[50~113°F]* regardless of the building load, the water heat source CITY MULTI can be operated for either cooling or heating. Therefore in the summer when only cooling load exists, the temperature rise of circulation water will be suppressed by operating the cooling tower. While in the winter when heating load increases, the temperature of circulation water may be dropped below 10°C[50°F]. Under such situation, the circulation water will be heated with the auxiliary heat source if it drops below a certain temperature.

When the thermal balance between cooling and heating operation is in a correct proportion, the operation of the auxiliary heat source and cooling tower is not required.

In order to control the above thermal balance properly and use thermal energy effectively, utilizing of heat storage tanks, and night-time discounted electric power as a auxiliary heat source will be economical.

Meantime as this system uses plural sets of heat source unit equipped with water heat exchangers, water quality control is important. Therefore it is recommended to use closed type cooling towers as much as possible to prevent the circulation water from being contaminated.

When open type cooling towers are used, it is essential to provide proper maintenance control such as that to install water treatment system to prevent troubles caused by contaminated circulation water.

Example of basic water circuit for water heat source CITY MULTI

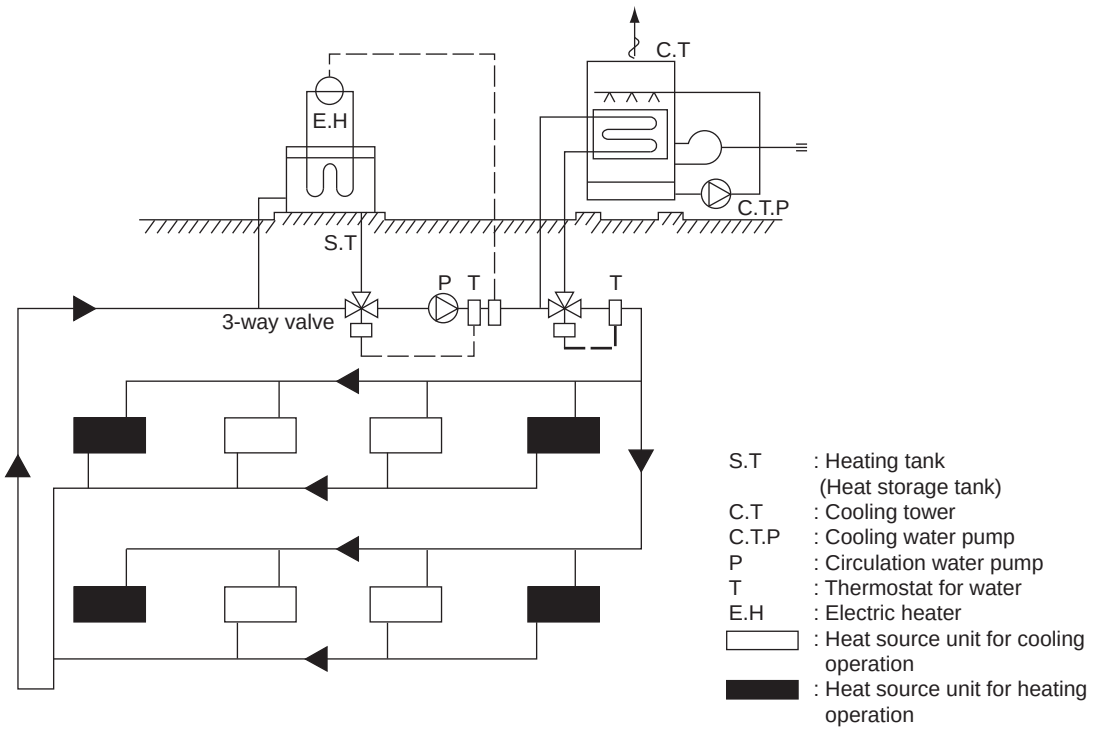

The indoor unit and refrigerant piping system are excluded in this figure.

WR2

2) Cooling tower

a) Types of cooling tower

The cooling towers presently used include the open type cooling tower, open type cooling tower + heat exchanger, closed type cooling tower, and air-cooled type cooling tower. However, as the quality control of circulation water is essential when units are installed in decentralized state inside a building, the closed type cooling tower is generally employed in such case.

Although the circulation water will not be contaminated by atmospheric air, it is recommended to periodically blow water inside the system and replenish fresh water instead.

In a district where the coil may be frozen in the winter, it is necessary to apply antifreeze solution to the circulation water, or take freeze protection measures such as to automatically discharge water inside the cooling coil at the stopping of the pump.

When the open type cooling tower is used, be sure to install a water quality control device in addition to the freeze protection measures, as the water may be deteriorated by atmospheric contaminants entered into the cooling tower and dissolved into the circulation water.

Types of cooling towers

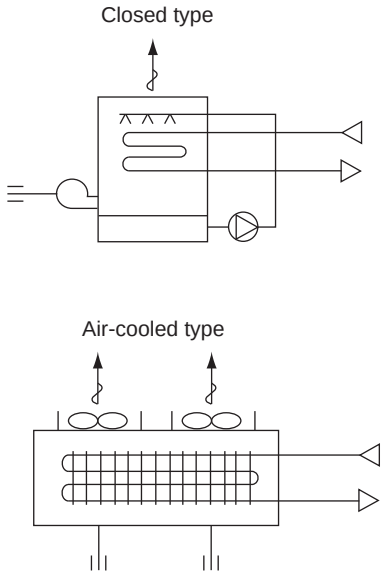

b) Calculation method of cooling tower capacity

All units of the water heat source CITY MULTI may possibly be in cooling operation temporarily (at pulling down) in the summer, however, it is not necessary to determine the capacity according to the total cooling capacity of all CITY MULTI units as this system has a wide operating water temperature range.

It is determined in accordance with the value obtained by adding the maximum cooling load of an actual building, the input heat equivalent value of all CITY MULTI units, and the cooling load of the circulating pumps. Please check for the values of the cooling water volume and circulation water volume.

WR2

$$\text{Cooling tower capacity} = \frac{Qc + 860 \times (\Sigma Qw + Pw)}{3{,}900} \text{ (Refrigeration ton)}$$

Qc : Maximum cooling load under actual state (kcal/h)
Qw : Total input of water heat source CITY MULTI at simultaneous operation under maximum state (kW)
Pw : Shaft power of circulation pumps (kW)

$$\text{Cooling tower capacity} = \frac{Qc + 3{,}412 \times (\Sigma Qw + Pw)}{15{,}500} \text{ (Refrigeration ton)}$$

Qc : Maximum cooling load under actual state (BTU/h)
Qw : Total input of water heat source CITY MULTI at simultaneous operation under maximum state (kW)
Pw : Shaft power of circulation pumps (kW)

* 1 Refrigerant ton of cooling tower capacity ≈ US refrigerant ton x (1+0.3)
= 3,900 kcal/h = 15,500 BTU/h

3) Auxiliary heat source and heat storage tank

When the heating load is larger than the cooling load, the circulation water temperature lowers in accordance with the heat balance of the system. It should be heated by the auxiliary heat source in order to keep the inlet water temperature within the operating range of the water heat source CITY MULTI.

Further in order to operate the water heat source CITY MULTI effectively, it is recommended to utilize the heat storage tank to cover the warming up load in the morning and the insufficient heat amount.

Effective heat utilization can be expected to cover insufficient heat at the warming up in the next morning or peak load time by storing heat by installing a heat storage tank or operating a low load auxiliary heat source at the stopping of the water heat source CITY MULTI. As it can also be possible to reduce the running cost through the heat storage by using the discounted night-time electric power, using both auxiliary heat source and heat storage tank together is recommended.

The effective temperature difference of an ordinary heat storage tank shows about 5deg. even with the storing temperature at 45°C[113°F].

However with the water heat source CITY MULTI, it can be utilized as heating heat source up to 15°C[59°F] with an effective temperature of a high 30deg°C[54deg°F]. approximately, thus the capacity of the heat storage tank can be minimized.

a) Auxiliary heat source

The following can be used as the auxiliary heat source.

- Boiler (Heavy oil, kerosine, gas, electricity)
- Electric heat (Insertion of electric heater into heat storage tank)
- Outdoor air (Air-heat source heat pump chiller)
- Warm discharge water (Exhaust water heat from machines inside building and hot water supply)
- Utilization of night-time lighting
- Solar heat

Please note that the auxiliary heat source should be selected after studying your operating environment and economical feasibility.

Determining the auxiliary heat source capacity

For the CITY MULTI water heat source system, a heat storage tank is recommended to use. When employment of the heat storage tank is difficult, the warming up operation should be arranged to cover the starting up heating load. Since the holding water inside the piping circuit owns heat capacity and the warming up operation can be assumed for about one hour except that in a cold region, the heat storage tank capacity is required to be that at the maximum daily heating load including the warming up load at the next morning of the holiday. However the auxiliary heat source capacity should be determined by the daily heating load including warming up load on the week day.

For the load at the next morning of the holiday, heat storage is required by operating the auxiliary heat source even outside of the ordinary working hour.

WR2

When heat storage tank is not used

$$QH = HC_T \left(1 - \frac{1}{COP_h}\right) - 1000 \times V_W \times \Delta T - 860 \times P_W$$

QH	: Auxiliary heat source capacity	(kcal/h)
HC_T	: Total heating capacity of each water heat source CITY MULTI	(kcal/h)
COP_H	: COP of water heat source CITY MULTI at heating	
V_W	: Holding water volume inside piping	(m^3)
ΔT	: Allowable water temperature drop = $T_{WH} - T_{WL}$	(°C)
T_{WH}	: Heat source water temperature at high temperature side	(°C)
T_{WL}	: Heat source water temperature at low temperature side	(°C)
P_W	: Heat source water pump shaft power	(kW)

$$QH = HC_T \left(1 - \frac{1}{COP_h}\right) - 8.343 \times V_W \times \Delta T - 3412 \times P_W$$

QH	: Auxiliary heat source capacity	(BTU/h)
HC_T	: Total heating capacity of each water heat source CITY MULTI	(BTU/h)
COP_H	: COP of water heat source CITY MULTI at heating	
V_W	: Holding water volume inside piping	(G)
ΔT	: Allowable water temperature drop = $T_{WH} - T_{WL}$	(°F)
T_{WH}	: Heat source water temperature at high temperature side	(°F)
T_{WL}	: Heat source water temperature at low temperature side	(°F)
P_W	: Heat source water pump shaft power	(kW)

When heat storage tank is not used

$$QH = \frac{HQ_{1T} \cdot \left(1 - \frac{1}{COP_h}\right) - 860 \times Pw \times T_2}{T1} \times K \quad \text{(kcal)}$$

QH_{1T}	: Total of heating load on weekday including warming up	(kcal/day)
T_1	: Operating hour of auxiliary heat source	(h)
T_2	: Operating hour of heat source water pump	(h)
K	: Allowance factor (Heat storage tank, piping loss, etc.)	1.05~1.10

HQ_{1T} is calculated from the result of steady state load calculation similarly by using the equation below.

$$HQ_{1T} = 1.15 \times (\Sigma Q'a + \Sigma Q'b + \Sigma Q'c + \Sigma Q'd + \Sigma Q'f)\, T_2 - \psi\, (\Sigma Qe_1 + \Sigma Qe_2 + \Sigma Qe_3)\, (T2 - 1)$$

Q'a	: Thermal load from external wall/roof in each zone	(kcal/h)
Q'b	: Thermal load from glass window in each zone	(kcal/h)
Q'c	: Thermal load from partition/ceiling/floor in each zone	(kcal/h)
Q'd	: Thermal load by infiltration in each zone	(kcal/h)
Q'f	: Fresh outdoor air load in each zone	(kcal/h)
$Q'e_1$	: Thermal load from human body in each zone	(kcal/h)
$Q'e_2$	: Thermal load from lighting fixture in each zone	(kcal/h)
$Q'e_3$	: Thermal load from equipment in each zone	(kcal/h)
ψ	: Radiation load rate	0.6~0.8
T2	: Air conditioning hour	

$$QH = \frac{HQ_{1T} \cdot \left(1 - \frac{1}{COP_h}\right) - 3{,}412 \times Pw \times T_2}{T1} \times K \quad \text{(BTU)}$$

QH_{1T}	: Total of heating load on weekday including warming up	(BTU/day)
T_1	: Operating hour of auxiliary heat source	(h)
T_2	: Operating hour of heat source water pump	(h)
K	: Allowance factor (Heat storage tank, piping loss, etc.)	1.05~1.10

HQ_{1T} is calculated from the result of steady state load calculation similarly by using the equation below.

$$HQ_{1T} = 1.15 \times (\Sigma Q'a + \Sigma Q'b + \Sigma Q'c + \Sigma Q'd + \Sigma Q'f)\, T_2 - \psi\, (\Sigma Qe_1 + \Sigma Qe_2 + \Sigma Qe_3)\, (T2 - 1)$$

Q'a	: Thermal load from external wall/roof in each zone	(BTU/h)
Q'b	: Thermal load from glass window in each zone	(BTU/h)
Q'c	: Thermal load from partition/ceiling/floor in each zone	(BTU/h)
Q'd	: Thermal load by infiltration in each zone	(BTU/h)
Q'f	: Fresh outdoor air load in each zone	(BTU/h)
$Q'e_1$	: Thermal load from human body in each zone	(BTU/h)
$Q'e_2$	: Thermal load from lighting fixture in each zone	(BTU/h)
$Q'e_3$	: Thermal load from equipment in each zone	(BTU/h)
ψ	: Radiation load rate	0.6~0.8
T2	: Air conditioning hour	

b) Heat storage tank

Heat storage tank can be classified by types into the open type heat storage tank exposed to atmosphere, and the closed type heat storage tank with structure separated from atmosphere. Although the size of the tank and its installation place should be taken into account, the closed type tank is being usually employed by considering corrosion problems.
The capacity of heat storage tanks is determined in accordance with the daily maximum heating load that includes warming up load to be applied for the day after the holiday.

When auxiliary heat source is operated during operation and even after stopping of water heat source CITY MULTI unit

$$V = \frac{HQ_{2T}\left(1 - \frac{1}{COP_h}\right) - 860 \times Pw \times T_2 - QH \times T_2}{\Delta T \times 1{,}000 \times \eta V} \quad \text{(ton)}$$

HQ_{2T} : Maximum heating load including load required for the day after the holiday (kcal/day)
ΔT : Temperature difference utilized by heat storage tank (deg°C)
ηV : Heat storage tank efficiency

HQ_{2T} : $1.3 \times (\Sigma Q'a + \Sigma Q'c + \Sigma Q'd + \Sigma Q'f)\ T2 - \psi(\Sigma Qe2 + \Sigma Qe3)\ (T2 - 1)$

$$V = \frac{HQ_{2T}\left(1 - \frac{1}{COP_h}\right) - 3{,}412 \times Pw \times T_2 - QH \times T_2}{\Delta T \times \eta V} \quad \text{(lbs)}$$

HQ_{2T} : Maximum heating load including load required for the day after the holiday (BTU/day)
ΔT : Temperature difference utilized by heat storage tank (deg°F)
ηV : Heat storage tank efficiency

HQ_{2T} : $1.3 \times (\Sigma Q'a + \Sigma Q'c + \Sigma Q'd + \Sigma Q'f)\ T2 - \psi(\Sigma Qe2 + \Sigma Qe3)\ (T2 - 1)$

WR2

When auxiliary heat source is operated after stopping of water heat source CITY MULTI unit

$$V = \frac{HQ_{2T}\left(1 - \frac{1}{COP_h}\right) - 860 \times Pw \times T_2}{\Delta T \times 1{,}000 \times \eta V} \quad \text{(ton)}$$

HQ_{2T} : Maximum heating load including load required for the day after the holiday (kcal/day)
ΔT : Temperature difference utilized by heat storage tank (deg°C)
ηV : Heat storage tank efficiency

HQ_{2T} : $1.3 \times (\Sigma Q'a + \Sigma Q'c + \Sigma Q'd + \Sigma Q'f)\ T2 - \psi(\Sigma Qe2 + \Sigma Qe3)\ (T2 - 1)$

$$V = \frac{HQ_{2T}\left(1 - \frac{1}{COP_h}\right) - 3{,}412 \times Pw \times T_2}{\Delta T \times \eta V} \quad \text{(lbs)}$$

HQ_{2T} : Maximum heating load including load required for the day after the holiday (BTU/day)
ΔT : Temperature difference utilized by heat storage tank (deg°F)
ηV : Heat storage tank efficiency

HQ_{2T} : $1.3 \times (\Sigma Q'a + \Sigma Q'c + \Sigma Q'd + \Sigma Q'f)\ T2 - \psi(\Sigma Qe2 + \Sigma Qe3)\ (T2 - 1)$

4) Piping system

The following items should be kept in your mind in planning / designing water circuits.

a) All units should be constituted in a single circuit in principle.

b) When plural numbers of the water heat source CITY MULTI unit are installed, the rated circulating water flow rate should be kept by making the piping resistance to each unit almost same value. As an example, the reverse return system as shown below may be employed.

c) Depending on the structure of a building, the water circuit may be prefabricated by making the layout uniform.

d) When a closed type piping circuit is constructed, install an expansion tank usable commonly for a make-up water tank to absorb the expansion/contraction of water caused by temperature fluctuation.

e) If the operating temperature range of circulation water stays within the temperature near the normal temperature (summer : 29.4°C[85°F], winter : 21.1°C[70°F]), thermal insulation or anti-sweating work is not required for the piping inside buildings.

In case of the conditions below, however, thermal insulation is required.

- When well water is used for heat source water.
- When piped to outdoor or a place where freezing may be caused.
- When vapor condensation may be generated on piping due to an increase in dry bulb temperature caused by the entry of fresh outdoor air.

System example of water circuit

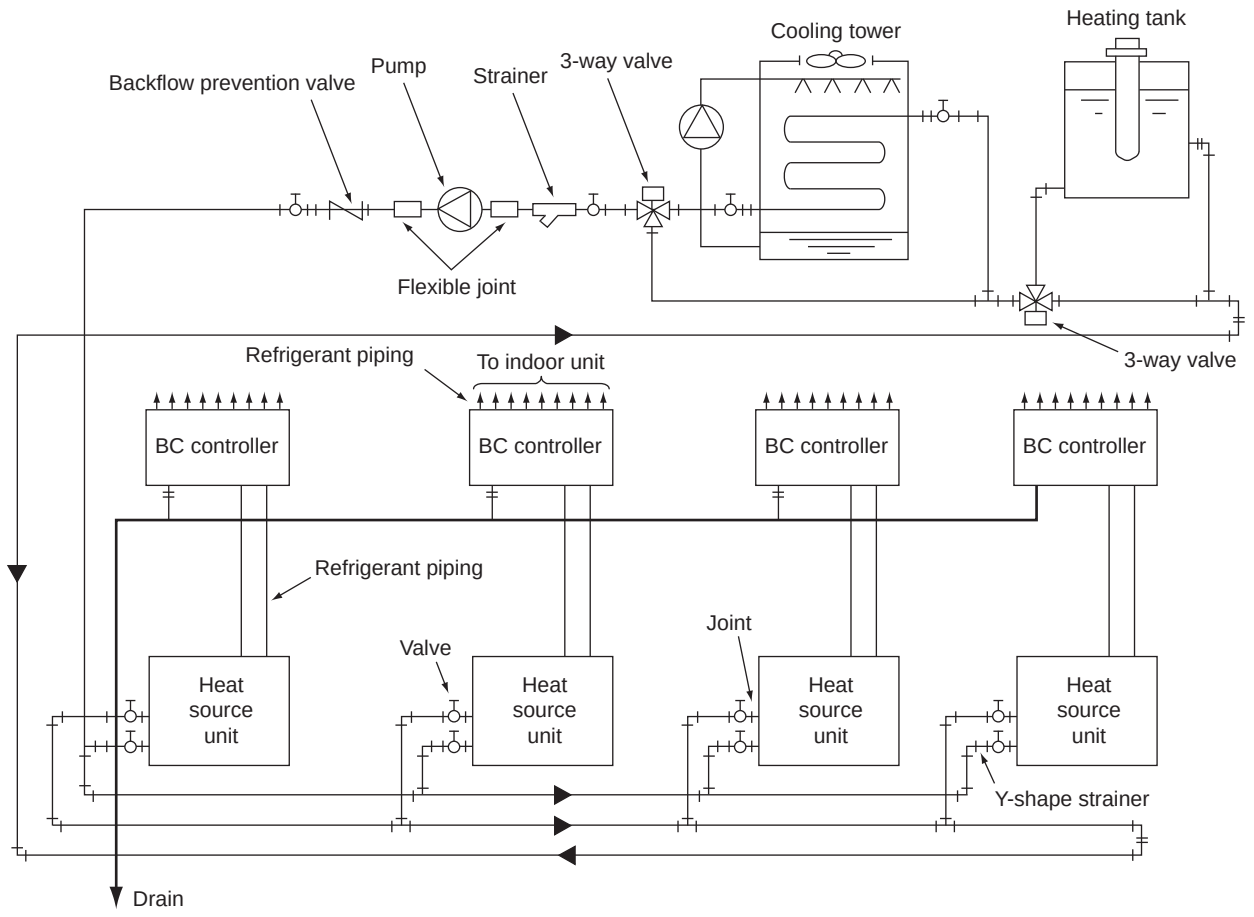

WR2

5) Practical System Examples and Circulation Water Control

Since the water heat source CITY MULTI is of water heat source system, versatile systems can be constituted by combining it with various heat sources.
The practical system examples are given below.
Either cooling or heating operation can be performed if the circulation water temperature of the water heat source CITY MULTI stays within a range of 15~45°C [59~113°F]. However, the circulation water temperature near 32°C[90°F] for cooling and 20°C[68°F] for heating is recommended by taking the life, power consumption and capacity of the air conditioning units into consideration. The detail of the control is also shown below.

Example-1 Combination of closed type cooling tower and hot water heat storage tank (using underground hollow slab)

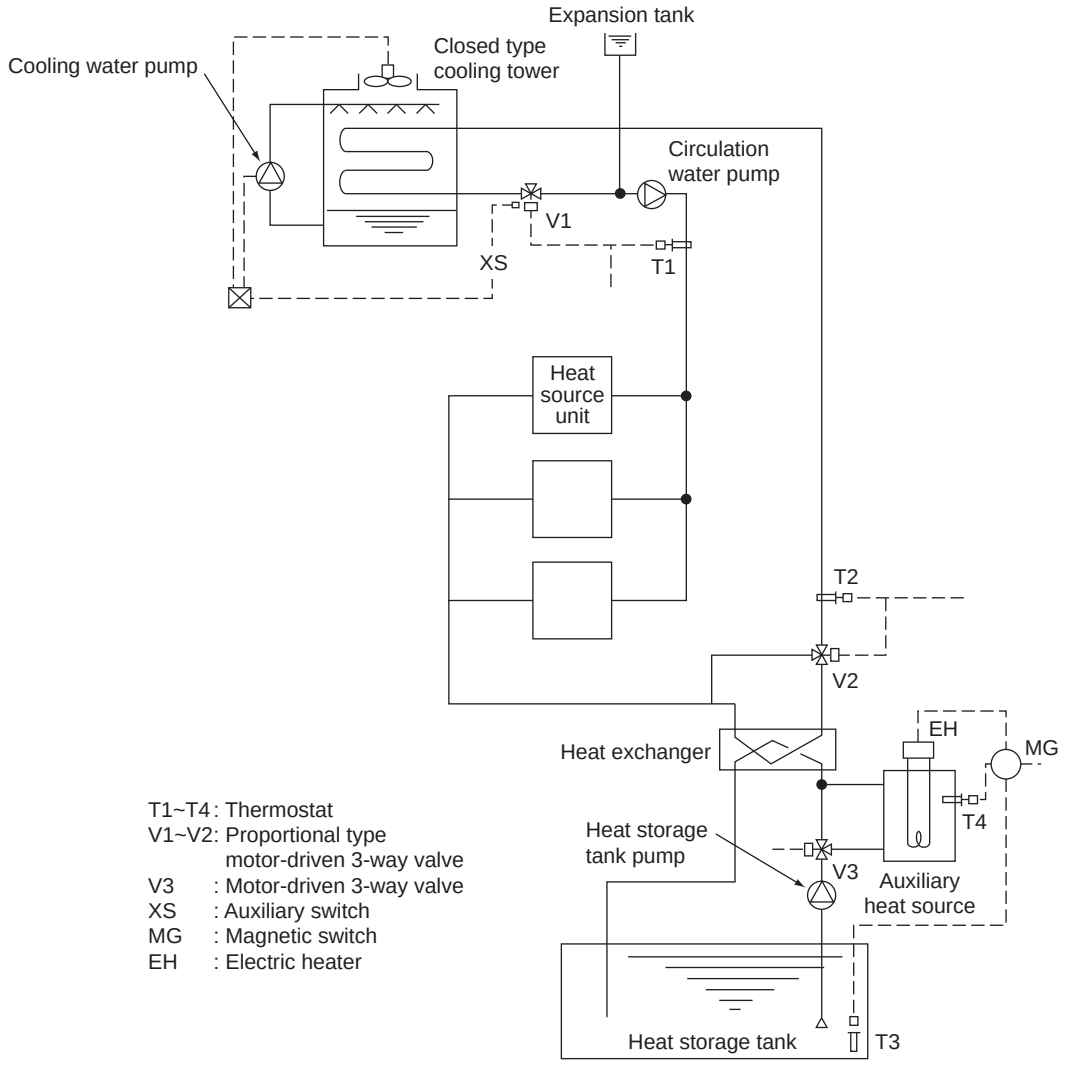

By detecting the circulation water temperature of the water heat source CITY MULTI system with T1 (around 32°C[90°F]) and T2 (around 20°C[68°F]), the temperature will be controlled by opening/closing V1 in the summer and V2 in the winter.
In the summer, as the circulation water temperature rises exceeding the set temperature of T1, the bypass port of V1 will open to lower the circulation water temperature. While in the winter, as the circulation water temperature drops, V2 will open following the command of T2 to rise the circulation water temperature.
The water inside the heat storage tank will be heated by the auxiliary heat source by V3 being opened with timer operation in the night-time. The electric heater of the auxiliary heat source will be controlled by T3 and the timer. The start/stop control of the fan and pump of the closed type cooling tower is applied with the step control of the fan and pump following the command of the auxiliary switch XS of V1, that operates only the fan at the light load while the fan and pump at the maximum load thus controlling water temperature and saving motor power.

Example-2 Combination of closed type cooling tower and hot water heat storage tank

T1 : Proportional type, insertion system thermostat
T2 : Proportional type, insertion system thermostat
T3 : Proportional type, insertion system thermostat
V1 : Proportional type, motor-driven 3-way valve
V2 : Proportional type, motor-driven 3-way valve
XS : Auxiliary switch (Duplex switch type)
SC : Step controller
R : Relay
MG : Magnetic

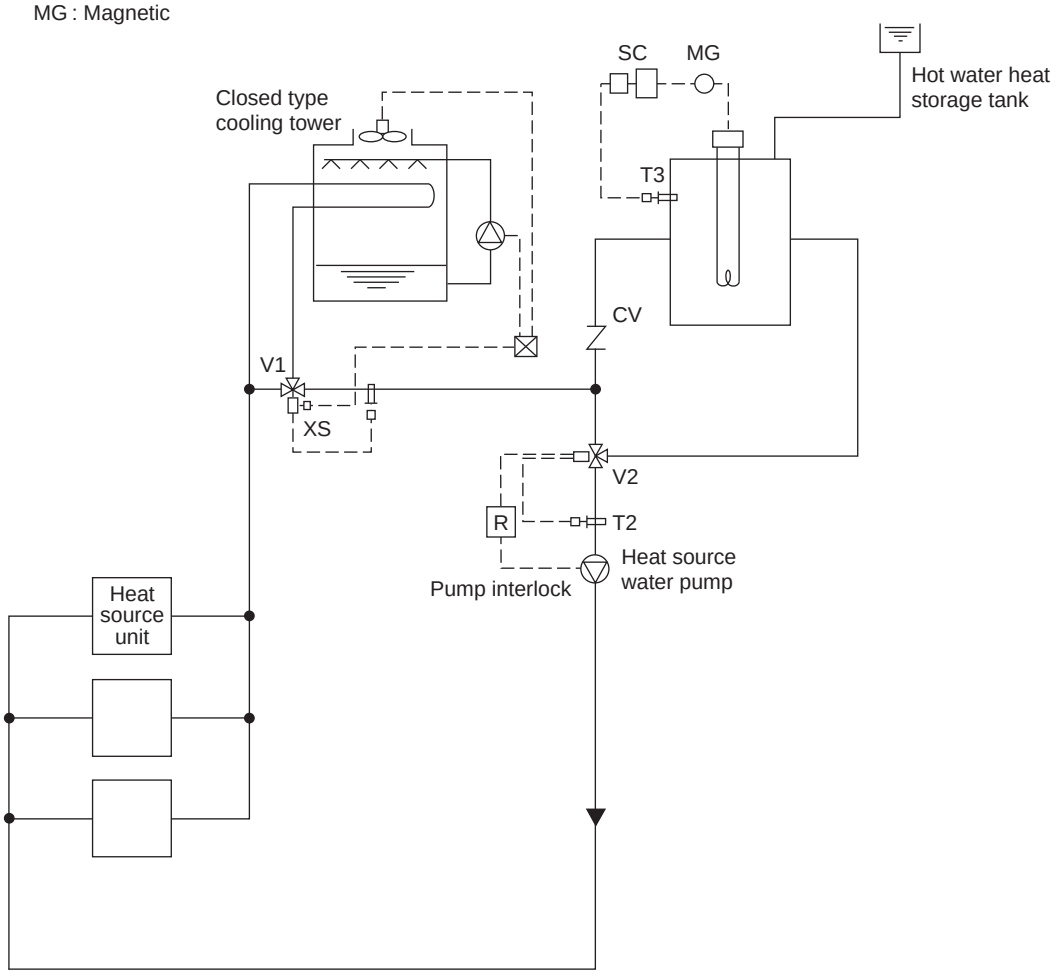

In the summer, as the circulation water temperature rises exceeding the set temperature of T1, the bypass port of V1 will open to lower the circulation water temperature. In the winter, if the circulation water temperature stays below 25°C[77°F], V2 will open/close by the command of T2 to keep the circulation water temperature constant.
The temperature of the hot water inside the heat storage tank will be controlled through the step control of the electric heater by step controller operation following the command of T3.
During the stopping of the heat source water pump, the bypass port of V2 will be closed fully by interlocking thus preventing the high temperature water from entering into the system at the starting of the pump.
The start/stop control of the fan and pump of the closed type cooling tower is applied with the step control of the fan and pump following the command of the auxiliary switch XS of V1, that operates only the fan at the light load while the fan and pump at the maximum load thus controlling water temperature and saving motor power.

Example-3 Combination of closed type cooling tower and boiler

T1 : Proportional type, insertion system thermostat
T2 : Proportional type, insertion system thermostat
T3 : Proportional type, insertion system thermostat
V1 : Proportional type, motor-driven 3-way valve
S : Selector switch
R : Relay
XS : Auxiliary switch (Duplex switch type)

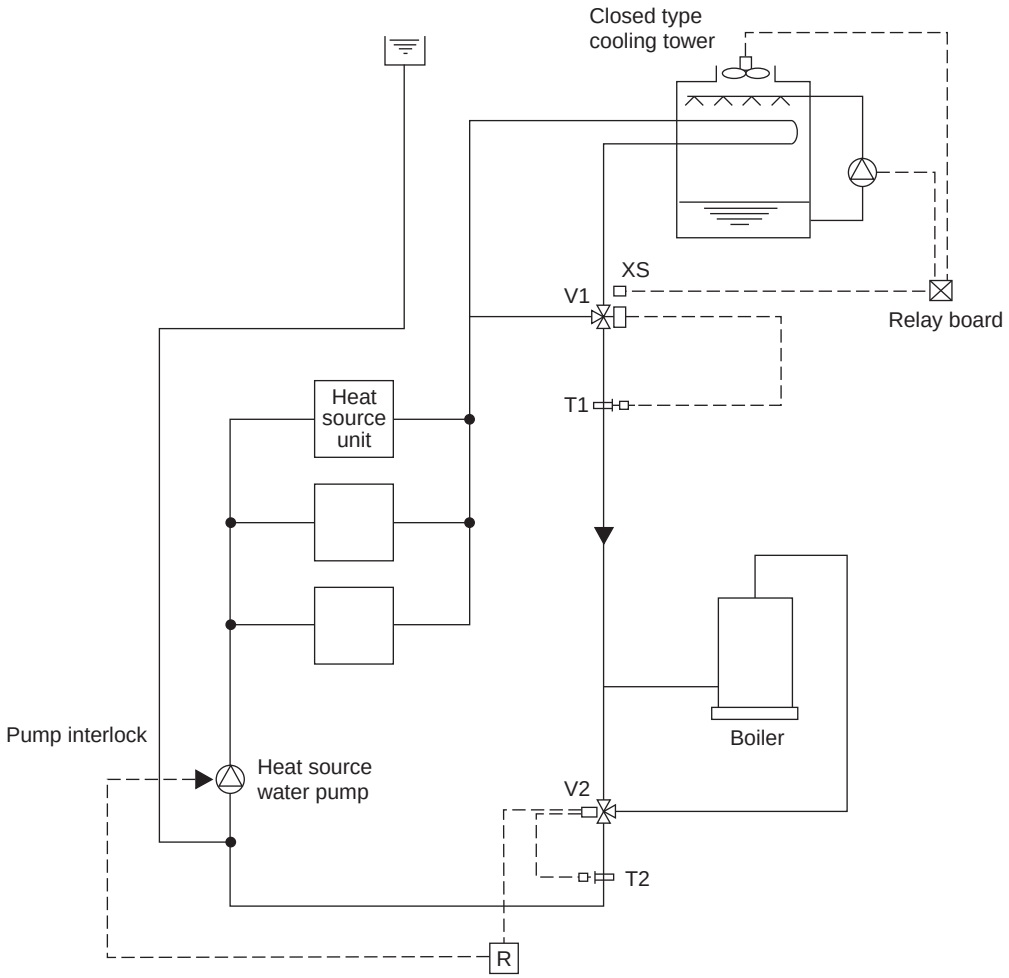

In the summer, as the circulation water temperature rises exceeding the set temperature of T1, the bypass port of V1 will close to lower the circulation water temperature. In the winter, if the circulation water temperature drops below 25°C[77°F], V2 will conduct water temperature control to keep the circulation water temperature constant.
During the stopping of the heat source water pump, the bypass port of V2 will be closed fully by interlocking.
The start/stop control of the fan and pump of the closed type cooling tower is applied with the step control following the command of the auxiliary switch XS of V1, thus controlling water temperature and saving motor power.

Example-4 Combination of closed type cooling tower and heat exchanger (of other heat source)

T1 : Proportional type, insertion system thermostat
T2 : Proportional type, insertion system thermostat
V1 : Proportional type, motor-driven 3-way valve
V2 : Proportional type, motor-driven 3-way valve
S : Selector switch
R : Relay
XS : Auxiliary switch (Duplex switch type)

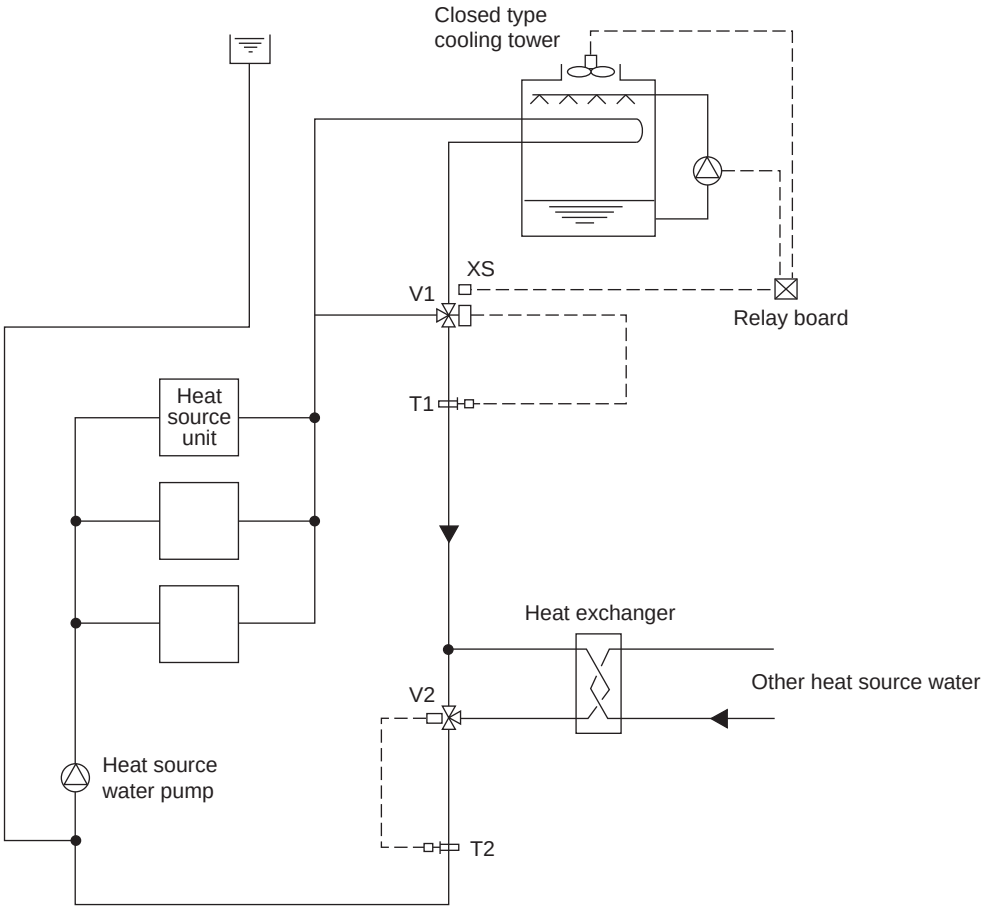

In the summer, as the circulation water temperature rises exceeding the set temperature of T1, the bypass port of V1 will close to lower the circulation water temperature. In the winter, if the circulation water temperature drops below 26°C[79°F], V2 will conduct water temperature control to keep the circulation water temperature constant.
During the stopping of the heat source water pump, the bypass port of V2 will be closed fully by interlocking.
The start/stop control of the fan and pump of the closed type cooling tower is applied with the step control following the command of the auxiliary switch XS of V1, thus controlling water temperature and saving motor power.

WR2

6) Pump interlock circuit

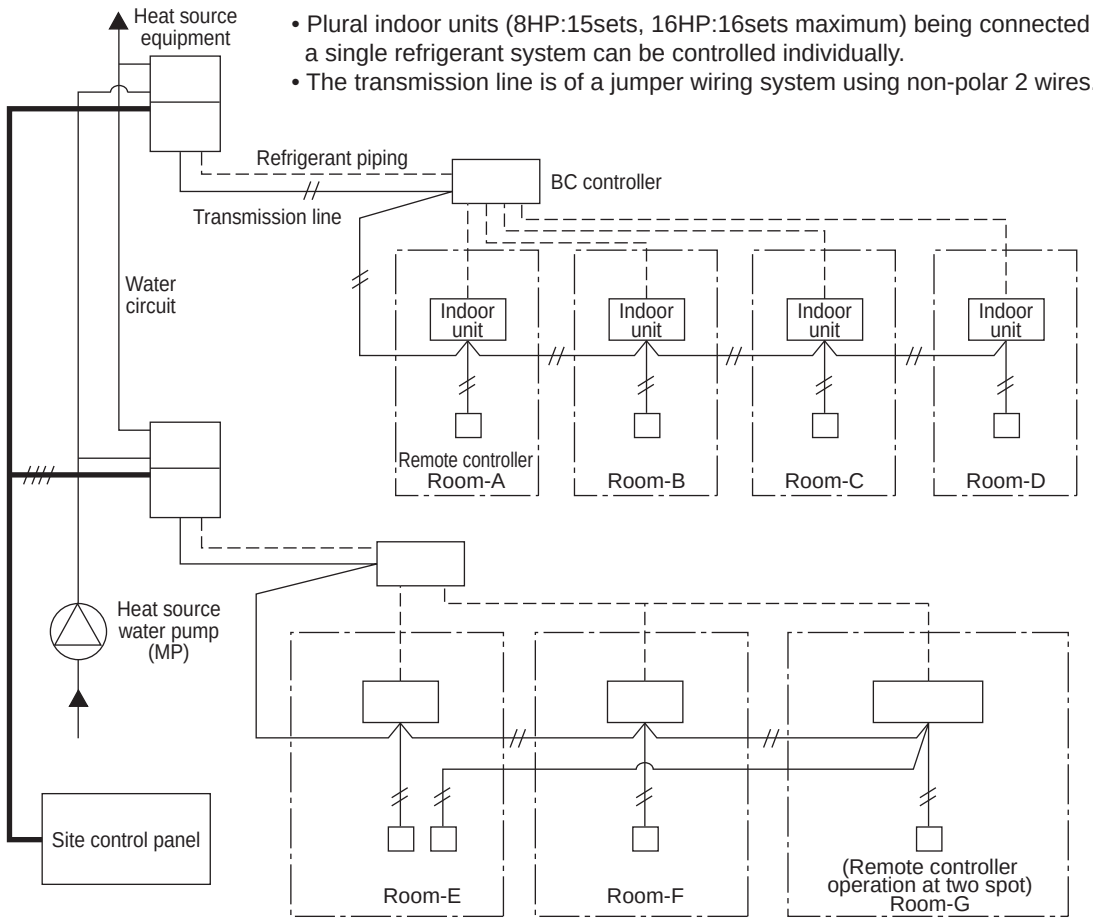

- Plural indoor units (8HP:15sets, 16HP:16sets maximum) being connected to a single refrigerant system can be controlled individually.
- The transmission line is of a jumper wiring system using non-polar 2 wires.

Wiring diagram

This circuit uses the “Terminal block for pump interlock (TB8)“ inside the electrical parts box of the heat source equipment. This circuit is for interlocking of the heat source equipment operation and the heat source water pump.

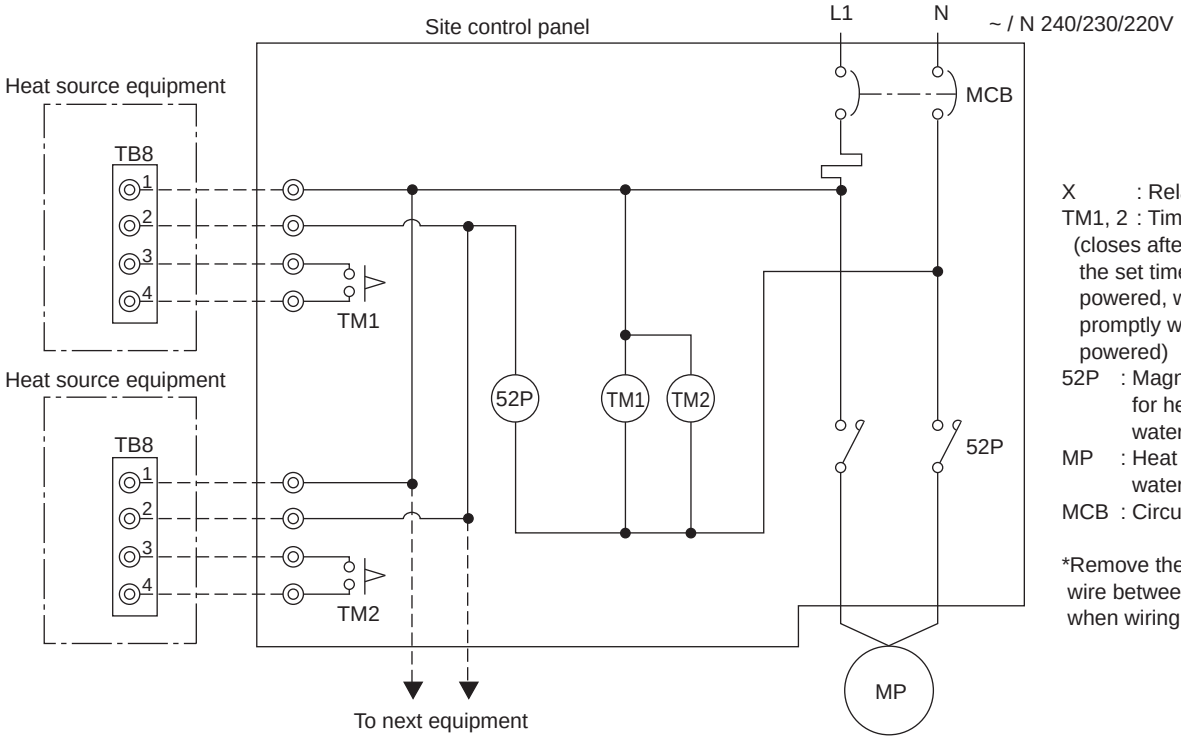

X : Relay
TM1, 2 : Timer relay (closes after elapsing the set time when it is powered, while opens promptly when it is not powered)
52P : Magnetic contactor for heat source water pump
MP : Heat source water pump
MCB : Circuit breaker

*Remove the short circuit wire between 3 and 4 when wiring to TB8.

WR2

Operation ON signal

Terminal No.	TB8-1, 2
Output	Relay contacts output Rated voltage : L1 - N : 220 ~ 240V Rated load : 1A
Operation	• When Dip switch 2-7 is OFF The relay closes during compressor operation. • When DIP switch 2-7 is ON. The relay closes during reception of cooling or the heating operation signal from the controller. (Note : It is output even if the thermostat is OFF (when the compressor is stopped).)

Pump Interlock

Terminal No.	TB8-3, 4
Input	Level signal
Operation	If the circuit between TB8-3 and TB8-4 is open, compressor operation is prohibited.

7-2. Water piping work

Although the water piping for the CITY MULTI WR2 system does not differ from that for ordinary air conditioning systems, pay special attention to the items below in conducting the piping work.

1) Items to be observed on installation work

- In order to equalize piping resistance for each unit, adapt the reverse return system.
- Mount a joint and a valve onto the water outlet/inlet of the unit to allow for maintenance, inspection and replacement work. Be sure to mount a strainer at the water inlet piping of the unit. (The strainer is required at the circulation water inlet to protect the heat source unit.)

* The installation example of the heat source unit is shown right.

- Be sure to provide an air relief opening on the water piping properly, and purge air after feeding water to the piping system.
- Condensate will generate at the low temperature part inside the heat source equipment. Connect drain piping to the drain piping connection located at the bottom of the heat source equipment to discharge it outside the equipment.
- At the center of the header of the heat exchanger water inlet inside the unit, a plug for water discharge is being provided.
  Use it for maintenance work or the like.
- Mount a backflow prevention valve and a flexible joint for vibration control onto the pump.
- Provide a sleeve to the penetrating parts of the wall to prevent the piping.
- Fasten the piping with metal fitting, arrange the piping not to expose to cutting or bending force, and pay sufficient care for possible vibration.
- Be careful not to erroneously judge the position of the inlet and outlet of water.
  (Lower position : Inlet, Upper position : Outlet)
- When connecting heat source unit water piping and water piping on site, apply liquid sealing material for water piping over the sealing tape before connection. (for Maximum water pressure above 1.0MPa)
- Wrap the sealing tape as follows.

① Wrap the joint with sealing tape in the direction of the threads (clockwise), and do not let the tape run over the edge.
② Overlap the sealing tape by two-thirds to three-fourths of its width on each turn. Press the tape with your fingers so that it is pressed firmly against each thread.
③ Leave the 1.5th through 2nd farthest threads away from the pipe end unwrapped.

- Hold the pipe on the unit side in place with a spanner when installing the pipes or strainer. Tighten screws to a torque of 150N·m.

2) Thermal insulation work

Thermal insulation or anti sweating work is not required for the piping inside buildings in the case of the CITY MULTI WR2 system if the operating temperature range of circulation water stays within the temperature near the normal (summer : 29.4°C[85°F], winter : 21.1°C[70°F]).
In case of the conditions below, however, thermal insulation is required.

- Use of well water for heat source water
- Outdoor piping portions
- Indoor piping portions where freezing may be caused in winter
- A place where vapor condensation may be generated on piping due to an increase in dry bulb temperature inside the ceiling caused by the entry of fresh outdoor air
- Drain piping portions

Installation example of heat source unit

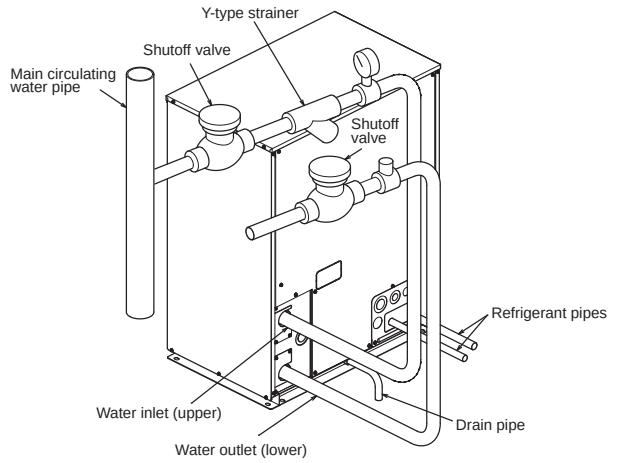

3) Water treatment and water quality control

For the circulation water cooling tower of the CITY MULTI WR2 system, employment of the closed type is recommended to keep water quality. However, in the case that an open type cooling tower is employed or the circulating water quality is inferior, scale will adhere onto the water heat exchanger leading to the decreased heat exchange capacity or the corrosion of the heat exchanger. Be sufficiently careful for water quality control and water treatment at the installation of the circulation water system

- Removal of impurities inside piping
  Be careful not to allow impurities such as welding fragment, remaining sealing material and rust from mixing into the piping during installation work.
- Water treatment
  The water quality standards have been established by the industry (Japan Refrigeration, Air Conditioning Industry Association, in case of Japan) for water treatment to be applied.

Items		Lower mid-range temperature water system		Tendency	
		Recirculating water [20<T<60°C] [68<T<140°F]	Make-up water	Corrosive	Scale-forming
Standard items	pH (25°C[77°F])	7.0 ~ 8.0	7.0 ~ 8.0	○	○
	Electric conductivity (mS/m) (25°C[77°F]) (μS/cm) (25°C[77°F])	30 or less [300 or less]	30 or less [300 or less]	○	○
	Chloride ion (mg Cl^-/ℓ)	50 or less	50 or less	○	
	Sulfate ion (mg SO_4^{2-}/ℓ)	50 or less	50 or less	○	
	Acid consumption (pH4.8) (mg $CaCO_3$/ℓ)	50 or less	50 or less		○
	Total hardness (mg $CaCO_3$/ℓ)	70 or less	70 or less		○
	Calcium hardness (mg $CaCO_3$/ℓ)	50 or less	50 or less		○
	Ionic silica (mg SiO_2/ℓ)	30 or less	30 or less		○
Reference items	Iron (mg Fe/ℓ)	1.0 or less	0.3 or less	○	○
	Copper (mg Cu/ℓ)	1.0 or less	0.1 or less	○	
	Sulfide ion (mg S^{2-}/ℓ)	not to be detected	not to be detected	○	
	Ammonium ion (mg NH_4^+/ℓ)	0.3 or less	0.1 or less	○	
	Residual chlorine (mg Cl/ℓ)	0.25 or less	0.3 or less	○	
	Free carbon dioxide (mg CO_2/ℓ)	0.4 or less	4.0 or less	○	
	Ryzner stability index	–	–	○	○

Reference : Guideline of Water Quality for Refrigeration and Air Conditioning Equipment. (JRA GL02E-1994)

WR2

In order to keep the water quality within such standards, you are kindly requested to conduct bleeding-off by overflow and periodical water quality tests, and use inhibitors to suppress condensation or corrosion. Since piping may be corroded by some kinds of inhibitor, consult an appropriate water treatment expert for proper water treatment.

4) Pump interlock

Operating the heat source unit without circulation water inside the water piping can cause a trouble. Be sure to provide interlocking for the unit operation and water circuit. Since the terminal block is being provided inside the unit, use it as required.

8-1. JOINT

Piping for CITY MULTI can be easily done with Joints and headers provided by MITSUBISHI ELECTRIC CORP..
There are 3 sets of Joints selectable for piping. Details for applying the Joint sets are referable to System Design 3, or their own Installation Manual.

CMY-Y102S-G2

mm

For Gas pipe:

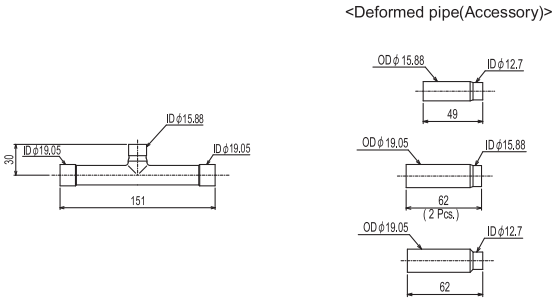

For Liquid pipe:

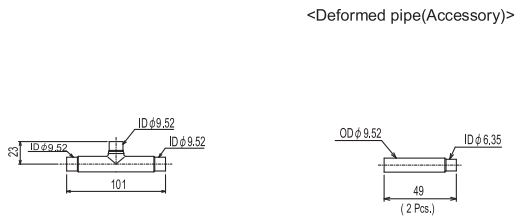

ID: Inner Diameter OD: Outer Diameter

CMY-Y102L-G2

mm

For Gas pipe:

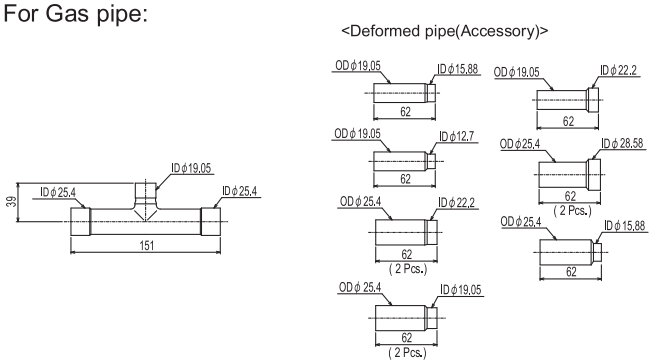

For Liquid pipe:

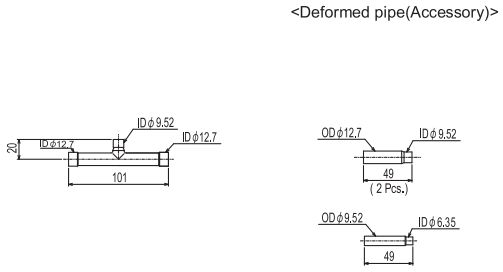

ID: Inner Diameter OD: Outer Diameter

CMY-Y202-G2

mm

For Gas pipe:

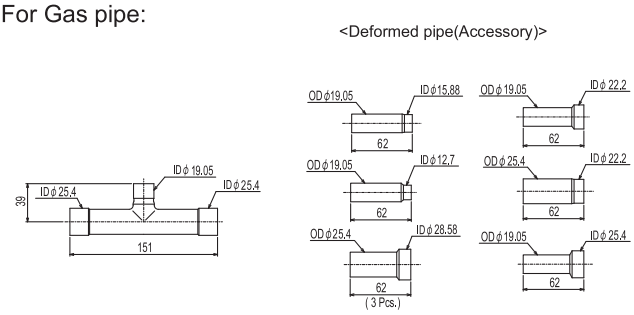

For Liquid pipe:

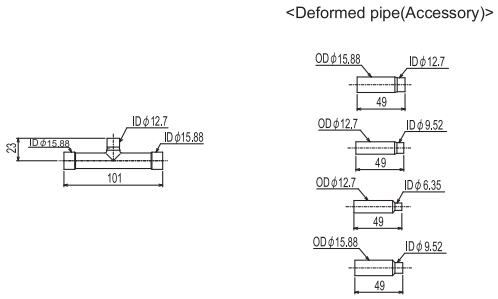

ID: Inner Diameter OD: Outer Diameter

WR2

CMY-Y302-G2

mm

For Gas pipe:

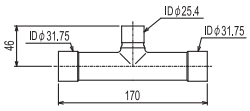

<Deformed pipe(Accessory)>

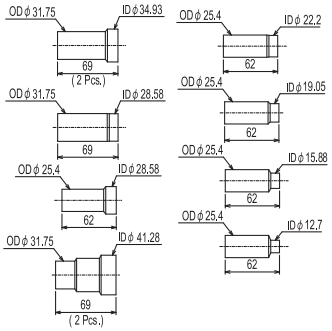

For Liquid pipe:

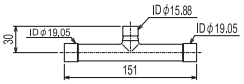

<Deformed pipe(Accessory)>

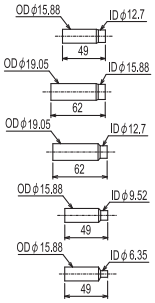

ID: Inner Diameter OD: Outer Diameter

8-2. OUTDOOR TWINNING KIT

For PQRY-P-YSHM-A, following optional Outdoor Twinning Kit is needed to use to combine to refrigerant flows of its PQRY-P-YHM-A. Details of selecting the proper kit should be referred to the System Design Section.

CMY-Q100VBK

Low-pressure pipe twinning kit

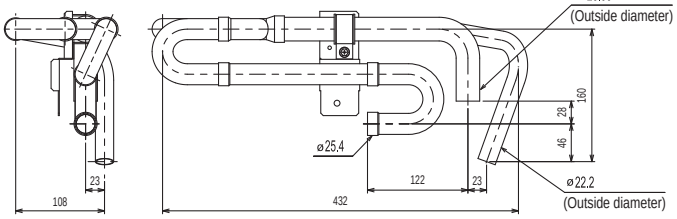

<Elbow pipe(Accessory)>

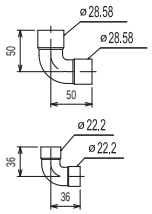

<Pipe for routing through the front (Accessory)>

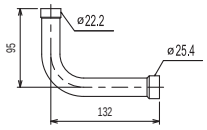

High-pressure twinning pipe

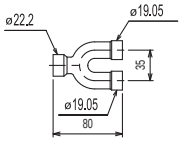

<Deformed pipe(Accessory)>

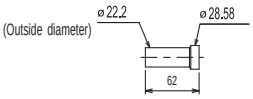

<Pipe for routing through the front (Accessory)>

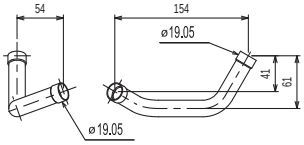

Note 1. Reference the attitude angle of the branch pipe below the fig.

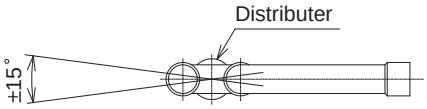

The angle of the branch pipe for hign pressure is within ±15° against the horizontal plane.

2. Use the attached pipe to braze the port-opening of the distributer.
3. Pipe diameter is indicated by inside diameter.

WR2

8-3. JOINT KIT "CMY-R160-J1" FOR BC CONTROLLER

Joint kit "CMY-R160-J1" for BC controller is used to combine 2 ports of the BC controller at a PQRY-P-Y(S)HM-A system so as to enable down-stream Indoor capacity above P80 as shown in Fig. 1.

The Joint kit include following items:

①Instruction	②Joint pipe(Small)	③Joint pipe(Large)	④Cover 1	⑤Cover 2	⑥Cover 3	⑦Band	⑧Reducer 1	⑨Reducer 2
							OD19.05-ID22.2	OD19.05-ID15.88
This sheet 1pc	1pc	1pc	2pcs	1pc for gas side	1pc for liquid side	8pcs	1pc	1pc

Please prepare the following items in the field. ①Tape for insulation material sealing ②Extension pipe for refrigerant circuit Ref.: WT05840X01_01

②Joint pipe (for liquid side)

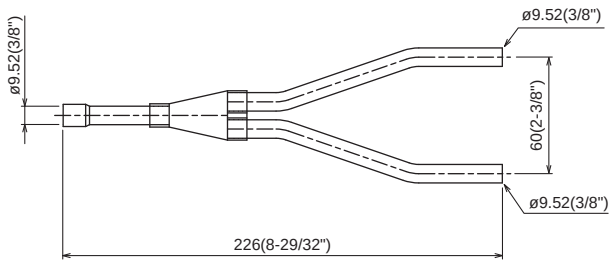

③Joint pipe (for gas side)

mm(in.)

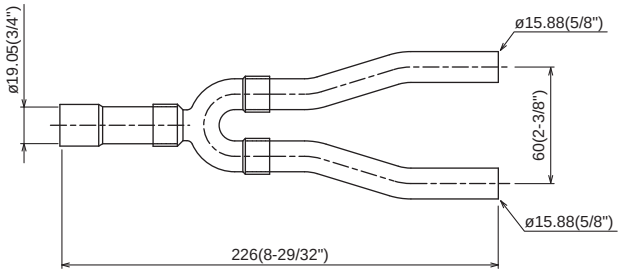

1. Designing CMY-R160-J1 to a PQRY-P-Y(S)HM-A system

The maximum down-stream Indoor capacity for 1 port of BC controller is P80. When the down-stream Indoor capacity is above P80, Joint kit CMY-R160-J1 is needed to combined 2 ports of BC controller to enlarge the capacity, like Group 2 and 3 in Fig. 1.

Maximum 3 Indoor units are allowed to connect to 1 port of BC controller or 2 combined ports of BC controller using CMY-R160-J1.

When connecting Indoor units to 1 port of BC controller or 2 combined ports of BC controller using CMY-R160-J1 or CMY-Y102S-G2 is applicable, like Group 1 and 2 in Fig. 1

Caution: Mixed cooling and heating mode at the same time for Indoor units connecting to 1 port or 2 combined ports is not available.

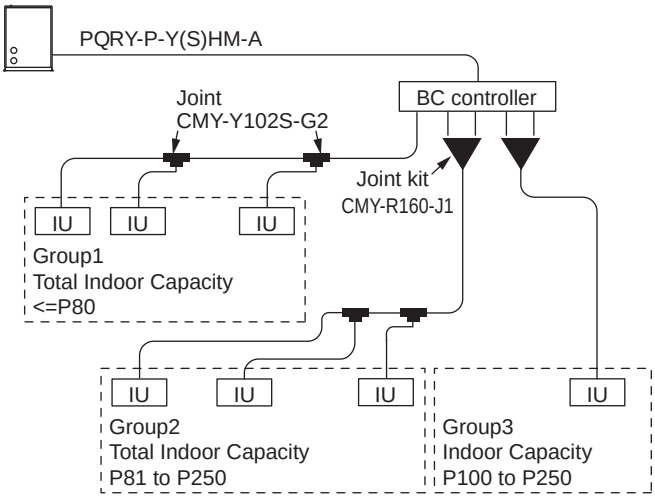

Fig.1. CMY-R160-J1 applying scheme Ref.: WT05840X01_02

2. Piping at the installation site

The connection of CMY-R160-J1 to BC controller and pipe leading to Indoor units is referable to Fig. 2. Non-oxidized brazing is necessary. All piping must be careful to avoid foreign material getting inside.

After piping and air-tight testing, insulation work to the Joint and pipe should be done. Details is available at the Installation Manual.

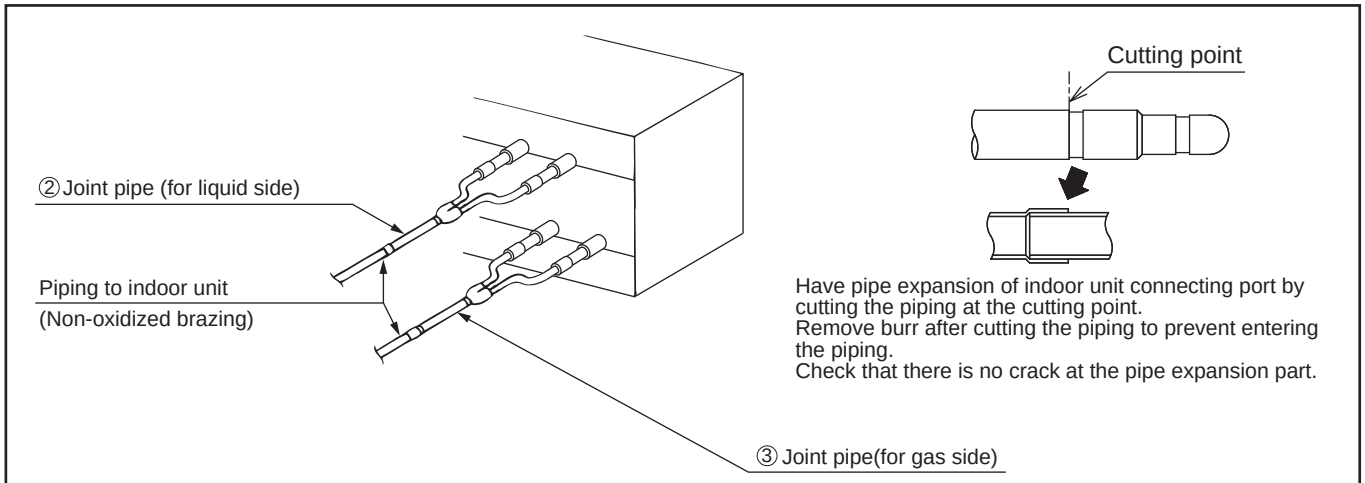

Fig.2. Connecting CMY-R160-J1 Ref.: WT05840X01_03

Ref: CMY_R160_J_DOC_EUDB

WR2

CITY MULTI CONTROLLER

1. MITSUBISHI ELECTRIC's Air-conditioner Network System. (MELANS) ..... 3 - 2
   1-1.Function table of controllers ..... 3 - 3
2. Local remote controller ..... 3 - 4
   2-1.MA remote controller [PAR-21MAA] ..... 3 - 4
   2-2.ME remote controller [PAR-F27MEA] ..... 3 - 5
   2-3.Simple MA remote controller [PAC-YT51CRB] ..... 3 - 6
   2-4.Simple ME remote controller [PAC-SE51CRA] ..... 3 - 7
   2-5.Wireless remote controller [PAR-FL32MA / PAR-FA32MA] ..... 3 - 8
   2-6.LOSSNAY remote controller [PZ-52SF] ..... 3 - 9
   2-7.LOSSNAY remote controller for LGH-RX5-E60 [PZ-60DR-E] ..... 3 - 10
3. System remote controller ..... 3 - 11
   3-1.Group remote controller [PAC-SC30GRA] ..... 3 - 11
   3-2.System remote controller [PAC-SF44SRA] ..... 3 - 13
   3-3.Schedule timer [PAC-YT34STA] ..... 3 - 15
   3-4.ON/OFF remote controller [PAC-YT40ANRA] ..... 3 - 17
   3-5.Centralized controller [AG-150A] ..... 3 - 19
   3-6.Centralized controller [GB-50A] ..... 3 - 28
   3-7.Power supply unit [PAC-SC51KUA] ..... 3 - 36
   3-8.Expansion Controller [PAC-YG50ECA] ..... 3 - 39
   3-9.Integrated centralized control software [TG-2000A] ..... 3 - 42
   3-10.Electric amount count software [PAC-YG11CDA] ..... 3 - 48
   3-11.PLC software for general equipment [PAC-YG21CDA] ..... 3 - 49
   3-12.BM ADAPTER [BAC-HD150] ..... 3 - 50
   3-13.PLC software for demand input [PAC-YG41CDA] ..... 3 - 52
   3-14.LonWorks® interface [LMAP02-E] ..... 3 - 54
   3-15.Transmission booster [PAC-SF46EPA] ..... 3 - 56
   3-16.PI controller [PAC-YG60MCA] ..... 3 - 57
   3-17.DIDO controller [PAC-YG66DCA] ..... 3 - 63
   3-18.AI controller [PAC-YG63MCA] ..... 3 - 73
4. System component ..... 3 - 82
   4-1.S, Y, HP, R2 series ..... 3 - 82
   4-2.Outdoor unit input/output connector ..... 3 - 84
   4-3.WY, WR2 series ..... 3 - 86
   4-4.Heat source unit input/output connector ..... 3 - 88
   4-5.Indoor unit "-E" type input/output connector ..... 3 - 89

System Controller

MITSUBISHI ELECTRIC's Air-conditioner Network System (MELANS) leads air conditioner management a PC browser and Network era.

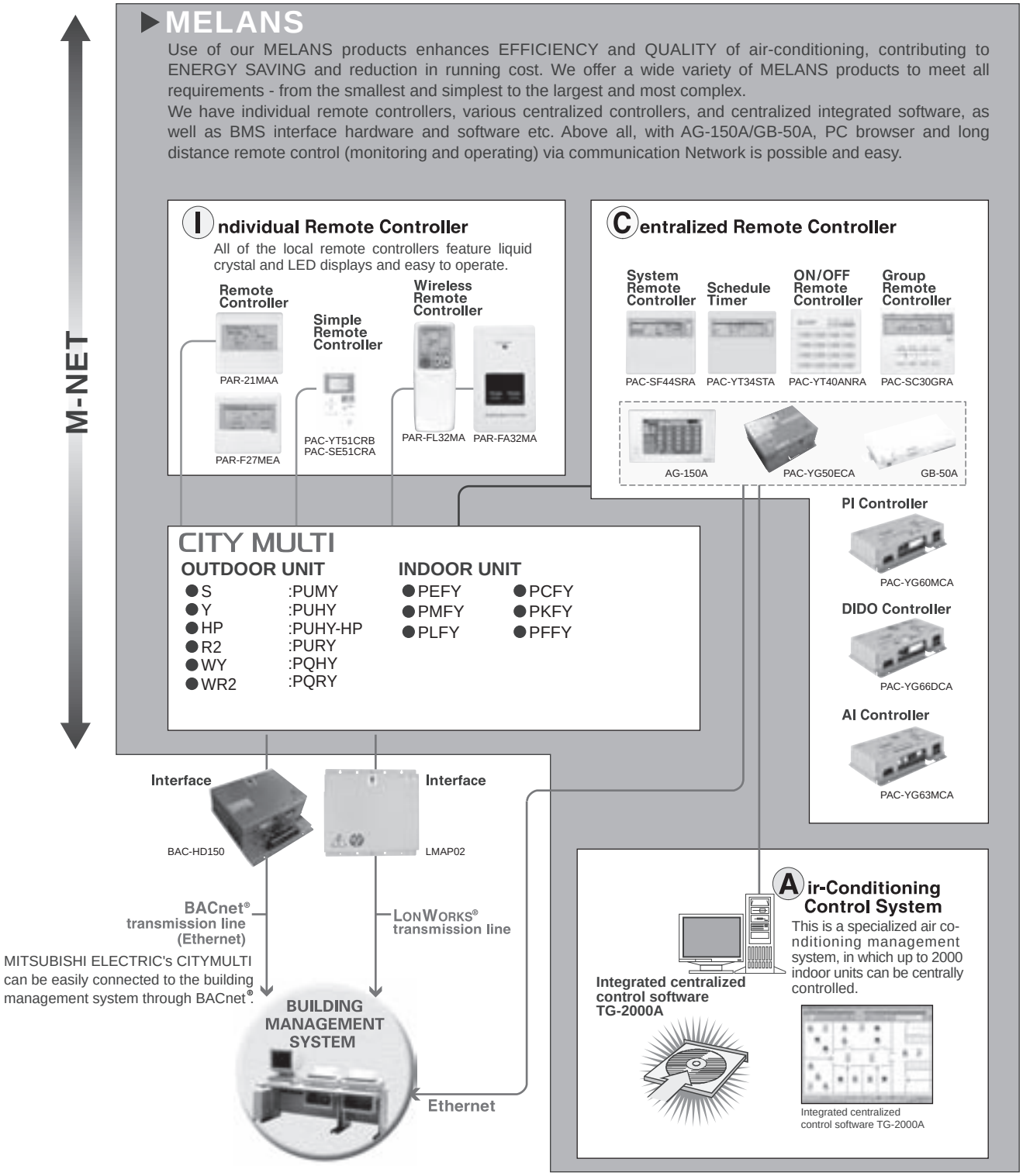

*Some controllers cannot be used in combination with certain models of devices.

1-1. Function table of controllers

Model	Local remote controller *10					System controller *10										
	PAR-21MAA	PAR-F27MEA	PAC-YT51CRB	PAC-SE51CRA	PAR-FL32MA	PAC-YT40ANRA	PAC-SC30GRA	PAC-SF44SRA	PAC-YT34STA	AG-150A		AG-150A+ PAC-YG50ECA		GB-50A		TG-2000A*4*5
Controllable Groups/Indoors (Group / Indoor) *9	1 / 16	1 / 16	1 / 16	1 / 16	1 / 16	16 / 50	8 / 16	50 / 50	50 / 50	50 / 50		150/150 *11		50 / 50		2000 / 2000
										AG-150A	Browser *4	AG-150A	Browser *4	GB-50A	Browser *4	
■Operating																
ON/OFF	○	○	○	○	○	◎	◎	◎	◎	◎ ■	◎ ■	◎■	◎ ■	▲	◎ ■	◎ ■
Mode(cool/heat/dry/fan)	○	○	○	N	○	N	◎	◎	N	◎ ■	◎ ■	◎■	◎ ■	N	◎ ■	◎ ■
Temperature-set	○	○	○	○	○	N	◎	◎	N	◎ ■	◎ ■	◎■	◎ ■	N	◎ ■	◎ ■
Local Permit/Prohibit	N	N	N	N	N	N	N	◎	◎	◎ ■	◎ ■	◎■	◎ ■	N	◎ ■	◎ ■
Fan speed	○	○	○	○	○	N	◎	◎	N	◎ ■	◎ ■	◎■	◎ ■	N	◎ ■	◎ ■
Air-flow direction	○	○	N	N	○	N	◎	◎	N	◎ ■	◎ ■	◎■	◎ ■	N	◎ ■	◎ ■
■Status monitoring																
ON/OFF	○	○	○	○	○	◎	◎	◎	◎	◎	○	◎	○	▲	○	○ ■
Mode(cool/heat/dry/fan)	○	○	○	○	○	N	○	○	N	○	○	○	○	N	○	○
Temperature-set	○	○	○	○	○	N	○	○	N	○	○	○	○	N	○	○
Local Permit / Prohibit	○	○	○	○	○	○	○	○	○	○	○	○	○	N	○	○
Fan speed	○	○	○	○	○	N	○	○	N	○	○	○	○	N	○	○
Air-flow direction	○	○	N	N	○	N	○	○	N	○	○	○	○	N	○	○
Indoor temperature	○	○	N	N	N	N	○	N	N	○	○	○	○	N	○	○
Filter sign	○	○	N	N	N	N	○	○	N	○	○	○	○	N	○	○
Error flashing	○	○	○	○	○	○	○	○	○	○	○	○	○	▲	○	○ ■
Error code	○	○	○	○	N	○	○	○	○	○	○	○	○	N	○	○
Operation hour	N	N	N	N	N	N	N	N	N	N	N	N	N	N	N	●
■Scheduling																
One-day	○	○	N	N	N	N	N	N	N	N	●	N	●	N	●	●
Times of ON/OFF per day	8	1/1	N	N	1/1	N	N	N	16	24	24	24	24	N	12	12 or 24
Weekly	○	N	N	N	N	N	N	N	○	○(●)	○(●)	○(●)	○(●)	N	●	●
Times of ON/OFF per week	8x7	N	N	N	N	N	N	N	16x7	24x7	24x7	24x7	24x7	N	12x7	12x7 or 24x7
Annual	N	N	N	N	N	N	N	N	N	N	●	N	●	N	●	●
Optimized start-up	N	N	N	N	N	N	N	N	N	○	○	○	○	N	N	●
Auto-off timer	○	○	N	N	N	N	N	N	N	N	N	N	N	N	N	N
Min. timer setting unit (minute)	1	10	N	N	10	N	N	N	5	1	1	1	1	N	1	1
■Recording																
Error record	N	N	N	N	N	N	○	○	N	○	○	○	○	N	○	○
Daily/monthly report	N	N	N	N	N	N	N	N	N	N	N	N	N	N	N	◎
Electricity charge	N	N	N	N	N	N	N	N	N	N	N	N	N	N	N	●
■Other																
Temp-set limitation by Local R/C	○	○	○	N	N	N	N	N	N	N	N	N	N	N	N	N
Temp-set limitation by System controller*4	○*6	○	○*6	○*7	N	N	N	△	N	N	○*2*6	N	○*2*6	N	○*2*6	◎*6
Auto-lock	○	○	N	N	N	N	N	N	N	△	N	△	N	N	N	N
Night setback	N	N	N	N	N	N	N	N	N	○	○	○	○	N	N	○
Sliding temperature control	N	N	N	N	N	N	N	N	N	○	○	○	○	N	N	○
■Management (Group/Interlocked)																
Ventilation interlock	N/O	N/O	N/O	N/O	N	○	N/O	○	○	○	○/○*2	○	○/○*2	N	○/○*2	○/○
Group setting	○*1	○	○*1	○	N	○	○	○	○	○	○*2	○	○*2	N	○*2	○
Block setting	N	N	N	N	N	N	N	N	N	○	○*2	N	○*2	N	○*2	○
Revision of electricity charge	N	N	N	N	N	N	N	N	N	N	N	N	N	N	N	□●
■Operating on LOSSNAY interlocked (Group/Interlocked)																
ON/OFF	N/O	N/O	N/O	N/O*8	N/O	◎/◎*3	N/◎	◎/◎	◎/◎	◎/◎	◎/◎	◎/◎	◎/◎	▲/▲	◎/◎	◎/◎
Fan speed	N/O	N	N	N	N	N	N/O	◎/◎	N	◎/◎	◎/◎	◎/◎	◎/◎	N/N	◎/◎	◎/◎
Ventilation mode	N/N	N	N	N	N	N	N	◎/N	N	◎/N	◎/N	◎/N	◎/N	N/N	◎/N	O/N
■Status monitoring on LOSSNAY interlocked (Group/Interlocked)																
ON/OFF	N/O	N	N	N	N	N	N/O	O/O	O/O	◎/◎	◎/◎	◎/◎	◎/◎	▲/▲	◎/◎	◎/O
Fan speed	N/O	N	N	N	N	N	N/O	O/O	N	O/O	O/O	O/O	O/O	N/N	O/O	O/O
Ventilation mode	N	N	N	N	N	N	N	O/N	N	O/N	O/N	O/N	O/N	N/N	O/N	O/N

◎ : Each group / Batched; O: Each group; □ : Block (for CITY MULTI Indoor unit, not for all Mr.SLIM);
● : AG-150A/GB-50A license registration possible (●): License registration for the optional functions required N: Not Available (Not Used.) △: Batched only;
▲ : Batched handling(for maintenance) ■: Block

*1. Group setting via wiring between Indoor units with cross-over cable;
*2. Installation possible at Initial setting web browser;
*3. Inter-lock is set at Local remote controller.
*4. AG-150A/GB-50A license registration to AG-150A/GB-50A is required to monitor and operate the units by browser and TG-2000A.
5. AG-150A connected with PAC-YG50ECA is compatible with TG-2000A Ver. 6.1 or later.
*6. This function can be set only on the ME/Simple ME remote controller. This function cannot be used with the MA/Simple MA remote controller.
(But, the validity of this function with the MA/Simple MA remote controller depends on the indoor unit model, and there are possibilities that this function can be used with them.)
*7. This function is available only when applying together with TG-2000A , AG-150A and GB-50A.
*8. Inter-lock is set from system controller. (Except PAC-YT40ANRA)
*9. The maximum number of controllable units decreases depending on the indoor unit model.
*10. For indoor use only.
*11. The maximum connectable number of indoor units per expansion controller is 50. Up to three expansion controllers can be connected to each system, allowing a connection of up to indoor units.

LOSSNAY remote controller PZ-52SF

■Controllable LOSSNAY Groups	1
■Controllable LOSSNAY unit	16
■Operating	
ON/OFF	○
Mode (automatic ventilation/vent-heat interchange/normal ventilation)	○
Local Permit-Prohibit	N
Fan speed	○
Air flow direction	N
■Scheduling	N
■Recording	N
■Management	
Group setting	○
Block setting	N

■Status monitoring	
ON/OFF	○
Mode (automatic ventilation/vent-heat interchange/normal ventilation)	○
Local Permit-Prohibit	○
Fan speed	○
Air flow direction	N
Filter sign	○
Error flashing	○
Error code	○

Air conditioner control system interface

LMAP02-E : LonWorks® Interface
Controls up to 50 Groups/ 50 units,
for details, refer to its description.

PAC-YG31CDA: BACnet® Interface software
Controls up to 500 Groups/ 500 units,
for details, refer to its description.

BAC-HD150: BACnet® Interface
Controls up to 50 Groups/ 50 units,
up to 150 Groups/ 150 units with three
expansion controllers for details,
refer to its description.

○ : Each group, N: Not Available

Controller

2-1. MA remote controller [PAR-21MAA]

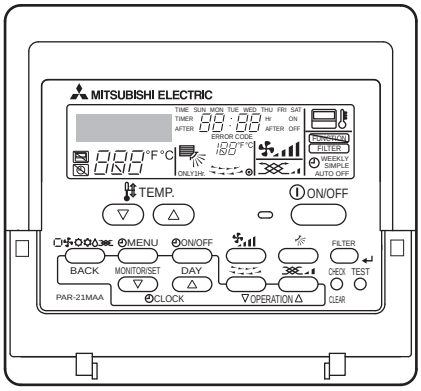

- High-quality white color body and light-green display.
- Dot LCD is applied.
  Choose from Japanese, Chinese, English, German, Spanish, Russian, Italian, French displays.
- Connectable to all CITY MULTI indoor units, and automatically adjust its function with the connected indoor unit.
- Limiting the temperature setting range is possible.
  Helps to avoid over-cooling or over-heating. Saves energy.
- Auto-stop timer is available.
  Helps to avoid forgetting to turn off the air conditioner.
- Weekly scheduler is available.
  ON/OFF/Temperature setting 8 times per day, 1 week scheduling.
- Grouping via cross-over wire directly.
- Usable as the local remote controller for system controller (MELANS)
  * Combining ME remote controller and/or LOSSNAY remote controller in a group is not possible.

■ Functions

□:Each unit ○:Each group ●:Each block
△:Each floor ◎:Collective ×:Not available

Item	Description	Operations	Display
ON/OFF	ON and OFF operation for a single group	○	○
Operation mode switching	Switches between Cool / Dry / Auto*/ Fan / Heat. Operation modes vary depending on the air conditioner unit. *Auto only supported for the City Multi R2 and WR2 series.	○	○
Temperature setting	Sets the temperature for a single group Range of temperature setting Cool/Dry : 19°C - 30°C (14°C - 30°C)/67°F - 87°F (57°F - 87°F) Heat : 17°C - 28°C (17°C - 28°C)/63°F - 83°F (63°F - 83°F) Auto : 19°C - 28°C (17°C - 28°C)/67°F - 83°F (63°F - 83°F) ( ) For PEFY/PFFY by setting DipSW 7-1 to ON and limits to NI6H fan speed only.	○	○
Fan speed setting	Models with 4 air flow speed settings: Hi/Mid-2/Mid-1/Low Models with 3 air flow speed settings: Hi/Mid/Low Models with 2 air flow speed settings: Hi/Low Fan speed setting (including Auto) varies depending on the model.	○	○
Air flow direction setting	Air flow direction angles (4-angle, or 5-angle Swing) Auto Louver ON/OFF Air flow direction settings vary depending on the model.	○	○
Weekly scheduler	ON/OFF/Temperature setting can be done up to 8 times one day in the week. The time can be set by the minute.	○	○
Permit / Prohibit local operation	Individually prohibit operation of each local remote control function (ON/OFF, Change operation mode, Set temperature, Reset filter). ※1: When the local remote controller inactivation command is received from the main system controller, " " is displayed.	×	※1 ○
Prohibition/permission of specified mode (Cooling prohibited /heating prohibited /cooling-heating prohibited)	By the setting from System Controller, the operation for the following modes is prohibited. At cooling prohibited : Cool, Dry, Auto, At heating prohibited : Heat, Auto, At cooling-heating prohibited : Cool, Heat, Dry, Auto	×	○
Indoor unit intake temperature	Measures the intake temperature of the indoor unit when the indoor unit is operating.	×	○
Error	When an error is currently occurring on an air conditioner unit, the afflicted unit and the error code are displayed.	×	□
Test run	This operates air conditioner units in test run mode.	○	○
Ventilation equipment	Up to 16 indoor units can be connected to an interlocked system that has one LOSSNAY. LOSSNAY items that can be set are "Hi" "Low" "Stop". Ventilation mode switching is not available.	○	○
Function to limit the setting range of room temperature (Set temperature range limit)	Set temperature range limit to cooling, heating, or auto mode.	○	○
Easy-to-operate simplified locking function (Auto lock function)	Setting/releasing of simplified locking for remote control switch can be performed. · Locking of all switches · Locking of all switches except ON/OFF switch	○	○

■ System example

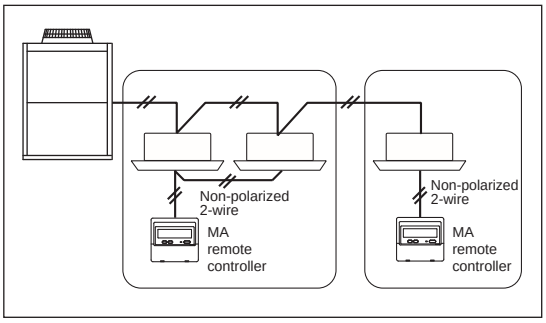

■ External dimension

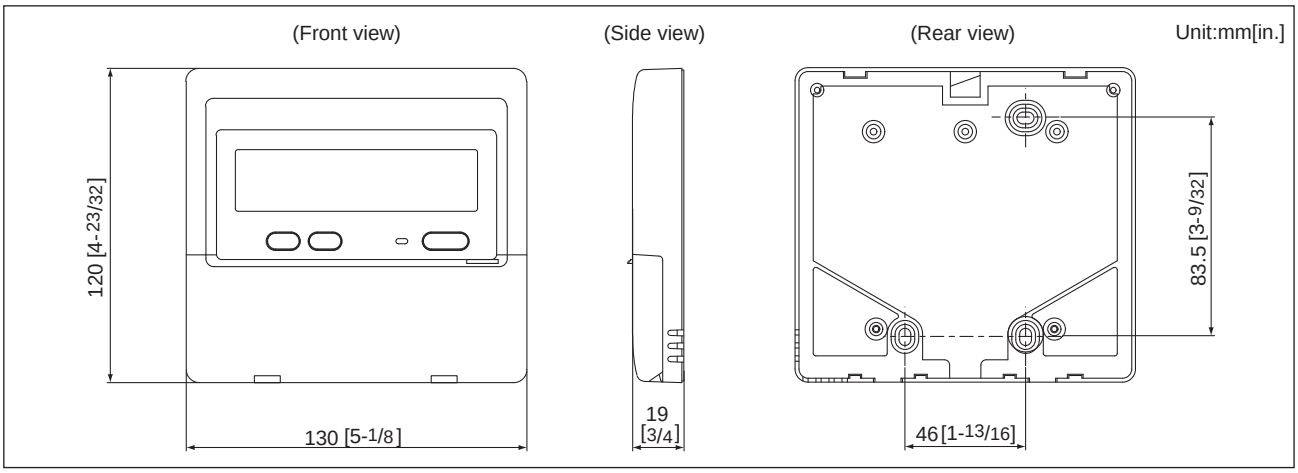

2-2. ME remote controller [PAR-F27MEA]

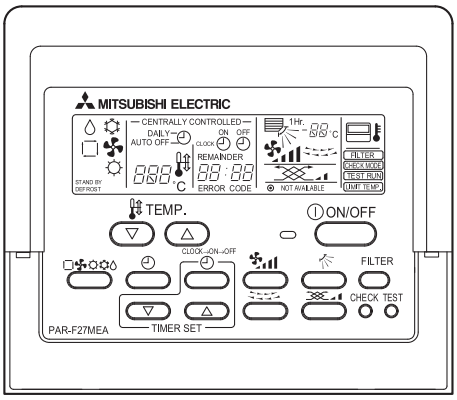

- This remote control requires non-polar wiring to only one indoor unit.
- Group operation over multiple outdoor units is possible.Grouping can be changed without re-wiring, which makes dividing rooms for tenant easier
- Timer operation
  ※: Daily timer operation of one ON/OFF setting everyday
  ※: Auto-off timer : 0:30,1:00,1:30,2:00…4:00
  ※: The setting is kept in nonvolatile memory.
- Function lock
  All functions or all functions except ON / OFF can be selected.
- Ability to limit the set temperature by oneself for system controller (upper and lower temperature can be set)
- Interlock setting and operation of LOSSNAY

■ System example

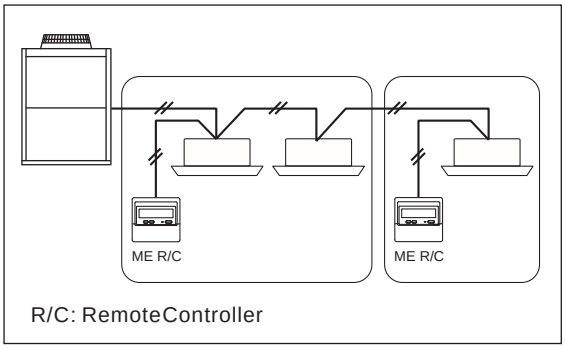

■ Functions

□:Each unit ○:Each group ●:Each block
△:Each floor ◎:Collective ×:Not available

Item	Description	Operations	Display
ON/OFF	ON and OFF operation for a single group	○	○
Operation mode switching	Switches between Cool / Dry / Auto / Fan / Heat. Operation modes vary depending on the air conditioner unit. Auto mode is the City Multi R2 and WR2 series only.	○	○
Temperature setting	Sets the temperature for a single group Range of temperature setting Cool/Dry : 19˚C - 30˚C (14˚C - 30˚C) Heat : 17˚C - 28˚C (17˚C - 28˚C) Auto : 19˚C - 28˚C (17˚C - 28˚C)	○	○
Fan speed setting	Models with 4 air flow speed settings: Hi/Mid-2/Mid-1/Low Models with 3 air flow speed settings: Hi/Mid/Low Models with 2 air flow speed settings: Hi/Low Fan speed setting varies depending on the model.	○	○
Air flow direction setting	Air flow direction angles (4-angle, Swing) Louver ON/OFF Air flow direction settings vary depending on the model.	○	○
Permit / Prohibit local operation	Individually prohibit operation of each local remote control function (ON/OFF, Change operation mode, Set temperature, Reset filter). ※1: When the local remote controller inactivation command is received from the master system controller, "-CENTRALLY CONTROLLED-" is displayed.	×	※1 ○
Prohibition/permission of specified mode (Cooling prohibited /heating prohibited /cooling-heating prohibited)	By the setting from System Controller, the operation for the following modes is prohibited. At cooling prohibited : Cool, Dry, Auto, At heating prohibited : Heat, Auto, At cooling-heating prohibited : Cool, Heat, Dry, Auto	×	○
Indoor unit intake temperature	Measures the intake temperature of the indoor unit when the indoor unit is operating.	×	○
Error	When an error is currently occurring on an air conditioner unit, the afflicted unit and the error code are displayed.	×	□
Timer operation	Thanks to the three timer modes equipped, a proper mode can be selected to meet the usage. One day timer : ON/OFF setting of one time on one day can be applied. Daily timer : ON/OFF setting by the One day timer can be repeated for everyday. Auto OFF timer : OFF timer can be set in a range from 30 minutes to 4 hours. ※Setting of Auto OFF timer automatically activates OFF timer at the next operation. This function can be utilized to prevent the negligence of OFF setting.	○	○
Test run	This operates air conditioner units in test run mode.	○	○
Ventilation equipment	Up to 16 indoor units can be connected to an interlocked system that has one LOSSNAY. LOSSNAY items that can be set are "Hi" "Low" "Stop". Ventilation mode switching is not available.	○	○
Function to limit the setting range of room temperature (Set temperature range limit)	Set temperature range limit to cooling, heating, or auto mode.	○	○
Easy-to-operate simplified locking function (Auto lock function)	Setting/releasing of simplified locking for remote control switch can be performed. ・Locking of all switches ・Locking of all switches except ON/OFF switch	○	○

■ External dimension

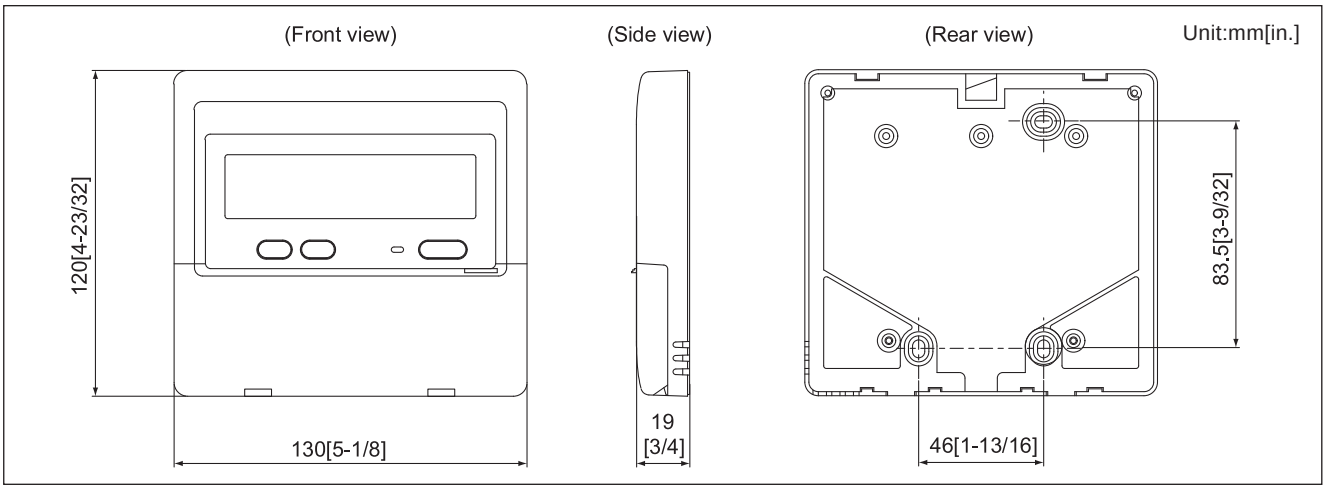

2-3. Simple MA remote controller [PAC-YT51CRB]

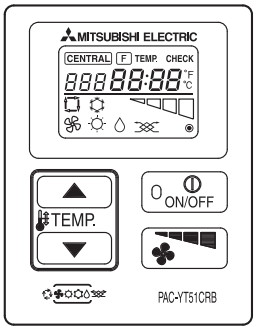

- Control:ON/OFF, room temperature, fan speed, and operation mode
- The only wiring required is cross-over wiring based on two-wire signal lines.
- Room temperature sensors are built-in.
- Set temperature range limit
- Can operate all types of indoor units

∗: Since this controller has limited functions, it should always be used in conjunction with standard controller or centralized controller.

■ Functions

□:Each unit ○:Each group ■:Each block
△:Each floor ◎:Collective ×:Not available

Item	Description	Operations	Display
ON/OFF	ON and OFF operation for a single group	○	○
Operation mode switching	Switches between Cool / Dry / Auto*/ Fan / Heat. Operation modes vary depending on the air conditioner unit. *Auto only supported for the City Multi R2 and WR2 series.	○	○
Temperature setting	Sets the temperature for a single group Range of temperature setting Cool/Dry : 19℃ - 30℃ (14℃ - 30℃) / 67℉ - 87℉ (57℉ - 87℉) Heat : 17℃ - 28℃ (17℃ - 28℃) / 63℉ - 83℉ (63℉ - 83℉) Auto : 19℃ - 28℃ (17℃ - 28℃) / 67℉ - 83℉ (63℉ - 83℉)	○	○
Fan speed setting	Models with 4 air flow speed settings: Hi/Mid-2/Mid-1/Low Models with 3 air flow speed settings: Hi/Mid/Low Models with 2 air flow speed settings: Hi/Low Fan speed setting (including Auto) varies depending on the model.	○	○
Air flow direction setting	Air flow direction angles (4-angle, Swing) Louver ON/OFF Air flow direction settings vary depending on the model.	×	×
Timer operation	Not available	×	×
Permit / Prohibit local operation	Individually prohibit operation of each local remote control function (ON/OFF, Set temperature). ∗1: When the local remote controller inactivation command is received from the main system controller, "CENTRAL" is displayed.	×	∗1 ○
Indoor unit intake temperature	Measures the intake temperature of the indoor unit only when the indoor unit is operating.	×	×
Error	When an error is currently occurring on an air conditioner unit, the afflicted unit and the error code are displayed.	×	□
Test run	This operates air conditioner units in test run mode. ∗2: The display for test run mode will be the same as for normal ON/OFF (no display "test run").	○	∗2 ○
Ventilation equipment	Up to 16 indoor units can be connected to an interlocked system that has one LOSSNAY.	○	×
Function to limit the setting range of room temperature (Set temperature range limit)	Set temperature range limit to cooling, heating, or auto mode.	○	○
Prohibition/permission of specified mode /heating prohibited /cooling-heating prohibited)	By the setting from System Controller, the operation for the following modes is prohibited. At cooling prohibited : Cool, Dry, Auto, At heating prohibited : Heat, Auto, At cooling-heating prohibited : Cool, Heat, Dry, Auto	×	○

■ System example

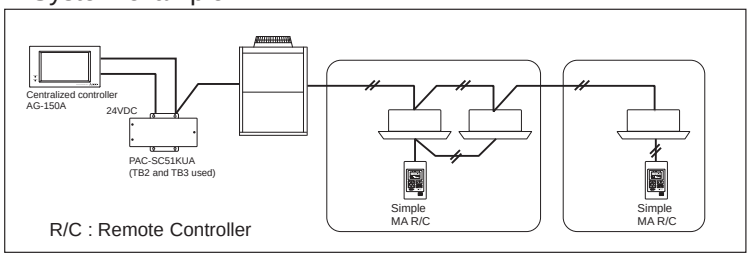

■ External dimension

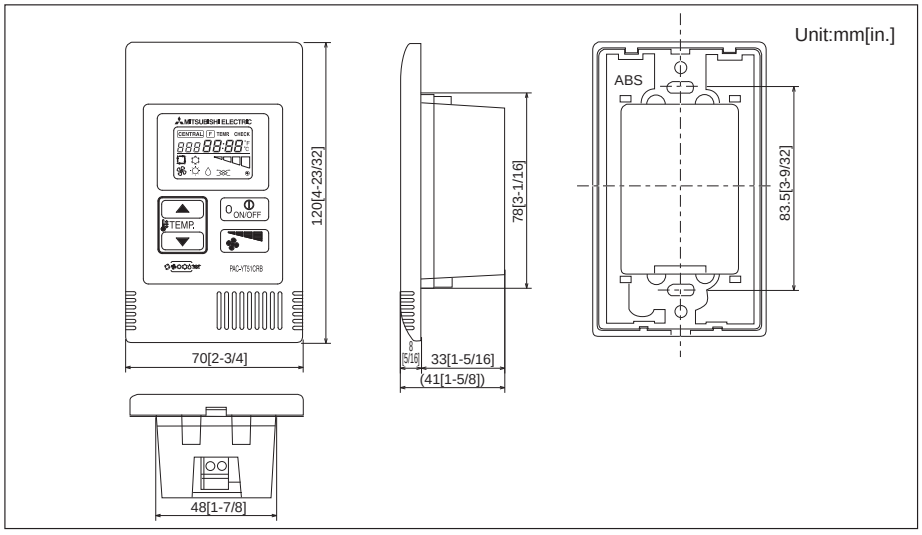

2-4. Simple ME remote controller [PAC-SE51CRA]

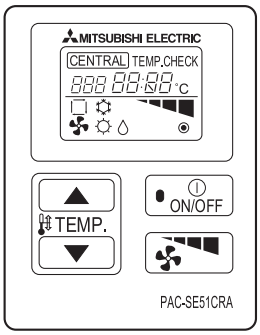

- Control: ON/OFF, room temperature, fan speed.
- The only wiring required is cross-over wiring based on two-wire signal lines.
- Room temperature sensors are built-in.
- Ability to limit the set temperature by AG-150A/ GB-50A
  (upper and lower temperature can be set)
- Can operate all types of indoor units

  ※: Since this controller has limited functions, it should always be used in conjunction with standard controller or centralized controller

■ Functions

□:Each unit ○:Each group ●:Each block
△:Each floor ◎:Collective ×:Not available

Item	Description	Operations	Display
ON/OFF	ON and OFF operation for a single group	○	○
Operation mode switching	Switches between Cool / Dry / Auto / Fan / Heat. Operation modes vary depending on the air conditioner unit. Auto mode is the City Multi R2 and WR2 series only.	×	○
Temperature setting	Sets the temperature for a single group Range of temperature setting Cool/Dry : 19˚C - 30˚C (14˚C - 30˚C) Heat : 17˚C - 28˚C (17˚C - 28˚C) Auto : 19˚C - 28˚C (17˚C - 28˚C)	○	○
Fan speed setting	Models with 4 air flow speed settings: Hi/Mid-2/Mid-1/Low Models with 3 air flow speed setting: Hi/Mid/Low Models with 2 air flow speed settings: Hi/Low Fan speed setting varies depending on the model.	○	○
Air flow direction setting	Air flow direction angles (4-angle, Swing) Louver ON/OFF Air flow direction settings vary depending on the model.	×	×
Timer operation	Not available	×	×
Permit / Prohibit local operation	Individually prohibit operation of each local remote control function (ON/OFF, Set temperature). ※1: When the local remote controller inactivation command is received from the master system controller, "CENTRAL" is displayed.	×	※1 ○
Indoor unit intake temperature	Measures the intake temperature of the indoor unit only when the indoor unit is operating.	×	×
Error	When an error is currently occurring on an air conditioner unit, the afflicted unit and the error code are displayed.	×	□
Test run	This operates air conditioner units in test run mode. ※2: The display for test run mode will be the same as for normal start/stop (no display "test run").	×	※2 ○
Ventilation equipment	Up to 16 indoor units can be connected to an interlocked system that has one LOSSNAY.	○	×
Function to limit the setting range of room temperature (Set temperature range limit)	The range of room temperature setting can be limited by the initial setting. The lowest limit temperature can be made higher than the usual (19˚C) at cooling/drying, while the upper limit temperature lower than the usual (28˚C) at heating. ※ This function is available only when applying together with TG-2000A and G-50A.	×	○

■ System example

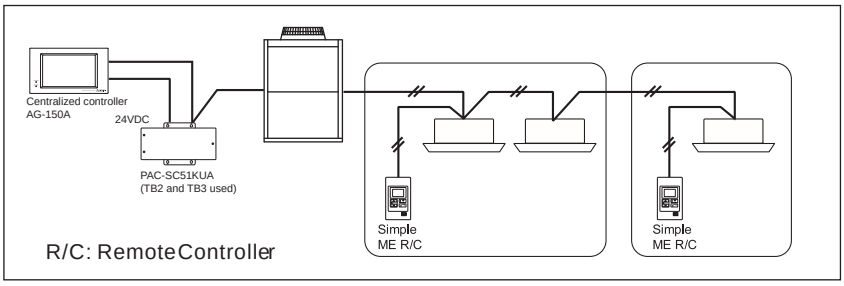

■ External dimension

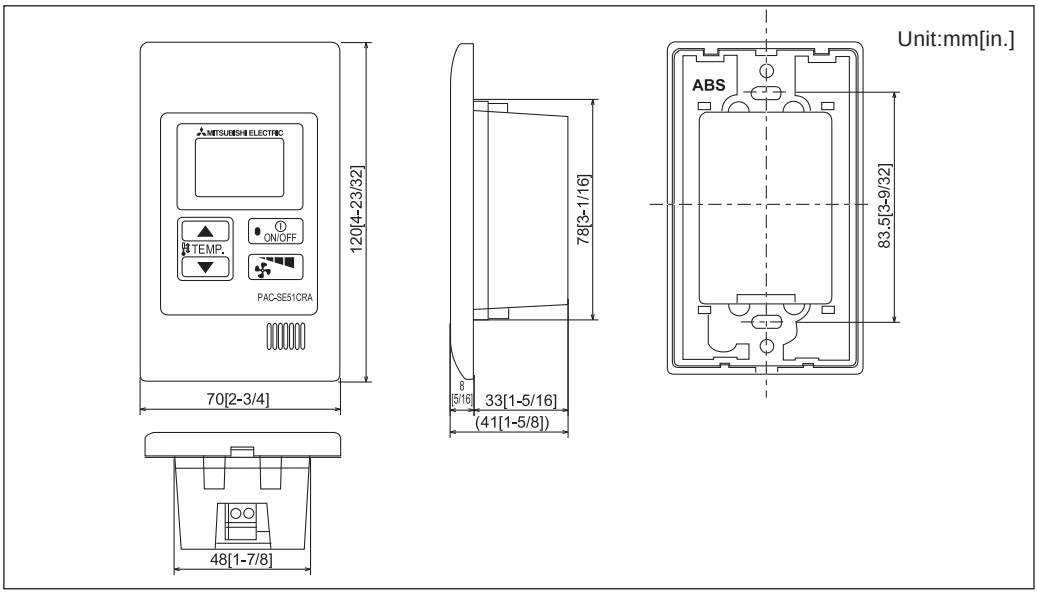

Controller

2-5. Wireless remote controller [PAR-FL32MA / PAR-FA32MA]

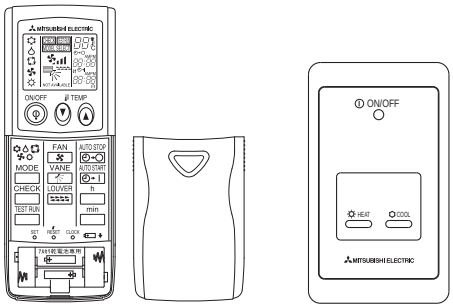

PAR-FL32MA

PAR-FA32MA
(Signal receiving unit)

- It can operate in a group system without requiring address settings.
- When operating, it displays LED lamps. When errors occur, the error code can be shown by the LED flash count.

※: If an indoor unit with different functionality is operating inside the same group, please note there may be cases when functionality is partially disabled for batch control.

※: Wireless remote controllers can only be used for a single refrigerant system.

※: If you use a system controller to centrally control a group, you will need cross-wiring between indoor units when using a wireless remote controller.
Also ensure there is no difference between the group setting of the main system controller and the cross wiring across indoor units when wiring and setting cross wires.

■ Functions

□:Each unit ○:Each group ●:Each block
△:Each floor ◎:Collective ×:Not available

Item	Description	Operations	Display
ON/OFF	ON and OFF operation for a single group	○	○
Operation mode switching	Switches between Cool / Dry / Fan / Heat / Auto.* Operation modes vary depending on the air conditioner unit. *Auto only supported for the City Multi R2 and WR2 series.	○	○
Temperature setting	Sets the temperature for a single group Range of temperature setting Cool/Dry : 19°C - 30°C (14°C - 30°C) / 67°F - 87°F (57°F - 87°F) Heat : 17°C - 28°C (17°C - 28°C) / 63°F - 83°F (63°F - 83°F) Auto : 19°C - 28°C (17°C - 28°C) / 67°F - 83°F (63°F - 83°F) ( ) For PEFY/PFFY by setting DipSW 7-1 to ON and limits to NI6H fan speed only. ※ Set to PAR-FL32MA according to its Installation Manual 4 "Model setting".	○	○
Fan speed setting	Models with 4 air flow speed settings: Hi/Mid-2/Mid-1/Low Models with 3 air flow speed settings: Hi/Mid/Low Models with 2 air flow speed settings: Hi/Low Auto setting varies depending on the model.	※	※
Air flow direction setting	Air flow direction angles (4-angle, Swing) Auto Louver ON/OFF. Air flow direction settings vary depending on the model.	※	※
Timer operation	One ON/OFF setting can be set for one day.	○	○
Permit / Prohibit local operation	Individually prohibit operation of each local remote control function (ON/OFF, Change operation mode, Set temperature, Reset filter). ※1: If operation is performed when the local remote controller inactivation command is received from the main system controller, a buzzer will ring and an LED will flash.	×	※1 ○
Indoor unit intake temperature	Measures the intake temperature of the indoor unit when the indoor unit is operating.	×	×
Error	When an error occurs on the air conditioner unit, the operation lamp on the signal receiving unit will flash.	×	○
Test run	This operates air conditioner units in test run mode.	○	○
Ventilation equipment	Up to 16 indoor units can be connected to an interlocked system that has one LOSSNAY.	×	×

※ Some models will have different display for the air flowdirection and fan speed.
Set the air flow direction and fan speed when performing initial setting.

■ System example

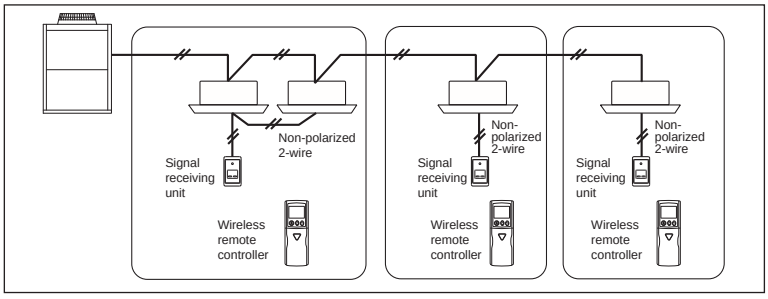

■ External dimension

Unit:mm[in.]

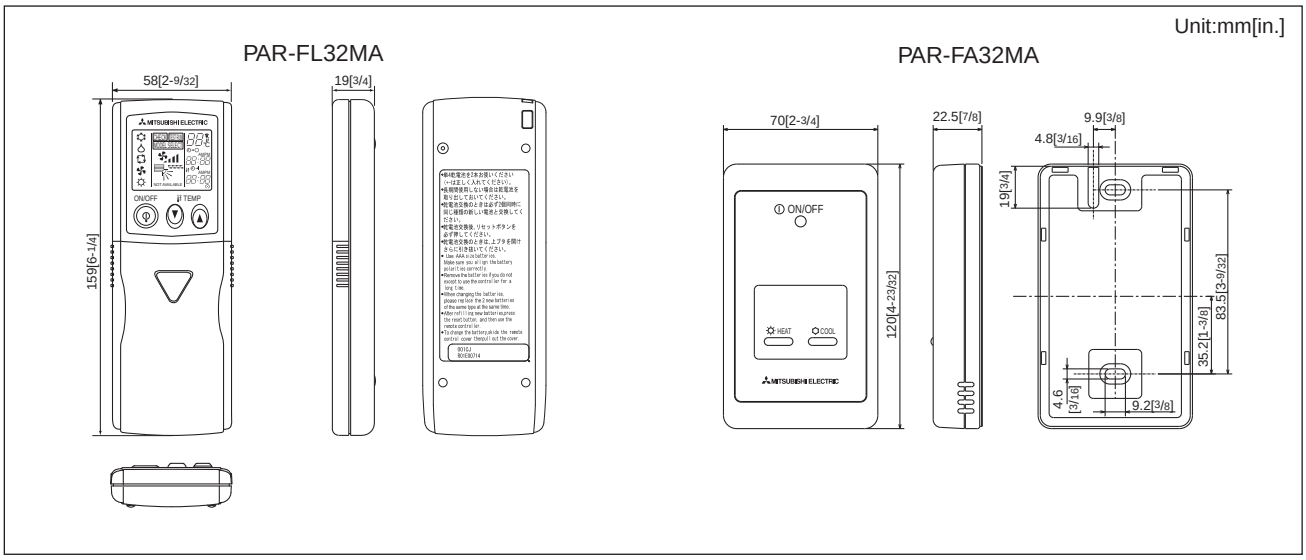

2-6. LOSSNAY remote controller [PZ-52SF]

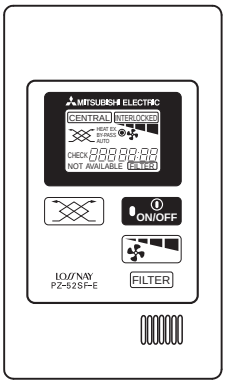

- Stand-alone LOSSNAY operation is possible by commands from a centralized controller or LOSSNAY remote controller. (AG-150A/GB-50A are centralized controllers that support LOSSNAY operation.)
- The LOSSNAY remote controller is capable of changing the air flow and vent modes.
- All the wiring is cross-wiring that uses non-polar two wire system signal cables.

❊ : When setting up a LOSSNAY stand-alone system or when setting up a LOSSNAY and centralized controller system, connect a power supply unit for the signal cables.
❊ : It is impossible to use a LOSSNAY remote controller for LOSSNAY unit that is interlocked with other indoor units (except for some models).
❊ :This product is in short supply.

■ Functions

□:Each unit ○:Each group ●:Each block
△:Each floor ◎:Collective ×:Not available

Item	Description	Operations	Display
ON/OFF	ON and OFF operation for a LOSSNAY unit	○	○
Operation mode switching	Switches between automatic ventilation/ vent - heat interchange/ normal ventilation Note: Operation modes vary depending on the model. When connecting to only models without a damper, these models cannot be used.("NOT AVAILABLE" will appear in the display.)	○	○
Temperature setting	Not available	×	×
Fan speed setting	Models with 2 air flow speed settings: Hi/Low When only connected to single notch models, this function is disabled.	○	○
Air flow direction setting	Not available	×	×
Timer operation	Not available	×	×
Permit / Prohibit local operation	Individually prohibit operation of each local remote control function (ON/OFF, Reset filter). ❊1: When the local remote controller inactivation command is received from a main system controller, " CENTRAL " is displayed.	×	❊1 ○
Indoor unit intake temperature	Not available	×	×
Error	When an error occurs on the air conditioner unit, the operation lamp on the signal receiving unit will flash.	×	□
Test run	There is no test run switch for LOSSNAY remote controllers. Set test run on a LOSSNAY by using the test run switch on the LOSSNAY unit. ❊2: Cancel by operating the ON/OFF switch after switching off the LOSSNAY unit test run switch.	❊2 ×	○
Ventilation equipment	Up to 16 indoor units can be connected to an interlocked system that has one LOSSNAY.	○	○
Interlocked operation	Indicates it is being operated by an operation control unit's external control terminal for an interlocked system that contains LOSSNAY units and indoor units.	×	○

■ System example

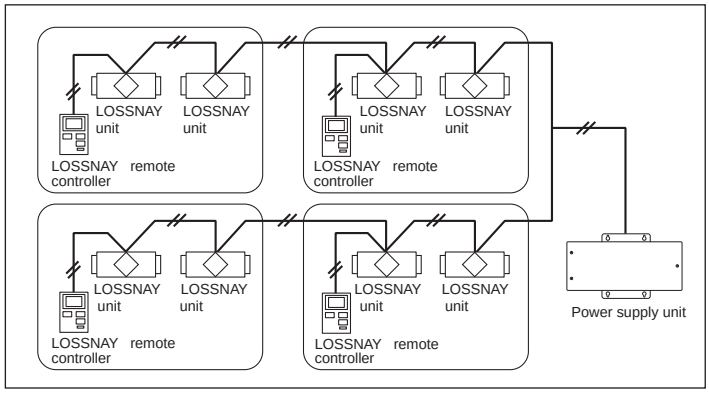

■ External dimension

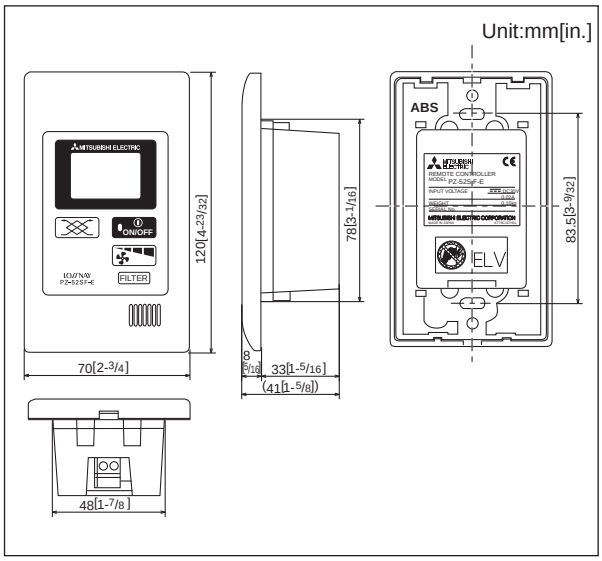

2-7. LOSSNAY remote controller for LGH-RX5-E60 [PZ-60DR-E]

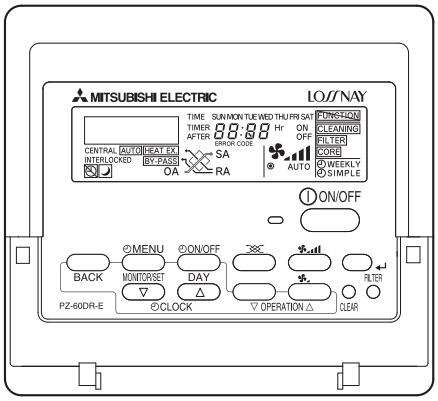

- Stand-alone LOSSNAY operation is possible by commands from a centralized controller or LOSSNAY remote controller. (AG-150A/GB-50A are centralized controllers that support LOSSNAY operation.)

- The LOSSNAY remote controller is capable of changing the air flow and vent modes.
- All the wiring is cross-wiring that uses non-polar two wire system signal cables.

※ : When setting up a LOSSNAY stand-alone system or when setting up a LOSSNAY and centralized controller system, connect a power supply unit for the signal cables.
※ : It is possible to use a LOSSNAY remote controller for LOSSNAY unit that is interlocked with other indoor units.
※ : It is not possible to connect to LGH-RX4-E.

■ Functions (in case of LGH-RX5-E)

Function(Communicating mode)
New Function
Extra low fan speed (Except LGH-150RX5 and 200RX5)
Weekly timer
Simple timer
Night Purge mode
Multi languages display
24-hours ventilation (Except LGH-150RX5 and 200RX5)
Operation function limit
Clock display
Contact number setting for error situation
LOSSNAY core cleaning sign
Air volume display by external signal
Bypass display by external signal
Possible setting from the controller in addition to unit Dip-SW setting
Extra High / High switch setting
Multi Ventilation mode
Power supply / exhaust when operation starts
Pulse input
Inter locking mode
Automatic recovery following power supply interruption
Delay operation at heating or cooling start-up
Operation output monitor
Exhaust fan stop at outdoor air lower than -15°C
Exhaust fan stop during defrosting,exhaust fan Low speed operation at outdoor air lower than -15°C
Bypass automatic ventilation priority setting
Filter cleaning sign
Maintenance display
Total operated hours
Total LOSSNAY mode operated hours
Error history
Carry on function
In the use of MELANS M-NET
2 controllers display
"Central" indication(use prohibition)

■ System example

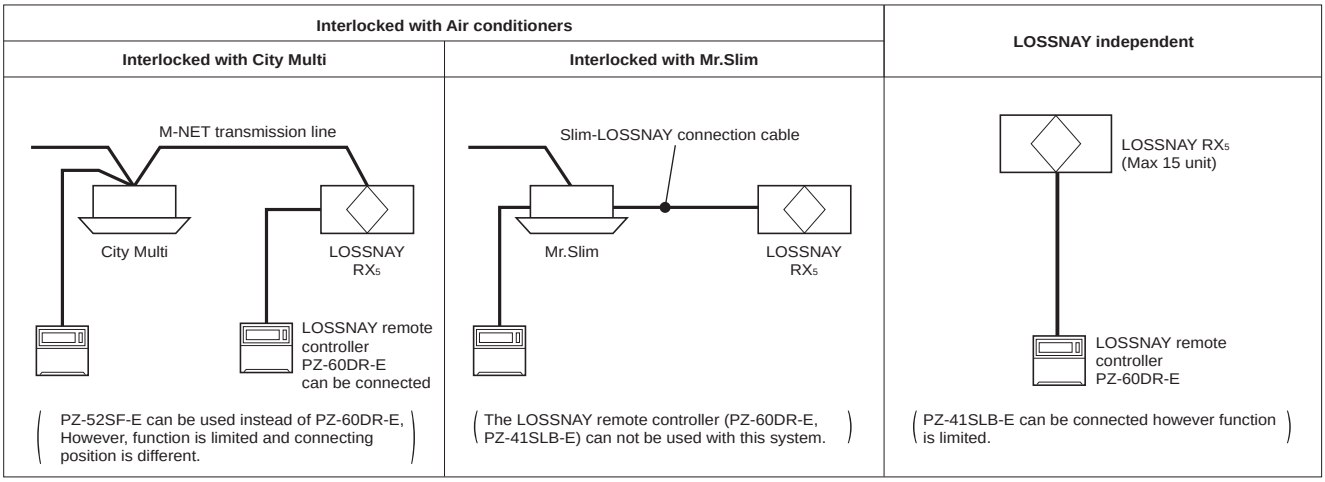

■ External dimension

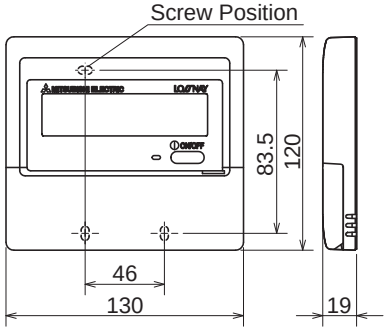

3-1. Group remote controller [PAC-SC30GRA]

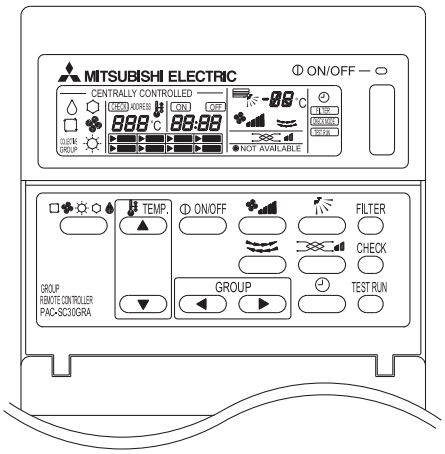

- Up to 8 groups can be operated (maximum of 16 units). Just by pressing switches, groups can be started and stopped individually, or all groups can be started and stopped as a batch.
- Detailed settings and operations can also be made for each individual group.
- All the wiring is simply done with non-polarized two wire signal lines. The connection is the same as the connection to the master system controller.
- It supports operation of groups that can extend beyond one refrigerant system. Furthermore, it is possible to drive interlocked systems that use ventilator equipment or drive ventilator equipment in a stand-alone situation.

  ※: With the group remote controller, you cannot control groups that only contain the LOSSNAY remote controller.
  ※: It is impossible to use the group remote controller to control K control units.
  ※: When connecting to signal cables for central control, it must use a power supply unit for the signal cables.

■ Functions

□:Each unit ○:Each group ●:Each block
△:Each floor ◎:Collective ×:Not available

Item	Description	Operations	Display
ON/OFF	ON and OFF operation for the air conditioner units ※1: Even when only a single indoor unit connected to the group remote controller is operated, the collective ON/OFF lamp will light up.	○◎	※1 ○◎
Operation mode switching	Switches between Cool / Dry / Auto / Fan / Heat. ※2: When collective operation is set, the display will show "COLLECTIVE" in the bottom left of the LCD screen. Operation modes vary depending on the air conditioner unit. Auto mode is the City Multi R2 and WR2 series only.	○◎	※2 ○
Temperature setting	Sets the temperature for a single group Range of temperature setting Cool/Dry : 19˚C - 30˚C (14˚C - 30˚C) Heat : 17˚C - 28˚C (17˚C - 28˚C) Auto : 19˚C - 28˚C (17˚C - 28˚C) ※3: When collective operation is set, the display will show "COLLECTIVE" in the bottom left of the LCD screen.	○◎	※3 ○
Fan speed setting	Models with 5 air flow speed settings: Hi/Mid-2/Mid-1/Low, Auto Models with 4 air flow speed settings: Hi/Mid/Low, Auto Models with 2 air flow speed settings: Hi/Low Fan speed settings vary depending on the model. ※4: When collective operation is set, the display will show "COLLECTIVE" in the bottom left of the LCD screen.	○◎	※4 ○
Air flow direction setting	Air flow direction angles (4-angle or 5-angle, Swing) Auto Louver ON/OFF Air flow direction settings vary depending on the model. ※5: When collective operation is set, the display will show "COLLECTIVE" in the bottom left of the LCD screen.	○◎	※5 ○
Timer operation	It is impossible to set schedules by only using this group remote controller.	×	×
Permit / Prohibit local operation	Individually prohibit operation of each local remote control function (ON/OFF, Change operation mode, Set temperature, Reset filter). ※6: When the local remote controller inactivation command is received from a master system controller, "- CENTRALLY CONTROLLED -" is displayed.	×	※6 ○
Indoor unit intake temperature	Measures the intake temperature of the indoor unit only when the indoor unit is operating.	×	○
Error	When an error is currently occurring on an air conditioner unit, the afflicted unit and the error code are displayed. ※7: This is indicated by the batch operation lamp.	×	※7 □◎
Test run	This operates air conditioner units in test run mode.	○	○
Ventilation equipment	Up to 16 indoor units can be connected to an interlocked system that has one LOSSNAY. LOSSNAY items that can be set are "Hi" "Low" "Stop". Ventilation mode switching is not possible. ※8: When collective operation is set, the display will show "COLLECTIVE" in the bottom left of the LCD screen.	○◎	※8 ○

■ System example

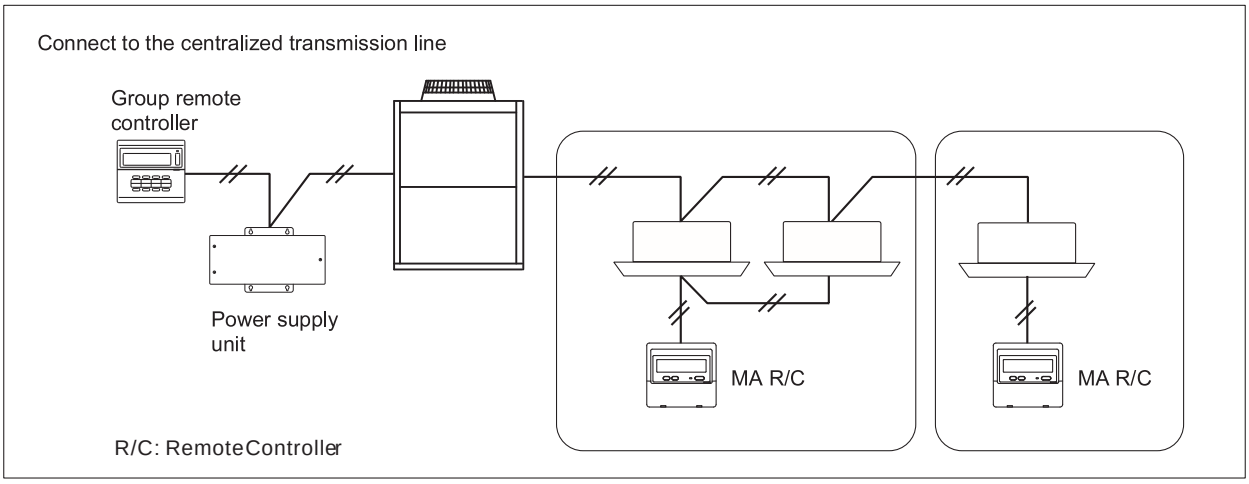

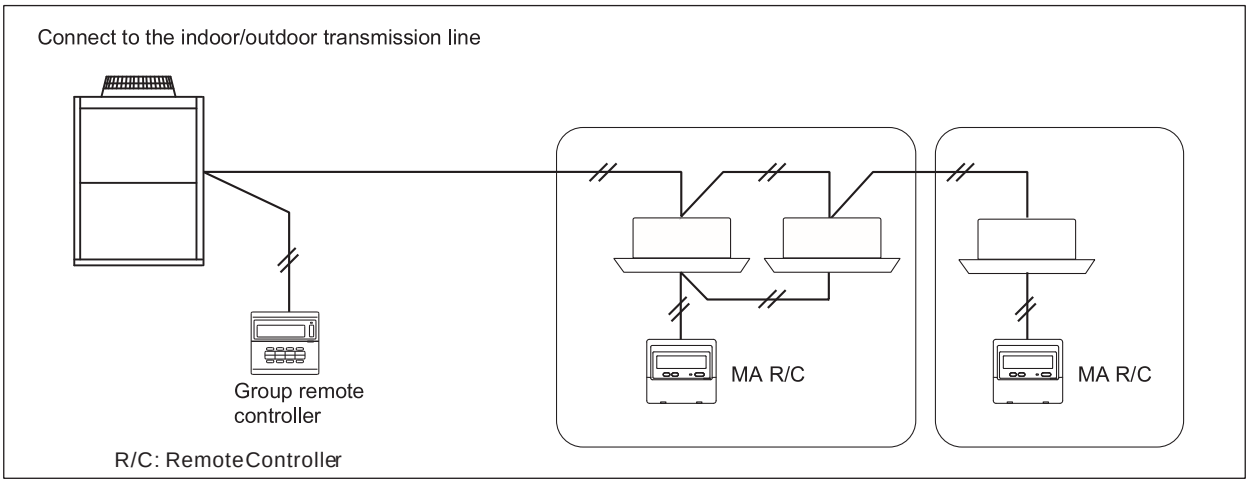

■ External dimension

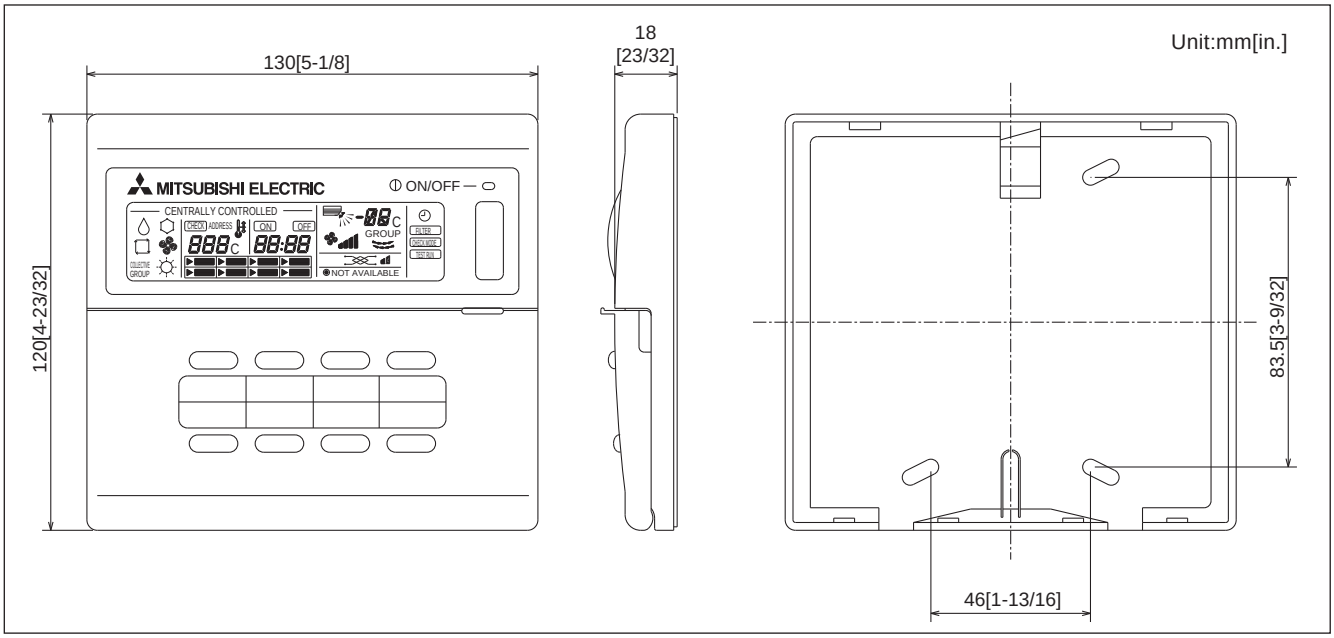

3-2. System remote controller [PAC-SF44SRA]

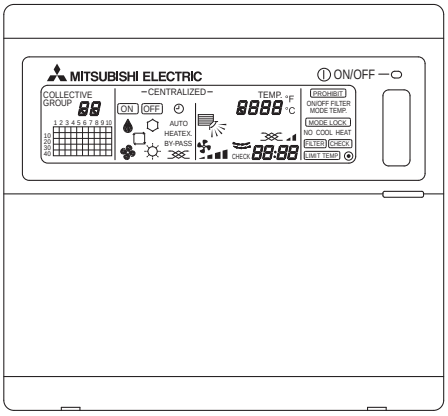

- 50 groups/50 units of air conditioners can be controlled with one remote controller.
- Operation status displayed on easy-to-read LCD
  - ・The group currently operating can be seen at a glance with the operation status display for each.
- Simple remote controller limited to basic operations.
  - ・The only operations required for the air conditioner are "ON/OFF", "Operation mode changeover", "Temperature setting" and "Prohibit operation by local remote controller", so anyone can easily operate the unit.
  - ・Using collective control from the system remote controller, operation mode settings using the local remote controllers can be prohibited. (Operation mode limit function)
- Schedule operation is available
  - ・Groups of air conditioners are available for operation at a set schedule using the Schedule timer (PAC-YT34STA).
- Independent LOSSNAY operation is possible
  - ・LOSSNAY units can be grouped the same as the Central remote controller and ON/OFF remote controller.
  - ・"Automatic ventilation", "Normal ventilation" and "Ventilation with heat exchanger" can be switched from the system controller.

■ Functions

□: Each unit ○: Each group ●: Each block
△: Each floor ◎: Group or collective ×: Not available

Item	Description	Operations	Display
ON/OFF	ON and OFF operation for the air conditioner units ※Even when only a single indoor unit connected to the group remote controller is operated, the collective ON/OFF lamp will light up.	◎	◎
Operation mode switching	Switches between Cool / Dry / Auto / Fan / Heat. Operation modes vary depending on the air conditioner unit. Auto mode is the City Multi R2 and WR2 series only.	◎	○
Temperature setting	The temperature can be set within the following range. Values in parentheses are for the medium-temperature indoor unit. Cool/Dry : 19°C - 30°C (14°C - 30°C) / 67°F - 87°F (57°F - 87°F) Heat : 17°C - 28°C (17°C - 28°C) / 63°F - 83°F (63°F - 83°F) Auto : 19°C - 28°C (17°C - 28°C) / 67°F - 83°F (63°F - 83°F) ( ) For PEFY/PFFY by setting DipSW 7-1 to ON and limits to NI6H fan speed only.	◎	○
Fan speed setting	Models with 4 air flow speed settings: Hi/Mid-2/Mid-1/Low Models with 3 air flow speed settings: Hi/Mid/Low Models with 2 air flow speed settings: Hi/Low Fan speed setting (including Auto) varies depending on the model.	◎	◎
Air flow direction setting	Air flow direction angles 4-angle or 5-angle, Swing, Auto Louver ON/OFF Air flow direction settings vary depending on the model.	◎	◎
Manual operation prohibit/permit (ON/OFF, mode change, setting temperature, filter reset)	When set as the master, the ON/OFF, operation mode, setting temperature and filter sign reset operations using the local remote controllers can be prohibited. ※[PROHIBIT] will appear when prohibited. Only ON/OFF and filter reset can be prohibited for the LOSSNAY group.	◎	◎
Specific mode operation prohibit (Cooling prohibit, heating prohibit, cooling/heating prohibit)	When set as the master, operation of the following modes with the local remote controllers can be prohibited. When cooling is prohibited: Cooling, dry, automatic can not be chosen. When heating is prohibited: Heating, automatic can not be chosen. When cooling/heating is prohibited: Cooling, dry, heating, automatic can not be chosen.	◎	◎
Room temperature display	The room temperature cannot be displayed.	—	×
Error display	The details of the currently occurring error are displayed with the address. ※The address may not be displayed depending on the details of the error.	—	◎
Schedule operation	Every group can be schedule-controlled with the use of schedule timer (PAC-YT34STA).	△	△
Ventilation (independent)	Group operation of only the free plan LOSSNAY is possible. ※The operation mode of these groups is automatic ventilation, ventilation with heat exchanger and normal ventilation.	○	○
Ventilation (interlocked)	The LOSSNAY will run in interlock with the operation of indoor unit. ※The fan rate and mode cannot be changed. The LED will turn ON during operation after interlocking.	△	△
Temperature-set limitation	Batch-setting to temperature range limit at cooling, heating, and auto mode. ※This function cannot be used with the MA remote controller. (It depends on the indoor unit model.)	◎	○
External input (Timer connection, emergency stop input, etc.)	The following can be input with the level signals or pulse signals. Level signal: "Emergency stop input" or "Collective ON/OFF" Pulse signal: "Collective ON/OFF" or "Local remote controller prohibit/permit" One input can be selected from those above.	◎	—
External output (Error output, operation output)	"ON/OFF" and "error/normal" are output with the level signal. ※The optional output cable is required.	—	◎

■ System example

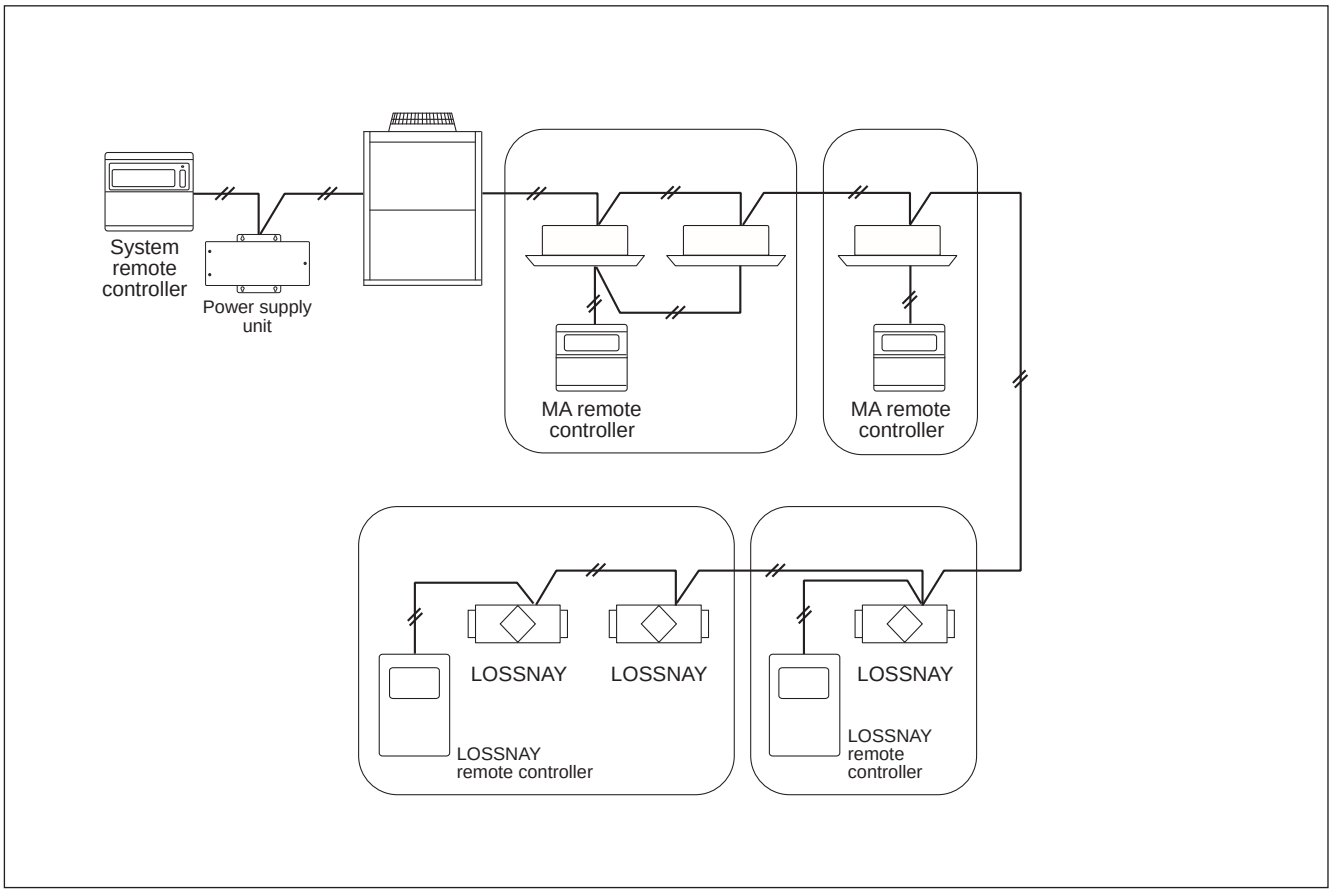

■ External dimension

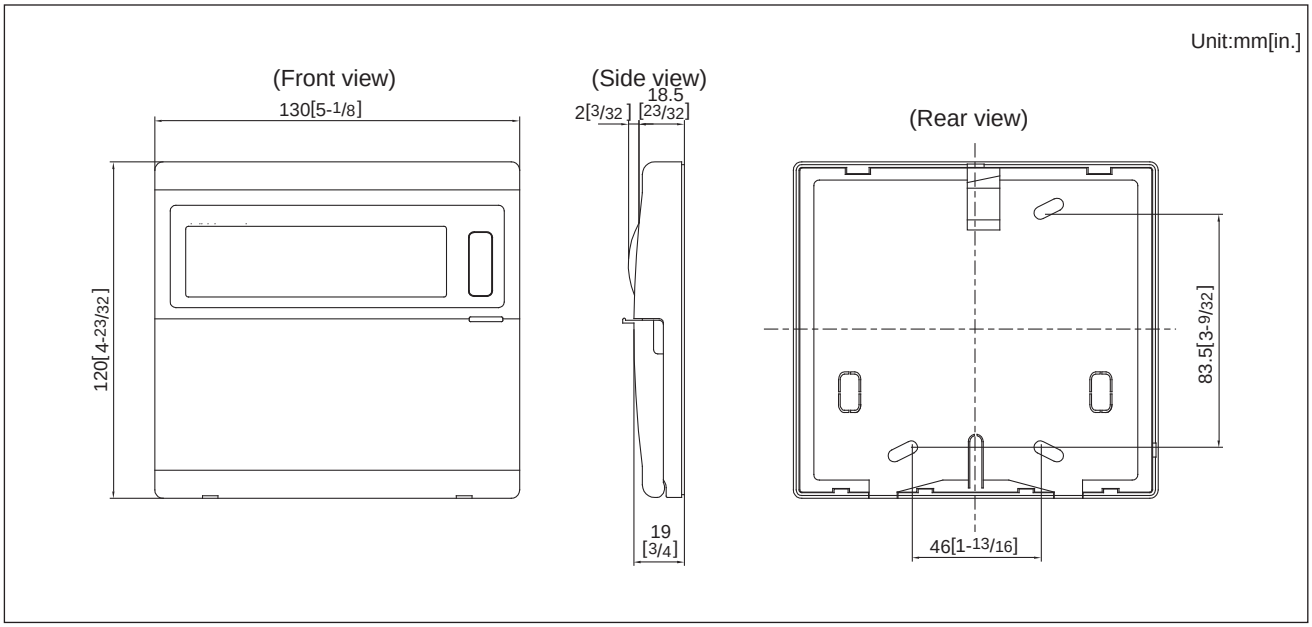

3-3. Schedule timer [PAC-YT34STA]

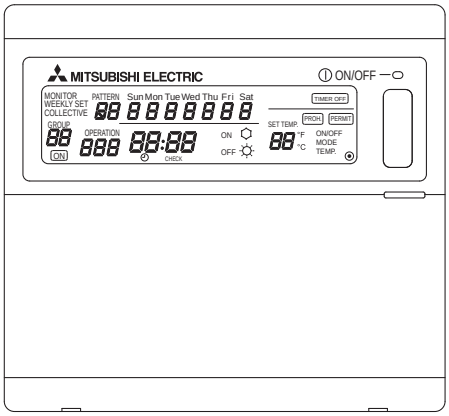

- The weekly schedule of up to 50 groups/50 units can be controlled with one schedule timer.
- The weekly schedule of up to ten patterns (no setting + nine patterns) is available for setting.
- "ON/OFF", "Operation Prohibit", "COOL /HEAT" and "Set Temperature" can be scheduled with up to 16 settings in one pattern.
- It can be connected to the centralized control transmission line or to the indoor/outdoor transmission line without the power supply unit. It is non-polar 2-wire.
- It can be interlocked with a building management system using the external input/output managing function.
- An error unit address and error code appear on the display in case of malfunction happening.

■ Functions

□: Each unit ○: Each group ●: Each block
△: Each floor ◎: Group or collective ×: Not available

Item		Description	Operations	Display
Unit control		50 units/50 groups (Maximum 16 units connected in one group)	◎	○
Schedule control		One week	○	○
Operation	ON/OFF	ON/OFF operations can be carried out collectively or for each group.	○	○
	Timer reset	The timer setting details can be disabled collectively	○	○
Schedule function	Setting details	ON/OFF COOL/HEAT/AUTO Room temperature setting (19℃ to 28℃/67℉ to 83℉) Operation prohibit (ON/OFF, operation mode, setting temperature)	○	—
	Number of settings	Number of setting patterns: Ten (no setting + nine patterns) (Operation for a week can be set by selecting one of ten patterns for each day.) Number of operations: Up to 16 operations can be set in one pattern	○	—
	Time setting unit	The item can be set in five-minute units	○	—
Display		Current time and day	—	○
		Error state	—	○
		Unit operation state	—	×
External input (Timer connection, emergency stop input, etc.)		The following can be input with the level signals or pulse signals. Level signal: "Emergency stop input" or "Collective ON/OFF" Pulse signal: "Collective ON/OFF" or "Local remote controller prohibit/permit" One input can be selected from those above.	◎	—
External output (Error output, operation output)		"ON/OFF" and "error/normal" are output with the level signal. ※ The optional output cable is required.	—	◎

■ System example

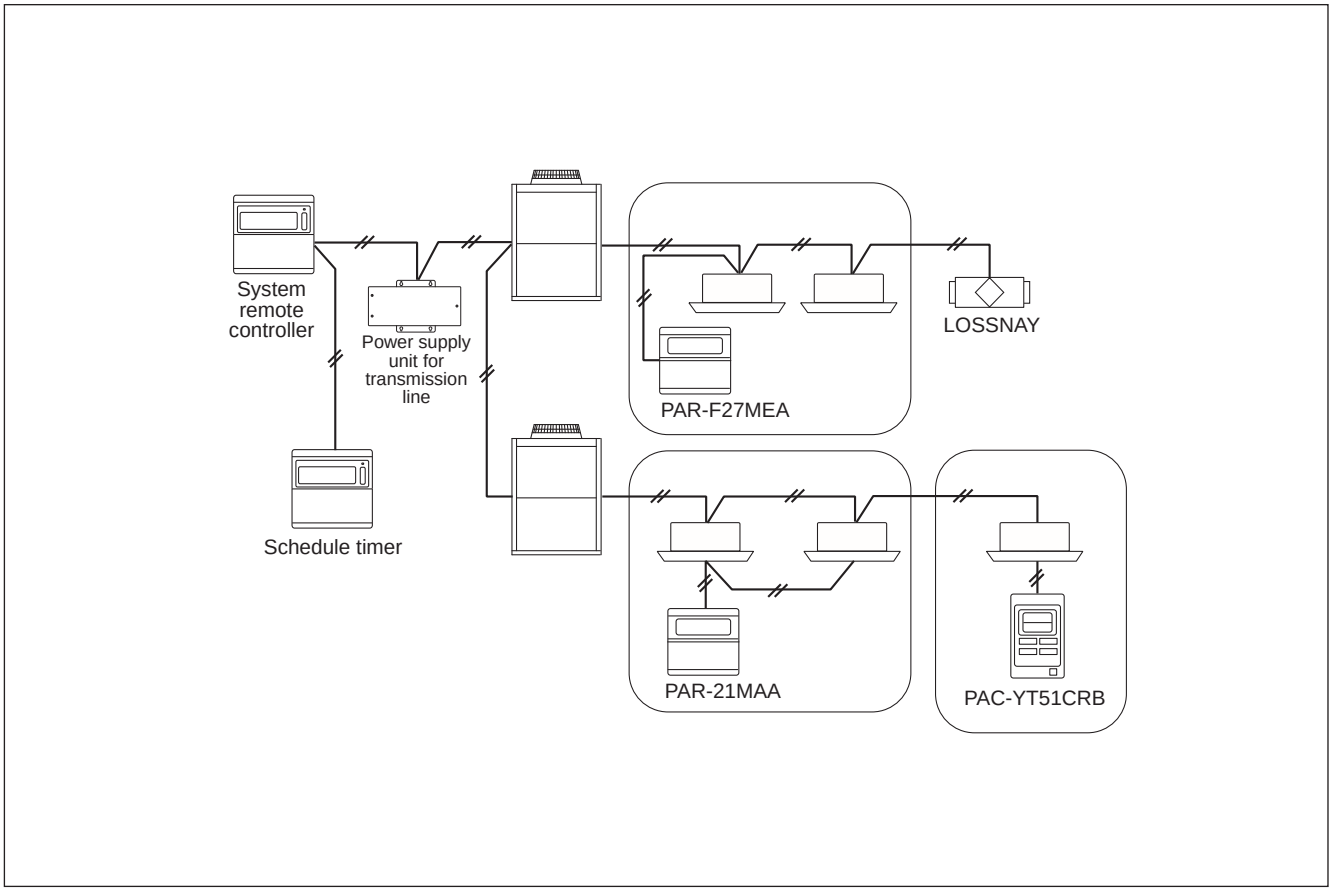

■ External dimension

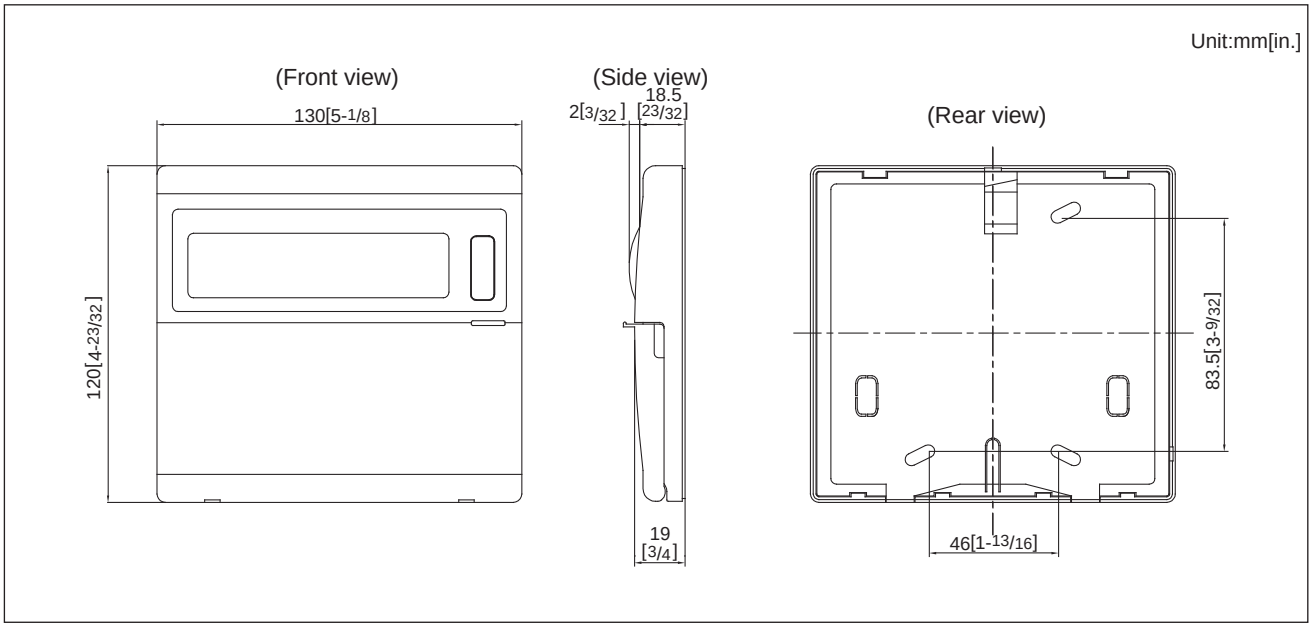

3-4. ON/OFF remote controller [PAC-YT40ANRA]

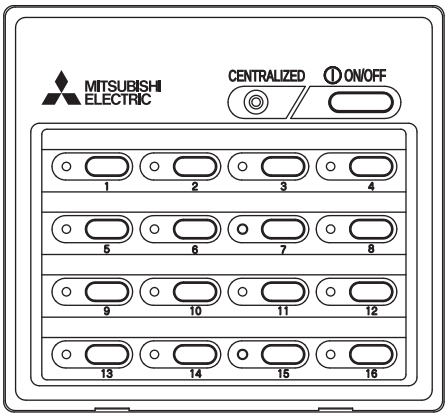

- 16 groups/50 units can be controlled.
  - Up to 16 groups/50 units can be operated with one ON/OFF remote controller.
  - A general-purpose interface is available for control, so general devices can also be turned ON and OFF.
- Just press a switch to start.
  - All of the units can be started and stopped by pressing the main switch, and each unit in the group can be started and stopped with individual switches.
- LED flashing during failure.
  - If any error should occur in the air conditioner, its details can be confirmed easily with the flashing LED. The LED also indicates whether each group is running or stopped.
- Interlock operation with external system possible.
  - It can be flexibly interlocked with a card reader, fire alarm system or building management system, etc., using the incorporated external input/output function.
- Flexible group setting.
  - The groups can be easily configured, so the group pattern can be freely set according to the layout.
  - The ON/OFF remote controller can be connected at the indoor/outdoor transmission line without the power supply unit.

■ Functions

□: Each unit ○: Each group ●: Each block
△: Each floor ◎: Group or collective ×: Not available

Item	Description	Operations	Display
ON/OFF	ON and OFF operation for the air conditioner units	◎	◎
Operation mode switching	Not available	×	×
Temperature setting	Not available	×	×
Fan speed setting	Not available	×	×
Air flow direction setting	Not available	×	×
Manual operation prohibit/permit (ON/OFF, operation mode, setting temperature, filter reset)	Compatible only with external input.	×	×
Specific mode operation prohibit (Cooling prohibit, heating prohibit, cooling/heating prohibit)	Not available	×	×
Room temperature display	Not available	—	×
Error display	LED flashes during failure. (The error code can be confirmed by removing the cover.)	—	△
Schedule operation	Not available	×	×
Ventilation operation (independent)	Group operation of only LOSSNAY units possible. ※ Only ON/OFF of group.	○	○
Ventilation operation (interlocked)	The LOSSNAY will run in interlock with the operation of indoor unit. ※ The fan rate and mode cannot be changed. The LED will turn ON only during operation after interlocking.	△	△
External input (Timer connection, emergency stop input, etc.)	The following can be input with the level signals or pulse signals. Level signal: "Emergency stop input" or "Collective ON/OFF" Pulse signal: "Collective ON/OFF" or "Local remote controller prohibit/permit" One input can be selected from those above.	◎	—
External output (Error output, operation output)	"ON/OFF" and "error/normal" are output with the level signal. ※ The optional output cable is required.	—	◎

■ System example

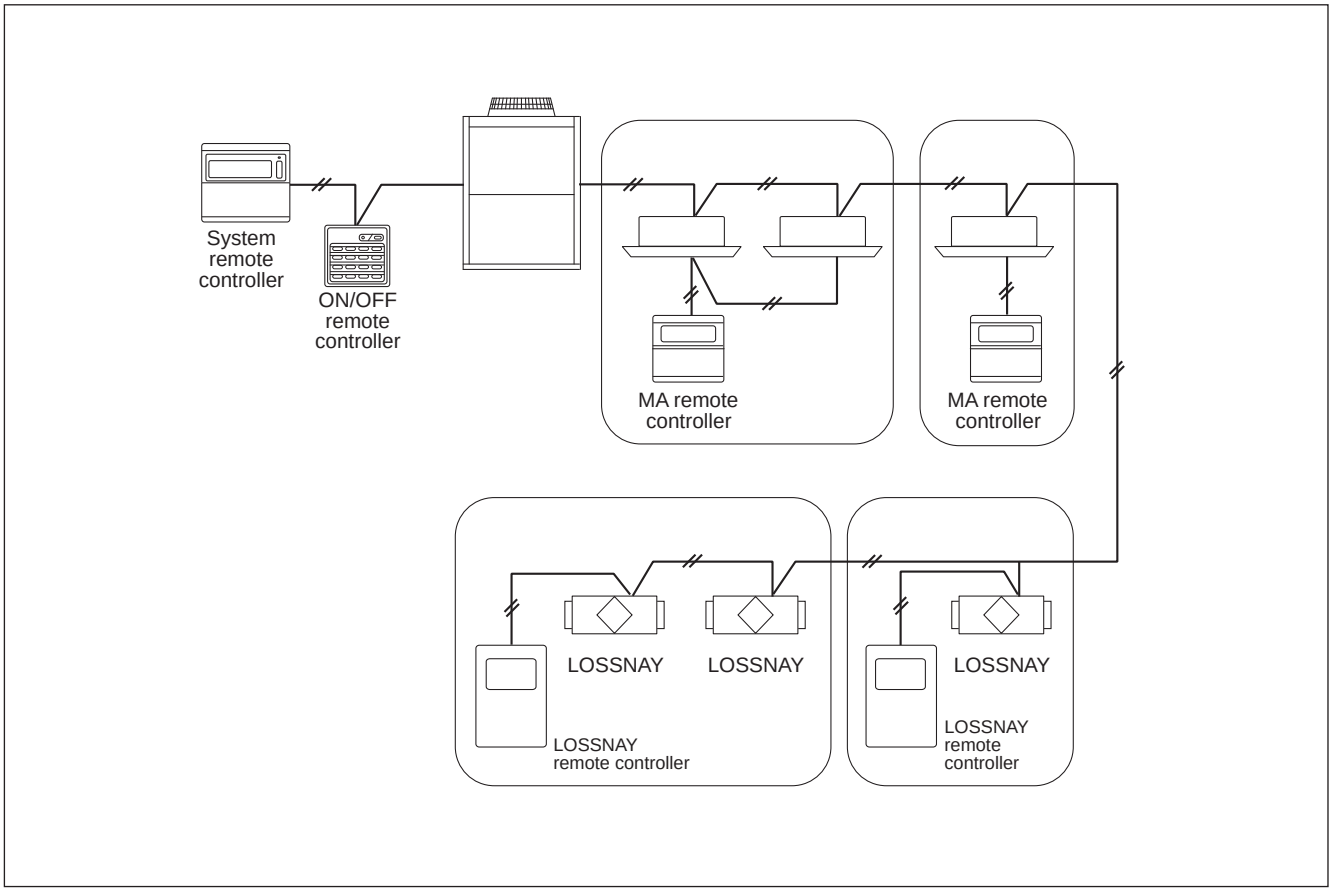

■ External dimension

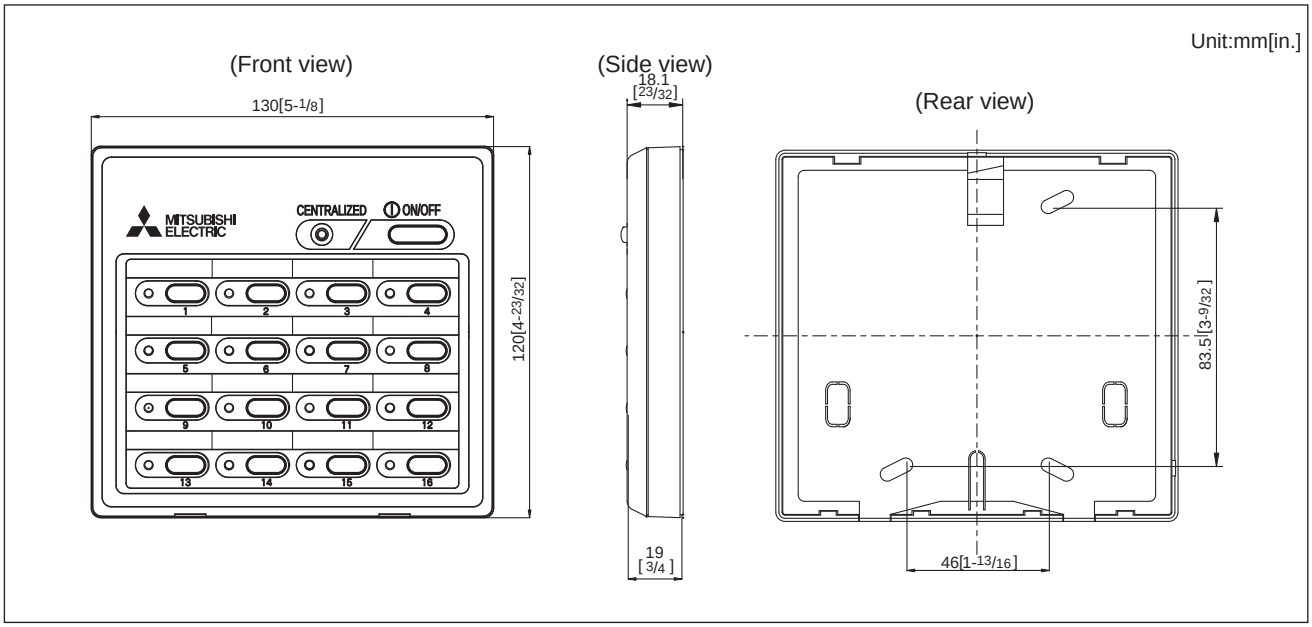

3-5. Centralized controller [AG-150A]

A. The centralized controller of AG-150A combines Web function (optional), which enable the air conditioner system management on a PC browser screen. *1
The management even carried out at a long distance place via public telephone line or internet.

*1 Microsoft® Internet explorer Ver. 6 or later by Microsoft Corporation is needed.
(Note: You must have "Sun Microsystems® Java®". Use the version that is compatible with the operating system in use.)
Microsoft® Internet explorer is a registered trade mark of Microsoft Corporation US in the USA and other countries.
Sun Microsystems® and Java® are trademarks or registered trademarks of Sun Microsystems Inc. in the United States and/or other countries.

Note: Connect AG-150A to a private network.
Use a security device such as a VPN router when connecting the AG-150A to the Internet to prevent unauthorized access.

B. Together with integrated centralized control software TG-2000A, and/or PI, DIDO controller, many optional functions like "Charging", "Peak-cut", "Energy saving", "General equipment management", "Scheduling" etc, can be carried out. Details, please refer to sections of TG-2000A and/or PI, DIDO controller, PLC software.
*AG-150A connected with PAC-YG50ECA cannot be connected to the PLC (PAC-YG21CDA).

C. One AG-150A can control maximum 50 units (including LOSSNAY). Up to 150 units (including LOSSNAY) can be controlled from one AG-150A connected with three expansion controllers.
The integrated centralized control software TG-2000A can manage maximum 2000 units (including LOSSNAY). For details, refer to TG-2000A page.

D. Taking advantage of AG-150A's Web functions, alarming E-mail containing address and error code can be sent to appointed E-mail address upon any fault happen at the air conditioner system.
This could release standby personnel and save operation cost.

E. AG-150A features a 9"-wide color LCD touch panel.
The settings for air conditioning units can be changed by touching the corresponding icons on the display.

F. The interlock-control option enables interlocked operations of air conditioning unit groups and the general equipment groups, based on the changes of status in the ON/OFF, Mode, or Error signals.(Can be set from the Web browser only)

■ Functions

□:Each unit ○:Each group ●:Each block
△:Each floor ◎:Collective ×:Not available

Item	Description	Operations	Display
ON/OFF	ON and OFF operation for the air conditioner units	○◎△●	○◎
Operation mode switching	Switches between Cool / Dry / Auto / Fan / Heat. (Group of LOSSNAY unit : automatic ventilation/ vent - heat interchange/ normal ventilation) Operation modes vary depending on the air conditioner unit. Auto mode is the City Multi R2 and WR2 series only.	○◎△●	○
Temperature setting	Range of temperature setting Cool/Dry : 19°C - 30°C (14°C - 30°C) / 67°F - 87°F (57°F - 87°F) Heat : 17°C - 28°C (17°C - 28°C) / 63°F - 83°F (63°F - 83°F) Auto : 19°C - 28°C (17°C - 28°C) / 67°F - 83°F (63°F - 83°F) ※ Range of temperature settings vary depending on model.	○◎△●	○
Sliding Temperature setting	This function shifts the preset temperature by the preset increment to reduce the temperature difference between the indoor and outdoor air temperatures during cooling operation. The maximum shifting temperature (+1°C, +2°C, +3°C, +4°C) can be set for each group.	○	○
Night setback setting	This function helps keep the indoor temperature in the temperature range while the units are stopped and during the time this function is effective.	○	○
Fan speed setting	Models with 5 air flow speed settings: Hi/Mid-2/Mid-1/Low, Auto Models with 4 air flow speed settings: Hi/Mid/Low, Auto Models with 2 air flow speed settings: Hi/Low Fan speed setting (including Auto) varies depending on the model.	○◎△●	○
Air flow direction setting	Air flow direction angles, 4-angle or 5-angle Swing, Auto ※1: Louver cannot be set. ※Air flow direction settings vary depending on the model.	※1 ○◎△●	○
Schedule operation	Weekly schedule can be set for each group of air conditioning units. Optimal startup setting is also available. ※2 By registering a license for AG-150A, weekly (2 types), annual, and current day scheduling function become available. The system follows either the current day, annual schedule, or weekly, which are in the descending order of overriding priority. Twenty-four events can be scheduled per day, including ON/OFF, Mode, Temperature Setting, Operation Prohibition, Vane Direction, and Fan Speed. Two types of weekly schedule (Summer/Winter) can be set. Settable items depend on the functions that a given air conditioning unit supports.	※2 ○◎△●	○
Permit / Prohibit local operation	Individually prohibit operation of each local remote control function (ON/OFF, Change operation mode, Set temperature, Reset filter). ※3: When the local remote controller inactivation command is received from the master system controller, "Disabled"appears in inverted display on the operation setting screen.	○◎△●	※3 ○
Indoor unit intake temperature	Measures the intake temperature of the indoor unit only when the indoor unit is operating.	×	○
Error	When an error is currently occurring on an air conditioner unit, the afflicted unit and the error code are displayed. ※4: When an error occurs, the "ON/OFF" LED flashes. The operation monitor screen shows the abnormal unit by flashing it. The error monitor screen shows the abnormal unit address, error code and source of detection. The error log monitor screen shows the time and date, the abnormal unit address, error code and source of detection.	×	※4 □◎
Test run	This operates air conditioner units in test run mode.	○◎△●	○
Ventilation equipment	The interlocked system settings can be performed by the master system controller. When setting the interlocked system, you can use the ventilation switch to switch the free plan LOSSNAY settings between "Hi", "Low" and "Stop". When setting a group of only free plan LOSSNAY units, you can switch between "Normal ventilation", "Interchange ventilation" and "Automatic ventilation". *5 When setting ventilation interlock with Mr.Slim units, the air conditioning and interlocked ventilation icon will display ON even when the interlocked LOSSNAY is operating by itself. (This will occur when used with the following M-NET adapter: PAC-SF48/50/60/70/80/81MA-E)	○◎△●	※5 ○
External input/output	By using accessory cables you can set and monitor the following. Input: By level signal: "Batch ON/OFF", "Batch emergency stop" By pulse signal: "Batch ON/OFF", "Enable/disable local remote controller" Output: "ON/OFF", "Error/Normal" ※6: Requires an external I/O cable (PAC-YG10HA; sold separately) and a commercially available external power supply.	※6 ◎	※6 ◎

NOTE: Depending on the versions of AG-150A, some of the functions may not be available.
The external input/output terminal on AG-150A becomes unavailable when AG-150A is connected to PAC-YG50ECA. Use the terminals on PAC-YG50ECA in that case.

■ External dimension

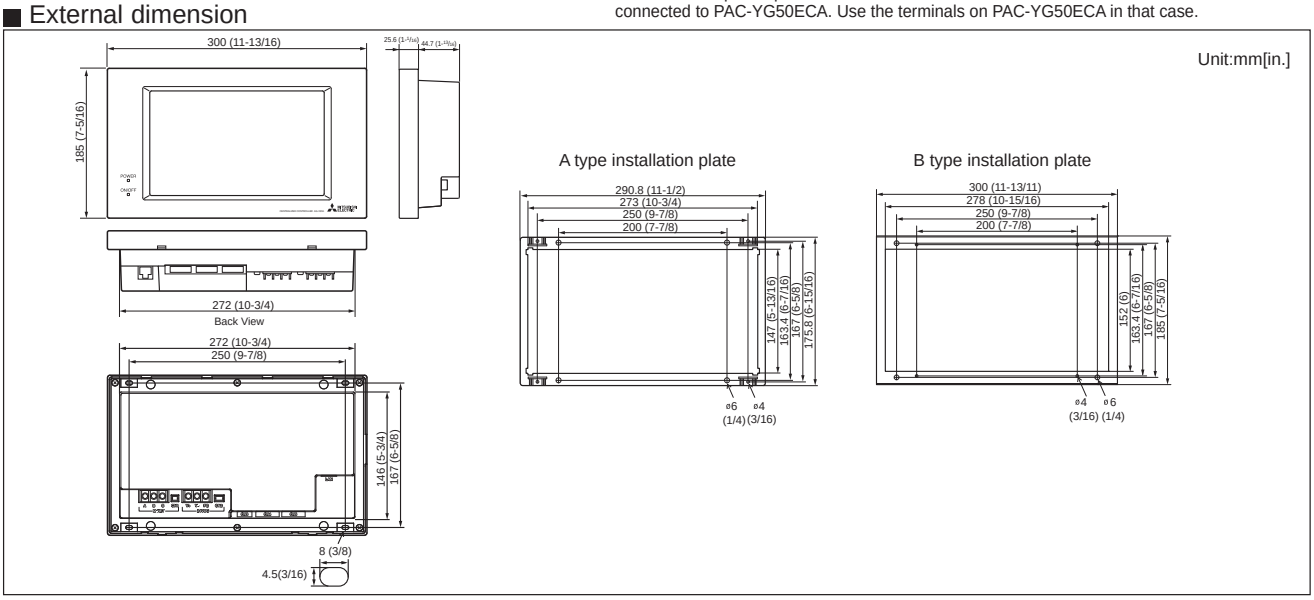

1. Power supply to AG-150A

AG-150A needs DC power supply of 24V and M-NET (24~32V); the former is for centralized control transmission use and the latter is for AG-150A's operating and LAN function use.

(1). Power supply unit PAC-SC51KUA is the recommended power supplier for AG-150A. The basic scheme is as follows. For details, please refer to Power supply unit PAC-SC51KUA.

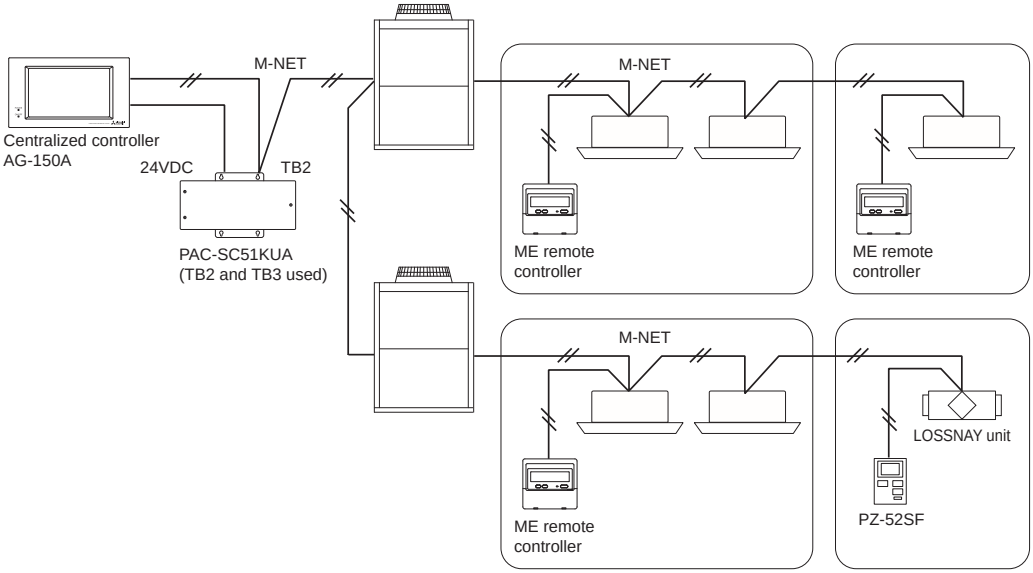

Fig. 1 AG-150A and PAC-SC51KUA basic scheme.

NOTE : For AG-150A connected with the expansion controller, refer to the section "3-8. Expansion controller."

2. External input/output usage

NOTE : When using the AG-150A connected with the expansion controller, use external input/output function of the expansion controller.

(1). External signal input function

※To use the external signal input, an external I/O adapter (PAC-YG10HA; sold separately) and an external power supply are required.

1). External input

Emergency stop/normal, ON/OFF and prohibit/permit of local remote controller operation can be controlled for all air conditioners being controlled by using a voltage (12VDC or 24VDC) contact signal from an external source.
(Select with the function select setting.)

No	Function name	External signal input function	Remarks
1	Not in use	Do not use external input signal (factory setting)	――――――――――――――
2	Emergency stop (Level signal)	Execute emergency stop/normal with level signal	The local remote controller ON/OFF operations, and the controller ON/OFF operation and prohibit/permit change operations will be prohibited during emergency stop. Timer operation will also be prohibited.
3	ON/OFF (Level signal)	Perform ON/OFF with level signal	The local remote controller ON/OFF operations, and the controller ON/OFF operations and prohibit/permit change operations will be prohibited. Timer operation will also be prohibited.
4	ON/OFF prohibit/permit (Pulse signal)	Perform ON/OFF, prohibit/permit with pulse signals.	Set the pulse width while the contact is ON to 0.5 to 1 sec.

2). Level signal and pulse signal (12VDC or 24VDC)

(A) Level signal

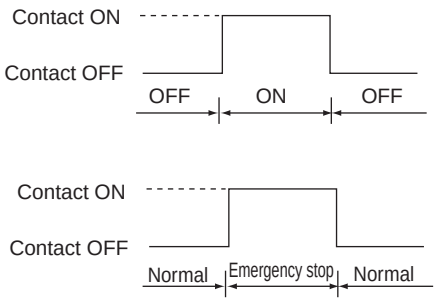

(B) Pulse signal
(Example) for ON/OFF

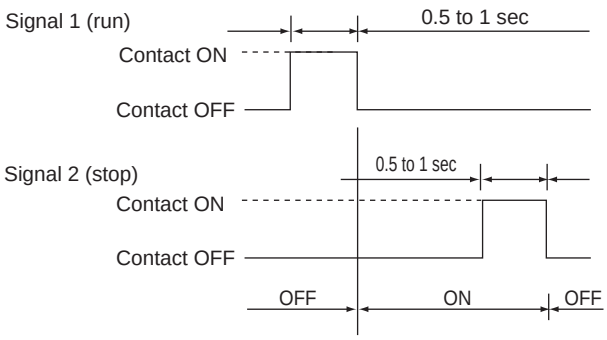

*The prohibit/permit input is the same.

3). External input specifications

CN5	Lead wire	Emergency stop/normal level signal	ON/OFF, level signal	ON/OFF, prohibit/enable pulse signal
No.5	Orange	Emergency stop/normal input	ON/OFF input	ON input
No.6	Yellow	Not used	Not used	OFF input
No.7	Blue	Not used	Not used	Local remote controller operation prohibit input
No.8	Gray	Not used	Not used	Local remote controller operation enable input
No.9	Red	External DC source “+ 12VDC” or “+ 24VDC”		

(A) For level signal

① When the emergency stop/normal signal is selected, the status will change from normal to emergency stop when the external input signal contact changes from OFF to ON, and will change from emergency stop to normal when the contact changes from ON to OFF. Air conditioning units that came to an emergency stop will remain stopped after the emergency stop is cancelled. Manually start up each unit to restore the previous operation.

② When the ON/OFF signal is selected, the status will change from OFF to ON when the external input signal contact changes from OFF to ON, and will change from ON to OFF when the contact changes from ON to OFF.

(B) For pulse signal

① Even if the ON signal is input during ON, the status will remain ON.

② If the local remote controller is prohibited, the ON/OFF operation mode and temperature setting operations by the local remote controller will be prohibited.

③ Set the pulse width (contact ON time) to 0.5 to 1 sec.

4). Recommended circuit example

(A) For level signal

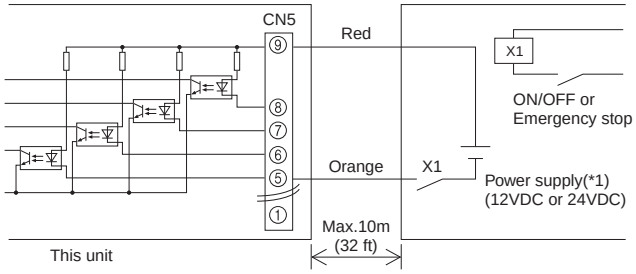

Use relays X1, X2, Y1, and Y2 that meet the following specifications.
Contact rating
Rated voltage >= 12VDC
Rated current >= 0.1A
Minimum applicable load =< 1mA at DC

(B) For pulse signal

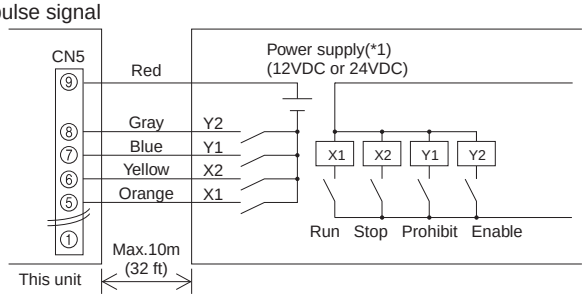

① The contact relay, DC power source, extension cable, etc., must be prepared separately at the site.
② The connection cable can be extended up to 10m (32 ft). (Use a 0.3mm^2 (AWG 22) or larger wire.)
③ Strip the extra cable near the connector, and securely insulate the exposed section with tape, etc.

(2). External signal output function

* To use the external signal input, an external I/O adapter (PAC-YG10HA; sold separately) and an external power supply are required.

1). External output

When one or more air conditioners are running, the " ON " signal will be output and if a malfunction occurs in one or more air conditioners, the " Malfunction " signal will be output.

2). External output specifications

CN5	Lead wire	Details of each terminal
No.1	Green	Common (External ground)
No.2	Black	ON/OFF
No.3	Brown	Malfunction/normal

①The " ON" signal is output even while the " Malfunction" signal is being output.

3). Recommended circuit example

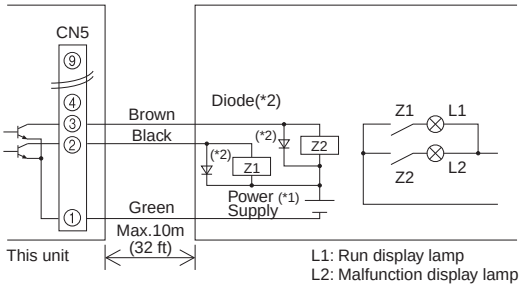

Use Z1 and Z2 relays that meet the following specifications.
Operation coil
Rated voltage : 12VDC, 24VDC
Power Consumption: 0.9W or less
(*1) Prepare a power supply separately according to the relay being used. (12VDC or 24VDC)
(*2) Always insert a diode on both ends of the relay coil.

① Each element will turn on while ON operation or a malfunction occurs.
② The connection cable can be extended up to 10m (32 ft).
③ The relays, lamps, diodes and extension cables, etc, must be prepared separately at the site.

NOTE

* When connecting the external input/output cables to connector CN5 on the controller, punch out the knockout hole.

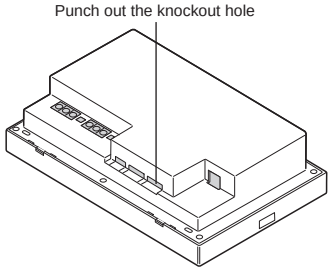

3. LAN connection function

When using the LAN connection function, connect the LAN cable to the LAN connector of this device.
❊Procure the LAN cable at the site, and use 100 BASE-TX Straight cable.
❊For a description of the IP address setting method, refer to Instruction Book.
❊LAN is 100 BASE-TX Specification.

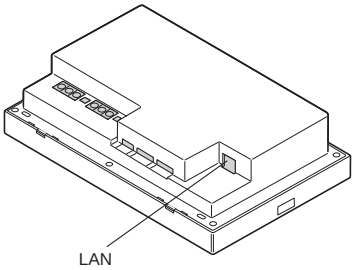

NOTE

❊ Perform the LAN wiring before installation, and wire up to the body by the same method as wiring the M-NET transmission line.
❊ When a LAN is already connected, decide the IP address by consultation with the system administrator and connect to the LAN body after changing the IP address.
❊ Connect AG-150A to a private network.
Use a security device such as a VPN router when connecting the AG-150A to the Internet to prevent unauthorized access.
(If no security devices are installed, the operation settings may be changed by an unauthorized person without the knowledge of the user.)

4. Browser screens of AG-150A

Condition List (Overview)

Condition List (Block)

Condition List (Overview/Floor Layout)

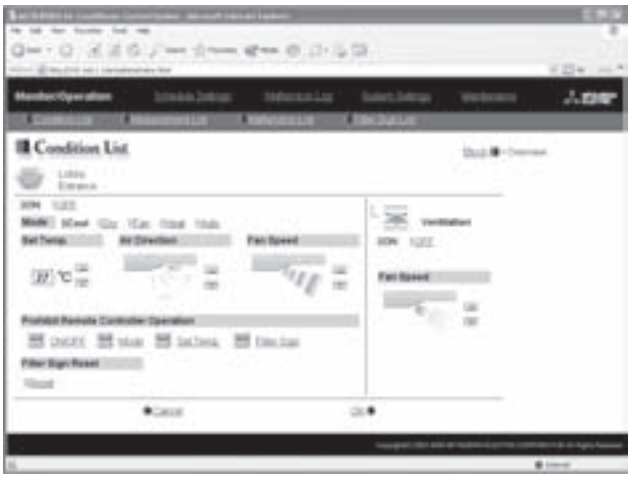

Operation

Malfunction List

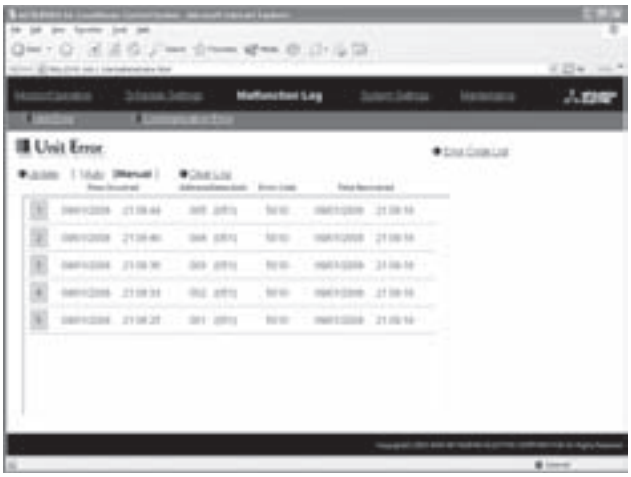

Malfunction Log

Weekly 1 Schedule

Weekly 1 Schedule (Setting screen)

Operation (DIDO Controller)

Measurement status monitor (temperature sensor/humidity sensor /measurement meter)

Trend Graph (temperature/humidity)

Trend Graph (Peak cut control)

5. Liquid crystal displays of AG-150A

Floor screen

Floor screen (Zoom-out display)

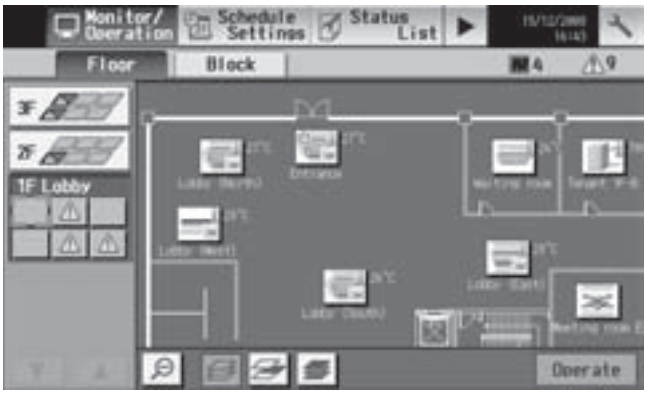

Floor layout screen

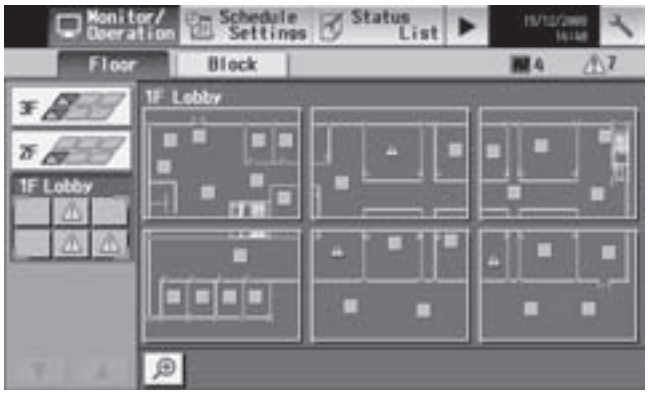

Floor layout screen (Zoom-out display)

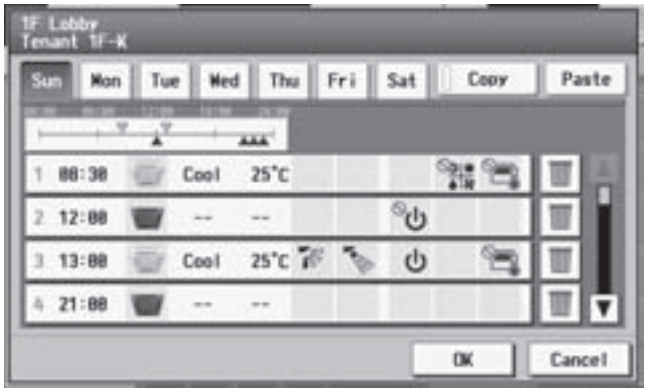

Weekly schedule setting screen

Annual schedule setting screen

Block display screen

Operation screen

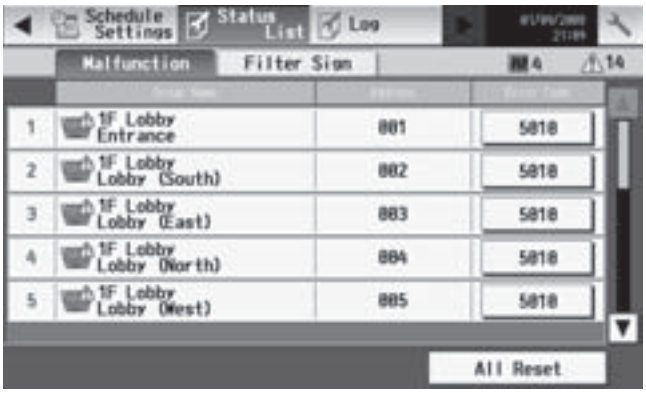

Error status screen

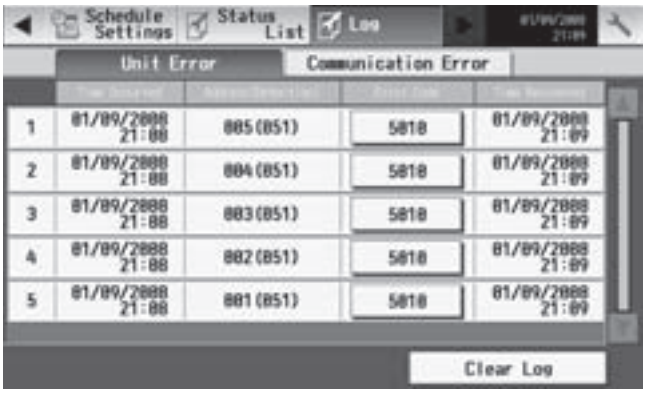

Error history display screen

6. Option

Model	Description
PAC-YG81TB	Mounting attachment B type for AG-150A wall-mount installations
PAC-YG83UTB	Electric box for AG-150A wall-embed installations
PAC-YG85KTB	Mounting attachment A type for AG-150A/PAC-SC51KUA wall-mount installations
PAC-YG71CBL	Black surface cover for AG-150A
PAC-YG10HA	External input/output adapter for G-50A/AG-150A

Controller

3-6. Centralized controller [GB-50A]

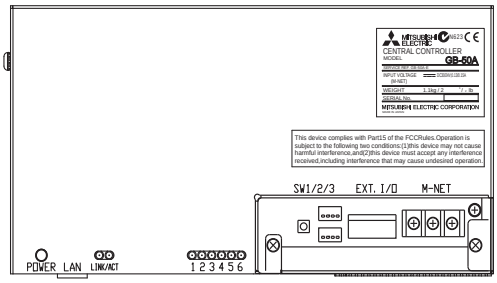

A. The centralized controller of GB-50A combines Web function, which permits system management through a PC browser. *1.
System control can even be managed remotely using public telephone lines.

*1 Microsoft® Internet explorer Ver. 5 or later by Microsoft Corporation is needed. Java® executing environment is needed. (Microsoft VM Ver.5.0 or later, or SUN Microsystems'® Java® plug-in Ver.1.4.2 or later). Microsoft is a registered trademark of Microsoft Corporation in the United States and other countries.
Sun Microsystems® and Java® are trademarks or registered trademarks of Sun Microsystems Inc. in the United States and/or other countries.

Note: Connect GB-50A to a private network.
Use a security device such as a VPN router when connecting the GB-50A to the Internet to prevent unauthorized access.

B. Together with integrated centralized control software TG-2000A and/or PI, DIDO controller, many optional functions like "Charging", "Peak-cut", "Energy saving", "General equipment management", "Scheduling" etc, can be performed. For details, please set to sections of TG-2000A /or PI, DIDO controller, PLC software.

C. One GB-50A can control a maximum of 50 units (including Lossnay). The TG-2000A can manage a maximum of 40 GB-50As and therefore can manage a maximum of 2000 units (including Lossnay).

D. Using GB-50A's web functions, an error notification email containing the address an error code can be sent to the appointed person's email address when a problem occurs in the air condition system which can release stand by personnel and save operation costs.

■ Functions

□:Each unit ○:Each group ●:Each block
△:Each floor ◎:Collective ×:Not available

Item	Description	Operations	Display
ON/OFF	ON and OFF operation for the air conditioner units	○◎●	○◎
Operation mode switching	Switches between Cool / Dry / Auto*/ Fan / Heat. (Group of LOSSNAY® unit : automatic ventilation/ vent - heat interchange/ normal ventilation) Operation modes vary depending on the air conditioner unit. *Auto only supported for the City Multi R2 and WR2 series.	○◎●	○
Temperature setting	Range of temperature setting Cool/Dry : 19°C - 30°C (14°C - 30°C) / 67°F - 87°F (57°F - 87°F) Heat : 17°C - 28°C (17°C - 28°C) / 63°F - 83°F (63°F - 83°F) Auto : 19°C - 28°C (17°C - 28°C) / 67°F - 83°F (63°F - 83°F) ( ) For PEFY/PFFY by setting DipSW 7-1 to ON and limits to NI6H fan speed only. ※ Range of temperature settings vary depending on model.	○◎●	○
Fan speed setting	Models with 4 air flow speed settings: Hi/Mid-2/Mid-1/Low Models with 3 air flow speed settings: Hi/Mid/Low Models with 2 air flow speed settings: Hi/Low Fan speed setting (including Auto) varies depending on the model.	○◎●	○
Air flow direction setting	Air flow direction angles 4-angle or 5-angle, Swing, Auto ※1: Louver cannot be set. Air flow direction settings vary depending on the model.	※1 ○◎●	○
Permit / Prohibit local operation	Individually prohibit operation of each local remote control function (ON/OFF, Change operation mode, Set temperature, Reset filter). ※2: When the local remote controller inactivation command is received from the main system controller, disabled mark appears in inverted display on the operation screen.	○◎●	※2 ○
Indoor unit intake temperature	Measures the intake temperature of the indoor unit only when the indoor unit is operating.	×	○
Error	When an error is currently occurring on an air conditioner unit, the afflicted unit and the error code are displayed. ※3: When an error occurs, the LED flashes. The operation monitor screen shows the abnormal unit by flashing it. The error monitor screen shows the abnormal unit address, error code and source of detection. The error log monitor screen shows the time and date, the abnormal unit address, error code and source of detection.	×	※3 □◎
Ventilation equipment	The interlocked system settings can be performed by the main system controller. When setting the interlocked system, you can use the ventilation switch to switch the free plan LOSSNAY settings between "Hi", "Low" and "Stop". When setting a group of only free plan LOSSNAY units, you can switch between "Normal ventilation", "Interchange ventilation" and "Automatic ventilation".	○	○
External input/output	By using accessory cables you can set and monitor the following. Input By level signal: "Batch ON/OFF", "Batch emergency stop" By pulse signal: "Batch ON/OFF", "Enable/disable local remote controller" Output "ON/OFF", "Error/Normal" ※4: Requires an external I/O cable (PAC-YG10HA; sold separately) and a commercially available external power supply.	◎※4	◎※4

*GB-50A requires a PC (field supplied) connected together to monitor and operate the air conditioner system.

■ External dimension

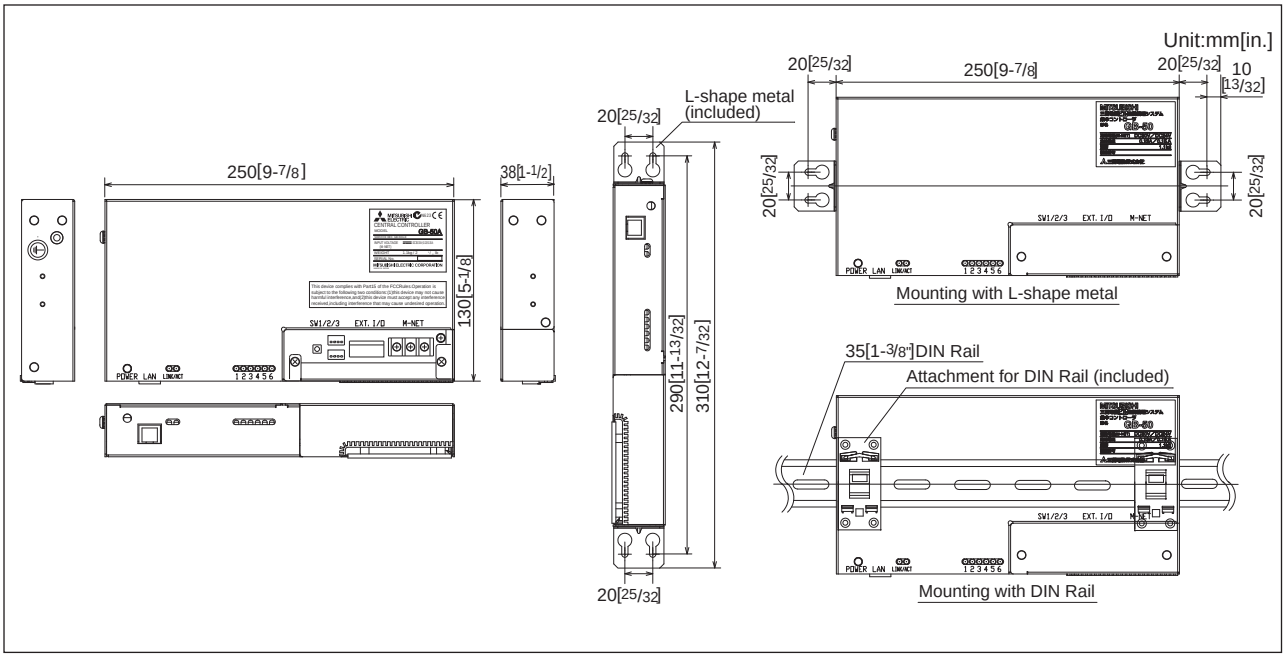

1. Power supply to GB-50A

GB-50A needs DC power supply of M-NET (24~32V) for centralized control transmission use, operating and LAN function use. GB-50A can have power supply using one of the following 2 methods.

(1). Power supply unit PAC-SC51KUA is the recommended power supply for GB-50A. See diagram below ; for details, please refer to 3-7 Power supply unit PAC-SC51KUA.

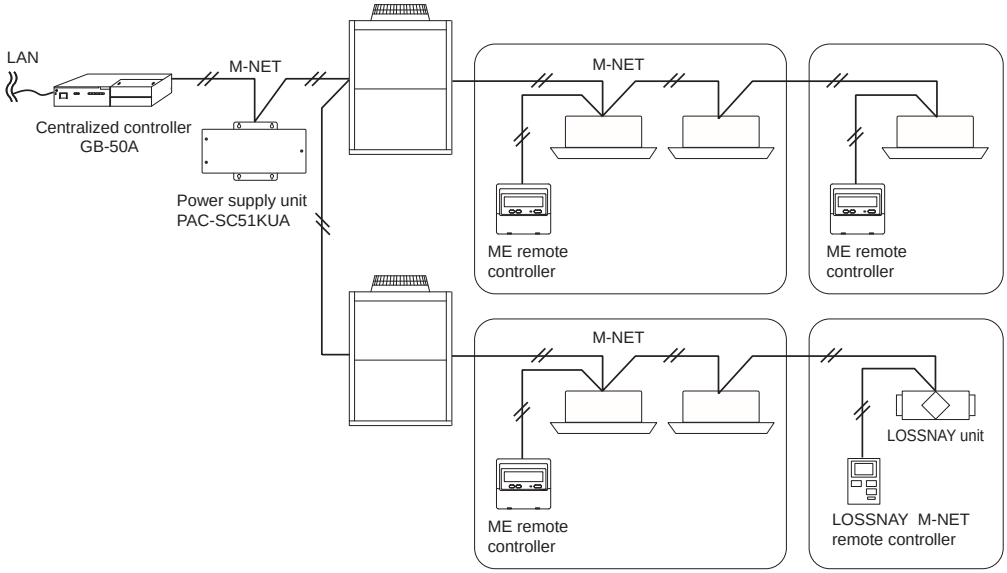

Fig. 1 GB-50A and PAC-SC51KUA basic scheme.

(2). Power supply of 30VDC (M-NET) from connector of TB7 of Outdoor unit.

1). TB7 of Outdoor unit.
As shown at Fig. 2, GB-50Areceives power supply of 30VDC from the connector of TB7 at the R410A Outdoor unit.*1
In the case, one of the Outdoor units should change its power supply switch of CN41 to CN40.
*1 : CITY MULTI models except PUMY.

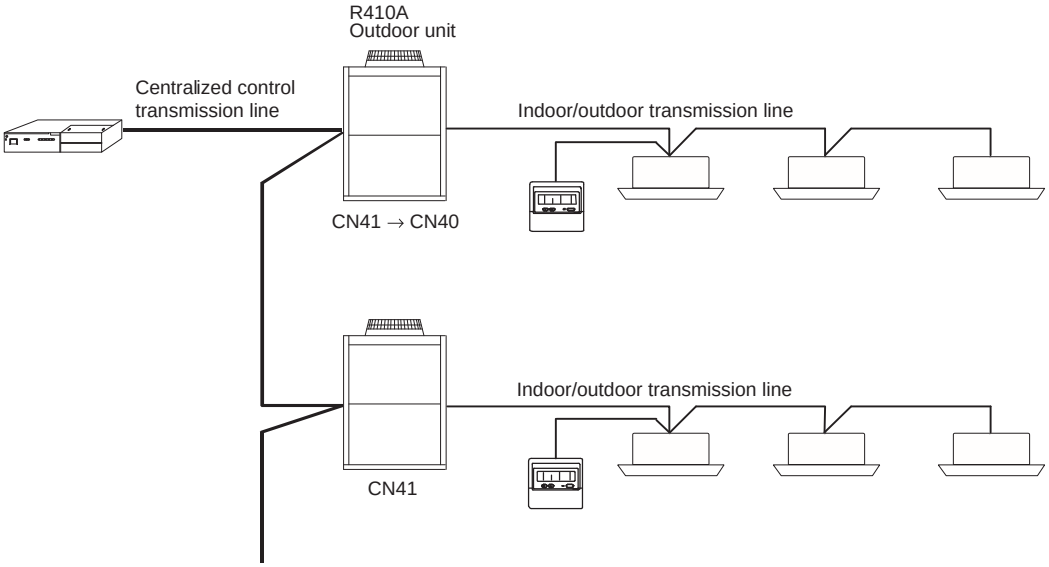

Fig. 2 GB-50A, TB7 power supply

2). The effect on connectable quantity of Indoor unit when TB7 is used to supply power to the GB-50A.

As Indoor unit controller and system controllers share the power supply from the Outdoor unit, the total power consumption of control use needs following considerations.
Taking the power consumption index of Indoor unit sized P20-P140 as 1, the equivalent power consumption index and supply capability index of others are listed at Table 1 and Table 2.

Table 1 The equivalent power consumption index by Indoor units, LOSSNAY, OA processing units, controllers

Indoor, OA unit	Indoor unit	BC controller	MA RC. LOSSNAY	ME Remote Contr.	Timers, System Contr.		ON/OFF Contr.	MN Converter	
Sized P20-P140	Sized P200,P250	CMB	PAR-21MAA PAC-YT51CRA(B) PAR-FA32MA LGH-RX-E PZ-60DR-E	PAR-F27MEA PZ-52SF	PAC-SF44SRA PAC-YT34STA AG-150A	GB-50A	PAC-YT40ANRA	CMS -MNF-B	CMS -MNG-E
1	7	2	0	1/4	1/2	3	1	1/2	2

*In order to ensure the transmission quality in start-up of outdoor unit (or during communication traffic), the number of system controllers that connect to indoor/outdoor transmission line in the same system, should not exceed three.
*RC : Remote Controller

Table 2 The equivalent power supply capability index of Trans.Booster, Power supply unit, Connector TB3, TB7 of Outdoor unit.

Transmission Booster	Power supply unit	Expansion controller	BM ADAPTER	Outdoor unit	Outdoor unit
PAC-SF46EPA	PAC-SC51KUA	PAC-YG50ECA	BAC-HD150	Connector TB3 and TB7 total *	Connector TB7 only
25	5	6	6	32	6

*If PAC-SC51KUA is used to supply power at TB7 side, no power supply need from Outdoor unit at TB7, Connector TB3 itself will therefore have 32.
*Connector TB3 of PUMY gives equivalent power only 12. TB7 of PUMY should not be used to supply power, and power supply unit should be used.

⚠ CAUTION

- When applying Charge and/or Peak-cut function on GB-50A, using a Power Supply Unit (PAC-SC51KUA) is recommended. GB-50A has the ability to receive power from the one of the Outdoor units, but there is a risk that a failure of the power supply from the Outdoor unit will cause GB-50A to shut down the whole system.
- On a multiple Outdoor unit system, the connector of CN41 is changed to CN40 at only one of the Outdoor units when TB7 is used to supply power. If that Outdoor unit fails, the connector at another unit can be changed from CN41 to CN40 to recover the power supply, but remember to change the CN40 back to CN41 at the failed Outdoor unit.

With the equivalent power consumption values in Table 1 and Table 2, PAC-SF46EPA can be designed into the air-conditioner system to ensure proper system communication according to A, B, C.

(A) Firstly, count from TB3 at TB3 side the total quantity of Indoor units, OA process units and ME remote controller, Timers and System controllers. If the total quantity reaches 40, a PAC-SF46EPA should be set. In this case, Indoor unit sized P200, 250 is counted as 7 Indoor units, but MA remote controller(s), LOSSNAY is NOT counted.

(B) Secondly, count from TB7 side to TB3 side the total transmission power consumption index. If the total power consumption reaches 32, a PAC-SF46EPA should be set. Yet, if a PAC-SC51KUA is used to supply power at TB7 side, count from index TB3 side only.

(C) Thirdly, count from TB7 at TB7 side the total transmission power consumption index, If the total power consumption reaches 6, a PAC-SF46EPA should be set.

■ System example

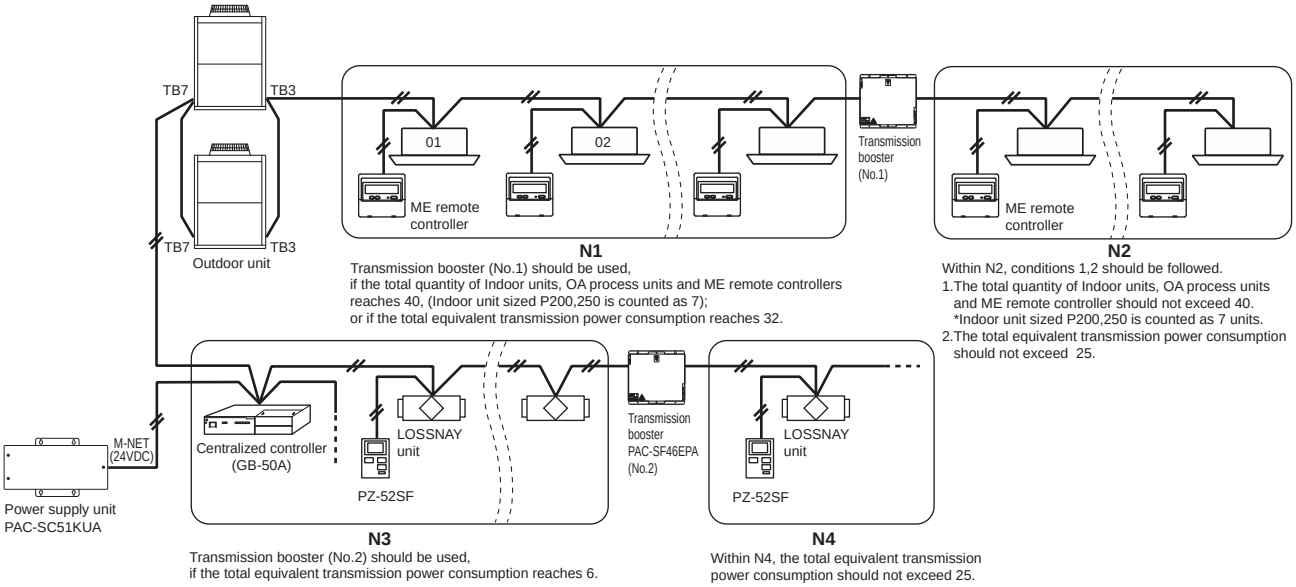

2. External input/output usage

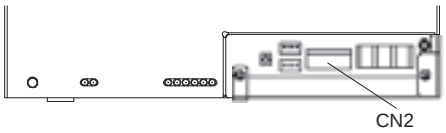

(1). External signal input function

※To use the external signal input, an external I/O adapter (PAC-YG10HA; sold separately) and an external power supply are required.

1). External input

Emergency stop/normal, run/stop and prohibit/enable of local remote controller operation can be controlled for all air conditioners being controlled by using a voltage (12VDC or 24VDC) contact signal from an external source.
(Select the function on the Initial Setting Web or the Initial Setting Tool)

No	External signal input function	Remarks
1	Do not use external input signal (factory setting)	――――――――――――――
2	Execute emergency stop/normal with level signal	The local remote controller ON/OFF operations, and the controller ON/OFF operation and prohibit/enable change operations will be prohibited during emergency stop.
3	Perform ON/OFF with level signal	The local remote controller ON/OFF operations, and the controller ON/OFF operations and prohibit/enable change operations will be prohibited.
4	Perform ON/OFF, prohibit/enable with pulse signals.	Set the pulse width while the contact is ON to 0.5 to 1 sec.

2). Level signal and pulse signal (12VDC or 24VDC)

(A) Level signal

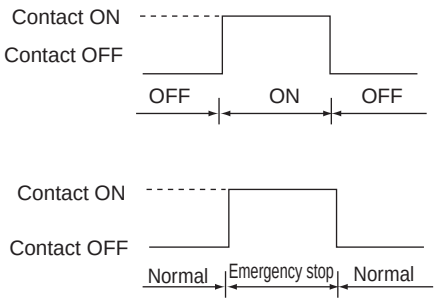

(B) Pulse signal
(Example) for ON/OFF

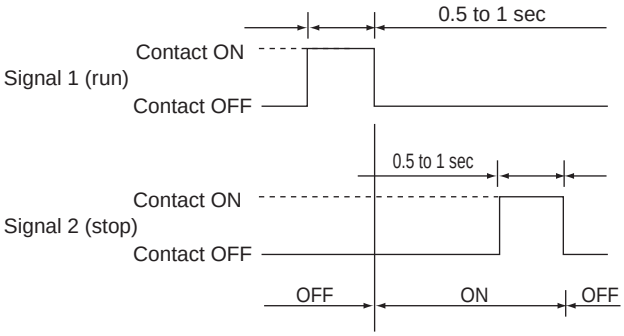

※The prohibit/enable input is the same.

3). External input specifications

CN2	Lead wire	Emergency stop/normal level signal	ON/OFF, level signal	ON/OFF, prohibit/enable pulse signal
No.5	Orange	Emergency stop/normal input	ON/OFF input	ON input
No.6	Yellow	Not used	Not used	OFF input
No.7	Blue	Not used	Not used	Local remote controller operation prohibit input
No.8	Gray	Not used	Not used	Local remote controller operation enable input
No.9	Red	External DC source “+”		

(A) For level signal

① When the emergency stop/normal signal is selected, the status will change from normal to emergency stop when the external input signal contact changes from OFF to ON, and will change from emergency stop to normal when the contact changes from ON to OFF. Emergency stop signal will bring the air conditioners to stop, and canceling the emergency stop will not automatically reset these units. To go back to the previous operation status, they must be manually turned back on.

② When the ON/OFF signal is selected, the status will change from OFF to ON when the external input signal contact changes from OFF to ON, and will change from ON to OFF when the contact changes from ON to OFF.

(B) For pulse signal

① Even if the ON signal is input during ON, the status will remain ON.

② If the local remote controller is prohibited, the ON/OFF operation mode and temperature setting operations by the local remote controller will be prohibited.

③ Set the pulse width (contact ON time) to 0.5 to 1 sec.

4). Recommended circuit example

(A) For level signal

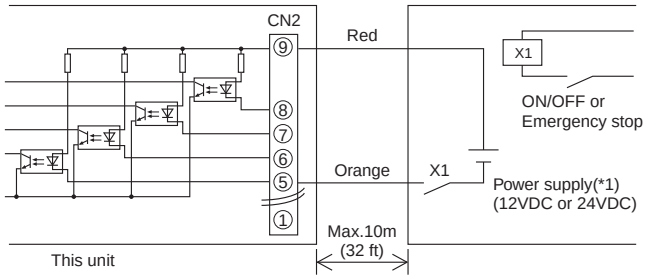

Use relays X1, X2, Y1, and Y2 that meet the following specifications.
Contact rating
Rated voltage >= 12VDC
Rated current >= 0.1A
Minimum applicable load =< 1mA at DC

(B) For pulse signal

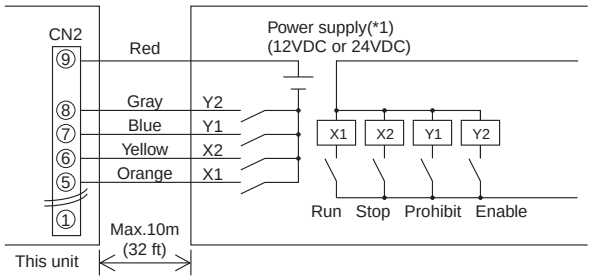

① The contact relay, DC power source, extension cable, etc., must be prepared separately at the site.
② The connection cable can be extended up to 10m (32 ft). (Use a 0.3mm^2 (AWG 22) or larger wire.)
③ Strip the extra cable near the connector, and securely insulate the exposed section with tape, etc.

(2). External signal output function

※ To use the external signal input, an external I/O adapter (PAC-YG10HA; sold separately) and an external power supply are required.

1). External output

When one or more air conditioners are running, the “ON” signal will be output and if a malfunction occurs in one or more air conditioners, the “Malfunction” signal will be shown.

2). External output specifications

CN 2	Lead wire	Details of each terminal
No.1	Green	Common (External ground)
No.2	Black	ON/OFF
No.3	Brown	Malfunction/normal

① " ON" signal and " Malfunction" signal will both be output.

3). Recommended circuit example

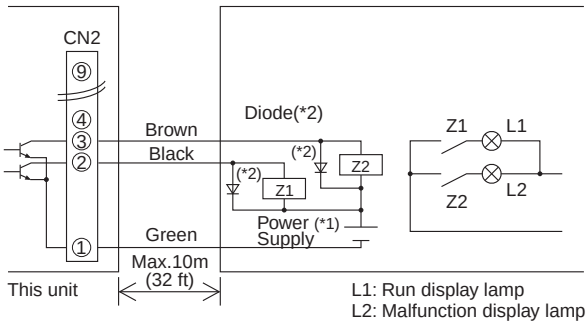

Use Z1 and Z2 relays having the following specifications.
Operation coil
Rated voltage :12VDC,24VDC
Power Consumption : 0.9W or less
(※1)Prepare a power supply separately according to the relay being used. (12VDC or 24VDC)
(※2)Always insert a diode on both ends of the relay coil.

① Each element will turn on while ON operation or a malfunction occurs.
② The connection cable can be extended up to 10m (32ft).
③ The relays, lamps, diodes and extension cables, etc, must be prepared separately at the site.

3. LAN connection function

Connect the LAN cable to the LAN connector of this device.
❊ Procure the LAN cable at the site, and use an enhanced category 5 UTP cable.
❊ For a description of the IP address setting method, refer to Installation Manual.
❊ LAN is 10 BASE-T Specification.
❊ The maximum wiring length from HUB to GB-50A is 100m [328ft].
❊ GB-50A is connected to the monitoring PC via HUB.

NOTE

❊ Perform the LAN wiring before installation, and wire up to the body by the same method as wiring the M-NET transmission line.
❊ When a LAN is already connected, decide the IP address by consultation with the system administrator and connect to the LAN body after changing the IP address.
❊ Space for the connector and wiring is required. Refer to Installation Manual.
❊ Connect GB-50A to a private network.
Use a security device such as a VPN router when connecting the GB-50A to the Internet to prevent unauthorized access.
(If no security devices are installed, the operation settings may be changed by an unauthorized person without the knowledge of the user.)

4. Browser screens of GB-50A

Condition List (Overview)

Condition List (Block)

Operation

Malfunction List

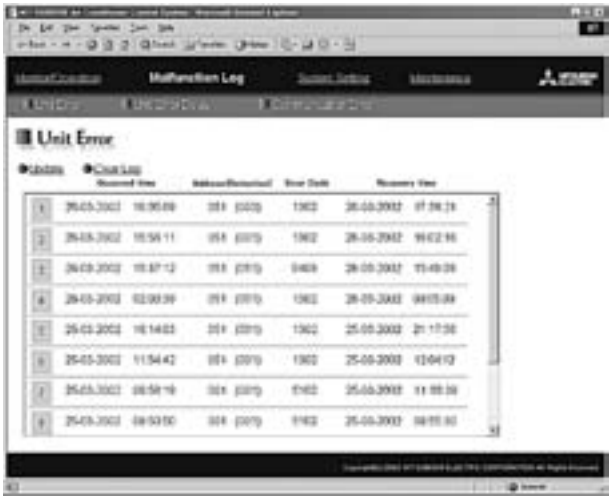

Malfunction Log

Weekly Schedule

Operation (DIDO Controller)

Measurement status monitor (temperature sensor/humidity sensor/measurement meter)

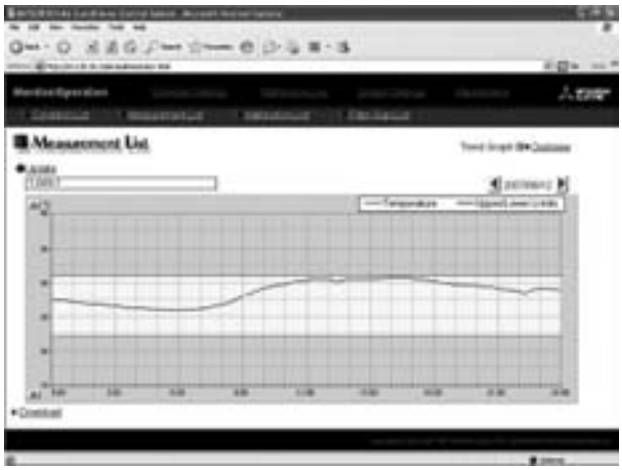

Trend Graph (temperature/humidity)

Trend Graph (Peakcut control)

3-7. Power supply unit [PAC-SC51KUA]

PAC-SC51KUA supplies DC power of M-NET (22-30V) and 24V at TB2 and TB3 respectively; the former is for centralized transmission use and the latter is for AG-150A operation and LAN function use.

1. When using PAC-SC51KUA as the power supplier for system controller, the capacity for system controller is considered as follows.

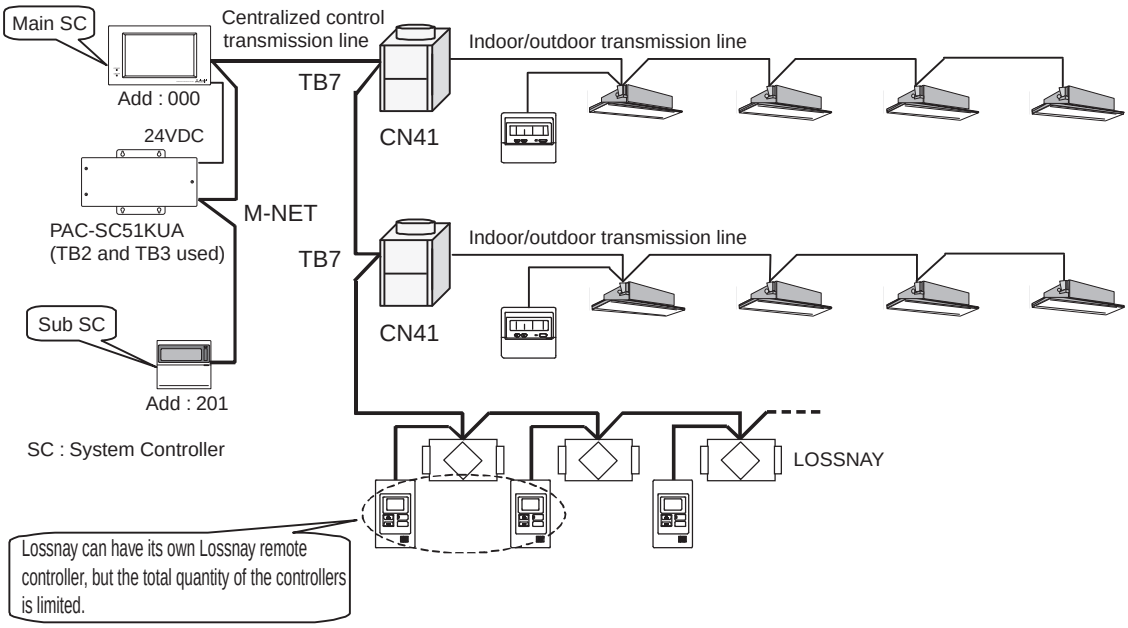

Fig. 1 Equivalent power consumption of controllers

In this case, pay attention to leave the power supply switch connector on CN41 of the Outdoor unit as the factory setting before shipment.

Taking the power consumption of the control board of Indoor unit as 1, the power consumption of various controllers is rated at Table 1.

Table 1 Equivalent power consumption of controllers

Centralized controller		Other system controllers		Remote controllers
AG-150A	GB-50A	ON/OFF remote controller (PAC-YT40ANRA)	System remote controller (PAC-44SRA) Schedule timer (PAC-YT34STA)	ME remote controller (PAR-F27MEA) LOSSNAY remote controller (PZ-52SF)
0.5	3	1	0.5	0.25

PAC-SC51KUA is capable to supply equivalent power up to 5, therefore the maximum connectable number of system controller is as follows.

Table 2 Max. connectable quianity of controller when using PAC-SC51KUA

Centralized controller*1		Other system controllers		Remote controllers
AG-150A	GB-50A	ON/OFF remote controller (PAC-YT40ANRA)	System remote controller (PAC-44SRA) Schedule timer (PAC-YT34STA)	ME remote controller (PAR-F27MEA) LOSSNAY remote controller (PZ-52SF)
1unit	1unit	5 units	10 units	20 units

*1: According to the system restrictions, PAC-SC51KUA can be connected to only one centralized controller.

As the air conditioner control system may combine all kinds of system controllers, the total power consumption of system controllers need to count with Table 2.
For example, the controller system contain 1 AG-150A, 2 ON/OFF remote controllers (PAC-YT40ANRA), 1 schedule timer (PAC-TY34STA), 6 Lossnay remote controllers connected at centralized control communication line.
Then the total power consumption is
1 x 0.5+2 x 1+1 x 0.5+6 x 0.25 = 4.5 < 5.
One PAC-SC51KUA is therefore enough. The total power consumption should not exceed 5.

2. When supply power to 1 AG-150A, the PAC-SC51KUA can supply power to other system controllers as follows.

Table3 Connectable number of system controller when 1 AG-150A is used.

V : Connectable

When connected to one AG-150A		Total number of ON/OFF remote controller(AN)					
		0	1	2	3	4	5
Total number of System remote controller(SR) Schedule timer(ST)	0	V	V	V	V	V	
	1	V	V	V	V	V	
	2	V	V	V	V		
	3	V	V	V	V		
	4	V	V	V			
	5	V	V	V			
	6	V	V				
	7	V	V				
	8	V					
	9	V					
	10						

⚠ CAUTION

- When applying Charge and/or Peak-cut function on AG-150A, Power Supply Unit (PAC-SC51KUA) is recommended to use. AG-150A is possible to receive power from one of the Outdoor units, but there is a risk that the failure of power supply from the Outdoor unit will cause AG-150A's functiondown on the whole system.

3. When supply power to 1 GB-50A, the PAC-SC51KUA can supply power to other system controllers as follows.

Table4 Connectable number of system controller when 1 GB-50A is used.

V : Connectable

When connected to one GB-50A		Total number of ON/OFF remote controller(AN)					
		0	1	2	3	4	5
Total number of System remote controller(SR) Schedule timer(ST)	0	V	V	V			
	1	V	V				
	2	V	V				
	3	V					
	4	V					
	5						
	6						
	7						
	8						
	9						
	10						

⚠ CAUTION

- When applying Charge and/or Peak-cut function on GB-50A, Power Supply Unit (PAC-SC51KUA) is recommended to use. GB-50A is possible to receive power from one of the Outdoor units, but there is a risk that the failure of power supply from the Outdoor unit will cause AG-150A's functiondown on the whole system.

■ External dimension

Unit:mm[in.]

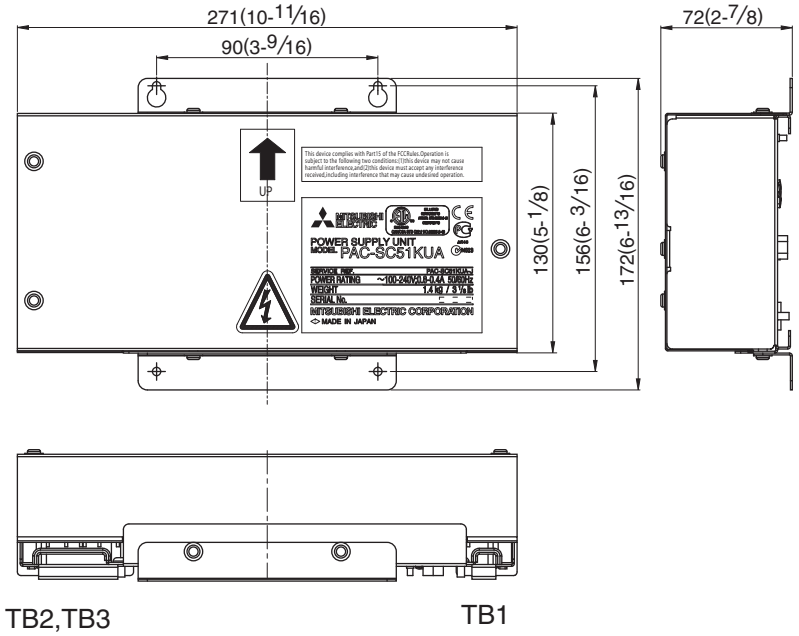

3-8. Expansion Controller [PAC-YG50ECA]

・PAC-YG50ECA can enhance units that AG-150A can control up to 150 by connecting 3 Expansion Controller (PAC-YG50ECA).
・PAC-YG50ECA has a built-in function to supply power to the M-NET transmission line. (power supply coefficient:6)

1.Specifisations

Items			Specifications
Power source	Rated input		100-240VAC ±10%0.4-0.3A50/60Hz
	Fuse		250VAC 3.15A Time-delay Type(IEC127-2.S.S.5)
Interface	Rated output of the power supply to M-NET transmission lines		22-30VDC
	External input/output		12VDC or 24VDC (requires an external power supply)
	LAN		100BASE-TX/10BASE-T
Ambient conditions	Temperature	Operating temperature range	-10~55°C [14~131°F]
		Storage temperature range	-20~60°C [-4~140°F]
	Humidity		30~90%RH (Non-condensing)
Dimensions			217 (H) × 250 (W) × 97.2 (D) mm [8-9/16(H) × 9-7/8(W) × 3-7/8(D)in.]
Weight			2.6kg [5-3/4lbs.]
Installation conditions			Inside the metal control board (indoor)

2.External dimensions

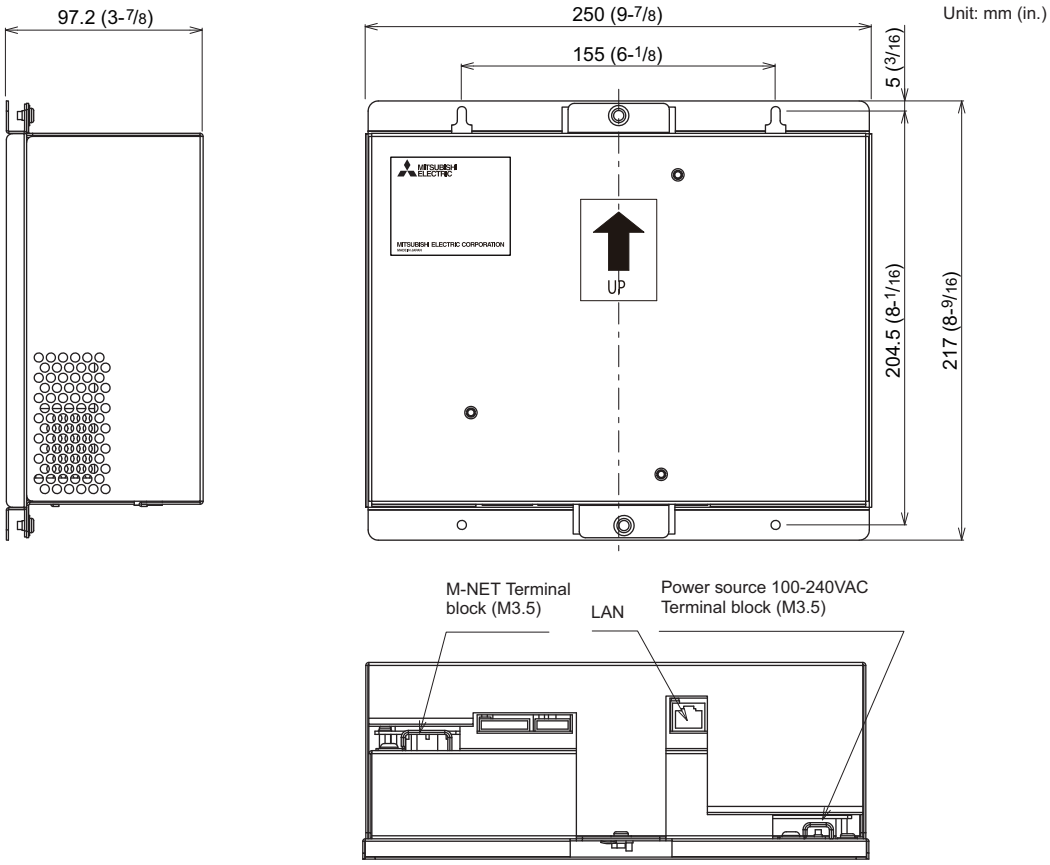

3.M-NET power supply

PAC-YG50ECA has a built-in function to supply power to the M-NET transmission line. (power supply coefficient:6)
When power is supplied from PAC-YG50ECA , the types of system controllers listed in the table below are connectable.

	System controller		M-NET remote controller
	ON/OFF remote controller	System remote controller Schedule timer Group remote controller	ME remote controller LOSSNAY remote controller
Power consumption coefficient	1	0.5	0.25
Connectable units	6 units	12 units	24 units

V:connectable

		Total number of ON/OFF remote controllers						
		0	1	2	3	4	5	6
Total number of system remote controllers, schedule timers, and group remote controllers combined.	0	V	V	V	V	V	V	V
	1	V	V	V	V	V	V	
	2	V	V	V	V	V	V	
	3	V	V	V	V	V		
	4	V	V	V	V	V		
	5	V	V	V	V			
	6	V	V	V	V			
	7	V	V	V				
	8	V	V	V				
	9	V	V					
	10	V	V					

Note:
- AG-150A, GB-50A, and BAC-HD150 cannot be used in the same M-NET system.
- Supplying power from the Outdoor unit or the power supply unit, it is necessary to replace power supply switch connector CN40 with CN41.(Factory default is CN40.)

4.Functions

Item	Description	Operations	Display
Error	When an error is currently occurring on an air conditioner unit, the afflicted unit and the error code are displayed. When an error occurs, the "Error" LED turns ON.	×	○
External input/output	By using accessory cables you can set the following. Input: By level signal: "Batch start/stop", "Batch emergency stop" By pulse signal: "Batch start/stop", "Enable/disable local remote controller"	○*1	×
	By using accessory cables you can monitor the following. Output: "Start/stop", "Error/Normal"	×	○*1
M-NET	The "M-NET" LED lights, when M-NET power supply is turned ON. The LED blinks while M-NET communicating.	×	○

[Symbol ○:enable ×:disable]

*1: Requires an external I/O cable (Model: PAC-YG10HA; sold separately) and an external power supply.

4.System configuration

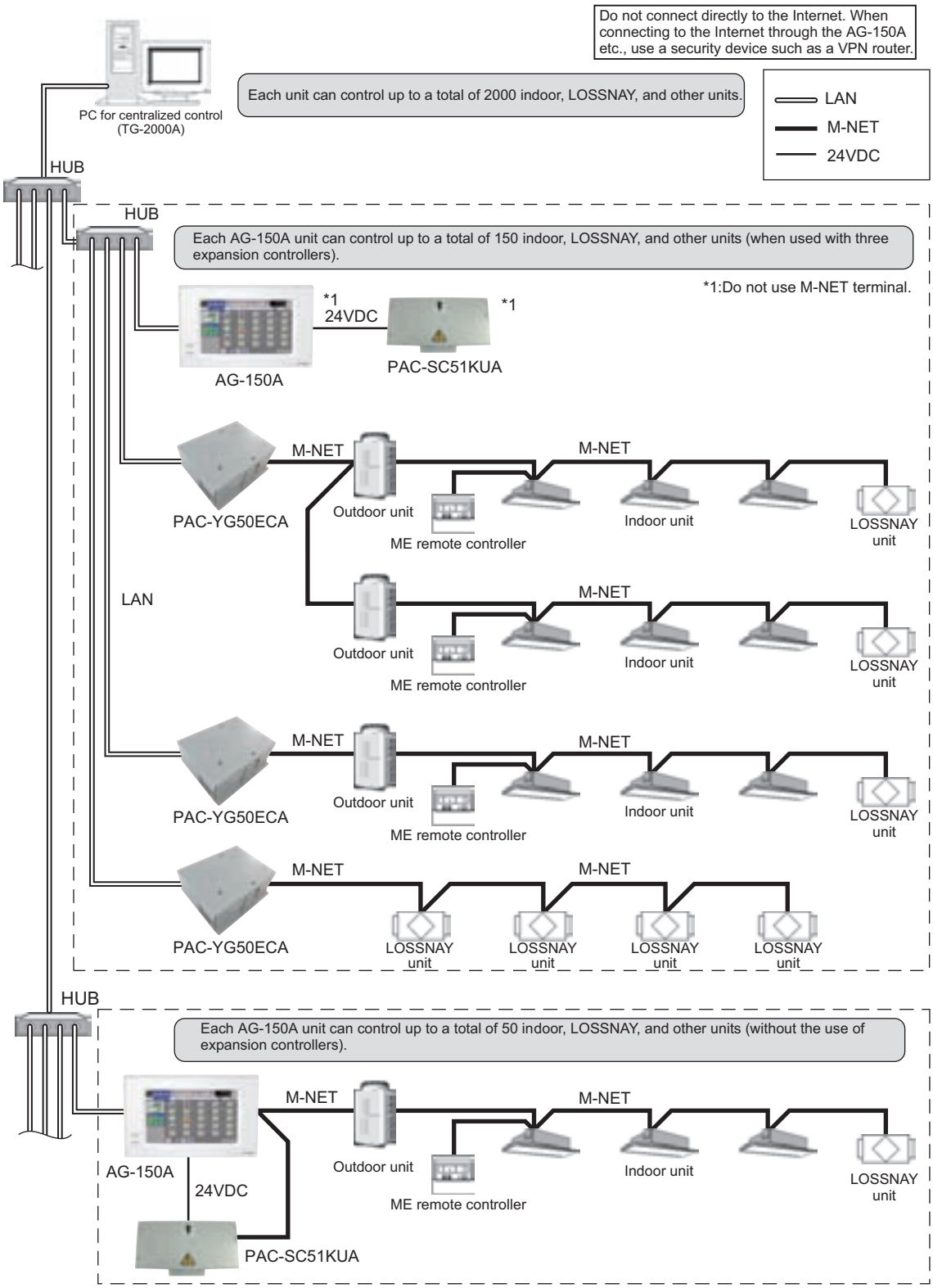

Note

Connect the LAN cable to the LAN connector on the PAC-YG50ECA.

- Connect the PAC-YG50ECA and AG-150A via a HUB.
- The maximum distance between the HUB and PAC-YG50ECA is 100 m (328 ft).
- The LAN cable is field-supplied. Use a category 5 or better straight cable.
- Use a switching HUB.
- It is recommended that the number of devices to be connected between AG-150A and PAC-YG50ECA does not exceed four. (Round-trip transmission delay time must not exceed four seconds. If the transmission delay time is set too long, a communication error may occur.)

3-9. Integrated centralized control software [TG-2000A]

1. Example of Basic System Configuration.

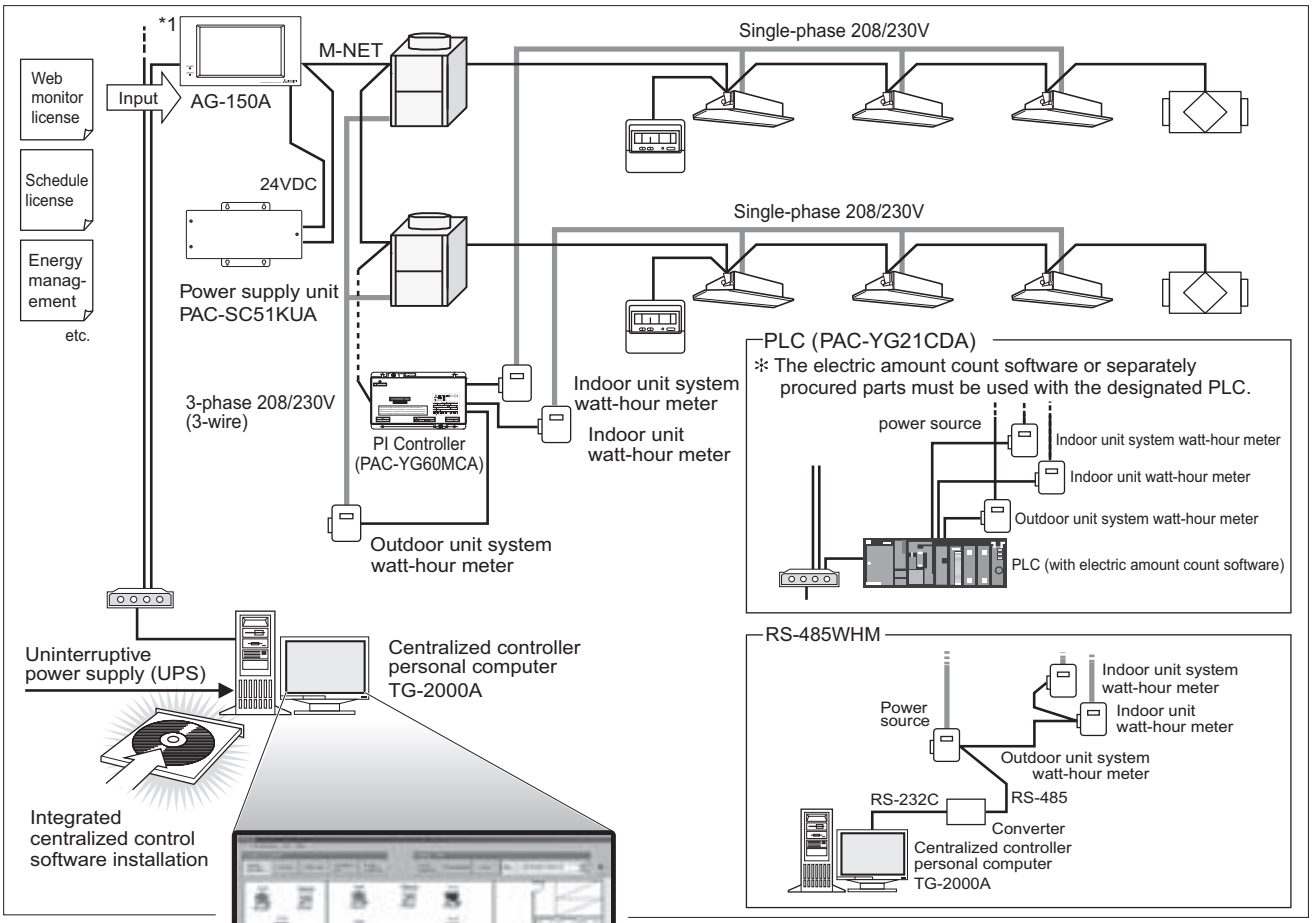

*1 GB-50A can be used.

The TG-2000A can realize the following functions using the AG-150A or GB-50A option (license).

- ✻ Operation/monitor
- ✻ Annual/weekly schedule
- ✻ Charge
- ✻ Energy saving
- ✻ Peak cut

Note : Depending on the versions of TG-2000A, AG-150A and GB-50A, some of the functions may not be available for use.

■ Main features of TG-2000A

① Up to 2000 units (40 AG-150A✻3 or GB-50A units) can be operated and monitored simultaneously.
② The air-conditioner layout can be displayed on the screen, making control and operation easier.
③ The annual and weekly schedules can be set. 5 schedules, such as the summer master and winter master, can be saved in the weekly schedule.
④ Air-conditioning charges can be calculated based on the multiple air-conditioner usage results. The power apportionment percentage data and apportioned power rate can be calculated for each indoor unit using the power apportionment function, and can be output as a CSV format file. ✻ Power apportionment charging is not possible with the old model, A control or K control.

Charging without WHM✻1 : The user manually inputs the power rate to calculate the air-conditioning charges. (Using a tool)
PI controller + pulse WHM charging✻1 : The pulse output WHM value is automatically tabulated by the PI controller (PAC-YG60MCA) to calculate the air conditioning charges.
RS-485 WHM charging✻1 : The RS-485 WHM value is automatically tabulated to calculate the air-conditioning charges.
PLC + pulse WHM charging✻1 : The pulse output WHM value is automatically tabulated by the PLC to calculate the air-conditioning charges.

⑤ Energy saving operation is possible using the "ON/OFF", "set temperature change", "fan operation changeover" and "performance save operation (60% to 90%)" functions.
Energy saving operation matching the amount of power in use is possible by using the PLC's electric amount count software.
⑥ Night Set-Back function operation is possible with schedule settings.✻2
⑦ General equipment can be operated and monitored.
⑧ General equipment can be schedule-controlled when using PAC-YG21CDA with PLC or DIDO Controller (PAC-YG66DCA). (For details of PLC refer to Installation Manual of PAC-YG21CDA.)

✻1: Only one of these functions can be used.
✻2: With Night Set-Back function, the CITY MULTI system can run at heating mode with target temperature set to 12°C / 54°F under schedule control. (It depends on the outdoor unit model. Not applicable on PUMY.) This function can protect the room from dropping down to extremely low temperature at mid-night.
✻3: AG-150A controls 50 units. When AG-150A is connected with PAC-YG50ECA, units are counted based on the number of connected PAC-YG50ECA. AG-150A connected with PAC-YG50ECA will be compatible with TG-2000A in the future.

Note: AG-150A is compatible with TG-2000A Ver.5.5* or later.
AG-150A connected with PAC-YG50ECA is compatible with TG-2000A Ver.6.1* or later.
Depending on the versions of TG-2000A and AG-150A/GB-50A, some of the functions may not be available for use.
("GB-50A" does not include "GB-50ADA.")

2. List of TG-2000A functions

(1). The data for each GB-50A can be grouped and used to control the operation of up to 2000 units in floor or block units, etc., from the personal computer screen. By using a PLC/PI Controller or a watt-hour meter, the power rate can be apportioned, energy saving control can be executed, and other general equipment can be controlled.

List of integral software functions

Item	Details	GB-50A license					
		Web monitor	Charge	Schedule	Energy saving	Energy (peak cut)	PLC for general equipment
ON/OFF	The units can be turned ON and OFF for all floors or in block, floor or group units.	V					
	The general equipment can be turned ON and OFF. (※ A PLC and the general equipment control PLC software required.)	V					
Operation modes	The operation mode can be switched between COOL, DRY, FAN, AUTO and HEAT for all floors or in block, floor or group units.	V					
Temperature setting	The room temperature can be set for all floors or in block, floor or group units. Set temperature range COOL / DRY : 19℃ to 30℃ / 67˚F to 87˚F HEAT : 17℃ to 28℃ / 63˚F to 83˚F AUTO : 19℃ to 28℃ / 67˚F to 83˚F ※ Depend on the model	V					
Fan speed	The fan speed can be set to four stages for all floors or in block, floor or group units.	V					
Air direction	The air direction can be set in four vertical directions or to swing for all floors or in block, floor or group units.(The selectable air direction differs according to the model.)	V					
Interlocked unit ON/OFF (LOSSNAY)	If there is an interlocked unit (LOSSNAY, the unit can be turned ON (strong/weak) or OFF for all floors or in block, floor or group units. (Note that the ventilation mode cannot be selected for interlocked units.)	V					
Local operation prohibit	The items for which operation with the local remote controller are to be prohibited can be selected for all floors or in block, floor or group units. (The items that can be prohibited are ON/OFF, operation mode, set temperature and filter sign reset.)	V					
Annual / weekly schedule	The annual/weekly schedule function can be used by registering the license. Two settings, such as seasonal settings for summer and winter, can be saved.	V		V			
Power rate apportionment charging (power rate manual input)	By registering the AG-150A/GB-50A unit license number, the power rate apportionment percentage data for each indoor unit can be output in CSV format. The power rate for each tenant can be easily calculated by having each user input the power rate manually.	V	V				
Power rate apportionment charging	An RS-485 watt-hour meter is connected to calculate the air-conditioning charges based on the amount each tenant's air-conditioner has operated. Two charging rates can be applied per day.	V	V				
	By using a PLC (with electric amount count software) and a watt-hour meter with pulse transmitter, the air-conditioning charges can be calculated based on the amount each tenant's air-conditioner has operated.Up to five charging rates can be applied per day.						
	By using the PI controller (PAC-YG60MCA) and a pulse output watt-hour meter, the air-conditioning charges can be calculated based on the amount each tenant's air-conditioner has operated. Up to five charging rates can be applied per day.						
History	The error history and up to 10000 items for operation history can be saved. Each history file can be output as a daily report or monthly report in CSV format. The maximum number of error history data that can be saved depends on the type of errors and the number of connected AG-150A/GB50A units. The operation history consists only of the operations carried out with the TG-2000A, and is limited to some limited operation items.	V					
Operation time monitor	The cumulative operation time of each indoor unit can be viewed or output as a CSV format file. (This function is valid only when the charging function license is registered.)	V	V				
Filter sign display mask	Automatic display of the filter sign can be disabled. (System batch.) In this case, the filter sign state is confirmed with manual operations .	V					
Energy saving control	Energy saving operation is possible using the "ON/OFF", "set temperature change", "fan operation changeover" and "performance save operation" functions.	V			V		
Energy saving (peak cut)	Energy saving operation matching the amount of power in use is possible. (PLC (with electric amount count software) and watt-hour meter with pulse transmitter are required.)	V				V	
Night Set-Back function ※1	Heating from 12˚C / 54˚F and higher can be set using the schedule function.	V					
Set temperature limit ※2	The set temperature lower limit can be set for cooling and the upper limit for heating. (Valid only when PAR-F27MEA is used.)	V					
Control other general equipment	It is possible to control other general equipment on ON/OFF operation / monitoring / Alarm / scheduling, if TG-2000A combines PLC installed with PLC software PAC-YG21CDA.	V					
	Setting inter-lock with CITY MULTI indoor units is possible using PLC(PAC-YG21CDA). (Table setting tool for input/output definition is needed.)	V					V
	The ON/OFF status of the connected general equipment and the error status can be changed or monitored from the DIDO(PAC-YG66DCA).	V					

※1 : With Night Set-Back function, the CITY MULTI system (PUMY models excluded) can run at heating mode with target temperature set to 12˚C /54˚F under schedule control.
(It depends on the outdoor unit model.)
This function can protect the room from dropping down to extremely low temperature at midnight.
※2 : This function cannot be used with the MA remote controller. (It depends on the indoor unit model.)
Note : Depending on the versions of TG-2000A and GB-50A, some of the functions may not be available for use.

(2). The data for each AG-150A can be grouped and used to control the operation of up to 2000 units in floor or block units,etc., from the personal computer screen. By using a PI Controller/PLC or a watt-hour meter, the power rate can be apportioned, energy saving control can be executed, and other general equipment can be controlled.

List of integral software functions

Item	Details	AG-150A license			
		Web monitor	Schedule	Energy management	PLC for general equipment
ON/OFF	The units can be turned ON and OFF for all floors or in block, floor or group units.	V			
	The general equipment can be turned ON and OFF. (⁎ A PLC and the general equipment control PLC software required.)	V			
Operation modes	The operation mode can be switched between COOL, DRY, FAN, AUTO and HEAT for all floors or in block, floor or group units.	V			
Temperature setting	The room temperature can be set for all floors or in block, floor or group units. Set temperature range COOL / DRY : 19℃ to 30℃ / 66°F to 86°F HEAT : 17℃ to 28℃ / 63°F to 82°F AUTO : 19℃ to 28℃ / 66°F to 82°F ⁎ Depend on the model	V			
Fan speed	The fan speed can be set to four stages for all floors or in block, floor or group units.	V			
Air direction	The air direction can be set in four vertical directions or to swing for all floors or in block, floor or group units.(The selectable air direction differs according to the model.)	V			
Interlocked unit ON/OFF (LOSSNAY)	If there is an interlocked unit (LOSSNAY, the unit can be turned ON (strong/weak) or OFF for all floors or in block, floor or group units. (Note that the ventilation mode cannot be selected for interlocked units.)	V			
Local operation prohibit	The items for which operation with the local remote controller are to be prohibited can be selected for all floors or in block, floor or group units. (The items that can be prohibited are ON/OFF, operation mode, set temperature and filter sign reset.)	V			
Annual / weekly schedule	The annual/weekly (season:weekly x 2) schedule function can be used by registering the license. Five settings, such as seasonal settings for summer and winter, can be saved.	V	V		
Power rate apportionment charging (power rate manual input)	By registering the AG-150A/GB-50A unit license number, the power rate apportionment percentage data for each indoor unit can be output in CSV format. The power rate for each tenant can be easily calculated by having each user input the power rate manually.	V		V	
Power rate apportionment charging	By using the PI controller (PAC-YG60MCA) and a pulse output watt-hour meter, the air-conditioning charges can be calculated based on the amount each tenant's air-conditioner has operated. Up to five charging rates can be applied per day.	V		V	
	By using a PLC (with electric amount count software) and a watt-hour meter with pulse transmitter, the air-conditioning charges can be calculated based on the amount each tenant's air-conditioner has operated.Up to five charging rates can be applied per day.				
	An RS-485 watt-hour meter is connected to calculate the air-conditioning charges based on the amount each tenant's air-conditioner has operated. Two charging rates can be applied per day.				
History	The error history and up to 10000 items for operation history can be saved. Each history file can be output as a daily report or monthly report in CSV format. The maximum number of error history data that can be saved depends on the type of errors and the number of connected AG-150A units. The operation history consists only of the operations carried out with the TG-2000A, and is limited to some limited operation items.	V			
Operation time monitor	The cumulative operation time of each indoor unit can be viewed or output as a CSV format file. (This function is valid only when the charging function license is registered.)	V		V	
Filter sign display mask	Automatic display of the filter sign can be disabled. (System batch.) In this case, the filter sign state is confirmed with manual operations .	V			
Energy saving control	Energy saving operation is possible using the "ON/OFF", "set temperature change", "fan operation changeover" and "performance save operation" functions.	V		V	
Energy saving (peak cut)	Energy saving operation matching the amount of power in use is possible. (PLC (with electric amount count software) and watt-hour meter with pulse transmitter are required.)	V		V	
Night Set-Back function ⁎1	Heating from 12°C / 54°F and higher can be set using the schedule function.	V			
	This function helps keep the indoor temperature in the temperature range while the units are stopped and during the time this function is effective.	V			
Set temperature limit ⁎2	The set temperature lower limit can be set for cooling and the upper limit for heating. (Valid only when PAR-F27MEA is used.)	V			
Control other general equipment	The ON/OFF status of the connected general equipment and the error status can be changed or monitored from the DIDO(PAC-YG66DCA).	V			
	It is possible to control other general equipment on ON/OFF operation / monitoring / Alarm / scheduling, if TG-2000A combines PLC installed with PLC software PAC-YG21CDA.	V			
	Setting inter-lock with CITY MULTI indoor units is possible using PLC(PAC-YG21CDA). (Table setting tool for input/output definition is needed.)	V			V

⁎1 : With Night Set-Back function, the CITY MULTI system (PUMY models excluded) can run at heating mode with target temperature set to 12°C /54°F under schedule control.(It depends on the outdoor unit model.)
This function can protect the room from dropping down to extremely low temperature at midnight.
⁎2 : This function cannot be used with the MA remote controller. (It depends on the indoor unit model.)
Note : Depending on the versions of TG-2000A and AG-150A, some of the functions may not be available for use.

3. Screens of TG-2000A

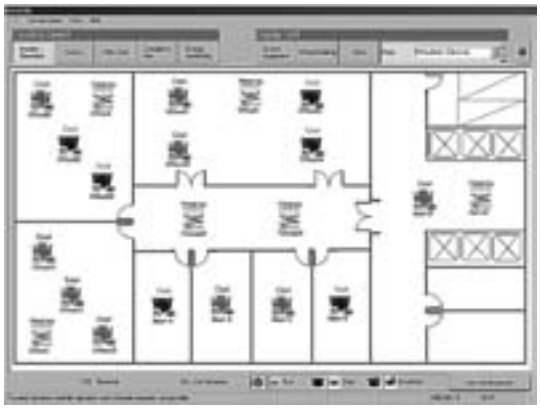

Floor screen

Weekly schedule screen

Block screen

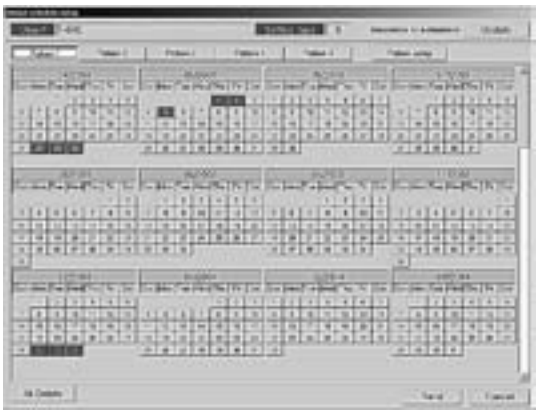

Annual schedule screen

All floor screen

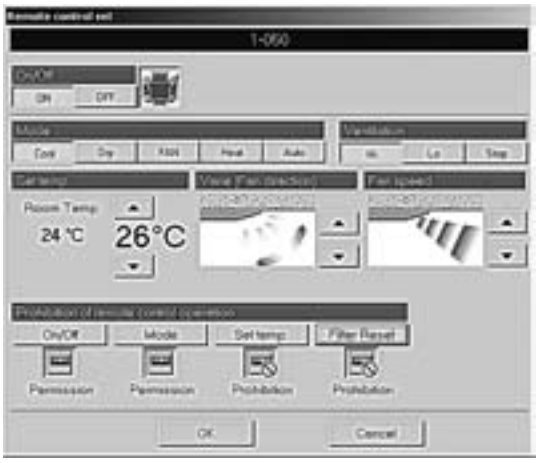

Operation setting screen

Air-conditioning charge screen

4. Requirements (system recommendations)

We recommend the following software and hardware when using this application (TG-2000A).

	TG-2000A version	System Requirements
When AG-150A/GB-50A-compatible TG-2000A is used	TG-2000A Ver.5.50 or later *1 *2	OS : Windows Vista/XP Refer to the table below for details.
When GB-50A-compatible TG-2000A is used with the range of conventional functions	TG-2000A Ver.5.30 or later	OS : Windows XP/2000 Refer to the table below for details.

*1 : TG-2000A Ver.5.20 is upgraded to Ver.5.50 or later.
*2 : Use version 6.10 or later for the AG-150A systems with connection to expansion controllers (PAC-YG50ECA).

Item	Requirement		Recommended
PC	PC/AT interchangeable machine (Recommended: HP and DELL)		Operation check completed, using HP and DELL (Business model is recommended)
CPU	Core™ 2 Duo 1.66GHz or faster (Windows Vista for Core 2 Duo)		Core™ 2 Duo 2.4GHz or faster
	Pentium® M 1.7GHz or faster		Pentium® M 2.0GHz or faster
	Pentium® 4 2.4GHz or faster		Pentium® 4 2.8GHz or faster
Memory	In Windows Vista : 1GB or more		2GB or more
	In Windows XP / 2000 : 512MB or more		1GB or more
HDD	Standard	6GB or more (2GB or more of C drive free space necessary)	40GB or more of C drive free space necessary When using the trend function, the drive used for automatic output must have the following free space according to the number of groups. 200 groups = 2GB, 500 Groups = 5GB, 1000 groups = 10GB, 2000 groups = 20GB
	Wide area	20GB or more (Free space)	Standard : max. 200MB/site
Storage device	CD-ROM drive, USB drive		Devices other than those shown at the left may also be installed.
Resolution	1024 x 768 or higher, 65536 colors or more		
Serial port	1 port or more		Required when using RS-485 communication WHM (Not necessary when using PLC or PI Controller)
LAN	1 port (10BASE-T/100BASE-TX)		* 1
Modem	56K modem or TA		Required when using a modem in wide area mode.
USB	2 port or more		It uses it for the data backup.
OS	Windows® Vista Business Service Pack 2		English version only *Computer must support each OS.
	Windows® XP Professional Service Pack 3 *2		English version only *Computer must support each OS.
	Windows® 2000 Professional Service Pack 4 *2		English version only *Computer must support each OS.
Other	Computer must be dedicated for this use (TG-2000A).		**Must be used for 24-hour constant operation** **(Only some functions. Refer to the TG-2000A manual for details.)**

*1 Purchase the option, or use the equipment recommended for the computer when purchasing the computer.
*2 Make sure that the correct version of Service Pack is installed. If the wrong version of Service Pack is installed, TG-2000A will not be set up properly.

5. Compatible Units

The TG-2000A has two main functions: centralized control of air conditioners and cost accounting. However, not all functions are available with all air conditioners.

Table: Compatible units and function list (○: supported, △: Certain restrictions apply, ×: Not supported)

Model \ Function	Control/ Maintenance	Charging (Billing) without WHM	Charging (Billing) with WHM	Energy Saving /Peak Cut
Y series	○	○ ✻1		○
HP series	○	○ ✻1		○
R2 series	○	○ ✻1		○
WR2 series	○	○ ✻1		○
WY series	○	○ ✻1		○
Multi S series	○	○ ✻1		○✻6
Indoor unit	○	○ ✻2		○
LOSSNAY	○	○ ✻3		△✻7
OA processing unit	○	○ ✻1		△✻8
Air To Water Booster unit	○	×	△✻12	△✻13
Air To Water HEX unit	○	×	△✻12	△✻13
"A" control type ✻4	○ (Adapter required)	○ ✻1,5		△✻9
"K" control type ✻4	○ (Converter required)	○ ✻1,5		△✻10
Room Air Conditioner	○ (Adapter required)	×	△ (Requires separate watt hour meters. Bills calculated based on the reading of each watt hour meter)	△✻11

✻1 : Can be calculated for each charging block. May not be available with some older models.

✻2 : Indoor unit models before Free Plan models do not support a charge apportioning billing method based on the “capacity save”. The existence of even a single unit of those types in the system requires that the method of charge apportioning billing be set to either “Thermo on time” or “Fan operation time”.

✻3 : LOSSNAY groups to which the remote controller is connected support the charging system.

✻4 : Not all of the A-control and K-control units support these functions. The calculation of the charge for the auxiliary heater may not be handled by these units.

✻5 : For A-control and K-control units, use the apportioned charging methods that are listed in "Thermo on time" or "Fan operation time" section. Otherwise, install an watt-hour meter for each unit.

✻6 : Outdoor unit capacity control function is not available.

✻7 : Only the function to stop the units is available.

✻8 : When the attribute is IC (indoor unit): Same type of energy-save control unit as with the Freeplan Indoor unit is possible. When the attribute is FU (LOSSNAY with a heater/humidifier): no direct energy-save control is possible.

✻9 : Inverter models support the outdoor unit capacity save control function.

✻10 : Outdoor unit Thermo-OFF control function is not supported. Only the fan speeds control function is available.

✻11 : Only the temperature control function or the function to stop the units is available.

✻12 : For the charge apportioning of Air To Water Booster unit and Air To Water HEX unit, connect the unit to individual watt-hour meter. Although only the heating capacity is listed in the specification of Air To Water Booster unit, the "cooling" value is used for the Capacity and Power input of indoor unit parameter for Energy-Monitoring Set Up. The setting is already made with the cooling value for the models registered in Set-up of model name. For Air To Water Booster unit and Air To Water HEX unit, the charging function supports only the primary refrigerant system of those units. (Each unit obtains the reading of its watt-hour meter.)

✻13 : Capable of Thermo-OFF control (fan operation control) and bringing the units to stop only.

3-10. Electric amount count software [PAC-YG11CDA]

MITSUBISHI ELECTRIC offers a charging function for its air conditioner system. Detailed output of every indoor for electricity consumption of air-conditioning is available. The electricity consumption of the air-conditioner is counted based on the refrigerant consumption of every indoor unit, which allows for precise proportion of electricity consumption.

■ System example

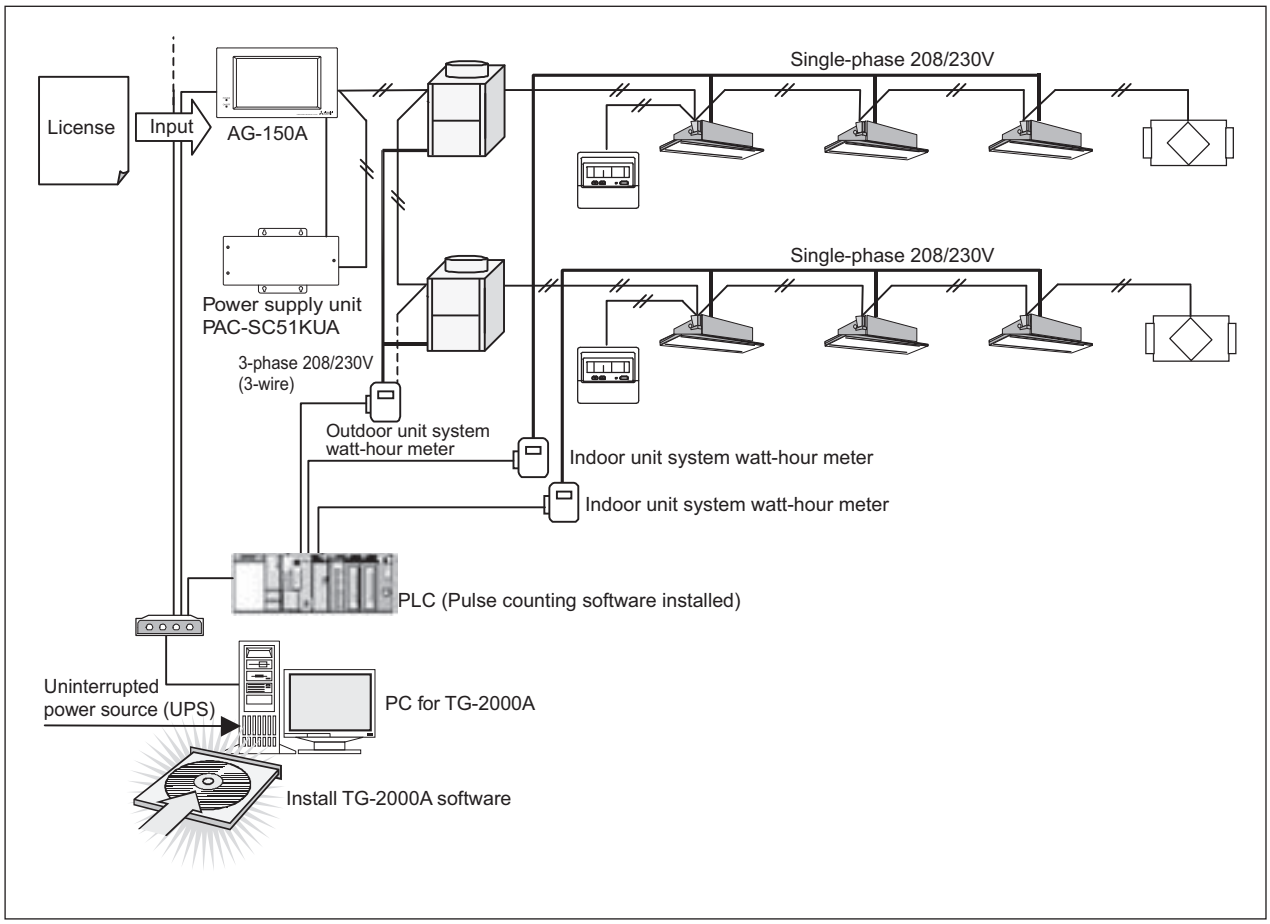

■ Necessary parts for the system

Name (Model name)	Manufacturer	Remarks
PC for central control	PC/AT convertible unit	Confirmed operation of DELL, HP. For details, ref er to AG-150A Technical Manual.
TG-2000A	MITSUBISHI ELECTRIC	The use of the latest version of TG-2000A and AG-150A is recommended.
Charge license	MITSUBISHI ELECTRIC	Requires for each AG-150A/GB-50A.
Web monitor license	MITSUBISHI ELECTRIC	Requires for each AG-150A/GB-50A.
PLC	MITSUBISHI ELECTRIC	PLC for pulse counting connects maximum 5 sets. For details, refer to Installation Manual of PAC-YG11CDA.
PAC-YG11CDA	MITSUBISHI ELECTRIC	For details, refer to AG-150A Technical Manual.
Watt-hour meter with pulse oscillator	MITSUBISHI ELECTRIC	For the specification of the watt-hour meter, refer to AG-150A Technical Manual.
Uninterrupted power source (UPS)		Field supplied.

3-11. PLC software for general equipment [PAC-YG21CDA]

MITSUBISHI ELECTRIC's Air Conditioner control system can combine control of general equipment like lighting, air conditioners from other manufacturers, etc.
Functions on general equipment : On/Off operation, alarm, monitoring, scheduling.

■ System example

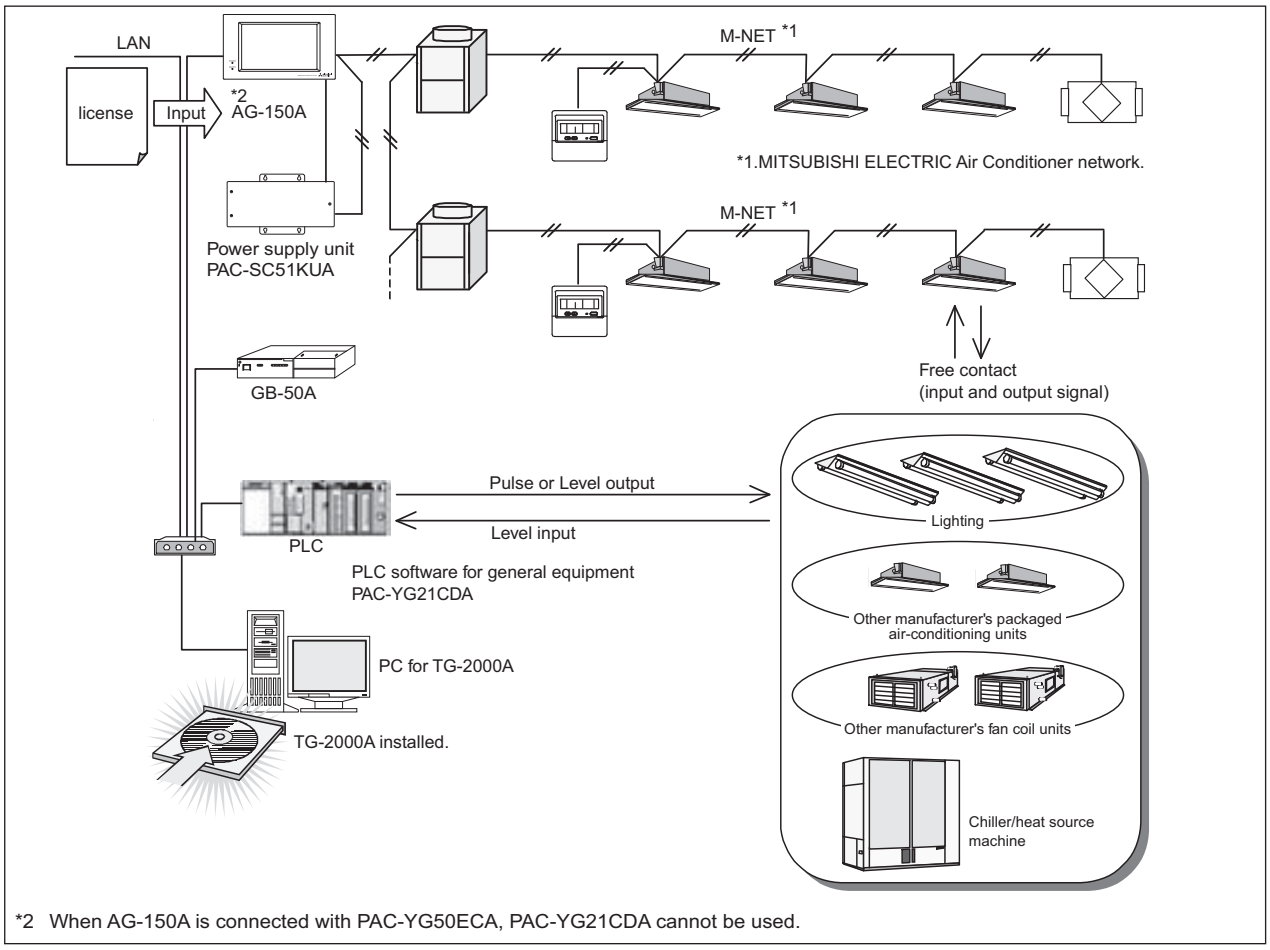

*2 When AG-150A is connected with PAC-YG50ECA, PAC-YG21CDA cannot be used.

■ Necessary parts for the system

Materials (model names)	Manufacturer	Remarks
PC for central control	PC/AT compatible	Confirmed operation of DELL, HP. For details, refer to AG-150A Technical Manual.
TG-2000A	MITSUBISHI ELECTRIC	The use of the latest version of TG-2000A and AG-150A/GB-50A is recommended.
Web monitor license	MITSUBISHI ELECTRIC	Requires for each AG-150A/GB-50A.
PLC for general equipments license	MITSUBISHI ELECTRIC	Table-setting of input/output is necessary.
PLC	MITSUBISHI ELECTRIC	Make sure DI board and DO board are mounted.
PAC-YG21CDA	MITSUBISHI ELECTRIC	For details, refer to AG-150A Technical Manual.

3-12. BM ADAPTER [BAC-HD150]

CITY MULTI can easily combine into a Building Management System (BMS) via the BACnet®and M-NET adapter BAC-HD150.
BACnet is an opened transmission protocol widely used at BMS, and related equipment control.
CITY MULTI is therefore compatible with large-scaled BMS management via BACnet.
BAC-HD150 can control up to 50 units/groups(including LOSSNAY). Up to 150 units/groups(including LOSSNAY) can be controlled from one BAC-HD150 with three expansion controllers PAC-YG50ECA.(50 units/PAC-YG50ECA)

■Specifications

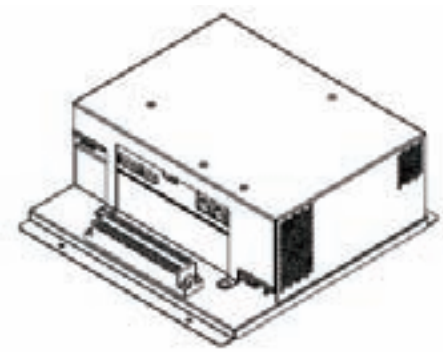

Items			Specifications
Power source	Rated input		100-240 VAC ±10 % 0.4-0.3 A 50/60 Hz
	Fuse		250 VAC 3.15 A Time-delay type (IEC127-2 S.S.5)
Interface	Rated output of the power supply to M-NET transmission lines		22-30 VDC
	LAN 1 (for BACnet) LAN 2 (for Expansion Controller)		10Base-T or 100Base-TX
Ambient conditions	Temperature	Operating temperature range	-10 ~ 55°C (14 ~ 131°F)
		Storage temperature range	-20 ~ 60°C (-4 ~ 140°F)
	Humidity		30 ~ 90 %RH (Non-condensing)
Dimensions			266 (H) × 250 (W) × 97.2 (D) mm (10-1/2 (H) × 9-7/8 (W) × 3-7/8 (D) in.)
Weight			2.8 kg (6-3/16 lbs.)
Installation conditions			Inside the metal control panel (indoor)

■ Functions

Communication items at BM Adapter

Operation	State Monitoring
On/Off	On/Off
Mode	Mode
Fan Speed	Fan Speed
Air Direction	Air Direction
Set Temp.	Set temp.
Filter Sign reset	Filter sign
	Indoor temperature
Prohibit local On/Off	Prohibit local On/Off
Prohibit local Mode	Prohibit local Mode
Prohibit local Filter sign reset	Prohibit local Filter sign reset
Prohibit local Set Temp.	Prohibit local Set Temp.
Forced Off	
	Alarm signal
	Error code
	Communication state

■ External Dimensions

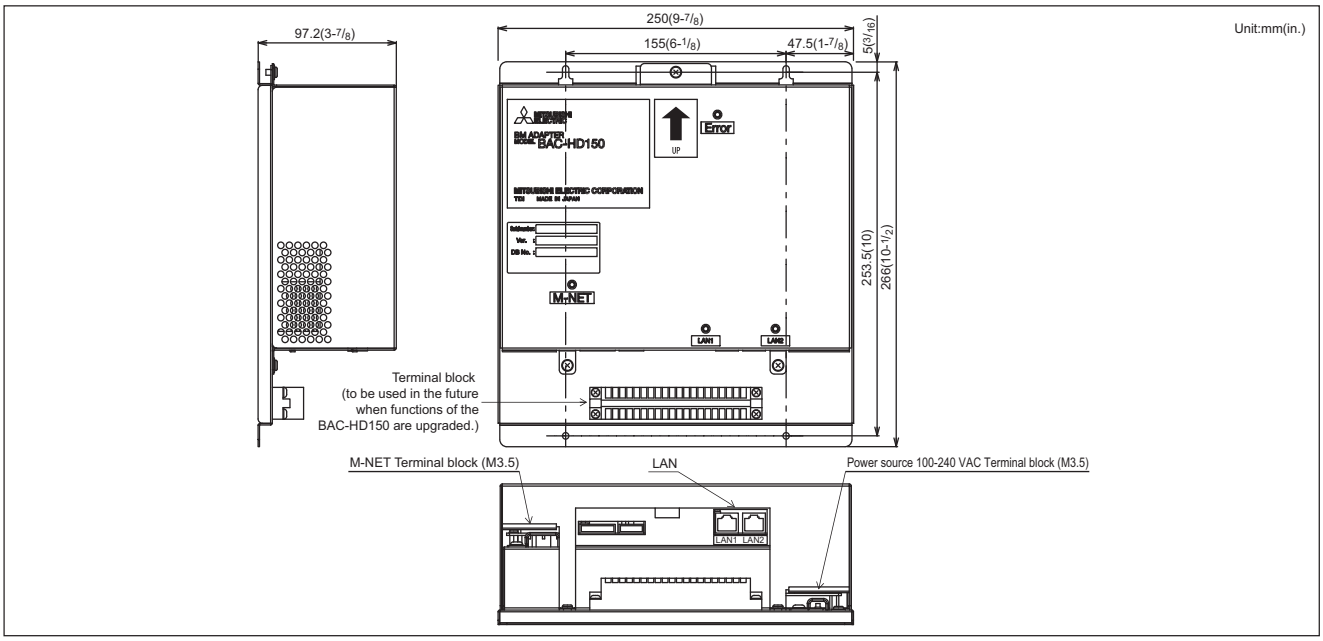

■ System example (Connection of 50 units / groups)

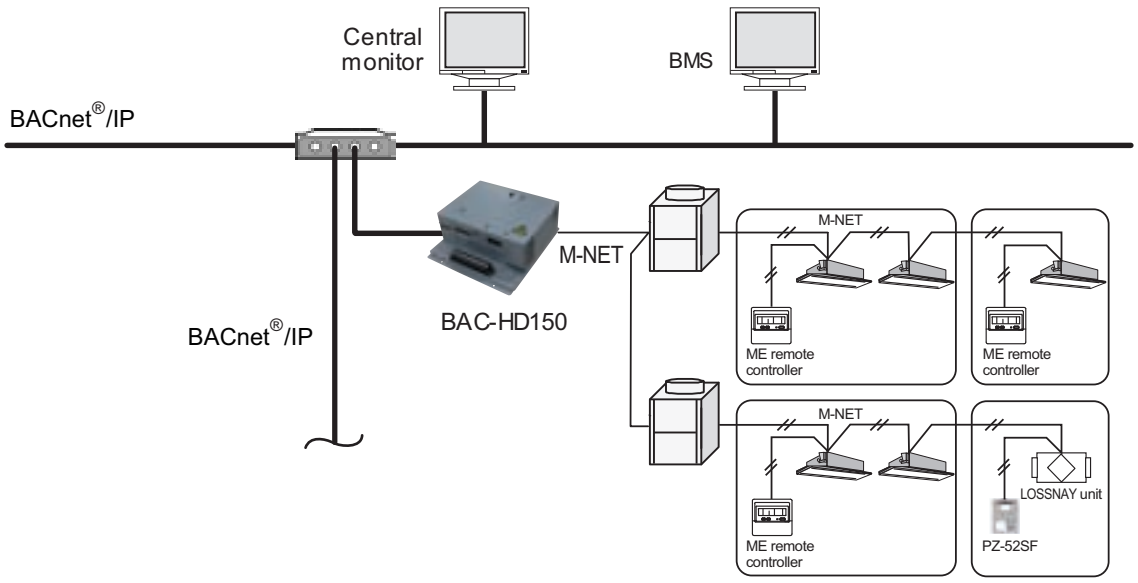

■ System example (Connection of 150 units / groups with PAC-YG50ECA)

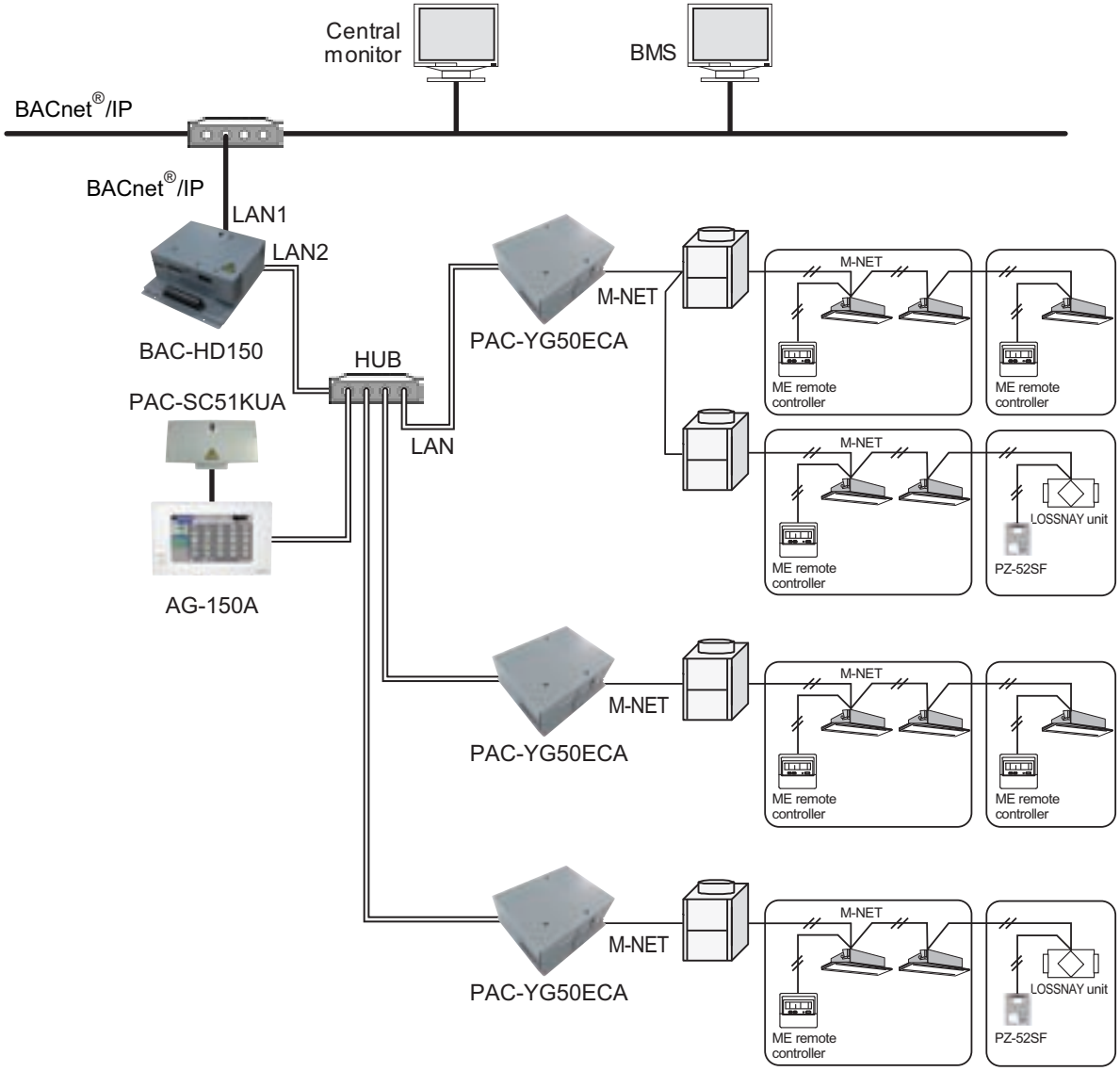

3-13. PLC software for demand input [PAC-YG41CDA]

MITSUBISHI ELECTRIC's CITY MULTI has its intelligent way to carry out peak-cut control while maximizing the air conditioning effect.

■ System example

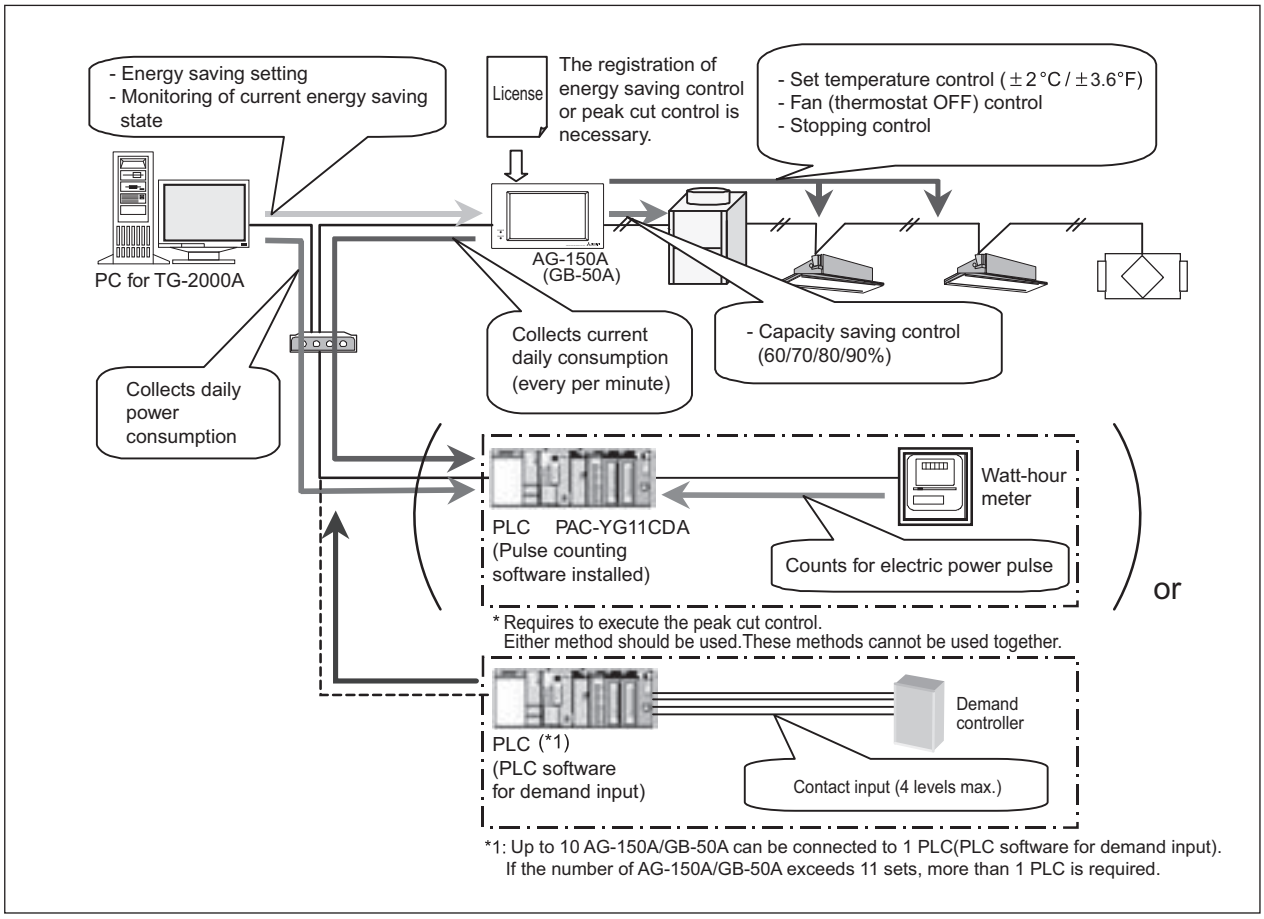

■ Necessary parts for the system

Name (Model name)	Manufacturer	Remarks
PC for central control	PC/AT convertible unit	Confirmed operation of DELL, HP. For details, refer to AG-150A Technical Manual.
TG-2000A	MITSUBISHI ELECTRIC	The latest version is recommended.
AG-150A/GB-50A	MITSUBISHI ELECTRIC	The latest version is recommended.
Energy saving control (peak cut) license	MITSUBISHI ELECTRIC	Requires for each AG-150A/GB-50A.
Web monitor license	MITSUBISHI ELECTRIC	Requires for each AG-150A/GB-50A.

Applying the energy saving setting from the integrated centralized control software TG-2000A or Initial setting Web allows conducting the energy saving control by the indoor/outdoor units or peak-cut control by using PLC.

Item		Content
Energy saving control	Indoor unit control	The TG-2000A or Initial setting Web sets the following energy saving items and energy saving time to AG-150A/GB-50A per operation block. AG-150A/GB-50A conducts energy saving operation to the indoor units with the set detail. ① Temperature control (±2°C/±36°F) ② Fan control (Thermostat ON) ③ Stopping control For the block with temperature difference between set and inlet temperature exceeding the set, the energy saving control set at level 0 is not applied.
	Outdoor unit control [2]	The TG-2000A or Initial setting Web sets the following energy saving items and energy saving time to AG-150A/GB-50A per outdoor unit and the set AG-150A/GB-50A conducts the energy saving operation for the outdoor unit.
Peak cut control	Power consumption monitoring method [3] (PAC-YG11CDA)	Connecting the watt-hour meter (PLC) or PAC-YG60MCA allows conducting energy saving operation meeting the power consumption. The control object and detail are same as that of the energy saving rotated control. One set of the watt-hour meter can be set for each AG-150A/GB-50A.
	Demand controller method [3] (PAC-YG41CDA)	Energy-saving control that is appropriate to the current demand level is performed by receiving the demand level contact signal from the demand controller using the PLC. An installation of demand input PLC software is necessary to use the PLC. Control targets and control content of this method are the same as those of the energy-saving control. Each PLC unit can control up to ten AG-150A/GB-50A units to be on the energy-saving control.
Monitoring of energy saving control status/history[1]	Control status	During the energy saving control, the energy saving mark is displayed on the air conditioner group icon of Web, TG-2000A.
	Daily report	Daily power consumption and control level can be monitored by the web, TG-2000A. AG-150A/GB-50A can hold the data for 3 days max. including that of today, yesterday and the day before yesterday.
	Monthly report	Monthly power consumption can be monitored by the integrated software TG-2000A (for 62 days max.). The integrated software monitors from PLC for display and storing.

1; Daily Report and Monthly Report are functions that are enabled only when registering the "Energy-saving peak cut control license."TG-2000A must always be kept in operation to gather data on energy-saving control status and the operation history. The auto-output CSV files in the Daily Report and Monthly Report can be saved for two years in the appropriate folders.
2; For Mr. Slim units, apply Outdoor Unit Control function only to Inverter type units.
3; For further detail, please refer to Technical Manual of Centralized Controller AG-150A/GB-50A and Integrated Centralized Control software TG-2000A.

3-14. LonWorks® interface [LMAP02-E]

CITY MULTI can easily combine into a Building Management System (BMS) via the LONWORKS® and M-NET adapter LMAP02-E. LONWORKS® is an opened transmission protocol widely used at BMS, and related equipment control. CITY MULTI is therefore compatible with large-scaled BMS management via LONWORKS®.

One LMAP02-E serves up to 50 indoor units. (CITY MULTI , Mr.Slim , and LOSSNAY.)

■ System example

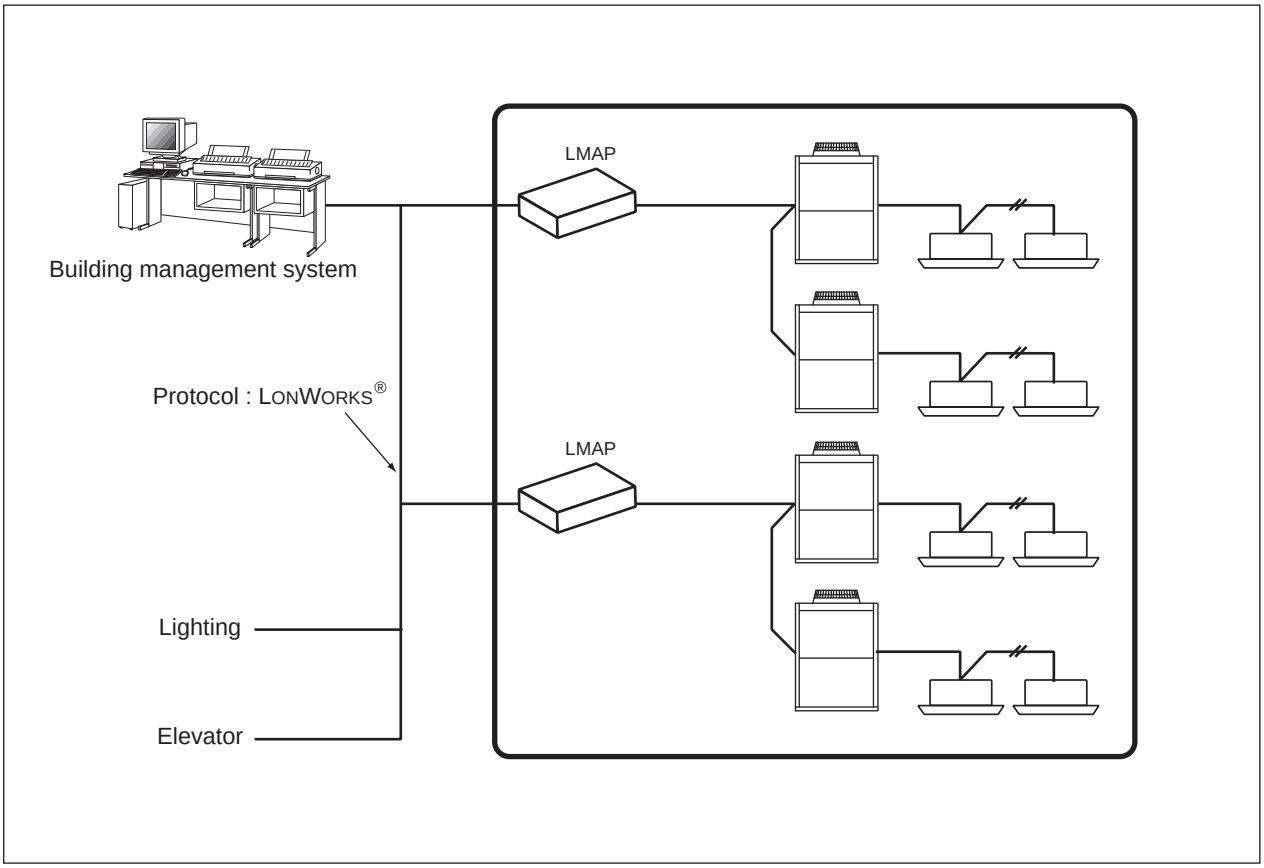

Communication items at LONWORKS® and M-NET Adapter LMAP02-E

Operation	On/Off Mode Set point from network (Set temp.) Fan speed Prohibit local On/Off Prohibit local Mode Prohibit local Set temp. Batch Off	State Monitoring	On/Off Mode Set point from network (Set temp.) Fan speed Thermo On/Off Indoor temperature Alarm signal Prohibit local On/Off Prohibit local Mode Prohibit local Set temp.

■ Environment specification

Item		Description
Connected Equipment		MITSUBISHI ELECTRIC Multiple split-type air conditioners CITY MULTI Split-type air conditioners Mr.Slim Heat recovery ventilators LOSSNAY (※For details of the connectable models,please contact the dealer.)
Number of Units		LMAP can control 50 indoor units (including LOSSNAY)
Neuron CHIP		TMPN3150 (10MHz)
Network Transceiver		FTT-10A (Free Topology 78kbps)
Performance	Average communication capacity	2.5 inputs/second
	Peak communication capacity	50 inputs/second (for one second)

※ The proper communication is not obtainable when communication intervals exceed its performance, assure sufficient intervals.
※ ACK Service is recommended for the network service.
※ Detailed specifications for the LONWORKS® network can be found in " FTT-10A Free Topology Transceiver User's Guide" by Echelon Corporation.

<LMAP02-E Network Variables>

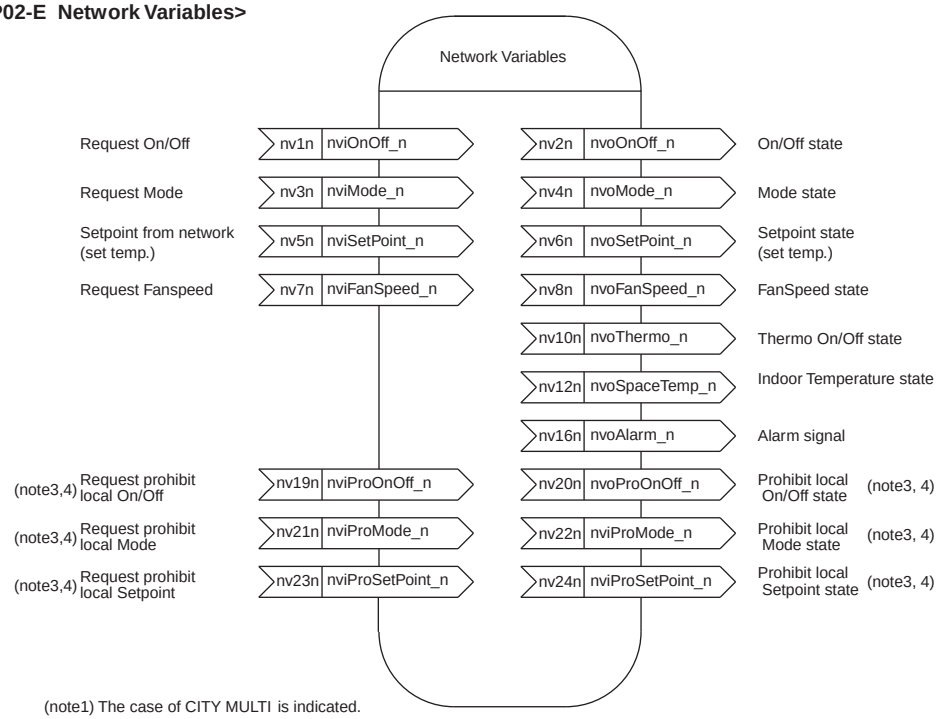

(note1) The case of CITY MULTI is indicated.
(note2) There is a case which cannot be used with the system configuration of the air conditioners units.
(note3) "n" of the network variable shows indoor unit address (M-NET).
(note4) It is possible to use when the "MA" remote controller.

■ External dimension

Unit:mm[in.]

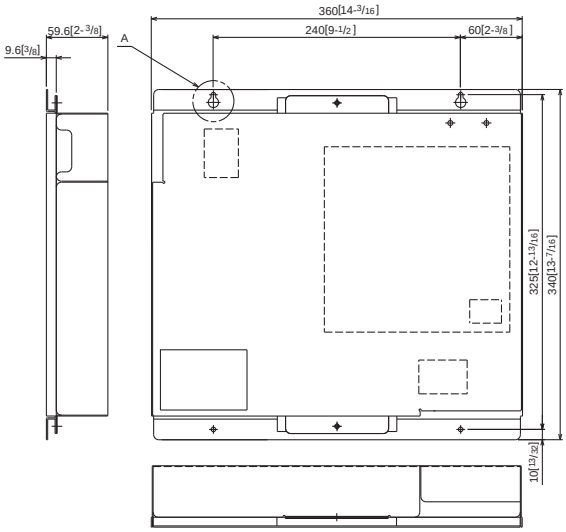

Item			Description
Dimensions			340 (H) x 360 (W) x 59.6 (D) [13-7/16(H) x 14-3/16 (W) x 2-3/8(D)]
Net Weight			3.3 kg
Power Source			~ 220 - 240V (50/60 Hz)
Current Consumption			50 mA (Maximum)
Operation Environment	Temperature	Operating Range	-15 to 43°C / 5 to 109°F
		Storage Range	-20 to 60°C / -4 to 140°F
	Humidity		30 to 95 RH (No condensation)
Installation Environment			Inside the metal control board (indoor)

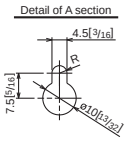

3-15. Transmission booster [PAC-SF46EPA]

The Outdoor unit supplies transmission power 30VDC for the indoor-outdoor transmission line at its connector TB3 and TB7. The power is consumed by the Indoor unit, ME remote controller, Timers and System controllers.When the total quantity of Indoor units, and ME remote controller, Timers and System controllers is over 40, or when transmission power supply is not enough, the transmission booster PAC-SF46EPA should be designed into the air-conditioner system to ensure the system communication.Indoor unit sized P200, 250 is counted as 7 units.

1. Designing PAC-SF46EPA into an air-conditioner system.

Taking the power consumption of Indoor unit sized P20-P140 as 1, the equivalent power consumption or supply of others are listed at Table 1 and Table 2.

Table 1 The equivalent power consumption by Indoor units, LOSSNAY, OA processing units, controllers

Indoor	Indoor unit	BC controller	MA RC. LOSSNAY	ME Remote Contr.	Timers, System Contr.		ON/OFF Contr.	MN Converter	
Sized P20-P140	Sized P200,P250	CMB	PAR-21MAA PAC-YT51CRA(B) PAR-FA32MA LGH-RX-E PZ-60DR-E	PAR-F27MEA PZ-52SF	PAC-SF44SRA PAC-YT34STA AG-150A	GB-50A	PAC-YT40ANRA	CMS -MNF-B	CMS -MNG-E
1	7	2	0	1/4	1/2	3	1	1/2	2

*RC : Remote Controller

Table 2 The equivalent power supply of Trans. Booster, Power supply unit, Connector TB3, TB7 of Outdoor unit.

Transmission Booster	Power supply unit	Expansion controller	BM ADAPTER	Outdoor unit	Outdoor unit
PAC-SF46EPA	PAC-SC51KUA	PAC-YG50ECA	BAC-HD150	Connector TB3 and TB7 total *	Connector TB7 only
25	5	6	6	32	6

*If PAC-SC51KUA is used to supply power at TB7 side, no power supply need from Outdoor unit at TB7, Connector TB3 itself will therefore have 32.

Transmission booster PAC-SF46EPA has equivalent transmission power 25.

With the equivalent power consumption values in Table 1 and Table 2, PAC-SF46EPA can be designed into the airconditioner system to ensure proper system communication according to A, B, C.

(A) Firstly, count from TB3 at TB3 side the total quantity of Indoor units, OA process units and ME remote controller, Timers and System controllers.If the total quantity reaches 40, a PAC-SF46EPA should be set.In this case, Indoor unit sized P200, 250 is counted as 7 Indoor units, but MA remote controller(s), LOSSNAY is NOT counted.

(B) Secondly, count from TB7 side to TB3 side the total transmission power consumption. If the total power consumption reaches 32, a PAC-SF46EPA should be set.Yet, if a PAC-SC51KUA is used to supply power at TB7 side, count from TB3 side only.

(C) Thirdly, count from TB7 at TB7 side the total transmission power consumption, If the total power consumption reaches 6, a PAC-SF46EPA should be set.

■ External dimension

Unit:mm [in.]

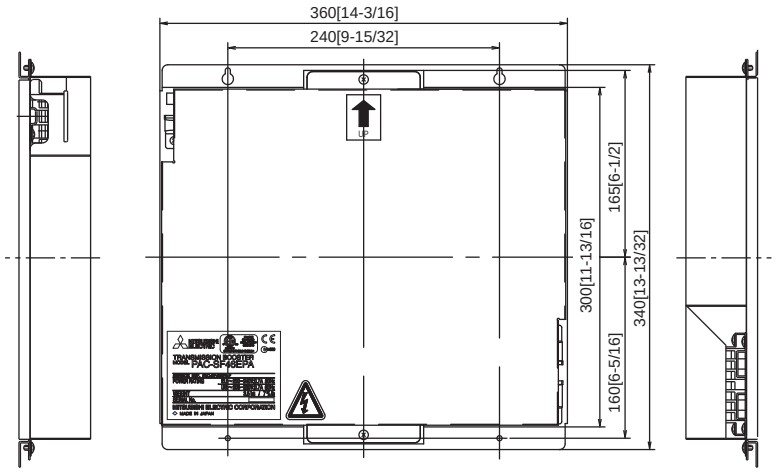

3-16. PI controller [PAC-YG60MCA]

The PI controller counts pulses from a power meter, gas meter, water meter, and calorimeter. Combining the use of the AG-150A/GB-50A and TG-2000A allows for calculating the charges for each unit and performing peak-cut (e.g., demand control) operation.
The meters can be monitored from AG-150A/GB-50A web browser. They cannot be monitored on AG-150A LCD.

■External Dimensions

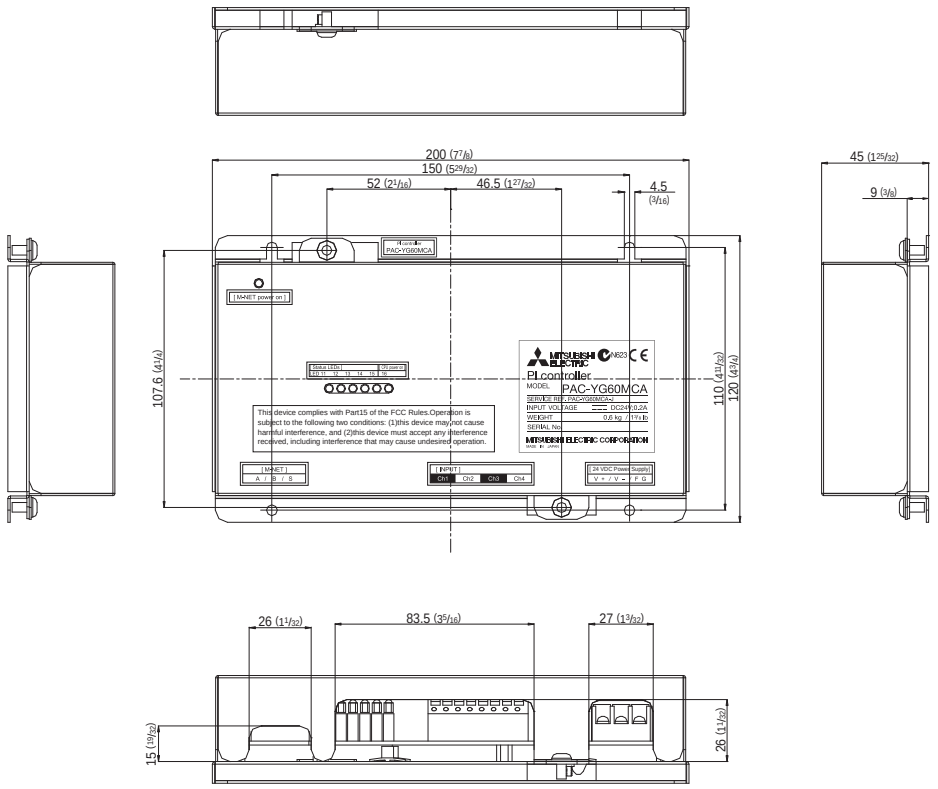

Unit: mm (in)

⚠CAUTION	Usage Restrictions • Mitsubishi Electric does not take financial responsibility for damages caused by issues beyond our control or special circumstances (predicable or unpredictable); and secondary or accidental damages, and damages to other objects. We also do not take financial responsibility for opportunities lost as a result of device failure, or electrical power failure at the end-user site. Mitsubishi Electric does not take financial responsibility caused by end-users' requests including, but not limited to, device testing, startup, readjustment, and replacement. • Because the PI controller only counts pulses, accuracy and performance of pulse conversion depend on the meter. Mitsubishi Electric does not take financial responsibility for damages caused by issues beyond our control or special circumstances (predicable or unpredictable); and secondary or accidental damages and damages to other object. • Depending on each country's laws and regulations, etc., there may be cases these measured charges cannot be used for certificate of transaction.

1. Specifications

(1). Device Specifications

Item	Rating and Specification		
Power Supply	24 VDC ±10%: 5 W		Screw terminal block (M3) (*3)
Interface	M-NET communication	17 to 30 VDC (*1)	Screw terminal block (M3) (*3)
	Non-voltage a-contact input	Number of contacts: 4 Pulse signal: a-contact Pulse width: 100 ms to 300 ms (Idle period until next pulse: 100 ms or more) 100 ms or more 100 ms ~ 300 ms Rated voltage: 24 VDC Rated current: 1 mA or less (*2)	Screwless terminal block
Environment Conditions	Temperature	Operating temperature range	0 to 40°C [32°F to 104°F]
		Storage temperature range	-20 to 60°C [-4°F to 140°F]
	Humidity	30 to 90%RH (no condensation)	
Dimensions	200 (W) × 120 (H) × 45 (D) mm / 7 7/8 (W) × 4 3/4 (H) × 1 25/32 (D) in		
Weight	0.6 kg / 1 3/8 lb		
Time Backup During Power Failure	In the event of power failure or shut-off, the internal capacitor will continue to track time for approximately one week. (The internal capacitor takes about 24 hours to fully charge; a replacement battery is not necessary.)		
Installation Environment	Inside the metal control board (indoors) * Use this product in a hotel, a business office environment or similar environment.		

*1: Supply electric power from a power unit for the transmission line or an outdoor unit. Furthermore, the power consumption factor of the M-NET circuitry of this device is "1/4" (equivalent to one ME Remote Controller).
*2: Supply electric power from the main unit to the contacts of the meters.
*3: M3 is the size of the screw on the terminal block (ISO metric screw thread). The number indicates the screw diameter (mm).

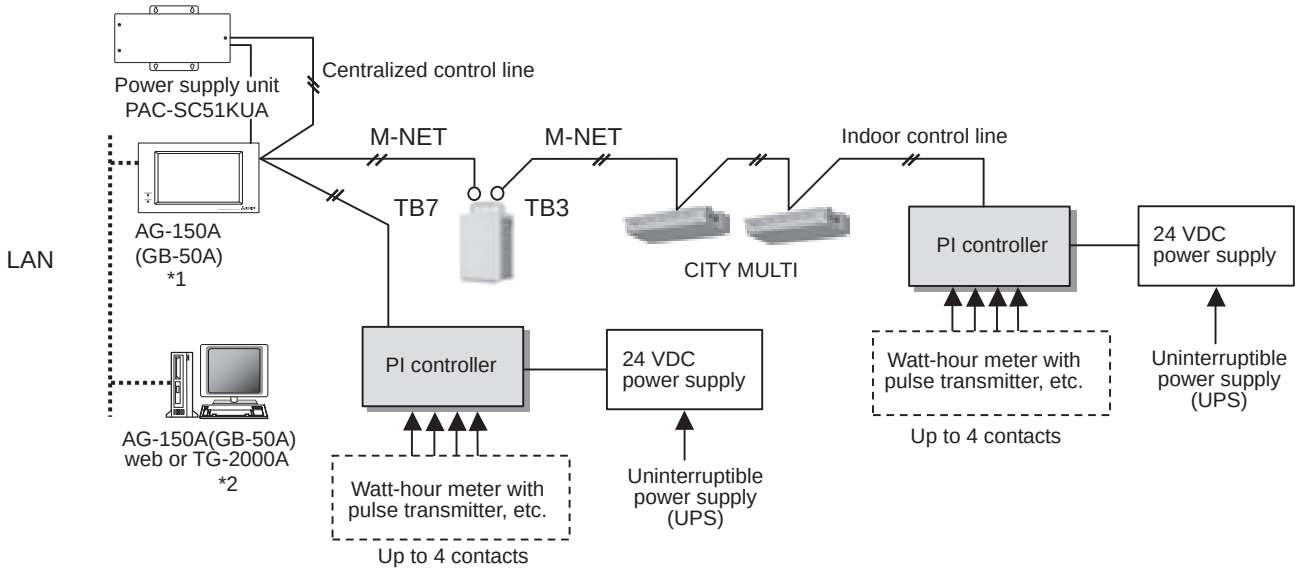

*This figure omits the power supply line and only shows the transmission line.

<Restrictions>
Maximum of 5 units (total of 20 channels) per AG-150A/GB-50A
However, the number of units that can be connected to a AG-150A/GB-50A is up to 50 including this device, indoor units, LOSSNAY units, etc.
*1: The PI controller can be connected to GB-50A with Ver.3.22 or later. (The use of the latest version is recommended.)
*2: The PI controller can be connected to TG-2000A with Ver.5.60/5.30 or later. (The use of the latest version is recommended.)

NOTE	• For the shield ground of the M-NET centralized control line for central control, use single-point grounding at the power unit for the transmission line. However, when supplying electric power to the M-NET centralized control line from the R410A series outdoor unit*1 without using a power supply unit for the transmission line, use single-point grounding at the TB7 of that outdoor unit. *1 : Except PUMY model. Furthermore, when connecting this device to the M-NET indoor control line, use grounding at the TB3 for each outdoor unit system. • Connecting an Uninterruptible power supply (UPS) to the 24 VDC power supply is recommended in order to prevent the loss of pulse data in the event of a power failure. If a UPS cannot be connected, try to make the AC power supply to the 24 VDC power supply as much same as the AC power supply line to the meters. • This device does not support level meters. To use a level meter, incorporate a Converter circuit externally and convert to pulse input. • If the M-NET transmission line of this device is connected to an M-NET indoor control line and the outdoor unit is down because, for example, the power supply is interrupted for servicing or there is a failure, the PI controller cannot be controlled from the system controller.

(2). Parts Purchased Separately

Prepare the following parts to install this device.

Required Part	Specification
Unit fixing screws	M4 screw × 4 (* M4: ISO metric screw thread)
Power supply for this device	Power source: 24 VDC 0.2 A (Minimum loading), SELV circuit, power line with grounding terminal Ripple noise: Lower than 200 mVp-p Compatible specification Authorized or CE marked products Subject to regulations: - IEC60950 (or EN60950) - CISPR22/24 (or EN55022/24) - IEC61000-3-2/3-3 (or EN61000-3-2/3-3)
Power line	Use a sheathed vinyl cord or cable. At least 0.75 mm^2 (AWG18)
M-NET transmission line	Type of the cable: Sheathed vinyl cords or cable which comply with the following specifications or equivalent. • CPEV ø1.2 mm to ø1.6 mm • CVVS 1.25 mm^2 to 2 mm^2 (AWG16 to 14) * CPEV: PE insulated PVC jacketed shielded communication cable * CVVS: PVC insulated PVC jacketed shielded control cable PE: Polyethylene PVC: Polyvinyl choloride Power needs to be supplied to the M-NET circuitry of this device. Use an outdoor unit or a separately purchased power supply unit for the transmission line.
Signal lines	Shows the size of the electric wire (copper wire) that is adapted to the terminal block of this device. Electric wire size..... (1) Solid wire: ø0.65 mm (AWG21) - ø1.2 mm (AWG16) (2) Stranded wire: 0.75 mm^2 (AWG18) - 1.25 mm^2 (AWG16) Single strand: At least ø0.18 mm

[Parts to be Purchased Separately]

Name	Model	Application	Remark
Power supply unit	PAC-SC51KUA	Power supply to the M-NET transmission line	This is not required when power is to be supplied from an outdoor unit.

[Commercially available parts]

Part	Use	Remark
External 24 VDC power source	Supplies power to the PI controller.	Refer to "Power supply for this device" in "Required Part" above for the capacity of the power supply.

[Recommended Pulse Specifications]

Prepare a measuring instrument that measures the type of pulse signals indicated in table below.

Type	Specification
Output pulse relay method	Semiconductor relay method
Output pulse width	100 ~ 300 ms (100 ms and above) Choose an instrument that outputs non-voltage a-contact point pulse per each pulse output. 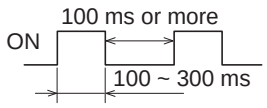
Pulse unit	Watt-hour meter: 0.1 kWh/pulse, 1 kWh/pulse recommended Water meter: m^3/pulse Gas meter: m^3/pulse Calorimeter: MJ/pulse * Except for the watt-hour meter, select instruments that take measurements in the appropriate pulse unit.

2. Wiring Instructions

(1). Connecting the Power and M-NET Transmission Lines

Tightening torque for terminal screws: 1 N·m

Connect the M-NET transmission line of this device to a power supply unit (PAC-SC51KUA) for the transmission line or an outdoor unit (either a centralized control line or indoor control line can be connected).
* Only the M-NET circuitry of this device receives the power from the M-NET transmission line. The power consumption factor is "1/4" (equivalent to one ME Remote Controller).

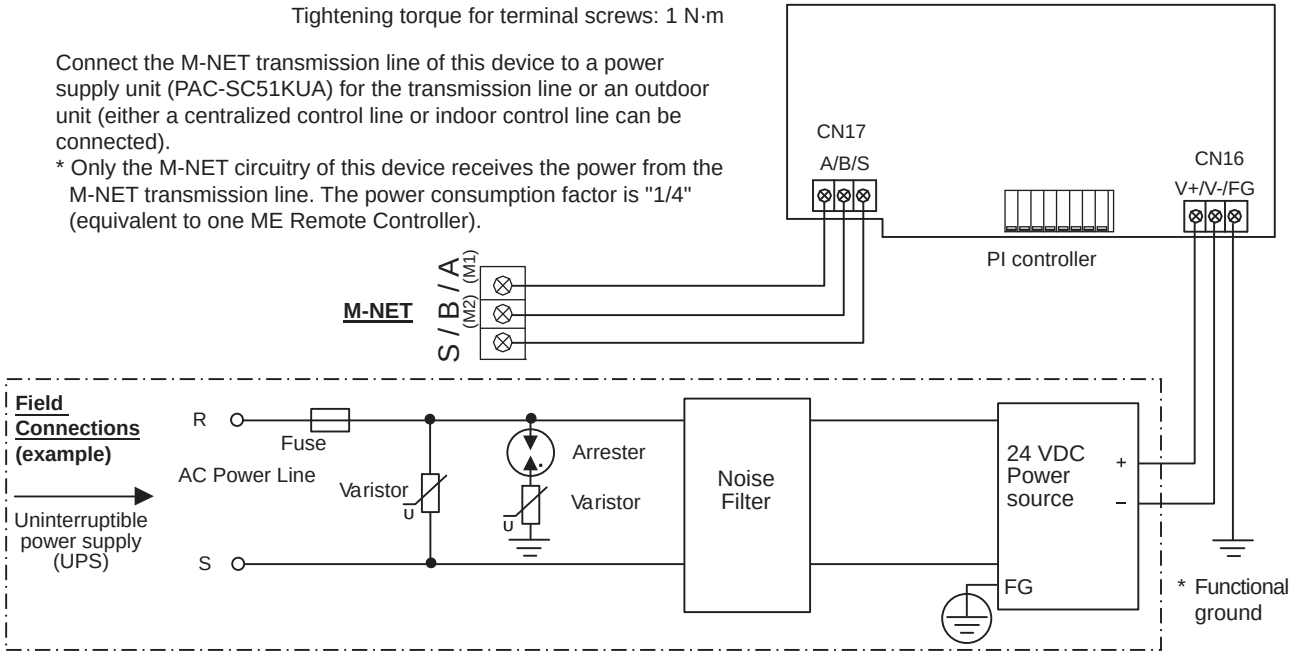

⚠CAUTION	• Use a power line and M-NET transmission line that satisfy the specifications described in "1-(2). Parts Purchased Separately". • Attach a circuit comprising the following components to the supply primary side of the 24 VDC power supply. (1) Varistor, (2) Arrester, (3) Noise filter, (4) Fuse • It is important to pay attention to the polarity when connecting to the 24 VDC power supply terminal block. Connecting the positive and negative in the reverse order will cause a failure. • Fix the power line and M-NET transmission line in place on the outside to ensure that the terminal block is not affected by any external force. Not securely connecting and fixing the wires in place may cause heat generation and fire. • Make sure that the copper wiring is not short-circuiting the plates (cover, lower case) or neighboring wires. Cover the shielded line of the M-NET transmission line with materials such as vinyl tape and prevent short-circuiting with the plates.

(2). Connecting the Signal Lines

• Separately procure items such as terminal blocks and cables locally.
• The maximum wire length is 100 m (328 ft).
However, since the use of long wires makes the device susceptible to noise, using wires shorter than 10 m (32.8 ft) is recommended.

1) Pulse input (non-voltage a-contact)

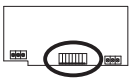

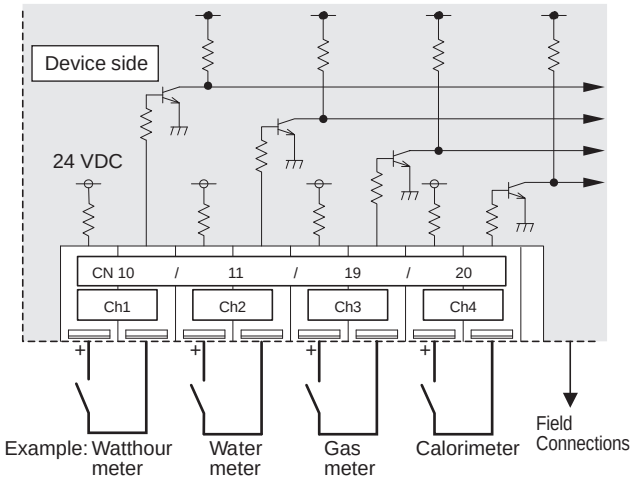

NOTE	• The pulse unit (weight) can be added to each of the inputs of channels 1 to 4. • Be sure to set the pulse unit (weight) settings from a system controller (AG-150A/GB-50A or TG-2000A). If the pulse unit (weight) value has not been set as required, the charge function and peak cut control will not work normally because correct measurement of usage amounts will not be made. • This device does not support level meters. To use a level meter, incorporate a Converter circuit externally and convert to pulse input.

⚠ **CAUTION**	• The polarity of the input terminals is important, so be sure to match the polarity when using contacts that have polarity. • Select a contact with a minimum applicable load of 1 mA or less. • Supply 24 VDC 1 mA from the positive terminal to the contacts of the meters. • The pulse unit of the watt-hour meter being used should be 1 kWh/pulse or less. Note that the apportioning error will increase if a watt-hour meter with large pulse unit is used. • The input signal line should not come into contact with or be installed alongside the M-NET transmission line and power supply line. Care must also be taken to avoid wiring loops. • Strip 12±1 mm (15/32 ± 1/32 in) of the wire coating and insert firmly into the terminal. • Make sure that the copper wiring is not short-circuiting the plates (cover, lower case) or neighboring wires. • Perform wiring so that the terminal block is not strained. If strained, use a wire guide or junction terminal to alleviate the stress on the terminal block.

3. System Operation Test

Various settings related to the charge operation need to be configured from the TG-2000A prior to starting the charge function operation. Furthermore, in such a case, be sure to perform a charge test run according to the instruction manual for TG-2000A.

Do not turn the power OFF after starting operation. The power rate will not be counted while the power interruption.
Forcible pulse input must never be carried out after startup.

3-17. DIDO controller [PAC-YG66DCA]

The DIDO controller is used in combination with a AG-150A/GB-50A to operate general-purpose equipment, as well as to monitor operating and error status. It is equipped with two sets of standard terminals (Channels 1 and 2), and four sets of expansion connectors for the input/output terminals. Expansion cable is optional.
Other devices can only be controlled from AG-150A/GB-50A Web browser and TG-2000A. Operation can be monitored or performed from the AG-150A LCD.
In addition, this device includes a function that interlocks M-NET devices such as indoor units, general equipment, etc.

■External Dimensions

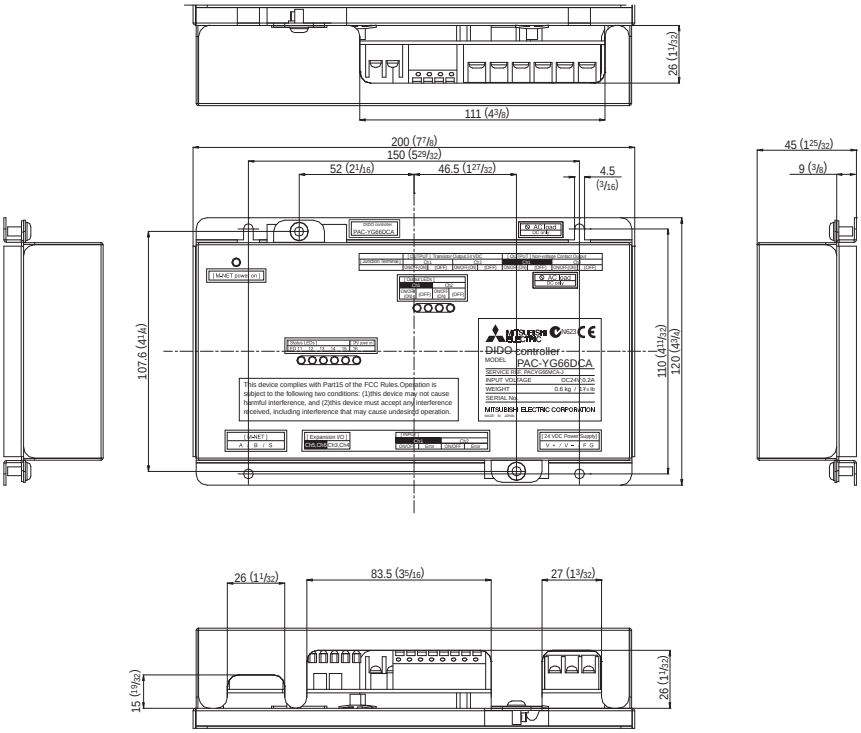

Unit: mm (in)

⚠CAUTION	Usage Restrictions • Mitsubishi Electric does not take financial responsibility for damages caused by issues beyond our control or special circumstances (predicable or unpredictable); and secondary or accidental damages, and damages to other objects. We also do not take financial responsibility for opportunities lost as a result of device failure, or electrical power failure at the end-user site. Mitsubishi Electric does not take financial responsibility caused by end-users' requests including, but not limited to, device testing, startup, readjustment, and replacement. • Do not use this device in disaster prevention, security, or "critical to life" applications. • It is recommended to provide an external switch for general-purpose equipment in case of a failure of the DIDO controller or a peripheral part.

1. Specifications

(1). Device Specifications

Item	Rating and Specification					
Power Supply	24 VDC ±10%: 5 W (*1)					Screw terminal block (M3) (*8)
Interface	M-NET communication			17 to 30 VDC (*2)		Screw terminal block (M3) (*8)
	Standard	Output (*3)	ON/OFF, (ON) (*4)	Non-voltage Relay contact (2)	Applied load MAX: 24 VDC, 5 W MIN: 5 VDC, 2 mW * AC loads cannot be connected.	Screw terminal block (M3.5) (*8)
				Transistor (2)	24 VDC 40 mA or less (*5)	Screwless terminal block
			(OFF) (*4)	Non-voltage Relay contact (2)	Applied load MAX: 24 VDC, 5 W MIN: 5 VDC, 2 mW * AC loads cannot be connected.	Screw terminal block (M3.5) (*8)
				Transistor (2)	24 VDC 40 mA or less (*5)	Screwless terminal block
		Input	ON/OFF	Non-voltage a contact (2 each)	24 VDC 1 mA or less (*6)	Screwless terminal block
			Error/Normal			
	Expansion	Output	ON/OFF, (ON) (*4)	Transistor (4 each)	24 VDC 40 mA or less (*5)	9 pin connector
			(OFF) (*4)			
		Input	ON/OFF	24 VDC input (4 each)	24 VDC 1 mA or less (*7)	9 pin connector
			Error/Normal			
	Output Pulse Width			1s ± 30 ms	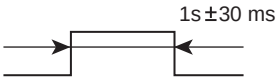	
Interlock Function	Interlock M-NET devices and output contacts according to status of input contacts. (*8)					
Environment Conditions	Temperature			Operating temperature range	0 to 40°C[32°F to 104°F]	
				Storage temperature range	-20 to 60°C[-4°F to 140°F]	
	Humidity			30 to 90%RH (no condensation)		
Dimensions	200 (W) × 120 (H) × 45 (D) mm / 7 7/8 (W) × 4 3/4 (H) × 1 25/32 (D) in					
Weight	0.6 kg / 1 3/8 lb					
Time Backup During Power Failure	In the event of power failure or shut-off, the internal capacitor will continue to track time for approximately one week. (The internal capacitor takes about 24 hours to fully charge; a replacement battery is not necessary.)					
Installation Environment	Inside the metal control board (indoors) * Use this product in a hotel, a business office environment or similar environment.					

*1: For details, refer to "1-(2). Parts Purchased Separately".
*2: Supply electric power from a power unit for the transmission line or an outdoor unit.
Furthermore, the power consumption factor of the M-NET circuitry of this device is "1/4" (equivalent to one ME Remote Controller).
*3: Non-voltage Relay contact or transistor is available for output. Only one can be used at a time.
*4: ( ) is in the case of a pulse.
*5: The output is open collector type. Power must be supplied from an external power source to the output circuit of this device.
*6: Power is supplied from this device to the external contacts.
*7: Power must be supplied from an external power source.
*8: M3 and M3.5 are sizes of the screw on the terminal block (ISO metric screw thread).
The number indicates the screw diameter (mm).

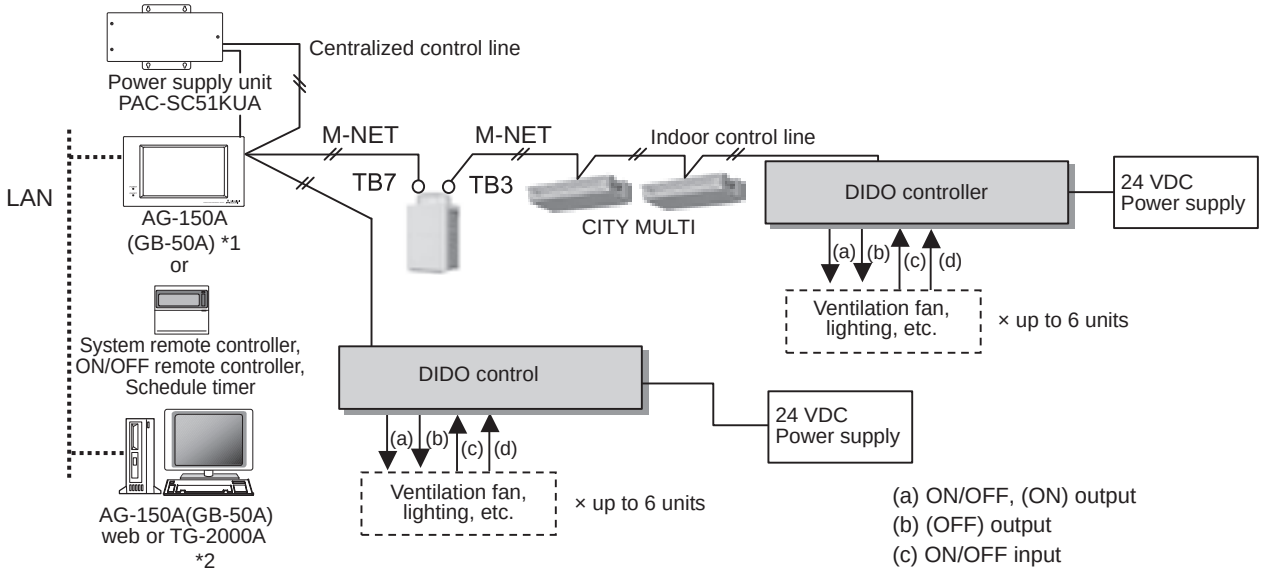

(a) ON/OFF, (ON) output
(b) (OFF) output
(c) ON/OFF input
(d) Error/Normal input
Standard: Terminal block (for 2 units)
Expansion: Connectors (for 4 units)
Total: 6 units

* This figure omits the power supply line and only shows the transmission line.

*1: The DIDO controller can be connected to GB-50A with Ver.3.22 or later.
*2: The DIDO controller can be connected to TG-2000A with Ver.5.60/5.30 or later.

<Restrictions>
Maximum of 50 units (50 channels) per AG-150A/GB-50A
However, the number of units that can be connected to a AG-150A/GB-50A is up to 50 including the number of contacts used on this device, an indoor unit, LOSSNAY unit, etc.
Up to 6 contacts can be connected to the DIDO controller (1 M-NET address). One contact connected to this device is calculated as the equivalent of one indoor unit connected to AG-150A/GB-50A.
For example, 5 contacts connected to the DIDO controller are calculated as the equivalent of 5 indoor units connected to AG-150A/GB-50A.

NOTE

- For the shield ground of the M-NET centralized control line, use single-point grounding at the power unit for the transmission line.
  However, when supplying electric power to the M-NET centralized control line from the R410A series outdoor unit*1 without using a power supply unit for the transmission line, use single-point grounding at the TB7 of that outdoor unit. *1 : Except PUMY model.
  Furthermore, when connecting this device to the M-NET indoor control line, use grounding at the TB3 for each outdoor unit system.
- If the M-NET transmission line of this device is connected to the M-NET indoor control line and the outdoor unit is down because, for example, the power supply is interrupted for servicing or there is a failure, the DIDO controller cannot be controlled from the system controller.
- Controlling the system remote controller, ON/OFF remote controller, and schedule timer is only possible with channel 1 of a standard terminal block.
- DIDO controller can only be monitored or performed from AG-150A LCD, AG-150A/GB-50A Web browser and TG-2000A.
- When AG-150A/GB-50A is connected, monitoring control can only be performed from AG-150A,GB-50A Web or TG-2000A. Monitoring control cannot be performed from the system remote controller, ON/OFF remote controller or schedule timer.

(2). Parts Purchased Separately

Prepare the following parts to install this device.

Required Part	Specification
Unit fixing screws	M4 screw × 4 (*M4: ISO metric screw thread)
Power supply for this device	Commercially available power source: 24 VDC±10% 0.2 A (Minimum loading), SELV circuit, power line with grounding terminal Ripple noise: Lower than 200 mVp-p Compatible specification Authorized or CE marked products Subject to regulations: - IEC60950 (or EN60950) - CISPR22/24 (or EN55022/24) - IEC61000-3-2/3-3 (or EN61000-3-2/3-3) When using transistor output (including extension output) for the 24 VDC output of this device, increase the capacity to match the number used. • 1 set used: 0.3 ADC (Minimum) • 2 sets used: 0.4 ADC (Minimum) • 3 sets used: 0.5 ADC (Minimum) • 4 sets used: 0.6 ADC (Minimum) • 5 sets used: 0.7 ADC (Minimum) • 6 sets used: 0.8 ADC (Minimum) * The increase of the power supply capacity is 0.1 ADC for every set.
Power line	Use a sheathed vinyl cord or cable. At least 0.75 mm^2 (AWG18)
M-NET transmission line	Type of the cable: Sheathed vinyl cords or cable which comply with the following specifications or equivalent. • CPEV ø1.2 mm to ø1.6 mm • CVVS 1.25 mm^2 to 2 mm^2 (AWG 16 to 14) * CPEV: PE insulated PVC jacketed shielded communication cable * CVVS: PVC insulated PVC jacketed shielded control cable PE: Polyethylene PVC: Polyvinyl choloride Power needs to be supplied to the M-NET circuitry of this device. Use an outdoor unit or a separately purchased power supply unit for the transmission line.
Signal lines	Use electric wire of an appropriate size for the terminal block of this device. Electric wire size ···· (1) Solid wire: ø0.65 mm (AWG21) - ø1.2 mm (AWG16) (2) Stranded wire: 0.75 mm^2 (AWG18) - 1.25 mm^2 (AWG16) Single strand: At least ø0.18 mm To use an expansion input/output, use a separately purchased external input/output adapter.

[Parts to be Purchased Separately]

Name	Model	Application	Remark
Power supply unit	PAC-SC51KUA	Power supply to the M-NET transmission line	This is not required when power is to be supplied from an outdoor unit.
External I/O adapter	PAC-YG10HA	Connection adapter for using an expansion input/output	This is required when an expansion input/output is used.

[Commercially available parts]

Name	Application	Remark
External 24 VDC power source	Supplies power when to use the DIDO controller or transistor output.	Refer to "Power supply for this device" in "Required Part" above for the power supply capacity.
Relay device	Requires commercially available relay device depending on the electric specifications with an external device.	

2. Wiring Instructions

(1). Connecting the Power and M-NET Transmission Lines

Tightening torque for terminal screws: 1 N·m

Connect the M-NET transmission line of this device to a power supply unit (PAC-SC51KUA) for the M-NET transmission line or an outdoor unit (either a centralized control line or indoor control line can be connected).
* Only the M-NET circuitry of this device receives the power from the M-NET transmission line. The power consumption factor is "1/4" (equivalent to one ME Remote Controller).

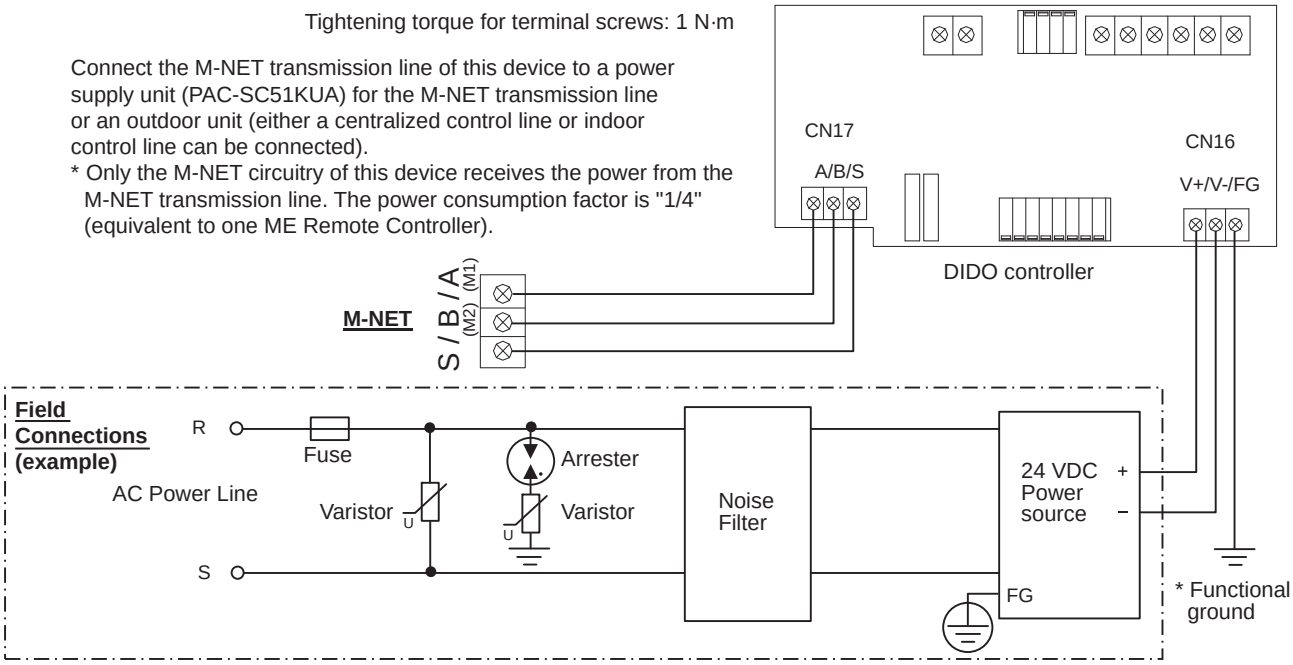

⚠CAUTION	• Use a power line and M-NET transmission line that satisfy the specifications described in "1-(2). Parts Purchased Separately". • Attach a circuit comprising the following components to the supply primary side of the 24 VDC power supply. (1) Varistor, (2) Arrester, (3) Noise filter, (4) Fuse • It is important to pay attention to the polarity when connecting to the 24 VDC power supply terminal block. Connecting the positive and negative in the reverse order will cause a failure. • Fix the power line and M-NET transmission line in place on the outside to ensure that the terminal block is not affected by any external force. Not securely connecting and fixing the wires in place may cause heat generation and fire. • Make sure that the copper wiring is not short-circuiting the plates (cover, lower case) or neighboring wires. Cover the shielded line of the M-NET transmission line with materials such as vinyl tape and prevent short-circuiting with the plates.

(2). Connecting the Signal Lines

- Separately procure the relay, power supply for the relay, terminal block, and cable locally.
- The maximum wire length is 100 m (328 ft). However, since the use of long wires makes the device susceptible to noise, using wires shorter than 10 m (32.8 ft) is recommended.
- Connect another relay within 10 m (32.8 ft) from DIDO controller to extend the input line.

1) Standard Terminals (Channels 1 and 2)

(1-1) Input

(a) Non-voltage a-contact Inputs

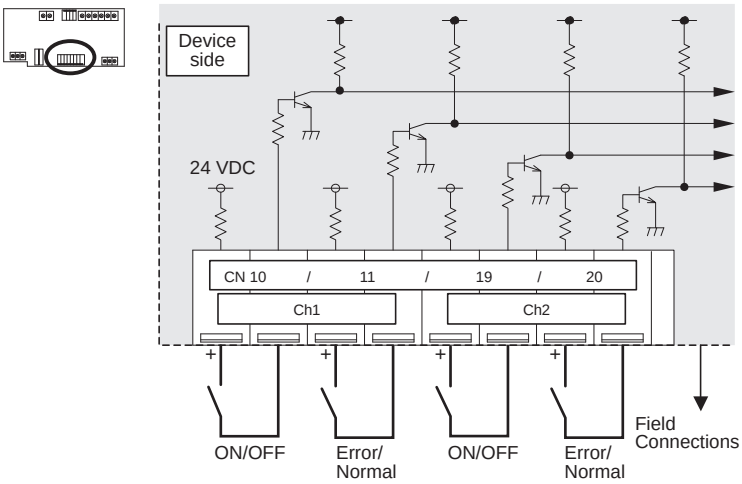

Contacts closed :
Operating (ON); detected an error
Contacts closed :
Operating (ON); detected an error
*Error/normal detection becomes inverted from contact open/closed logic for a b-contact setting.

NOTE	• Connect the operate/stop (ON/OFF) inputs so that closing the contact operates (ON) the device and opening the contact stops (OFF) the device. • The error/normal inputs of channels 1 and 2 can be switched between a-contact and b-contact.

⚠**CAUTION**	• The polarity of the input terminals is important, so be sure to match the polarity when using contacts that have polarity. • Select a contact with a minimum applicable load of 1 mADC or less. • Supply 24 VDC 1 mA from the positive terminal to the external contacts. • Do not install alongside or in contact with other wires. • Strip 12 ±1 mm (15/32 ± 1/32 in) of the wire coating and insert firmly into the terminal. • Make sure that the copper wiring is not short-circuiting the plates (cover, lower case) or neighboring wires. • Perform wiring so that the terminal block is not strained. If strained, use a wire guide or junction terminal to alleviate the stress on the terminal block.

(1-2) Output

Non-voltage Relay contact or transistor is available for output. Only one can be used at a time.

(a) Non-voltage Relay Contact Outputs

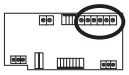

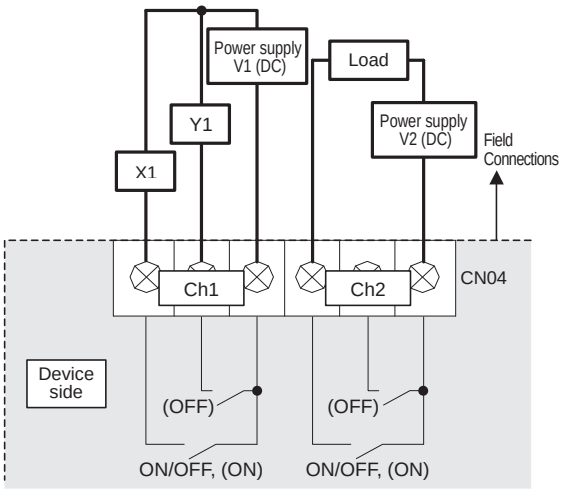

Operate (ON) output :
Contacts closed
Stop (OFF) output :
Contacts open
*Upon pulse output, the (ON), (OFF) contacts close according to the output content. ((ON) and (OFF) refer to the junctions in the diagram.)

( ) is in the case of a pulse.

Tightening torque for terminal screws: 1 N·m

⚠CAUTION

- To use X1 and Y1 relay, obtain one that satisfies the following specifications.
  Operating coil
  [Applied load]
  MAX: 24 VDC, 5 W (Built-in diode)
  MIN: 5 VDC, 2 mW (Built-in diode)
  *1 AC loads cannot be connected.
  *2 Provide a power supply (V1, V2) that matches the load and relay to be used.
- To drive a direct load, use ones within the following.
  [Applied load]
  MAX: 24 VDC, 5 W
  MIN: 5 VDC, 2 mW

* AC loads cannot be connected.

- Make sure that the copper wiring is not short-circuiting the plates (cover, lower case) or neighboring wires.
- Perform wiring so that the terminal block is not strained.
  If strained, use a wire guide or junction terminal to alleviate the stress on the terminal block.
- Do not connect the wires directly from the top of the control panel to the terminal block.
  Moisture may enter this device along the wiring and cause electric shock or fire.

(b) Transistor Outputs (Open Collector)

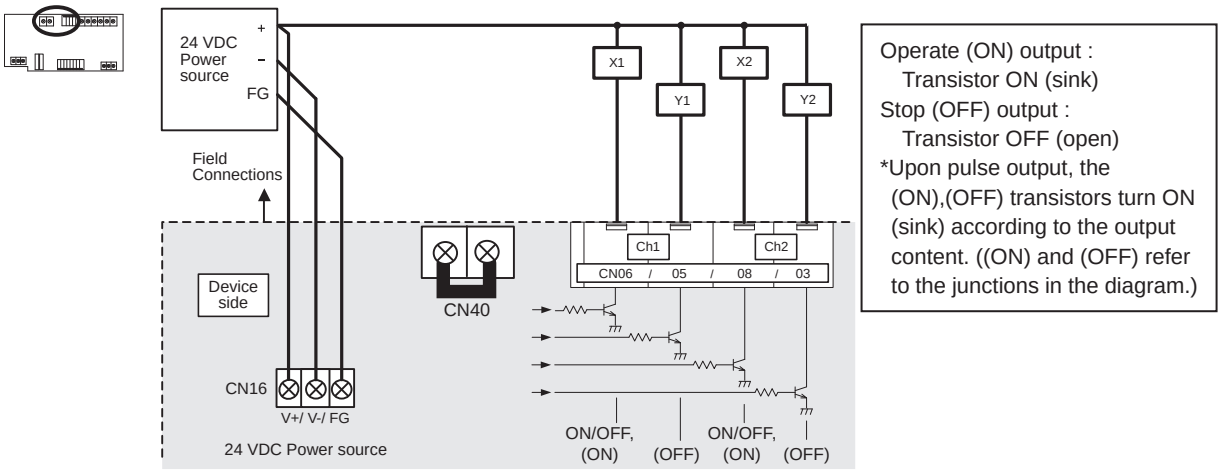

( ) is in the case of a pulse.

Tightening torque for terminal screws: 1 N·m

NOTE	The junction terminal block CN40 (for 24 VDC) is provided. Use them as relay terminals if necessary.

⚠**CAUTION**	• When X1, X2, Y1 and Y2 relays are used, select ones that satisfy the following specifications. Operating coil Rated voltage: 24 VDC (Built-in diode) Power consumption: 0.9 W or less (*1) Be sure to use the ones with the voltages rated above. Exceeding the rated voltage may affect the ON/OFF of other outputs. (*2) When using a separate power supply for this device, connect GND of the power supply to V- of CN16 of the terminal block of this device. (*3) Use a relay with a withstanding voltage of at least 2000 VAC between the coil and contact. Otherwise, there is the likelihood of an electric shock or fire. • Strip 12 ±1 mm (15/32 ±1/32 in) of the wire coating and insert firmly into the terminal. • Make sure that the copper wiring is not short-circuiting the plates (cover, lower case) or neighboring wires. • Perform wiring so that the terminal block is not strained. If strained, use a wire guide or junction terminal to alleviate the stress on the terminal block. • Do not connect the wires directly from the top of the control panel to the terminal block. Moisture may enter this device along the wiring and cause electric shock or fire.

2) Expansion Connectors (Channels 3 to 6)

(2-1) Expansion Inputs/Outputs

Purchase an optional external input/output adapter (model: PAC-YG10HA) when using expansion inputs/outputs.

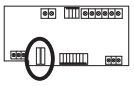

CN14	CN12	Function		Pin No.	Lead Wire
Ch3	Ch5	INPUT	ON/OFF	1	Green
			Error/Normal	2	Black
Ch4	Ch6		ON/OFF	3	Brown
			Error/Normal	4	Purple
Ch3	Ch5	OUTPUT	ON/OFF, (ON)	5	Orange
			(OFF)	6	Yellow
Ch4	Ch6		ON/OFF, (ON)	7	Blue
			(OFF)	8	Gray
-		Unused		9	Red

( ) is in the case of a pulse.

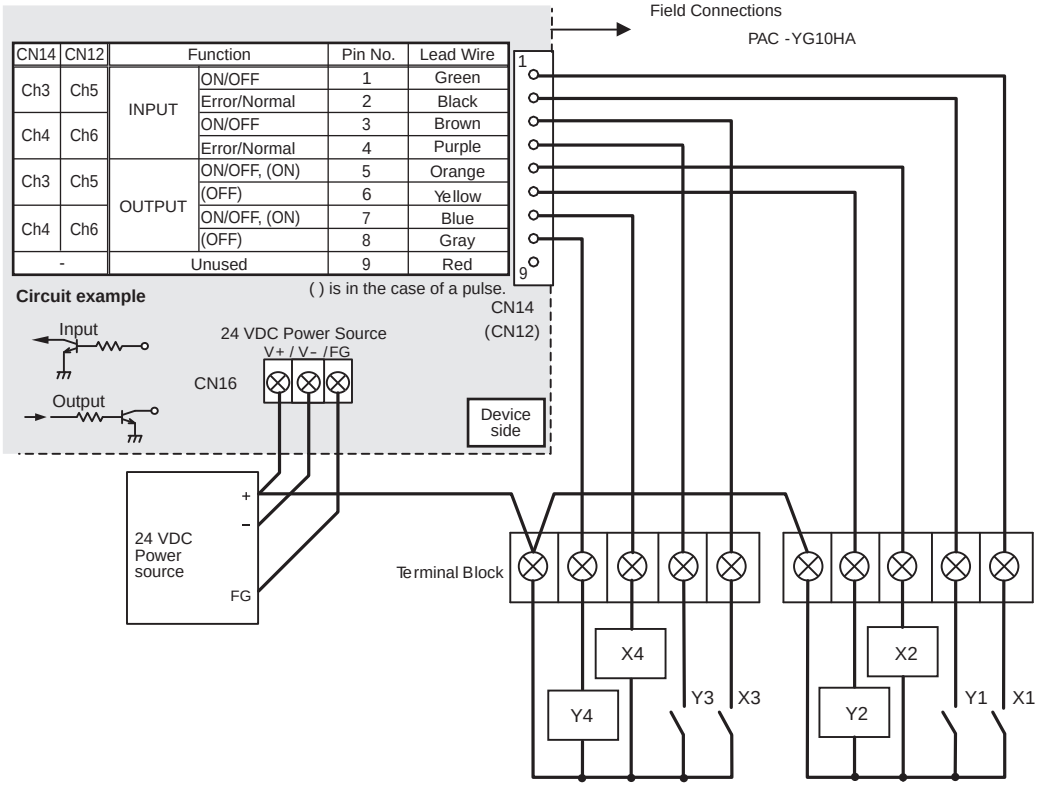

[Input]
Contacts closed (24 VDC applied): Operating (ON); detected an error
Contacts open : Stopped (OFF); detected as normal
* Error/normal detection becomes inverted from contact open/closed logic for a b-contact setting.
[Output]
Operate (ON) output : Transistor ON (sink)
Stop (OFF) output : Transistor OFF(open)
* Upon pulse output, the (ON), (OFF) transistors turn ON (sink) according to the output content. ((ON) and (OFF) refer to the junctions in the diagram.)

⚠CAUTION

- When using X1, X2, X3, X4, Y1, Y2, Y3 and Y4 relays, select ones that satisfy the following specifications.
  Operating coil Rated voltage: 24 VDC (Built-in diode)
  Power consumption: 0.9 W or less
  (*1) Be sure to use the ones with the voltages rated above. Exceeding the rated voltage may affect the ON/OFF of other outputs.
  (*2) When using a separate power supply for this device, connect GND of the power supply to V– of CN16 of the terminal block of this device.
  (*3) Use a relay with a withstanding voltage of at least 2000 VAC between the coil and contact. Otherwise, there is the likelihood of an electric shock or fire.
- Select a contact with a minimum applicable load of 1 mADC or less for the input contact.
- Do not install alongside or in contact with other wires.

3. Interlock control

The DIDO controller (PAC-YG66DCA) has an interlock control function, which enables operation or set temperature change on the M-NET devices such as indoor units and also enables signal output to the contacts on the DIDO controller.
Interlock control covers the units connected to the DIDO controller with M-NET system. AG-150A/GB-50A must be connected to use the function.
Ask your dealer for interlock control setting. The setting requires special tool support.

⚠CAUTION	Before using the interlock control, you must agree to the following. 1.This feature must not be used for disaster prevention or security purpose. (Not designed to be used in situations that are life-threatening) 2.No functions must be added that allow the malfunctioning unit to run by defeating the safety features, such as an external ON/OFF switch or a short-circuit. 3.Those settings for the function that are not supported by the interlocked units must not be made. All the settings must be made within the specified range. (Failure to observe these precautions may result in malfunctions and failures.) 4.Perform a test run for interlock control, and confirm the correct settings and normal operation. 5.The system must be configured in the way that integrates the operation of the interlocked fire and emergency control systems.

Item	Content	Remarks
Number of events	24 events	1 event interlock with 1 unit
Determinant condition for interlock control	At input contact change	• Operation input ON/OFF • Error input Error/Normal
Interlock control contents (to be output)	1 action for 1 condition • ON/OFF operation of indoor units • Operation mode change of indoor units • Temperature setting of indoor units (*1) • Contact output to DIDO controller (*2)	Interlock control covers the units connected to DIDO controllers with M-NET system. (*1) Temperature setting range: 19-28ºC (Standard setting) (*2) DIDO controller itself or other DIDO controllers in the same M-NET system.
Other	Interlock control prohibition function is enabled at emergency stop from AG-150A/GB-50A	

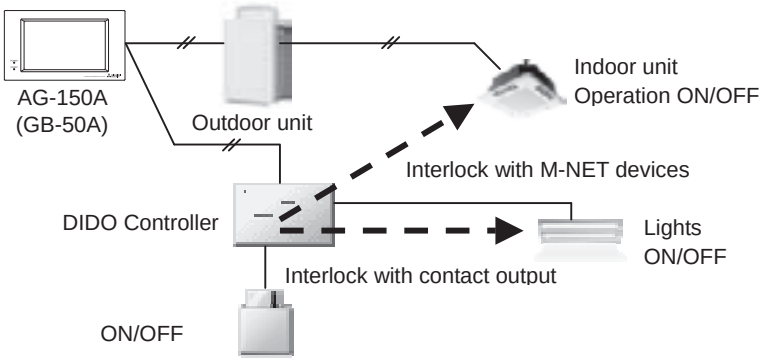

Interlock control of DIDO controller (example)

3-18. AI controller [PAC-YG63MCA]

The AI controller measures temperature and humidity; it also has an alarm capability if the measurement data exceeds defined setpoints.
Historical measurement data can be displayed via only the AG-150A/GB-50A Web browser and TG-2000A.
Temperature and humidity cannot be displayed on the AG-150A LCD.
Furthermore, an alarm can be output if measurement data exceeds a preset upper or lower limit.
The AI controller also features a function that interlocks M-NET devices for indoor units, etc.

■External Dimensions

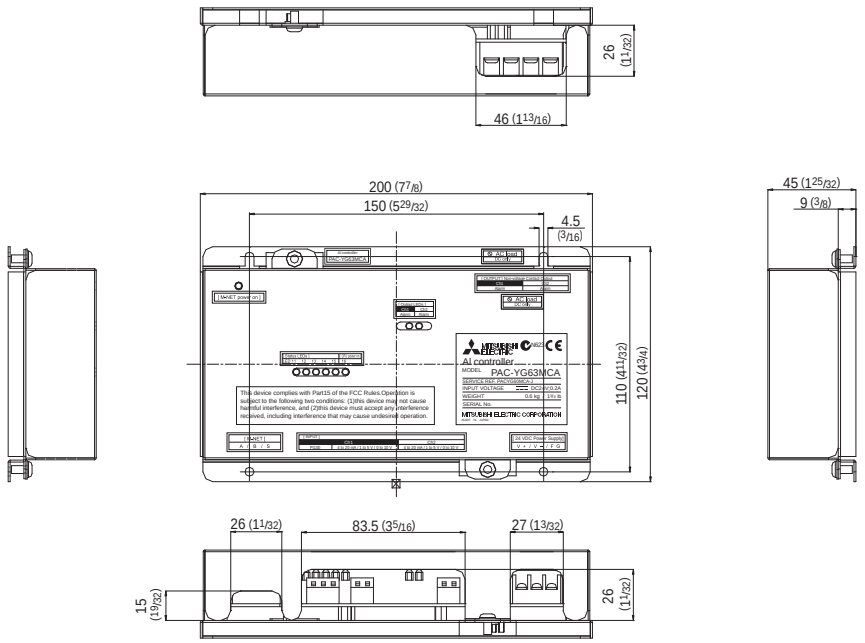

Unit: mm (in)

⚠CAUTION	Usage Restrictions • Mitsubishi Electric does not take financial responsibility for damages caused by issues beyond our control or special circumstances (predicable or unpredictable); and secondary or accidental damages, and damages to other objects. We also do not take financial responsibility for opportunities lost as a result of device failure, or electrical power failure at the end-user site. Mitsubishi Electric does not take financial responsibility caused by end-users' requests including, but not limited to, device testing, startup, readjustment and replacement. • Do not use this device in disaster prevention security or "critical to life" applications.

1. Specifications

(1). Device Specifications

Item	Description							
Power Supply	24 VDC ±10%: 5 W							Screw terminal block (M3) (*5)
Interface	M-NET communication				17 to 30 VDC (*1)			Screw terminal block (M3) (*5)
	Input (*2)	Ch	Sensor		Measurement target	Measurement range	Measurement error	External connection method
		Ch1	Pt100 (3-wire system)		Temperature	-30 to 60°C [-22 to 140°F]	±0.3%FS ±0.1°C (0.18°F) (*3) [at 25°C (77°F)]	Screwless terminal block (3 poles)
		Ch1	Analog	4 to 20 mADC	Temperature/ humidity	(Set by system controller)	±0.5%FS ±0.1°C (0.18°F) (*3) ±0.5%FS ±0.1%RH [at 25°C (77°F)]	Screwless terminal block (2 poles)
		Ch1	Analog	1 to 5 VDC				
		Ch1	Analog	0 to 10 VDC				
		Ch2	Analog	4 to 20 mADC	Temperature/ humidity	(Set by system controller)	±0.5%FS ±0.1°C (0.18°F) (*3) ±0.5%FS ±0.1%RH [at 25°C (77°F)]	Screwless terminal block (2 poles)
		Ch2	Analog	1 to 5 VDC				
		Ch2	Analog	0 to 10 VDC				
	Output	Upper/lower limit alarm interlock output (non-voltage contact)			Applied load MAX: 24 VDC, 5 W MIN: 5 VDC, 2 mW * AC loads cannot be connected.			Screw terminal block (M3.5) (*5)
Interlock Function	Interlock M-NET devices according to measurement data values. (*4)							
Environment Conditions	Temperature				Operating temperature range	0 to 40°C [32°F to 104°F]		
					Storage temperature range	-20 to 60°C [-4°F to 140°F]		
	Humidity				30 to 90%RH (no condensation)			
Dimensions	200 (W) × 120 (H) × 45 (D) mm / 7 7/8 (W) × 4 3/4 (H) × 1 25/32 (D) in							
Weight	0.6 kg / 1 3/8 lb							
Time Backup During Power Failure	In the event of power failure or shut-off, the internal capacitor will continue to track time for approximately one week. (The internal capacitor takes about 24 hours to fully charge; a replacement battery is not necessary.)							
Installation Environment	Inside the metal control board (indoors) * Use this product in a hotel, a business office environment or similar environment.							

*1: Supply electric power from a power supply unit for the transmission line or an outdoor unit. Furthermore, the power consumption factor of the MNET circuitry of this unit is "1/4" (equivalent to one ME Remote Controller).

*2: Configure the dip switch settings for the analog input method to use.

*3: The measurement error for the system includes the measurement error for this unit, sensor, and wiring.
a%FS (full scale) = a% × ([measurement range's upper limit value] - [lower limit value])

*4: Settings for the interlock function are performed from the Maintenance Tool. For details, refer to the operation manual for the Maintenance Tool.

*5: M3 and M3.5 are sizes of the screw on the terminal block (ISO metric screw thread). The number indicates the screw diameter (mm).

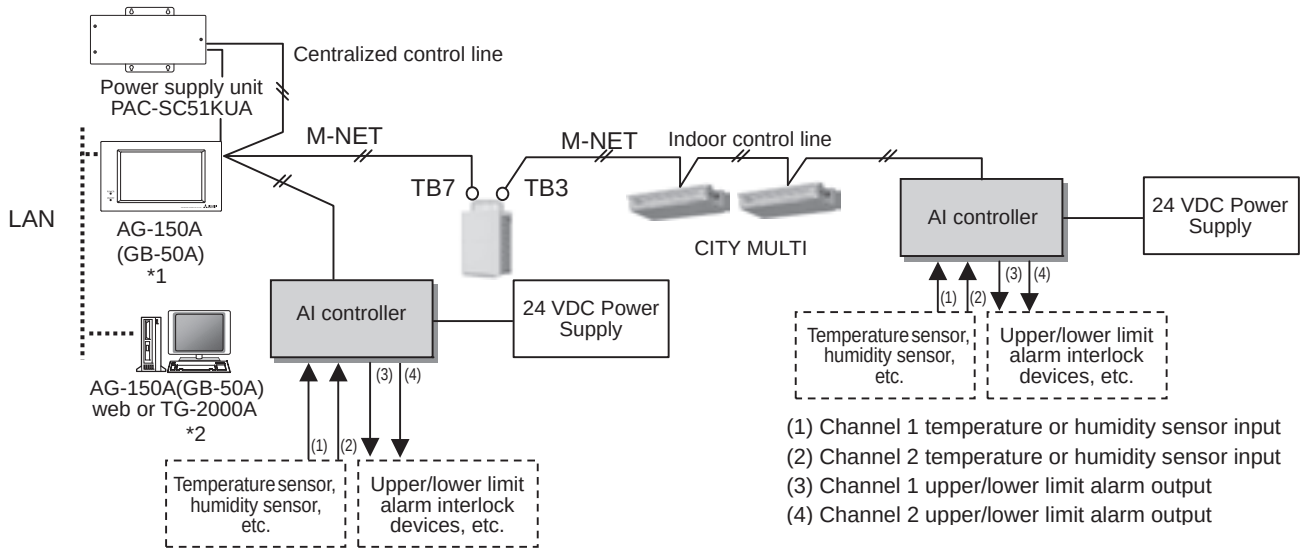

* This figure omits the power supply line and only shows the transmission line.

*1: The AI controller can be connected to GB-50A with Ver.3.22 or later.
*2: The AI controller can be connected to TG-2000A with Ver.5.60/5.30 or later.

<Restrictions>
Maximum of 50 units per AG-150A/GB-50A
However, the number of units that can be connected to a AG-150A/GB-50A is up to 50 including this device, an indoor unit, LOSSNAY unit, etc.

NOTE	• For the shield ground of the M-NET centralized control line, use single-point grounding at the power unit for the transmission line. However, when supplying electric power to the M-NET centralized control line from the R410A series outdoor unit*1 without using a power supply unit for the transmission line, use single-point grounding at the TB7 of that outdoor unit. *1 : Except PUMY model. Furthermore, when connecting the M-NET transmission line of this device to the M-NET indoor control line, use grounding at the TB3 for each outdoor unit system. • If the M-NET transmission line of this device is connected to an M-NET indoor control line and the outdoor unit is down because, for example, the power supply is interrupted for servicing or there is a failure, the AI controller cannot be set and monitored from the system controller. • The sensor connected to the AI controller can only be monitored from AG-150A/GB-50A Web browser and TG-2000A. The sensor cannot be monitored from the AG-150A LCD.

(2). Parts Purchased Separately

Prepare the following parts to install this device.

Required Part	Specification
Unit fixing screws	M4 screw × 4 (* M4: ISO metric screw thread)
Power supply for this device	Commercially available power source: 24 VDC ±10% 0.2 A (Minimum loading), SELV circuit, power line with grounding terminal Ripple noise: Lower than 200 mVp-p Compatible specification Authorized or CE marked products. Subject to regulations: - IEC60950 (or EN60950) - CISPR22/24 (or EN55022/24) - IEC61000-3-2/3-3 (or EN61000-3-2/3-3)
Power supply for sensors	A separate power supply for sensors may be required. In the case of 24 VDC voltage, the capacity of the power supply for this unit can be increased so that the power supply can be shared.
Power line	Use a sheathed vinyl cord or cable. At least 0.75 mm^2 (AWG18)
M-NET transmission line	Type of the cable: Sheathed vinyl cords or cable which comply with the following specifications or equivalent. • CPEV ø1.2 mm to ø1.6 mm • CVVS 1.25 mm^2 to 2 mm^2 (AWG 16 to 14) * CPEV: PE insulated PVC jacketed shielded communication cable * CVVS: PVC insulated PVC jacketed shielded control cable PE: Polyethylene PVC: Polyvinyl chloride Power needs to be supplied to the M-NET circuitry of this device. Use an outdoor unit or a separately purchased power supply unit for the transmission line.
Signal lines (Sensor input lines)	Shows the size of the electric wire (copper wire) that is adapted to the terminal block of this device. Refer to the usage and cautionary items of the sensor when performing settings. However, use a line with shielded line. Electric wire size ···· (1)Solid wire: ø0.65 mm (AWG21) - ø1.2 mm (AWG16) (2)Stranded wire: 0.75 mm^2 (AWG18) - 1.25 mm^2 (AWG16) Single strand: At least ø0.18 mm

[Parts to be Purchased Separately]

Name	Model	Application	Remark
Power supply unit	PAC-SC51KUA	Power supply to the M-NET transmission line	This is not required when power is to be supplied from an outdoor unit.

[Commercially available parts]

Part	Use	Remark
External 24 VDC power source	Supplies power to the AI controller.	Refer to "Power supply for this device" and "Power supply for sensors" in "Required Part" above for the capacity of the power supply.
Sensor	Measures temperature and humidity.	Temperature sensor (PAC-SE40TSA) cannot be connected.

2. Wiring Instructions

(1). Connecting the Power and M-NET Transmission Lines

Tightening torque for terminal screws: 1 N·m

Connect the M-NET transmission line of this device to a power supply unit (PAC-SC51KUA) for the M-NET transmission line or an outdoor unit (either a centralized control line or indoor control line can be connected).
* Only the M-NET circuitry of this device receives the power from the M-NET transmission line. The power consumption factor is "1/4" (equivalent to one ME Remote Controller).

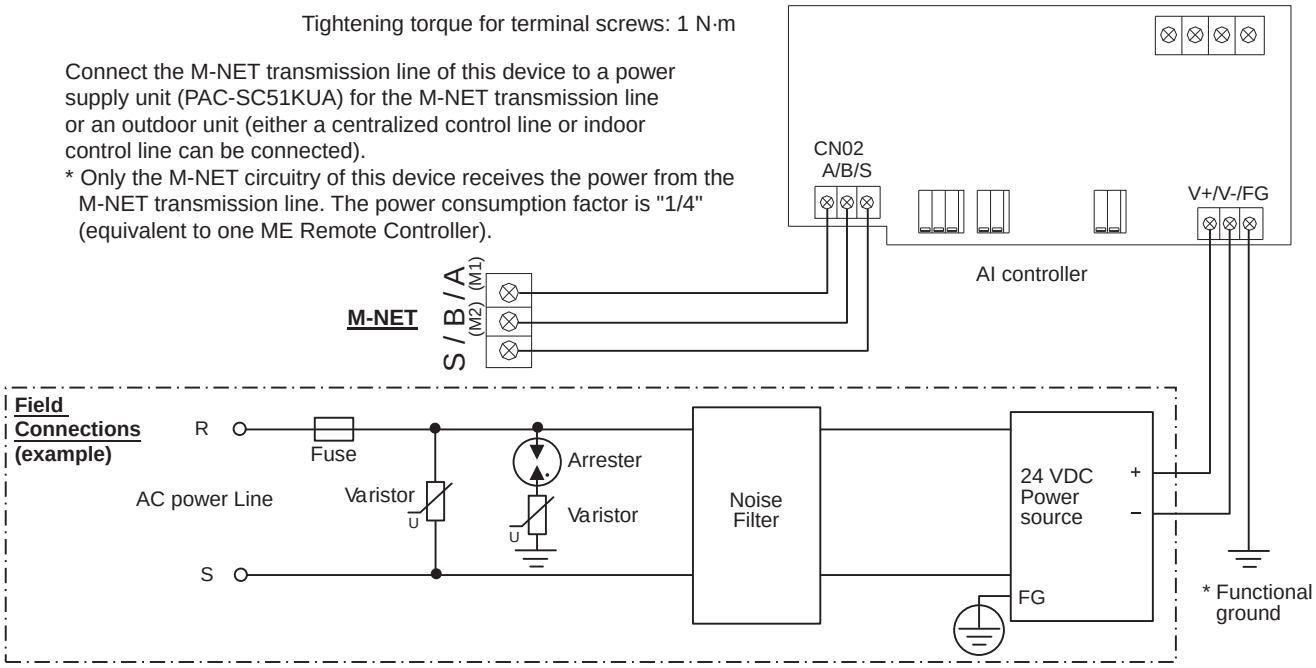

⚠CAUTION	• Use a power line and M-NET transmission line that satisfy the specifications described in "1-(2). Parts Purchased Separately". • Attach a circuit comprising the following components to the supply primary side of the 24 VDC power supply. (1) Varistor, (2) Arrester, (3) Noise filter, (4) Fuse • It is important to pay attention to the polarity when connecting to the 24 VDC power supply terminal block. Connecting the positive and negative in the reverse order will cause a failure. • Fix the power line and M-NET transmission line in place on the outside to ensure that the terminal block is not affected by any external force. Not securely connecting and fixing the wires in place may cause heat generation and fire. • Make sure that the copper wiring is not short-circuiting the plates (cover, lower case) or neighboring wires. Cover the shielded line of the M-NET transmission line with materials such as vinyl tape and prevent short-circuiting with the plates.

NOTE	• If the M-NET transmission line of this device is connected to an M-NET indoor control line and the outdoor unit is down because, for example, the power supply is interrupted for servicing or there is a failure, the AI controller cannot be set and monitored from the system controller. • Be sure to ground this device, PAC-SC51KUA and 24 VDC Power source. Measurement accuracy may be affected if devices are not grounded.

(2). Connecting the Sensors

- For channel 1, select one of the following four types: Pt100 detection, 4 to 20 mADC, 1 to 5 VDC, or 0 to 10 VDC analog input.
- For channel 2, select one of the following three types: 4 to 20 mADC, 1 to 5 VDC, or 0 to 10 VDC analog input.
- The wire length depends on the specifications of the sensor. However, since the use of long wires makes the device susceptible to noise, using wires shorter than 12 m (39.4 ft) is recommended. Use a shielded line for the sensor line and connect to the FG terminal on this unit or the FG terminal on the control panel.

1) Channel 1 Pt100 Input

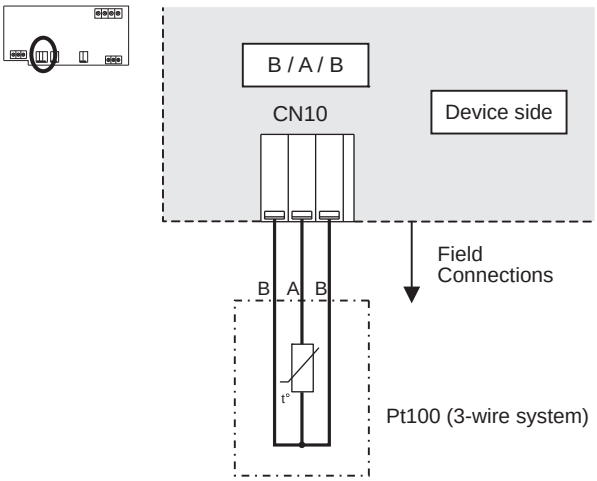

⚠CAUTION	• Use a 3-wire system for Pt100. • A/B polarity is important for Pt100. Be sure to match the polarity when using Pt100. • Do not install the sensor input line parallel to or near the M-NET transmission line or power line. Also avoid loop wiring. Furthermore, confirm the precautions for the sensor. • Strip 12±1 mm (15/32 ±1/32 in) of the wire coating and insert firmly into the terminal. • Make sure that the copper wiring is not short-circuiting the plates (cover, lower case) or neighboring wires. • Perform wiring so that the terminal block is not strained. If strained, use a wire guide or junction terminal to alleviate the stress on the terminal block.

2) Channel 1 (Channel 2) Analog Input (4 to 20 mADC, 1 to 5 VDC, 0 to 10 VDC)

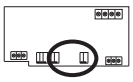

(a) When 1 to 5 VDC, 0 to 10 VDC, or 4 to 20 mADC (type for which power is supplied to the sensor) is connected

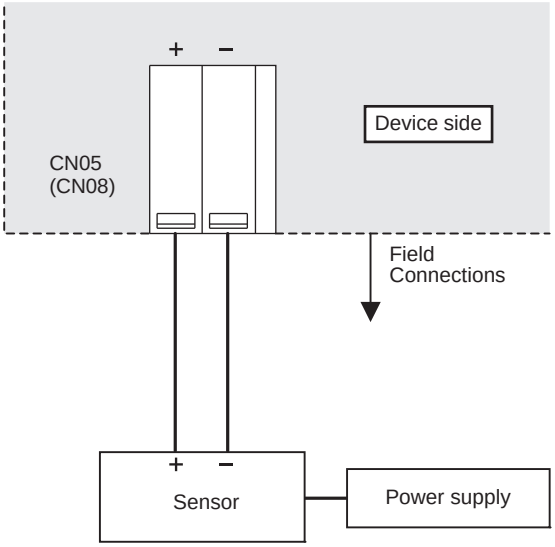

(b) When 4 to 20 mADC (type for which power is supplied to the signal line) is connected

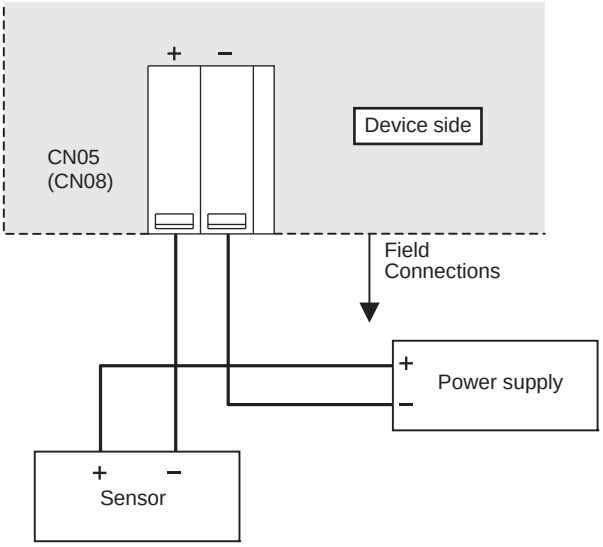

⚠CAUTION

- Select a power supply that is suitable for the sensor to be used.
- Do not install the sensor input line parallel to or near the M-NET transmission line or power line. Also avoid loop wiring.
  Furthermore, confirm the precautions for the sensor.
- Strip 12±1 mm (15/32 ±1/32 in) of the wire coating and insert firmly into the terminal.
- Make sure that the copper wiring is not short-circuiting the plates (cover, lower case) or neighboring wires.
- Perform wiring so that the terminal block is not strained.
  If strained, use a wire guide or junction terminal to alleviate the stress on the terminal block.

(3). Connecting Alarm Setpoint Outputs (Non-valtage Contacts)

The maximum wire length is 100 m. However, since the use of long wires makes the device susceptible to noise, using wires no more than 10 m long is recommended.

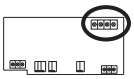

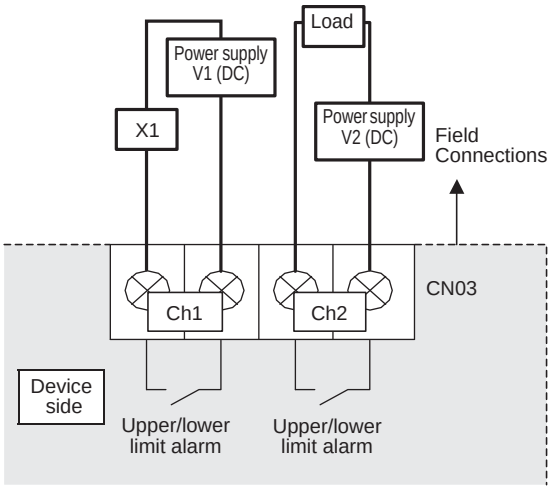

* The contact of the internal relay is always ON during detection of an upper/lower limit alarm. (Level output)

Tightening torque for terminal screws: 1 N·m.

⚠CAUTION

- To use X1 relay, obtain one that satisfies the following specifications.
  Operating coil
  [Applied load]
  MAX: 24 VDC, 5 W (Built-in diode)
  MIN: 5 VDC, 2 mW (Built-in diode)
  *1 AC loads cannot be connected.
  *2 Provide a power supply (V1, V2) that matches the load and relay to be used.
- To drive a direct load, use ones within the following.
  [Applied load]
  MAX: 24 VDC, 5 W
  MIN: 5 VDC, 2 mW
  * AC loads cannot be connected.
- Make sure that the copper wiring is not short-circuiting the plates (cover, lower case) or neighboring wires.
- Perform wiring so that the terminal block is not strained.
  If strained, use a wire guide or junction terminal to alleviate the stress on the terminal block.
- Do not connect the wires directly from the top of the control panel to the terminal block.
  Moisture may enter this device along the wiring and cause electric shock or fire.

3. Interlock control

AI controller (PAC-YG63MCA) has an interlock control function, which enables operation or set temperature change on the M-NET devices such as indoor units.
Interlock control covers the units connected to the AI controller with M-NET system. AG-150A/GB-50A must be connected to use the function. function.
Ask your dealer for interlock control setting. The setting requires special tool support.

⚠CAUTION	Before using the interlock control, you must agree to the following. 1.This feature must not be used for disaster prevention or security purpose. (Not designed to be used in situations that are life-threatening) 2.No functions must be added that allow the malfunctioning unit to run by defeating the safety features, such as an external ON/OFF switch or a short-circuit. 3.Those settings for the function that are not supported by the interlocked units must not be made. All the settings must be made within the specified range. (Failure to observe these precautions may result in malfunctions and failures.) 4.Perform a test run for interlock control, and confirm the correct settings and normal operation. 5.The system must be configured in the way that integrates the operation of the interlocked fire and emergency control systems.

Item	Content	Remarks
Number of events	24 events	1 event interlock with 1 unit
Determinant condition for interlock control	Measurement value Measurement interval is 1 to 7200 seconds.	• Exceeding measurement value in setting range • Exceeding upper/lower limit alarm detection value and cancellation value
Interlock control contents (to be output)	1 action for 1 condition • ON/OFF operation of indoor units • Operation mode change of indoor units • Temperature setting of indoor units (*1) • Contact output to DIDO controller	Interlock control covers the units connected to AI controllers with M-NET system. (*1) Temperature setting range: 19-28ºC (Standard setting)
Other	Interlock control prohibition function is enabled at emergency stop from AG-150A /GB-50A	

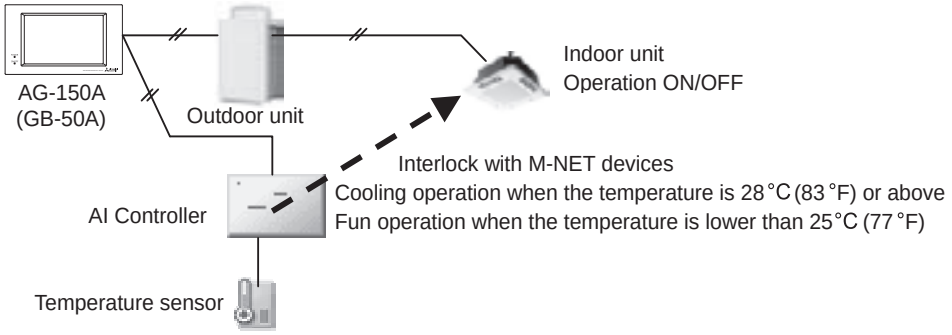

Interlock control of AI controller (example)

4-1. S, Y, HP, R2 series

CITY MULTI system can be monitored or controlled with signal to/from the outside as every control board of Indoor unit or Outdoor unit has input/output signal connectors. Independent control to the individual Indoor or Outdoor can be carried out by using these connectors. Yet, for large-scale control, MELANS would be much easier. When using input/output connectors, a dedicated adapter (optional part) and a relay circuit needed to be prepared by the site.
Following are some typical example.

Table 4-1. Control can be achieved by using Outdoor input/output connectors.

Function	Usage	Using connector		Signal	Option
		PUHY	PURY		
Demand	Prohibiting cooling/heating operation (thermo OFF) by an external input to the outdoor unit. * It can be used as the demand control for each refrigerant system.	CN3D	CN3D	Input (level-signal)	Adapter for external input (PAC-SC36NA-E)
Low noise mode	Performs a low noise operation of the outdoor unit by an external input to the outdoor unit. * It can be used as the low noise operation device for each refrigerant system.				
Snow sensor signal input	Forces the outdoor unit to perform a fan operation by receiving signals from the snow sensor. *4	CN3S	CN3S		
Auto-changeover	Cooling/heating operation can be changed by an external input to the outdoor unit.	CN3N	-		
Operation status of the compressor	How to extract signals from the outdoor unit. * It can be used as an operation status display device.	CN51	CN51	Output (level-signal)	Adapter for external output (PAC-SC37SA-E)
Error status	* It can be used for an interlock operation with external devices.				

*1 For details, refer to 1) through 4) shown below.
*2 Low noise mode is valid when Dip SW4-4 on the outdoor unit is set to OFF. When DIP SW4-4 is set to ON, 4 levels of on-DEMAND are possible, using different configurations of low noise mode input and DEMAND input settings.
When 2 or more outdoor units exist in one refrigerant circuit system, 8 levels of on-DEMAND are possible. When 3 outdoor units exist in one refrigerant circuit system, 12 levels of on-DEMAND are possible.
*3 Low noise mode can be switched from ability main to low noise main with Dip SW5-5 on the outdoor unit. Dip SW5-5 OFF: ability main (ability main mode : The sound pressure level is reduced by limiting the maximum fan frequency under the following condition. Cooling mode : outdoor temp. (TH6)< 30°C Heating mode : outdoor temp. (TH6) > 3°C), ON: low noise main.
*4 When multiple outdoor units exist in one refrigerant circuit system, settings on every outdoor unit (signal input) are required.
*5 For detailed drawing, refer to "4-2. Outdoor unit input/output connector".

1) Table 4-1-1 SW4-4: OFF (Compressor ON/OFF, Low noise mode)

CN3D 1-3P	2-level of on-Demand *6
Open	100%(No Demand)
Short-circuit	0%

CN3D 1-2P	Low noise mode *7
Open	OFF
Short-circuit	ON

*6 When SW4-4 on the outdoor unit in one refrigerant circuit system is set to ON (4 levels or 8 levels or 12 levels of on- DEMAND), this function cannot be used.
*7 This function and the 4 levels or 8 levels on-DEMAND function can be used together. Input the order to CN3D 1-2P on the outdoor unit whose SW4-4 is set to OFF.

2) When SW4-4 on one outdoor unit in one refrigerant circuit system is set to ON (4 levels of on-DEMAND) (*8)

	CN3D 1-2P	
CN3D 1-3P	Open	Short-circuit
Open	100% (No DEMAND)	75%
Short-circuit	0%	50%

Note the following steps to be taken when using STEP DEMAND.
Example: When switching from 100% to 50%

Steps in DEMAND level setting						
	<WRONG>	100%	→	0%	→	50%
	<CORRECT>	100%	→	75%	→	50%

If the demand settings are switched in the wrong order listed as the wrong example above, the unit may go into thermo OFF mode.
The percentage of the DEMAND listed in the table above is an approximate value based on the compressor volume and does not necessarily correspond with the capacity.
This function and the Low noise mode function cannot be used together.

3) When SW4-4 on the two outdoor units in one refrigerant circuit system is set to ON (8 levels of on-DEMAND) (*8,*9)

8 levels of on-DEMAND		No.2 CN3D				
		1-2P	Open		Short-circuit	
No.1 CN3D	1-2P	1-3P	Open	Short-circuit	Open	Short-circuit
	Open	Open	100% (No DEMAND)	50%	88%	75%
		Short-circuit	50%	0%	38%	25%
	Short-circuit	Open	88%	38%	75%	63%
		Short-circuit	75%	25%	63%	50%

4) When SW4-4 on the all outdoor units in one refrigerant circuit system is set to ON (12 levels of on-DEMAND) (*9)

12 levels of on-DEMAND	No.2 CN3D	1-2P	Open							
		1-3P	Open				Short-circuit			
	No.3 CN3D	1-2P	Open		Short-circuit		Open		Short-circuit	
No.1 CN3D	1-2P	1-3P	Open	Short-circuit	Open	Short-circuit	Open	Short-circuit	Open	Short-circuit
	Open	Open	100%	67%	92%	84%	67%	34%	59%	50%
		Short-circuit	67%	34%	59%	50%	34%	0%	25%	17%
	Short-circuit	Open	92%	59%	84%	75%	59%	25%	50%	42%
		Short-circuit	84%	50%	75%	67%	50%	17%	42%	34%

12 levels of on-DEMAND	No.2 CN3D	1-2P	Short-circuit							
		1-3P	Open				Short-circuit			
	No.3 CN3D	1-2P	Open		Short-circuit		Open		Short-circuit	
No.1 CN3D	1-2P	1-3P	Open	Short-circuit	Open	Short-circuit	Open	Short-circuit	Open	Short-circuit
	Open	Open	92%	59%	84%	75%	84%	50%	75%	67%
		Short-circuit	59%	25%	50%	42%	50%	17%	42%	34%
	Short-circuit	Open	84%	50%	75%	67%	75%	42%	67%	59%
		Short-circuit	75%	42%	67%	59%	67%	34%	59%	50%

*8 Input the order to CN3D on the outdoor unit whose SW4-4 is set to ON.
*9 CN3D of No. 1, 2, 3 can be selected arbitrary with the outdoor unit whose SW4-4 is set to ON.

Table 4-2. Control can be achieved by using Indoor input/output connectors.

Function	Usage	Using connector	Signal
Remote/Local switching *1 ON/OFF *2*3	Indoor group can be controlled ON/OFF by an ON/OFF switching or contact input to the connector of the head Indoor in an Indoor group. It can be interlocked with timer, door, window, or other equipment to "Force stopping"	CN32	Input (level-signal)
ON/OFF *2*3	Indoor group can be controlled ON/OFF by an external pulse signal input to the connector of the head Indoor in an Indoor group.	CN51	Input (pulse-signal)
Demand	Indoor group can be controlled ON/OFF by an ON/OFF switching or contact input to the connector of every Indoor in an Indoor group.	CN52	Input (pulse-signal)
Monitoring ON/OFF state	Signal output from a head Indoor unit, presenting its Indoor group.	CN51	Output
Monitoring heating state	It can be used for monitoring or interlock with other equipment purpose and so on.	CN52	
Monitoring cooling/drying state		CN52	
Monitoring Error state Monitoring Thermo-OFF(fan) state	Signal output from every Indoor unit, for monitoring Error or Thermo-off (fan) state. It can be used for monitoring or interlock with other equipment purpose and so on.	CN51 CN52	Output

*1. When switching to Remote, control at Local remote controller will NOT be effective, but the "CENTRALLY CONTROLLED" is displayed.
*2. MA or ME remote controller is needed for this function.
*3. If using ON/OFF input function, Automatic-address-start-up can not be performed to start-up the system at commissioning.
*4. If CITY MULTI use GB-50A/AG-150A and PLC software to control the Indoor unit via its external input/output connectors, Dip Switch 1-9 and Dip Switch 1-10 should be set to ON.
In this case, the input/output connectors act as normal connectors, functions mentioned at Table 4-2 are no more available.
Details are available at the PLC software Instruction Manual.

Table 4-3. ON/OFF control to each Indoor unit (group) by using Dip Switch 9 and 10 (SW1-9, SW1-10) of the Indoor unit.

Function	Operation on Indoor units	Setting Dip Switch *1*4	
		1-9	1-10
Auto ON	All indoor units will turn ON and automatically resume to its previous mode after 5 minutes from power recovery.	OFF	ON
Auto recovery	Indoor unit recovers to its previous state (ON/OFF, mode) after 5 minutes from power recovery.	ON	OFF
All OFF	Forced stopping regardless of Indoor units' state.	OFF	OFF

*1. The Dip Switch setting should be carried out on every Indoor unit in the group.
*2. Outdoor unit's power supply should NOT be cut. Otherwise, power supply to case heater of the compressor would be cut too, which may cause damage to the compressor.
*3. Above method can not be applied to the power ON/OFF of the drain pump and humidifier equipment.
*4. If CITY MULTI use GB-50A/AG-150A and PLC software to control the Indoor unit via its external input/output connectors, Dip Switch 1-9 and Dip Switch 1-10 should be set to ON.
In this case, the input/output connectors act as normal connectors, functions mentioned at Table 4-3 are no more available.

■ System example

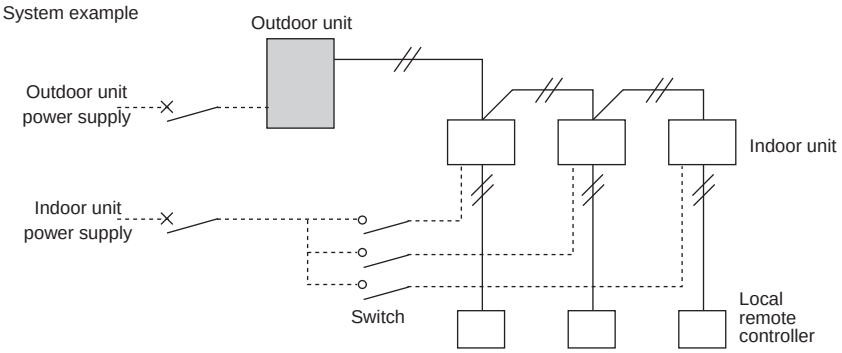

Restart of the CITY MULTI needs to be careful. When no power supply to the outdoor unit, no power supply to the compressor case heater too. The compressor needed to be warmed up before running. When using above functions, power supply to the outdoor unit should be ensured.

Table 4-4. How to use Remote/Local switching connector CN32

State	Local remote controller display and operation	CN32-SW-1 for Local/Remote control switching	CN32-SW-2 for Remote "ON/OFF" operation
Local remote controller control	Operation is permitted	OFF	OFF
Remote STOP	"CENTRALLY CONTROLLED" flashing, "ON/OFF" at local remote controller is not possible.	ON	OFF
Remote START	"CENTRALLY CONTROLLED" flashing, "ON/OFF" at local remote controller is not possible.	ON	ON

* For details refer to CN32 in section “4-5. Indoor unit “-E” type input/output connector”.

Table 4-5. Limitations to combining system controls

	Description		Control combining distant/local	Pulse ON/OFF	Power ON/OFF	Automatic recover
1	Control combining distant/local	CN32	-	×*1	×*1	×*1
2	Pulse ON/OFF	CN51		-	O	O
3	HA ON/OFF(JEMA)	CN51			O	O
4	Power ON/OFF	-			-	×
5	Automatic recover	-				-

*1. Pulse ON/OFF, power ON/OFF and automatic recover can only be used when the remote/local setting CN32 is set to local.
Therefore, always avoid this function when combining control.

4-2. Outdoor unit input/output connector

⚠ Caution:	1.Wiring should be covered by insulation tube with supplementary insulation. 2.Use relays or switches with IEC or equivalent standard. 3.The electric strength between accessible parts and control circuit should have 2750V or more.

4-2-1. Output

• State (CN51)

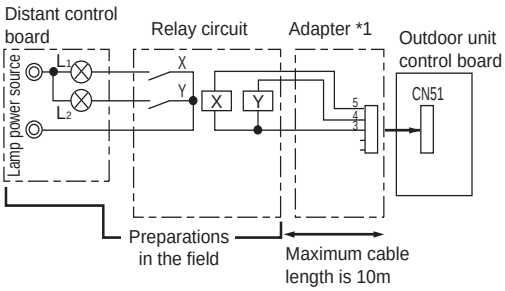

L1 : Outdoor unit error display lamp
L2 : Compressor operation lamp (compressor running state)
X, Y : Relay (coil =<0.9W : 12VDC)

*1. Optional part : PAC-SC37SA-E or field supply.

4-2-2. Input

Y, HP, R2 series

(1) Step demand and Low noise mode (CN3D)

For details, refer to "Table 4-1-1".

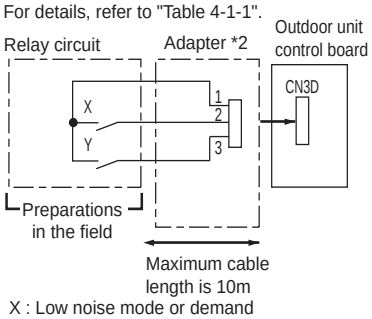

X : Low noise mode or demand
Y : Demand
X,Y : Relay Contact rating voltage >= 15VDC
Contact rating current >= 0.1A
Minimum appicable load =< 1mA at DC
*2. Optional part : PAC-SC36NA-E or field supply.

(2) Low noise mode (CN3D + DipSW4-4 OFF)

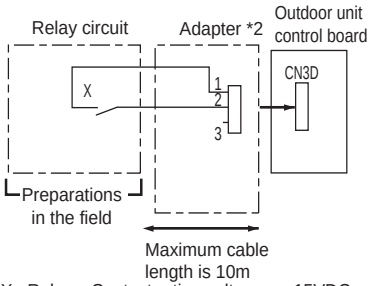

X : Relay Contact rating voltage >= 15VDC
Contact rating current >= 0.1A
Minimum applicable load =< 1mA at DC
*2. Optional part : PAC-SC36NA-E or field supply.

Low noise mode : The sound pressure level is reduced by controlling the maximum fan frequency and compressor frequency.

-Note-
The sound pressure level can not be reduced, when neither the fan frequency nor the compressor frequency are maximum.

(3) Autochangeover (CN3N) (R2 excluded)

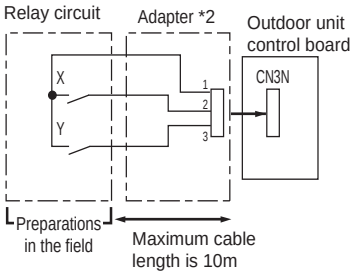

X : Cooling / Heating
Y : Validity / Invalidity of X
X,Y : Relay Contact rating voltage >= 15VDC
Contact rating current >= 0.1A
Minimum applicable load =< 1mA at DC
*2. Optional part : PAC-SC36NA-E or field supply.

		X	
		OFF	ON
Y	OFF	Normal	
	ON	Cooling	Heating

(4) Snow sensor (CN3S)

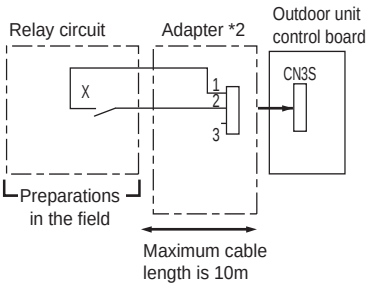

X : Relay Contact rating voltage >= 15VDC
Contact rating current >= 0.1A
Minimum applicable load =< 1mA at DC
*2. Optional part : PAC-SC36NA-E or field supply.
Snow sensor : The outdoor fan runs when X is closed in stop mode or thermostat mode.

S series

(1) Step demand and Low noise mode (CN3D)

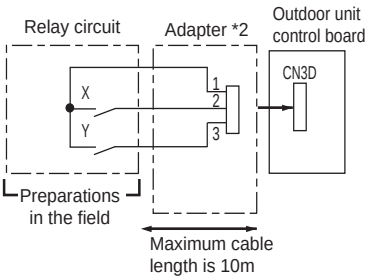

X,Y : Relay Contact rating voltage >= 15VDC
Contact rating current >= 0.1A
Minimum appicable load =< 1mA at DC

*2. Optional part : PAC-SC36NA-E or field supply.

DipSW8-1 ON (Step demand only)

		X	
		OFF	ON
Y	OFF	100%	75%
	ON	0%	50%

*They are rough values.

DipSW8-1 OFF (Compressor ON/OFF and Low noise mode)

Y	Compressor ON/OFF
OPEN	ON
SHORT	OFF

X	Low noise mode
OPEN	OFF
SHORT	ON

(2) Low noise mode (CN3D + DipSW8-1 OFF)

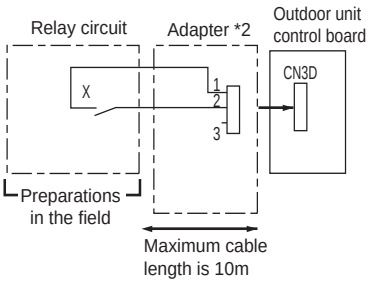

X : Relay Contact rating voltage >= 15VDC
Contact rating current >= 0.1A
Minimum applicable load =< 1mA at DC

*2. Optional part : PAC-SC36NA-E or field supply.

Low noise mode : The sound pressure level is reduced by controlling the maximum fan frequency and compressor frequency.

-Note-
The sound pressure level can not be reduced, when neither the fan frequency nor the compressor frequency are maximum.

(3) Autochangeover (CN3N)

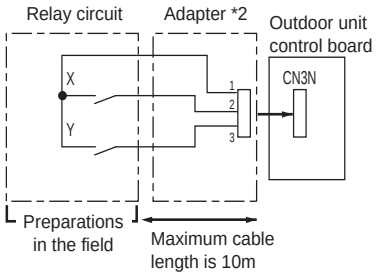

SW1 : Cooling / Heating
SW2 : Validity / Invalidity of X
X, Y : Relay Contact rating voltage >= 15VDC
Contact rating current >= 0.1A
Minimum applicable load =< 1mA at DC

*2. Optional part : PAC-SC36NA-E or field supply.

		X	
		OFF	ON
Y	OFF	Normal	
	ON	Cooling	Heating

4-3. WY, WR2 series

CITY MULTI system can be monitored or controlled with signal to/from the outside as every control board of Indoor unit or heat source unit has input/output signal connectors. Independent control to the individual Indoor or heat source can be carried out by using these connectors. Yet, for large-scale control, MELANS would be much easier. When using input/output connectors, a dedicated adapter (optional part) and a relay circuit needed to be prepared by the site.
Following are some typical example.

Table 4-1. Control can be achieved by using heat source input/output connectors.

Function	Usage	Using connector		Signal	Option
		PQHY	PQRY		
Demand	Prohibiting cooling/heating operation (thermo OFF) by an external input to the heat source unit. * It can be used as the demand control for each refrigerant system.	CN3D	CN3D	Input (level-signal)	Adapter for external input (PAC-SC36NA-E)
Low noise mode	Performs a low noise operation of the heat source unit by an external input to the heat source unit. * It can be used as the low noise operation device for each refrigerant system.				
Pump Interlock signal input	Forces the heat source unit to stop operation by receiving contact signals from the pump interlock circuit	TB8	TB8		
Auto-changeover	Cooling/heating operation can be changed by an external input to the heat source unit.	CN3N	-		Adapter for external output (PAC-SC37SA-E)
Operation status of the compressor	How to extract signals from the heat source unit. * It can be used as an operation status display device. * It can be used for an interlock operation with external devices.	CN51	CN51	Output (level-signal)	
Error status					
Operation ON signal		TB8	TB8		

*1 For details, refer to 1) through 4) shown below.
*2 Low noise mode is valid when Dip SW4-4 on the heat source unit is set to OFF. When DIP SW4-4 is set to ON, 4 levels of on-DEMAND are possible, using different configurations of low noise mode input and DEMAND input settings.
When 2 or more heat source units exist in one refrigerant circuit system, 8 levels of on-DEMAND are possible. When 3 heat source units exist in one refrigerant circuit system, 12 levels of on-DEMAND are possible.
*3 For detailed drawing, refer to "4-4. heat source unit input/output connector".

1) Table 4-1-1 SW4-4: OFF (Compressor ON/OFF, Low noise mode)

CN3D 1-3P	2-level of on-Demand *4
Open	100%(No Demand)
Short-circuit	0%

CN3D 1-2P	Low noise mode *5
Open	OFF
Short-circuit	ON

*4 When SW4-4 on the heat source unit in one refrigerant circuit system is set to ON (4 levels or 8 levels or 12 levels of on- DEMAND), this function cannot be used.
*5 This function and the 4 levels or 8 levels on-DEMAND function can be used together. Input the order to CN3D 1-2P on the heat source unit whose SW4-4 is set to OFF.

2) When SW4-4 on one heat source unit in one refrigerant circuit system is set to ON (4 levels of on-DEMAND) (*6)

	CN3D 1-2P	
CN3D 1-3P	Open	Short-circuit
Open	100% (No DEMAND)	75%
Short-circuit	0%	50%

Note the following steps to be taken when using STEP DEMAND.
Example: When switching from 100% to 50%

Steps in DEMAND level setting						
	<WRONG>	100%	→	0%	→	50%
	<CORRECT>	100%	→	75%	→	50%

If the demand settings are switched in the wrong order listed as the wrong example above, the unit may go into thermo OFF mode.
The percentage of the DEMAND listed in the table above is an approximate value based on the compressor volume and does not necessarily correspond with the capacity.
This function and the Low noise mode function cannot be used together.

3) When SW4-4 on the two heat source units in one refrigerant circuit system is set to ON (8 levels of on-DEMAND) (*6,*7)

8 levels of on-DEMAND		No.2 CN3D				
		1-2P	Open		Short-circuit	
No.1 CN3D	1-2P	1-3P	Open	Short-circuit	Open	Short-circuit
	Open	Open	100% (No DEMAND)	50%	88%	75%
		Short-circuit	50%	0%	38%	25%
	Short-circuit	Open	88%	38%	75%	63%
		Short-circuit	75%	25%	63%	50%

4) When SW4-4 on the all heat source units in one refrigerant circuit system is set to ON (12 levels of on-DEMAND) (*7)

12 levels of on-DEMAND	No.2 CN3D	1-2P	Open							
		1-3P	Open				Short-circuit			
	No.3 CN3D	1-2P	Open		Short-circuit		Open		Short-circuit	
No.1 CN3D	1-2P	1-3P	Open	Short-circuit	Open	Short-circuit	Open	Short-circuit	Open	Short-circuit
	Open	Open	100%	67%	92%	84%	67%	34%	59%	50%
		Short-circuit	67%	34%	59%	50%	34%	0%	25%	17%
	Short-circuit	Open	92%	59%	84%	75%	59%	25%	50%	42%
		Short-circuit	84%	50%	75%	67%	50%	17%	42%	34%

12 levels of on-DEMAND	No.2 CN3D	1-2P	Short-circuit							
		1-3P	Open				Short-circuit			
	No.3 CN3D	1-2P	Open		Short-circuit		Open		Short-circuit	
No.1 CN3D	1-2P	1-3P	Open	Short-circuit	Open	Short-circuit	Open	Short-circuit	Open	Short-circuit
	Open	Open	92%	59%	84%	75%	84%	50%	75%	67%
		Short-circuit	59%	25%	50%	42%	50%	17%	42%	34%
	Short-circuit	Open	84%	50%	75%	67%	75%	42%	67%	59%
		Short-circuit	75%	42%	67%	59%	67%	34%	59%	50%

*6 Input the order to CN3D on the heat source unit whose SW4-4 is set to ON.
*7 CN3D of No. 1, 2, 3 can be selected arbitrary with the heat source unit whose SW4-4 is set to ON.

Table 4-2. Control can be achieved by using Indoor input/output connectors.

Function	Usage	Using connector	Signal
Remote/Local switching *1 ON/OFF *2*3	Indoor group can be controlled ON/OFF by an ON/OFF switching or contact input to the connector of the head Indoor in an Indoor group. It can be interlocked with timer, door, window, or other equipment to "Force stopping"	CN32	Input (level-signal)
ON/OFF *2*3	Indoor group can be controlled ON/OFF by an external pulse signal input to the connector of the head Indoor in an Indoor group.	CN51	Input (pulse-signal)
Demand	Indoor group can be controlled ON/OFF by an ON/OFF switching or contact input to the connector of every Indoor in an Indoor group.	CN52	Input (pulse-signal)
Monitoring ON/OFF state	Signal output from a head Indoor unit, presenting its Indoor group.	CN51	Output
Monitoring heating state	It can be used for monitoring or interlock with other equipment purpose and so on.	CN52	
Monitoring cooling/drying state		CN52	
Monitoring Error state Monitoring Thermo-OFF(fan) state	Signal output from every Indoor unit, for monitoring Error or Thermo-off (fan) state. It can be used for monitoring or interlock with other equipment purpose and so on.	CN51 CN52	Output

*1. When switching to Remote, control at Local remote controller will NOT be effective, but the "CENTRALLY CONTROLLED" is displayed.
*2. MA or ME remote controller is needed for this function.
*3. If using ON/OFF input function, Automatic-address-start-up can not be performed to start-up the system at commissioning.
*4. If CITY MULTI use GB-50A/AG-150A and PLC software to control the Indoor unit via its external input/output connectors, Dip Switch 1-9 and Dip Switch 1-10 should be set to ON.
In this case, the input/output connectors act as normal connectors, functions mentioned at Table 4-2 are no more available.
Details are available at the PLC software Instruction Manual.

Table 4-3. ON/OFF control to each Indoor unit (group) by using Dip Switch 9 and 10 (SW1-9, SW1-10) of the Indoor unit.

Function	Operation on Indoor units	Setting Dip Switch *1*4	
		1-9	1-10
Auto ON	All indoor units will turn ON and automatically resume to its previous mode after 5 minutes from power recovery.	OFF	ON
Auto recovery	Indoor unit recovers to its previous state (ON/OFF, mode) after 5 minutes from power recovery.	ON	OFF
All OFF	Forced stopping regardless of Indoor units' state.	OFF	OFF

*1. The Dip Switch setting should be carried out on every Indoor unit in the group.
*2. Heat source unit's power supply should NOT be cut. Otherwise, power supply to case heater of the compressor would be cut too, which may cause damage to the compressor.
*3. Above method can not be applied to the power ON/OFF of the drain pump and humidifier equipment.
*4. If CITY MULTI use GB-50A/AG-150A and PLC software to control the Indoor unit via its external input/output connectors, Dip Switch 1-9 and Dip Switch 1-10 should be set to ON.
In this case, the input/output connectors act as normal connectors, functions mentioned at Table 4-3 are no more available.

■ System example

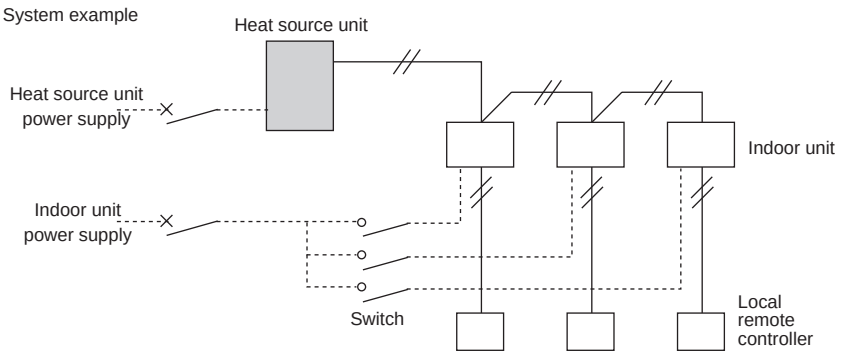

Restart of the CITY MULTI needs to be careful. When no power supply to the heat source unit, no power supply to the compressor case heater too. The compressor needed to be warmed up before running. When using above functions, power supply to the heat source unit should be ensured.

Table 4-4. How to use Remote/Local switching connector CN32

State	Local remote controller display and operation	CN32-SW-1 for Local/Remote control switching	CN32-SW-2 for Remote "ON/OFF" operation
Local remote controller control	Operation is permitted	OFF	OFF
Remote STOP	"CENTRALLY CONTROLLED" flashing, "ON/OFF" at local remote controller is not possible.	ON	OFF
Remote START	"CENTRALLY CONTROLLED" flashing, "ON/OFF" at local remote controller is not possible.	ON	ON

* For details refer to CN32 in section “4-5. Indoor unit “-E” type input/output connector”.

Table 4-5. Limitations to combining system controls

	Description		Control combining distant/local	Pulse ON/OFF	Power ON/OFF	Automatic recover
1	Control combining distant/local	CN32	-	×*1	×*1	×*1
2	Pulse ON/OFF	CN51		-	O	O
3	HA ON/OFF(JEMA)	CN51			O	O
4	Power ON/OFF	-			-	×
5	Automatic recover	-				-

*1. Pulse ON/OFF, power ON/OFF and automatic recover can only be used when the remote/local setting CN32 is set to local.
Therefore, always avoid this function when combining control.

4-4. Heat source unit input/output connector

⚠ Caution:	1.Wiring should be covered by insulation tube with supplementary insulation. 2.Use relays or switches with IEC or equivalent standard. 3.The electric strength between accessible parts and control circuit should have 2750V or more.

4-4-1. Output

• State (CN51)

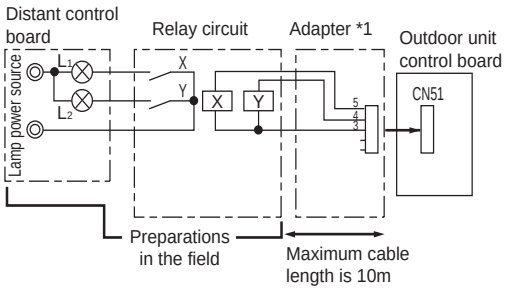

L1 : Heat source unit error display lamp
L2 : Compressor operation lamp (compressor running state)
X, Y : Relay (coil =<0.9W : 12VDC)

*1. Optional part : PAC-SC37SA-E or field supply.

4-4-2. Input

(1) Step demand and Low noise mode (CN3D)

For details, refer to "Table 4-1-1".

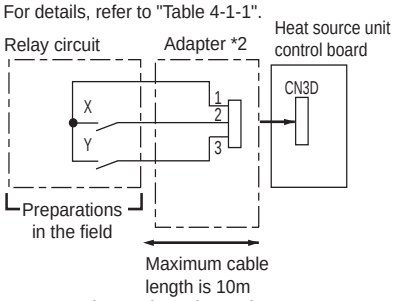

X : Low noise mode or demand
Y : Demand
X,Y : Relay Contact rating voltage >= 15VDC
Contact rating current >= 0.1A
Minimum appicable load =< 1mA at DC
*2. Optional part : PAC-SC36NA-E or field supply.

(2) Low noise mode (CN3D + DipSW4-4 OFF)

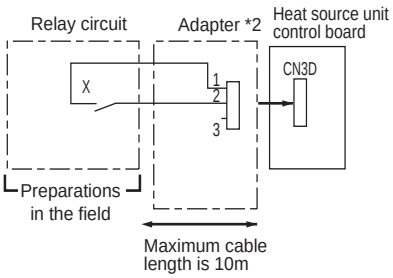

X : Relay Contact rating voltage >= 15VDC
Contact rating current >= 0.1A
Minimum applicable load =< 1mA at DC
*2. Optional part : PAC-SC36NA-E or field supply.

Low noise mode : The sound pressure level is reduced by controlling the maximum fan frequency and compressor frequency.

-Note-
The sound pressure level can not be reduced, when neither the fan frequency nor the compressor frequency are maximum.

(3) Autochangeover (CN3N) (WR2 excluded)

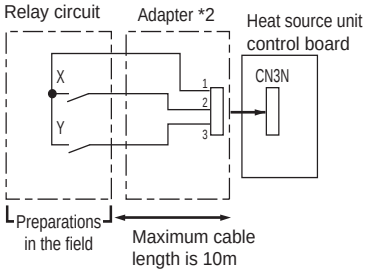

X : Cooling / Heating
Y : Validity / Invalidity of X
X,Y : Relay Contact rating voltage >= 15VDC
Contact rating current >= 0.1A
Minimum applicable load =< 1mA at DC
*2. Optional part : PAC-SC36NA-E or field supply.

		X	
		OFF	ON
Y	OFF	Normal	
	ON	Cooling	Heating

(4) Operation ON signal (TB8)

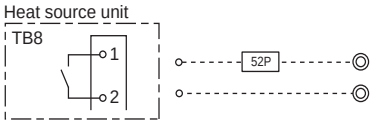

X : Relay (Contact rating 200VAC 1A)
52P : Pump contactor

(5) Pump Interlock signal input (TB8)

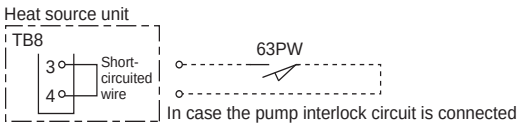

When connecting the pump interlock circuit to terminals 3 and 4 on TB8, remove the short-circuited wire.
63PW : Pressure switch (Contact: Minimum applied load 5mA)

4-5. Indoor unit "-E" type input/output connector

⚠ Caution:	1.Wiring should be covered by insulation tube with supplementary insulation. 2.Use relays or switches with IEC or equivalent standard. 3.The electric strength between accessible parts and control circuit should have 2750V or more.

● ON/OFF (Pulse) input specification

Item	Description
Input signal	Pulse sign (a connect)
Standard of pulse	200msec or more

● Input

CN51

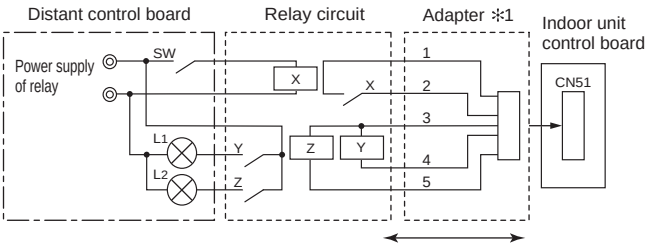

SW : Distant ON/OFF switch
L1 : Status lamp
L2 : Error lamp
X : Relay (a point of contact, fixed DC1mA)
Y, Z : Relay Contact rating voltage >= 15VDC
Contact rating current >= 0.1A
Minimum applicable load =< 1mA at DC

✻ Every time the SW is pushed (the pulse is inputted), it reacts against ON/OFF.

CN32

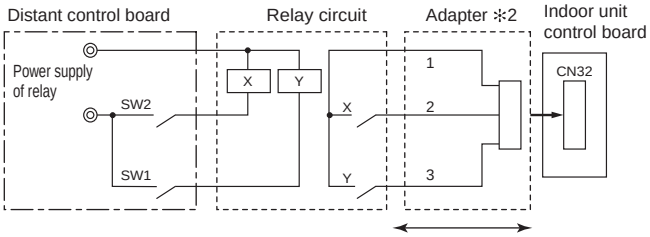

SW1 : Distant/Local switching
SW2 : ON/OFF switch
X, Y : Relay Contact rating voltage >= 15VDC
Contact rating current >= 0.1A
Minimum applicable load =< 1mA at DC

✻ SW2 is available when SW1 is ON.

CN52

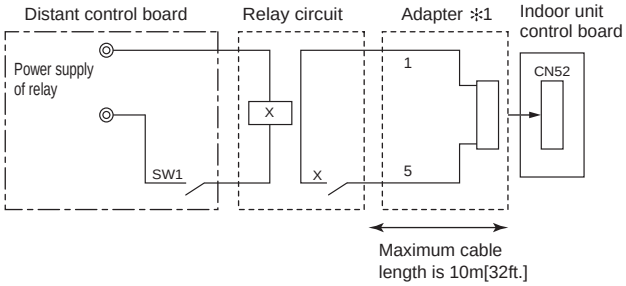

SW1 : Demand switch
X : Relay (coil <=0.9W,12VDC)

SW1	Indoor unit
ON	Forced thermo-OFF
OFF	Normal running

● Output

CN52

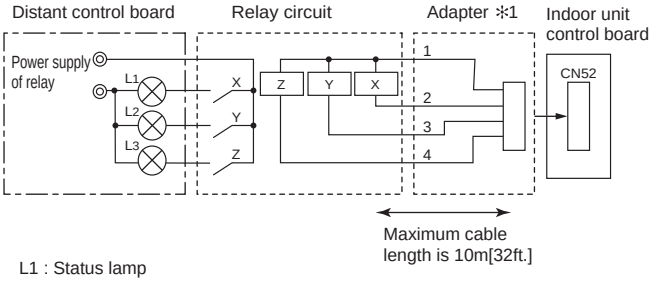

L1 : Status lamp
Fan motor output (SW1-5 OFF)
Thermostat ON (SW1-5 ON)
L2 : Cooling/Dry status lamp
L3 : Heating status lamp
X, Y, Z : Relay (Coil with fixed 12VDC, a power consumption of 0.9W or less)

✻ 1. Optional part : PAC-SA88HA-E or field supply
✻ 2. Optional part : PAC-SE55RA-E or field supply

CITY MULTI
4.SYSTEM DESIGN

SYSTEM DESIGN S SERIES ..... 4 -3

SYSTEM DESIGN Y SERIES ..... 4 -35

SYSTEM DESIGN HP SERIES ..... 4 -81

SYSTEM DESIGN R2 SERIES ..... 4 -123

SYSTEM DESIGN WY SERIES ..... 4 -169

SYSTEM DESIGN WR2 SERIES ..... 4 -207

CITY MULTI
SYSTEM DESIGN S SERIES

1. Electrical work ..... 4 - 4
   1-1.General cautions ..... 4 - 4
   1-2.Power supply for Indoor unit and Outdoor unit ..... 4 - 5
   1-3.Power cable specifications ..... 4 - 9
   1-4.Power supply examples ..... 4 - 10
2. M-NET control ..... 4 - 12
   2-1.Transmission cable length limitation ..... 4 - 12
   2-2.Transmission cable specifications ..... 4 - 13
   2-3.System configuration restrictions ..... 4 - 14
   2-4.Address setting ..... 4 - 17
3. Piping Design ..... 4 - 28
   3-1.R410A Piping material ..... 4 - 28
   3-2.Piping Design ..... 4 - 29
   3-3.Refrigerant charging calculation ..... 4 - 30
4. Outdoor Installation ..... 4 - 31
   4-1.Requirement on installation site ..... 4 - 31
   4-2.Spacing ..... 4 - 32
   4-3.Piping direction ..... 4 - 33
5. Caution for refrigerant leakage ..... 4 - 34
   5-1.Refrigerant property ..... 4 - 34
   5-2.Confirm the Critical concentration and take countermeasure ..... 4 - 34

1. Electrical work

1-1. General cautions

① Follow ordinance of your governmental organization for technical standard related to electrical equipment, wiring regulations, and guidance of each electric power company.
② Wiring for control (hereinafter referred to as transmission cable) shall be (50mm[1-5/8in.] or more) apart from power source wiring so that it is not influenced by electric noise from power source wiring. (Do not insert transmission cable and power source wire in the same conduit.)
③ Be sure to provide designated grounding work to outdoor unit.
④ Give some allowance to wiring for electrical part box of indoor and outdoor units, because the box is sometimes removed at the time of service work.
⑤ Never connect 380~415V(220~240V) power source to terminal block of transmission cable. If connected,electrical parts will be burnt out.
⑥ Use 2-core shield cable for transmission cable. If transmission cables of different systems are wired with the same multiple-core cable, the resultant poor transmitting and receiving will cause erroneous operations.

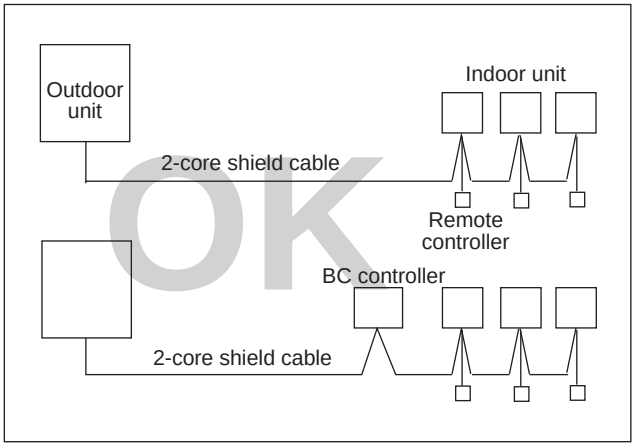

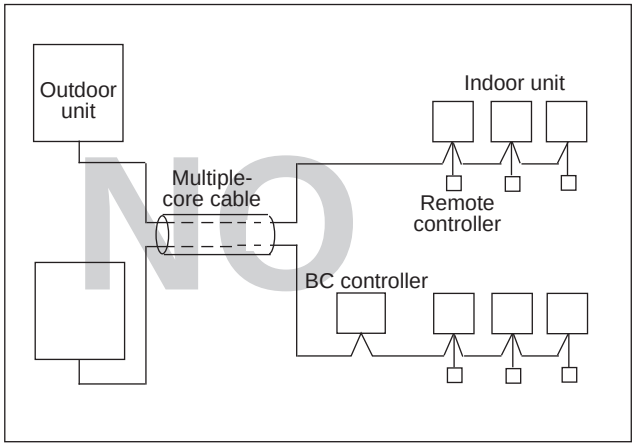

1-2. Power supply for Indoor unit and Outdoor unit

1-2-1. Electrical characteristics of Indoor unit

Symbols: MCA : Min.Circuit Amps (=1.25xFLA) FLA : Full Load Amps
IFM :Indoor Fan Motor Output : Fan motor rated output

PMFY-P-VBM-E	Power supply			IFM	
	Volts / Hz	Range +-10%	MCA(A)	Output(kW)	FLA(A)
PMFY-P20VBM-E	220-240V / 50Hz 220V / 60Hz	Max.: 264V Min.: 198V	0.25	0.028	0.20
PMFY-P25VBM-E			0.26	0.028	0.21
PMFY-P32VBM-E			0.26	0.028	0.21
PMFY-P40VBM-E			0.33	0.028	0.26

PLFY-P-VCM-E	Power supply			IFM	
	Volts / Hz	Range +-10%	MCA(A)	Output(kW)	FLA(A)
PLFY-P20VCM-E	220-240V / 50Hz	Max.: 264V Min.: 198V	0.29	0.011	0.23
PLFY-P25VCM-E			0.29	0.015	0.23
PLFY-P32VCM-E			0.35	0.020	0.28
PLFY-P40VCM-E			0.35	0.020	0.28

PLFY-P-VBM-E	Power supply			IFM	
	Volts / Hz	Range +-10%	MCA(A)	Output(kW)	FLA(A)
PLFY-P32VBM-E	220-240V / 50Hz 220V / 60Hz	Max.: 264V Min.: 198V	0.28	0.050	0.22
PLFY-P40VBM-E			0.36	0.050	0.29
PLFY-P50VBM-E			0.36	0.050	0.29
PLFY-P63VBM-E			0.45	0.050	0.36
PLFY-P80VBM-E			0.64	0.050	0.51
PLFY-P100VBM-E			1.25	0.120	1.00
PLFY-P125VBM-E			1.34	0.120	1.07

PLFY-P-VLMD-E	Power supply			IFM	
	Volts / Hz	Range +-10%	MCA(A) (50 / 60Hz)	Output(kW)	FLA(A) (50 / 60Hz)
PLFY-P20VLMD-E	220-240V / 50Hz 220-230V / 60Hz	Max.: 264V Min.: 198V	0.45 / 0.46	0.015	0.36 / 0.37
PLFY-P25VLMD-E			0.45 / 0.46	0.015	0.36 / 0.37
PLFY-P32VLMD-E			0.45 / 0.46	0.015	0.36 / 0.37
PLFY-P40VLMD-E			0.50 / 0.53	0.015	0.40 / 0.42
PLFY-P50VLMD-E			0.51 / 0.54	0.020	0.41 / 0.43
PLFY-P63VLMD-E			0.61 / 0.64	0.020	0.49 / 0.51
PLFY-P80VLMD-E			0.90 / 0.93	0.020	0.72 / 0.74
PLFY-P100VLMD-E			0.94 / 1.10	0.030	0.75 / 0.88
PLFY-P125VLMD-E			1.69 / 1.69	0.078x2	1.35 / 1.35

PEFY-P-VMR-E-L/R	Power supply			IFM	
	Volts / Hz	Range +-10%	MCA(A) (50 / 60Hz)	Output(kW)	FLA(A) (50 / 60Hz)
PEFY-P20VMR-E-L/R	220-240V / 50Hz 220-230V / 60Hz	Max.: 264V Min.: 198V	0.37 / 0.37	0.018	0.29 / 0.29
PEFY-P25VMR-E-L/R			0.37 / 0.37	0.018	0.29 / 0.29
PEFY-P32VMR-E-L/R			0.43 / 0.48	0.023	0.34 / 0.38

PEFY-P-VMS1-E	Power supply			IFM	
	Volts / Hz	Range +-10%	MCA(A) (50 / 60Hz)	Output(kW)	FLA(A) (50 / 60Hz)
PEFY-P15VMS1-E	220-240V / 50Hz 220-240V / 60Hz	Max.: 264V Min.: 198V	0.63 / 0.63	0.096	0.50 / 0.50
PEFY-P20VMS1-E			0.70 / 0.70	0.096	0.56 / 0.56
PEFY-P25VMS1-E			0.75 / 0.75	0.096	0.60 / 0.60
PEFY-P32VMS1-E			0.75 / 0.75	0.096	0.60 / 0.60
PEFY-P40VMS1-E			0.83 / 0.82	0.096	0.66 / 0.65
PEFY-P50VMS1-E			1.02 / 1.00	0.096	0.81 / 0.80
PEFY-P63VMS1-E			1.08 / 1.07	0.096	0.86 / 0.85

Symbols: MCA : Min.Circuit Amps (=1.25xFLA) FLA : Full Load Amps
IFM :Indoor Fan Motor Output : Fan motor rated output

PEFY-P-VMS1L-E	Power supply			IFM	
	Volts / Hz	Range +-10%	MCA(A) (50 / 60Hz)	Output(kW)	FLA(A) (50 / 60Hz)
PEFY-P15VMS1L-E	220-240V / 50Hz 220-240V / 60Hz	Max.: 264V Min.: 198V	0.46 / 0.46	0.096	0.37 / 0.37
PEFY-P20VMS1L-E			0.54 / 0.54	0.096	0.43 / 0.43
PEFY-P25VMS1L-E			0.59 / 0.59	0.096	0.47 / 0.47
PEFY-P32VMS1L-E			0.59 / 0.59	0.096	0.47 / 0.47
PEFY-P40VMS1L-E			0.68 / 0.68	0.096	0.54 / 0.54
PEFY-P50VMS1L-E			0.84 / 0.84	0.096	0.67 / 0.67
PEFY-P63VMS1L-E			0.91 / 0.91	0.096	0.73 / 0.73

PEFY-P-VMH-E	Power supply			IFM	
	Volts / Hz	Range +-10%	MCA(A) (50 / 60Hz)	Output(kW)	FLA(A) (50 / 60Hz)
PEFY-P40VMH-E	220-240V / 50Hz 220-240V / 60Hz	Max.: 264V Min.: 198V	1.21 / 1.61	0.08	0.97 / 1.29
PEFY-P50VMH-E			1.21 / 1.61	0.08	0.97 / 1.29
PEFY-P63VMH-E			1.49 / 1.95	0.12	1.19 / 1.56
PEFY-P71VMH-E			1.58 / 2.18	0.14	1.26 / 1.74
PEFY-P80VMH-E			1.85 / 2.40	0.18	1.48 / 1.92
PEFY-P100VMH-E			3.03 / 3.93	0.26	2.42 / 3.14
PEFY-P125VMH-E			3.03 / 3.93	0.26	2.42 / 3.14
PEFY-P140VMH-E			3.10 / 3.98	0.26	2.48 / 3.18
PEFY-P200VMH-E	380-415V / 50Hz 380-415V / 60Hz	Max.: 456V Min.: 342V	2.03 / 2.33	0.76	1.62 / 1.86
PEFY-P250VMH-E			2.50 / 2.88	1.08	2.00 / 2.30

PEFY-P-VMA-E	Power supply			IFM	
	Volts / Hz	Range +-10%	MCA(A)	Output(kW)	FLA(A)
PEFY-P20VMA-E	220-240V / 50Hz 220-240V / 60Hz	Max.: 264V Min.: 198V	1.03	0.085	0.82
PEFY-P25VMA-E			1.03	0.085	0.82
PEFY-P32VMA-E			1.18	0.085	0.95
PEFY-P40VMA-E			1.43	0.085	1.14
PEFY-P50VMA-E			1.54	0.085	1.23
PEFY-P63VMA-E			2.22	0.121	1.78
PEFY-P71VMA-E			2.46	0.121	1.97
PEFY-P80VMA-E			2.47	0.121	1.98
PEFY-P100VMA-E			3.30	0.244	2.64
PEFY-P125VMA-E			3.39	0.244	2.71
PEFY-P140VMA-E			3.29	0.244	2.63

PEFY-P-VMAL-E	Power supply			IFM	
	Volts / Hz	Range +-10%	MCA(A)	Output(kW)	FLA(A)
PEFY-P20VMAL-E	220-240V / 50Hz 220-240V / 60Hz	Max.: 264V Min.: 198V	0.92	0.085	0.74
PEFY-P25VMAL-E			0.92	0.085	0.74
PEFY-P32VMAL-E			1.07	0.085	0.86
PEFY-P40VMAL-E			1.32	0.085	1.06
PEFY-P50VMAL-E			1.40	0.085	1.12
PEFY-P63VMAL-E			2.08	0.121	1.67
PEFY-P71VMAL-E			2.32	0.121	1.86
PEFY-P80VMAL-E			2.36	0.121	1.89
PEFY-P100VMAL-E			3.19	0.244	2.55
PEFY-P125VMAL-E			3.27	0.244	2.62
PEFY-P140VMAL-E			3.17	0.244	2.53

PEFY-P-VMH-E-F	Power supply			IFM	
	Volts / Hz	Range +-10%	MCA(A) (50 / 60Hz)	Output(kW)	FLA(A) (50 / 60Hz)
PEFY-P80VMH-E-F	220-240V / 50Hz 208-230V / 60Hz	Max.: 264V Min.: 187V	0.92 / 1.15	0.09	0.73 / 0.92
PEFY-P140VMH-E-F			1.58 / 1.84	0.14	1.26 / 1.47
PEFY-P200VMH-E-F	380-415V / 50Hz 380-415V / 60Hz	Max.: 456V Min.: 342V	0.73 / 0.93	0.20	0.58 / 0.74
PEFY-P250VMH-E-F			0.85 / 1.08	0.23	0.68 / 0.86

Symbols: MCA : Min.Circuit Amps (=1.25xFLA) FLA : Full Load Amps
IFM :Indoor Fan Motor Output : Fan motor rated output

PKFY-P-VBM-E	Power supply			IFM	
	Volts / Hz	Range +-10%	MCA(A)	Output(kW)	FLA(A)
PKFY-P15VBM-E	220-240V / 50Hz 220V / 60Hz	Max.: 264V Min.: 198V	0.25	0.017	0.20
PKFY-P20VBM-E			0.25	0.017	0.20
PKFY-P25VBM-E			0.25	0.017	0.20

PKFY-P-VHM-E	Power supply			IFM	
	Volts / Hz	Range +-10%	MCA(A)	Output(kW)	FLA(A)
PKFY-P32VHM-E	220-240V / 50Hz 220V / 60Hz	Max.: 264V Min.: 198V	0.38	0.030	0.30
PKFY-P40VHM-E			0.38	0.030	0.30
PKFY-P50VHM-E			0.38	0.030	0.30

PKFY-P-VKM-E	Power supply			IFM	
	Volts / Hz	Range +-10%	MCA(A)	Output(kW)	FLA(A)
PKFY-P63VKM-E	220-240V / 50Hz 220V / 60Hz	Max.: 264V Min.: 198V	0.36	0.056	0.29
PKFY-P100VKM-E			0.63	0.056	0.50

PCFY-P-VKM-E	Power supply			IFM	
	Volts / Hz	Range +-10%	MCA(A)	Output(kW)	FLA(A)
PCFY-P40VKM-E	220-240V / 50Hz 220V / 60Hz	Max.: 264V Min.: 198V	0.35	0.090	0.28
PCFY-P63VKM-E			0.41	0.095	0.33
PCFY-P100VKM-E			0.81	0.160	0.65
PCFY-P125VKM-E			0.95	0.160	0.76

PFFY-P-VKM-E	Power supply			IFM	
	Volts / Hz	Range +-10%	MCA(A)	Output(kW)	FLA(A)
PFFY-P20VKM-E	220-240V / 50Hz	Max.: 264V Min.: 198V	0.25	0.03x2	0.20
PFFY-P25VKM-E			0.25	0.03x2	0.20
PFFY-P32VKM-E			0.25	0.03x2	0.20
PFFY-P40VKM-E			0.30	0.03x2	0.24

PFFY-P-VLEM-E	Power supply			IFM	
	Volts / Hz	Range +-10%	MCA(A) (50 / 60Hz)	Output(kW)	FLA(A) (50 / 60Hz)
PFFY-P20VLEM-E	220-240V / 50Hz 208-230V / 60Hz	Max.: 264V Min.: 187V	0.24 / 0.31	0.015	0.19 / 0.25
PFFY-P25VLEM-E			0.24 / 0.31	0.015	0.19 / 0.25
PFFY-P32VLEM-E			0.36 / 0.38	0.018	0.29 / 0.30
PFFY-P40VLEM-E			0.40 / 0.41	0.030	0.32 / 0.33
PFFY-P50VLEM-E			0.50 / 0.51	0.035	0.40 / 0.41
PFFY-P63VLEM-E			0.58 / 0.59	0.050	0.46 / 0.47

Symbols: MCA : Min.Circuit Amps (=1.25xFLA) FLA : Full Load Amps
IFM :Indoor Fan Motor Output : Fan motor rated output

PFFY-P-VLRM-E	Power supply			IFM	
	Volts / Hz	Range +-10%	MCA(A) (50 / 60Hz)	Output(kW)	FLA(A) (50 / 60Hz)
PFFY-P20VLRM-E	220-240V / 50Hz 208-230V / 60Hz	Max.: 264V Min.: 187V	0.24 / 0.31	0.015	0.19 / 0.25
PFFY-P25VLRM-E			0.24 / 0.31	0.015	0.19 / 0.25
PFFY-P32VLRM-E			0.36 / 0.38	0.018	0.29 / 0.30
PFFY-P40VLRM-E			0.40 / 0.41	0.030	0.32 / 0.33
PFFY-P50VLRM-E			0.50 / 0.51	0.035	0.40 / 0.41
PFFY-P63VLRM-E			0.58 / 0.59	0.050	0.46 / 0.47

PFFY-P-VLRMM-E	Power supply			IFM	
	Volts / Hz	Range +-10%	MCA(A) (50 / 60Hz)	Output(kW)	FLA(A) (50 / 60Hz)
PFFY-P20VLRMM-E	220-240V / 50Hz	Max.: 264V Min.: 198V	0.59 / 0.58	0.096	0.47 / 0.46
PFFY-P25VLRMM-E			0.59 / 0.58	0.096	0.47 / 0.46
PFFY-P32VLRMM-E			0.69 / 0.69	0.096	0.55 / 0.55
PFFY-P40VLRMM-E			0.78 / 0.76	0.096	0.62 / 0.61
PFFY-P50VLRMM-E			0.80 / 0.79	0.096	0.64 / 0.63
PFFY-P63VLRMM-E			0.93 / 0.93	0.096	0.74 / 0.74

GUF-RDH3	Power supply			IFM	
	Volts / Hz	Range +-10%	MCA(A) (50 / 60Hz)	Output(kW)	FLA(A) (50 / 60Hz)
GUF-50RD(H)3	220-240V / 50Hz 220V / 60Hz	Max.: 264V Min.: 198V	1.85 / 1.85	0.081x2	1.48 / 1.48
GUF-100RD(H)3			3.49 / 3.49	0.16x2	2.79 / 2.79

1-2-2. Electrical characteristics of Outdoor unit at cooling mode

PUMY-P-YHMB	Units			Power supply	Compressor		FAN	RLA (A)
	Hz	Volts	Voltage range	MCA(A)	Output (kW)	SC (A)	Output (kW)	
PUMY-P100YHMB	50	380 400 415	Max : 456V Min : 342V	13	1.9	7	0.06 x 2	5.81/5.52/5.32
PUMY-P125YHMB				13	2.4	7	0.06 x 2	6.87/6.52/6.29
PUMY-P140YHMB				13	2.9	7	0.06 x 2	8.51/8.09/7.80

PUMY-P-VHMB	Units				Power supply	Compressor		FAN	RLA (A)
	Hz	Volts	Voltage range		MCA(A)	Output (kW)	SC (A)	Output (kW)	
PUMY-P100VHMB	50/60	220 230 240	50Hz Max : 264V Min : 198V	60Hz Max : 242 Min : 198V	29.5	2.2	14	0.06 x 2	16.9/16.2/15.5
PUMY-P125VHMB					29.5	2.9	14	0.06 x 2	20.0/19.1/18.3
PUMY-P140VHMB					29.5	3.3	14	0.06 x 2	25.8/24.7/23.6

1-3. Power cable specifications

Thickness of wire for main power supply, capacities of the switch and system impedance

	Model	Minimum wire thickness (mm^2)			Breaker for current leakage	Local swtich (A)		Breaker for wiring (NFB) (A)	Max..Permissive System Impedance
		Main cable	Branch	Ground		Capacity	Fuse		
Outdoor unit	PUMY-P100YHMB	1.5	-	1.5	16A 30mA 0.1sec. or less	16	16	16	-
	PUMY-P125YHMB	1.5	-	1.5	16A 30mA 0.1sec. or less	16	16	16	-
	PUMY-P140YHMB	1.5	-	1.5	16A 30mA 0.1sec. or less	16	16	16	-
	PUMY-P100VHMB	5.5 or 6.0	-	5.5 or 6.0	32A 30mA 0.1sec. or less	32	32	32	-
	PUMY-P125VHMB	5.5 or 6.0	-	5.5 or 6.0	32A 30mA 0.1sec. or less	32	32	32	-
	PUMY-P140VHMB	5.5 or 6.0	-	5.5 or 6.0	32A 30mA 0.1sec. or less	32	32	32	-
Total operating current of the indoor unit		1.5	1.5	1.5	20A 30mA 0.1sec. or less	16	16	20	-

1. Use dedicated power supplies for the outdoor unit and indoor unit.
2. Bear in mind ambient conditions (ambient temperature,direct sunlight, rain water,etc.) when proceeding with the wiring and connections.
3. The wire size is the minimum value for metal conduit wiring. If the voltage drops, use a wire that is one rank thicker in diameter. Make sure the power-supply voltage does not drop more than 10%.
4. Specific wiring requirements should adhere to the wiring regulations of the region.
5. Power supply cords of parts of appliances for outdoor use shall not be lighter than polychloroprene sheathed flexible cord (design 245 IEC57). For example, use wiring such as YZW.
6. A switch with at least 3 mm contact separation in each pole shall be provided by the Air Conditioner installer.

⚠WARNING

- Be sure to use specified wires for connections and ensure no external force is imparted to terminal connections. If connections are not fixed firmly, heating or fire may result.
- Be sure to use the appropriate type of overcurrent protection switch. Note that generated overcurrent may include some amount of direct current.

⚠CAUTION

- Some installation sites may require attachment of an earth leakage breaker for the inverter. If no earth leakage breaker is installed, there is a danger of electric shock.
- Do not use anything other than a breaker and fuse with the correct capacity. Using a fuse or wire of too large capacity may cause malfunction or fire.

Note

- This device is intended for the connection to a power supply system with a maximum permissible system impedance shown in the above table at the interface point (power service box) of the user's supply.
- The user must ensure that this device is connected only to a power supply system which fulfils the requirement above.
  If necessary, the user can ask the public power supply company for the system impedance at the interface point.

System S

1-4. Power supply examples

The local standards and/or regulations is applicable at a higher priority.

1-4-1. PUMY-P100,125,140YHMB

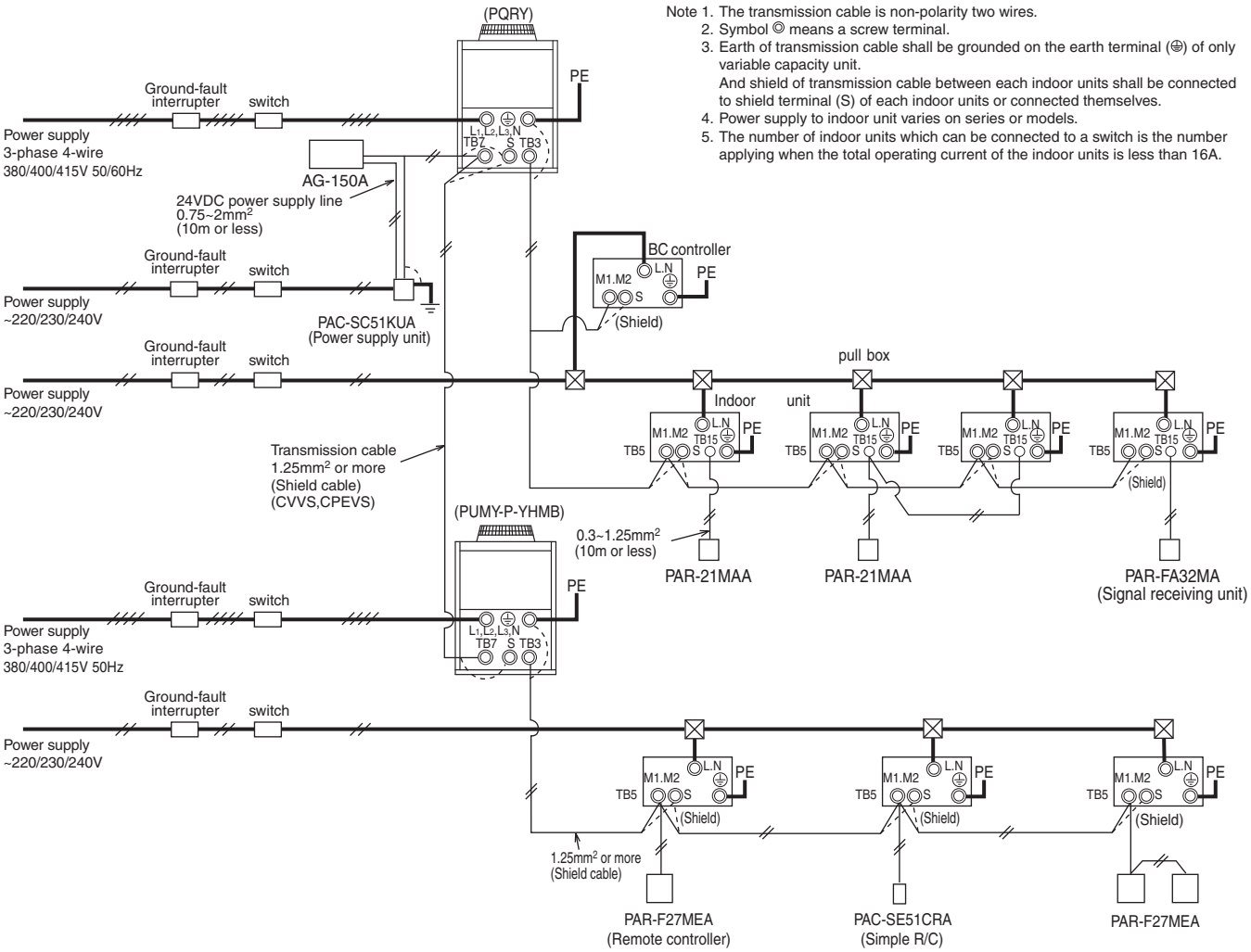

The local standards and/or regulations is applicable at a higher priority.

1-4-2. PUMY-P100,125,140VHMB

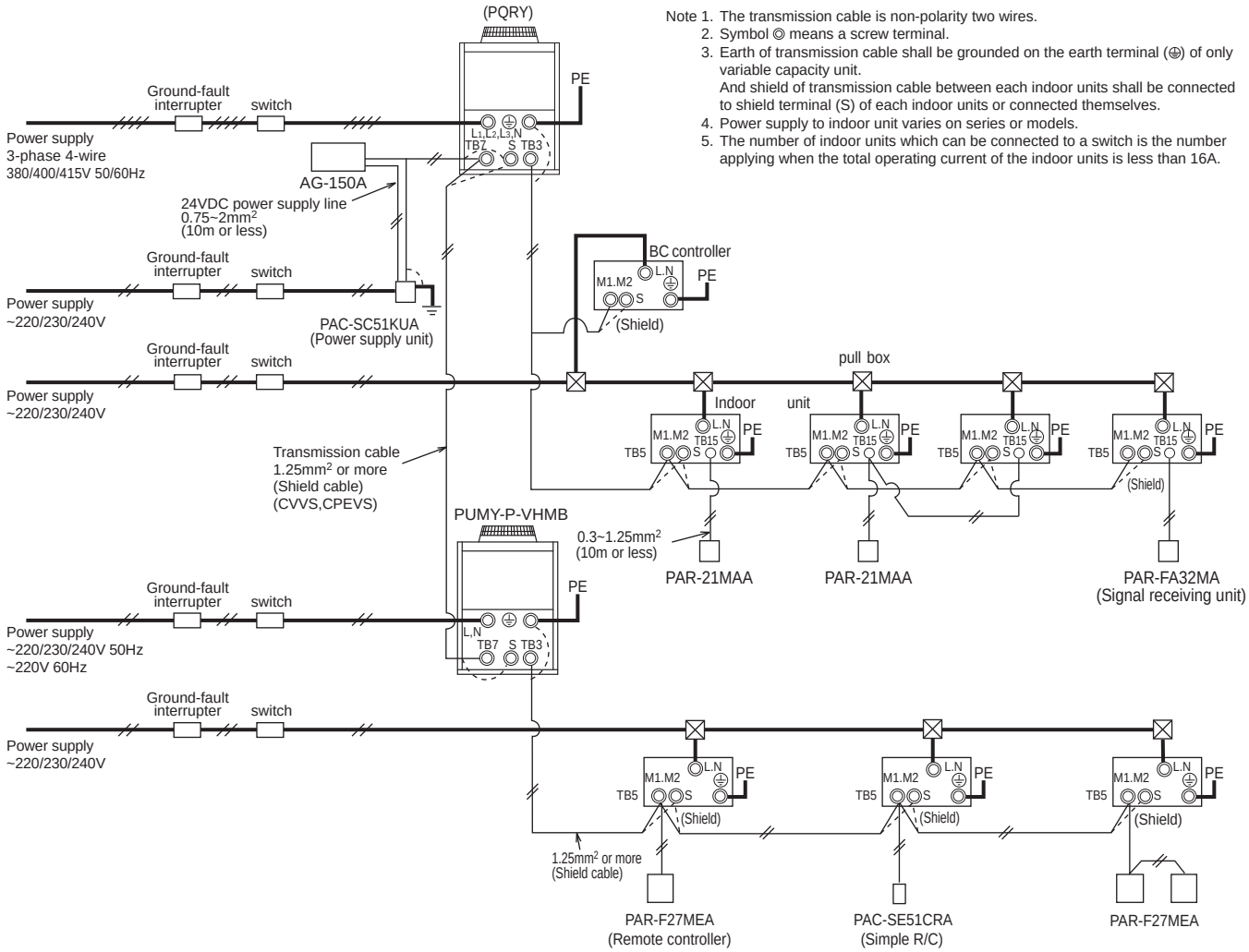

Note 1. The transmission cable is non-polarity two wires.
2. Symbol ◎ means a screw terminal.
3. Earth of transmission cable shall be grounded on the earth terminal (⏚) of only variable capacity unit.
And shield of transmission cable between each indoor units shall be connected to shield terminal (S) of each indoor units or connected themselves.
4. Power supply to indoor unit varies on series or models.
5. The number of indoor units which can be connected to a switch is the number applying when the total operating current of the indoor units is less than 16A.

System S

2-1. Transmission cable length limitation

2-1-1. Using MA Remote controller

Long transmission cable causes voltage down, therefore, the length limitation should be obeyed to secure proper transmission.

Max. length via Outdoor (M-NET cable)	L1+L2+L3+L4, L1+L2+L6+L7, L3+L4+L6+L7	<=500m[1640ft]	1.25mm^2 [AWG16] or thicker
Max. length to Outdoor (M-NET cable)	L1, L3+L4, L6, L2+L6, L7	<=200m[656ft]	1.25mm^2 [AWG16] or thicker
Max. length from MA to Indoor	a1+a2, a1+a2+a3+a4	<=200m[656ft]	-
24VDC to AG-150A	n	<=50m[164ft]	0.75-2.0 mm^2 [AWG18-14]

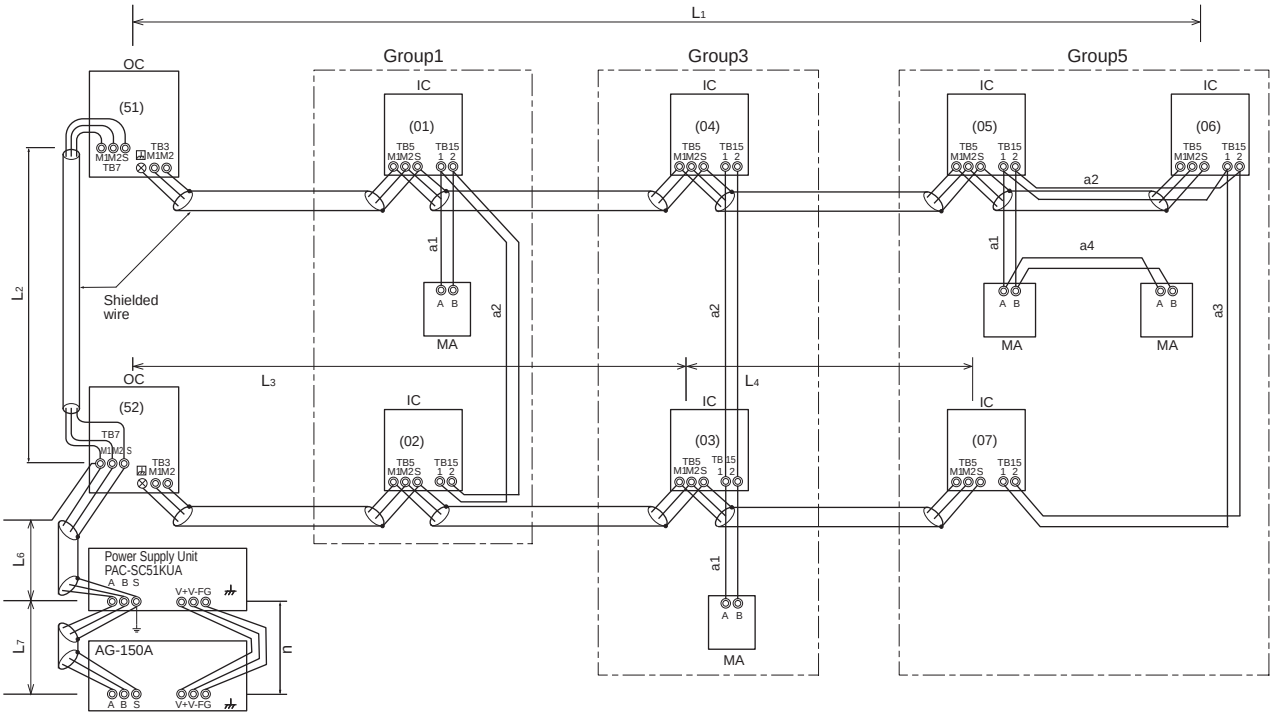

OC: Outdoor unit; IC: Indoor unit; MA: MA remote controller

2-1-2. Using ME Remote controller

Long transmission cable causes voltage down, therefore, the length limitation should be obeyed to secure proper transmission.

Max. length via Outdoor (M-NET cable)	L1+L2+L3+L4, L1+L2+L6+L7,L1+L2+L3+L5, L3+L4+L6+L7	<=500m[1640ft]	1.25mm^2 [AWG16] or thicker
Max. length to Outdoor (M-NET cable)	L1, L3+L4, L6, L2+L6, L7, L3+L5	<=200m[656ft]	1.25mm^2 [AWG16] or thicker
Max. length from ME to Indoor	e1,e2+e3,e4	<=10m[32ft] *1	0.3-1.25mm^2 [AWG22-16] *1
24VDC to AG-150A	n	<=50m[164ft]	0.75-2.0 mm^2 [AWG18-14]

*1. If the length from ME to Indoor exceed 10m, use 1.25 mm^2[AWG16] shielded cable, but the total length should be counted into Max. length via Outdoor.

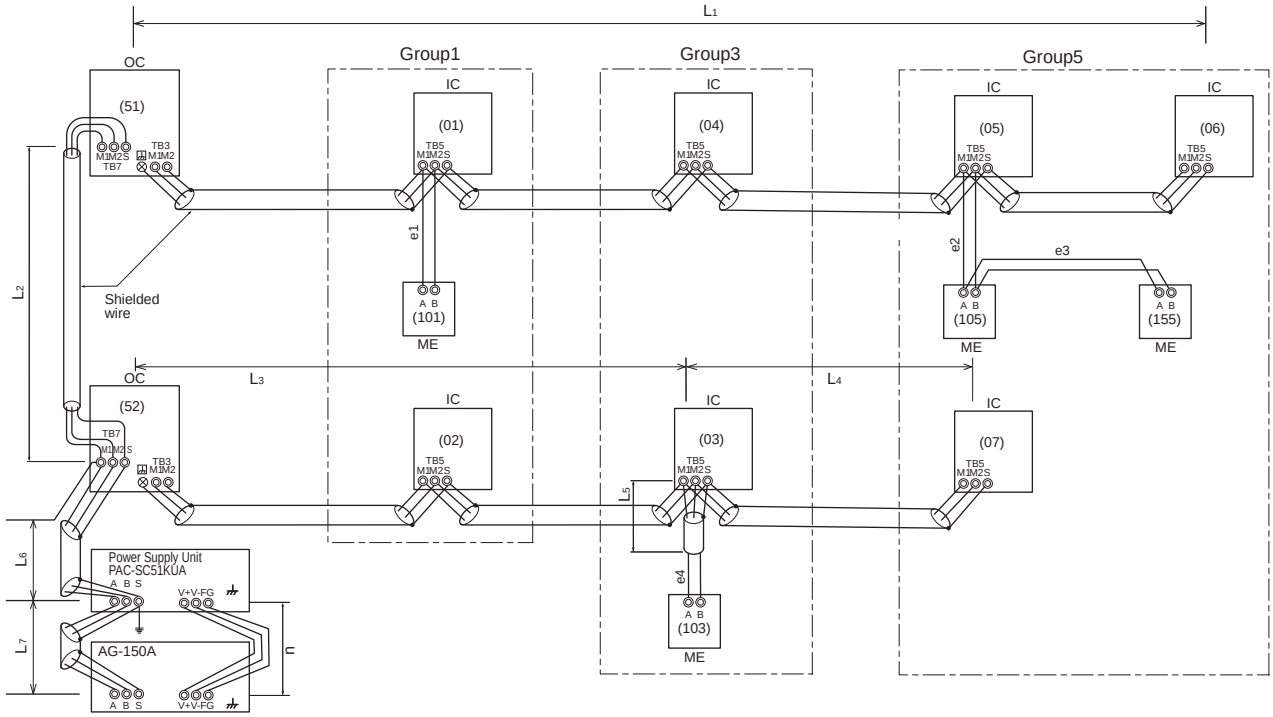

OC: Outdoor unit; IC: Indoor unit; ME: ME remote controller

2-2. Transmission cable specifications

	Transmission cables (Li)	ME Remote controller cables	MA Remote controller cables
Type of cable	Shielding wire (2-core) CVVS, CPEVS or MVVS	Sheathed 2-core cable (unshielded) CVV	
Cable size	More than 1.25mm^2 [AWG16]	0.3～1.25mm^2 [AWG22～16] (0.75～1.25mm^2 [AWG18～16])*1	0.3～1.25mm^2 [AWG22～16] (0.75～1.25mm^2 [AWG18～16])*1
Remarks	—	When 10m [32ft] is exceeded, use cables with the same specification as transmission cables.	Max length : 200m [656ft]

*1 Connected with simple remote controller.

CVVS, MVVS : PVC insulated PVC jacketed shielded control cable
CPEVS : PE insulated PVC jacketed shielded communication cable
CVV : PV insulated PVC sheathed control cable

2-3. System configuration restrictions

2-3-1. Common restrictions for the CITYMULTI system

For each Outdoor unit, the maximum connectable quantity of Indoor unit is specified at its Specifications table.

A) 1 Group of Indoor units can have 1-16 Indoor units;
*OA processing unit GUF-RD(H) is considered as Indoor unit.

B) Maximum 2 remote controllers for 1 Group; (MA/ME remote controllers cannot be present together in 1group.)

C) 1 LOSSNAY unit can interlock maximum 16 Indoor units; 1 Indoor unit can interlock only 1 LOSSNAY unit.

D) Maximum 3 System controllers are connectable when connecting to TB3 of the Outdoor unit.

E) Maximum 3 System controllers are connectable when connecting to TB7 of the Outdoor unit, if the transmission power is supplied by the Outdoor unit.

F) 4 System controllers or more are connectable when connecting to TB7 of the Outdoor unit, if the transmission power is supplied by the power supply unit PAC-SC51KUA. Details refer to 2-3-3-C.
*System controller connected as described in D) and E) would have a risk that the failure of connected Outdoor unit would stop power supply to the System controller.

2-3-2. Ensuring proper communication power for M-NET

In order to ensure proper communication among Outdoor unit, Indoor unit, LOSSNAY, and OA processing unit GUF-RD(H), and Controllers, the transmission power situation for the M-NET should be observed. In some cases, Transmission booster should be used. Taking the power consumption of Indoor unit sized P20-P140 as 1, the equivalent power consumption or supply of others are listed at Table 2-3-1 and Table 2-3-2.

Table 2-3-1 The equivalent power consumption

Indoor, OA unit	Indoor unit	BC controller	MA RC. LOSSNAY	ME Remote Contr.	Timers, System Contr.		ON/OFF Contr.	MN Conrerter	
Sized P15-P140 GUF-50, 100	Sized P200,P250	CMB	PAR-21MAA PAC-YT51CRA(B) PAR-FA32MA LGH-RX-E PZ-60DR-E	PAR-F27MEA PAC-SE51CRA PZ-52SF-E	PAC-SC30GRA PAC-SF44SRA PAC-YT34STA AG-150A	GB-50A	PAC-YT40ANRA	CMS -MNF-B	CMS -MNG-E
1	7	2	0	1/4	1/2	3	1	1/2	2

*RC : Remote Controller

Table 2-3-2 The equivalent power supply

Transmission Booster	Power supply unit	Expansion controller	BM ADAPTER	Outdoor unit	Outdoor unit
PAC-SF46EPA	PAC-SC51KUA	PAC-YG50ECA	BAC-HD150	Connector TB3 and TB7 total *	Connector TB7 only
25	5	6	6	32	6

*If PAC-SC51KUA is used to supply power at TB7 side, no power supply need from Outdoor unit at TB7, Connector TB3 itself will therefore have 32. Not applicable to the PUMY model.

With the equivalent power consumption values in Table 2-3-1 and Table 2-3-2, PAC-SF46EPA can be designed into the air-conditioner system to ensure proper system communication according to 2-3-2-A, B, C.

2-3-2-A) Firstly, count from TB3 at TB3 side the total quantity of Indoor units, OA process units and ME remote controller, Timers and System controllers. If the total quantity reaches 40, a PAC-SF46EPA should be set. In this case, Indoor unit sized P200, 250 is counted as 7 Indoor units, but MA remote controller(s), LOSSNAY, PZ-60DR-E is NOT counted.

2-3-2-B) Secondly, count from TB7 side to TB3 side the total transmission power consumption. If the total power consumption reaches 32, a PAC-SF46EPAshould be set. Yet, if a PAC-SC51KUAis used to supply power at TB7 side, count from TB3 side only.

2-3-2-C) Thirdly, count from TB7 at TB7 side the total transmission power consumption, If the total power consumption reaches 6, a PAC-SF46EPA should be set.

■ System example

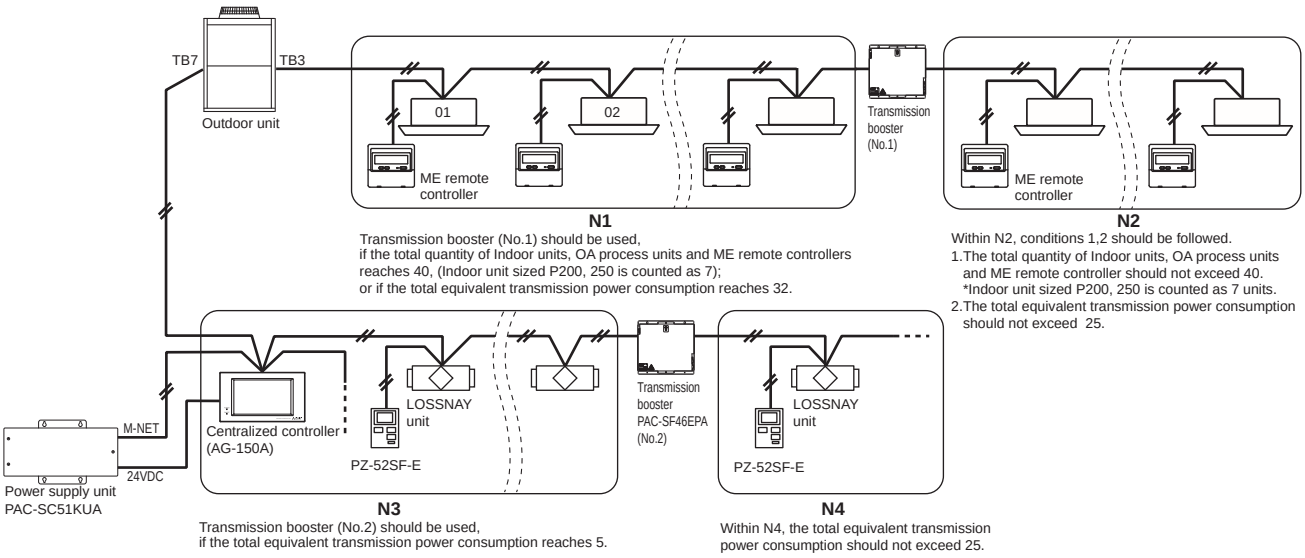

2-3-3. Ensuring proper power supply to System controller

The power to System controller (excluding LMAP02-E) is supplied via M-NET transmission line. M-NET transmission line at TB7 side is called Centralized control transmission line while one at TB3 side is called Indoor-Outdoor transmission line. There are 3 ways to supply power to the System controller .
A) Connecting to TB3 of the Outdoor unit and receiving power from the Outdoor unit.
B) Connecting to TB7 of the Outdoor unit and receiving power from the Outdoor unit.
C) Connecting to TB7 of the Outdoor unit but receiving power from power supply unit PAC-SC51KUA.

2-3-3-A. When connecting to TB3 of the Outdoor unit and receiving power from the Outdoor unit.

Maximum 3 System controllers can be connected to TB3.
If there is more than 1 Outdoor unit, it is necessary to replace power supply switch connector CN41 with CN40 on one Outdoor unit.

Fig. 2-3-3-A

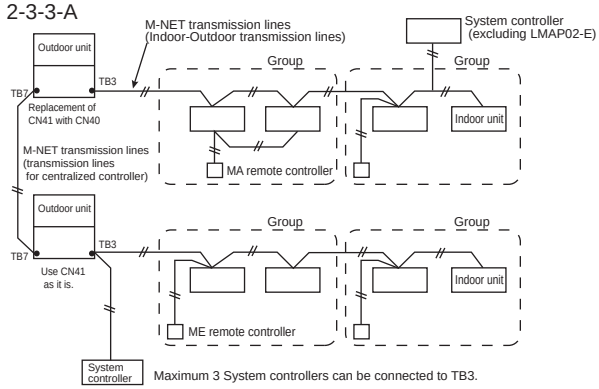

2-3-3-B. When connecting to TB7 of the Outdoor unit and receiving power from the Outdoor unit.

Maximum 3 System controllers can be connected to TB7 and receiving power from the Outdoor unit.
It is necessary to replace power supply switch connector CN41 with CN40 on one Outdoor unit.

Fig. 2-3-3-B

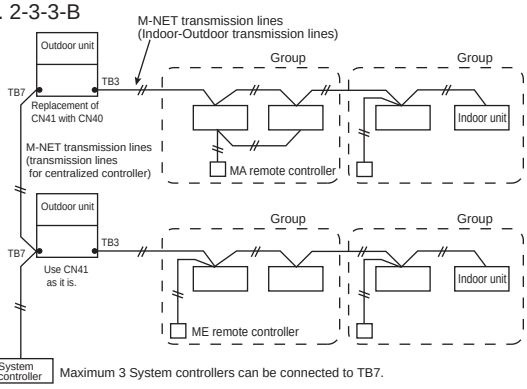

2-3-3-C. When connecting to TB7 of the Outdoor unit but receiving power from PAC-SC51KUA.

When using PAC-SC51KUA to supply transmission power, the power supply connector CN41 on the Outdoor units should be kept as it is. It is also a factory setting.
1 PAC-SC51KUA supports maximum 1 AG-150A unit due to the limited power 24VDC at its TB3.
However, 1 PAC-SC51KUA supplies transmission power at its TB2 equal to 5 Indoor units, which is referable at Table 2-3-2.
If PZ-52SF-E, Timers, System controller, ON/OFF controller connected to TB7 consume transmission power more than 5 (Indoor units), Transmission booster PAC-SF46EPA is needed. PAC-SF46EPA supplies transmission power equal to 25 Indoor units.

Fig. 2-3-3-C

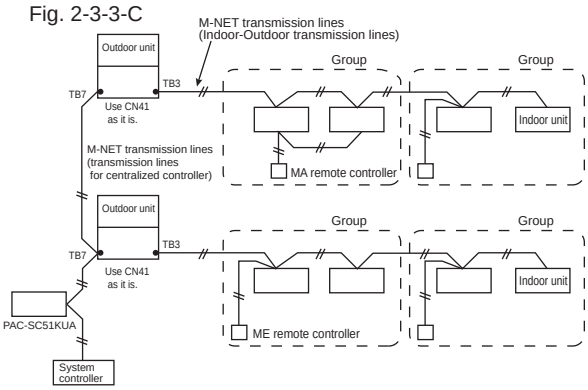

⚠ CAUTION

AG-150A*1 is recommended to connect to TB7 because it performs back-up to a number of data.
In an air conditioner system has more than 1 Outdoor units, AG-150A receiving transmission power through TB7 on one of the Outdoor units would have a risk that the connected Outdoor unit failure would stop power supply to AG-150A, and disrupt the whole system.
When applying apportioned electric power function, AG-150A is necessary to connected to TB7 and has its own power supply unit PAC-SC51KUA.*2
*1: AG-150A is an example model of system controllers.
*2: Power supply unit PAC-SC51KUA is for AG-150A.

2-3-4. Power supply to LM adapter LMAP02-E

1-phase 220-240V AC power supply is needed.
The power supply unit PAC-SC51KUA is not necessary when connecting only the LMAP02-E. Yet, make sure to change the power supply changeover connector CN41 to CN40 on the LM adapter.

2-3-5. Power supply to expansion controller

1-phase 100-240VAC power supply is needed.
The power supply unit PAC-SC51KUA is not necessary.
The expansion controller supplies power through TB3, which equals 6 indoor units. (refer to Table 2-3-2)

2-3-6. Power supply to BM ADAPTER

1-phase 100-240VAC power supply is needed.
The power supply unit PAC-SC51KUA is not necessary when only BM ADAPTER is connected.
Yet, make sure to move the power jumper from CN41 to CN40 on the BM ADAPTER.

2-4. Address setting

2-4-1. Switch operation

In order to constitute CITY MULTI in a complete system, switch operation for setting the unit address No. and connection No. is required.

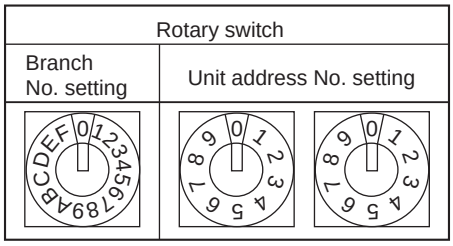

① Address No. of outdoor unit, indoor unit and remote controller.
The address No. is set at the address setting board.
In the case of R2 system, it is necessary to set the same No. at the branch No. switch of indoor unit as that of the BC controller connected. (When connecting two or more branches, use the lowest branch No.)

② Caution for switch operations

- Be sure to shut off power source before switch setting. If operated with power source on, switch can not operate properly.
- No units with identical unit address shall exist in one whole air conditioner system. If set erroneously, the system can not operate.

③ MA remote controller

- When connecting only one remote controller to one group, it is always the main remote controller.
  When connecting two remote controllers to one group, set one remote controller as the main remote controller and the other as the sub remote controller.
- The factory setting is "Main".

PAR-21MAA
The MA remote controller does not have the switches listed above.
Refer to the installation manual for the function setting.

PAC-YT51CRB

Setting the dip switches

There are switches on the front of the remote controller. Remote controller Main/Sub and other function settings are performed using these switches. Ordinarily, only change the Main/Sub setting of SW1.
(The factory settings are all "ON".)

SW No	SW contents Main	ON	OFF	Comment
1	Remote controller Main/Sub setting	Main	Sub	Set one of the two remote controllers at one group to "Main"
2	Temperature display units setting	Celsius	Fahrenheit	When the temperature is displayed in [Fahrenheit], set to "No".
3	Cooling/heating display in AUTO mode	Yes	No	When you do not want to display "Cooling" and "Heating" in the Auto mode, set to "No".

2-4-2. Rule of setting address

Unit		Address setting	Example	Note
Indoor unit		01 ~ 50	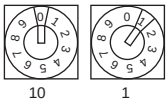	Use the most recent address within the same group of indoor units. Make the indoor units address connected to the BC controller (Sub) larger than the indoor units address connected to the BC controller (Main). If applicable, set the sub BC controllers in an PURY/PQRY system in the following order: (1) Indoor unit to be connected to the BC controller (Main) (2) Indoor unit to be connected to the BC controller (No.1 Sub) (3) Indoor unit to be connected to the BC controller (No.2 Sub) Set the address so that (1)<(2)<(3)
Outdoor unit		51 ~ 99, 100	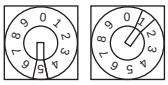	The smallest address of indoor unit in same refrigerant system + 50 ∗The address automatically becomes "100" if it is set as "01~ 50"
BC controller (Main)		52 ~ 99, 100	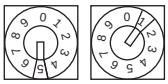	The address of outdoor unit + 1 ∗Please reset another address between 01 and 50 when two addresses overlap. ∗The address automatically becomes "100" if it is set as "01~ 50"
BC controller (Sub)		52 ~ 99, 100	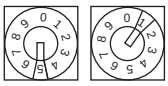	Lowest address within the indoor units connected to the BC controller (Sub) plus 50.
Local remote controller	ME, LOSSNAY Remote controller (Main)	101 ~ 150	1 Fixed 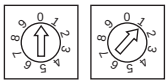	The smallest address of indoor unit in the group + 100 ∗The place of "100" is fixed to "1"
Local remote controller	ME, LOSSNAY Remote controller (Sub)	151 ~ 199, 200	1 Fixed 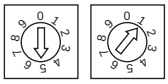	The address of main remote controller + 50 ∗The address automatically becomes "200" if it is set as "00"
System controller	Group remote controller	201 ~ 250	2 Fixed 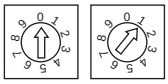	The smallest group No. to be managed + 200
System controller	System remote controller	000, 201 ~ 250	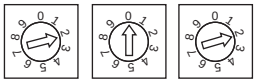	
System controller	ON/OFF remote controller	000, 201 ~ 250	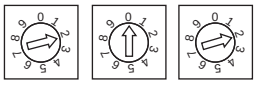	The smallest group No. to be managed + 200 ∗The smallest group No. to be managed is changeable.
System controller	AG-150A GB-50A	000, 201 ~ 250	0 0 0 100 10 1	
System controller	PAC-YG50ECA	000, 201 ~ 250	0 0 0 100 10 1	∗Settings are made on the initial screen of AG-150A.
System controller	BAC-HD150	000, 201 ~ 250	0 0 0 100 10 1	∗Settings are made with setting tool of BM ADAPTER.
System controller	LMAP02-E	201 ~ 250	2 Fixed 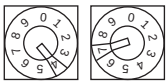	

∗Outdoor unit here mentioned includes PUHY, PURY.

2-4-3. System example

Factory setting

Original switch setting of the outdoors, indoors, controllers, LMAP02U-E at shipment is as follows.

- Outdoor unit : Address: 00, CN41: ON, DipSW2-1: OFF
- Indoor unit : Address: 00
- ME Remote controller : Address: 101
- LMAP : Address: 247, CN41: ON, DipSW1-2: OFF
- BM ADAPTER : Address: 000

2-4-3-1. Basic (No address setting)

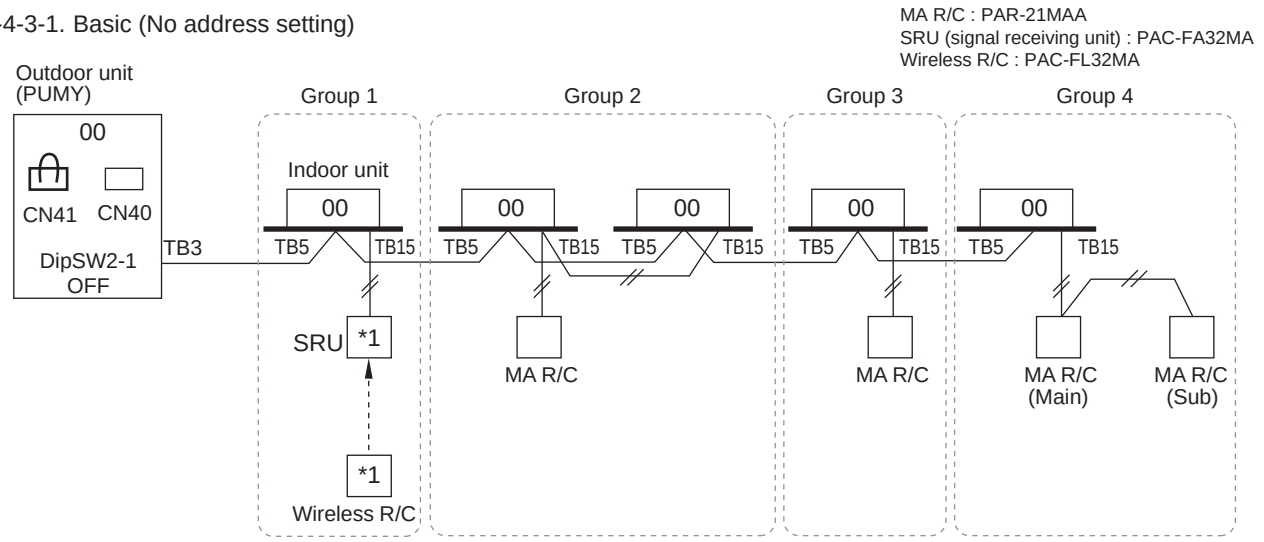

*1 For wireless R/C and Signal receiver unit(SBU), channel 1, 2 and 3 are selectable and should be set same channel.

2-4-3-2. Basic, PAC-SF44SRA

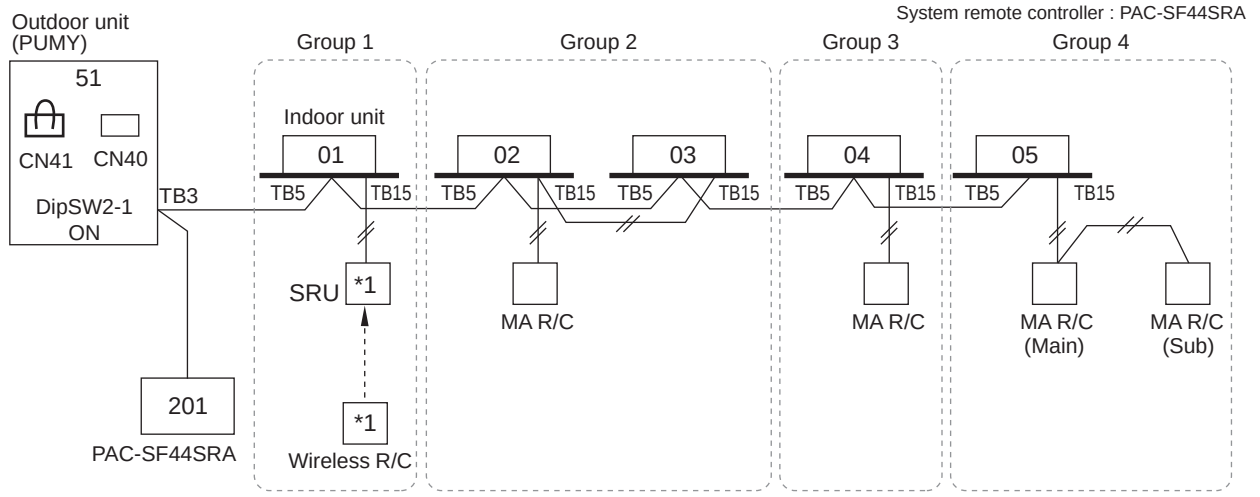

*1 For wireless R/C and Signal receiver unit(SBU), channel 1, 2 and 3 are selectable and should be set same channel.

2-4-3-3. Basic, Timer, Sub/main ME remote controller

Main ME R/C : PAR-F27MEA
Sub ME R/C : PAR-F27MEA

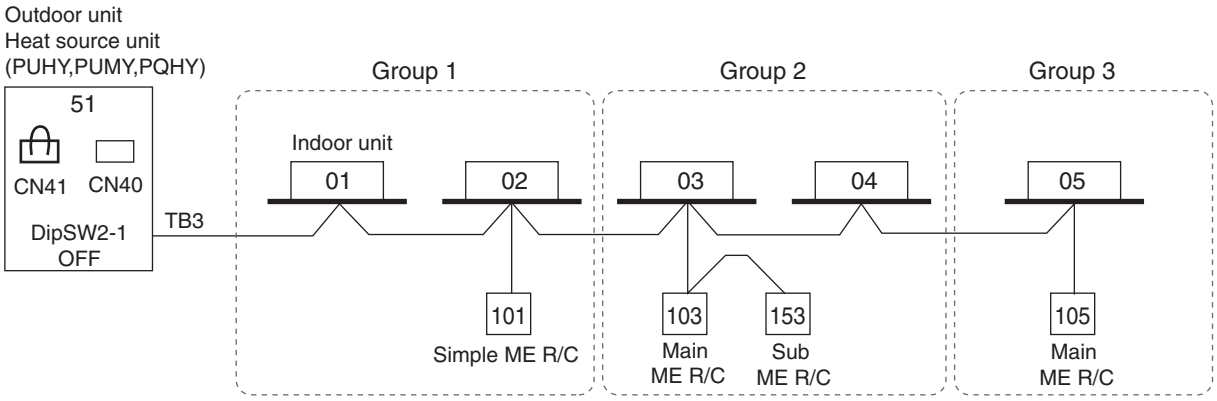

2-4-3-4. AG-150A/GB-50A, TB7

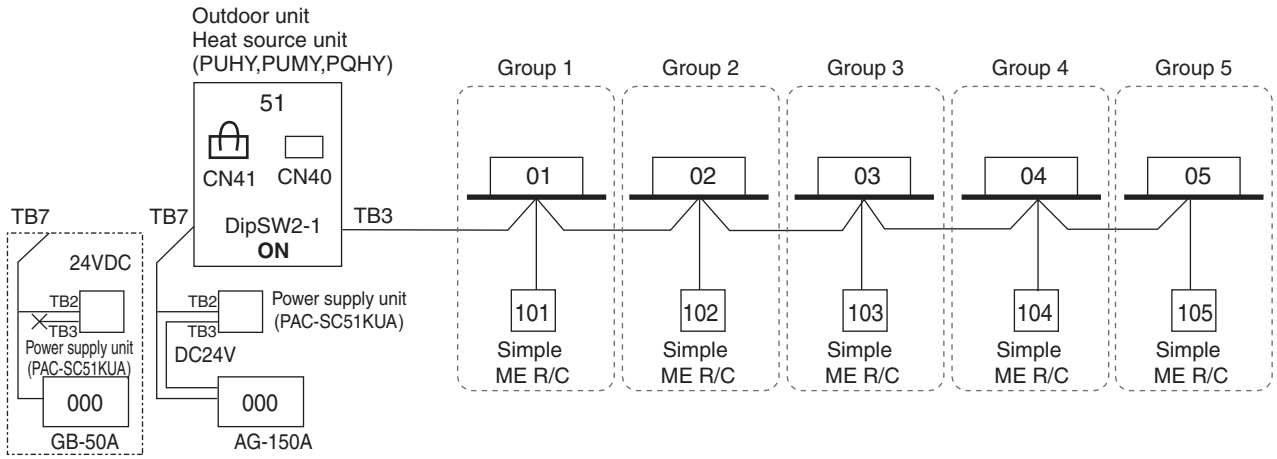

NOTE
- It is necessary to turn on the DipSW 2-1 on the outdoor unit control board when the centralized controller is connected.
- Be sure to connect other controllers (Ex. AG-150A/GB-50A) when the simple R/C is used because the running mode can not be changed by simple R/C.
- GB-50A doesn't need DC24V. TB3 on power supply unit doesn't need to be connected to GB-50A.

2-4-3-5. AG-150A/GB-50A, TB3

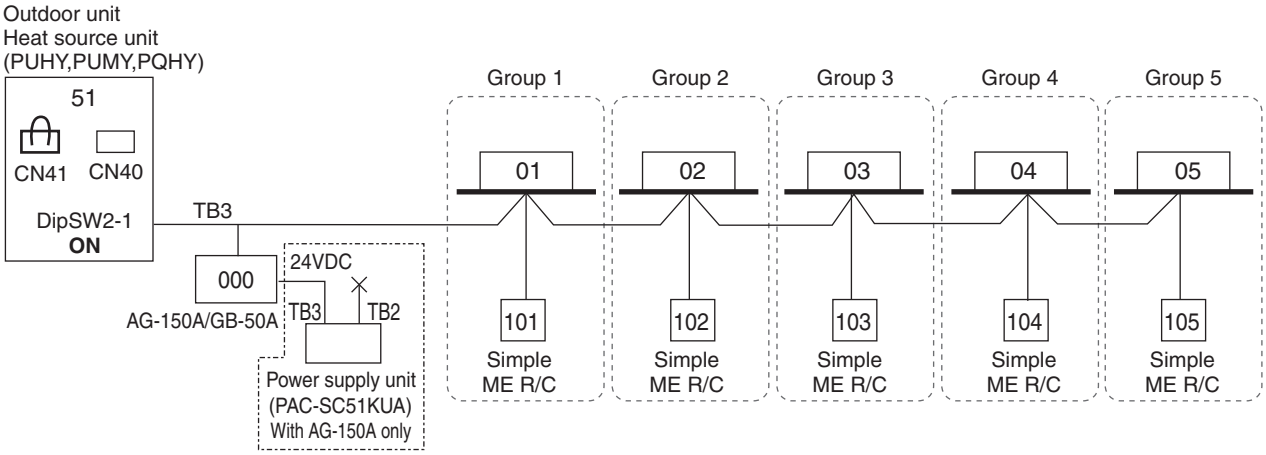

NOTE
- It is not necessary to connect the M-NET line between AG-150A and Power supply unit (TB2) when AG-150A is connected on the indoor line.
- GB-50A need power from TB3 of the outdoor unit only.

2-4-3-6. Grouping in different refrigerant system

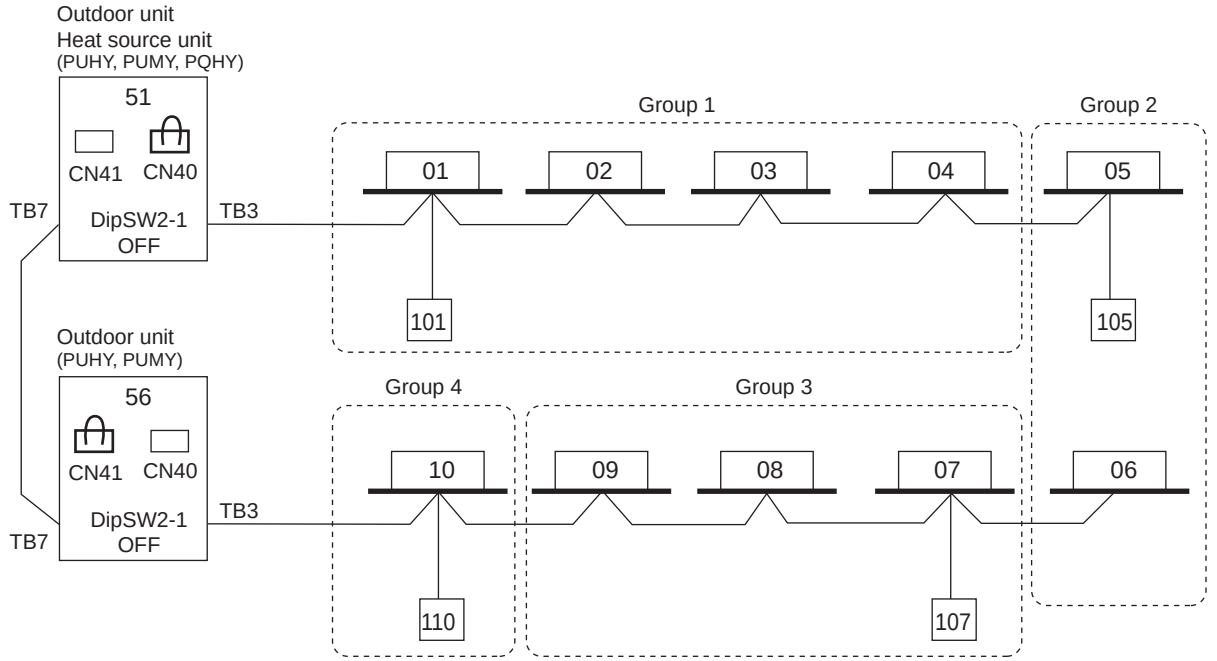

NOTE
- It is necessary to change the connecter to CN40 on the outdoor unit (Heat source unit) control board (only one outdoor unit (Heat source unit)) when the group is set between other refrigerant systems.
- It is necessary to set on the remote controller by manual when group sets on the different refrigerant system. Please refer to remote controller installation manual.

2-4-3-7. 2 Outdoor unit (Heat source unit), AG-150A, GB-50A, MA

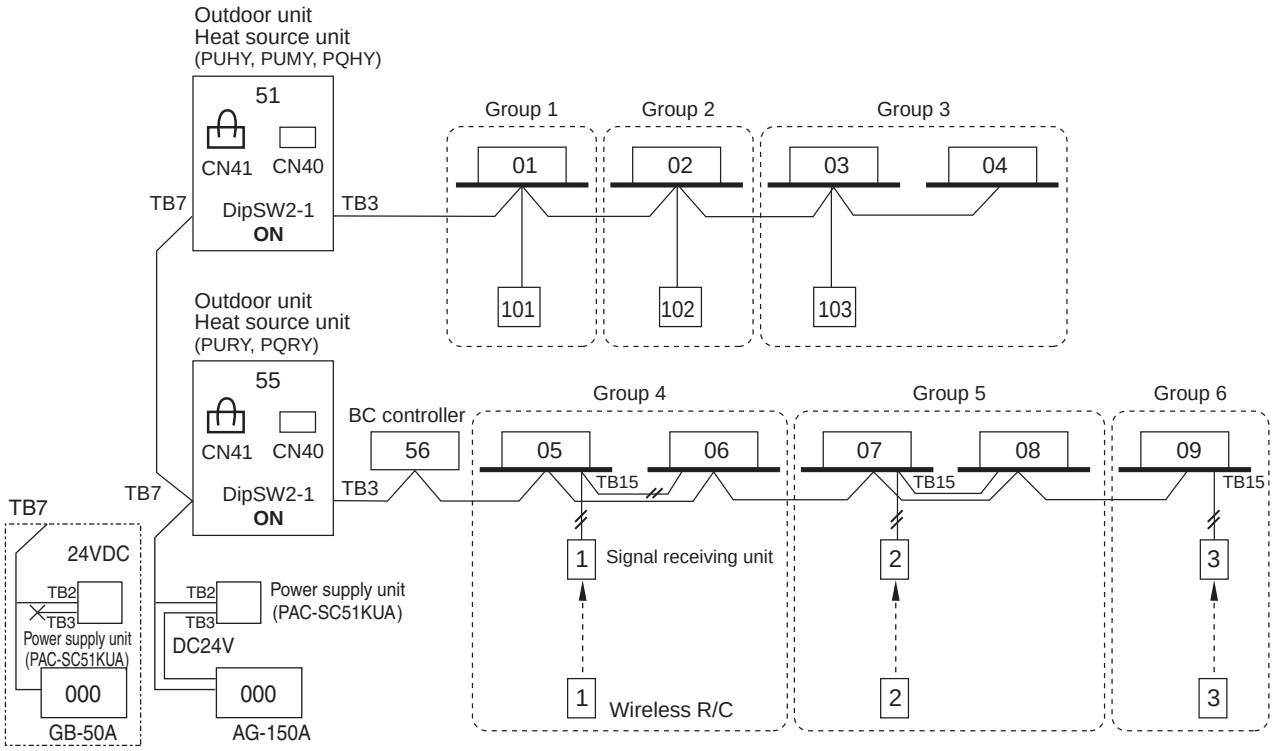

NOTE
- GB-50A doesn't need DC24V. TB3 on power supply unit doesn't need to be connected to GB-50A.

2-4-3-8. TG-2000A

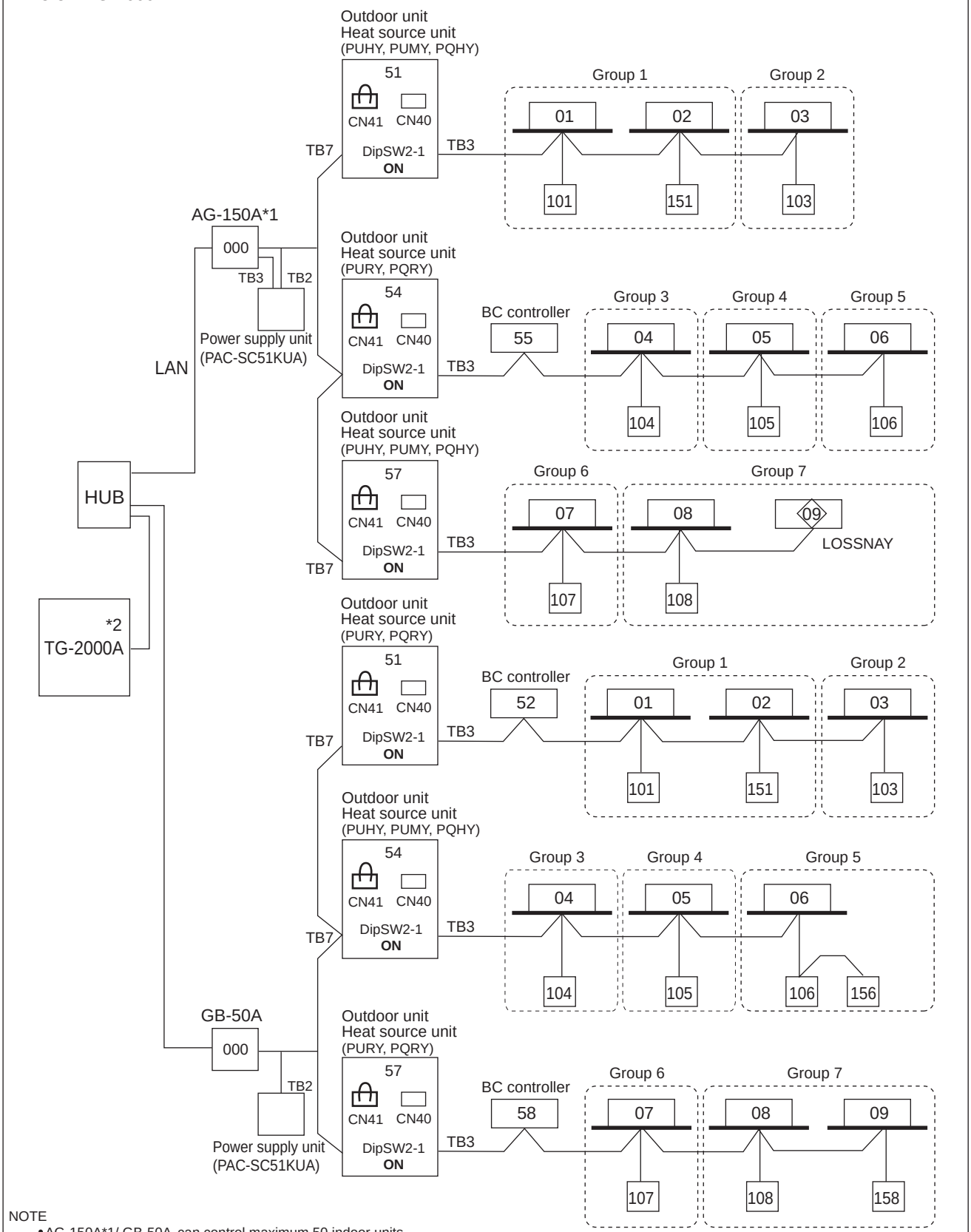

NOTE
- AG-150A*1/ GB-50A can control maximum 50 indoor units.
- TG-2000A can control maximum 40 AG-150A*1/ GB-50A.
- TG-2000A can control maximum 2000 indoor units.
- GB-50A doesn't need DC24V. TB3 on power supply unit doesn't need to be connected to GB-50A.

*1 Only AG-150As that are not connected to expansion controllers. AG-150A (Ver. 1 series) does not support the expansion controller (EC).
2 TG-2000A (Ver. 5.5 or later) supports AG-150A (Ver. 1 series). AG-150A connected with PAC-YG50ECA is compatible with TG-2000A Ver. 6.2 or later.

2-4-3-9. AG-150A + PAC-YG50ECA (Expansion Controller)

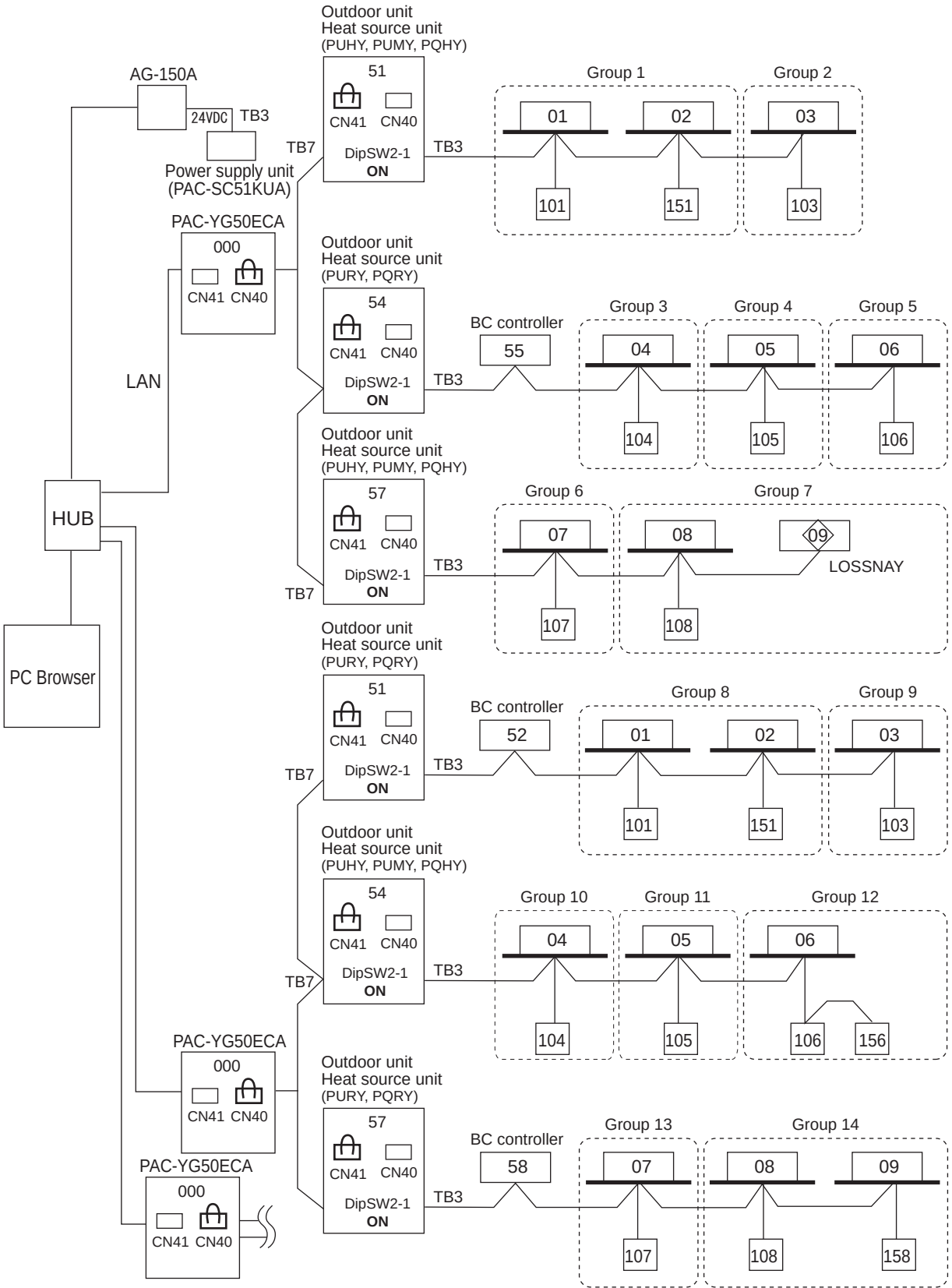

NOTE
- AG-150A*1 can control maximum 150 indoor units via expansion controler.
- When connecting AG-150A to PAC-YG50ECA, TB2 for power supply unit does not need to be connected to AG-150A.

*1 AG-150A （Ver. 2.1 or later) supports the expansion controller.

2-4-3-10. LONWORKS

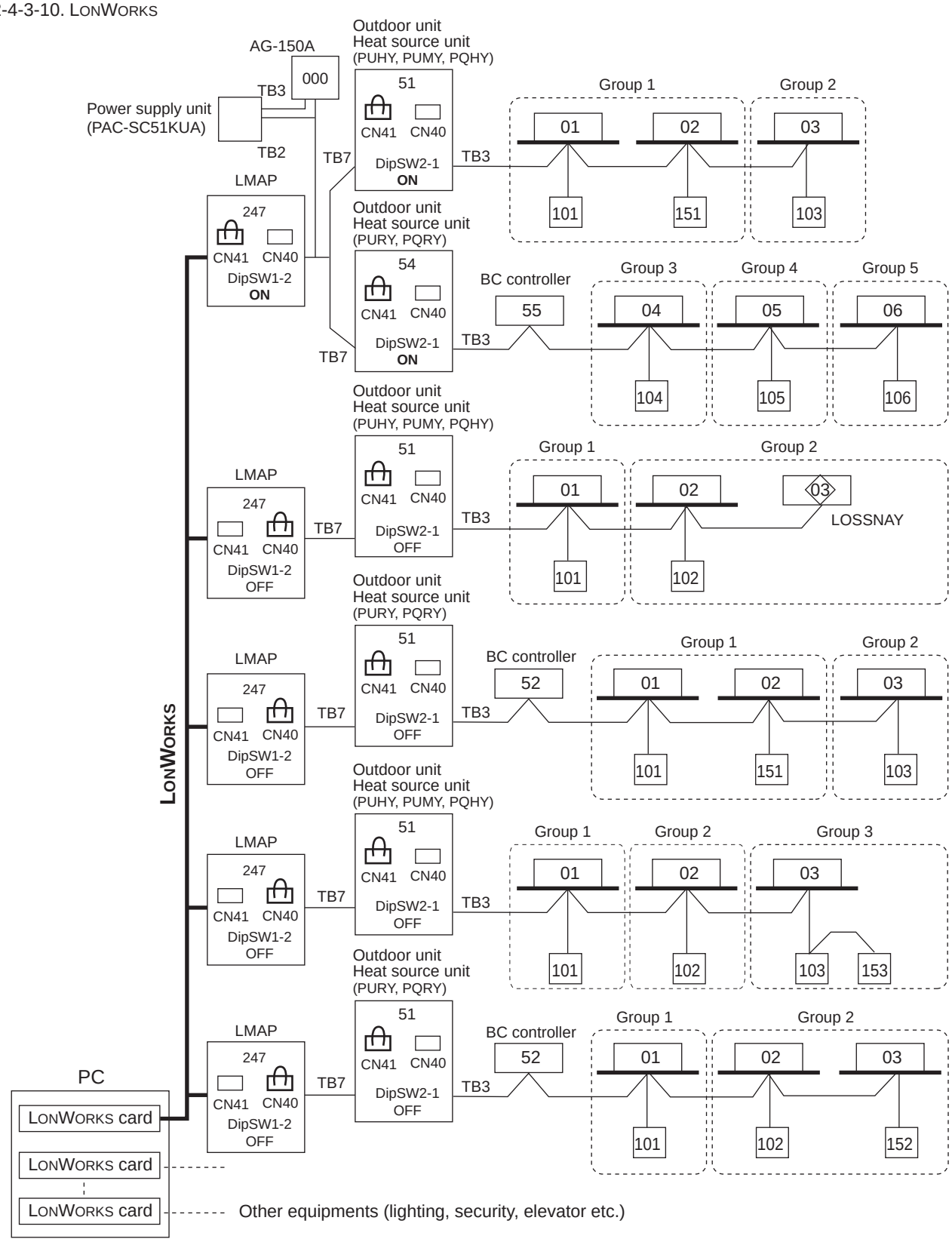

NOTE
- LMAP (LMAP02-E) can control 50 indoor units.
- It is necessary to turn on the DipSW1-2 on the LMAP control board and the DipSW2-1 on the outdoor unit (heat source unit) control board with centralized controller (Power supply unit).
- It is necessary to change the connector to CN40 on the LMAP control board without centralized controllers (Power supply unit)

2-4-3-11. BM ADAPTER

BM ADAPTER can transmission for max. 50 indoor units;
Change Jumper from CN41 to CN40 to activate power supply to BM ADAPTER itself for those BM ADAPTER connected without the power supply unit.

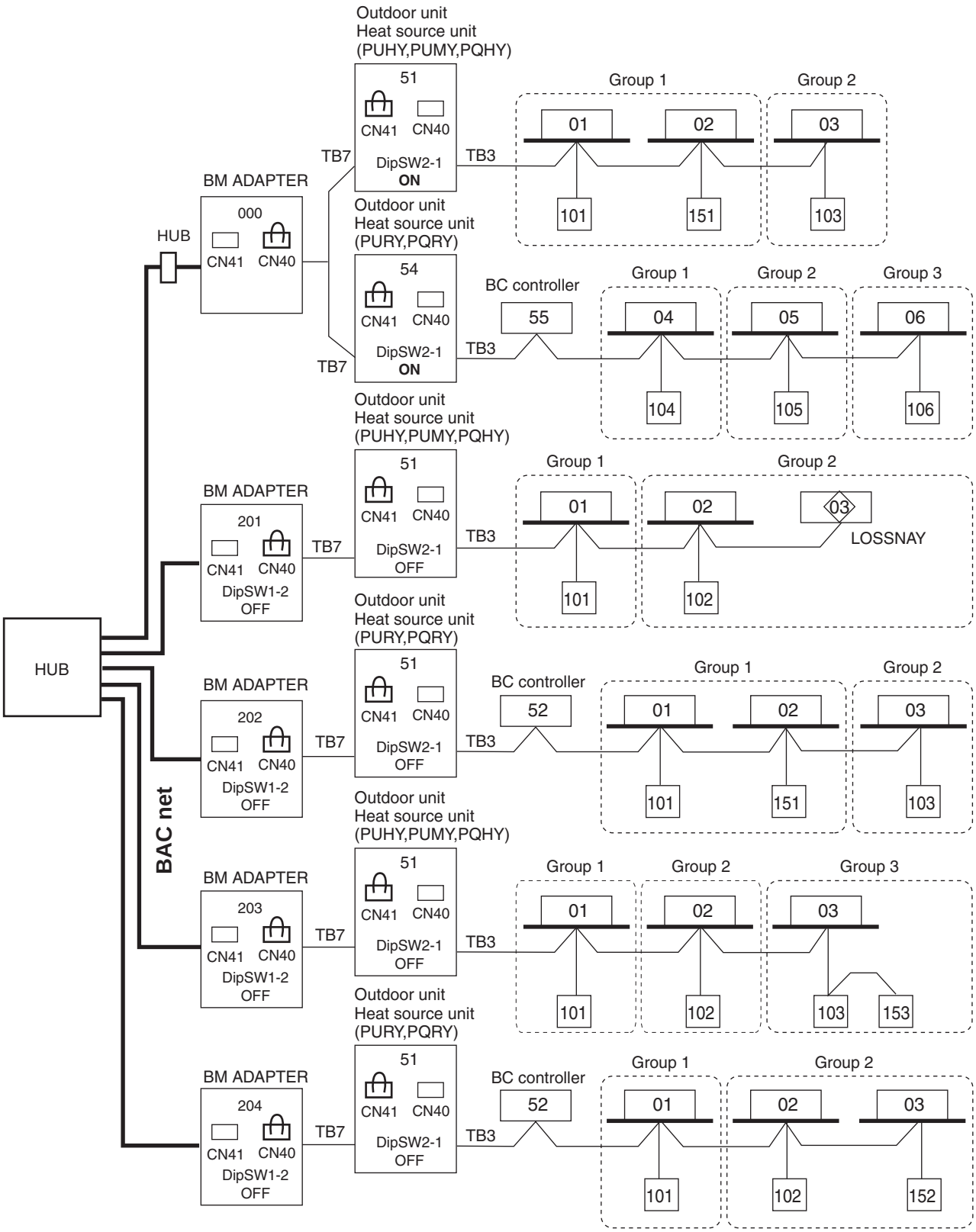

2-4-3-12. BM ADAPTER+PAC-YG50ECA (Expansion controller)

BM ADAPTER(*1) can transmission for max. 150 indoor units/via expansion controllers (PAC-YG50ECA).

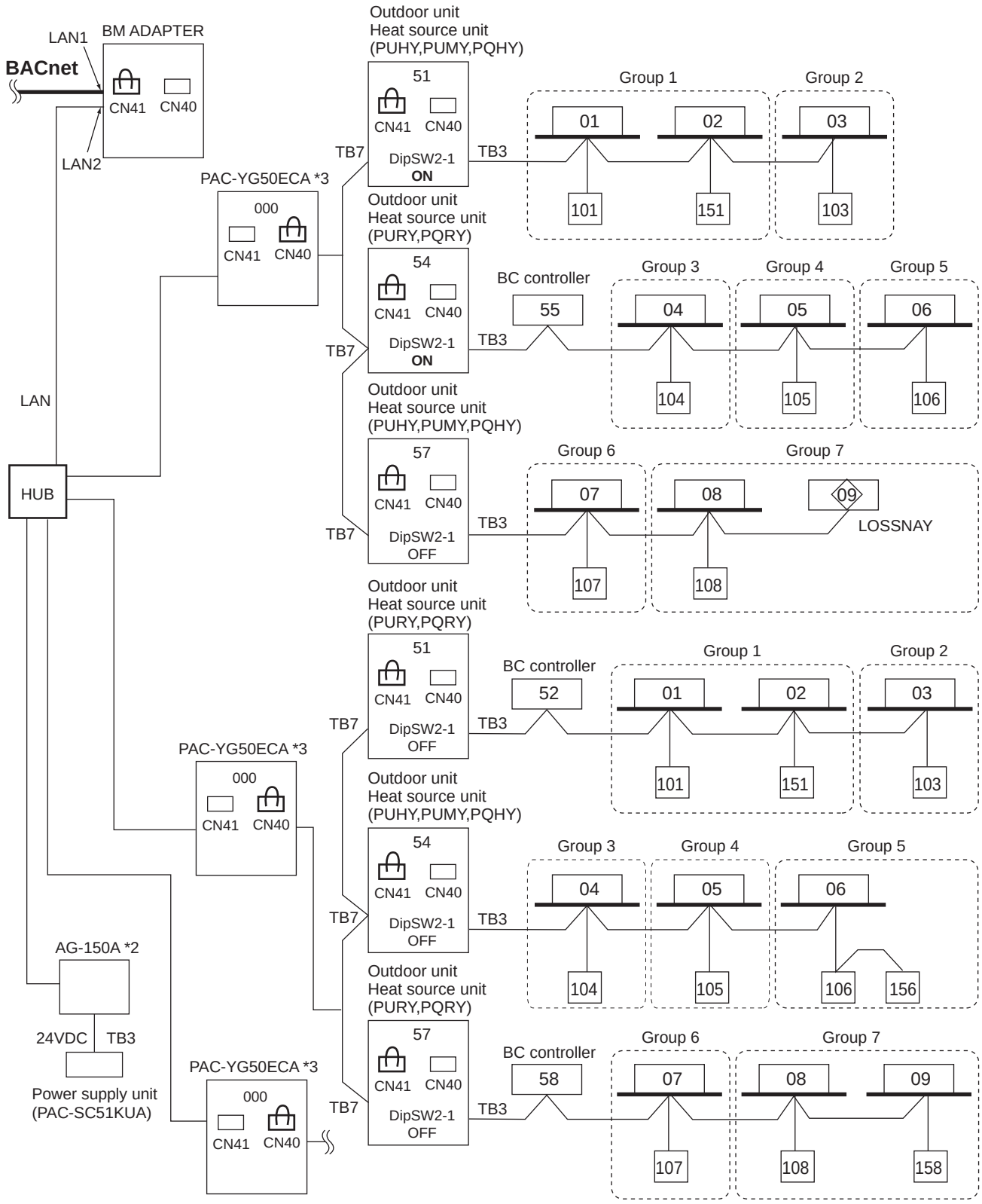

NOTE

•It is not necessary to connect the M-NET transmission line to the TB3 on BM ADAPTER. Leave the power jumper of BM ADAPTER connected to CN41.

*1 BM ADAPTER (Ver.2.00 or later) supports the expansion controller.

*2 AG-150A (Ver.2.30 or later) supports the BM ADAPTER.

*3 PAC-YG50ECA (Ver.1.30 or later) supports the BM ADAPTER.

3. Piping Design

3-1. R410A Piping material

Refrigerant pipe for CITY MULTI shall be made of phosphorus deoxidized copper, and has two types.
A. Type-O : Soft copper pipe (annealed copper pipe), can be easily bent with human's hand.
B. Type-1/2H pipe : Hard copper pipe (Straight pipe), being stronger than Type-O pipe of the same radical thickness.

The maximum operation pressure of R410A air conditioner is 4.30 MPa [623psi]. The refrigerant piping should ensure the safety under the maximum operation pressure. MITSUBISHI ELECTRIC recommends pipe size as Table 3-1, or You shall follow the local industrial standard. Pipes of radical thickness 0.7mm or less shall not be used.

Table 3-1. Copper pipe size and radial thickness for R410A CITY MULTI.

Size (mm)	Size (inch)	Radial thickness (mm)	Radial thickness (mil)	Pipe type
ø6.35	ø1/4"	0.8	[32]	Type-O
ø9.52	ø3/8"	0.8	[32]	Type-O
ø12.7	ø1/2"	0.8	[32]	Type-O
ø15.88	ø5/8"	1.0	[40]	Type-O
ø19.05	ø3/4"	1.2	[48]	Type-O
ø19.05	ø3/4"	1.0	[40]	Type-1/2H or H
ø22.2	ø7/8"	1.0	[40]	Type-1/2H or H
ø25.4	ø1"	1.0	[40]	Type-1/2H or H
ø28.58	ø1-1/8"	1.0	[40]	Type-1/2H or H
ø31.75	ø1-1/4"	1.1	[44]	Type-1/2H or H
ø34.93	ø1-3/8"	1.2	[48]	Type-1/2H or H
ø41.28	ø1-5/8"	1.4	[56]	Type-1/2H or H

* For pipe sized ø19.05 (3/4") for R410A air conditioner, choice of pipe type is up to you.
* The figures in the radial thickness column are based on the Japanese standards and provided only as a reference. Use pipes that meet the local standards.

Flare

Due to the relative higher operation pressure of R410A compared to R22, the flare connection should follow dimensions mentioned below so as to achieve enough the air-tightness.

Flare pipe	Pipe size	A (For R410A) (mm[in.])
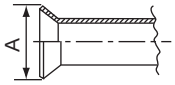	ø6.35 [1/4"]	9.1
	ø9.52 [3/8"]	13.2
	ø12.70 [1/2"]	16.6
	ø15.88 [5/8"]	19.7
	ø19.05 [3/4"]	24.0

Flare nut	Pipe size	B (For R410A) (mm[in.])
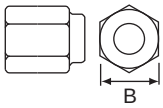	ø6.35 [1/4"]	17.0
	ø9.52 [3/8"]	22.0
	ø12.70 [1/2"]	26.0
	ø15.88 [5/8"]	29.0
	ø19.05 [3/4"]	36.0

3-2. Piping Design

3-2-1. PUMY-P-YHMB, VHMB Piping

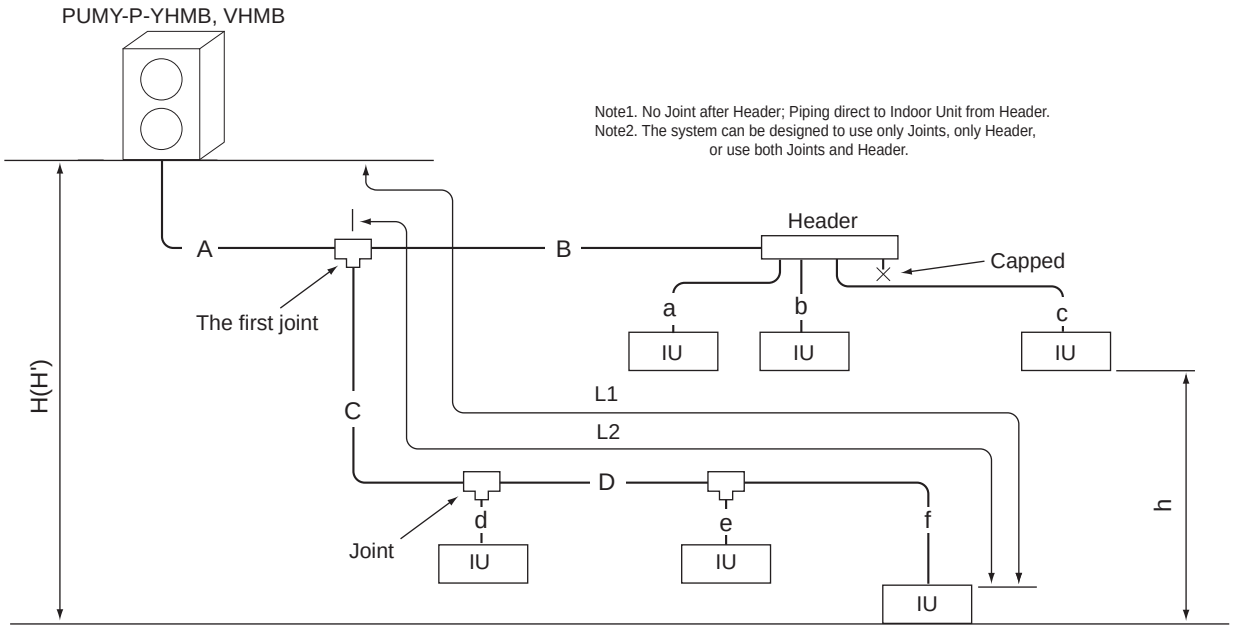

Fig. 3-2-1A Piping scheme

IU : Indoor unit , OU : Outdoor unit

Table3-2-1-1. Piping length (m [ft.])

Item	Piping in the figure	Max. length
Total piping length	A+B+C+D+a+b+c+d+e+f	120 [393']
Farthest IU from OU (L1)	A+C+D+f / A+B+c	80 [262']
Farthest IU from the first Joint (L2)	C+D+f / B+c	30 [98']
Height between OU and IU (OU above IU)	H	50 [164']
Height between OU and IU (OU under IU)	H'	20 [65']
Height between IU and IU	h	12 [39']

OU: Outdoor Unit, IU: Indoor Unit

Table3-2-1-2. Piping "A"size selection rule (mm [in.])

Outdoor and the first-Joint/Header	Pipe(Liquid)	Pipe(Gas)
PUMY-P-YHMB, VHMB=CMY-Y62-G-E	ø9.52 [3/8"]	ø15.88 [5/8"]
PUMY-P-YHMB, VHMB=CMY-Y64,Y68-G-Eb	ø9.52 [3/8"]	ø15.88 [5/8"]

Table3-2-1-3. Piping "B","C","D"size selection rule (mm [in.])

Total down-stream Indoor capacity	Pipe(Liquid)	Pipe(Gas)
~ P182	ø9.52 [3/8"]	ø15.88 [5/8"]

Table3-2-1-4. Piping "a","b","c","d","e","f"size selection rule (mm [in.])

Indoor Unit size	Pipe(Liquid)	Pipe(Gas)
P15,P20,P25,P32,P40,P50	ø6.35 [1/4"]	ø12.70 [1/2"]
P63,P71,P80,P100,P125,P140	ø9.52 [3/8"]	ø15.88 [5/8"]

Table3-2-1-5. Joint, Header selection rule

Joint	4-branch Header	8-branch Header
CMY-Y62-G-E	CMY-Y64-G-E	CMY-Y68-G-E

* For details of installation of Joint, header, and distributor, refer to its Installation Manual.

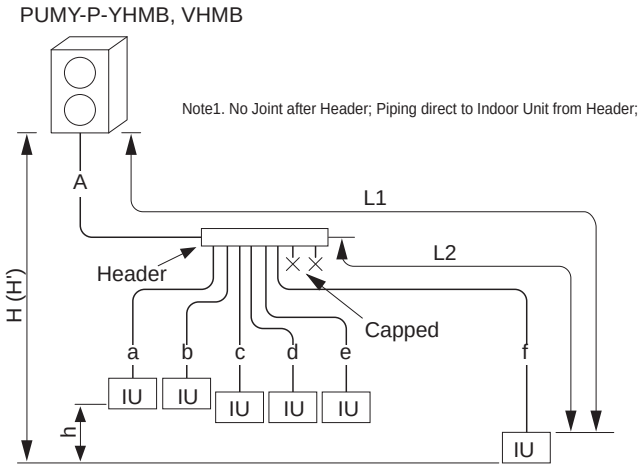

Fig. 3-2-1B Piping scheme

Table3-2-1B1. Piping length (m [ft.])

Item	Piping in the figure	Max. length
Total piping length	A+a+b+c+d+e+f	120 [393']
Farthest IU from OU (L1)	A+f	80 [262']
Farthest IU from Header (L2)	f	30 [98']
Height between OU and IU (OU above IU)	H	50 [164']
Height between OU and IU (OU under IU)	H'	20 [65']
Height between IU and IU	h	12 [39']

Note3. Indoor capacity is described as its model size;
For example, PEFY-P32VMM-E, its capacity is P32;
Note4. Total down-stream Indoor capacity is the summary of the model size of Indoors downstream.
For example, PEFY-P25VMM-E+PEFY-P32VMM-E: Total Indoor capacity=P25+P32=P57

System S

3-3. Refrigerant charging calculation

Original refrigerant charge for PUMY-P-YHMB, VHMB is 8.5 kg, including 3 kg for 50 m total extended piping length use.
Thus, there is no need to charge additional refrigerant to the system if the total extended piping length is 50 m or less.

If the total extended piping length is over 50 m, calculate the additional refrigerant using following procedure. Yet, if the calculated result is negative, no additional charge is needed.

Additional refrigerant charge	=	Total length of liquid pipe sized ø9.52 x 0.06 (kg/m)	+	Total length of liquid pipe sized ø6.35 x 0.024 (kg/m)	-	Original charge
(kg)		(m) x 0.06 (kg/m)		(m) x 0.024 (kg/m)		3.0 (kg)

Example:

Indoor 1:	P63	A=ø9.52 30 m	a=ø9.52	15 m
Indoor 2:	P40		b=ø6.35	10 m
Indoor 3:	P25		c=ø6.35	10 m
Indoor 4:	P20		d=ø6.35	20 m

Total length of each liquid pipe is as follows
ø9.52 A + a = 30 + 15 = 45 m
ø6.35 b + c + d = 10 + 10 + 20 = 40 m

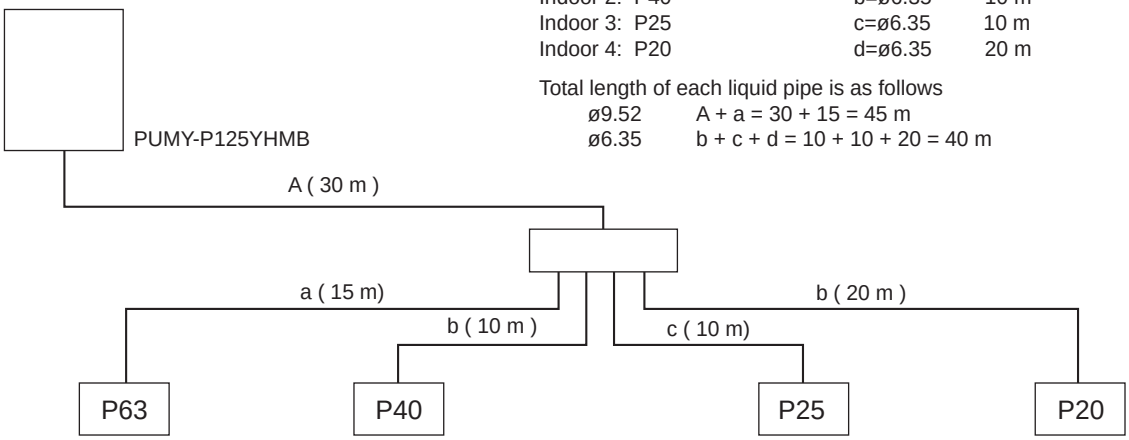

Additional refrigerant charge	=	Total length of liquid pipe sized ø9.52 x 0.06 (kg/m)	+	Total length of liquid pipe sized ø6.35 x 0.024 (kg/m)	-	Original charge
(kg)		45 (m) x 0.06 (kg/m)		40 (m) x 0.024 (kg/m)		3.0(kg)

= 2.70 + 0.96 - 3.00

= 0.66

≈ 0.7 kg (round-up)

4. Outdoor Installation

4-1. Requirement on installation site

4-1-1. General caution

A. Avoid locations exposed to direct sunlight or other sources of heat.
B. Select a location from which noise emitted by the unit will not inconvenience the neighbors.
C. Select a location permitting easy wiring and pipe access to the power source and indoor unit.
D. Avoid locations where combustible gases may leak, be produced, flow, or accumulate.
E. Note that water may drain from the unit during operation.
F. Select a level location that can bear the weight and vibration of the unit.
G. Avoid locations where the unit can be covered by snow. In areas where heavy snow fall is anticipated, special precautions such as raising the installation location or installing a hood on the air intake must be taken to prevent the snow from blocking the air intake or blowing directly against it. This can reduce the airflow and a malfunction may result.
H. Avoid locations exposed to oil, steam, or sulfuric gas.
I. Use the transportation handles of the outdoor unit to transport the unit. If the unit is carried from the bottom, hands or fingers may be pinched.

4-1-2. Installation at windy location.

When installing the outdoor unit on a rooftop or other location unprotected from the wind, situate the air outlet of the unit so that it is not directly exposed to strong winds.Strong wind entering the air outlet may impede the normal airflow and a malfunction may result.
The following shows two examples of precautions against strong winds.
① Install an optional air guide if the unit is installed in a location where strong winds from a typhoon, etc. may directly enter the air outlet. (Fig. 4-1-2a)
Ⓐ Air guide
② Position the unit so that the air outlet blows perpendicularly to the seasonal wind direction, if possible. (Fig. 4-1-2b)
Ⓑ Wind direction

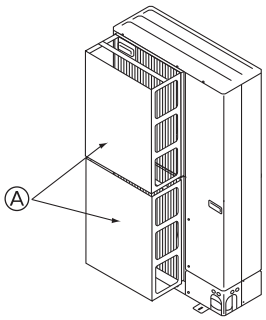

Fig. 4-1-2a

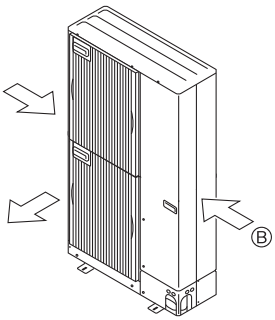

Fig. 4-1-2b

4-1-3. Foundation

A. Be sure to install the unit in a sturdy, level surface to prevent rattling noises during operation. (see Fig. 4-1-3)
B. Foundation specifications are as follows. mm [in.]

Thickness of concrete	Weight-bearing capacity	Foundation bolt	Bolt length
120 [4-3/4"]	320 kg [706lbs]	M10 [3/8"]	70 [2-25/32"]

C. Make sure that the length of the foundation bolt is within 30 mm [1-3/16"] of the bottom surface of the base.
D. Secure the base of the unit firmly with four-M10 [3/8"] foundation bolts in sturdy locations.

⚠ Warning:
A. The foundation base should be strong enough to support the outdoor unit, otherwise, it may fall down and cause damage or injures.
B. The unit must be installed according to the instructions in order to minimize the risk of damage from earthquakes, typhoons, or strong winds.

(mm [in.])

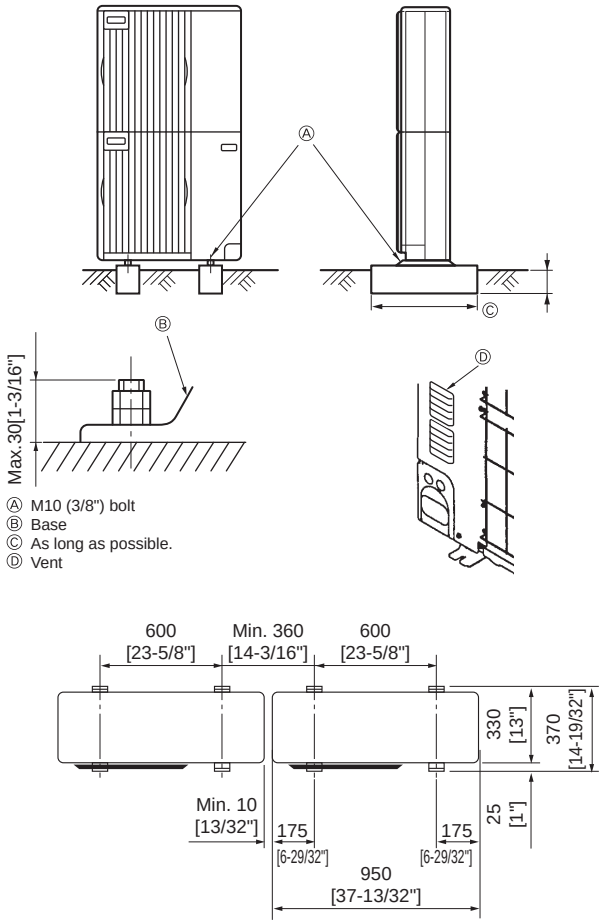

Fig. 4-1-3

System S

4-2. Spacing

PUMY-P100,125,140YHMB, VHMB's external dimension. (Fig.4-2-1)

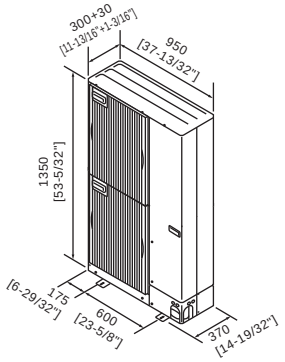

Fig. 4-2-1 PUMY-P-YHMB, VHMB dimension

PUMY-P-YHMB, VHMB can connect Indoor unit sized P15 to P140 ; and can connect totally 1-12 Indoor units with total capacity ranged 50%-130% of the outdoor unit capacity.

Connectable Indoor capacity		Connectable Indoor unit
PUMY-P100YHMB	P50-P130	P15-P125, 1-8 units
PUMY-P125YHMB	P63-P162	P15-P140, 1-10 units
PUMY-P140YHMB	P70-P182	P15-P140, 1-12 units

Connectable Indoor capacity		Connectable Indoor unit
PUMY-P100VHMB	P50-P130	P15-P125, 1-8 units
PUMY-P125VHMB	P63-P162	P15-P140, 1-10 units
PUMY-P140VHMB	P70-P182	P15-P140, 1-12 units

4-2-1. Spacing individual PUMY-P-YHMB, VHMB

Follow Fig. 4-2-2 ~ 7 to space individual PUMY-P-YHMB, VHMB at the installation site.

mm[in.]

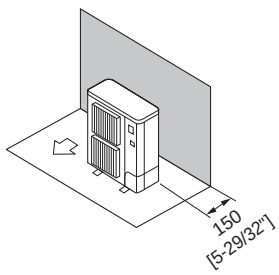

Fig. 4-2-2
Obstacles at rear only

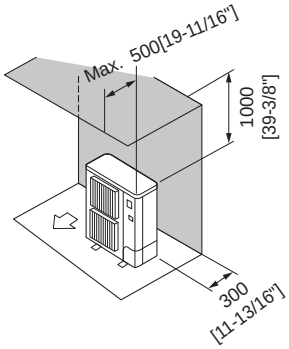

Fig. 4-2-3
Obstacles at rear and above only

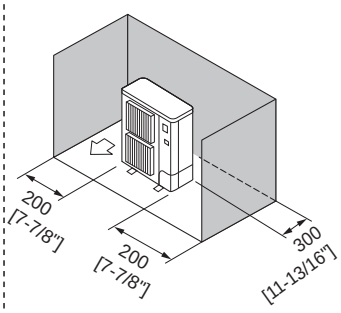

Fig. 4-2-4
Obstacles at rear and sides only

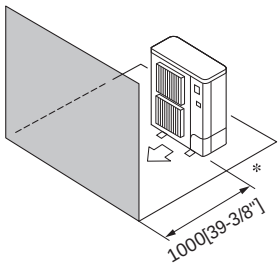

* Using an optional air outlet guide, the clearance >= 500 mm [19-11/16"].

Fig. 4-2-5
Obstacles at front only

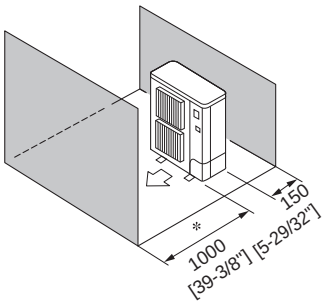

* Using an optional air outlet guide, the clearance >= 500 mm [19-11/16"].

Fig. 4-2-6
Obstacles at front and rear only

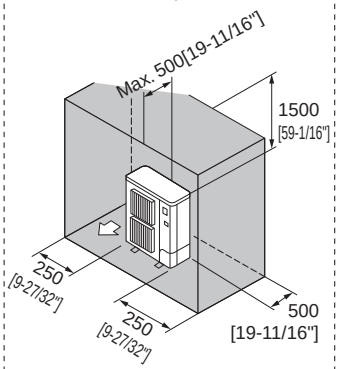

* NO upward airflow outlet guide.

Fig. 4-2-7
Obstacles at rear, sides and above only

4-2-2. Spacing grouped PUMY-P-YHMB, VHMB

Follow Fig. 4-2-8 ~ 13 to space grouped PUMY-P-YHMB, VHMB at the installation site.
Leave 10 mm [13/32"] space or more between PUMY-P-YHMB, VHMB units.

mm[in.]

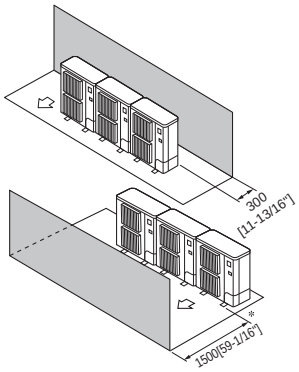

* When using an optional air outlet guide, the clearance is 1000 mm [39-3/8"] or more.

Fig. 4-2-8
Obstacles at rear or front only

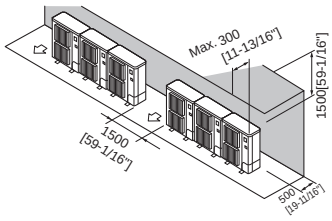

* In case of side-by-side installation, <=3 units;
* Do not install the optional air outlet guides for upward airflow.

Fig. 4-2-9
Obstacles at rear and above only

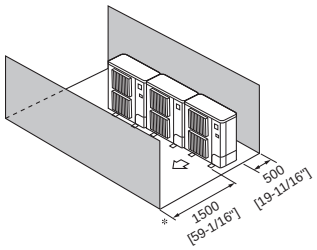

* Using an optional air outlet guide, the clearance >= 1000 mm [39-3/8"].

Fig. 4-2-10
Obstacles at front and rear only

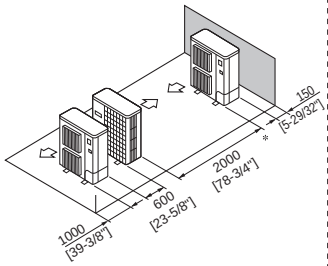

* Using an optional air outlet guide, the clearance >= 1000 mm [39-3/8"].

Fig. 4-2-11
Parallel individuals arrangement

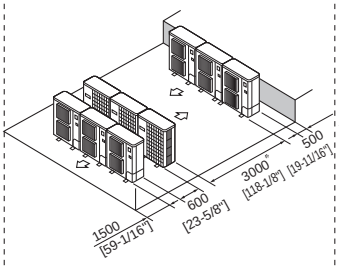

* Using an optional air outlet guide for upward airflow, the clearance >= 1500 mm [59-1/16"].

Fig. 4-2-12
Parallel groups arrangement

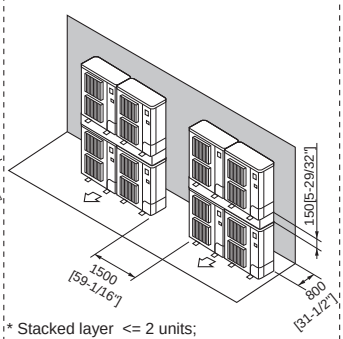

* Stacked layer <= 2 units;
* Side-by-side stacked groups <= 2 groups;

Fig. 4-2-13
Stacked groups arrangement

4-3. Piping direction

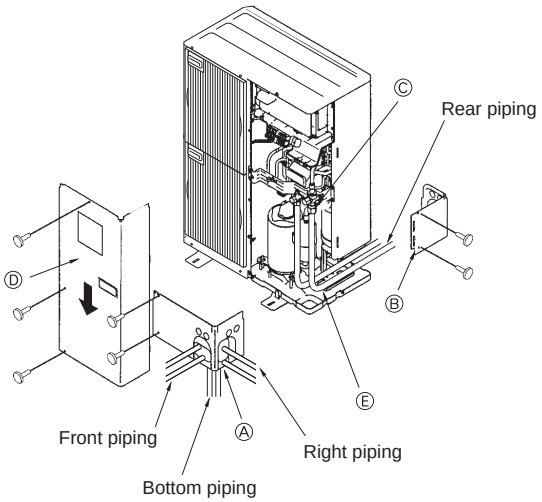

Ⓐ Front piping cover
Ⓑ Piping cover
Ⓒ Stop valve
Ⓓ Service panel
Ⓔ Bend radius : 100 mm [3-15/16"] - 150 mm [5-29/32"]

5. Caution for refrigerant leakage

The installer and/or air conditioning system specialist shall secure safety against refrigerant leakage according to local regulations or standards.
The following standard may be applicable if no local regulation or standard is available.

5-1. Refrigerant property

R410A refrigerant is harmless and incombustible. The R410A is heavier than the indoor air in density. Leakage of the refrigerant in a room has possibility to lead to a hypoxia situation. Therefore, the Critial concentration specified below shall not be exceeded even if the leakage happens.

- **Critical concentration**

Critical concentration hereby is the refrigerant concentration in which no human body would be hurt if immediate measures can be taken when refrigerant leakage happens.

Critical concentration of R410A: 0.30kg/m^3
(The weight of refrigeration gas per 1 m^3 air conditioning space.);
* The Critical concentration is subject to ISO5149, EN378-1.

For the CITY MULTI system, the concentration of refrigerant leaked should not have a chance to exceed the Critical concentration in any situntion.

5-2. Confirm the Critical concentration and take countermeasure

The maximum refrigerant leakage concentration (Rmax) is defined as the result of the possible maximum refrigerant weight (Wmax) leaked into a room divided by its room capacity (V).It is referable to Fig.5-1.The refrigerant of Outdoor unit here includes its original charge and additional charge at the site.
The additional charge is calculated according to "**3-3 .Refrigerant charging calculation**" and shall not be over charged at the site.
Procedure 5-2-1~3 tells how to confirm maximum refrigerant leakage concentration (Rmax) and how to take countermeasures against a possible leakage.

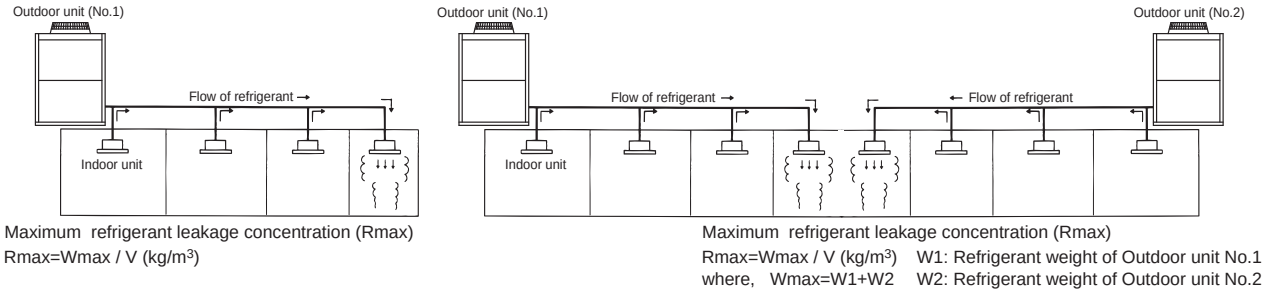

Fig. 5-1 The maximum refrigerant leakage concentration

5-2-1.Find the room capacity (V),
If a room having total opening area more than 0.15% of the floor area at a low position with another room/space, the two rooms/space are considered as one.The total space shall be added up.

5-2-2.Find the possible maximum leakage (Wmax) in the room.If a room has Indoor unit(s) from more than 1 Outdoor unit, add up the refrigerant of the Outdoor units.

5-2-3.Divide (Wmax) by (V) to get the maximum refrigerant leakage concentration (Rmax).

5-2-4.Find if there is any room in which the maximum refrigerant leakage concentration (Rmax) is over 0.30kg/m^3.
If no, then the CITY MULTI is safe against refrigerant leakage.
If yes, following countermeasure is recommended to do at site.
Countermeasure 1:Let-out (making V bigger)
Design an opening of more than 0.15% of the floor area at a low position of the wall to let out the refrigerant whenever leaked.
e.g.make the upper and lower seams of door big enough.
Countermeasure 2:Smaller total charge (making Wmax smaller)
e.g.Avoid connecting more than 1 Outdoor unit to one room.
e.g.Using smaller model size but more Outdoor units.
e.g.Shorten the refrigerant piping as much as possible.
Countermeasure 3:Fresh air in from the ceiling (Ventilation)
As the density of the refrigerant is bigger than that of the air.Fresh air supply from the ceiling is better than air exhausting from the ceiling.
Fresh air supply solution refers to Fig.5-2~4.

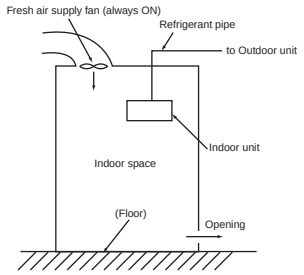

Fig.5-2.Fresh air supply always ON

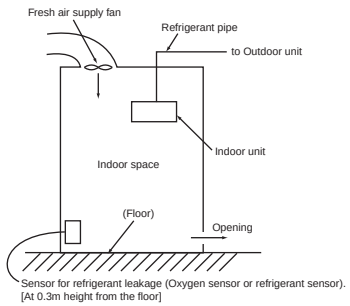

Fig.5-3.Fresh air supply upon sensor action

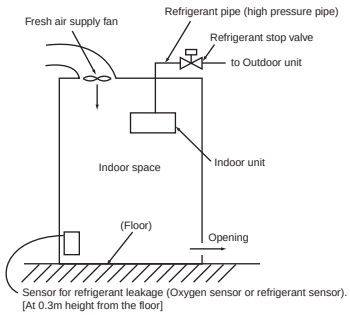

Fig.5-4.Fresh air supply and refrigerant shut-off upon sensor action

Note 1.Countermeasure 3 should be done in a proper way in which the fresh air supply shall be on whenever the leakage happens.
Note 2.In principle, MITSUBISHI ELECTRIC requires proper piping design, installation and air-tight testing after installation to avoid leakage happening.
In the area should earthquake happen, anti-vibration measures should be fully considered.
The piping should consider the extension due to the temperature variation.

CITY MULTI
SYSTEM DESIGN Y SERIES

1. Electrical work ..... 4 - 36
   1-1.General cautions ..... 4 - 36
   1-2.Power supply for Indoor unit and Outdoor unit ..... 4 - 37
   1-3.Power cable specifications ..... 4 - 43
   1-4.Power supply examples ..... 4 - 44
2. M-NET control ..... 4 - 47
   2-1.Transmission cable length limitation ..... 4 - 47
   2-2.Transmission cable specifications ..... 4 - 48
   2-3.System configuration restrictions ..... 4 - 49
   2-4.Address setting ..... 4 - 52
3. Piping Design ..... 4 - 65
   3-1.R410A Piping material ..... 4 - 65
   3-2.Piping Design ..... 4 - 66
4. Outdoor Installation ..... 4 - 70
   4-1.Requirement on installation site ..... 4 - 70
   4-2.Spacing ..... 4 - 71
   4-3.Piping direction ..... 4 - 73
   4-4.Weather countermeasure ..... 4 - 78
   4-5.Caution on selecting outdoor units ..... 4 - 79
5. Caution for refrigerant leakage ..... 4 - 80
   5-1.Refrigerant property ..... 4 - 80
   5-2.Confirm the Critical concentration and take countermeasure ..... 4 -80

1. Electrical work

1-1. General cautions

System Y

① Follow ordinance of your governmental organization for technical standard related to electrical equipment, wiring regulations, and guidance of each electric power company.
② Wiring for control (hereinafter referred to as transmission cable) shall be (50mm[1-5/8in.] or more) apart from power source wiring so that it is not influenced by electric noise from power source wiring. (Do not insert transmission cable and power source wire in the same conduit.)
③ Be sure to provide designated grounding work to outdoor unit.
④ Give some allowance to wiring for electrical part box of indoor and outdoor units, because the box is sometimes removed at the time of service work.
⑤ Never connect 380~415V(220~240V) power source to terminal block of transmission cable. If connected,electrical parts will be burnt out.
⑥ Use 2-core shield cable for transmission cable. If transmission cables of different systems are wired with the same multiple-core cable, the resultant poor transmitting and receiving will cause erroneous operations.

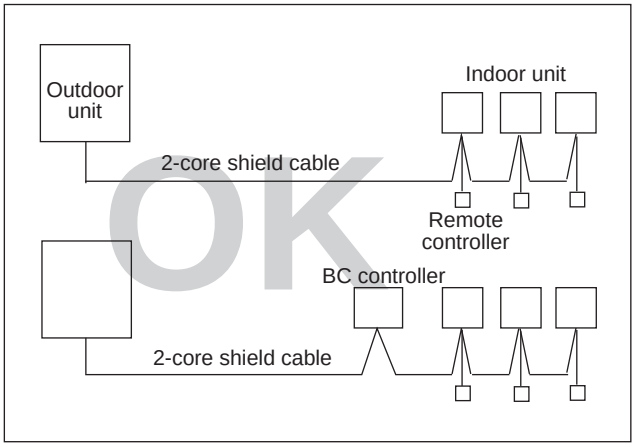

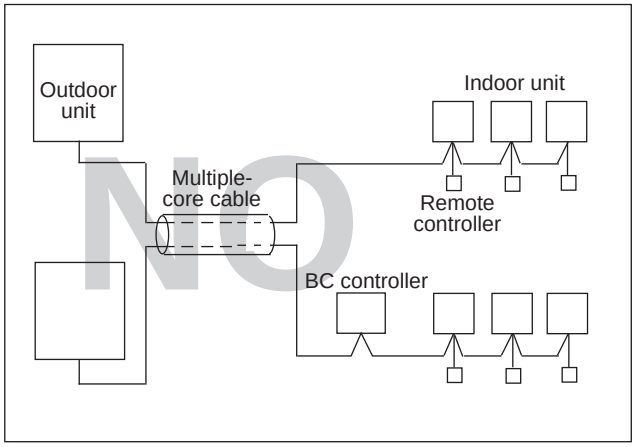

1-2. Power supply for Indoor unit and Outdoor unit

1-2-1. Electrical characteristics of Indoor unit

Symbols: MCA : Min.Circuit Amps (=1.25xFLA) FLA : Full Load Amps
IFM :Indoor Fan Motor Output : Fan motor rated output

System Y

PMFY-P-VBM-E	Power supply			IFM	
	Volts / Hz	Range +-10%	MCA(A)	Output(kW)	FLA(A)
PMFY-P20VBM-E	220-240V / 50Hz 220V / 60Hz	Max.: 264V Min.: 198V	0.25	0.028	0.20
PMFY-P25VBM-E			0.26	0.028	0.21
PMFY-P32VBM-E			0.26	0.028	0.21
PMFY-P40VBM-E			0.33	0.028	0.26

PLFY-P-VCM-E	Power supply			IFM	
	Volts / Hz	Range +-10%	MCA(A)	Output(kW)	FLA(A)
PLFY-P20VCM-E	220-240V / 50Hz	Max.: 264V Min.: 198V	0.29	0.011	0.23
PLFY-P25VCM-E			0.29	0.015	0.23
PLFY-P32VCM-E			0.35	0.020	0.28
PLFY-P40VCM-E			0.35	0.020	0.28

PLFY-P-VBM-E	Power supply			IFM	
	Volts / Hz	Range +-10%	MCA(A)	Output(kW)	FLA(A)
PLFY-P32VBM-E	220-240V / 50Hz 220V / 60Hz	Max.: 264V Min.: 198V	0.28	0.050	0.22
PLFY-P40VBM-E			0.36	0.050	0.29
PLFY-P50VBM-E			0.36	0.050	0.29
PLFY-P63VBM-E			0.45	0.050	0.36
PLFY-P80VBM-E			0.64	0.050	0.51
PLFY-P100VBM-E			1.25	0.120	1.00
PLFY-P125VBM-E			1.34	0.120	1.07

PLFY-P-VLMD-E	Power supply			IFM	
	Volts / Hz	Range +-10%	MCA(A) (50 / 60Hz)	Output(kW)	FLA(A) (50 / 60Hz)
PLFY-P20VLMD-E	220-240V / 50Hz 220-230V / 60Hz	Max.: 264V Min.: 198V	0.45 / 0.46	0.015	0.36 / 0.37
PLFY-P25VLMD-E			0.45 / 0.46	0.015	0.36 / 0.37
PLFY-P32VLMD-E			0.45 / 0.46	0.015	0.36 / 0.37
PLFY-P40VLMD-E			0.50 / 0.53	0.015	0.40 / 0.42
PLFY-P50VLMD-E			0.51 / 0.54	0.020	0.41 / 0.43
PLFY-P63VLMD-E			0.61 / 0.64	0.020	0.49 / 0.51
PLFY-P80VLMD-E			0.90 / 0.93	0.020	0.72 / 0.74
PLFY-P100VLMD-E			0.94 / 1.10	0.030	0.75 / 0.88
PLFY-P125VLMD-E			1.69 / 1.69	0.078x2	1.35 / 1.35

PEFY-P-VMR-E-L/R	Power supply			IFM	
	Volts / Hz	Range +-10%	MCA(A) (50 / 60Hz)	Output(kW)	FLA(A) (50 / 60Hz)
PEFY-P20VMR-E-L/R	220-240V / 50Hz 220-230V / 60Hz	Max.: 264V Min.: 198V	0.37 / 0.37	0.018	0.29 / 0.29
PEFY-P25VMR-E-L/R			0.37 / 0.37	0.018	0.29 / 0.29
PEFY-P32VMR-E-L/R			0.43 / 0.48	0.023	0.34 / 0.38

PEFY-P-VMS1-E	Power supply			IFM	
	Volts / Hz	Range +-10%	MCA(A) (50 / 60Hz)	Output(kW)	FLA(A) (50 / 60Hz)
PEFY-P15VMS1-E	220-240V / 50Hz 220-240V / 60Hz	Max.: 264V Min.: 198V	0.63 / 0.63	0.096	0.50 / 0.50
PEFY-P20VMS1-E			0.70 / 0.70	0.096	0.56 / 0.56
PEFY-P25VMS1-E			0.75 / 0.75	0.096	0.60 / 0.60
PEFY-P32VMS1-E			0.75 / 0.75	0.096	0.60 / 0.60
PEFY-P40VMS1-E			0.83 / 0.82	0.096	0.66 / 0.65
PEFY-P50VMS1-E			1.02 / 1.00	0.096	0.81 / 0.80
PEFY-P63VMS1-E			1.08 / 1.07	0.096	0.86 / 0.85

Symbols: MCA : Min.Circuit Amps (=1.25xFLA) FLA : Full Load Amps
IFM :Indoor Fan Motor Output : Fan motor rated output

PEFY-P-VMS1L-E	Power supply			IFM	
	Volts / Hz	Range +-10%	MCA(A) (50 / 60Hz)	Output(kW)	FLA(A) (50 / 60Hz)
PEFY-P15VMS1L-E	220-240V / 50Hz 220-240V / 60Hz	Max.: 264V Min.: 198V	0.46 / 0.46	0.096	0.37 / 0.37
PEFY-P20VMS1L-E			0.54 / 0.54	0.096	0.43 / 0.43
PEFY-P25VMS1L-E			0.59 / 0.59	0.096	0.47 / 0.47
PEFY-P32VMS1L-E			0.59 / 0.59	0.096	0.47 / 0.47
PEFY-P40VMS1L-E			0.68 / 0.68	0.096	0.54 / 0.54
PEFY-P50VMS1L-E			0.84 / 0.84	0.096	0.67 / 0.67
PEFY-P63VMS1L-E			0.91 / 0.91	0.096	0.73 / 0.73

PEFY-P-VMH-E	Power supply			IFM	
	Volts / Hz	Range +-10%	MCA(A) (50 / 60Hz)	Output(kW)	FLA(A) (50 / 60Hz)
PEFY-P40VMH-E	220-240V / 50Hz 220-240V / 60Hz	Max.: 264V Min.: 198V	1.21 / 1.61	0.08	0.97 / 1.29
PEFY-P50VMH-E			1.21 / 1.61	0.08	0.97 / 1.29
PEFY-P63VMH-E			1.49 / 1.95	0.12	1.19 / 1.56
PEFY-P71VMH-E			1.58 / 2.18	0.14	1.26 / 1.74
PEFY-P80VMH-E			1.85 / 2.40	0.18	1.48 / 1.92
PEFY-P100VMH-E			3.03 / 3.93	0.26	2.42 / 3.14
PEFY-P125VMH-E			3.03 / 3.93	0.26	2.42 / 3.14
PEFY-P140VMH-E			3.10 / 3.98	0.26	2.48 / 3.18
PEFY-P200VMH-E	380-415V / 50Hz 380-415V / 60Hz	Max.: 456V Min.: 342V	2.03 / 2.33	0.76	1.62 / 1.86
PEFY-P250VMH-E			2.50 / 2.88	1.08	2.00 / 2.30

PEFY-P-VMA-E	Power supply			IFM	
	Volts / Hz	Range +-10%	MCA(A)	Output(kW)	FLA(A)
PEFY-P20VMA-E	220-240V / 50Hz 220-240V / 60Hz	Max.: 264V Min.: 198V	1.03	0.085	0.82
PEFY-P25VMA-E			1.03	0.085	0.82
PEFY-P32VMA-E			1.18	0.085	0.95
PEFY-P40VMA-E			1.43	0.085	1.14
PEFY-P50VMA-E			1.54	0.085	1.23
PEFY-P63VMA-E			2.22	0.121	1.78
PEFY-P71VMA-E			2.46	0.121	1.97
PEFY-P80VMA-E			2.47	0.121	1.98
PEFY-P100VMA-E			3.30	0.244	2.64
PEFY-P125VMA-E			3.39	0.244	2.71
PEFY-P140VMA-E			3.29	0.244	2.63

PEFY-P-VMAL-E	Power supply			IFM	
	Volts / Hz	Range +-10%	MCA(A)	Output(kW)	FLA(A)
PEFY-P20VMAL-E	220-240V / 50Hz 220-240V / 60Hz	Max.: 264V Min.: 198V	0.92	0.085	0.74
PEFY-P25VMAL-E			0.92	0.085	0.74
PEFY-P32VMAL-E			1.07	0.085	0.86
PEFY-P40VMAL-E			1.32	0.085	1.06
PEFY-P50VMAL-E			1.40	0.085	1.12
PEFY-P63VMAL-E			2.08	0.121	1.67
PEFY-P71VMAL-E			2.32	0.121	1.86
PEFY-P80VMAL-E			2.36	0.121	1.89
PEFY-P100VMAL-E			3.19	0.244	2.55
PEFY-P125VMAL-E			3.27	0.244	2.62
PEFY-P140VMAL-E			3.17	0.244	2.53

PEFY-P-VMH-E-F	Power supply			IFM	
	Volts / Hz	Range +-10%	MCA(A) (50 / 60Hz)	Output(kW)	FLA(A) (50 / 60Hz)
PEFY-P80VMH-E-F	220-240V / 50Hz 208-230V / 60Hz	Max.: 264V Min.: 187V	0.92 / 1.15	0.09	0.73 / 0.92
PEFY-P140VMH-E-F			1.58 / 1.84	0.14	1.26 / 1.47
PEFY-P200VMH-E-F	380-415V / 50Hz 380-415V / 60Hz	Max.: 456V Min.: 342V	0.73 / 0.93	0.20	0.58 / 0.74
PEFY-P250VMH-E-F			0.85 / 1.08	0.23	0.68 / 0.86

Symbols: MCA : Min.Circuit Amps (=1.25xFLA) FLA : Full Load Amps
IFM :Indoor Fan Motor Output : Fan motor rated output

System Y

PKFY-P-VBM-E	Power supply			IFM	
	Volts / Hz	Range +-10%	MCA(A)	Output(kW)	FLA(A)
PKFY-P15VBM-E	220-240V / 50Hz 220V / 60Hz	Max.: 264V Min.: 198V	0.25	0.017	0.20
PKFY-P20VBM-E			0.25	0.017	0.20
PKFY-P25VBM-E			0.25	0.017	0.20

PKFY-P-VHM-E	Power supply			IFM	
	Volts / Hz	Range +-10%	MCA(A)	Output(kW)	FLA(A)
PKFY-P32VHM-E	220-240V / 50Hz 220V / 60Hz	Max.: 264V Min.: 198V	0.38	0.030	0.30
PKFY-P40VHM-E			0.38	0.030	0.30
PKFY-P50VHM-E			0.38	0.030	0.30

PKFY-P-VKM-E	Power supply			IFM	
	Volts / Hz	Range +-10%	MCA(A)	Output(kW)	FLA(A)
PKFY-P63VKM-E	220-240V / 50Hz 220V / 60Hz	Max.: 264V Min.: 198V	0.36	0.056	0.29
PKFY-P100VKM-E			0.63	0.056	0.50

PCFY-P-VKM-E	Power supply			IFM	
	Volts / Hz	Range +-10%	MCA(A)	Output(kW)	FLA(A)
PCFY-P40VKM-E	220-240V / 50Hz 220V / 60Hz	Max.: 264V Min.: 198V	0.35	0.090	0.28
PCFY-P63VKM-E			0.41	0.095	0.33
PCFY-P100VKM-E			0.81	0.160	0.65
PCFY-P125VKM-E			0.95	0.160	0.76

PFFY-P-VKM-E	Power supply			IFM	
	Volts / Hz	Range +-10%	MCA(A)	Output(kW)	FLA(A)
PFFY-P20VKM-E	220-240V / 50Hz	Max.: 264V Min.: 198V	0.25	0.03x2	0.20
PFFY-P25VKM-E			0.25	0.03x2	0.20
PFFY-P32VKM-E			0.25	0.03x2	0.20
PFFY-P40VKM-E			0.30	0.03x2	0.24

PFFY-P-VLEM-E	Power supply			IFM	
	Volts / Hz	Range +-10%	MCA(A) (50 / 60Hz)	Output(kW)	FLA(A) (50 / 60Hz)
PFFY-P20VLEM-E	220-240V / 50Hz 208-230V / 60Hz	Max.: 264V Min.: 187V	0.24 / 0.31	0.015	0.19 / 0.25
PFFY-P25VLEM-E			0.24 / 0.31	0.015	0.19 / 0.25
PFFY-P32VLEM-E			0.36 / 0.38	0.018	0.29 / 0.30
PFFY-P40VLEM-E			0.40 / 0.41	0.030	0.32 / 0.33
PFFY-P50VLEM-E			0.50 / 0.51	0.035	0.40 / 0.41
PFFY-P63VLEM-E			0.58 / 0.59	0.050	0.46 / 0.47

Symbols: MCA : Min.Circuit Amps (=1.25xFLA) FLA : Full Load Amps
IFM :Indoor Fan Motor Output : Fan motor rated output

PFFY-P-VLRM-E	Power supply			IFM	
	Volts / Hz	Range +-10%	MCA(A) (50 / 60Hz)	Output(kW)	FLA(A) (50 / 60Hz)
PFFY-P20VLRM-E	220-240V / 50Hz 208-230V / 60Hz	Max.: 264V Min.: 187V	0.24 / 0.31	0.015	0.19 / 0.25
PFFY-P25VLRM-E			0.24 / 0.31	0.015	0.19 / 0.25
PFFY-P32VLRM-E			0.36 / 0.38	0.018	0.29 / 0.30
PFFY-P40VLRM-E			0.40 / 0.41	0.030	0.32 / 0.33
PFFY-P50VLRM-E			0.50 / 0.51	0.035	0.40 / 0.41
PFFY-P63VLRM-E			0.58 / 0.59	0.050	0.46 / 0.47

PFFY-P-VLRMM-E	Power supply			IFM	
	Volts / Hz	Range +-10%	MCA(A) (50 / 60Hz)	Output(kW)	FLA(A) (50 / 60Hz)
PFFY-P20VLRMM-E	220-240V / 50Hz	Max.: 264V Min.: 198V	0.59 / 0.58	0.096	0.47 / 0.46
PFFY-P25VLRMM-E			0.59 / 0.58	0.096	0.47 / 0.46
PFFY-P32VLRMM-E			0.69 / 0.69	0.096	0.55 / 0.55
PFFY-P40VLRMM-E			0.78 / 0.76	0.096	0.62 / 0.61
PFFY-P50VLRMM-E			0.80 / 0.79	0.096	0.64 / 0.63
PFFY-P63VLRMM-E			0.93 / 0.93	0.096	0.74 / 0.74

GUF-RDH3	Power supply			IFM	
	Volts / Hz	Range +-10%	MCA(A) (50 / 60Hz)	Output(kW)	FLA(A) (50 / 60Hz)
GUF-50RD(H)3	220-240V / 50Hz 220V / 60Hz	Max.: 264V Min.: 198V	1.85 / 1.85	0.081x2	1.48 / 1.48
GUF-100RD(H)3			3.49 / 3.49	0.16x2	2.79 / 2.79

1-2-2. Electrical characteristics of Outdoor unit

PUHY-P-YHM	Unit Combination	Units			Power supply	Compressor		FAN	RLA (A) (50 / 60Hz)	
		Hz	Volts	Voltage range	MCA(A)	Output (kW)	SC (A)	Output (kW)	Cooling	Heating
PUHY-P200YHM-A(-BS)	-	50/60	380 400 415	Max : 456V Min : 342V	16.01	5.4	8	0.64	9.6/9.1/8.8	10.1/9.6/9.3
PUHY-P250YHM-A(-BS)	-				18.59	6.7		0.64	13.0/12.3/11.9	13.2/12.5/12.1
PUHY-P300YHM-A(-BS)	-				21.88	8.2		0.64	15.3/14.5/14.0	15.8/15.0/14.5
PUHY-P350YHM-A(-BS)	-				27.03	10.3		0.64	18.9/17.9/17.3	20.4/19.3/18.6
PUHY-P400YHM-A(-BS)	-				31.89	10.5		0.64	22.3/21.2/20.4	22.7/21.6/20.8
PUHY-P450YHM-A(-BS)	-				39.18	12.0		0.64	27.4/26.1/25.1	25.9/24.6/23.7
PUHY-P500YSHM-A(-BS)	PUHY-P250YHM-A(-BS)				39.75	6.7		0.64	27.8/26.4/25.4	27.6/26.3/25.3
	PUHY-P250YHM-A(-BS)					6.7		0.64		
PUHY-P550YSHM-A(-BS)	PUHY-P250YHM-A(-BS)				44.19	6.7		0.64	30.9/29.4/28.3	30.4/28.9/27.9
	PUHY-P300YHM-A(-BS)					8.2		0.64		
PUHY-P600YSHM-A(-BS)	PUHY-P250YHM-A(-BS)				45.19	6.7		0.64	31.6/30.0/28.9	33.6/31.9/30.7
	PUHY-P350YHM-A(-BS)					10.3		0.64		
PUHY-P650YSHM-A(-BS)	PUHY-P300YHM-A(-BS)				50.05	8.2		0.64	35.0/33.3/32.1	36.9/35.1/33.8
	PUHY-P350YHM-A(-BS)					10.3		0.64		
PUHY-P700YSHM-A(-BS)	PUHY-P350YHM-A(-BS)				54.20	10.3		0.64	37.9/36.0/34.7	40.0/38.0/36.6
	PUHY-P350YHM-A(-BS)					10.3		0.64		
PUHY-P750YSHM-A(-BS)	PUHY-P350YHM-A(-BS)				60.49	10.3		0.64	42.3/40.2/38.7	42.9/40.8/39.3
	PUHY-P400YHM-A(-BS)					10.5		0.64		
PUHY-P800YSHM-A(-BS)	PUHY-P350YHM-A(-BS)				66.78	10.3		0.64	46.7/44.4/42.8	43.3/41.2/39.7
	PUHY-P450YHM-A(-BS)					12.0		0.64		
PUHY-P850YSHM-A(-BS)	PUHY-P400YHM-A(-BS)				72.79	10.5		0.64	50.9/48.4/46.6	47.9/45.5/43.9
	PUHY-P450YHM-A(-BS)					12.0		0.64		
PUHY-P900YSHM-A(-BS)	PUHY-P450YHM-A(-BS)				80.37	12.0		0.64	56.2/53.4/51.5	51.1/48.5/46.8
	PUHY-P450YHM-A(-BS)					12.0		0.64		
PUHY-P950YSHM-A(-BS)	PUHY-P250YHM-A(-BS)				73.93	6.7		0.64	51.7/49.2/47.4	50.6/48.4/46.4
	PUHY-P300YHM-A(-BS)					8.2		0.64		
	PUHY-P400YHM-A(-BS)					10.5		0.64		
PUHY-P1000YSHM-A(-BS)	PUHY-P300YHM-A(-BS)				78.36	8.2		0.64	54.8/52.0/50.1	55.9/53.1/51.2
	PUHY-P300YHM-A(-BS)					8.2		0.64		
	PUHY-P400YHM-A(-BS)					10.5		0.64		
PUHY-P1050YSHM-A(-BS)	PUHY-P300YHM-A(-BS)				81.80	8.2		0.64	57.2/54.3/52.4	59.1/56.1/54.1
	PUHY-P350YHM-A(-BS)					10.3		0.64		
	PUHY-P400YHM-A(-BS)					10.5		0.64		
PUHY-P1100YSHM-A(-BS)	PUHY-P350YHM-A(-BS)				86.37	10.3		0.64	60.4/57.4/55.3	62.3/59.2/57.0
	PUHY-P350YHM-A(-BS)					10.3		0.64		
	PUHY-P400YHM-A(-BS)					10.5		0.64		
PUHY-P1150YSHM-A(-BS)	PUHY-P350YHM-A(-BS)				94.95	10.3		0.64	66.4/63.1/60.8	65.9/62.6/60.4
	PUHY-P350YHM-A(-BS)					10.3		0.64		
	PUHY-P450YHM-A(-BS)					12.0		0.64		
PUHY-P1200YSHM-A(-BS)	PUHY-P350YHM-A(-BS)				100.67	10.3		0.64	70.4/66.8/64.4	67.6/64.3/61.9
	PUHY-P400YHM-A(-BS)					10.5		0.64		
	PUHY-P450YHM-A(-BS)					12.0		0.64		
PUHY-P1250YSHM-A(-BS)	PUHY-P350YHM-A(-BS)				108.54	10.3		0.64	75.9/72.1/69.5	71.0/67.4/65.0
	PUHY-P450YHM-A(-BS)					12.0		0.64		
	PUHY-P450YHM-A(-BS)					12.0		0.64		

System Y

PUHY-EP-YHM	Unit Combination	Units			Power supply	Compressor		FAN	RLA (A) (50 / 60Hz)	
		Hz	Volts	Voltage range	MCA(A)	Output (kW)	SC (A)	Output (kW)	Cooling	Heating
PUHY-EP200YHM-A(-BS)	-	50/60	380 400 415	Max : 456V Min : 342V	16.01	5.4	8	0.64	8.7/8.3/8.0	9.7/9.2/8.9
PUHY-EP250YHM-A(-BS)	-				16.45	6.7		0.64	11.5/10.9/10.5	12.8/12.1/11.7
PUHY-EP300YHM-A(-BS)	-				19.88	8.3		0.64	13.9/13.2/12.7	15.6/14.8/14.3
PUHY-EP400YSHM-A(-BS)	PUHY-EP200YHM-A(-BS)				25.03	5.4		0.64	17.5/16.6/16.0	19.4/18.5/17.8
	PUHY-EP200YHM-A(-BS)					5.4		0.64		
PUHY-EP450YSHM-A1(-BS)	PUHY-EP200YHM-A(-BS)				28.60	5.4		0.64	20.0/19.0/18.3	22.0/20.9/20.1
	PUHY-EP250YHM-A(-BS)					6.7		0.64		
PUHY-EP500YSHM-A(-BS)	PUHY-EP200YHM-A(-BS)				32.46	5.4		0.64	22.7/21.5/20.8	25.5/24.2/23.4
	PUHY-EP300YHM-A(-BS)					8.3		0.64		
PUHY-EP550YSHM-A1(-BS)	PUHY-EP250YHM-A(-BS)				37.18	6.7		0.64	26.0/24.7/23.8	28.3/26.9/26.0
	PUHY-EP300YHM-A(-BS)					8.3		0.64		
PUHY-EP600YSHM-A(-BS)	PUHY-EP300YHM-A(-BS)				40.90	8.3		0.64	28.6/27.2/26.2	31.9/30.3/29.2
	PUHY-EP300YHM-A(-BS)					8.3		0.64		
PUHY-EP650YSHM-A(-BS)	PUHY-EP300YHM-A(-BS)				44.19	8.2		0.64	30.9/29.4/28.3	32.2/30.6/29.5
	PUHY-P350YHM-A(-BS)					10.3		0.64		
PUHY-EP700YSHM-A(-BS)	PUHY-EP200YHM-A(-BS)				50.62	5.4		0.64	35.4/33.6/32.4	33.7/32.0/30.9
	PUHY-EP200YHM-A(-BS)					5.4		0.64		
	PUHY-EP300YHM-A(-BS)					8.3		0.64		
PUHY-EP750YSHM-A1(-BS)	PUHY-EP200YHM-A(-BS)				49.19	5.4		0.64	34.4/32.7/31.5	37.4/35.5/34.3
	PUHY-EP250YHM-A(-BS)					6.7		0.64		
	PUHY-EP300YHM-A(-BS)					8.3		0.64		
PUHY-EP800YSHM-A(-BS)	PUHY-EP200YHM-A(-BS)				53.05	5.4		0.64	37.1/35.2/34.0	39.5/37.5/36.1
	PUHY-EP300YHM-A(-BS)					8.3		0.64		
	PUHY-EP300YHM-A(-BS)					8.3		0.64		
PUHY-EP850YSHM-A1(-BS)	PUHY-EP250YHM-A(-BS)				56.91	6.7		0.64	39.8/37.8/36.4	43.1/41.0/39.5
	PUHY-EP300YHM-A(-BS)					8.3		0.64		
	PUHY-EP300YHM-A(-BS)					8.3		0.64		
PUHY-EP900YSHM-A(-BS)	PUHY-EP300YHM-A(-BS)				59.92	8.3		0.64	41.9/39.8/38.4	47.0/44.7/43.1
	PUHY-EP300YHM-A(-BS)					8.3		0.64		
	PUHY-EP300YHM-A(-BS)					8.3		0.64		

1-3. Power cable specifications

Thickness of wire for main power supply, capacities of the switch and system impedance

	Model	Minimum wire thickness (mm^2)			Breaker for current leakage	Local swtich (A)		Breaker for wiring (NFB) (A)	Max..Permissive System Impedance
		Main cable	Branch	Ground		Capacity	Fuse		
Outdoor unit	PUHY-(E)P200YHM	4.0	-	4.0	30A 100mA 0.1sec. or less	25	25	30	*1
	PUHY-(E)P250YHM	4.0	-	4.0	30A 100mA 0.1sec. or less	32	32	30	*1
	PUHY-(E)P300YHM	4.0	-	4.0	30A 100mA 0.1sec. or less	32	32	30	*1
	PUHY-P350YHM	6.0	-	6.0	40A 100mA 0.1sec. or less	40	40	40	0.24Ω
	PUHY-P400YHM	10.0	-	10.0	60A 100mA 0.1sec. or less	63	63	60	0.24Ω
	PUHY-P450YHM	10.0	-	10.0	60A 100mA 0.1sec. or less	63	63	60	0.19Ω
Total operating current of the indoor unit	16A or less	1.5	1.5	1.5	20A 30mA 0.1sec. or less	16	16	20	(apply to IEC61000-3-3)
	25A or less	2.5	2.5	2.5	30A 30mA 0.1sec. or less	25	25	30	(apply to IEC61000-3-3)
	32A or less	4.0	4.0	4.0	40A 30mA 0.1sec. or less	32	32	40	(apply to IEC61000-3-3)

*1: Meet technical requirements of IEC61000-3-3

1. Use dedicated power supplies for the outdoor unit and indoor unit. Ensure OC and OS are wired individually.
2. Bear in mind ambient conditions (ambient temperature,direct sunlight, rain water,etc.) when proceeding with the wiring and connections.
3. The wire size is the minimum value for metal conduit wiring. If the voltage drops, use a wire that is one rank thicker in diameter. Make sure the power-supply voltage does not drop more than 10%.
4. Specific wiring requirements should adhere to the wiring regulations of the region.
5. Power supply cords of parts of appliances for outdoor use shall not be lighter than polychloroprene sheathed flexible cord (design 245 IEC57). For example, use wiring such as YZW.
6. A switch with at least 3 mm contact separation in each pole shall be provided by the Air Conditioner installer.

⚠WARNING

- Be sure to use specified wires for connections and ensure no external force is imparted to terminal connections. If connections are not fixed firmly, heating or fire may result.
- Be sure to use the appropriate type of overcurrent protection switch. Note that generated overcurrent may include some amount of direct current.

⚠CAUTION

- Some installation sites may require attachment of an earth leakage breaker for the inverter. If no earth leakage breaker is installed, there is a danger of electric shock.
- Do not use anything other than a breaker and fuse with the correct capacity. Using a fuse or wire of too large capacity may cause malfunction or fire.

Note

- This device is intended for the connection to a power supply system with a maximum permissible system impedance shown in the above table at the interface point (power service box) of the user's supply.
- The user must ensure that this device is connected only to a power supply system which fulfils the requirement above.
  If necessary, the user can ask the public power supply company for the system impedance at the interface point.
- This equipment complies with IEC 61000-3-12 provided that the short-circuit power Ssc is greater than or equal to Ssc(*2) at the interface point between the user's supply and the public system. It is the responsibility of the installer or user of the equipment to ensure, by consultation with the distribution network operator if necessary, that the equipment is connected only to a supply with a short-circuit power Ssc greater than or equal to Ssc(*2).

Ssc(*2)

Model	Ssc(MVA)
PUHY-(E)P200YHM	1.14
PUHY-(E)P250YHM	1.27
PUHY-(E)P300YHM	1.57
PUHY-P350YHM	2.24
PUHY-P400YHM	2.28
PUHY-P450YHM	2.80

1-4. Power supply examples

The local standards and/or regulations is applicable at a higher priority.

1-4-1. PUHY-P200-450YHM-A, PUHY-EP200-300YHM-A

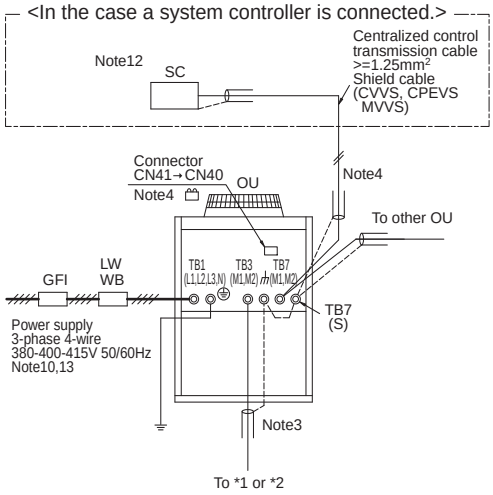

Note:
1 The transmission cable is not-polarity double-wire.
2 Symbol ◎ means a screw terminal for wiring.
3 The shield wire of transmission cable should be connected to the grounding terminal at Outdoor unit. All shield wire of M-Net transmission cable among Indoor units should be connected to the S terminal at Indoor unit or all shield wire should be connected together. The broken line at the scheme means shield wire.
4 When the Outdoor unit connected with system controller, power-supply to TB7 of the outdoor unit(s) is needed. The connector change from CN41 to CN40 at one of the outdoor units will enable the outdoor unit to supply power to TB7, or an extra power supplying unit PAC-SC51KUA should be used. The transmission cable (above 1.25mm^2, shielded, CVVS/CPEVS/MVVS) among Outdoor units and system controllers is called centralized control transmission cable. The shield wire of the centralized control transmission cable must be grounded at the Outdoor unit whose CN41 is changed to CN40.
5 MA R/C transmission cable (0.3-1.25mm^2) must be less than 200m in length, while ME R/C transmission cable (0.3-1.25mm^2) must be less than 10m in length. But transmission cable to the ME R/C can be extend using a M-NET cable (>=1.25mm^2) when the length is counted in the M-Net length. Both Compact MA and ME R/C transmission cables size 0.75~1.25mm^2 in thickness.
6 MA remote controller and ME remote controller should not be grouped together.
7 If using 1 or 2 (main/sub) MA remote controller to control more than 1 Indoor unit, use MA transmission cable to connect all the TB15 terminals of the Indoor units. It is called "Grouping".
If using 1 or 2 (main/sub) ME remote controller control more than 1 indoor unit, set address to Indoor unit and ME remote controller. For the method, refer to 2-4. "Address Setting".
8 Indoor board consumes power from TB3. The power balance should be considered according to System Design 2-3 "System configuration restrictions".
9 If Transmission booster is needed, be sure to connect the shield wires to the both sides to the booster.
10 The critical current for choosing power source equipment is approximate 1.4 times of total rated current of the Outdoor unit(s) or Indoor unit(s).
11 Numbers shown with ( ) indicates a diameter of the compact remote controller.
12 When System controller (SC) is connected to the system, turn the SW2-1 on.
13 The phases of electricity power must be confirmed to be right used. Phase-reverse, or phase-missing could break the controllers.

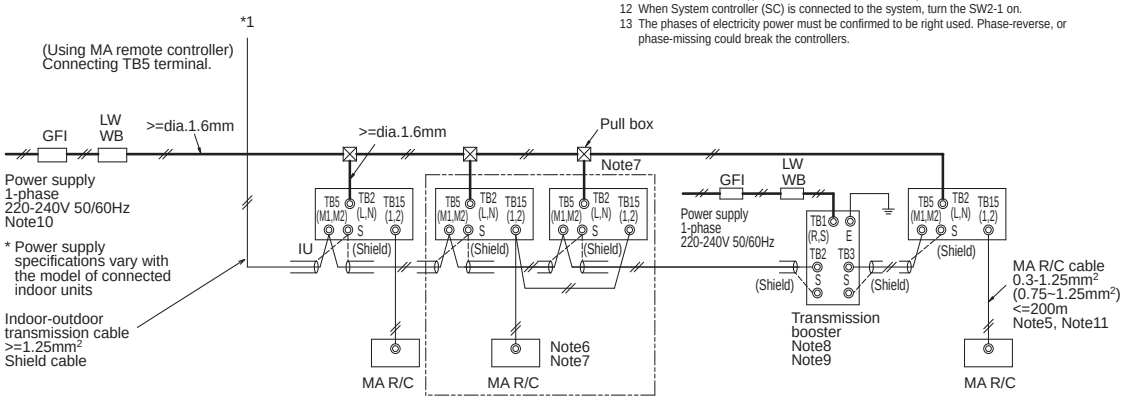

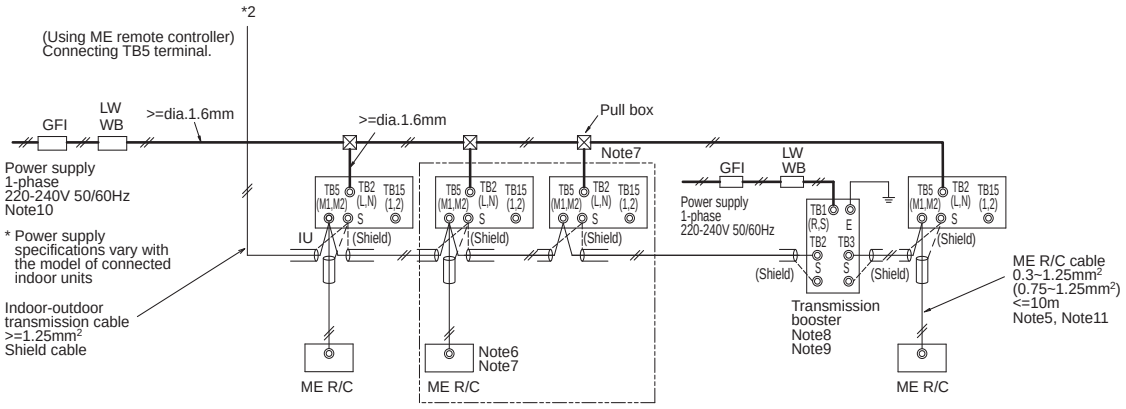

Symbol		Model	Ground-fault interrupter *1, *2	Local switch BC <A>	Local switch OCP*3 <A>	Wiring breaker (NFB) <A>	Minimum Wire thickness Power wire <mm2>	Minimum Wire thickness Earth wire <mm2>
GFI	Ground-fault interrupter	PUHY-(E)P200YHM	30A 100mA 0.1sec. or less	25	25	30	4	4
LW	Local switch	PUHY-(E)P250YHM	30A 100mA 0.1sec. or less	32	32	30	4	4
BC	Breaker capacity	PUHY-(E)P300YHM	30A 100mA 0.1sec. or less	32	32	30	4	4
OCP	Over-current protector	PUHY-P350YHM	40A 100mA 0.1sec. or less	40	40	40	6	6
WB	Wiring breaker	PUHY-P400YHM	60A 100mA 0.1sec. or less	63	63	60	10.0	10.0
NFB	Non-fuse breaker	PUHY-P450YHM	60A 100mA 0.1sec. or less	63	63	60	10.0	10.0
OU	Outdoor unit							
IU	Indoor unit							
SC	System controller							
MA R/C	MA remote controller							
ME R/C	ME remote controller							

*1 The Ground-fault interrupter should support Inverter circuit. (e.g. Mitsubishi Electric's NV-C series or equivalent).
*2 Ground-fault interrupter should combine using of local switch or wiring breaker.
*3 It shows data for B-type fuse of the breaker for current leakage.

The local standards and/or regulations is applicable at a higher priority.

1-4-2. PUHY-P500-900YSHM-A, PUHY-EP400,500,600,650YSHM-A,PUHY-EP450,550YSHM-A1

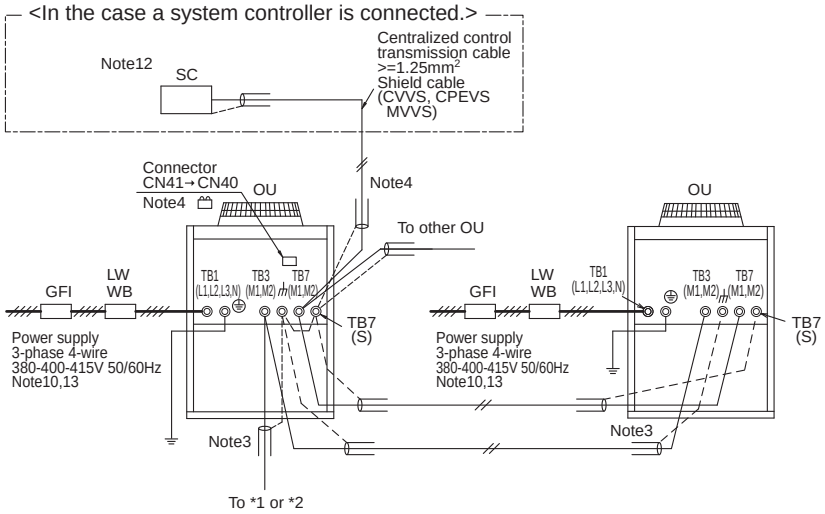

Note:
1 The transmission cable is not-polarity double-wire.
2 Symbol ◎ means a screw terminal for wiring.
3 The shield wire of transmission cable should be connected to the grounding terminal at Outdoor unit. All shield wire of M-Net transmission cable among Indoor units should be connected to the S terminal at Indoor unit or all shield wire should be connected together. The broken line at the scheme means shield wire.
4 When the Outdoor unit connected with system controller, power-supply to TB7 of the outdoor unit(s) is needed. The connector change from CN41 to CN40 at one of the outdoor units will enable the outdoor unit to supply power to TB7, or an extra power supplying unit PAC-SC51KUA should be used. The transmission cable (above 1.25mm^2, shielded, CVVS/CPEVS/MVVS) among Outdoor units and system controllers is called centralized control transmission cable. The shield wire of the centralized control transmission cable must be grounded at the Outdoor unit whose CN41 is changed to CN40.
5 MA R/C transmission cable (0.3-1.25mm^2) must be less than 200m in length, while ME R/C transmission cable (0.3-1.25mm^2) must be less than 10m in length. But transmission cable to the ME R/C can be extend using a M-NET cable (>=1.25mm^2) when the length is counted in the M-Net length. Both Compact MA and ME R/C transmission cables size 0.75~1.25mm^2 in thickness.
6 MA remote controller and ME remote controller should not be grouped together.
7 If using 1 or 2 (main/sub) MA remote controller to control more than 1 Indoor unit, use MA transmission cable to connect all the TB15 terminals of the Indoor units. It is called "Grouping".
If using 1 or 2 (main/sub) ME remote controller control more than 1 indoor unit, set address to Indoor unit and ME remote controller. For the method, refer to 2-4. "Address Setting".
8 Indoor board consumes power from TB3. The power balance should be considered according to System Design 2-3 "System configuration restrictions".
9 If Transmission booster is needed, be sure to connect the shield wires to the both sides to the booster.
10 The critical current for choosing power source equipment is approximate 1.4 times of total rated current of the Outdoor unit(s) or Indoor unit(s).
11 Numbers shown with ( ) indicates a diameter of the compact remote controller.
12 When System controller (SC) is connected to the system, turn the SW2-1 on.
13. The phases of electricity power must be confirmed to be right used. Phase-reverse, or phase-missing could break the controllers.

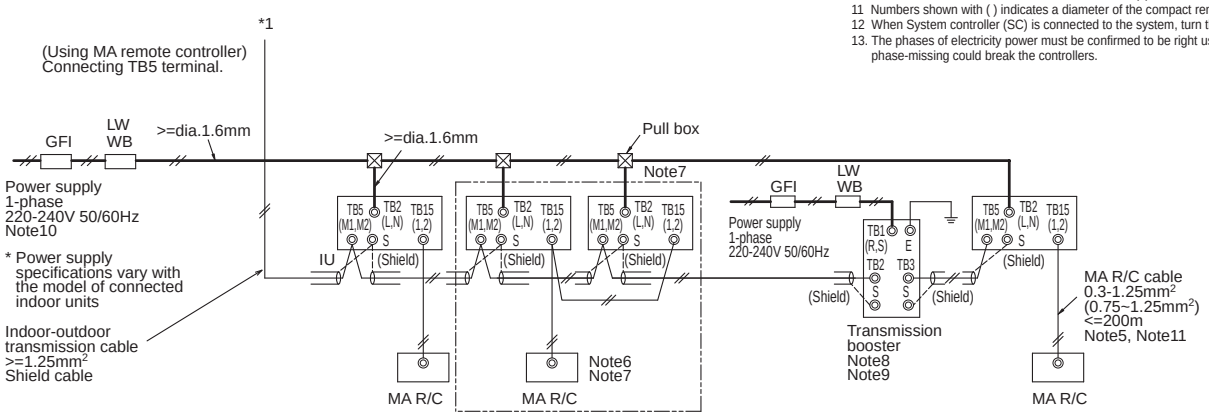

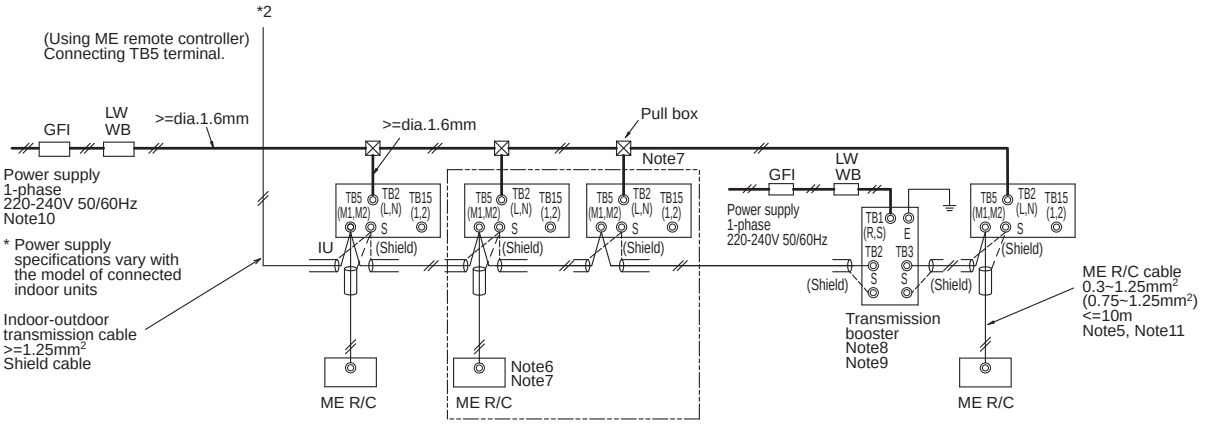

Symbol		Model	Ground-fault interrupter *1, *2	Local switch BC <A>	Local switch OCP*3 <A>	Wiring breaker (NFB) <A>	Minimum Wire thickness Power wire <mm2>	Minimum Wire thickness Earth wire <mm2>
GFI	Ground-fault interrupter	PUHY-(E)P200YHM	30A 100mA 0.1sec. or less	25	25	30	4	4
LW	Local switch	PUHY-(E)P250YHM	30A 100mA 0.1sec. or less	32	32	30	4	4
BC	Breaker capacity	PUHY-(E)P300YHM	30A 100mA 0.1sec. or less	32	32	30	4	4
OCP	Over-current protector	PUHY-P350YHM	40A 100mA 0.1sec. or less	40	40	40	6	6
WB	Wiring breaker	PUHY-P400YHM	60A 100mA 0.1sec. or less	63	63	60	10.0	10.0
NFB	Non-fuse breaker	PUHY-P450YHM	60A 100mA 0.1sec. or less	63	63	60	10.0	10.0
OU	Outdoor unit							
IU	Indoor unit							
SC	System controller							
MA R/C	MA remote controller							
ME R/C	ME remote controller							

*1 The Ground-fault interrupter should support Inverter circuit. (e.g. Mitsubishi Electric's NV-C series or equivalent).
*2 Ground-fault interrupter should combine using of local switch or wiring breaker.
*3 It shows data for B-type fuse of the breaker for current leakage.

The local standards and/or regulations is applicable at a higher priority.

1-4-3. PUHY-P950-1250YSHM-A, PUHY-EP700,800,900YSHM-A,PUHY-EP750,850YSHM-A1

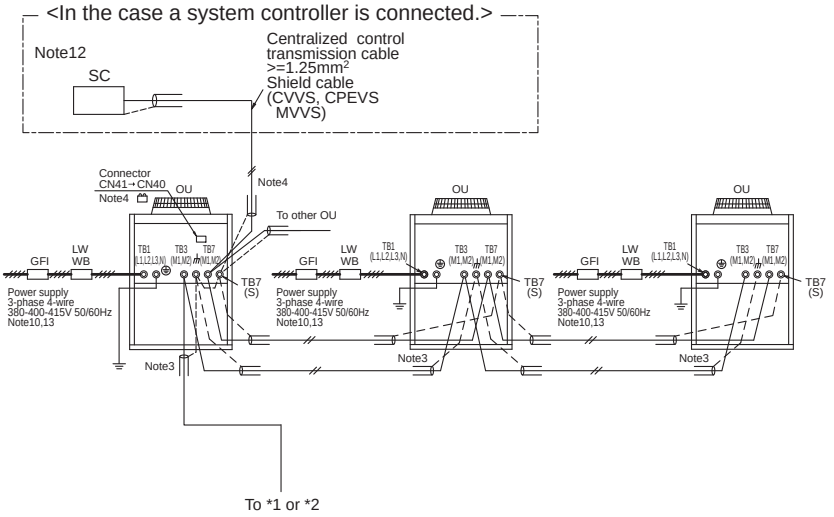

Note:
1 The transmission cable is not-polarity double-wire.
2 Symbol ◎ means a screw terminal for wiring.
3 The shield wire of transmission cable should be connected to the grounding terminal at Outdoor unit. All shield wire of M-Net transmission cable among Indoor units should be connected to the S terminal at Indoor unit or all shield wire should be connected together. The broken line at the scheme means shield wire.
4 When the Outdoor unit connected with system controller, power-supply to TB7 of the outdoor unit(s) is needed. The connector change from CN41 to CN40 at one of the outdoor units will enable the outdoor unit to supply power to TB7, or an extra power supplying unit PAC-SC51KUA should be used. The transmission cable (above 1.25mm^2, shielded, CVVS/CPEVS/MVVS) among Outdoor units and system controllers is called centralized control transmission cable. The shield wire of the centralized control transmission cable must be grounded at the Outdoor unit whose CN41 is changed to CN40.
5 MA R/C transmission cable (0.3-1.25mm^2) must be less than 200m in length, while ME R/C transmission cable (0.3-1.25mm^2) must be less than 10m in length. But transmission cable to the ME R/C can be extend using a M-NET cable (>=1.25mm^2) when the length is counted in the M-Net length. Both Compact MA and ME R/C transmission cables size 0.75~1.25mm^2 in thickness.
6 MA remote controller and ME remote controller should not be grouped together.
7 If using 1 or 2 (main/sub) MA remote controller to control more than 1 Indoor unit, use MA transmission cable to connect all the TB15 terminals of the Indoor units. It is called "Grouping".
If using 1 or 2 (main/sub) ME remote controller control more than 1 indoor unit, set address to Indoor unit and ME remote controller. For the method, refer to 2-4. "Address Setting".
8 Indoor board consumes power from TB3. The power balance should be considered according to System Design 2-3 "System configuration restrictions".
9 If Transmission booster is needed, be sure to connect the shield wires to the both sides to the booster.
10 The critical current for choosing power source equipment is approximate 1.4 times of total rated current of the Outdoor unit(s) or Indoor unit(s).
11 Numbers shown with ( ) indicates a diameter of the compact remote controller.
12 When System controller (SC) is connected to the system, turn the SW2-1 on.
13. The phases of electricity power must be confirmed to be right used. Phase-reverse, or phase-missing could break the controllers.

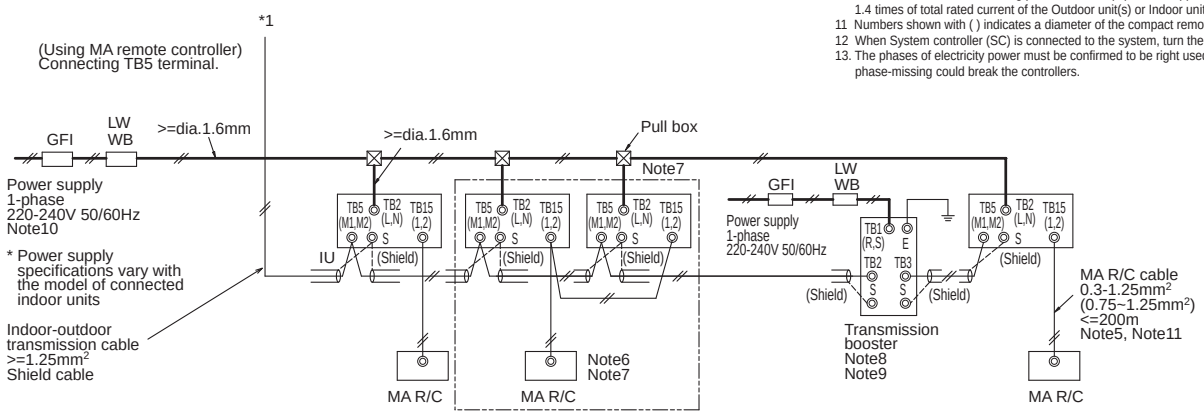

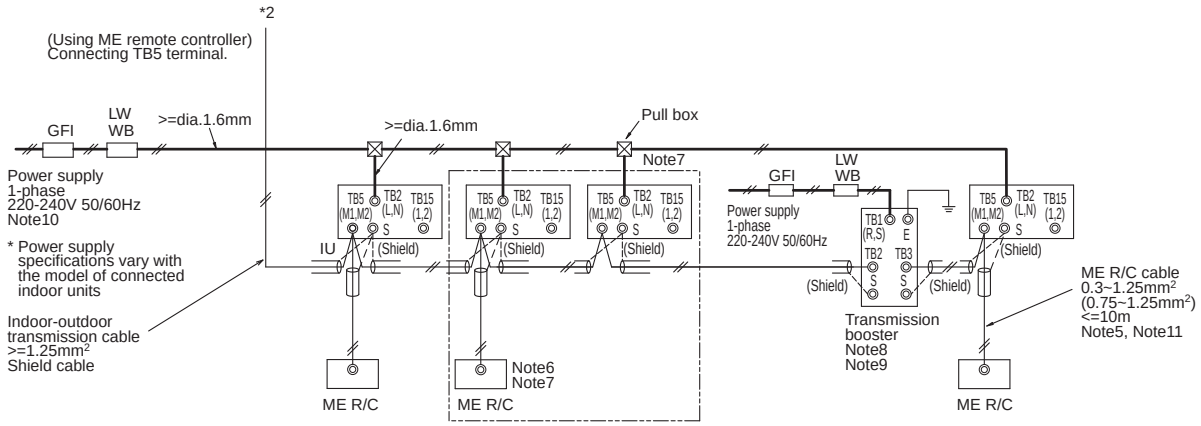

Symbol	
GFI	Ground-fault interrupter
LW	Local switch
BC	Breaker capacity
OCP	Over-current protector
WB	Wiring breaker
NFB	Non-fuse breaker
OU	Outdoor unit
IU	Indoor unit
SC	System controller
MA R/C	MA remote controller
ME R/C	ME remote controller

Model	Ground-fault interrupter *1, *2	Local switch BC <A>	Local switch OCP*3 <A>	Wiring breaker (NFB) <A>	Minimum Wire thickness Power wire <mm2>	Minimum Wire thickness Earth wire <mm2>
PUHY-(E)P200YHM	30A 100mA 0.1sec. or less	25	25	30	4	4
PUHY-(E)P250YHM	30A 100mA 0.1sec. or less	32	32	30	4	4
PUHY-(E)P300YHM	30A 100mA 0.1sec. or less	32	32	30	4	4
PUHY-P350YHM	40A 100mA 0.1sec. or less	40	40	40	6	6
PUHY-P400YHM	60A 100mA 0.1sec. or less	63	63	60	10.0	10.0
PUHY-P450YHM	60A 100mA 0.1sec. or less	63	63	60	10.0	10.0

*1 The Ground-fault interrupter should support Inverter circuit. (e.g. Mitsubishi Electric's NV-C series or equivalent).
*2 Ground-fault interrupter should combine using of local switch or wiring breaker.
*3 It shows data for B-type fuse of the breaker for current leakage.

2-1. Transmission cable length limitation

2-1-1. Using MA Remote controller

Long transmission cable causes voltage down, therefore, the length limitation should be obeyed to secure proper transmission.

Max. length via Outdoor (M-NET cable)	L1+L2+L3+L4, L1+L2+L6+L7, L3+L4+L6+L7	<=500m[1640ft.]	1.25mm^2 [AWG16] or thicker
Max. length to Outdoor (M-NET cable)	L1+L8, L3+L4, L6, L2+L6+L8, L7	<=200m[656ft.]	1.25mm^2 [AWG16] or thicker
Max. length from MA to Indoor	a1+a2, a1+a2+a3+a4	<=200m[656ft.]	0.3-1.25 mm^2 [AWG22-16]
24VDC to AG-150A	n	<=50m[164ft.]	0.75-2.0 mm^2 [AWG18-14]

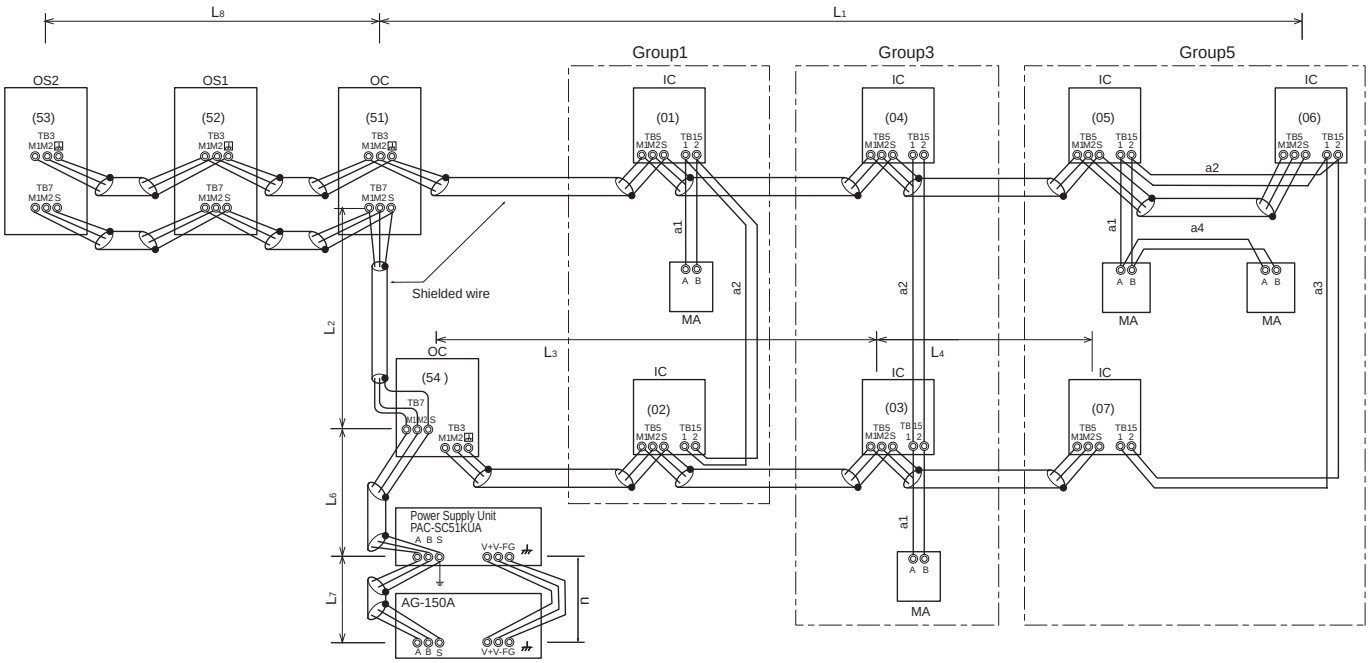

OC, OS1, OS2 : Outdoor unit controller; IC: Indoor unit controller; MA: MA remote controller

2-1-2. Using ME Remote controller

Long transmission cable causes voltage down, therefore, the length limitation should be obeyed to secure proper transmission.

Max. length via Outdoor (M-NET cable)	L1+L2+L3+L4, L1+L2+L6+L7,L1+L2+L3+L5, L3+L4+L6+L7	<=500m[1640ft.]	1.25mm^2 [AWG16] or thicker
Max. length to Outdoor (M-NET cable)	L1+L8, L3+L4, L6, L2+L6+L8, L7, L3+L5	<=200m[656ft.]	1.25mm^2 [AWG16] or thicker
Max. length from ME to Indoor	e1, e2+e3, e4	<=10m[32ft.]*1	0.3-1.25 mm^2 [AWG22-16] *1
24VDC to AG-150A	n	<=50m[164ft.]	0.75-2.0 mm^2 [AWG18-14]

*1. If the length from ME to Indoor exceed 10m, use 1.25 mm^2 [AWG16] shielded cable, but the total length should be counted into Max. length via Outdoor.

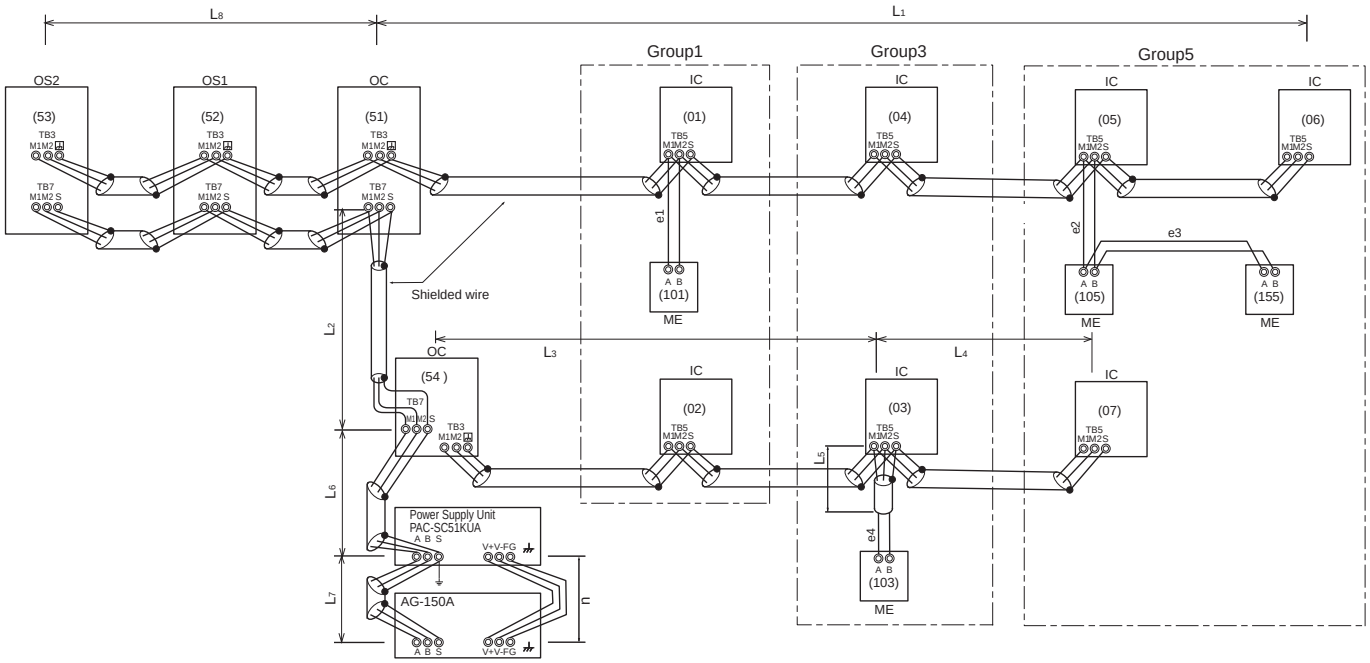

OC, OS1, OS2: Outdoor unit controller; IC: Indoor unit controller; ME: ME remote controller

2-2. Transmission cable specifications

	Transmission cables (Li)	ME Remote controller cables	MA Remote controller cables
Type of cable	Shielding wire (2-core) CVVS, CPEVS or MVVS	Sheathed 2-core cable (unshielded) CVV	
Cable size	More than 1.25mm^2 [AWG16]	0.3～1.25mm^2 [AWG22～16] (0.75～1.25mm^2 [AWG18~16])*1	0.3～1.25mm^2 [AWG22～16] (0.75～1.25mm^2 [AWG18~16])*1
Remarks	—	When 10m [32ft] is exceeded, use cables with the same specification as transmission cables.	Max length : 200m [656ft]

*1 Connected with simple remote controller.

CVVS, MVVS : PVC insulated PVC jacketed shielded control cable
CPEVS : PE insulated PVC jacketed shielded communication cable
CVV : PV insulated PVC sheathed control cable

2-3. System configuration restrictions

2-3-1. Common restrictions for the CITYMULTI system

For each Outdoor unit, the maximum connectable quantity of Indoor unit is specified at its Specifications table.

A) 1 Group of Indoor units can have 1-16 Indoor units;
*OA processing unit GUF-RD(H) is considered as Indoor unit.

B) Maximum 2 remote controllers for 1 Group; (MA/ME remote controllers cannot be present together in 1group.)

C) 1 LOSSNAY unit can interlock maximum 16 Indoor units; 1 Indoor unit can interlock only 1 LOSSNAY unit.

D) Maximum 3 System controllers are connectable when connecting to TB3 of the Outdoor unit.

E) Maximum 3 System controllers are connectable when connecting to TB7 of the Outdoor unit, if the transmission power is supplied by the Outdoor unit.

F) 4 System controllers or more are connectable when connecting to TB7 of the Outdoor unit, if the transmission power is supplied by the power supply unit PAC-SC51KUA. Details refer to 2-3-3-C.
*System controller connected as described in D) and E) would have a risk that the failure of connected Outdoor unit would stop power supply to the System controller.

2-3-2. Ensuring proper communication power for M-NET

In order to ensure proper communication among Outdoor unit, Indoor unit, LOSSNAY, and OA processing unit GUF-RD(H), and Controllers, the transmission power situation for the M-NET should be observed. In some cases, Transmission booster should be used. Taking the power consumption of Indoor unit sized P20-P140 as 1, the equivalent power consumption or supply of others are listed at Table 2-3-1 and Table 2-3-2.

Table 2-3-1 The equivalent power consumption

Indoor, OA unit	Indoor unit	BC controller	MA RC. LOSSNAY	ME Remote Contr.	Timers, System Contr.		ON/OFF Contr.	MN Conrerter	
Sized P15-P140 GUF-50, 100	Sized P200,P250	CMB	PAR-21MAA PAC-YT51CRA(B) PAR-FA32MA LGH-RX-E PZ-60DR-E	PAR-F27MEA PAC-SE51CRA PZ-52SF-E	PAC-SC30GRA PAC-SF44SRA PAC-YT34STA AG-150A	GB-50A	PAC-YT40ANRA	CMS -MNF-B	CMS -MNG-E
1	7	2	0	1/4	1/2	3	1	1/2	2

*RC : Remote Controller

Table 2-3-2 The equivalent power supply

Transmission Booster	Power supply unit	Expansion controller	BM ADAPTER	Outdoor unit	Outdoor unit
PAC-SF46EPA	PAC-SC51KUA	PAC-YG50ECA	BAC-HD150	Connector TB3 and TB7 total *	Connector TB7 only
25	5	6	6	32	6

*If PAC-SC51KUA is used to supply power at TB7 side, no power supply need from Outdoor unit at TB7, Connector TB3 itself will therefore have 32. Not applicable to the PUMY model.

With the equivalent power consumption values in Table 2-3-1 and Table 2-3-2, PAC-SF46EPA can be designed into the air-conditioner system to ensure proper system communication according to 2-3-2-A, B, C.

2-3-2-A) Firstly, count from TB3 at TB3 side the total quantity of Indoor units, OA process units and ME remote controller, Timers and System controllers. If the total quantity reaches 40, a PAC-SF46EPA should be set. In this case, Indoor unit sized P200, 250 is counted as 7 Indoor units, but MA remote controller(s), LOSSNAY, PZ-60DR-E is NOT counted.

2-3-2-B) Secondly, count from TB7 side to TB3 side the total transmission power consumption. If the total power consumption reaches 32, a PAC-SF46EPAshould be set. Yet, if a PAC-SC51KUAis used to supply power at TB7 side, count from TB3 side only.

2-3-2-C) Thirdly, count from TB7 at TB7 side the total transmission power consumption, If the total power consumption reaches 6, a PAC-SF46EPA should be set.

■ System example

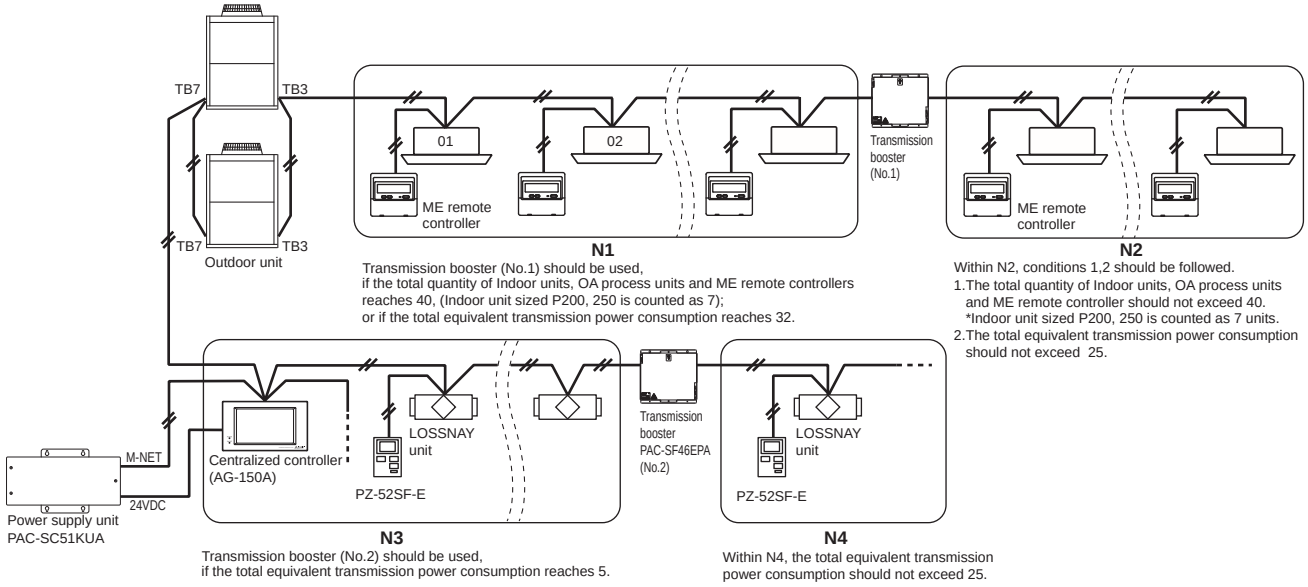

2-3-3. Ensuring proper power supply to System controller

The power to System controller (excluding LMAP02-E) is supplied via M-NET transmission line. M-NET transmission line at TB7 side is called Centralized control transmission line while one at TB3 side is called Indoor-Outdoor transmission line. There are 3 ways to supply power to the System controller .
A) Connecting to TB3 of the Outdoor unit and receiving power from the Outdoor unit.
B) Connecting to TB7 of the Outdoor unit and receiving power from the Outdoor unit.
C) Connecting to TB7 of the Outdoor unit but receiving power from power supply unit PAC-SC51KUA.

2-3-3-A. When connecting to TB3 of the Outdoor unit and receiving power from the Outdoor unit.

Maximum 3 System controllers can be connected to TB3.
If there is more than 1 Outdoor unit, it is necessary to replace power supply switch connector CN41 with CN40 on one Outdoor unit.

Fig. 2-3-3-A

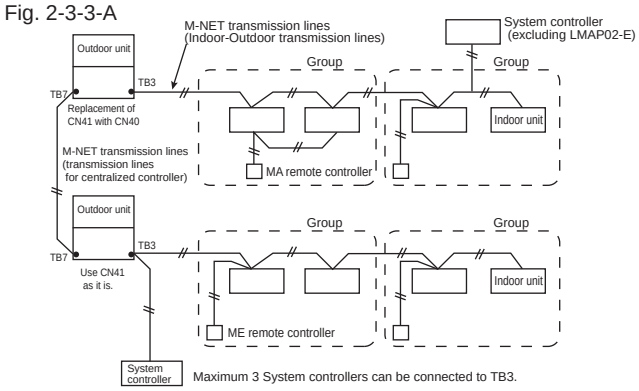

2-3-3-B. When connecting to TB7 of the Outdoor unit and receiving power from the Outdoor unit.

Maximum 3 System controllers can be connected to TB7 and receiving power from the Outdoor unit.
It is necessary to replace power supply switch connector CN41 with CN40 on one Outdoor unit.

Fig. 2-3-3-B

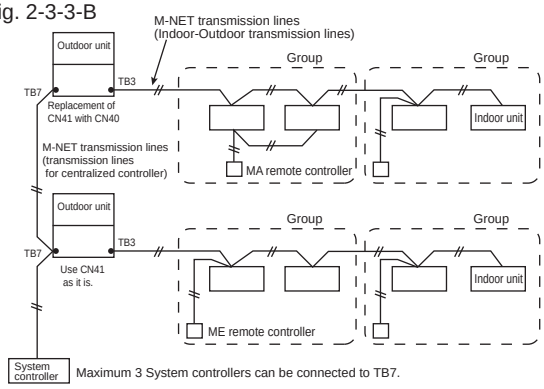

2-3-3-C. When connecting to TB7 of the Outdoor unit but receiving power from PAC-SC51KUA.

When using PAC-SC51KUA to supply transmission power, the power supply connector CN41 on the Outdoor units should be kept as it is. It is also a factory setting.
1 PAC-SC51KUA supports maximum 1 AG-150A unit due to the limited power 24VDC at its TB3.
However, 1 PAC-SC51KUA supplies transmission power at its TB2 equal to 5 Indoor units, which is referable at Table 2-3-2.
If PZ-52SF-E, Timers, System controller, ON/OFF controller connected to TB7 consume transmission power more than 5 (Indoor units), Transmission booster PAC-SF46EPA is needed. PAC-SF46EPA supplies transmission power equal to 25 Indoor units.

Fig. 2-3-3-C

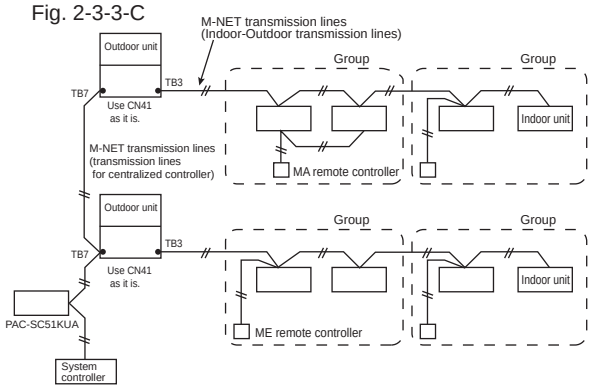

⚠ CAUTION

AG-150A*1 is recommended to connect to TB7 because it performs back-up to a number of data.
In an air conditioner system has more than 1 Outdoor units, AG-150A receiving transmission power through TB7 on one of the Outdoor units would have a risk that the connected Outdoor unit failure would stop power supply to AG-150A, and disrupt the whole system.
When applying apportioned electric power function, AG-150A is necessary to connected to TB7 and has its own power supply unit PAC-SC51KUA.*2
*1: AG-150A is an example model of system controllers.
*2: Power supply unit PAC-SC51KUA is for AG-150A.

2-3-4. Power supply to LM adapter LMAP02-E

1-phase 220-240V AC power supply is needed.
The power supply unit PAC-SC51KUA is not necessary when connecting only the LMAP02-E. Yet, make sure to change the power supply changeover connector CN41 to CN40 on the LM adapter.

2-3-5. Power supply to expansion controller

1-phase 100-240VAC power supply is needed.
The power supply unit PAC-SC51KUA is not necessary.
The expansion controller supplies power through TB3, which equals 6 indoor units. (refer to Table 2-3-2)

2-3-6. Power supply to BM ADAPTER

1-phase 100-240VAC power supply is needed.
The power supply unit PAC-SC51KUA is not necessary when only BM ADAPTER is connected.
Yet, make sure to move the power jumper from CN41 to CN40 on the BM ADAPTER.

2-4. Address setting

2-4-1. Switch operation

In order to constitute CITY MULTI in a complete system, switch operation for setting the unit address No. and connection No. is required.

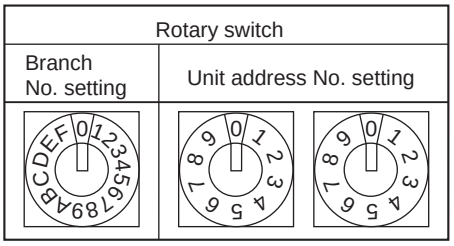

① Address No. of outdoor unit, indoor unit and remote controller.
The address No. is set at the address setting board.
In the case of R2 system, it is necessary to set the same No. at the branch No. switch of indoor unit as that of the BC controller connected. (When connecting two or more branches, use the lowest branch No.)

② Caution for switch operations

- Be sure to shut off power source before switch setting. If operated with power source on, switch can not operate properly.
- No units with identical unit address shall exist in one whole air conditioner system. If set erroneously, the system can not operate.

③ MA remote controller

- When connecting only one remote controller to one group, it is always the main remote controller.
  When connecting two remote controllers to one group, set one remote controller as the main remote controller and the other as the sub remote controller.
- The factory setting is "Main".

PAR-21MAA
The MA remote controller does not have the switches listed above.
Refer to the installation manual for the function setting.

PAC-YT51CRB

Setting the dip switches

There are switches on the front of the remote controller. Remote controller Main/Sub and other function settings are performed using these switches. Ordinarily, only change the Main/Sub setting of SW1.
(The factory settings are all "ON".)

SW No	SW contents Main	ON	OFF	Comment
1	Remote controller Main/Sub setting	Main	Sub	Set one of the two remote controllers at one group to "Main"
2	Temperature display units setting	Celsius	Fahrenheit	When the temperature is displayed in [Fahrenheit], set to "No".
3	Cooling/heating display in AUTO mode	Yes	No	When you do not want to display "Cooling" and "Heating" in the Auto mode, set to "No".

2-4-2. Rule of setting address

Unit		Address setting	Example	Note
Indoor unit		01 ~ 50	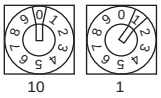	Use the most recent address within the same group of indoor units. Make the indoor units address connected to the BC controller (Sub) larger than the indoor units address connected to the BC controller (Main). If applicable, set the sub BC controllers in an PURY system in the following order: (1) Indoor unit to be connected to the BC controller (Main) (2) Indoor unit to be connected to the BC controller (No.1 Sub) (3) Indoor unit to be connected to the BC controller (No.2 Sub) Set the address so that (1)<(2)<(3)
Outdoor unit		51 ~ 99, 100 (Note1)	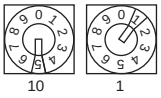	The smallest address of indoor unit in same refrigerant system + 50 Assign sequential address numbers to the outdoor units in one refrigerant circuit system. OC, OS1 and OS2 are automatically detected. (Note 2) ∗ Please reset one of them to an address between 51 and 99 when two addresses overlap. ∗ The address automatically becomes "100" if it is set as "01~ 50"
BC controller (Main)		52 ~ 99, 100	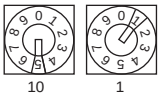	The address of outdoor unit + 1 ∗ Please reset one of them to an address between 51 and 99 when two addresses overlap. ∗ The address automatically becomes "100" if it is set as "01~ 50"
BC controller (Sub)		52 ~ 99, 100	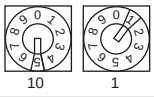	Lowest address within the indoor units connected to the BC controller (Sub) plus 50.
Local remote controller	ME, LOSSNAY Remote controller (Main)	101 ~ 150	1 Fixed 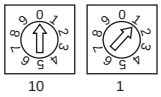	The smallest address of indoor unit in the group + 100 ∗ The place of "100" is fixed to "1"
Local remote controller	ME, LOSSNAY Remote controller (Sub)	151 ~ 199, 200	1 Fixed 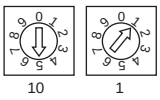	The address of main remote controller + 50 ∗ The address automatically becomes "200" if it is set as "00"
System controller	Group remote controller	201 ~ 250	2 Fixed 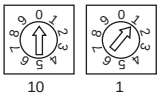	The smallest group No. to be managed + 200
System controller	System remote controller	000, 201 ~ 250	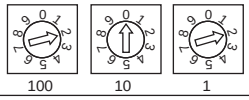	
System controller	ON/OFF remote controller	000, 201 ~ 250	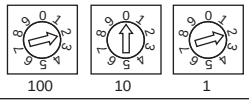	The smallest group No. to be managed + 200 ∗ The smallest group No. to be managed is changeable.
System controller	AG-150A GB-50A	000, 201 ~ 250	0,2 0~5 0~9 100 10 1	
System controller	PAC-YG50ECA	000, 201 ~ 250	0,2 0~5 0~9 100 10 1	∗ Settings are made on the initial screen of AG-150A.
System controller	BAC-HD150	000, 201 ~ 250	0,2 0~5 0~9 100 10 1	∗ Settings are made with setting tool of BM ADAPTER.
System controller	LMAP02-E	201 ~ 250	2 Fixed 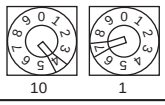	

Note1: To set the address to "100", set it to "50"
Note2: Outdoor units OC, OS1 and OS2 in one refrigerant circuit system are automatically detected.
OC, OS1 and OS2 are ranked in descending order of capacity. If units are the same capacity, they are ranked in ascending order of their address.

System Y

2-4-3. System examples

Factory setting

Original switch setting of the outdoors, indoors, controllers, LMAP and BM ADAPTER at shipment is as follows.

- Outdoor unit : Address: 00, CN41: U (Jumper), DipSW2-1: OFF
- Indoor unit : Address: 00
- ME remote controller : Address: 101
- LMAP : Address: 247, CN41: U (Jumper), DipSW1-2: OFF
- BM ADAPTER : Address: 00

Setting at the site

- DipSW2-1(Outdoor) : When the System Controller is used, all the Dip SW2-1 at the outdoor units should be set to "ON". * Dip SW2-1 remains OFF when only LMAP02-E is used.
- DipSW1-2(LMAP) : When the LMAP is used together with System Controller, DipSW1-2 at the LMAP should be set to "ON".
- CN40/CN41 : Change jumper from CN41 to CN 40 at outdoor control board will activate central transmission power supply to TB7;
  (Change jumper at only one outdoor unit when activating the transmission power supply without using a power supply unit.)
  Change jumper from CN41 to CN 40 at LMAP will activate transmission power supply to LMAP itself;
  Power supply unit is recommended to use for a system having more than 1 outdoor unit, because the central transmission power supply from TB7 of one of outdoor units is risking that the outdoor unit failure may let down the whole system controller system.

2-4-3-1. MA remote controller, Single-refrigerant-system, No System Controller

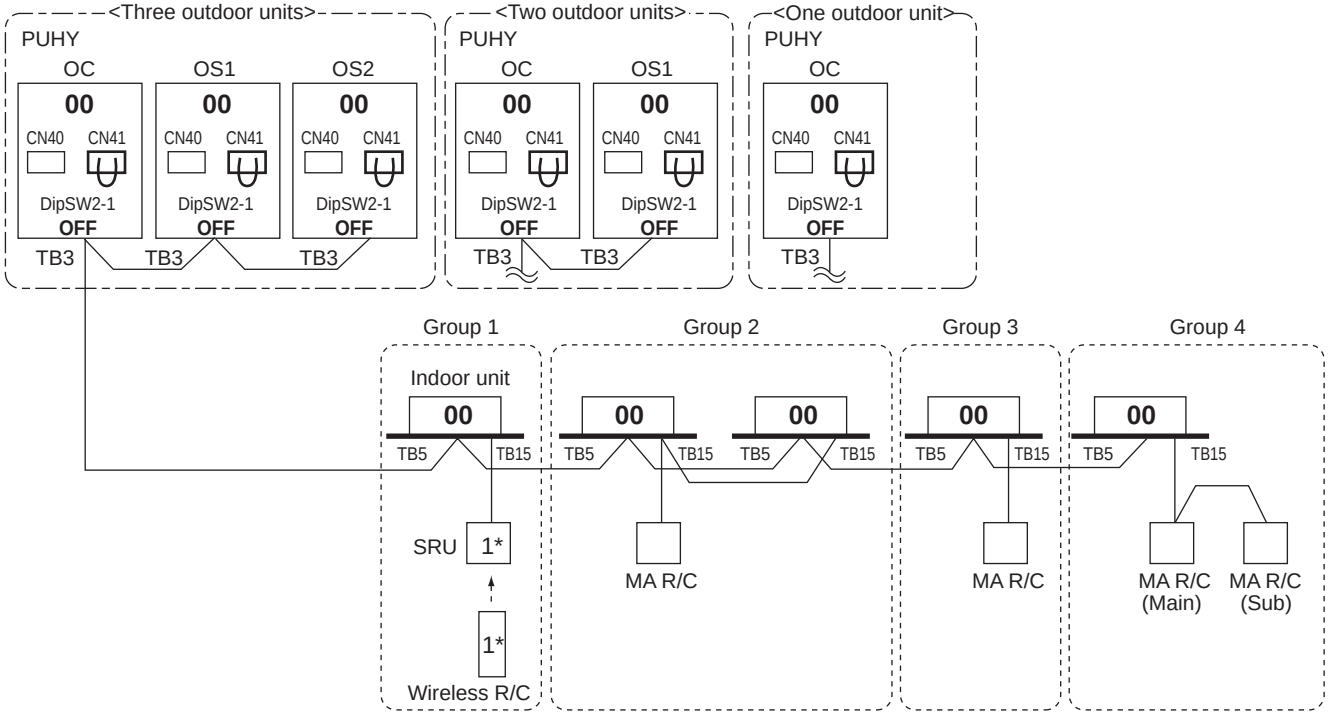

*1 For Wireless R/C and Signal receiver unit (SRU), channel 1, 2 and 3 are selectable and should be set to same channel.

NOTE:

1. Outdoor units OC, OS1 and OS2 in one refrigerant circuit system are automatically detected.
   OC, OS1 and OS2 are ranked in descending order of capacity. If units are the same capacity, they are ranked in ascending order of their address.
2. No address setting is needed.
3. For a system having more than 32 indoor unit (P15-P140), confirm the need of Booster at **2-3 "System configuration restrictions".**

2-4-3. System examples

2-4-3-2. MA remote controller, Single-refrigerant-system, System Controller

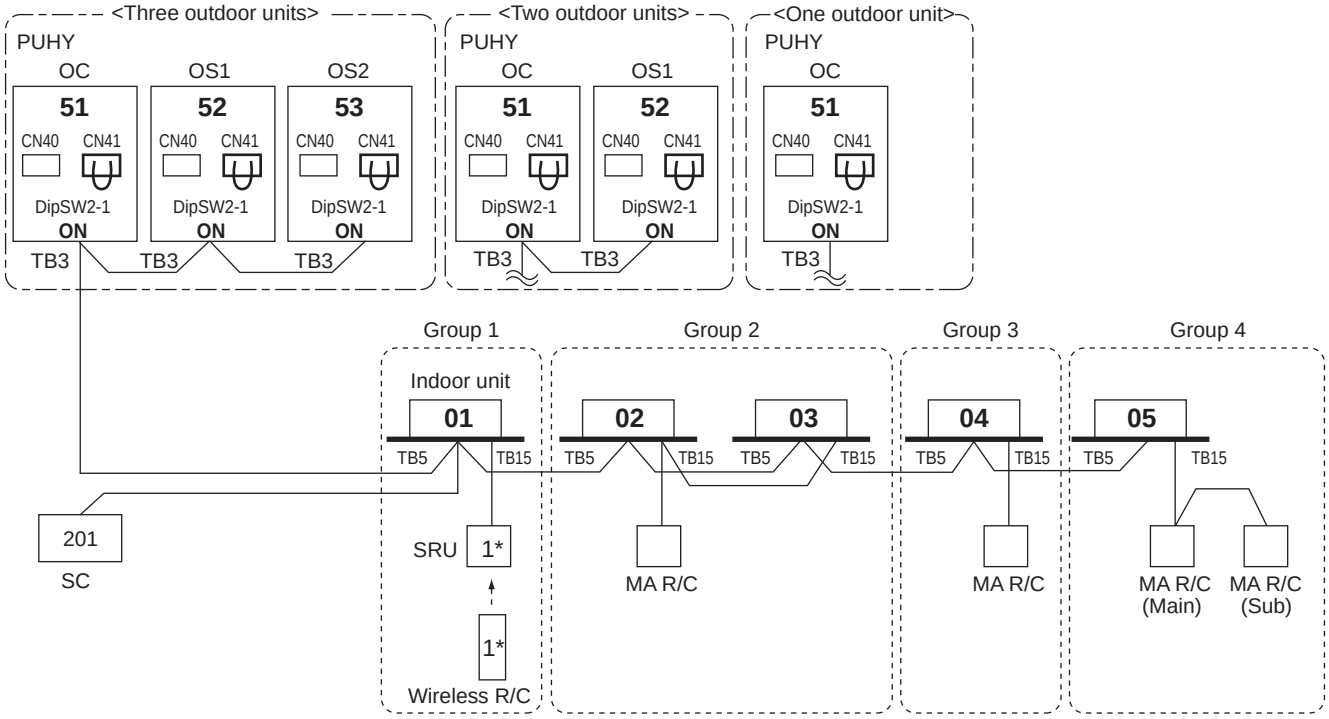

*1 For Wireless R/C and Signal receiver unit (SRU), channel 1, 2 and 3 are selectable and should be set to same channel.

*SC can be connected to TB3 side or TB7 side;
Should SC connected to TB7 side, change Jumper from CN41 to CN40 at the Outdoor unit module so as to supply power to the SC.

NOTE:

1. Outdoor units OC, OS1 and OS2 in one refrigerant circuit system are automatically detected.
   OC, OS1 and OS2 are ranked in descending order of capacity. If units are the same capacity, they are ranked in ascending order of their address.
2. Address should be set to Indoor units and centralized controller.
3. For a system having more than 32 indoor unit (P15-P140), confirm the need of Booster at **2-3 "System configuration restrictions".**

System Y

2-4-3. System examples

2-4-3-3. MA remote controller, Multi-refrigerant-system, System Controller at TB7/TB3 side, Booster for long M-NET wiring

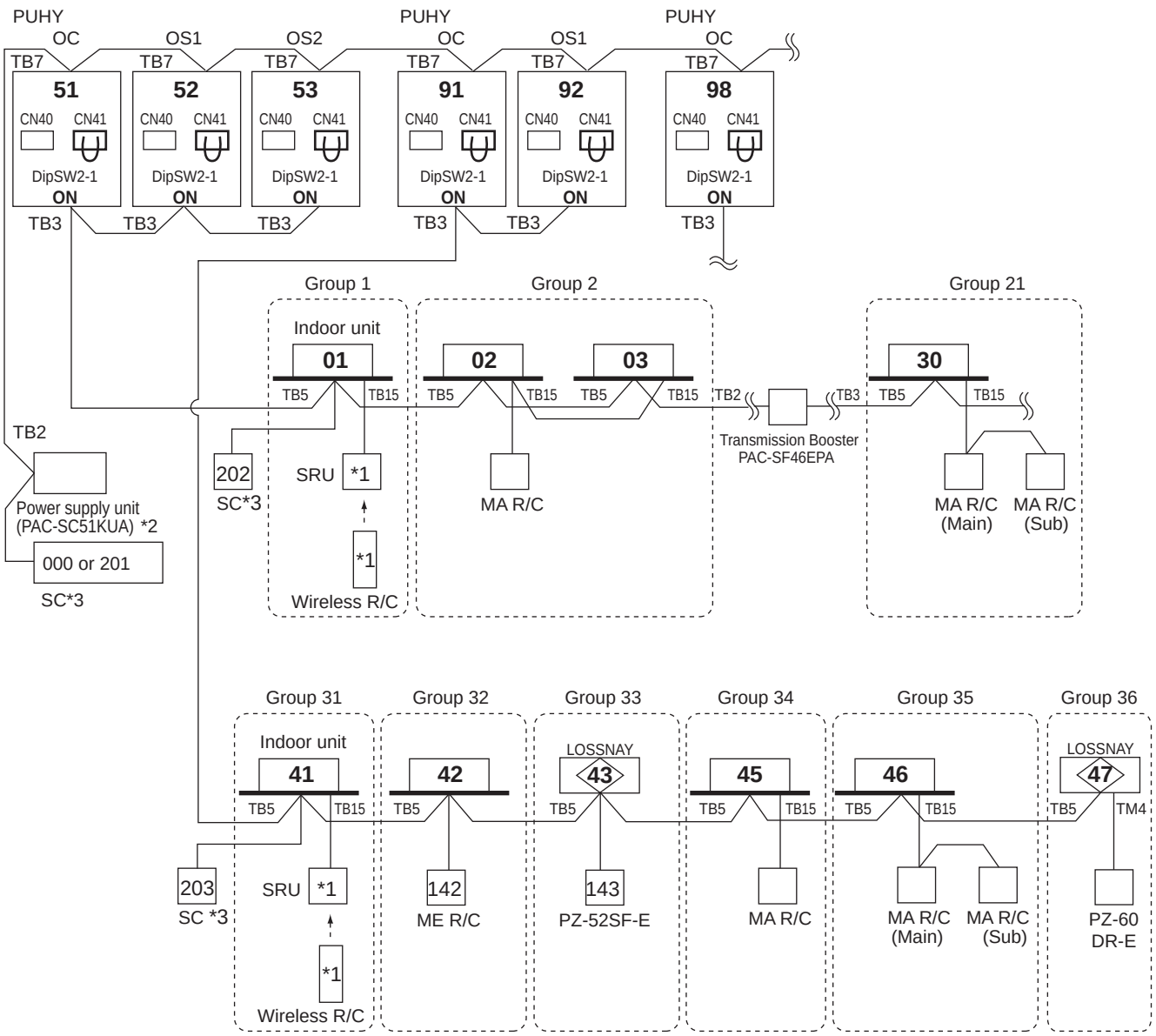

*1 For Wireless R/C and Signal receiver unit (SRU), channel 1, 2 and 3 are selectable and should be set to same channel.

*2 System controller should connect to TB7 at Outdoor and use power supply unit together in Multi-Refrigerant-System.
For AG-150A, 24V DC should be used with the PAC-SC51KUA.

*3 When multiple system controllers are connected in the system, set the controller with more functions than others as a "main" controller and others as "sub".
Make the setting to only one of the system controllers for "prohibition of operation from local remote controller".

NOTE:

1. Outdoor units OC, OS1 and OS2 in one refrigerant circuit system are automatically detected.
   OC, OS1 and OS2 are ranked in descending order of capacity. If units are the same capacity, they are ranked in ascending order of their address.
2. Address should be set to Indoor units, LOSSNAY and system controller.
3. M-NET power is supplied by the Outdoor unit at TB3, while Indoor unit and ME remote controller consume the M-NET power for transmission use. The power balance is needed to consider for long M-NET wiring. Details refer to **2-3 "System configuration restrictions".**

2-4-3. System examples

2-4-3-4. ME remote controller, Single-refrigerant-system, No system controller

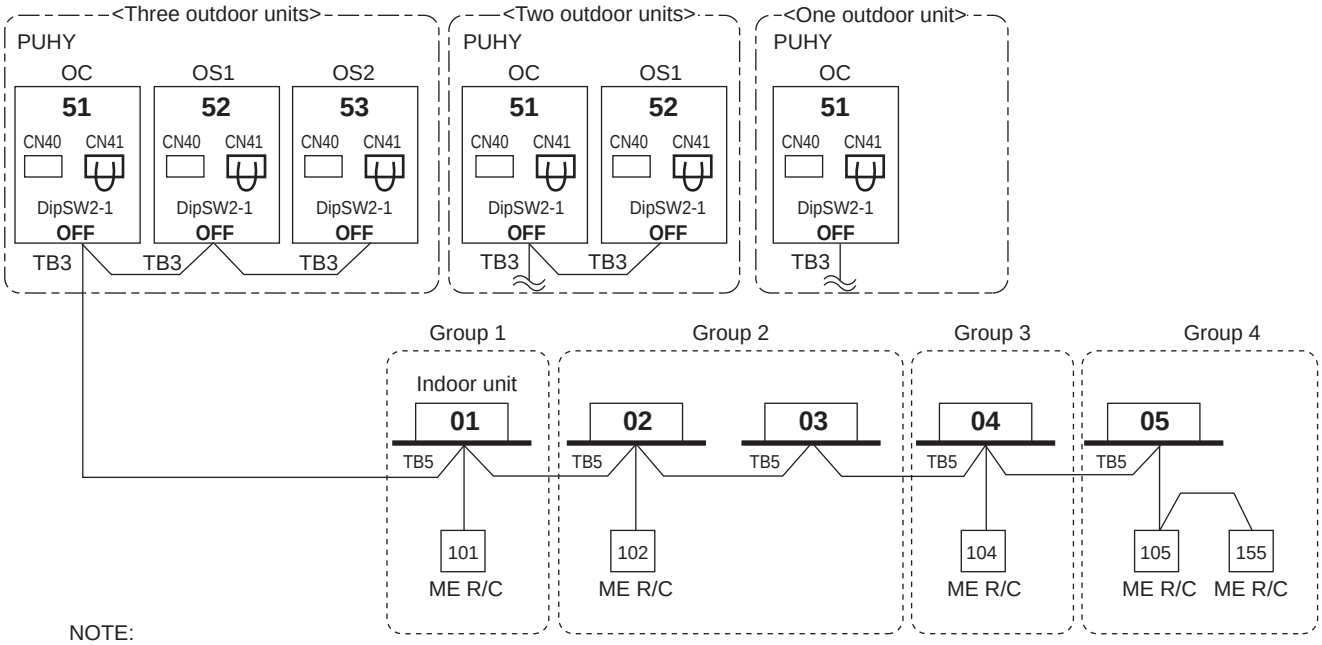

NOTE:

1. Outdoor units OC, OS1 and OS2 in one refrigerant circuit system are automatically detected.
   OC, OS1 and OS2 are ranked in descending order of capacity. If units are the same capacity, they are ranked in ascending order of their address.
2. Address should be set to Indoor units, system controller and ME remote controllers.
3. M-NET power is supplied by the Outdoor unit at TB3, while Indoor unit and ME RC consume the M-NET power for transmission use. The power balance is needed to consider for long M-NET wiring. Details refer to **2-3 "System configuration restrictions".**

2-4-3-5. ME remote controller, Single-refrigerant-system, System controller, LOSSNAY

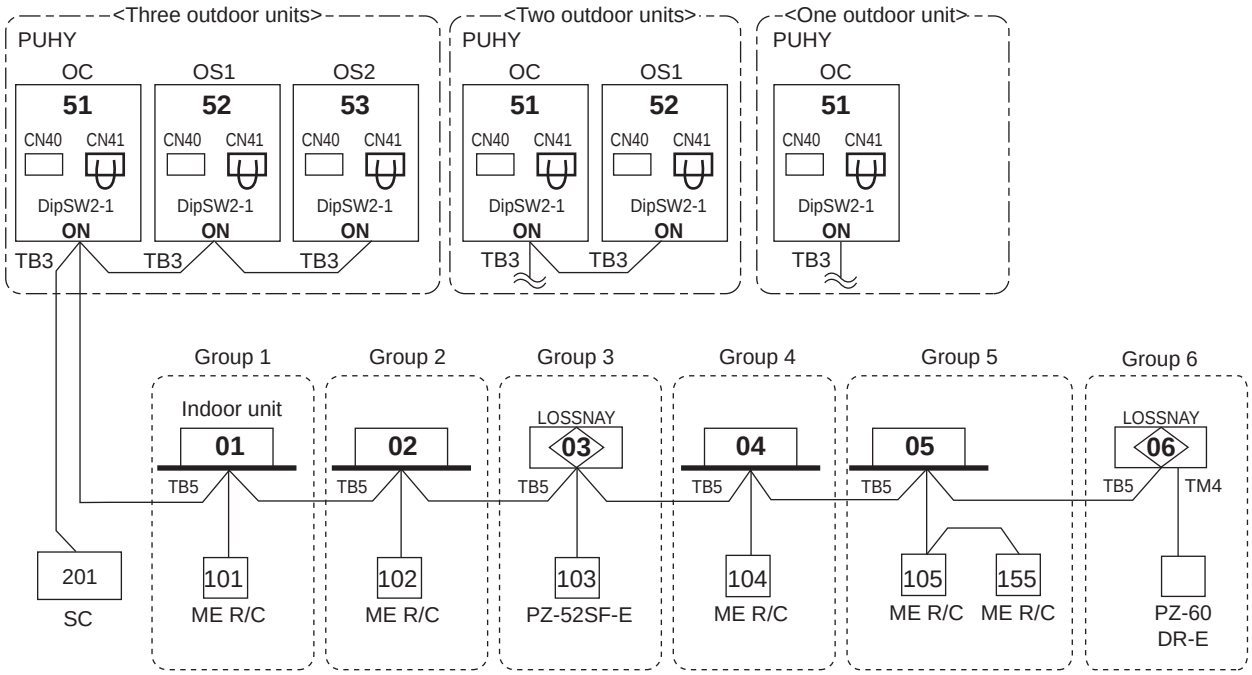

*SC can be connected to TB3 side or TB7 side;
Should SC connected to TB7 side, change Jumper from CN41 to CN40 at the Outdoor unit module so as to supply power to the SC.

NOTE:

1. Outdoor units OC, OS1 and OS2 in one refrigerant circuit system are automatically detected.
   OC, OS1 and OS2 are ranked in descending order of capacity. If units are the same capacity, they are ranked in ascending order of their address.
2. Address should be set to Indoor units, LOSSNAY centralized controller, ME remote controllers.
3. For a system having more than 32 indoor unit (P15-P140), confirm the need of Booster at **2-3 "System configuration restrictions".**

System Y

2-4-3. System examples

2-4-3-6. ME remote controller, Multi-refrigerant-system, System Controller at TB 7side, LOSSNAY, Booster for long M-NET wiring

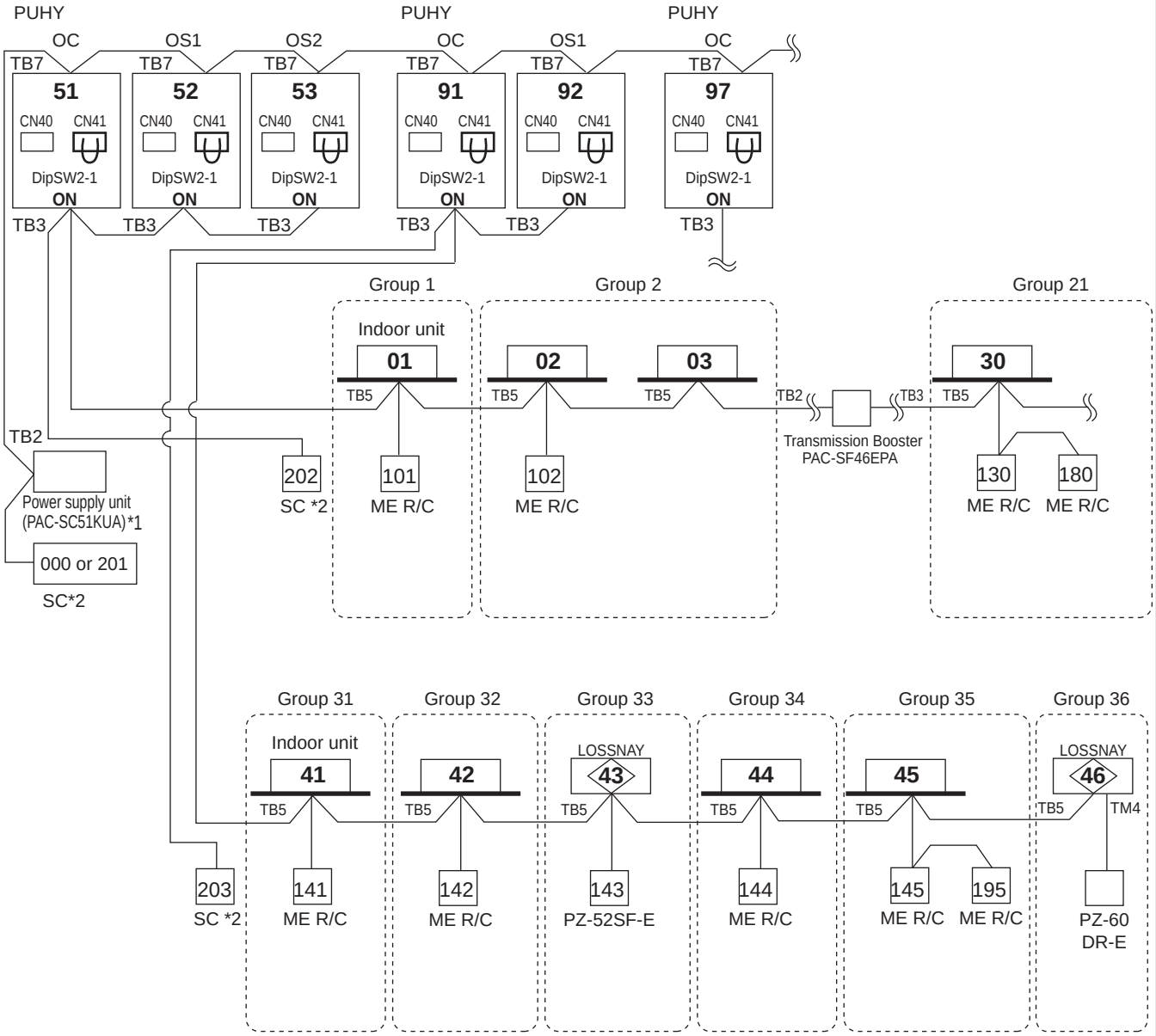

*1 System controller should connect to TB7 at Outdoor and use power supply unit together in Multi-Refrigerant-System.
For AG-150A, 24V DC should be used with the PAC-SC51KUA.

*2 When multiple system controllers are connected in the system, set the controller with more functions than others as a "main" controller and others as "sub".
Make the setting to only one of the system controllers for "prohibition of operation from local remote controller".

NOTE:

1. Outdoor units OC, OS1 and OS2 in one refrigerant circuit system are automatically detected.
   OC, OS1 and OS2 are ranked in descending order of capacity. If units are the same capacity, they are ranked in ascending order of their address.
2. M-NET power is supplied by the Outdoor unit at TB3, while Indoor unit and ME remote controller consume the M-NET power for transmission use. The power balance is needed to consider for long M-NET wiring. Details refer to **2-3 "System configuration restrictions".**

2-4-3-7. ME remote controller, Multi-refrigerant-system, No Power supply unit

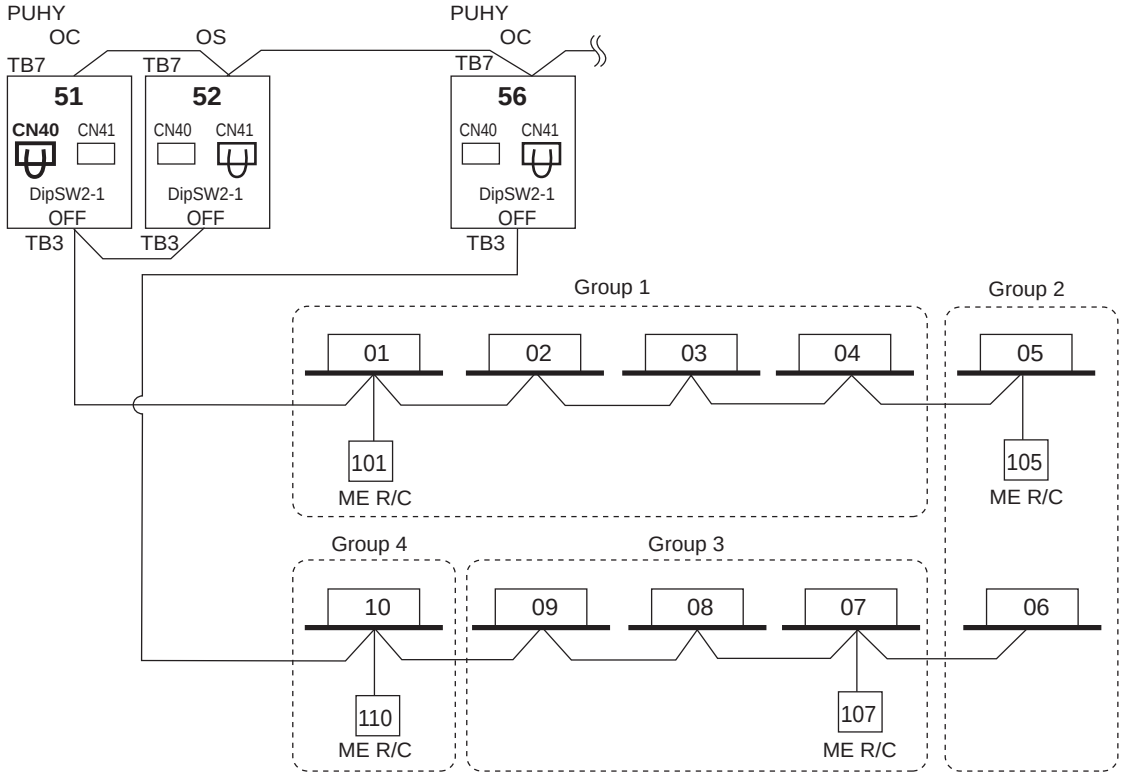

NOTE
- It is necessary to change the connecter to CN40 on the outdoor unit control board (only one outdoor unit) when the group is set between other refrigerant systems.
- It is necessary to set on the remote controller by manual when group sets on the different refrigerant system. Please refer to remote controller installation manual.

2-4-3-8. ME remote controller, Multi-refrigerant-system, System Controller at TB7 side, No Power sypply unit

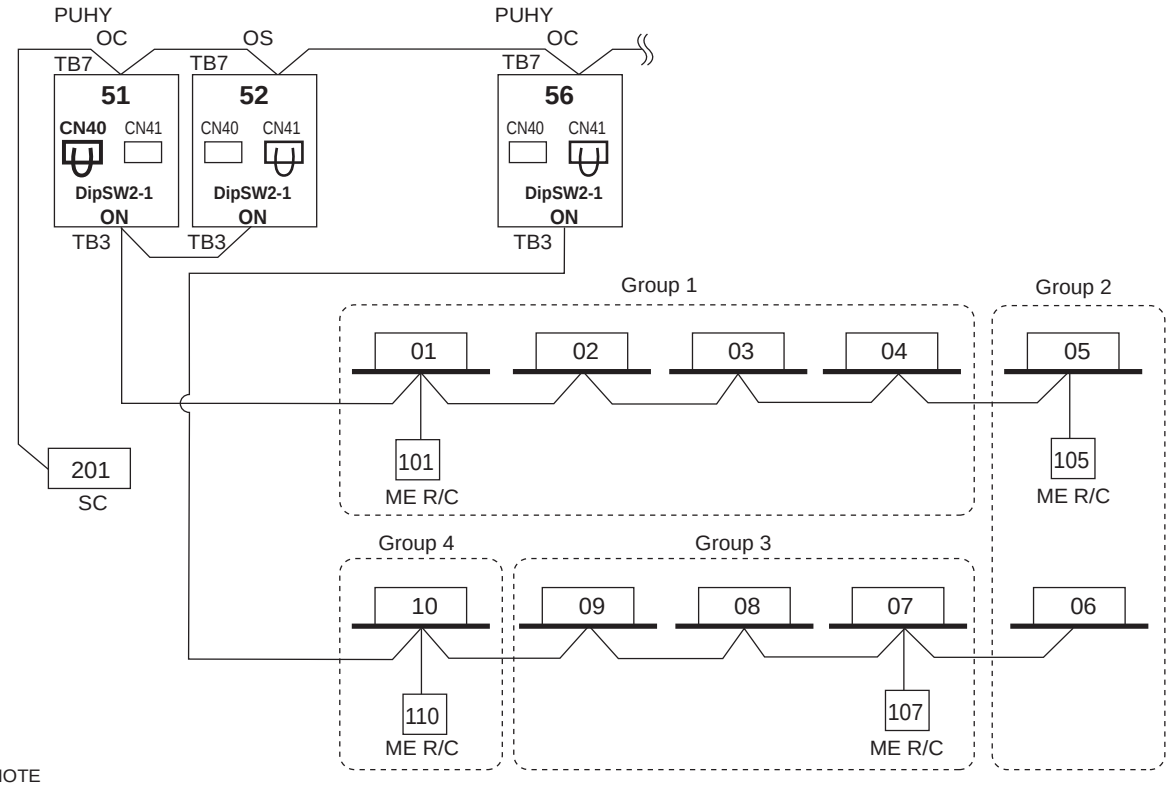

NOTE
- It is necessary to change the connecter to CN40 on the outdoor unit control board (only one outdoor unit) when the group is set between other refrigerant systems.
- It is necessary to set on the remote controller by manual when group sets on the different refrigerant system. Please refer to remote controller installation manual.

2-4-3-9. TG-2000A(*1)+AG-150A*2

AG-150A can control max. 50 indoor units;
TG-2000A can control max. 40 AG-150A;*3
TG-2000A can control max. 2000 indoor units.

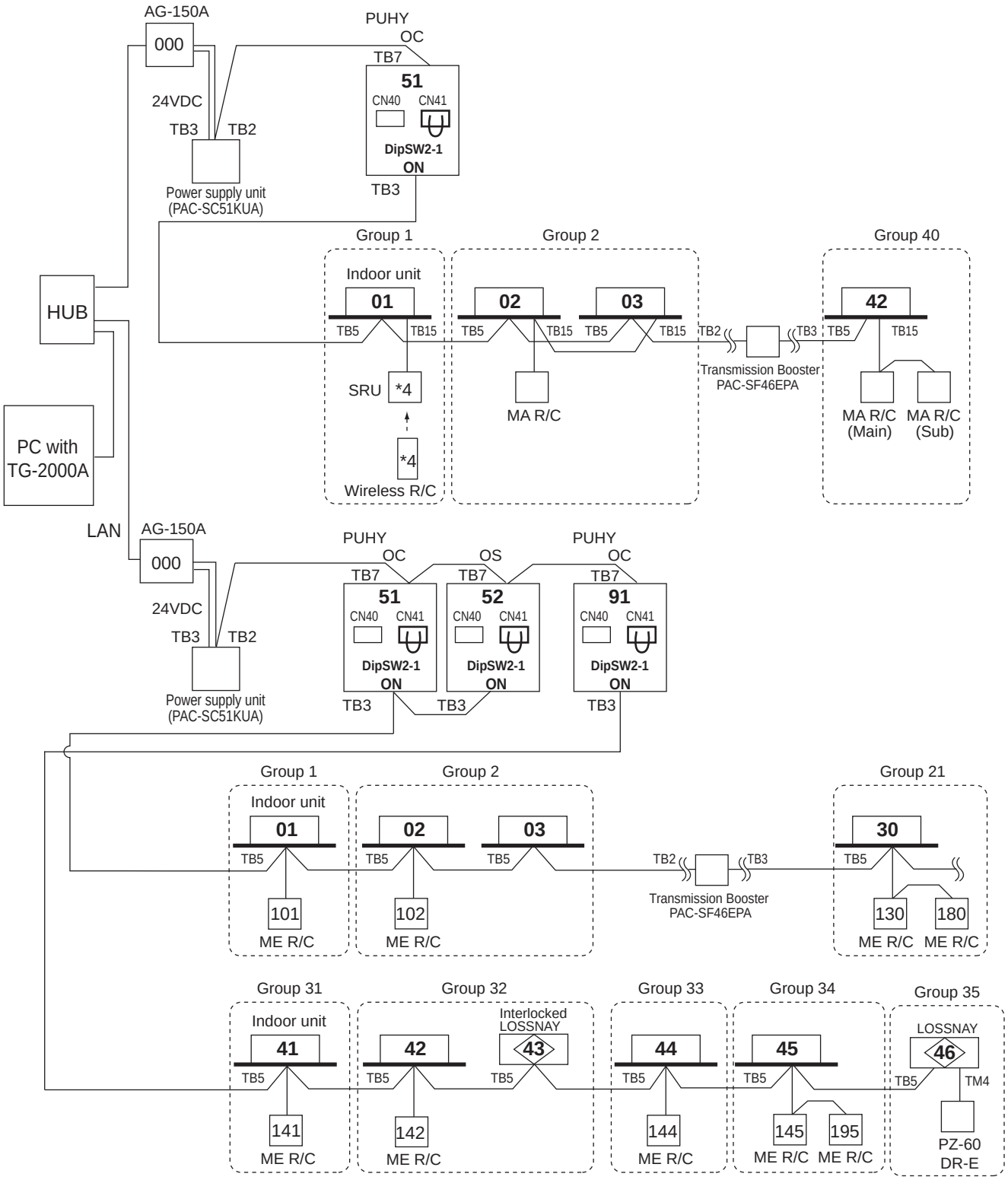

*1 TG-2000A (Ver.5.5 or later) supports AG-150A (Ver.1 series).
TG-2000A (Ver. 6.1 or later) supports AG-150A (Ver. 2.1 or later) connected with the expansion controller (EC).
*2 AG-150A (Ver.1 series) does not support the expansion controller (EC).
*3 When AG-150A connected with the expansion controller (EC) is connected, the number of EC will be the maximum controllable number.
TG-2000A can control up to 40 EC or AG-150A without EC connection.
*4 For Wireless R/C and Signal receiver unit (SRU), channel 1, 2 and 3 are selectable and should be set to same channel.

2-4-3. System examples

2-4-3-10. AG-150A + PAC-YG50ECA (Expansion controller)

AG-150A can control max. 150 indoor units/ via expansion controllers.

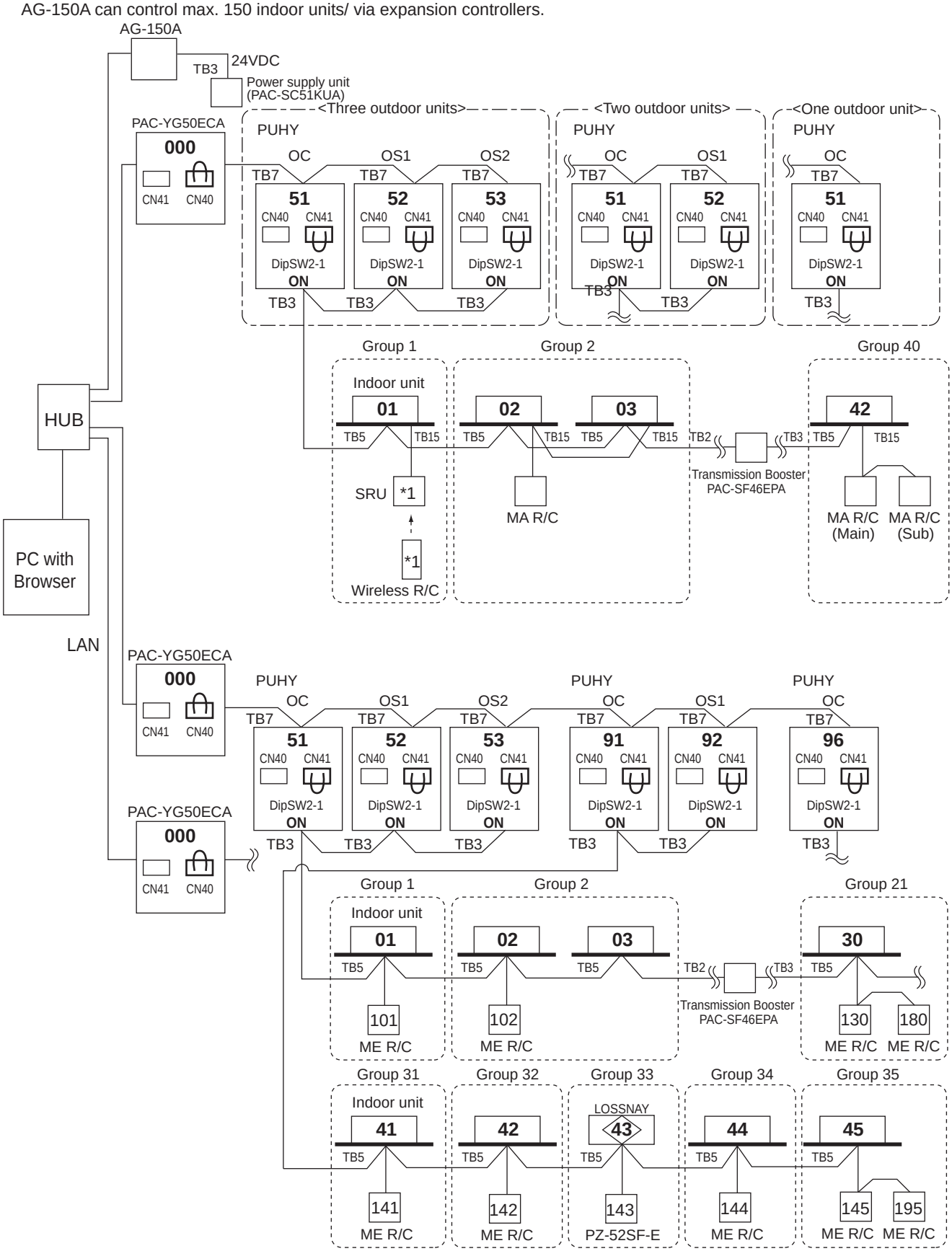

NOTE

- When connecting AG-150A to PAC-YG50ECA, TB2 for power supply unit does not need to be connected to AG-150A.

*1 For Wireless R/C and Signal receiver unit (SRU), channel 1, 2 and 3 are selectable and should be set to same channel.

System Y

2-4-3. System examples

2-4-3-11. LMAP

LMAP can transmission for max. 50 indoor units;
If system controller (SC) is used, DipSW1-2 at LMAP and DipSW2-1 at Outdoor unit should set to "ON".
Change Jumper from CN41 to CN40 to activate power supply to LMAP itself for those LMAP connected without system controller (SC).

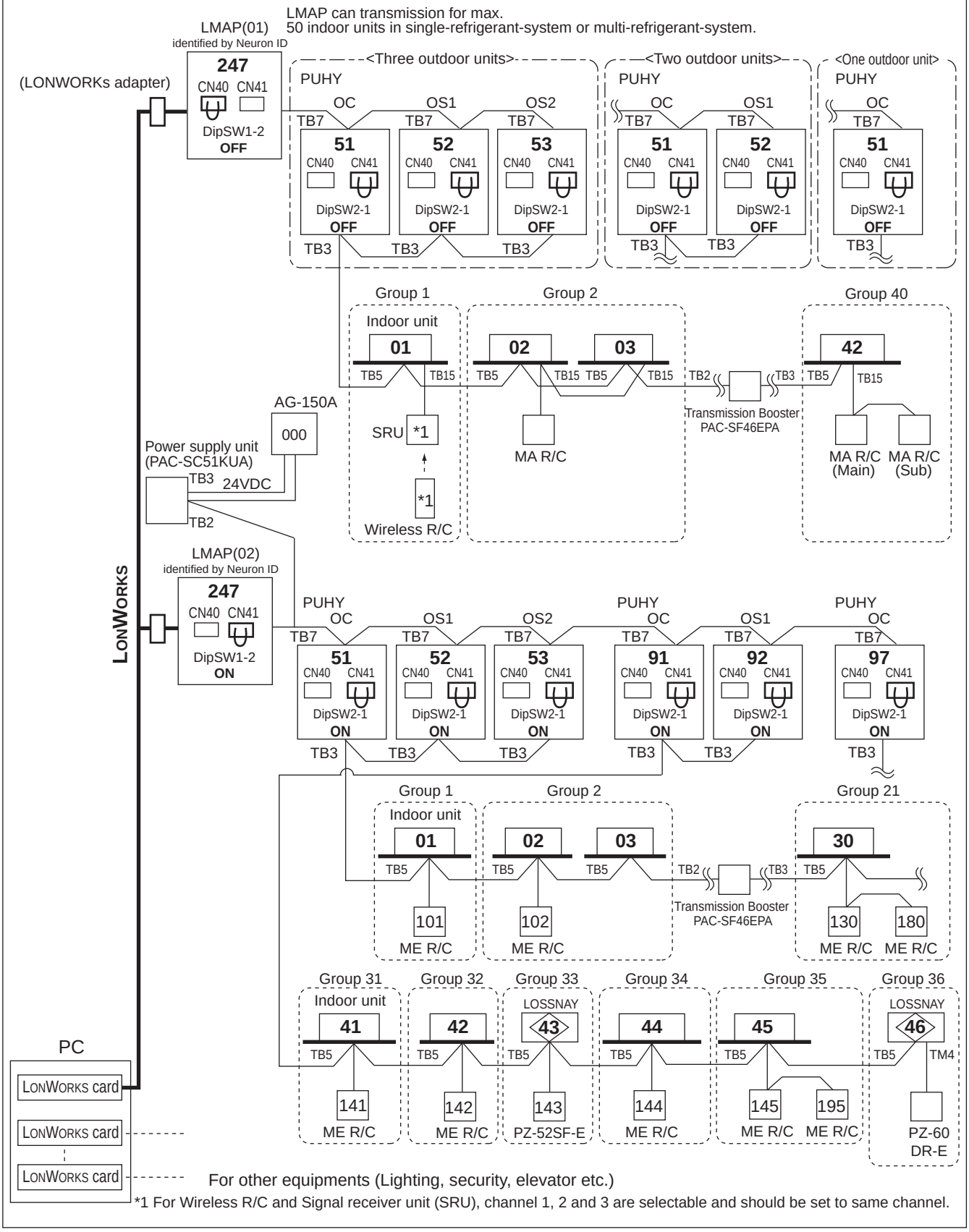

*1 For Wireless R/C and Signal receiver unit (SRU), channel 1, 2 and 3 are selectable and should be set to same channel.

2-4-3. System examples

2-4-3-12. BM ADAPTER

BM ADAPTER can transmission for max. 50 indoor units;
Change Jumper from CN41 to CN40 to activate power supply to BM ADAPTER itself for those BM ADAPTER connected without the power supply unit.

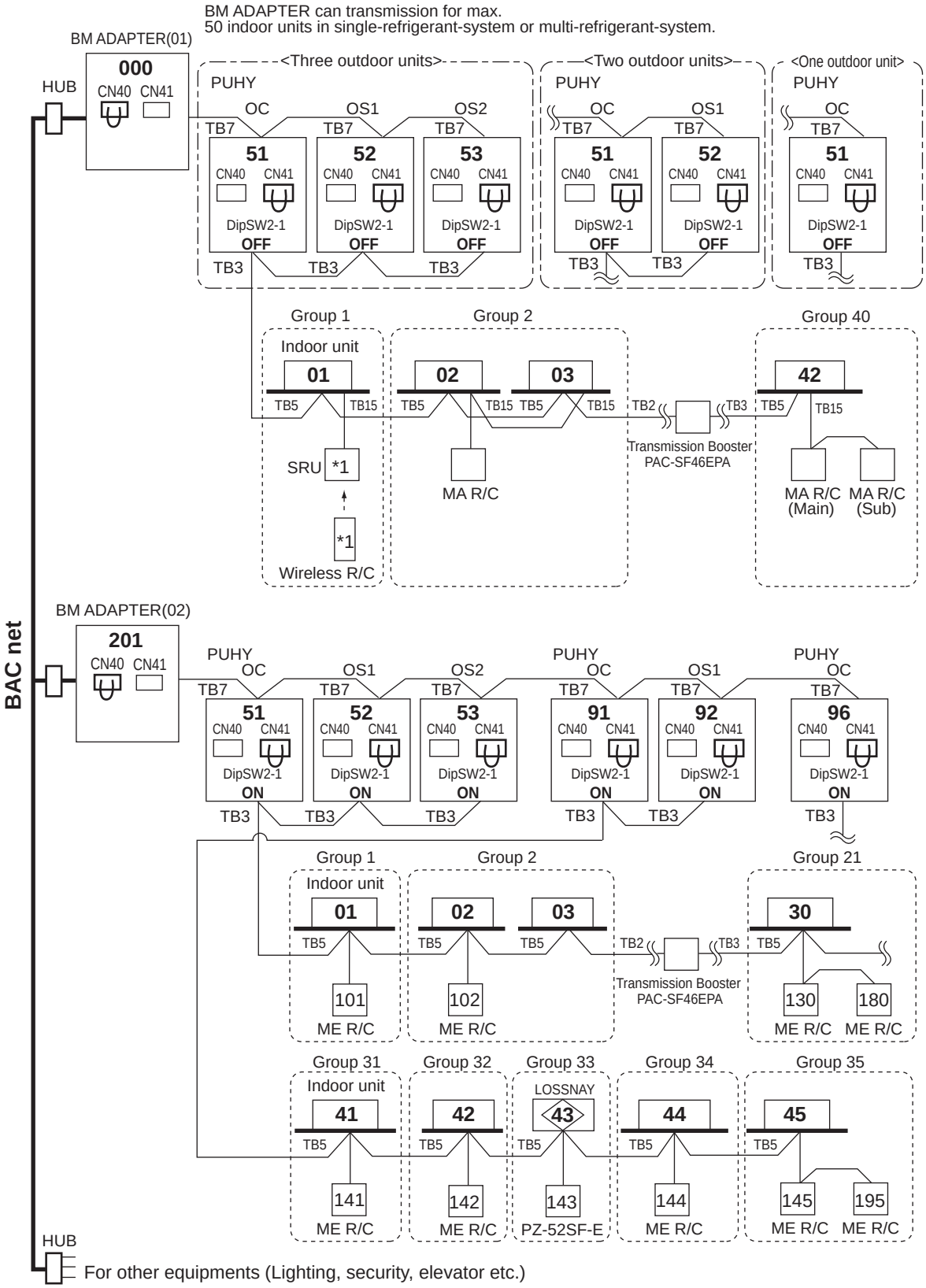

*1 For Wireless R/C and Signal receiver unit (SRU), channel 1, 2 and 3 are selectable and should be set to same channel.

System Y

2-4-3. System examples

2-4-3-13. BM ADAPTER+PAC-YG50ECA (Expansion controller)
BM ADAPTER(*1) can transmission for max. 150 indoor units/via expansion controllers (PAC-YG50ECA).

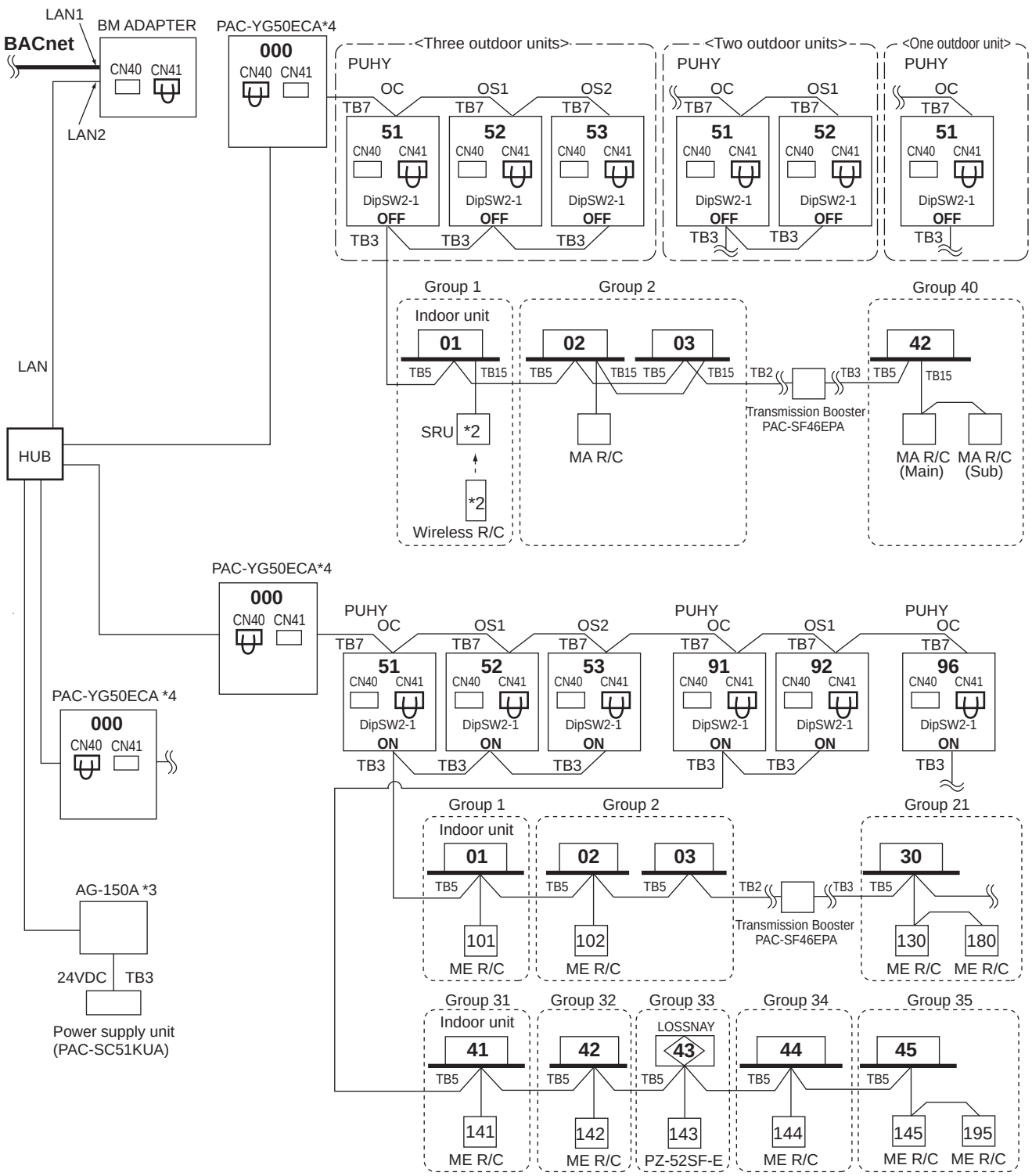

NOTE
•It is not necessary to connect the M-NET transmission line to the TB3 on BM ADAPTER. Leave the power jumper of BM ADAPTER connected to CN41.

*1 BM ADAPTER (Ver.2.00 or later) supports the expansion controller.
*2 For Wireless R/C and Signal receiver unit (SRU), channel 1, 2 and 3 are selectable and should be set to same channel.
*3 AG-150A (Ver.2.30 or later) supports the BM ADAPTER.
*4 PAC-YG50ECA (Ver.1.30 or later) supports the BM ADAPTER.

3. Piping Design

3-1. R410A Piping material

Refrigerant pipe for CITY MULTI shall be made of phosphorus deoxidized copper, and has two types.
A. Type-O : Soft copper pipe (annealed copper pipe), can be easily bent with human's hand.
B. Type-1/2H pipe : Hard copper pipe (Straight pipe), being stronger than Type-O pipe of the same radical thickness.

The maximum operation pressure of R410A air conditioner is 4.30 MPa [623psi]. The refrigerant piping should ensure the safety under the maximum operation pressure. MITSUBISHI ELECTRIC recommends pipe size as Table 3-1, or You shall follow the local industrial standard. Pipes of radical thickness 0.7mm or less shall not be used.

Table 3-1. Copper pipe size and radial thickness for R410A CITY MULTI.

Size (mm)	Size (inch)	Radial thickness (mm)	Radial thickness (mil)	Pipe type
ø6.35	ø1/4"	0.8	[32]	Type-O
ø9.52	ø3/8"	0.8	[32]	Type-O
ø12.7	ø1/2"	0.8	[32]	Type-O
ø15.88	ø5/8"	1.0	[40]	Type-O
ø19.05	ø3/4"	1.2	[48]	Type-O
ø19.05	ø3/4"	1.0	[40]	Type-1/2H or H
ø22.2	ø7/8"	1.0	[40]	Type-1/2H or H
ø25.4	ø1"	1.0	[40]	Type-1/2H or H
ø28.58	ø1-1/8"	1.0	[40]	Type-1/2H or H
ø31.75	ø1-1/4"	1.1	[44]	Type-1/2H or H
ø34.93	ø1-3/8"	1.2	[48]	Type-1/2H or H
ø41.28	ø1-5/8"	1.4	[56]	Type-1/2H or H

* For pipe sized ø19.05 (3/4") for R410A air conditioner, choice of pipe type is up to you.
* The figures in the radial thickness column are based on the Japanese standards and provided only as a reference. Use pipes that meet the local standards.

Flare

Due to the relative higher operation pressure of R410A compared to R22, the flare connection should follow dimensions mentioned below so as to achieve enough the air-tightness.

Flare pipe	Pipe size	A (For R410A) (mm[in.])
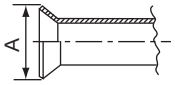	ø6.35 [1/4"]	9.1
	ø9.52 [3/8"]	13.2
	ø12.70 [1/2"]	16.6
	ø15.88 [5/8"]	19.7
	ø19.05 [3/4"]	24.0

Flare nut	Pipe size	B (For R410A) (mm[in.])
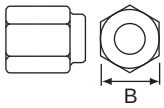	ø6.35 [1/4"]	17.0
	ø9.52 [3/8"]	22.0
	ø12.70 [1/2"]	26.0
	ø15.88 [5/8"]	29.0
	ø19.05 [3/4"]	36.0

System Y

3-2. Piping Design

3-2-1. PUHY-P200-450YHM-A, PUHY-EP200-300YHM-A Piping

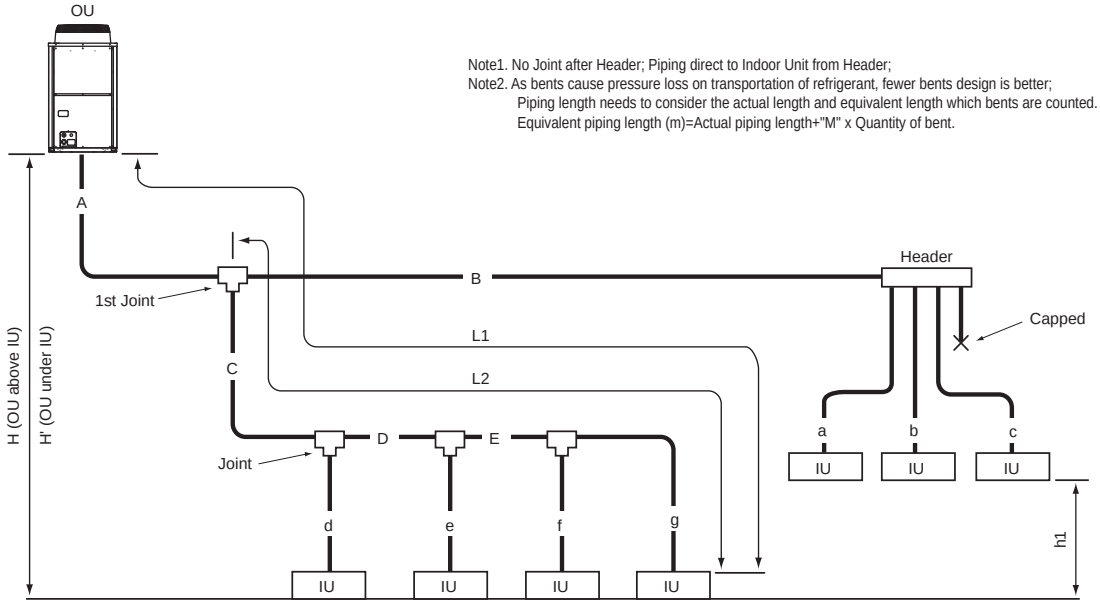

Fig. 3-2-1A Piping scheme

IU : Indoor unit , OU : Outdoor unit

Table3-2-1-1. Piping length (m [ft.])

Item	Piping in the figure	Max. length	Max. equivalent length
Total piping length	A+B+C+D+E+a+b+c+d+e+f+g	1000 [3280']	-
Farthest IU from OU (L1)	A+C+D+E+g / A+B+c	165 [541']	190 [623']
Farthest IU from first Joint (L2)	C+D+E+g / B+c	40 [131']	40 [131']
Height between OU and IU (OU above IU)	H	50 [164'] *1	-
Height between OU and IU (OU under IU)	H'	40 [131'] *2	-
Height between IU and IU	h1	15 [49']	-

OU: Outdoor Unit, IU: Indoor Unit

*1 90m is available depending on the model and installation conditions. For more detailed information, contact your local distributor.

*2 60m is available depending on the model and installation conditions. For more detailed information, contact your local distributor.

Table3-2-1-2. Bent equivalent length "M"

Outdoor Model	M (m/bent [ft./bent])
PUHY-(E)P200YHM-A	0.35 [1.15]
PUHY-(E)P250YHM-A	0.42 [1.38]
PUHY-(E)P300YHM-A	0.42 [1.38]
PUHY-P350YHM-A	0.47 [1.54]
PUHY-P400YHM-A	0.50 [1.64]
PUHY-P450YHM-A	0.50 [1.64]

Table3-2-1-3. Piping "A" size selection rule (mm [in.])

Outdoor and the first Joint	Pipe(Liquid)	Pipe(Gas)
PUHY-(E)P200YHM=CMY-Y102L-G2,Y102S-G2	ø9.52 [3/8"]	ø19.05 [3/4"]
PUHY-(E)P250YHM=CMY-Y102L-G2	ø9.52 [3/8"] *1	ø22.20 [7/8"]
PUHY-(E)P300YHM=CMY-Y102-G2	ø9.52 [3/8"] *2	ø22.20 [7/8"]
PUHY-P350YHM=CMY-Y102-G2	ø12.70 [1/2"]	ø28.58 [1-1/8"]
PUHY-P400YHM=CMY-Y202-G2	ø12.70 [1/2"]	ø28.58 [1-1/8"]
PUHY-P450YHM=CMY-Y202-G2	ø15.88 [5/8"]	ø28.58 [1-1/8"]

*1. A>=90m [295ft.], ø12.70mm [1/2in.] ; A<90m [295ft.], ø9.52mm [3/8in.]

*2. A>=40m [131ft.], ø12.70mm [1/2in.] ; A<40m [131ft.], ø9.52mm [3/8in.]

Table3-2-1-6. R410A Joint selection rule

Total down-stream Indoor capacity	Joint
~ P200	CMY-Y102S-G2
P201 ~ P400	CMY-Y102L-G2
P401 ~ P650	CMY-Y202-G2
P651 ~	CMY-Y302-G2

*PUHY-P450Y(S)HM's first Joint is always CMY-Y202-G2;

*Concerning detailed usage of Joint parts, refer to its Installation Manual.

Table3-2-1-4. R410A piping"B","C","D","E"size selection rule (mm [in.])

Total down-stream Indoor capacity	Pipe(Liquid)	Pipe(Gas)
~ P140	ø9.52 [3/8"]	ø15.88 [5/8"]
P141 ~ P200	ø9.52 [3/8"]	ø19.05 [3/4"]
P201 ~ P300	ø9.52 [3/8"]	ø22.20 [7/8"]
P301 ~ P400	ø12.70 [1/2"]	ø28.58 [1-1/8"]
P401 ~ P650	ø15.88 [5/8"]	ø28.58 [1-1/8"]
P651 ~ P800	ø19.05 [3/4"]	ø34.93 [1-3/8"]
P801 ~	ø19.05 [3/4"]	ø41.28 [1-5/8"]

Table3-2-1-5. Piping "a","b","c","d","e","f","g" size selection rule (mm [in.])

Indoor Unit size	Pipe(Liquid)	Pipe(Gas)
P20,P25,P32,P40,P50,GUF-50RD(H)	ø6.35 [1/4"]	ø12.70 [1/2"]
P63,P71,P80,P100,P125,P140,GUF-100RD(H)	ø9.52 [3/8"]	ø15.88 [5/8"]
P200	ø9.52 [3/8"]	ø19.05 [3/4"]
P250	ø9.52 [3/8"]	ø22.20 [7/8"]

Table3-2-1-7. R410A Header selection rule

	4-branch Header	8-branch Header	10-branch Header
	CMY-Y104-G	CMY-Y108-G	CMY-Y1010-G
Total down-stream Indoor capacity	<=P200	<=P400	<=P650

* CMY-Y104-G can directly connect PUHY-(E)P200YHM, but can NOT directly connect PUHY-(E)P250YHM or above;
* CMY-Y108-G can directly connect PUHY-(E)P200-450YHM, but can NOT directly connect PUHY-(E)P500YSHM or above;
* CMY-Y1010-G can directly connect PUHY-(E)P200-650Y(S)HM;
* CMY-Y104-G can NOT connect P200,P250 Indoor, but CMY-Y108, Y1010-G can do;
* Concerning detailed usage of Header parts, refer to its Installation Manual.

Note3. Indoor capacity is described as its model size;
For example, PEFY-P32VMM-E, its capacity is P32;

Note4. Total down-stream Indoor capacity is the summary of the model size of Indoors downstream.
For example, PEFY-P25VMM-E+PEFY-P32VMM-E: Total Indoor capacity=P25+P32=P57

Note5. Piping sized determined by the Total down-stream indoor capacity is NOT necessary to be bigger than the up-stream one.
i.e. A>=B; A>=C>=D

3-2-2. PUHY-P500-900YSHM-A, PUHY-EP400,500,600,650YSHM-A, PUHY-EP450,550YSHM-A1 Piping

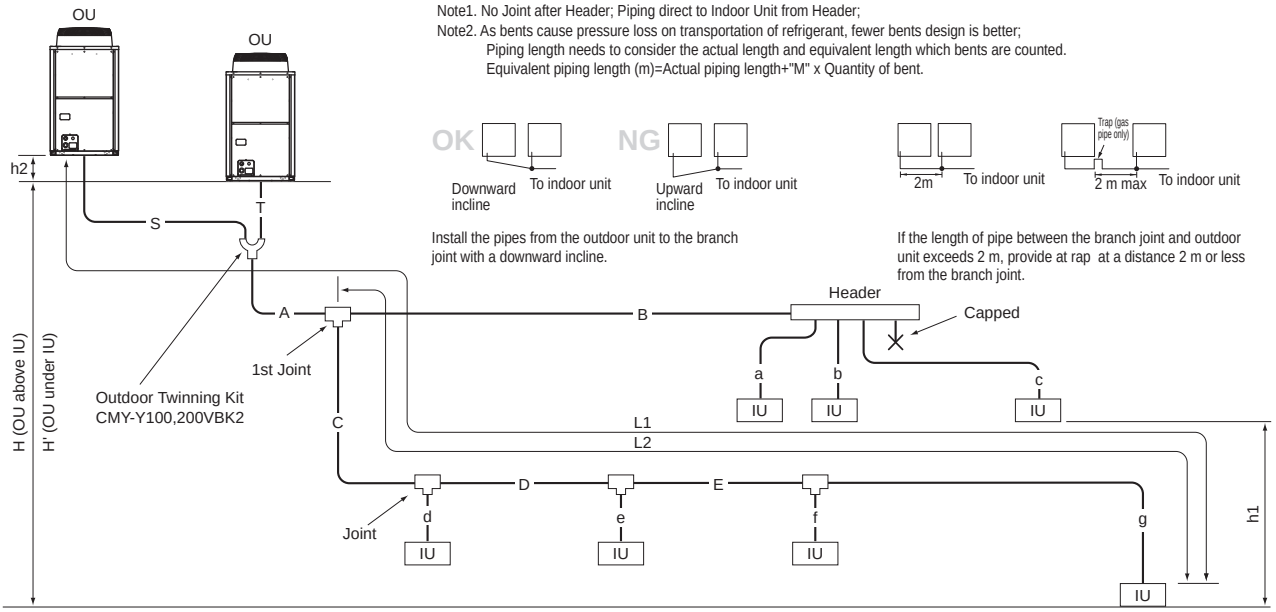

Fig. 3-2-1B Piping scheme

IU : Indoor unit , OU : Outdoor unit

Table3-2-2-1. Piping length (m [ft.])

Item	Piping in the figure	Max. length	Max. equivalent length
Total piping length	S+T+A+B+C+D+E+a+b+c+d+e+f+g	1000 [3280']	-
Distance between OU and OU	S+T	10[32']	-
Height between OU and OU	h2	0.1[0.3']	-
Farthest IU from OU (L1)	S(T)+A+C+D+E+g / S(T)+A+B+c	165 [541']	190 [623']
Farthest IU from the first Joint (L2)	C+D+E+g / B+c	40 [131']	40 [131']
Height between OU and IU (OU above IU)	H	50 [164'] *1	-
Height between OU and IU (OU above IU)	H'	40 [131'] *2	-
Height between IU and IU	h1	15 [49']	-

OU: Outdoor Unit, IU: Indoor Unit

*1 90m is available depending on the model and installation conditions. For more detailed information, contact your local distributor.

*2 60m is available depending on the model and installation conditions. For more detailed information, contact your local distributor.

Table3-2-2-2. Bent equivalent length "M"

Outdoor Model	M (m/bent [ft./bent])
PUHY-(E)P400YSHM-A	0.50 [1.64]
PUHY-(E)P450YSHM-A(1)	0.50 [1.64]
PUHY-(E)P500YSHM-A	0.50 [1.64]
PUHY-(E)P550YSHM-A(1)	0.50 [1.64]
PUHY-(E)P600YSHM-A	0.50 [1.64]
PUHY-(E)P650YSHM-A	0.50 [1.64]
PUHY-P700YSHM-A	0.70 [2.29]
PUHY-P750YSHM-A	0.70 [2.29]
PUHY-P800YSHM-A	0.70 [2.29]
PUHY-P850YSHM-A	0.80 [2.62]
PUHY-P900YSHM-A	0.80 [2.62]

Table3-2-2-3. Piping "A" size selection rule (mm [in.])

Outdoor and the first Joint	Pipe(Liquid)	Pipe(Gas)
CMY-Y100VBK2=CMY-Y202-G2	ø12.70[1/2"]	ø28.58[1-1/8"]*1
	ø15.88[5/8"]	ø28.58[1-1/8"]*2
CMY-Y200VBK2=CMY-Y302-G2	ø19.05[3/4"]	ø34.93[1-3/8"]*3
	ø19.05[3/4"]	ø41.28[1-5/8"]*4

CMY-Y100VBK2; *1 PUHY-EP400YSHM, *2 PUHY-P500-650YSHM, EP450-650YSHM
CMY-Y200VBK2; *3 PUHY-P700-800YSHM, *4 PUHY-P850-900YSHM
For Piping size "S","T", please refer to specification of the Twining kit CMY-Y100,200VBK2 at the Outdoor unit's external drawing.

Table3-2-2-6. R410A Joint selection rule

Total down-stream Indoor capacity	Joint
~ P200	CMY-Y102S-G2
P201 ~ P400	CMY-Y102L-G2
P401 ~ P650	CMY-Y202-G2
P651 ~	CMY-Y302-G2

*PUHY-P500-650YSHM's first Joint is always CMY-Y202-G2;
*PUHY-P700-800YSHM's first Joint is always CMY-Y302-G2;
*PUHY-P850-900YSHM's first Joint is always CMY-Y302-G2;
*Concerning detailed usage of Joint parts, refer to its Installation Manual.
*The total capacity of the units in the downstream of the branch joint on at least one of the piping lines that are connected to the branch joint should be 650 or below.
If the total capacity of the units in the downstream of the branch joints on both lines is 650 or above use two branch joints (CMY-Y302-G2).

Table3-2-2-4. Piping"B","C","D","E" size selection rule (mm [in.])

Total down-stream Indoor capacity	Pipe(Liquid)	Pipe(Gas)
~ P140	ø9.52 [3/8"]	ø15.88 [5/8"]
P141 ~ P200	ø9.52 [3/8"]	ø19.05 [3/4"]
P201 ~ P300	ø9.52 [3/8"]	ø22.20 [7/8"]
P301 ~ P400	ø12.70 [1/2"]	ø28.58 [1-1/8"]
P401 ~ P650	ø15.88 [5/8"]	ø28.58 [1-1/8"]
P651 ~ P800	ø19.05 [3/4"]	ø34.93 [1-3/8"]
P801 ~	ø19.05 [3/4"]	ø41.28 [1-5/8"]

Table3-2-2-7. R410A Header selection rule

	4-branch Header	8-branch Header	10-branch Header
	CMY-Y104-G	CMY-Y108-G	CMY-Y1010-G
Total down-stream Indoor capacity	<=P200	<=P400	<=P650

* CMY-Y104-G can directly connect PUHY-(E)P200YHM, but can NOT directly connect PUHY-(E)P250YHM or above;
* CMY-Y108-G can directly connect PUHY-(E)P200-450YHM, but can NOT directly connect PUHY-(E)P500YSHM or above;
* CMY-Y1010-G can directly connect PUHY-(E)P200-650Y(S)HM;
* CMY-Y104-G can NOT connect P200,P250 Indoor, but CMY-Y108, Y1010-G can do;
* Concerning detailed usage of Header parts, refer to its Installation Manual.

Note3. Indoor capacity is described as its model size;
For example, PEFY-P32VMM-E, its capacity is P32;
Note4. Total down-stream Indoor capacity is the summary of the model size of Indoors downstream.
For example, PEFY-P25VMM-E+PEFY-P32VMM-E: Total Indoor capacity=P25+P32=P57
Note5. Piping sized determined by the Total down-stream indoor capacity is NOT necessary to be bigger than the up-stream one.
i.e. A>=B; A>=C>=D

Table3-2-2-5. Piping"a","b","c","d","e","f","g" size selection rule (mm [in.])

Indoor Unit size	Pipe(Liquid)	Pipe(Gas)
P20,P25,P32,P40,P50,GUF-50RD(H)	ø6.35 [1/4"]	ø12.70 [1/2"]
P63,P71,P80,P100,P125,P140,GUF-100RD(H)	ø9.52 [3/8"]	ø15.88 [5/8"]
P200	ø9.52 [3/8"]	ø19.05 [3/4"]
P250	ø9.52 [3/8"]	ø22.20 [7/8"]

System Y

3-2-3. PUHY-P950-1250YSHM-A, PUHY-EP700,800,900YSHM-A, PUHY-EP750,850YSHM-A1 Piping

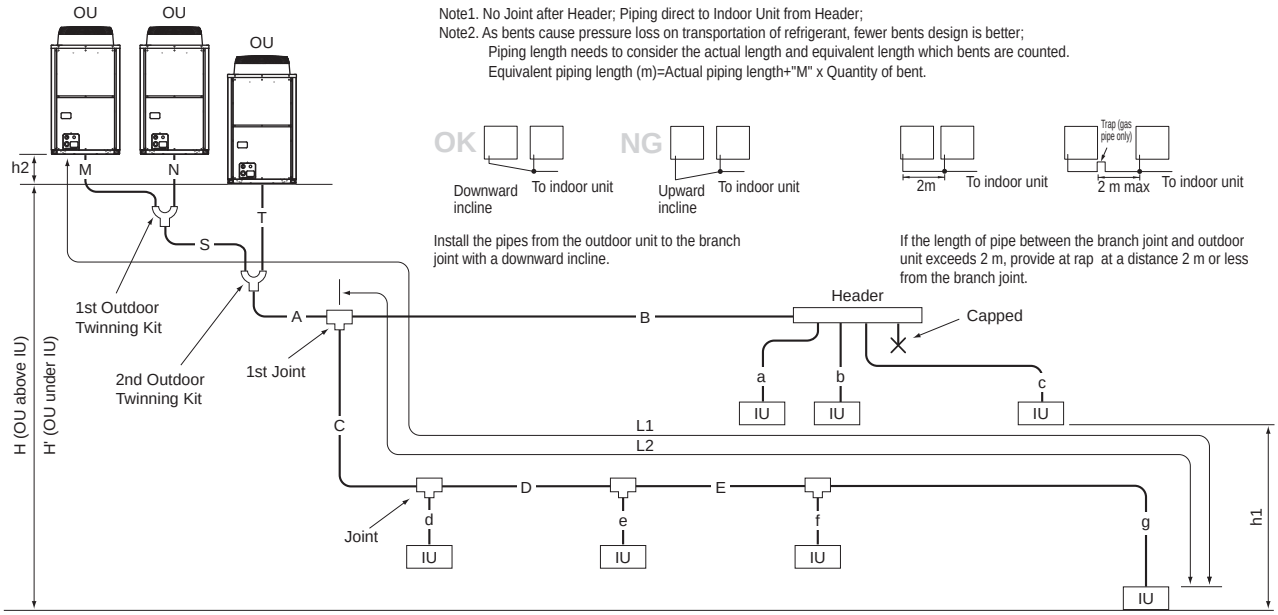

Note1. No Joint after Header; Piping direct to Indoor Unit from Header;
Note2. As bents cause pressure loss on transportation of refrigerant, fewer bents design is better;
Piping length needs to consider the actual length and equivalent length which bents are counted.
Equivalent piping length (m)=Actual piping length+"M" x Quantity of bent.

Install the pipes from the outdoor unit to the branch joint with a downward incline.

If the length of pipe between the branch joint and outdoor unit exceeds 2 m, provide at rap at a distance 2 m or less from the branch joint.

Fig. 3-2-1C Piping scheme

IU : Indoor unit , OU : Outdoor unit

Table3-2-3-1. Piping length (m [ft.])

Item	Piping in the figure	Max. length	Max. equivalent length
Total piping length	S+T+M+N+A+B+C+D+E+a+b+c+d+e+f+g	1000[3280']	-
Distance between OU and OU	M+N+S+T	10[32']	-
Height between OU and OU	h2	0.1[0.3']	-
Farthest IU from OU (L1)	M(N)+S+A+C+D+E+g / M(N)+S+A+B+c	165[541']	190[623']
Farthest IU from the first Joint (L2)	C+D+E+g / B+c	40[131']	40[131']
Height between OU and IU (OU above IU)	H	50[164'] *1	-
Height between OU and IU (OU above IU)	H'	40[131'] *2	-
Height between IU and IU	h1	15[49']	-

OU: Outdoor Unit, IU: Indoor Unit
*1 90m is available depending on the model and installation conditions. For more detailed information, contact your local distributor.
*2 60m is available depending on the model and installation conditions. For more detailed information, contact your local distributor.

Table3-2-3-2. Bent equivalent length "M"

Outdoor Model	M (m/bent [ft./bent])
PUHY-(E)P700YSHM-A	0.70 [2.29]
PUHY-(E)P750YSHM-A(1)	0.70 [2.29]
PUHY-(E)P800YSHM-A	0.70 [2.29]
PUHY-(E)P850YSHM-A(1)	0.80 [2.62]
PUHY-(E)P900YSHM-A	0.80 [2.62]
PUHY-P950YSHM-A	0.80 [2.62]
PUHY-P1000YSHM-A	0.80 [2.62]
PUHY-P1050YSHM-A	0.80 [2.62]
PUHY-P1100YSHM-A	0.80 [2.62]
PUHY-P1150YSHM-A	0.80 [2.62]
PUHY-P1200YSHM-A	0.80 [2.62]
PUHY-P1250YSHM-A	0.80 [2.62]

Table3-2-3-3. Piping "A" size selection rule (mm [in.])

Outdoor and the first Joint	Pipe(Liquid)	Pipe(Gas)
CMY-Y300VBK2=CMY-Y302-G2	ø19.05[3/4"]	ø34.93[1-3/8"]*1
	ø19.05[3/4"]	ø41.28[1-5/8"]*2

For Piping size"M","N","S","T", please refer to specification of the Twining kit CMY-Y300VBK2 at the Outdoor unit's external drawing.

*1 PUHY-EP700-800YSHM
*2 PUHY-P950-1250YSHM, PUHY-EP850, 900YSHM

Table3-2-3-6. R410A Joint selection rule

Total down-stream Indoor capacity	Joint
~ P200	CMY-Y102S-G2
P201 ~ P400	CMY-Y102L-G2
P401 ~ P650	CMY-Y202-G2
P651 ~	CMY-Y302-G2

*PUHY-P950-1250YSHM's first Joint is always CMY-Y302-G2;
*The total capacity of the units in the downstream of the branch joint on at least one of the piping lines that are connected to the branch joint should be 650 or below.
If the total capacity of the units in the downstream of the branch joints on both lines is 650 or above use two branch joints (CMY-Y302-G2).
*Concerning detailed usage of Joint parts, refer to its Installation Manual.

Table3-2-3-4. Piping"B","C","D","E" size selection rule (mm [in.])

Total down-stream Indoor capacity	Pipe(Liquid)	Pipe(Gas)
~ P140	ø9.52 [3/8"]	ø15.88 [5/8"]
P141 ~ P200	ø9.52 [3/8"]	ø19.05 [3/4"]
P201 ~ P300	ø9.52 [3/8"]	ø22.20 [7/8"]
P301 ~ P400	ø12.70 [1/2"]	ø28.58 [1-1/8"]
P401 ~ P650	ø15.88 [5/8"]	ø28.58 [1-1/8"]
P651 ~ P800	ø19.05 [3/4"]	ø34.93 [1-3/8"]
P801 ~	ø19.05 [3/4"]	ø41.28 [1-5/8"]

Table3-2-3-5. Piping"a","b","c","d","e","f","g" size selection rule (mm [in.])

Indoor Unit size	Pipe(Liquid)	Pipe(Gas)
P20,P25,P32,P40,P50,GUF-50RD(H)	ø6.35 [1/4"]	ø12.70 [1/2"]
P63,P71,P80,P100,P125,P140,GUF-100RD(H)	ø9.52 [3/8"]	ø15.88 [5/8"]
P200	ø9.52 [3/8"]	ø19.05 [3/4"]
P250	ø9.52 [3/8"]	ø22.20 [7/8"]

Table3-2-3-7. R410A Header selection rule

	4-branch Header	8-branch Header	10-branch Header
	CMY-Y104-G	CMY-Y108-G	CMY-Y1010-G
Total down-stream Indoor capacity	<=P200	<=P400	<=P650

* CMY-Y104-G can directly connect PUHY-(E)P200YHM, but can NOT directly connect PUHY-(E)P250YHM or above;
* CMY-Y108-G can directly connect PUHY-(E)P200-450YHM, but can NOT directly connect PUHY-(E)P500YSHM or above;
* CMY-Y1010-G can directly connect PUHY-(E)P200-650Y(S)HM;
* CMY-Y104-G can NOT connect P200,P250 Indoor, but CMY-Y108, Y1010-G can do;
* Concerning detailed usage of Header parts, refer to its Installation Manual.

Note3. Indoor capacity is described as its model size;
For example, PEFY-P32VMM-E, its capacity is P32;
Note4. Total down-stream Indoor capacity is the summary of the model size of Indoors downstream.
For example, PEFY-P25VMM-E+PEFY-P32VMM-E: Total Indoor capacity=P25+P32=P57
Note5. Piping sized determined by the Total down-stream indoor capacity is NOT necessary to be bigger than the up-stream one.
i.e. A>=B; A>=C>=D

3-2-4. Refrigerant charging calculation

Sample connection(with 8 indoor units)

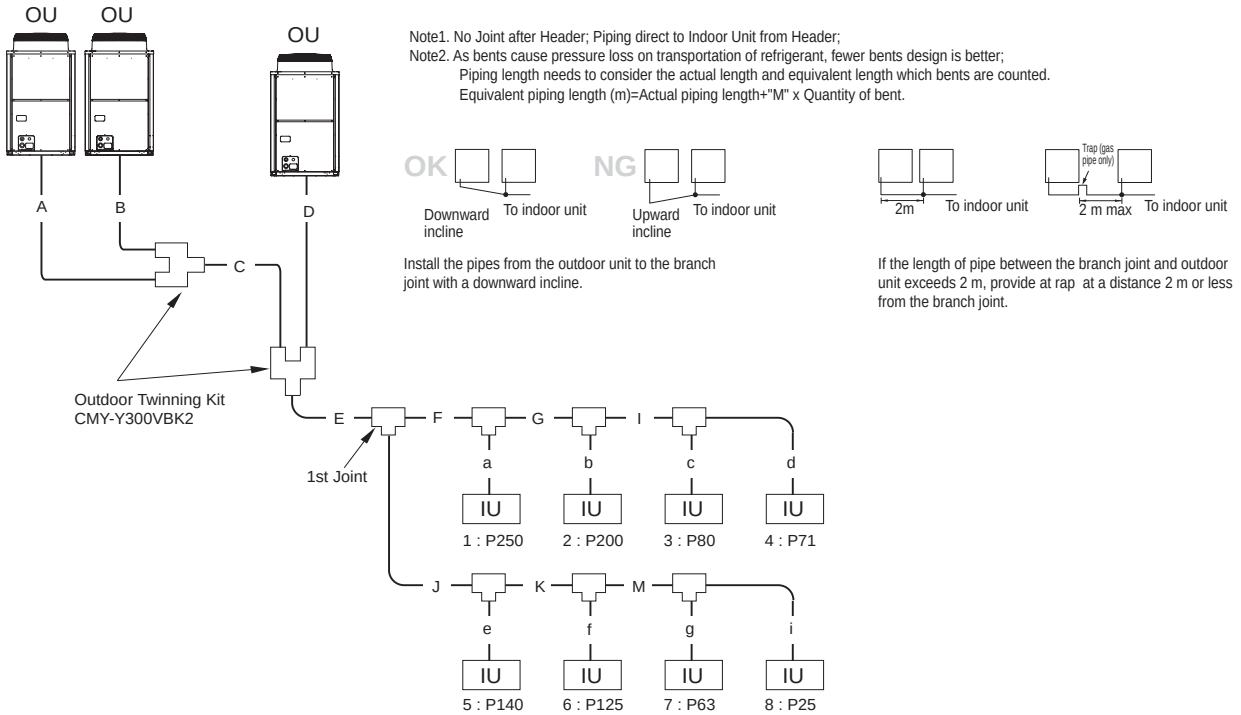

■ Amount of refrigerant to be charged

Refrigerant for extended pipes (field piping) is not factory-charged to the outdoor unit. Add an appropriate amount of refrigerant for each pipe on site.

Record the size of each liquid pipe and the amount of refrigerant that was charged on the outdoor unit for future reference.

■ Calculating the amount of refrigerant to be charged

- The amount of refrigerant to be charged is calculated with the size of the on-site-installed liquid pipes and their length.
- Calculate the amount of refrigerant to be charged according to the formula below.
- Round up the calculation result to the nearest 0.1kg. (i.e., 16.08 kg = 16.1 kg)

<Amount of refrigerant to be charged>

■ Calculating the amount of refrigerant to be charged

Total length of ø19.05 liquid pipe x 0.29	+	Total length of ø15.88 liquid pipe x 0.2	+	Total length of ø12.7 liquid pipe x 0.12	+	Total length of ø9.52 liquid pipe x 0.06	+	Total length of ø6.35 liquid pipe x 0.024	+
(m)x0.29(kg/m)		(m)x0.2(kg/m)		(m)x0.12(kg/m)		(m)x0.06(kg/m)		(m)x0.024(kg/m)	

Total capacity of connected indoor units	Charged amount
~80	2.0kg
81~160	2.5kg
161~330	3.0kg
331~390	3.5kg
391~480	4.5kg
481~630	5.0kg
631~710	6.0kg
711~800	8.0kg
801~890	9.0kg
891~1070	10.0kg
1071~1250	12.0kg
1251~	14.0kg

■ Amount of factory-charged refrigerant

Outdoor unit model	Charged amount
P200 model	6.5kg
P250 model	9.0kg
P300 model	
EP250 model	11.5kg
EP300 model	
P350 model	
P400 model	
P450 model	

■ Sample calculation

A : ø9.52	3m	Indoor			
B : ø12.70	2m	1:P250	a : ø9.52	15m	
C : ø19.05	2m	2:P200	b : ø9.52	15m	
D : ø15.88	1m	3:P80	c : ø9.52	5m	
E : ø19.05	40m	4:P71	d : ø9.52	5m	
F : ø15.88	10m	5:P140	e : ø9.52	5m	
G : ø12.70	5m	6:P125	f : ø9.52	5m	
I : ø9.52	5m	7:P63	g : ø9.52	5m	
J : ø9.52	30m	8:P25	i : ø6.35	5m	
K : ø9.52	5m				
M : ø9.52	5m				

Total length for each pipe size :	ø19.05	C+E=42
	ø15.88	D+F=1+10=11m
	ø12.70	B+G=2+5=7m
	ø9.52	A+I+J+K+M+a+b+c+d+e+f+g=3+5+30+5+5+15+15+5+5+5+5+5=103m
	ø6.35	i=5m
This yields the following result :		=40x0.29+11x0.2+7x0.12+103x0.06+5x0.024+10
		=31.52kg
		≒31.5kg

4. Outdoor Installation

4-1. Requirement on installation site

1. No direct thermal radiation to the unit.
2. No possibility of annoying the neighbors by the sound of the unit.
   Valves and refrigerant flow on the outdoor unit may generate noise.
3. Avoid the sites where strong winds blow.
4. With strength to bear the weight of the unit.
5. Drain flow from the unit is cared at heating mode.
6. Enough space for installation and service as shown at 4-2.
7. Avoid the sites where acidic solutions or chemical sprays (sulfur series) are used frequently.
8. The unit should be secure from combustible gas, oil, steam, chemical gas like acidic solution, sulfur gas and so on.

4-2. Spacing

In case of single installation

- Secure enough space around the unit as shown in the figure.

<A> : Top view
<B> : Side view
<C> : When there is little space up to an obstruction

Ⓐ : Front
Ⓑ : Unit height
Ⓒ : Back
Ⓓ : Air outlet guide (Procured at the site)

(1) If the distance is 300 mm [11-13/16 in.] or more between the rear side and the wall

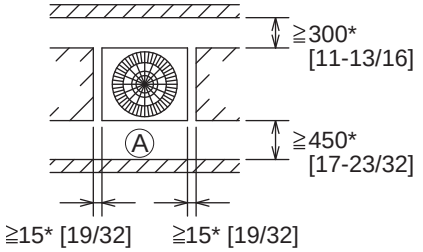

<A>

(2) If the distance is 100 mm [3-15/16 in.] or more between the rear side and the wall

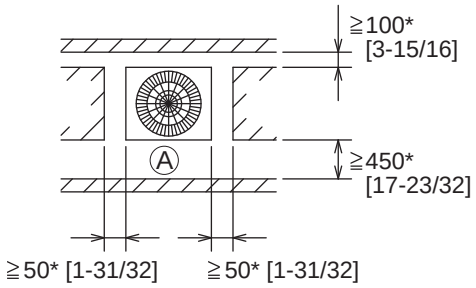

<A>

(3) If the wall height (H) of the front, rear or side exceeds the wall height restriction

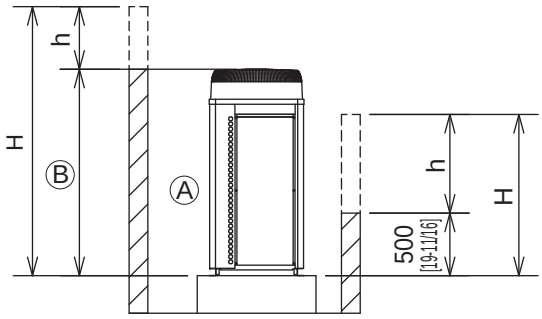

<B>

- When the height of the walls on the front, back or on the sides <H> exceeds the wall height limit as defined below, add the height that exceeds the height limit <h> to the figures that are marked with an asterisk.

<Wall height limit> Front: Up to the unit height
Back: Up to 500mm [19-11/16 in.] from the unit bottom
Side: Up to the unit height

(4) If there are obstacles at the upper part of the unit

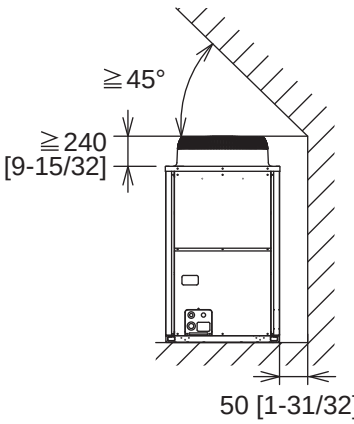

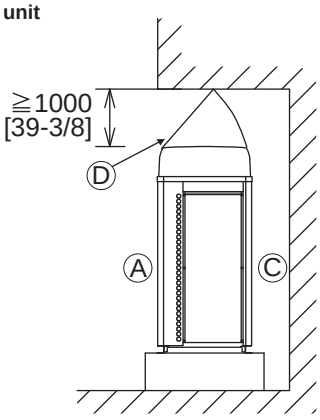

<C>

(Unit : mm [in.])

System Y

In case of collective installation and continuous installation

Ⓐ : Front Ⓒ : Wall height (H)

Ⓑ : Must be open

- When multiple units are installed adjacent to each other, secure enough space to allow for air circulation and passageways between groups of units as shown in the figures.
- At least two sides must be left open.
- As with the single installation, add the height that exceeds the height limit <h> to the figures that are marked with an asterisk.
- If there is a wall at both the front and the rear of the unit, install up to six units consecutively in the side direction and provide a space of 1000mm or more as inlet space/passage space for each six units.

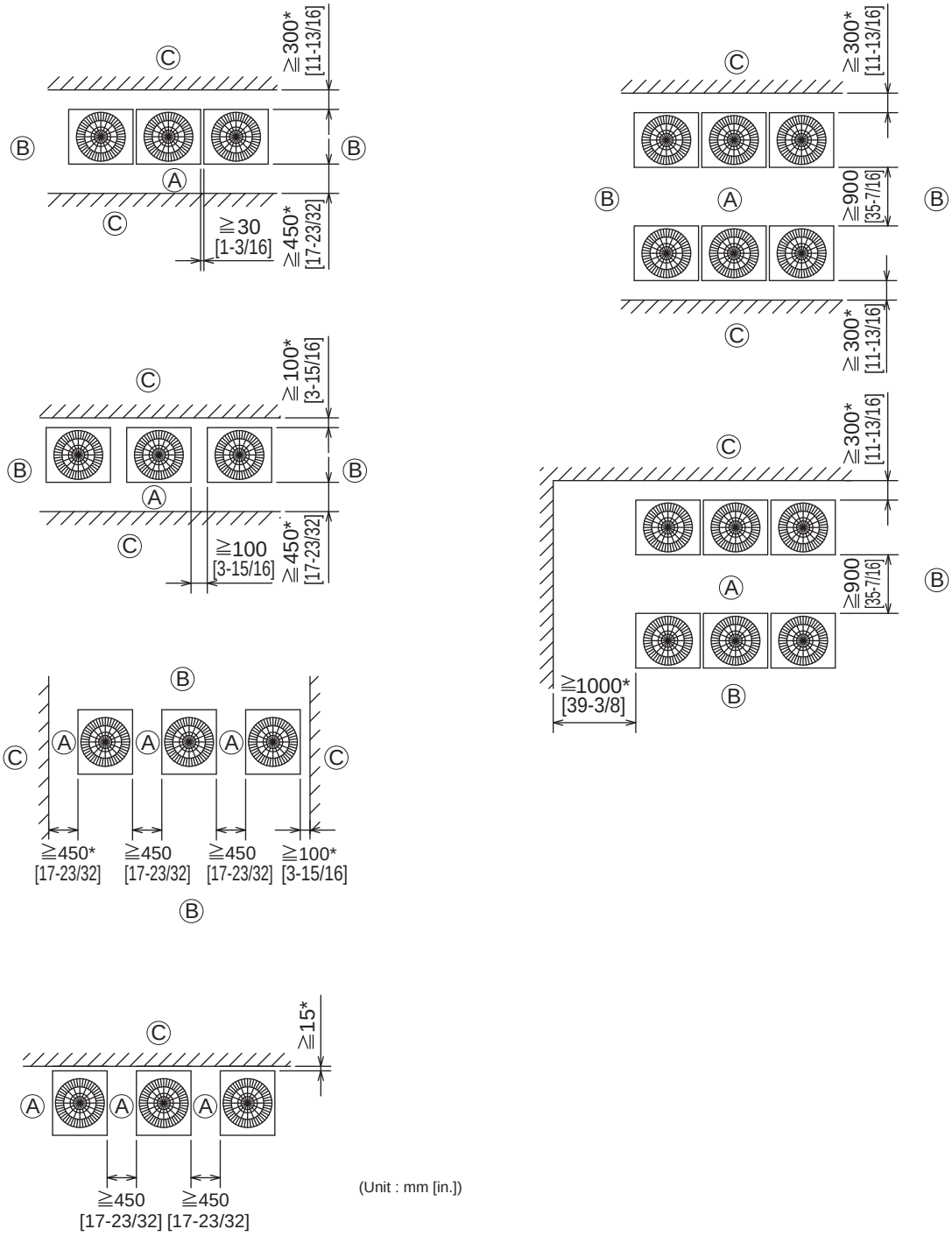

(Unit : mm [in.])

4-3. Piping direction

4-3-1. Lifting method

· When lifting the unit with ropes, run the ropes under the unit and use the lifting hole.
· Support the unit at four points with two ropes, and avoid giving mechanical shock.
· Suspension rope angle must be 40˚ or less, so as to avoid compressing fan guard.
· Use two ropes, each at least 8m [26 ft.] in length
· Use ropes strong enough to support the weight of the unit.
· Always suspend the unit from four corners. (It is dangerous to suspend a unit from two corners and must not be attempted.)
· Use protective pads to keep the ropes from scratching the panels on the unit.

(Unit : m [ft.])

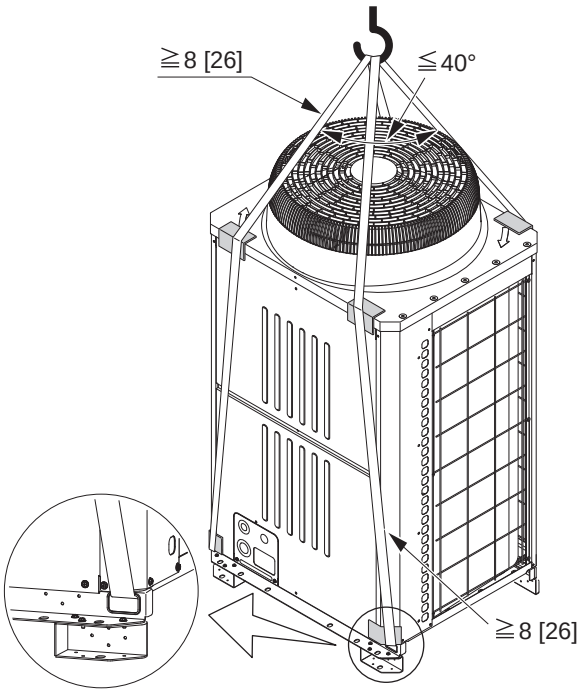

⚠ CAUTION

Exercise caution when transporting products.

· Products weighing more than 20 kg [45 LBS] should not be carried alone.
· Do not carry the product by the PP bands.
· To avoid the risk of injury, do not touch the heat exchanger fins.
· Plastic bags may pose a risk of choking hazard to children. Tear plastic bags into pieces before disposing of them.
· When lifting and transporting outdoor units with ropes, run the ropes through lifting hole at the unit base. Securely fix the unit so that the ropes will not slide off, and always lift the unit at four points to prevent the unit from falling.

4-3-2. Installation

- Secure the unit with anchor bolts as shown in the figure below so that the unit will not topple over with strong wind or during an earthquake.
- Install the unit on a durable base made of such materials as concrete or angle steel.
- Take appropriate anti-vibration measures (e.g., vibration damper pad, vibration isolation base) to keep vibrations and noise from being transmitted from the unit through walls and floors.
- When using a rubber cushion, install it so that the cushion covers the entire width of the unit leg.
- Install the unit in such a way that the corner of the angle bracket at the base of the unit shown in the figure below is securely supported.
- Install the anchor bolt in such a way that the top end of the anchor bolt do not stick out more than 30 mm [1-3/16 in.].
- This unit is not designed to be anchored with post-installation-type anchor bolts, although by adding fixing brackets anchoring with such type of anchor bolts becomes possible.

⚠ WARNING

Properly install the unit on a surface that can withstand the weight of the unit. Unit installed on an unstable surface may fall and cause injury.

⚠ WARNING

Take appropriate safety measures against strong winds and earthquakes to prevent the unit from falling.

Ⓐ: M10 anchor bolt procured at the site.

Ⓑ: Corner is not seated.

Ⓒ: Fixing bracket for hole-in anchor bolt (3 locations to fix with screws).

Ⓓ: Detachable leg

<Without detachable leg>

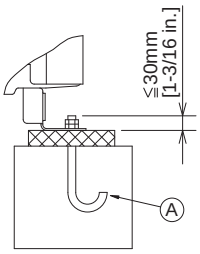

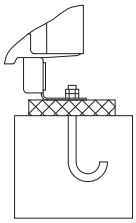

Install the unit in such a way that the corner of the angle bracket at the base of the unit shown in the figure is securely supported. The brackets may bend if they are not securely supported.

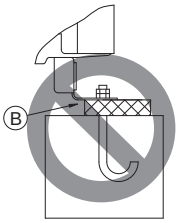

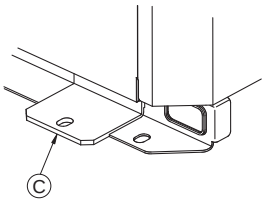

<With detachable leg>

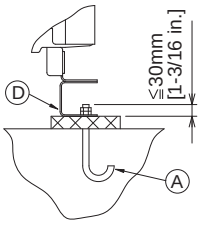

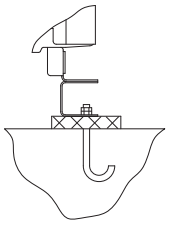

Install the unit in such a way that the corner of the angle bracket at the base of the unit shown in the figure is securely supported. The brackets may bend if they are not securely supported.

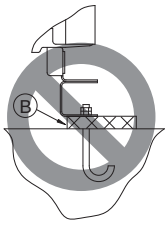

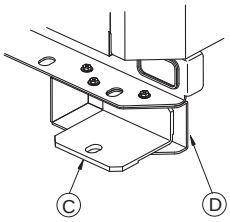

Take into consideration the durability of the base, water drainage route (Drain water is discharged from outdoor units during operation.), piping route, and wiring route when performing foundation work.

4-3-3. Anchor bolt positions

• Individual installation

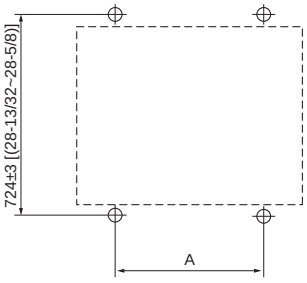

(For maintenance)

• Collective installation

(Unit : mm [in.])

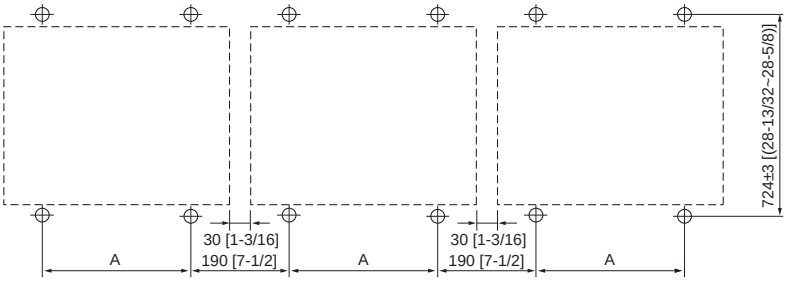

Leave a minimum of 30 mm [1-3/16 in.] between units.

PUHY	P200-P300, EP200	P350-P450, EP250, EP300
A	760±2 [29-15/16(29-27/32~30)]	1060±2 [41-3/4(41-21/32~41-13/16)]

4-3-4. Installation

When the pipes and/or cables are routed at the bottom of the unit, make sure that the through hole at the base of the unit does not get blocked with the installation base.
When the pipes are routed at the bottom of the unit, the base should be at least 100 mm [3-15/16 in.] in height.

· P200-P300
EP200

(Unit : mm [in.])

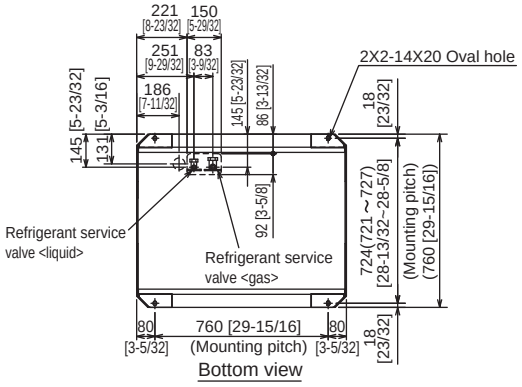

· P350-P450
EP250, EP300

(Unit : mm [in.])

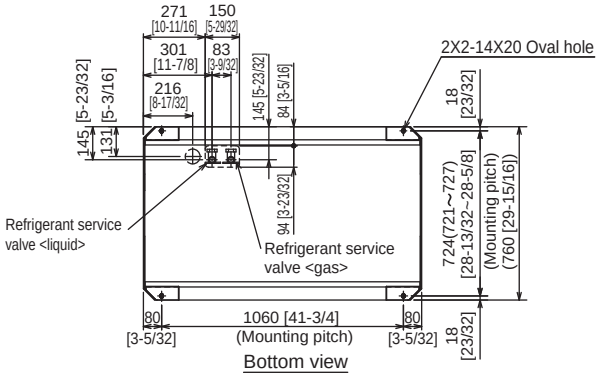

Installation base parallel to the unit's front panel

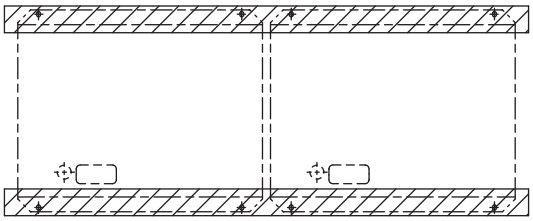

Installation base perpendicular to the unit's front panel

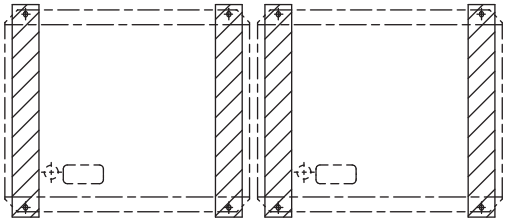

4-3-5. Refrigerant pipe routing

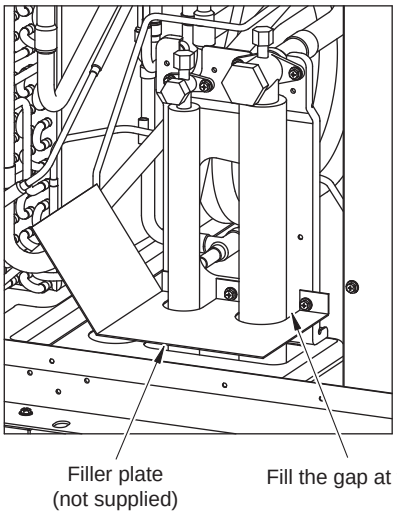

The gaps around the edges of through holes for pipes and wires on the unit allow water or mice to enter the unit and damage its parts. Close these gaps with filler plates.

This unit allows two types of pipe routing:
- Bottom piping
- Front piping

⚠ CAUTION

To prevent small animals, water, and snow from entering the unit and damage its parts, close the gap around the edges of through holes for pipes and wires with filler plates.

4-3-6. Twinning on the outdoor unit side

- The tilt angle of the twinning pipe
  The tilt angle of the twinning pipe must be within ±15° with the horizontal plane.
  Tilting the twinning pipe more than specified will cause damage to the unit.

- The length of the straight part of the pipe before the branching
  For the twinning kit, always use the accessory piping parts.
  The length of the straight part of pipe connected in front of the twinning pipe must be 500 mm [19 in.] or longer.
  (Connect the field piping so that the length of the straight part of pipe connected in front of the twinning pipe can be 500 mm [19 in.] or longer.)
  If the length is less than 500 mm [19 in.], it will cause damage to the unit.

Note: See the following drawing for the fitting position of the twinning pipe.

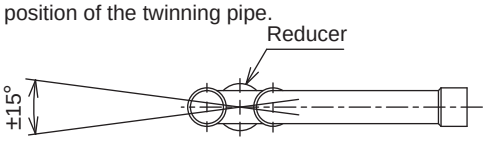

The tilt angle of the reducer should be within ±15°with the horizontal plane.

- The piping connection
  When connecting the twinning kit to the outdoor unit, note the following:
  If the length of piping from the twinning kit to the outdoor unit is more than 2 m [6 ft.], install a trap within 2 m [6 ft.] from the outdoor unit. The height of the trap must be 200 mm [7 in.] or higher.

<2 m [6 ft.] or less>

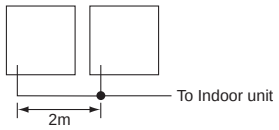

<More than 2 m [6 ft.]>

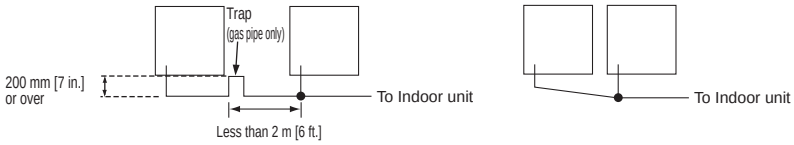

When installing the twinning kit in a higher position than the outdoor unit base, make sure that the twinning kit is installed in a position lower than 200 mm [7 in.] from the outdoor unit base.

<PUHY-P500YSHM-A>

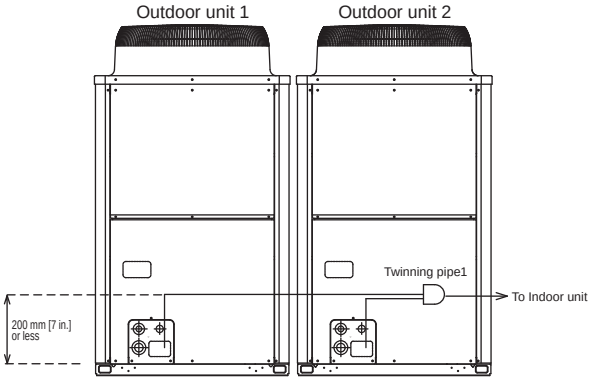

<PUHY-P950YSHM-A>

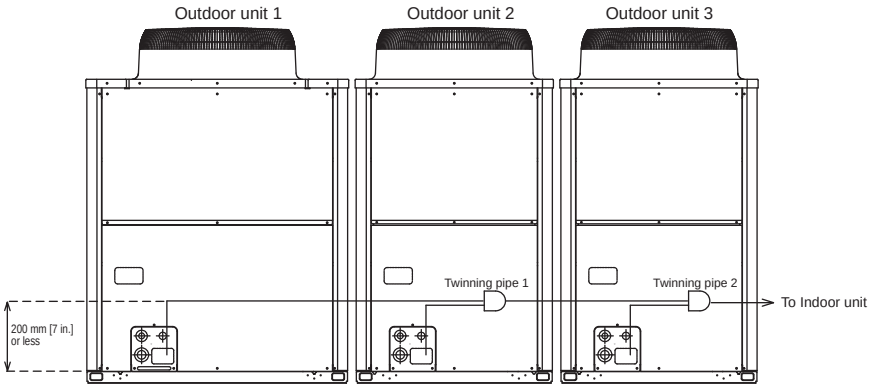

4-3-7. Twinning on the outdoor unit side

See the following drawing for connecting the pipes between the outdoor units.

<PUHY-P500YSHM-A>

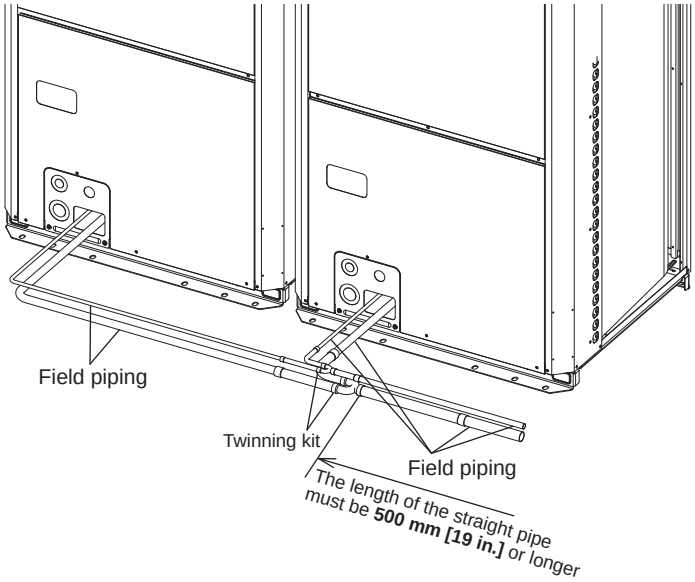

<PUHY-P900YSHM-A>

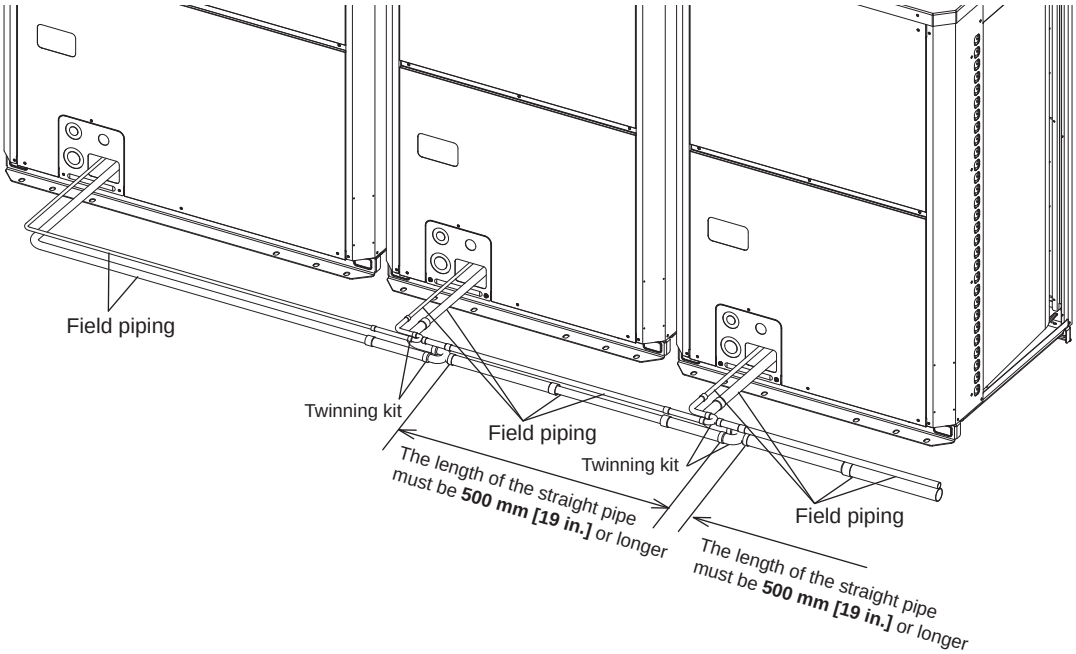

⚠ CAUTION

The length of the straight pipe must be 500mm[19 in.] or longer. If not, it may cause improper operation.

4-4. Weather countermeasure

In cold and/or snowy areas, sufficient countermeasures to wind and snow damages should be taken for operating unit in normal and good condition in winter time. Surround the units with snow nets or fences to protect them from snow. Even in the other areas, full consideration is required for installation of unit in order to prevent abnormal operations caused by wind or snow. **When rain and snow directly fall on unit in the case of air-conditioning operations in 10 or less degrees centigrade outdoor air (50 or less degrees fahrenheit outdoor air) , mount inlet and outlet ducts on unit for assuring stable operations.**

Countermeasure to snow and wind

Prevention the Outdoor unit from wind and snow damages in cold or snowy areas, snow hood shown below is recommended and helpful.

• Snow hood

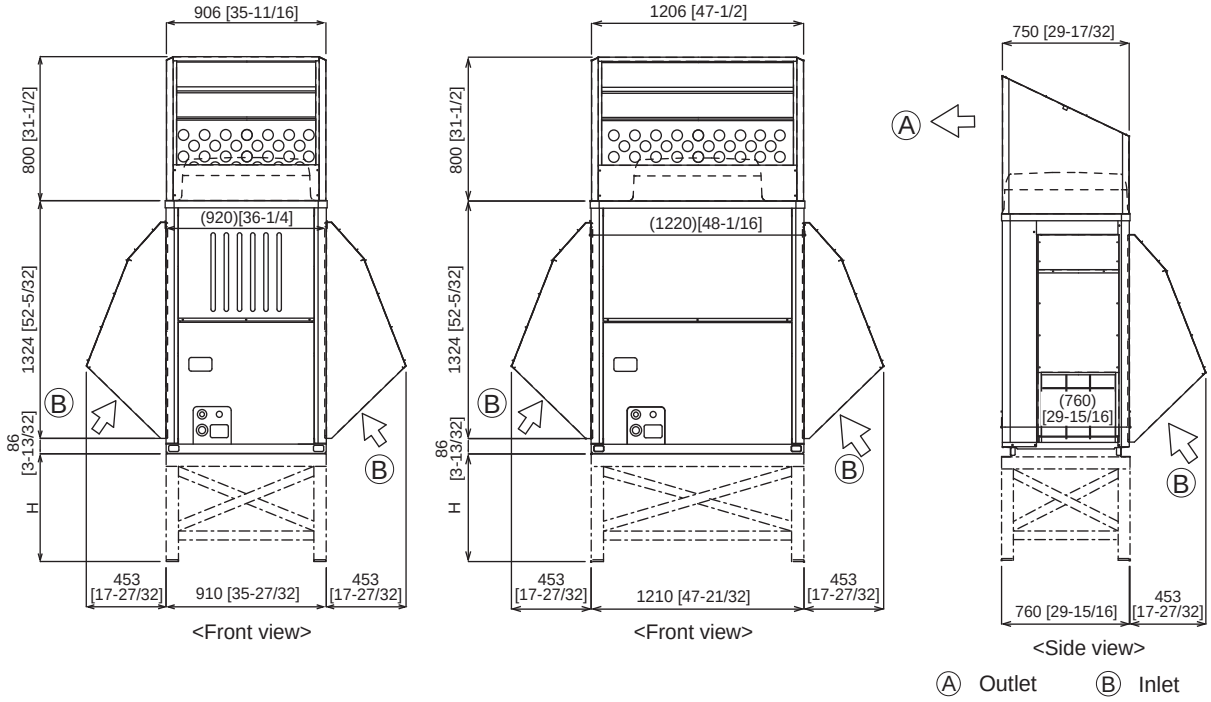

Note:

1. Height of frame base for snow damage prevention (H) shall be twice as high as expected snowfall. Width of frame base shall not exceed that of the unit. The frame base shall be made of angle steel, etc., and designed so that snow and wind slip through the structure. (If frame base is too wide, snow will be accumulated on it.)
2. Install unit so that wind will not directly lash against openings of inlet and outlet ducts.
3. Build frame base at customer referring to this figure.
   Material : Galvanized steel plate 1.2T [1/16 in. T]
   Painting : Overall painting with polyester powder
   Color : Munsell 5Y8/1 (same as that of unit)
4. To install units side by side, install a filler plate between the fan guard and the outlet-side snow food as shown in Figure A.
   (The filler plate provided accommodates the installation pitch of between 30-80 mm [1-3/16~3-5/32 in.].)
5. When the unit is used in a cold region and the heating operation is continuously performed for a long time when the outside air temperature is below freezing, install a heater to the unit base or take other appropriate measures to prevent water from freezing on the base.

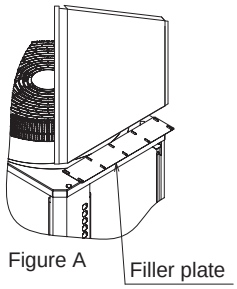

Figure A

Countermeasure to wind

Referring to the figure shown below, take appropriate measures which will suit the actual situation of the place for installation.
A unit installed alone is vulnerable to strong winds. Select the installation site carefully to minimize the effect of winds.
To install a unit in a place where the wind always blows from the same direction, install the unit so that the outlet faces away from the direction of the wind.

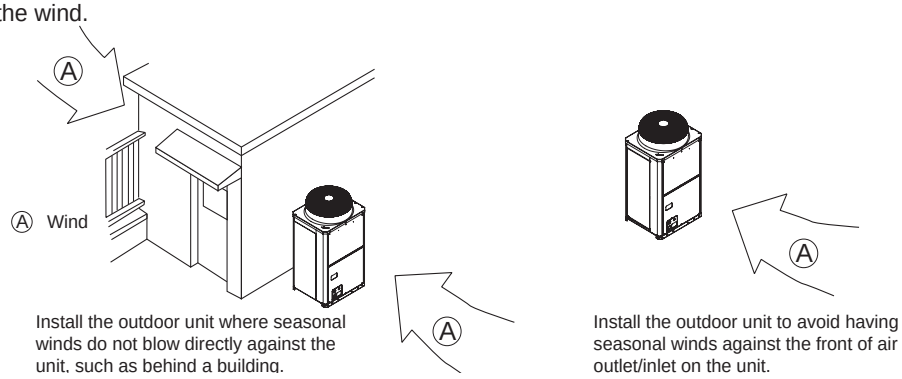

Install the outdoor unit where seasonal winds do not blow directly against the unit, such as behind a building.

Install the outdoor unit to avoid having seasonal winds against the front of air outlet/inlet on the unit.

4-5. Caution on selecting outdoor units

Consult your dealer when the following issues on Y system are the key concern.
· Warm air may flow out from the indoor unit during heating Thermo-OFF.
· Refrigerant flow sound may occur in the rooms with low background noise such as hotel rooms, hospital rooms, bedrooms, or conference rooms.
To avoid the above issues on Y system, changing board settings on the indoor and outdoor units is required.
Ask AC&R Works for details.

5. Caution for refrigerant leakage

The installer and/or air conditioning system specialist shall secure safety against refrigerant leakage according to local regulations or standards.
The following standard may be applicable if no local regulation or standard is available.

5-1. Refrigerant property

R410A refrigerant is harmless and incombustible. The R410A is heavier than the indoor air in density. Leakage of the refrigerant in a room has possibility to lead to a hypoxia situation. Therefore, the Critial concentration specified below shall not be exceeded even if the leakage happens.

- **Critical concentration**

Critical concentration hereby is the refrigerant concentration in which no human body would be hurt if immediate measures can be taken when refrigerant leakage happens.

Critical concentration of R410A: 0.30kg/m^3
(The weight of refrigeration gas per 1 m^3 air conditioning space.);
* The Critical concentration is subject to ISO5149, EN378-1.

For the CITY MULTI system, the concentration of refrigerant leaked should not have a chance to exceed the Critical concentration in any situntion.

5-2. Confirm the Critical concentration and take countermeasure

The maximum refrigerant leakage concentration (Rmax) is defined as the result of the possible maximum refrigerant weight (Wmax) leaked into a room divided by its room capacity (V).It is referable to Fig.5-1.The refrigerant of Outdoor unit here includes its original charge and additional charge at the site.
The additional charge is calculated according to "**3-3 .Refrigerant charging calculation**" and shall not be over charged at the site.
Procedure 5-2-1~3 tells how to confirm maximum refrigerant leakage concentration (Rmax) and how to take countermeasures against a possible leakage.

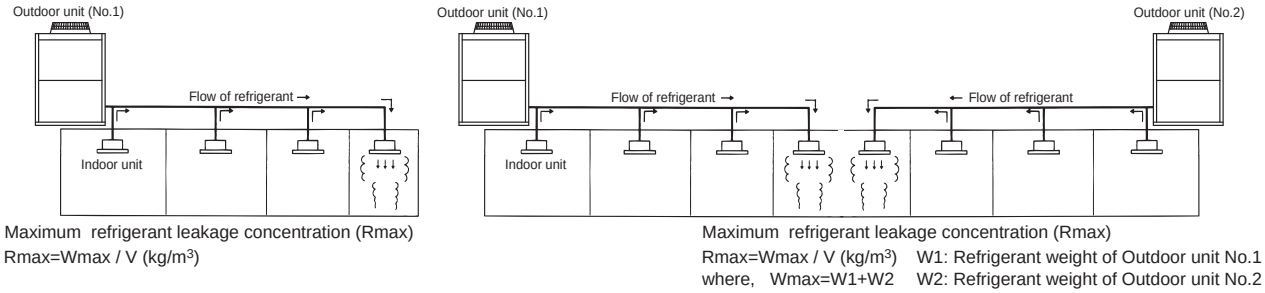

Fig. 5-1 The maximum refrigerant leakage concentration

5-2-1.Find the room capacity (V),
If a room having total opening area more than 0.15% of the floor area at a low position with another room/space, the two rooms/space are considered as one.The total space shall be added up.

5-2-2.Find the possible maximum leakage (Wmax) in the room.If a room has Indoor unit(s) from more than 1 Outdoor unit, add up the refrigerant of the Outdoor units.

5-2-3.Divide (Wmax) by (V) to get the maximum refrigerant leakage concentration (Rmax).

5-2-4.Find if there is any room in which the maximum refrigerant leakage concentration (Rmax) is over 0.30kg/m^3.
If no, then the CITY MULTI is safe against refrigerant leakage.
If yes, following countermeasure is recommended to do at site.
Countermeasure 1:Let-out (making V bigger)
Design an opening of more than 0.15% of the floor area at a low position of the wall to let out the refrigerant whenever leaked.
e.g.make the upper and lower seams of door big enough.
Countermeasure 2:Smaller total charge (making Wmax smaller)
e.g.Avoid connecting more than 1 Outdoor unit to one room.
e.g.Using smaller model size but more Outdoor units.
e.g.Shorten the refrigerant piping as much as possible.
Countermeasure 3:Fresh air in from the ceiling (Ventilation)
As the density of the refrigerant is bigger than that of the air.Fresh air supply from the ceiling is better than air exhausting from the ceiling.
Fresh air supply solution refers to Fig.5-2~4.

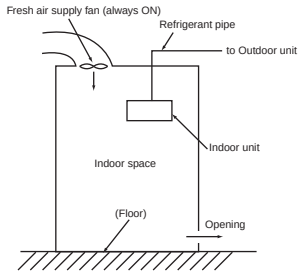

Fig.5-2.Fresh air supply always ON

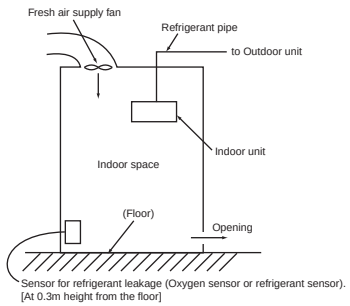

Fig.5-3.Fresh air supply upon sensor action

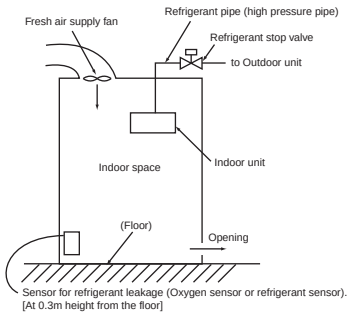

Fig.5-4.Fresh air supply and refrigerant shut-off upon sensor action

Note 1.Countermeasure 3 should be done in a proper way in which the fresh air supply shall be on whenever the leakage happens.
Note 2.In principle, MITSUBISHI ELECTRIC requires proper piping design, installation and air-tight testing after installation to avoid leakage happening.
In the area should earthquake happen, anti-vibration measures should be fully considered.
The piping should consider the extension due to the temperature variation.

CITY MULTI
SYSTEM DESIGN HP SERIES

1. Electrical work ..... 4 - 82
   1-1.General cautions ..... 4 - 82
   1-2.Power supply for Indoor unit and Outdoor unit ..... 4 - 83
   1-3.Power cable specifications ..... 4 - 87
   1-4.Power supply examples ..... 4 - 88
2. M-NET control ..... 4 - 90
   2-1.Transmission cable length limitation ..... 4 - 90
   2-2.Transmission cable specifications ..... 4 - 91
   2-3.System configuration restrictions ..... 4 - 92
   2-4.Address setting ..... 4 - 95
3. Piping Design ..... 4 - 108
   3-1.R410A Piping material ..... 4 - 108
   3-2.Piping Design ..... 4 - 109
   3-3.Refrigerant charging calculation ..... 4 - 111
4. Outdoor Installation ..... 4 - 112
   4-1.Requirement on installation site ..... 4 - 112
   4-2.Spacing ..... 4 - 113
   4-3.Piping direction ..... 4 - 115
   4-4.Weather countermeasure ..... 4 - 120
5. Caution for refrigerant leakage ..... 4 - 121
   5-1.Refrigerant property ..... 4 - 121
   5-2.Confirm the Critical concentration and take countermeasure ..... 4 - 121

1. Electrical work

1-1. General cautions

① Follow ordinance of your governmental organization for technical standard related to electrical equipment, wiring regulations, and guidance of each electric power company.
② Wiring for control (hereinafter referred to as transmission cable) shall be (50mm[1-5/8in.] or more) apart from power source wiring so that it is not influenced by electric noise from power source wiring. (Do not insert transmission cable and power source wire in the same conduit.)
③ Be sure to provide designated grounding work to outdoor unit.
④ Give some allowance to wiring for electrical part box of indoor and outdoor units, because the box is sometimes removed at the time of service work.
⑤ Never connect 380~415V(220~240V) power source to terminal block of transmission cable. If connected,electrical parts will be burnt out.
⑥ Use 2-core shield cable for transmission cable. If transmission cables of different systems are wired with the same multiple-core cable, the resultant poor transmitting and receiving will cause erroneous operations.

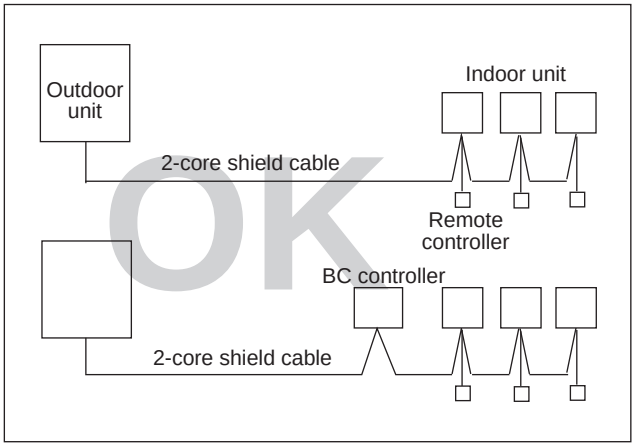

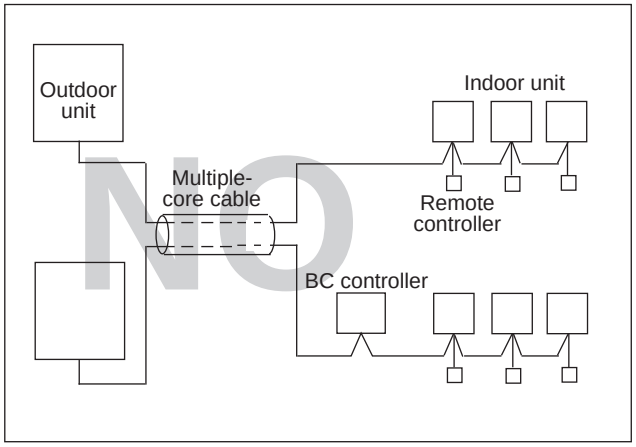

1-2. Power supply for Indoor unit and Outdoor unit

1-2-1. Electrical characteristics of Indoor unit

Symbols: MCA : Min.Circuit Amps (=1.25xFLA) FLA : Full Load Amps
IFM :Indoor Fan Motor Output : Fan motor rated output

PMFY-P-VBM-E	Power supply			IFM	
	Volts / Hz	Range +-10%	MCA(A)	Output(kW)	FLA(A)
PMFY-P20VBM-E	220-240V / 50Hz 220V / 60Hz	Max.: 264V Min.: 198V	0.25	0.028	0.20
PMFY-P25VBM-E			0.26	0.028	0.21
PMFY-P32VBM-E			0.26	0.028	0.21
PMFY-P40VBM-E			0.33	0.028	0.26

PLFY-P-VCM-E	Power supply			IFM	
	Volts / Hz	Range +-10%	MCA(A)	Output(kW)	FLA(A)
PLFY-P20VCM-E	220-240V / 50Hz	Max.: 264V Min.: 198V	0.29	0.011	0.23
PLFY-P25VCM-E			0.29	0.015	0.23
PLFY-P32VCM-E			0.35	0.020	0.28
PLFY-P40VCM-E			0.35	0.020	0.28

PLFY-P-VBM-E	Power supply			IFM	
	Volts / Hz	Range +-10%	MCA(A)	Output(kW)	FLA(A)
PLFY-P32VBM-E	220-240V / 50Hz 220V / 60Hz	Max.: 264V Min.: 198V	0.28	0.050	0.22
PLFY-P40VBM-E			0.36	0.050	0.29
PLFY-P50VBM-E			0.36	0.050	0.29
PLFY-P63VBM-E			0.45	0.050	0.36
PLFY-P80VBM-E			0.64	0.050	0.51
PLFY-P100VBM-E			1.25	0.120	1.00
PLFY-P125VBM-E			1.34	0.120	1.07

PLFY-P-VLMD-E	Power supply			IFM	
	Volts / Hz	Range +-10%	MCA(A) (50 / 60Hz)	Output(kW)	FLA(A) (50 / 60Hz)
PLFY-P20VLMD-E	220-240V / 50Hz 220-230V / 60Hz	Max.: 264V Min.: 198V	0.45 / 0.46	0.015	0.36 / 0.37
PLFY-P25VLMD-E			0.45 / 0.46	0.015	0.36 / 0.37
PLFY-P32VLMD-E			0.45 / 0.46	0.015	0.36 / 0.37
PLFY-P40VLMD-E			0.50 / 0.53	0.015	0.40 / 0.42
PLFY-P50VLMD-E			0.51 / 0.54	0.020	0.41 / 0.43
PLFY-P63VLMD-E			0.61 / 0.64	0.020	0.49 / 0.51
PLFY-P80VLMD-E			0.90 / 0.93	0.020	0.72 / 0.74
PLFY-P100VLMD-E			0.94 / 1.10	0.030	0.75 / 0.88
PLFY-P125VLMD-E			1.69 / 1.69	0.078x2	1.35 / 1.35

PEFY-P-VMR-E-L/R	Power supply			IFM	
	Volts / Hz	Range +-10%	MCA(A) (50 / 60Hz)	Output(kW)	FLA(A) (50 / 60Hz)
PEFY-P20VMR-E-L/R	220-240V / 50Hz 220-230V / 60Hz	Max.: 264V Min.: 198V	0.37 / 0.37	0.018	0.29 / 0.29
PEFY-P25VMR-E-L/R			0.37 / 0.37	0.018	0.29 / 0.29
PEFY-P32VMR-E-L/R			0.43 / 0.48	0.023	0.34 / 0.38

PEFY-P-VMS1-E	Power supply			IFM	
	Volts / Hz	Range +-10%	MCA(A) (50 / 60Hz)	Output(kW)	FLA(A) (50 / 60Hz)
PEFY-P15VMS1-E	220-240V / 50Hz 220-240V / 60Hz	Max.: 264V Min.: 198V	0.63 / 0.63	0.096	0.50 / 0.50
PEFY-P20VMS1-E			0.70 / 0.70	0.096	0.56 / 0.56
PEFY-P25VMS1-E			0.75 / 0.75	0.096	0.60 / 0.60
PEFY-P32VMS1-E			0.75 / 0.75	0.096	0.60 / 0.60
PEFY-P40VMS1-E			0.83 / 0.82	0.096	0.66 / 0.65
PEFY-P50VMS1-E			1.02 / 1.00	0.096	0.81 / 0.80
PEFY-P63VMS1-E			1.08 / 1.07	0.096	0.86 / 0.85

Symbols: MCA : Min.Circuit Amps (=1.25xFLA) FLA : Full Load Amps
IFM :Indoor Fan Motor Output : Fan motor rated output

PEFY-P-VMS1L-E	Power supply			IFM	
	Volts / Hz	Range +-10%	MCA(A) (50 / 60Hz)	Output(kW)	FLA(A) (50 / 60Hz)
PEFY-P15VMS1L-E	220-240V / 50Hz 220-240V / 60Hz	Max.: 264V Min.: 198V	0.46 / 0.46	0.096	0.37 / 0.37
PEFY-P20VMS1L-E			0.54 / 0.54	0.096	0.43 / 0.43
PEFY-P25VMS1L-E			0.59 / 0.59	0.096	0.47 / 0.47
PEFY-P32VMS1L-E			0.59 / 0.59	0.096	0.47 / 0.47
PEFY-P40VMS1L-E			0.68 / 0.68	0.096	0.54 / 0.54
PEFY-P50VMS1L-E			0.84 / 0.84	0.096	0.67 / 0.67
PEFY-P63VMS1L-E			0.91 / 0.91	0.096	0.73 / 0.73

PEFY-P-VMH-E	Power supply			IFM	
	Volts / Hz	Range +-10%	MCA(A) (50 / 60Hz)	Output(kW)	FLA(A) (50 / 60Hz)
PEFY-P40VMH-E	220-240V / 50Hz 220-240V / 60Hz	Max.: 264V Min.: 198V	1.21 / 1.61	0.08	0.97 / 1.29
PEFY-P50VMH-E			1.21 / 1.61	0.08	0.97 / 1.29
PEFY-P63VMH-E			1.49 / 1.95	0.12	1.19 / 1.56
PEFY-P71VMH-E			1.58 / 2.18	0.14	1.26 / 1.74
PEFY-P80VMH-E			1.85 / 2.40	0.18	1.48 / 1.92
PEFY-P100VMH-E			3.03 / 3.93	0.26	2.42 / 3.14
PEFY-P125VMH-E			3.03 / 3.93	0.26	2.42 / 3.14
PEFY-P140VMH-E			3.10 / 3.98	0.26	2.48 / 3.18
PEFY-P200VMH-E	380-415V / 50Hz 380-415V / 60Hz	Max.: 456V Min.: 342V	2.03 / 2.33	0.76	1.62 / 1.86
PEFY-P250VMH-E			2.50 / 2.88	1.08	2.00 / 2.30

PEFY-P-VMA-E	Power supply			IFM	
	Volts / Hz	Range +-10%	MCA(A)	Output(kW)	FLA(A)
PEFY-P20VMA-E	220-240V / 50Hz 220-240V / 60Hz	Max.: 264V Min.: 198V	1.03	0.085	0.82
PEFY-P25VMA-E			1.03	0.085	0.82
PEFY-P32VMA-E			1.18	0.085	0.95
PEFY-P40VMA-E			1.43	0.085	1.14
PEFY-P50VMA-E			1.54	0.085	1.23
PEFY-P63VMA-E			2.22	0.121	1.78
PEFY-P71VMA-E			2.46	0.121	1.97
PEFY-P80VMA-E			2.47	0.121	1.98
PEFY-P100VMA-E			3.30	0.244	2.64
PEFY-P125VMA-E			3.39	0.244	2.71
PEFY-P140VMA-E			3.29	0.244	2.63

PEFY-P-VMAL-E	Power supply			IFM	
	Volts / Hz	Range +-10%	MCA(A)	Output(kW)	FLA(A)
PEFY-P20VMAL-E	220-240V / 50Hz 220-240V / 60Hz	Max.: 264V Min.: 198V	0.92	0.085	0.74
PEFY-P25VMAL-E			0.92	0.085	0.74
PEFY-P32VMAL-E			1.07	0.085	0.86
PEFY-P40VMAL-E			1.32	0.085	1.06
PEFY-P50VMAL-E			1.40	0.085	1.12
PEFY-P63VMAL-E			2.08	0.121	1.67
PEFY-P71VMAL-E			2.32	0.121	1.86
PEFY-P80VMAL-E			2.36	0.121	1.89
PEFY-P100VMAL-E			3.19	0.244	2.55
PEFY-P125VMAL-E			3.27	0.244	2.62
PEFY-P140VMAL-E			3.17	0.244	2.53

PEFY-P-VMH-E-F	Power supply			IFM	
	Volts / Hz	Range +-10%	MCA(A) (50 / 60Hz)	Output(kW)	FLA(A) (50 / 60Hz)
PEFY-P80VMH-E-F	220-240V / 50Hz 208-230V / 60Hz	Max.: 264V Min.: 187V	0.92 / 1.15	0.09	0.73 / 0.92
PEFY-P140VMH-E-F			1.58 / 1.84	0.14	1.26 / 1.47
PEFY-P200VMH-E-F	380-415V / 50Hz 380-415V / 60Hz	Max.: 456V Min.: 342V	0.73 / 0.93	0.20	0.58 / 0.74
PEFY-P250VMH-E-F			0.85 / 1.08	0.23	0.68 / 0.86

Symbols: MCA : Min.Circuit Amps (=1.25xFLA) FLA : Full Load Amps
IFM :Indoor Fan Motor Output : Fan motor rated output

PKFY-P-VBM-E	Power supply			IFM	
	Volts / Hz	Range +-10%	MCA(A)	Output(kW)	FLA(A)
PKFY-P15VBM-E	220-240V / 50Hz 220V / 60Hz	Max.: 264V Min.: 198V	0.25	0.017	0.20
PKFY-P20VBM-E			0.25	0.017	0.20
PKFY-P25VBM-E			0.25	0.017	0.20

PKFY-P-VHM-E	Power supply			IFM	
	Volts / Hz	Range +-10%	MCA(A)	Output(kW)	FLA(A)
PKFY-P32VHM-E	220-240V / 50Hz 220V / 60Hz	Max.: 264V Min.: 198V	0.38	0.030	0.30
PKFY-P40VHM-E			0.38	0.030	0.30
PKFY-P50VHM-E			0.38	0.030	0.30

PKFY-P-VKM-E	Power supply			IFM	
	Volts / Hz	Range +-10%	MCA(A)	Output(kW)	FLA(A)
PKFY-P63VKM-E	220-240V / 50Hz 220V / 60Hz	Max.: 264V Min.: 198V	0.36	0.056	0.29
PKFY-P100VKM-E			0.63	0.056	0.50

PCFY-P-VKM-E	Power supply			IFM	
	Volts / Hz	Range +-10%	MCA(A)	Output(kW)	FLA(A)
PCFY-P40VKM-E	220-240V / 50Hz 220V / 60Hz	Max.: 264V Min.: 198V	0.35	0.090	0.28
PCFY-P63VKM-E			0.41	0.095	0.33
PCFY-P100VKM-E			0.81	0.160	0.65
PCFY-P125VKM-E			0.95	0.160	0.76

PFFY-P-VKM-E	Power supply			IFM	
	Volts / Hz	Range +-10%	MCA(A)	Output(kW)	FLA(A)
PFFY-P20VKM-E	220-240V / 50Hz	Max.: 264V Min.: 198V	0.25	0.03x2	0.20
PFFY-P25VKM-E			0.25	0.03x2	0.20
PFFY-P32VKM-E			0.25	0.03x2	0.20
PFFY-P40VKM-E			0.30	0.03x2	0.24

PFFY-P-VLEM-E	Power supply			IFM	
	Volts / Hz	Range +-10%	MCA(A) (50 / 60Hz)	Output(kW)	FLA(A) (50 / 60Hz)
PFFY-P20VLEM-E	220-240V / 50Hz 208-230V / 60Hz	Max.: 264V Min.: 187V	0.24 / 0.31	0.015	0.19 / 0.25
PFFY-P25VLEM-E			0.24 / 0.31	0.015	0.19 / 0.25
PFFY-P32VLEM-E			0.36 / 0.38	0.018	0.29 / 0.30
PFFY-P40VLEM-E			0.40 / 0.41	0.030	0.32 / 0.33
PFFY-P50VLEM-E			0.50 / 0.51	0.035	0.40 / 0.41
PFFY-P63VLEM-E			0.58 / 0.59	0.050	0.46 / 0.47

Symbols: MCA : Min.Circuit Amps (=1.25xFLA) FLA : Full Load Amps
IFM :Indoor Fan Motor Output : Fan motor rated output

PFFY-P-VLRM-E	Power supply			IFM	
	Volts / Hz	Range +-10%	MCA(A) (50 / 60Hz)	Output(kW)	FLA(A) (50 / 60Hz)
PFFY-P20VLRM-E	220-240V / 50Hz 208-230V / 60Hz	Max.: 264V Min.: 187V	0.24 / 0.31	0.015	0.19 / 0.25
PFFY-P25VLRM-E			0.24 / 0.31	0.015	0.19 / 0.25
PFFY-P32VLRM-E			0.36 / 0.38	0.018	0.29 / 0.30
PFFY-P40VLRM-E			0.40 / 0.41	0.030	0.32 / 0.33
PFFY-P50VLRM-E			0.50 / 0.51	0.035	0.40 / 0.41
PFFY-P63VLRM-E			0.58 / 0.59	0.050	0.46 / 0.47

PFFY-P-VLRMM-E	Power supply			IFM	
	Volts / Hz	Range +-10%	MCA(A) (50 / 60Hz)	Output(kW)	FLA(A) (50 / 60Hz)
PFFY-P20VLRMM-E	220-240V / 50Hz	Max.: 264V Min.: 198V	0.59 / 0.58	0.096	0.47 / 0.46
PFFY-P25VLRMM-E			0.59 / 0.58	0.096	0.47 / 0.46
PFFY-P32VLRMM-E			0.69 / 0.69	0.096	0.55 / 0.55
PFFY-P40VLRMM-E			0.78 / 0.76	0.096	0.62 / 0.61
PFFY-P50VLRMM-E			0.80 / 0.79	0.096	0.64 / 0.63
PFFY-P63VLRMM-E			0.93 / 0.93	0.096	0.74 / 0.74

GUF-RDH3	Power supply			IFM	
	Volts / Hz	Range +-10%	MCA(A) (50 / 60Hz)	Output(kW)	FLA(A) (50 / 60Hz)
GUF-50RD(H)3	220-240V / 50Hz 220V / 60Hz	Max.: 264V Min.: 198V	1.85 / 1.85	0.081x2	1.48 / 1.48
GUF-100RD(H)3			3.49 / 3.49	0.16x2	2.79 / 2.79

1-2-2. Electrical characteristics of Outdoor unit

Symbols : MC : Max.Current
SC : Starting Current
RLC : Rated Load Current

Model	Unit Combination	Units				Compressor		FAN	RLC (A) (50 / 60Hz)	
		Hz	Volts	Voltage range	MCA(A)	Output (kW)	SC (A)	Output (kW)	Cooling	Heating
PUHY-HP200YHM-A(-BS)	-	50/60	380 400 415	Max : 456V Min : 342V	26.3	5.3	8	0.92	10.8/10.2/9.8	11.0/10.4/10.0
PUHY-HP250YHM-A(-BS)	-				31.5	6.7	8	0.92	15.2/14.5/14.0	15.0/14.3/13.8
PUHY-HP400YSHM-A(-BS)	PUHY-HP200YHM-A(-BS)				26.3	5.3	8	0.92	21.7/20.6/19.8	22.5/21.4/20.6
	PUHY-HP200YHM-A(-BS)				26.3	5.3	8	0.92		
PUHY-HP500YSHM-A(-BS)	PUHY-HP250YHM-A(-BS)				31.5	6.7	8	0.92	30.6/29.1/28.0	30.4/28.9/27.8
	PUHY-HP250YHM-A(-BS)				31.5	6.7	8	0.92		

1-3. Power cable specifications

Thickness of wire for main power supply, capacities of the switch and system impedance

	Model	Unit combination	Minimum wire thickness (mm^2)			Swtich (A)		Breaker for wiring (NFB) (A)	Breaker for current leakage	Minimum circuit ampacity (MCA) (A)	Max.Permissive System Impedance
			Main cable	Branch	Ground	Capacity	Fuse				
Outdoor unit	PUHY-HP200YHM-A		4.0	-	4.0	32	32	30	30A 100mA 0.1sec. or less	26.3	*1
	PUHY-HP250YHM-A		6.0	-	6.0	40	40	40	40A 100mA 0.1sec. or less	31.5	0.24Ω
Total operating current of the indoor unit	16A or less		1.5	1.5	1.5	16	16	20	20A 30mA 0.1sec. or less	-	(apply to IEC61000-3-3)
	25A or less		2.5	2.5	2.5	25	25	30	30A 30mA 0.1sec. or less	-	(apply to IEC61000-3-3)
	32A or less		4.0	4.0	4.0	32	32	40	40A 30mA 0.1sec. or less	-	(apply to IEC61000-3-3)

*1: Meets technical requirements of IEC61000-3-3

1. Use dedicated power supplies for the outdoor unit and indoor unit. Ensure OC and OS are wired individually.
2. Bear in mind ambient conditions (ambient temperature,direct sunlight, rain water,etc.) when proceeding with the wiring and connections.
3. The wire size is the minimum value for metal conduit wiring.
   If the voltage drops, use a wire that is one rank thicker in diameter. Make sure the power-supply voltage does not drop more than 10%.
4. Specific wiring requirements should adhere to the wiring regulations of the region.
5. Power supply cords of parts of appliances for outdoor use shall not be lighter than polychloroprene sheathed flexible cord (design 245 IEC57). For example, use wiring such as YZW.
6. A switch with at least 3 mm contact separation in each pole shall be provided by the Air Conditioner installer.

⚠WARNING

- Be sure to use specified wires for connections and ensure no external force is imparted to terminal connections. If connections are not fixed firmly, heating or fire may result.
- Be sure to use the appropriate type of overcurrent protection switch. Note that generated overcurrent may include some amount of direct current.

⚠CAUTION

- Some installation sites may require attachment of an earth leakage breaker for the inverter. If no earth leakage breaker is installed, there is a danger of electric shock.
- Do not use anything other than a breaker and fuse with the correct capacity. Using a fuse or wire of too large capacity may cause malfunction or fire.

Note

- This device is intended for the connection to a power supply system with a maximum permissible system impedance shown in the above table at the interface point (power service box) of the user's supply.
- The user must ensure that this device is connected only to a power supply system which fulfils the requirement above.
  If necessary, the user can ask the public power supply company for the system impedance at the interface point.
- This equipment complies with IEC 61000-3-12 provided that the short-circuit power Ssc is greater than or equal to Ssc(*2) at the interface point between the user's supply and the public system. It is the responsibility of the installer or user of the equipment to ensure, by consultation with the distribution network operator if necessary, that the equipment is connected only to a supply with a short-circuit power Ssc greater than or equal to Ssc(*2).

Ssc(*2)

Model	Ssc(MVA)
PUHY-HP200YHM	1.87
PUHY-HP250YHM	2.24

1-4. Power supply examples

The local standards and/or regulations is applicable at a higher priority.

1-4-1. PUHY-HP200, 250YHM

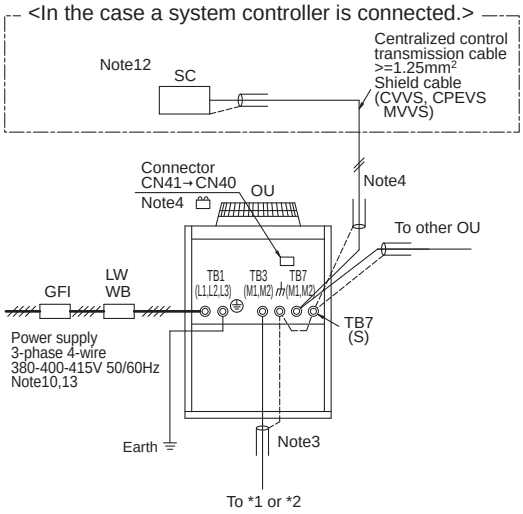

Note:
1 The transmission cable is not-polarity double-wire.
2 Symbol ◎ means a screw terminal for wiring.
3 The shield wire of transmission cable should be connected to the grounding terminal at Outdoor unit. All shield wire of M-Net transmission cable among Indoor units should be connected to the S terminal at Indoor unit or all shield wire should be connected together. The broken line at the scheme means shield wire.
4 When the Outdoor unit connected with system controller, power-supply to TB7 of the outdoor unit(s) is needed. The connector change from CN41 to CN40 at one of the outdoor units will enable the outdoor unit to supply power to TB7, or an extra power supplying unit PAC-SC51KUA should be used. The transmission cable (above 1.25mm^2, shielded, CVVS/CPEVS/MVVS) among Outdoor units and system controllers is called centralized control transmission cable. The shield wire of the centralized control transmission cable must be grounded at the Outdoor unit whose CN41 is changed to CN40.
5 MA R/C transmission cable (0.3-1.25mm^2) must be less than 200m in length, while ME R/C transmission cable (0.3-1.25mm^2) must be less than 10m in length. But transmission cable to the ME R/C can be extend using a M-NET cable (>=1.25mm^2) when the length is counted in the M-Net length. Both Compact MA and ME R/C transmission cables size 0.75~1.25mm^2 in thickness.
6 MA remote controller and ME remote controller should not be grouped together.
7 If using 1 or 2 (main/sub) MA remote controller to control more than 1 Indoor unit, use MA transmission cable to connect all the TB15 terminals of the Indoor units. It is called "Grouping".
If using 1 or 2 (main/sub) ME remote controller control more than 1 indoor unit, set address to Indoor unit and ME remote controller. For the method, refer to 2-4. "Address Setting".
8 Indoor board consumes power from TB3. The power balance should be considered according to System Design 2-3 "System configuration restrictions".
9 If Transmission booster is needed, be sure to connect the shield wires to the both sides to the booster.
10 The critical current for choosing power source equipment is approximate 1.4 times of total rated current of the Outdoor unit(s) or Indoor unit(s).
11 Numbers shown with ( ) indicates a diameter of the compact remote controller.
12 When System controller (SC) is connected to the system, turn the SW2-1 on.
13 The phases of electricity power must be confirmed to be right used. Phase-reverse, or phase-missing could break the controllers.

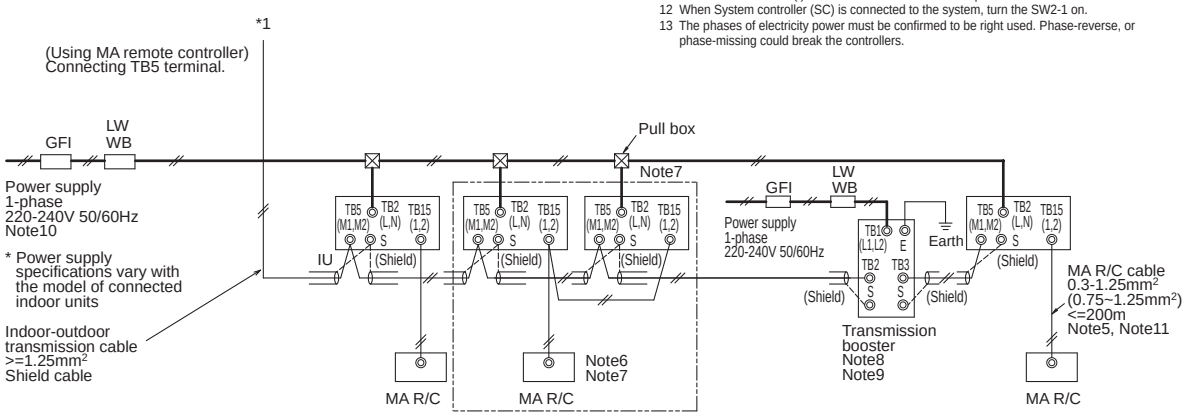

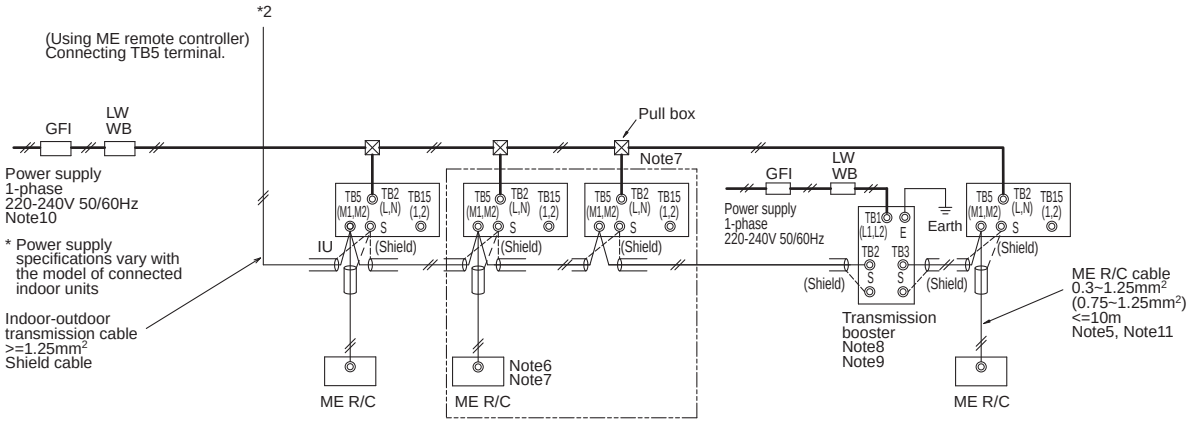

Symbol	
GFI	Ground-fault interrupter
LW	Local switch
BC	Breaker capacity
OCP	Over-current protector
WB	Wiring breaker
NFB	Non-fuse breaker
OU	Outdoor unit
IU	Indoor unit
SC	System controller
MA R/C	MA remote controller
ME R/C	ME remote controller

Model	Ground-fault interrupter *1, *2	Local switch		Wiring breaker	Minimum Wire thickness	
		BC <A>	OCP*3 <A>	(NFB) <A>	Power wire <mm2>	Earth wire <mm2>
PUHY-HP200YHM	30A 100mA 0.1sec. or less	32	32	30	4	4
PUHY-HP250YHM	40A 100mA 0.1sec. or less	40	40	40	6	6

*1 The Ground-fault interrupter should support Inverter circuit. (e.g. Mitsubishi Electric's NV-C series or equivalent).
*2 Ground-fault interrupter should combine using of local switch or wiring breaker.
*3 It shows data for B-type fuse of the breaker for current leakage.

The local standards and/or regulations is applicable at a higher priority.

1-4-2. PUHY-HP400,450YSHM

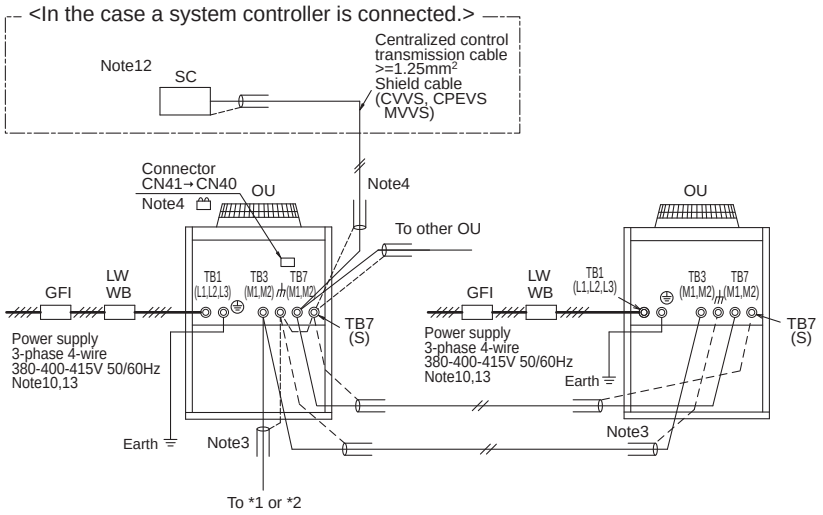

Note:
1 The transmission cable is not-polarity double-wire.
2 Symbol ◎ means a screw terminal for wiring.
3 The shield wire of transmission cable should be connected to the grounding terminal at Outdoor unit. All shield wire of M-Net transmission cable among Indoor units should be connected to the S terminal at Indoor unit or all shield wire should be connected together. The broken line at the scheme means shield wire.
4 When the Outdoor unit connected with system controller, power-supply to TB7 of the outdoor unit(s) is needed. The connector change from CN41 to CN40 at one of the outdoor units will enable the outdoor unit to supply power to TB7, or an extra power supplying unit PAC-SC51KUA should be used. The transmission cable (above 1.25mm^2, shielded, CVVS/CPEVS/MVVS) among Outdoor units and system controllers is called centralized control transmission cable. The shield wire of the centralized control transmission cable must be grounded at the Outdoor unit whose CN41 is changed to CN40.
5 MA R/C transmission cable (0.3-1.25mm^2) must be less than 200m in length, while ME R/C transmission cable (0.3-1.25mm^2) must be less than 10m in length. But transmission cable to the ME R/C can be extend using a M-NET cable (>=1.25mm^2) when the length is counted in the M-Net length. Both Compact MA and ME R/C transmission cables size 0.75~1.25mm^2 in thickness.
6 MA remote controller and ME remote controller should not be grouped together.
7 If using 1 or 2 (main/sub) MA remote controller to control more than 1 Indoor unit, use MA transmission cable to connect all the TB15 terminals of the Indoor units. It is called "Grouping".
If using 1 or 2 (main/sub) ME remote controller control more than 1 indoor unit, set address to Indoor unit and ME remote controller. For the method, refer to 2-4. "Address Setting".
8 Indoor board consumes power from TB3. The power balance should be considered according to System Design 2-3 "System configuration restrictions".
9 If Transmission booster is needed, be sure to connect the shield wires to the both sides to the booster.
10 The critical current for choosing power source equipment is approximate 1.4 times of total rated current of the Outdoor unit(s) or Indoor unit(s).
11 Numbers shown with ( ) indicates a diameter of the compact remote controller.
12 When System controller (SC) is connected to the system, turn the SW2-1 on.
13. The phases of electricity power must be confirmed to be right used. Phase-reverse, or phase-missing could break the controllers.

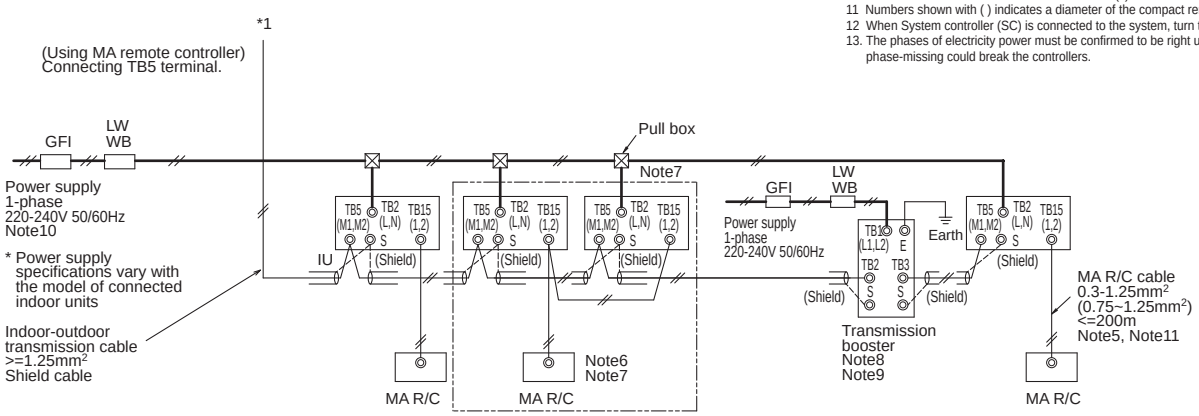

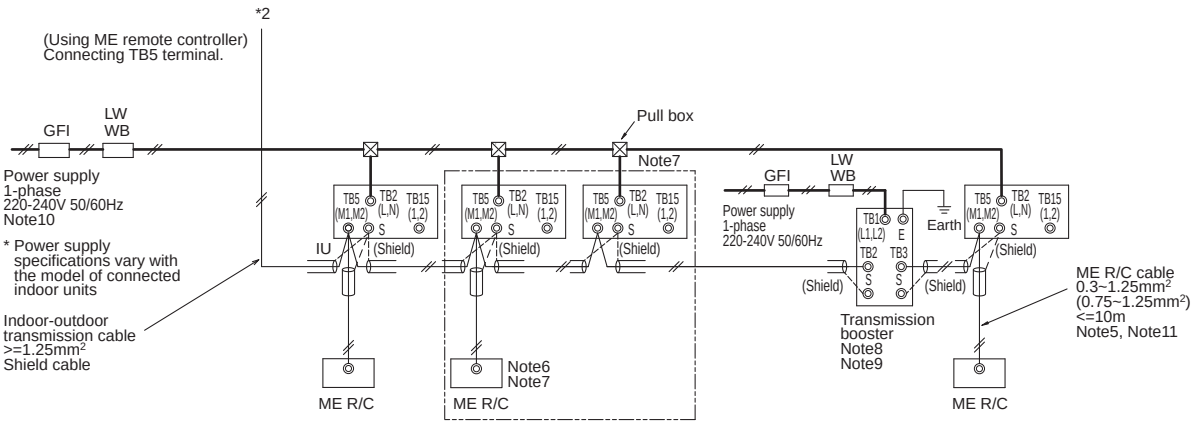

Symbol	
GFI	Ground-fault interrupter
LW	Local switch
BC	Breaker capacity
OCP	Over-current protector
WB	Wiring breaker
NFB	Non-fuse breaker
OU	Outdoor unit
IU	Indoor unit
SC	System controller
MA R/C	MA remote controller
ME R/C	ME remote controller

Model	Ground-fault interrupter *1, *2	Local switch		Wiring breaker	Minimum Wire thickness	
		BC <A>	OCP*3 <A>	(NFB) <A>	Power wire <mm2>	Earth wire <mm2>
PUHY-HP200YHM	30A 100mA 0.1sec. or less	32	32	30	4	4
PUHY-HP250YHM	40A 100mA 0.1sec. or less	40	40	40	6	6

*1 The Ground-fault interrupter should support Inverter circuit. (e.g. Mitsubishi Electric's NV-C series or equivalent).
*2 Ground-fault interrupter should combine using of local switch or wiring breaker.
*3 It shows data for B-type fuse of the breaker for current leakage.

2-1. Transmission cable length limitation

2-1-1. Using MA Remote controller

Long transmission cable causes voltage down, therefore, the length limitation should be obeyed to secure proper transmission.

Max. length via Outdoor (M-NET cable)	L1+L2+L3+L4, L1+L2+L6+L7, L3+L4+L6+L7	<=500m[1640ft.]	1.25mm^2 [AWG16] or thicker
Max. length to Outdoor (M-NET cable)	L1+L8, L3+L4, L6, L2+L6+L8, L7	<=200m[656ft.]	1.25mm^2 [AWG16] or thicker
Max. length from MA to Indoor	a1+a2, a1+a2+a3+a4	<=200m[656ft.]	0.3-1.25 mm^2 [AWG22-16]
24VDC to AG-150A	n	<=50m[164ft.]	0.75-2.0 mm^2 [AWG18-14]

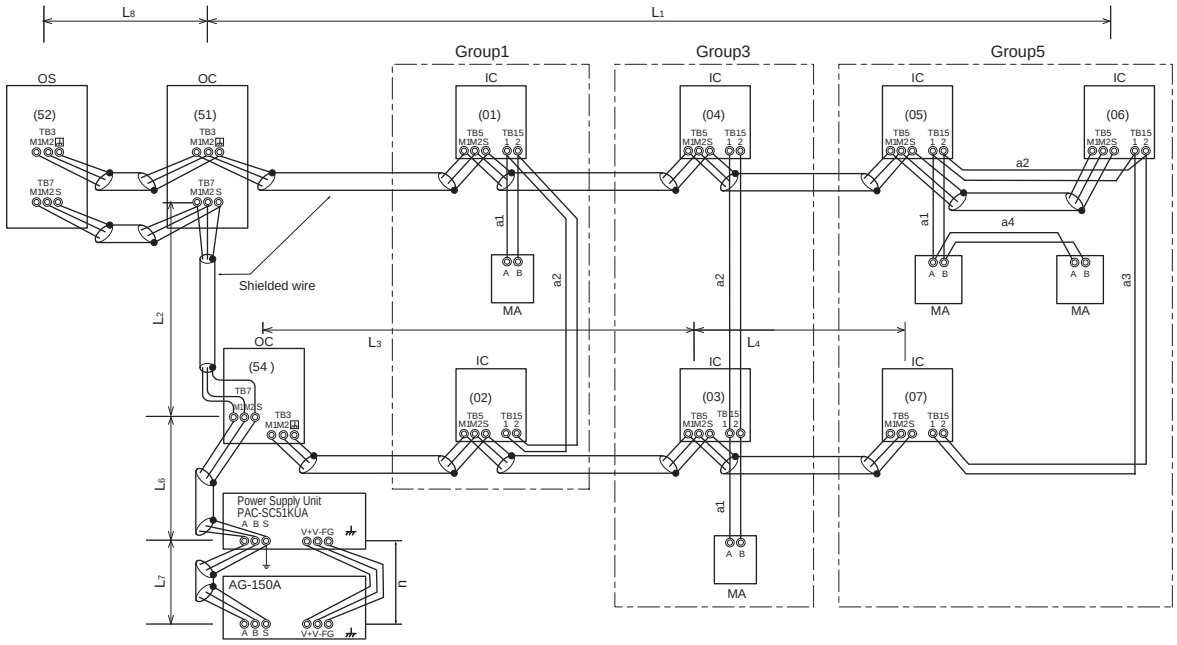

OC, OS : Outdoor unit controller; IC: Indoor unit controller; MA: MA remote controller

2-1-2. Using ME Remote controller

Long transmission cable causes voltage down, therefore, the length limitation should be obeyed to secure proper transmission.

Max. length via Outdoor (M-NET cable)	L1+L2+L3+L4, L1+L2+L6+L7,L1+L2+L3+L5, L3+L4+L6+L7	<=500m[1640ft.]	1.25mm^2 [AWG16] or thicker
Max. length to Outdoor (M-NET cable)	L1+L8, L3+L4, L6, L2+L6+L8, L7, L3+L5	<=200m[656ft.]	1.25mm^2 [AWG16] or thicker
Max. length from ME to Indoor	e1, e2+e3, e4	<=10m[32ft.]*1	0.3-1.25 mm^2 [AWG22-16] *1
24VDC to AG-150A	n	<=50m[164ft.]	0.75-2.0 mm^2 [AWG18-14]

*1. If the length from ME to Indoor exceed 10m, use 1.25 mm^2 [AWG16] shielded cable, but the total length should be counted into Max. length via Outdoor.

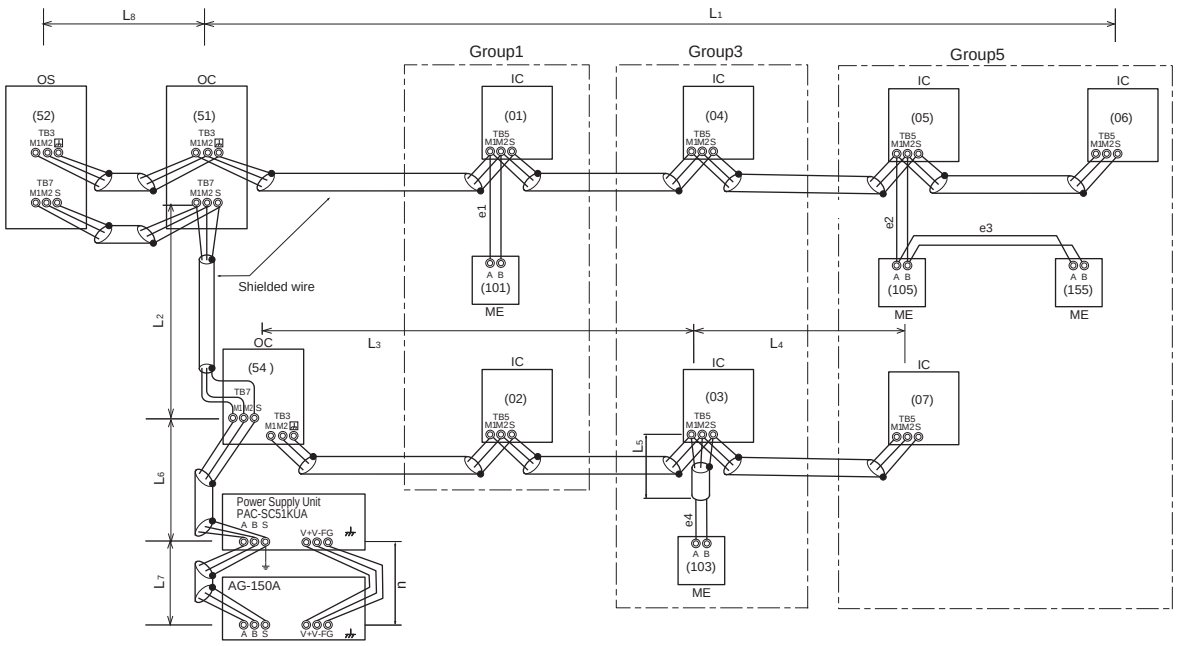

OC, OS : Outdoor unit controller; IC: Indoor unit controller; ME: ME remote controller

2-2. Transmission cable specifications

	Transmission cables (Li)	ME Remote controller cables	MA Remote controller cables
Type of cable	Shielding wire (2-core) CVVS, CPEVS or MVVS	Sheathed 2-core cable (unshielded) CVV	
Cable size	More than 1.25mm^2 [AWG16]	0.3～1.25mm^2 [AWG22～16] (0.75～1.25mm^2 [AWG18～16])*1	0.3～1.25mm^2 [AWG22～16] (0.75～1.25mm^2 [AWG18～16])*1
Remarks	—	When 10m [32ft] is exceeded, use cables with the same specification as transmission cables.	Max length : 200m [656ft]

*1 Connected with simple remote controller.

CVVS, MVVS : PVC insulated PVC jacketed shielded control cable
CPEVS : PE insulated PVC jacketed shielded communication cable
CVV : PV insulated PVC sheathed control cable

System HP

2-3. System configuration restrictions

2-3-1. Common restrictions for the CITYMULTI system

For each Outdoor unit, the maximum connectable quantity of Indoor unit is specified at its Specifications table.

A) 1 Group of Indoor units can have 1-16 Indoor units;
*OA processing unit GUF-RD(H) is considered as Indoor unit.

B) Maximum 2 remote controllers for 1 Group; (MA/ME remote controllers cannot be present together in 1group.)

C) 1 LOSSNAY unit can interlock maximum 16 Indoor units; 1 Indoor unit can interlock only 1 LOSSNAY unit.

D) Maximum 3 System controllers are connectable when connecting to TB3 of the Outdoor unit.

E) Maximum 3 System controllers are connectable when connecting to TB7 of the Outdoor unit, if the transmission power is supplied by the Outdoor unit.

F) 4 System controllers or more are connectable when connecting to TB7 of the Outdoor unit, if the transmission power is supplied by the power supply unit PAC-SC51KUA. Details refer to 2-3-3-C.
*System controller connected as described in D) and E) would have a risk that the failure of connected Outdoor unit would stop power supply to the System controller.

2-3-2. Ensuring proper communication power for M-NET

In order to ensure proper communication among Outdoor unit, Indoor unit, LOSSNAY, and OA processing unit GUF-RD(H), and Controllers, the transmission power situation for the M-NET should be observed. In some cases, Transmission booster should be used. Taking the power consumption of Indoor unit sized P20-P140 as 1, the equivalent power consumption or supply of others are listed at Table 2-3-1 and Table 2-3-2.

Table 2-3-1 The equivalent power consumption

Indoor, OA unit	Indoor unit	BC controller	MA RC. LOSSNAY	ME Remote Contr.	Timers, System Contr.		ON/OFF Contr.	MN Conrerter	
Sized P15-P140 GUF-50, 100	Sized P200,P250	CMB	PAR-21MAA PAC-YT51CRA(B) PAR-FA32MA LGH-RX-E PZ-60DR-E	PAR-F27MEA PAC-SE51CRA PZ-52SF-E	PAC-SC30GRA PAC-SF44SRA PAC-YT34STA AG-150A	GB-50A	PAC-YT40ANRA	CMS -MNF-B	CMS -MNG-E
1	7	2	0	1/4	1/2	3	1	1/2	2

*RC : Remote Controller

Table 2-3-2 The equivalent power supply

Transmission Booster	Power supply unit	Expansion controller	BM ADAPTER	Outdoor unit	Outdoor unit
PAC-SF46EPA	PAC-SC51KUA	PAC-YG50ECA	BAC-HD150	Connector TB3 and TB7 total *	Connector TB7 only
25	5	6	6	32	6

*If PAC-SC51KUA is used to supply power at TB7 side, no power supply need from Outdoor unit at TB7, Connector TB3 itself will therefore have 32. Not applicable to the PUMY model.

With the equivalent power consumption values in Table 2-3-1 and Table 2-3-2, PAC-SF46EPA can be designed into the air-conditioner system to ensure proper system communication according to 2-3-2-A, B, C.

2-3-2-A) Firstly, count from TB3 at TB3 side the total quantity of Indoor units, OA process units and ME remote controller, Timers and System controllers. If the total quantity reaches 40, a PAC-SF46EPA should be set. In this case, Indoor unit sized P200, 250 is counted as 7 Indoor units, but MA remote controller(s), LOSSNAY, PZ-60DR-E is NOT counted.

2-3-2-B) Secondly, count from TB7 side to TB3 side the total transmission power consumption. If the total power consumption reaches 32, a PAC-SF46EPAshould be set. Yet, if a PAC-SC51KUAis used to supply power at TB7 side, count from TB3 side only.

2-3-2-C) Thirdly, count from TB7 at TB7 side the total transmission power consumption, If the total power consumption reaches 6, a PAC-SF46EPA should be set.

■ System example

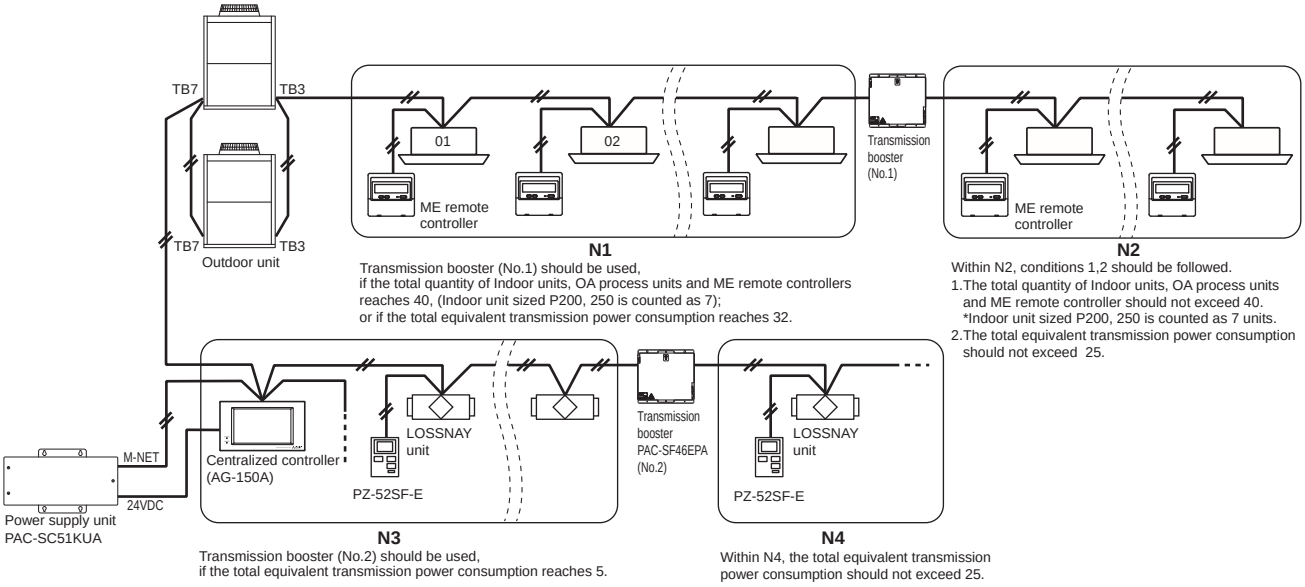

2-3-3. Ensuring proper power supply to System controller

The power to System controller (excluding LMAP02-E) is supplied via M-NET transmission line. M-NET transmission line at TB7 side is called Centralized control transmission line while one at TB3 side is called Indoor-Outdoor transmission line. There are 3 ways to supply power to the System controller .
A) Connecting to TB3 of the Outdoor unit and receiving power from the Outdoor unit.
B) Connecting to TB7 of the Outdoor unit and receiving power from the Outdoor unit.
C) Connecting to TB7 of the Outdoor unit but receiving power from power supply unit PAC-SC51KUA.

2-3-3-A. When connecting to TB3 of the Outdoor unit and receiving power from the Outdoor unit.

Maximum 3 System controllers can be connected to TB3.
If there is more than 1 Outdoor unit, it is necessary to replace power supply switch connector CN41 with CN40 on one Outdoor unit.

Fig. 2-3-3-A

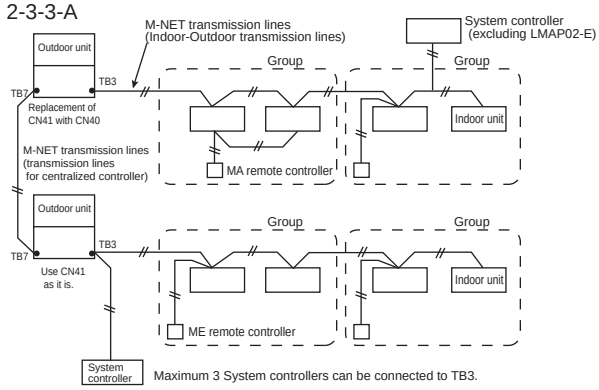

2-3-3-B. When connecting to TB7 of the Outdoor unit and receiving power from the Outdoor unit.

Maximum 3 System controllers can be connected to TB7 and receiving power from the Outdoor unit.
It is necessary to replace power supply switch connector CN41 with CN40 on one Outdoor unit.

Fig. 2-3-3-B

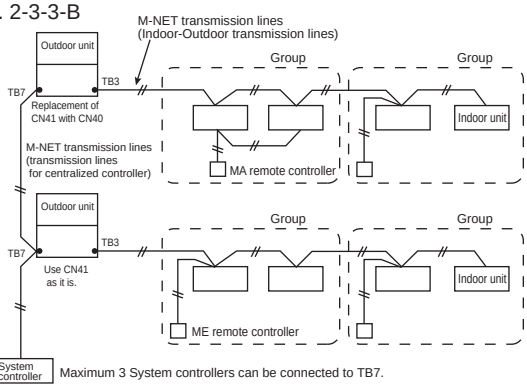

2-3-3-C. When connecting to TB7 of the Outdoor unit but receiving power from PAC-SC51KUA.

When using PAC-SC51KUA to supply transmission power, the power supply connector CN41 on the Outdoor units should be kept as it is. It is also a factory setting.
1 PAC-SC51KUA supports maximum 1 AG-150A unit due to the limited power 24VDC at its TB3.
However, 1 PAC-SC51KUA supplies transmission power at its TB2 equal to 5 Indoor units, which is referable at Table 2-3-2.
If PZ-52SF-E, Timers, System controller, ON/OFF controller connected to TB7 consume transmission power more than 5 (Indoor units), Transmission booster PAC-SF46EPA is needed. PAC-SF46EPA supplies transmission power equal to 25 Indoor units.

Fig. 2-3-3-C

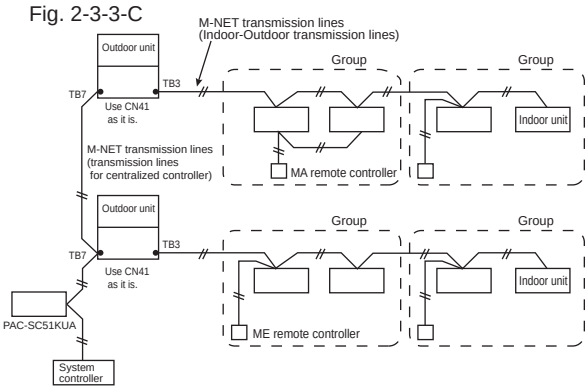

⚠ CAUTION

AG-150A*1 is recommended to connect to TB7 because it performs back-up to a number of data.
In an air conditioner system has more than 1 Outdoor units, AG-150A receiving transmission power through TB7 on one of the Outdoor units would have a risk that the connected Outdoor unit failure would stop power supply to AG-150A, and disrupt the whole system.
When applying apportioned electric power function, AG-150A is necessary to connected to TB7 and has its own power supply unit PAC-SC51KUA.*2
*1: AG-150A is an example model of system controllers.
*2: Power supply unit PAC-SC51KUA is for AG-150A.

2-3-4. Power supply to LM adapter LMAP02-E

1-phase 220-240V AC power supply is needed.
The power supply unit PAC-SC51KUA is not necessary when connecting only the LMAP02-E. Yet, make sure to change the power supply changeover connector CN41 to CN40 on the LM adapter.

2-3-5. Power supply to expansion controller

1-phase 100-240VAC power supply is needed.
The power supply unit PAC-SC51KUA is not necessary.
The expansion controller supplies power through TB3, which equals 6 indoor units. (refer to Table 2-3-2)

2-3-6. Power supply to BM ADAPTER

1-phase 100-240VAC power supply is needed.
The power supply unit PAC-SC51KUA is not necessary when only BM ADAPTER is connected.
Yet, make sure to move the power jumper from CN41 to CN40 on the BM ADAPTER.

2-4. Address setting

2-4-1. Switch operation

In order to constitute CITY MULTI in a complete system, switch operation for setting the unit address No. and connection No. is required.

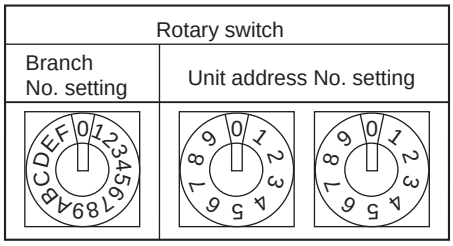

① Address No. of outdoor unit, indoor unit and remote controller.
The address No. is set at the address setting board.
In the case of R2 system, it is necessary to set the same No. at the branch No. switch of indoor unit as that of the BC controller connected. (When connecting two or more branches, use the lowest branch No.)

② Caution for switch operations

- Be sure to shut off power source before switch setting. If operated with power source on, switch can not operate properly.
- No units with identical unit address shall exist in one whole air conditioner system. If set erroneously, the system can not operate.

③ MA remote controller

- When connecting only one remote controller to one group, it is always the main remote controller.
  When connecting two remote controllers to one group, set one remote controller as the main remote controller and the other as the sub remote controller.
- The factory setting is "Main".

PAR-21MAA
The MA remote controller does not have the switches listed above.
Refer to the installation manual for the function setting.

PAC-YT51CRB

Setting the dip switches

There are switches on the front of the remote controller. Remote controller Main/Sub and other function settings are performed using these switches. Ordinarily, only change the Main/Sub setting of SW1.
(The factory settings are all "ON".)

SW No	SW contents Main	ON	OFF	Comment
1	Remote controller Main/Sub setting	Main	Sub	Set one of the two remote controllers at one group to "Main"
2	Temperature display units setting	Celsius	Fahrenheit	When the temperature is displayed in [Fahrenheit], set to "No".
3	Cooling/heating display in AUTO mode	Yes	No	When you do not want to display "Cooling" and "Heating" in the Auto mode, set to "No".

System HP

2-4-2. Rule of setting address

Unit		Address setting	Example	Note
Indoor unit		01 ~ 50	10 1	Use the most recent address within the same group of indoor units. Make the indoor units address connected to the BC controller (Sub) larger than the indoor units address connected to the BC controller (Main). If applicable, set the sub BC controllers in an PURY system in the following order: (1) Indoor unit to be connected to the BC controller (Main) (2) Indoor unit to be connected to the BC controller (No.1 Sub) (3) Indoor unit to be connected to the BC controller (No.2 Sub) Set the address so that (1)<(2)<(3)
Outdoor unit		51 ~ 99, 100 (Note1)	10 1	The smallest address of indoor unit in same refrigerant system + 50 Assign sequential address numbers to the outdoor units in one refrigerant circuit system. OC, OS1 and OS2 are automatically detected. (Note 2) ∗ Please reset one of them to an address between 51 and 99 when two addresses overlap. ∗ The address automatically becomes "100" if it is set as "01~ 50"
BC controller (Main)		52 ~ 99, 100	10 1	The address of outdoor unit + 1 ∗ Please reset one of them to an address between 51 and 99 when two addresses overlap. ∗ The address automatically becomes "100" if it is set as "01~ 50"
BC controller (Sub)		52 ~ 99, 100	10 1	Lowest address within the indoor units connected to the BC controller (Sub) plus 50.
Local remote controller	ME, LOSSNAY Remote controller (Main)	101 ~ 150	1 Fixed 10 1	The smallest address of indoor unit in the group + 100 ∗ The place of "100" is fixed to "1"
Local remote controller	ME, LOSSNAY Remote controller (Sub)	151 ~ 199, 200	1 Fixed 10 1	The address of main remote controller + 50 ∗ The address automatically becomes "200" if it is set as "00"
System controller	Group remote controller	201 ~ 250	2 Fixed 10 1	The smallest group No. to be managed + 200
System controller	System remote controller	000, 201 ~ 250	100 10 1	
System controller	ON/OFF remote controller	000, 201 ~ 250	100 10 1	The smallest group No. to be managed + 200 ∗ The smallest group No. to be managed is changeable.
System controller	AG-150A GB-50A	000, 201 ~ 250	0,2 0~5 0~9 100 10 1	
System controller	PAC-YG50ECA	000, 201 ~ 250	0,2 0~5 0~9 100 10 1	∗ Settings are made on the initial screen of AG-150A.
System controller	BAC-HD150	000, 201 ~ 250	0,2 0~5 0~9 100 10 1	∗ Settings are made with setting tool of BM ADAPTER.
System controller	LMAP02-E	201 ~ 250	2 Fixed 10 1	

Note1: To set the address to "100", set it to "50"
Note2: Outdoor units OC, OS1 and OS2 in one refrigerant circuit system are automatically detected.
OC, OS1 and OS2 are ranked in descending order of capacity. If units are the same capacity, they are ranked in ascending order of their address.

2-4-3. System examples

Factory setting

Original switch setting of the outdoors, indoors, controllers, LMAP and BM ADAPTER at shipment is as follows.

- Outdoor unit : Address: 00, CN41: U (Jumper), DipSW2-1: OFF
- Indoor unit : Address: 00
- ME remote controller : Address: 101
- LMAP : Address: 247, CN41: U (Jumper), DipSW1-2: OFF
- BM ADAPTER : Address: 00

Setting at the site

- DipSW2-1(Outdoor) : When the System Controller is used, all the Dip SW2-1 at the outdoor units should be set to "ON". * Dip SW2-1 remains OFF when only LMAP02-E is used.
- DipSW1-2(LMAP) : When the LMAP is used together with System Controller, DipSW1-2 at the LMAP should be set to "ON".
- CN40/CN41 : Change jumper from CN41 to CN 40 at outdoor control board will activate central transmission power supply to TB7;
  (Change jumper at only one outdoor unit when activating the transmission power supply without using a power supply unit.)
  Change jumper from CN41 to CN 40 at LMAP will activate transmission power supply to LMAP itself;
  Power supply unit is recommended to use for a system having more than 1 outdoor unit, because the central transmission power supply from TB7 of one of outdoor units is risking that the outdoor unit failure may let down the whole system controller system.

2-4-3-1. MA remote controller, Single-refrigerant-system, No System Controller

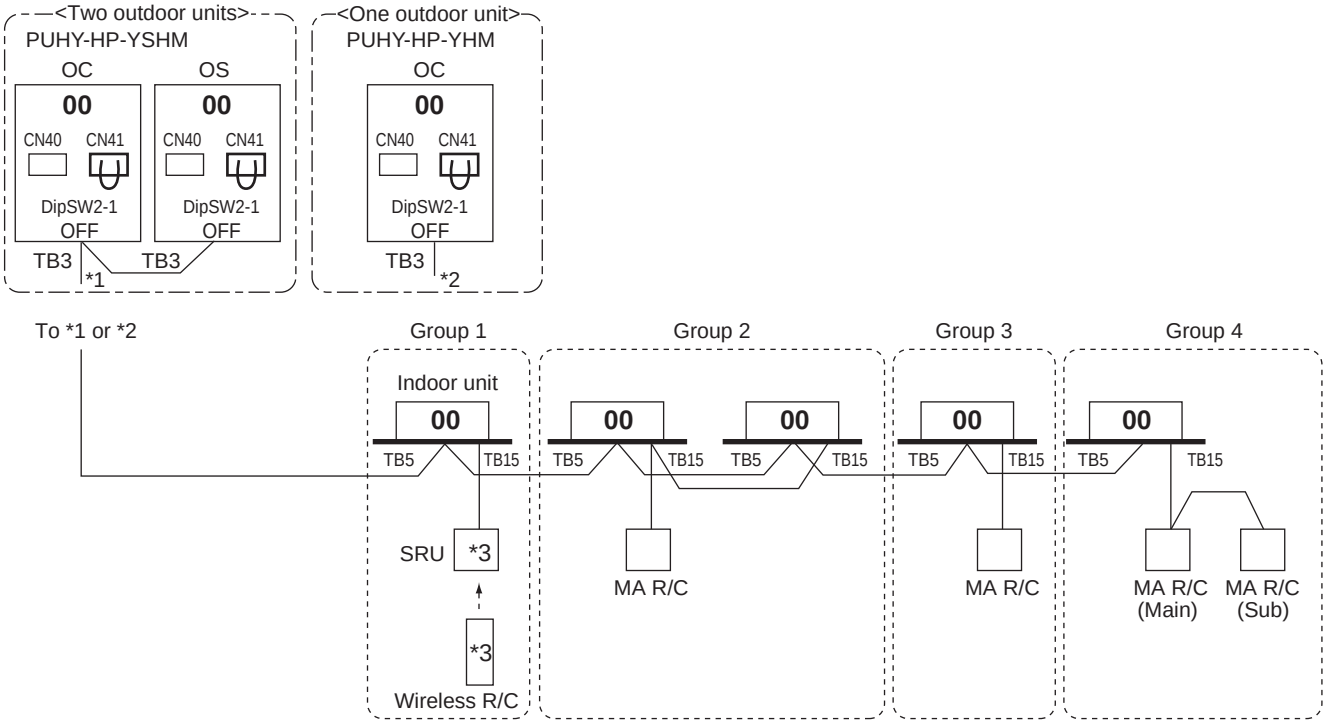

*3 For Wireless R/C and Signal receiver unit (SRU), channel 1, 2 and 3 are selectable and should be set to same channel.

NOTE:
1. Outdoor units OC and OS in one refrigerant circuit system are automatically detected.
   OC and OS are ranked in descending order of capacity. If units are the same capacity, they are ranked in ascending order of their address.
2. No address setting is needed.
3. For a system having more than 16 indoor unit, confirm the need of Booster at **2-3 "System configuration restrictions".**

2-4-3-2. MA remote controller, Single-refrigerant-system, System Controller

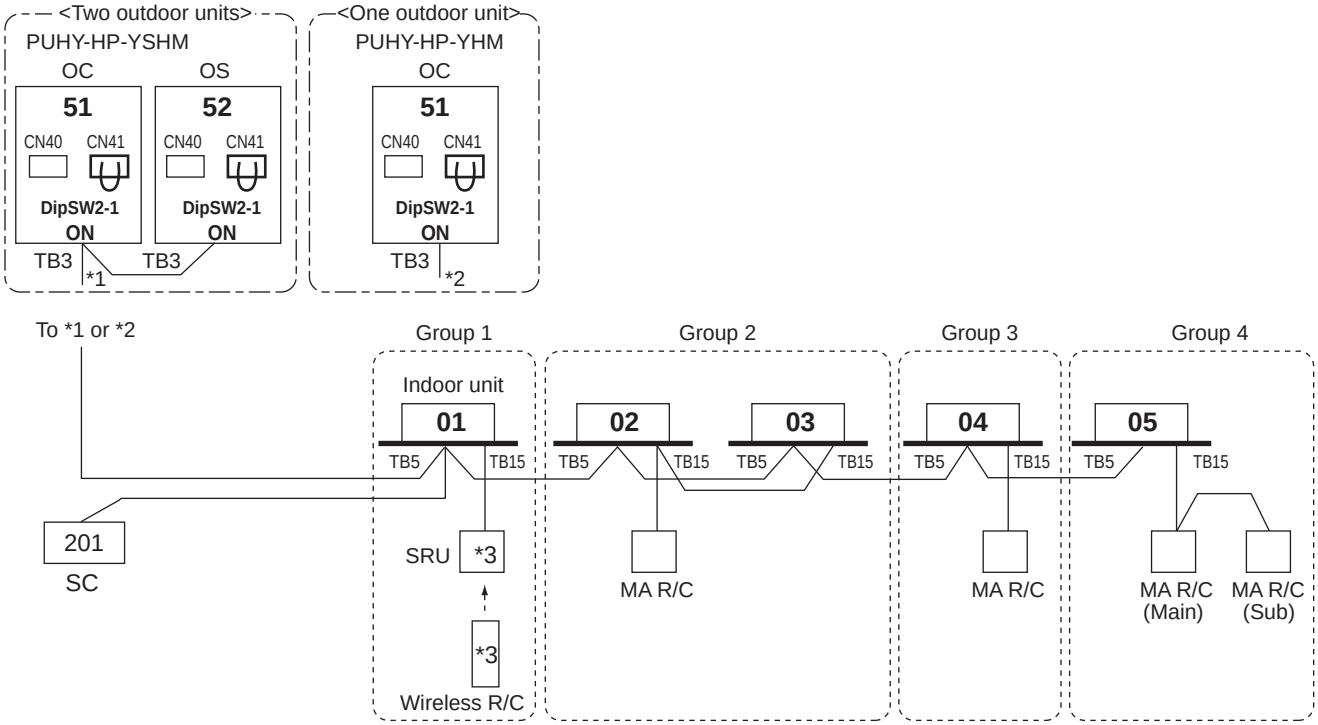

*3 For Wireless R/C and Signal receiver unit (SRU), channel 1, 2 and 3 are selectable and should be set to same channel.

*SC can be connected to TB3 side or TB7 side;
Should SC connected to TB7 side, change Jumper from CN41 to CN40 at the Outdoor unit module so as to supply power to the SC.

NOTE:

1. Outdoor units OC and OS in one refrigerant circuit system are automatically detected.
   OC and OS are ranked in descending order of capacity. If units are the same capacity, they are ranked in ascending order of their address.
2. Address should be set to Indoor units and centralized controller.
3. For a system having more than 16 indoor unit, confirm the need of Booster at **2-3 "System configuration restrictions".**

2-4-3-3. MA remote controller, Multi-refrigerant-system, System Controller at TB7/TB3 side, Booster for long M-NET wiring

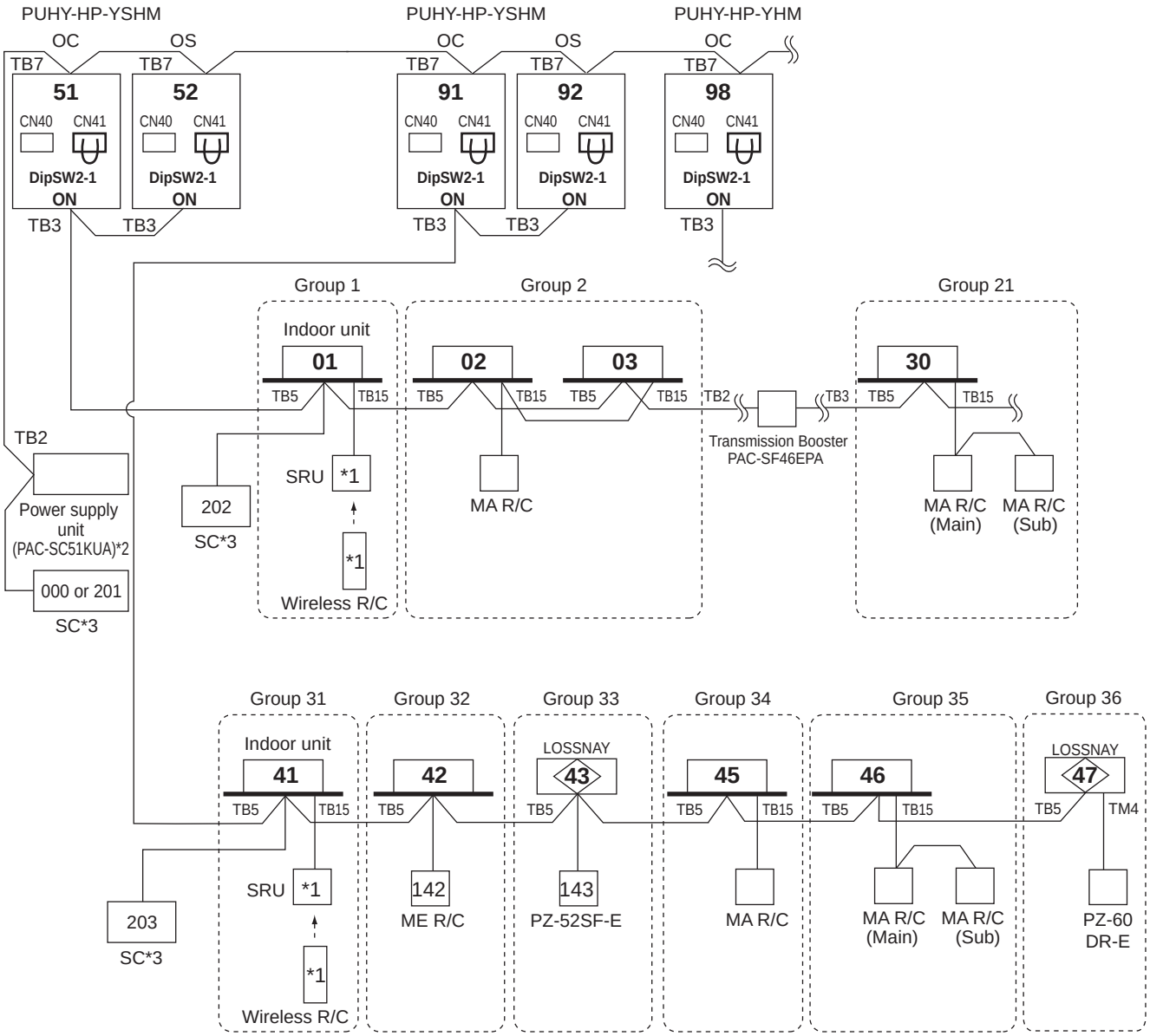

*1 For Wireless R/C and Signal receiver unit (SRU), channel 1, 2 and 3 are selectable and should be set to same channel.

*2 System controller should connect to TB7 at Outdoor and use power supply unit together in Multi-Refrigerant-System.
For AG-150A, 24V DC should be used with the PAC-SC51KUA.

*3 When multiple system controllers are connected in the system, set the controller with more functions than others as a "main" controller and others as "sub".
Make the setting to only one of the system controllers for "prohibition of operation from local remote controller".

NOTE:

1. Outdoor units OC and OS in one refrigerant circuit system are automatically detected.
OC and OS are ranked in descending order of capacity. If units are the same capacity, they are ranked in ascending order of their address.
2. Address should be set to Indoor units, LOSSNAY and centralized controller.
3. M-NET power is supplied by the Outdoor unit at TB3, while Indoor unit and ME remote controller consume the M-NET power for transmission use. The power balance is needed to consider for long M-NET wiring. Details refer to **2-3 "System configuration restrictions".**

2-4-3-4. ME remote controller, Single-refrigerant-system, No system controller

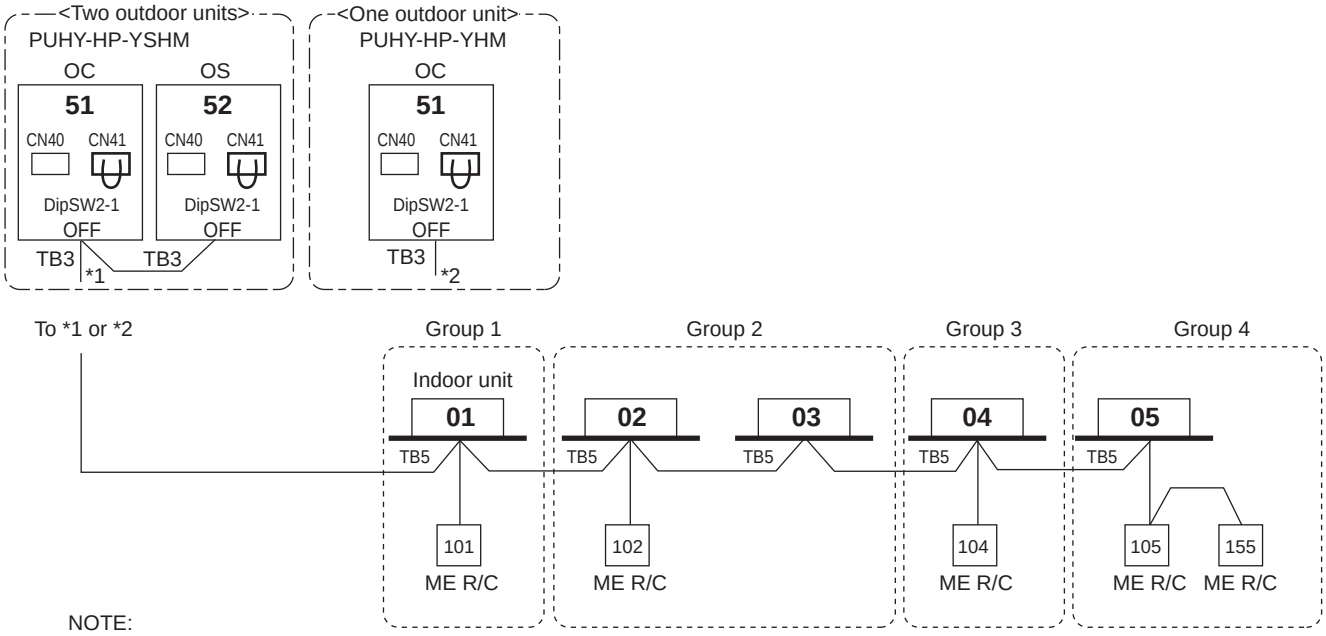

NOTE:

1. Outdoor units OC and OS in one refrigerant circuit system are automatically detected.
   OC and OS are ranked in descending order of capacity. If units are the same capacity, they are ranked in ascending order of their address.
2. Address should be set to Indoor units, system controller and ME remote controllers.
3. M-NET power is supplied by the Outdoor unit at TB3, while Indoor unit and ME RC consume the M-NET power for transmission use. The power balance is needed to consider for long M-NET wiring. Details refer to **2-3 "System configuration restrictions".**

2-4-3-5. ME remote controller, Single-refrigerant-system, System controller, LOSSNAY

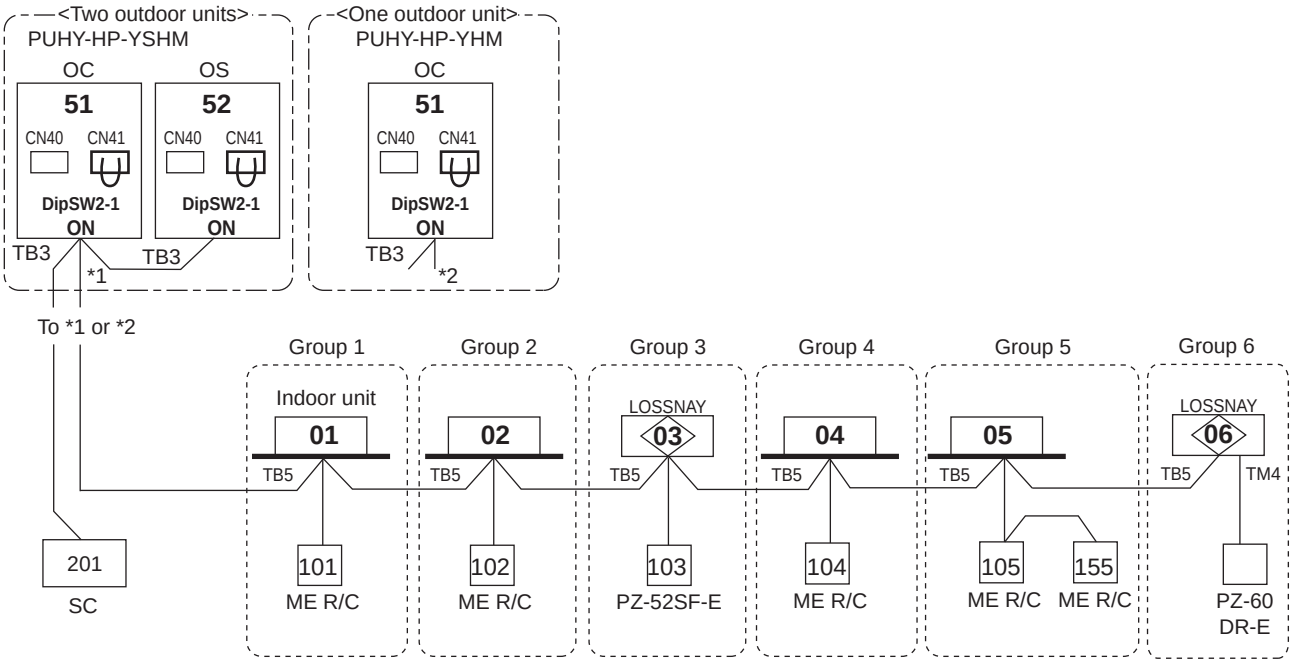

*SC can be connected to TB3 side or TB7 side;
Should SC connected to TB7 side, change Jumper from CN41 to CN40 at the Outdoor unit module so as to supply power to the SC.

NOTE:

1. Outdoor units OC and OS in one refrigerant circuit system are automatically detected.
   OC and OS are ranked in descending order of capacity. If units are the same capacity, they are ranked in ascending order of their address.
2. Address should be set to Indoor units, LOSSNAY centralized controller, ME remote controllers.
3. For a system having more than 16 indoor unit, confirm the need of Booster at **2-3 "System configuration restrictions".**

2-4-3-6. ME remote controller, Multi-refrigerant-system, System Controller at TB 7side, LOSSNAY, Booster for long M-NET wiring

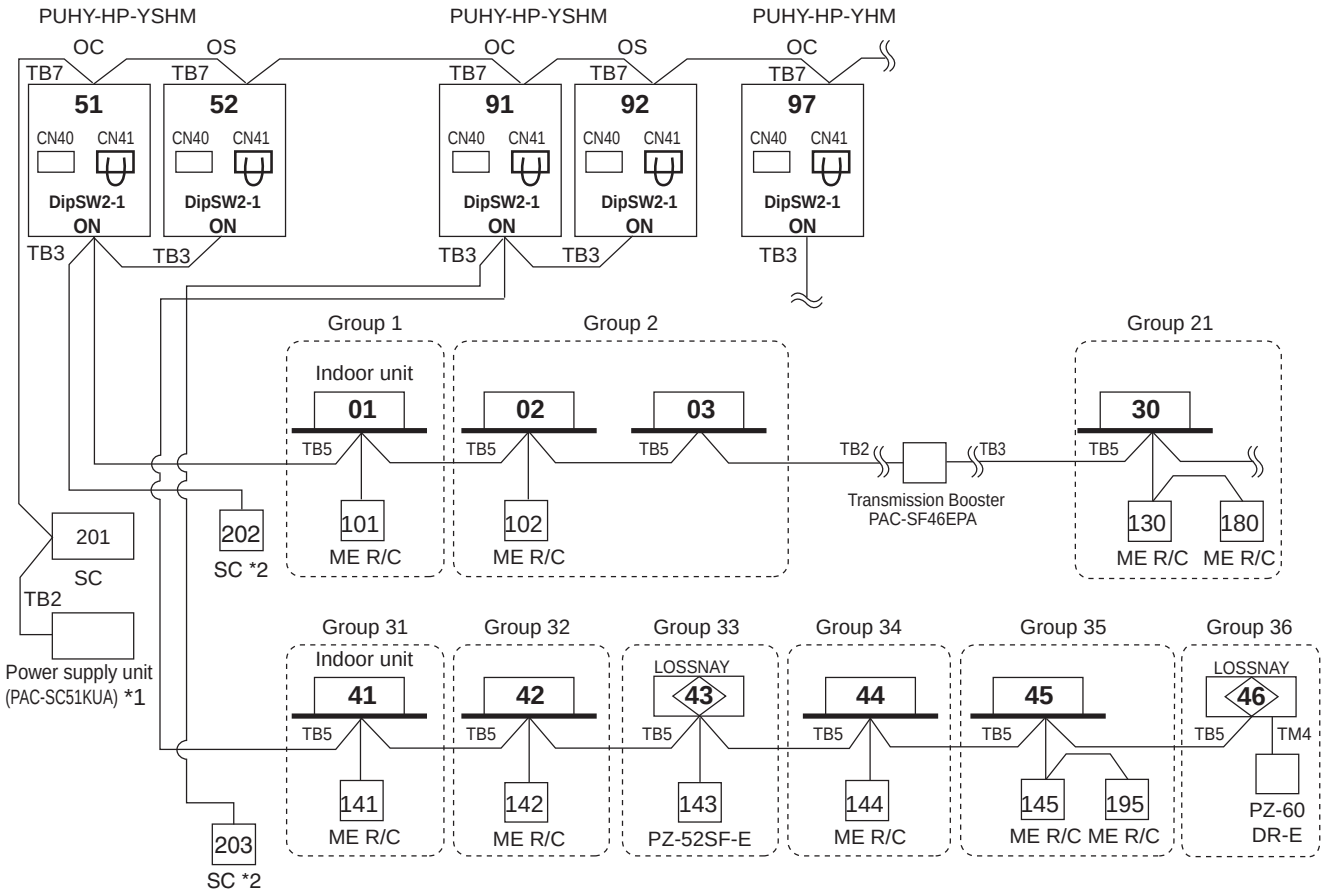

*1 System controller should connect to TB7 at Outdoor and use power supply unit together in Multi-Refrigerant-System.

*2 When multiple system controllers are connected in the system, set the controller with more functions than others as a "main" controller and others as "sub".
Make the setting to only one of the system controllers for "prohibition of operation from local remote controller".

NOTE:

1. Outdoor units OC and OS in one refrigerant circuit system are automatically detected.
   OC and OS are ranked in descending order of capacity. If units are the same capacity, they are ranked in ascending order of their address.
2. M-NET power is supplied by the Outdoor unit at TB3, while Indoor unit and ME remote controller consume the M-NET power for transmission use. The power balance is needed to consider for long M-NET wiring. Details refer to **2-3 "System configuration restrictions".**

System HP

2-4-3-7. ME remote controller, Multi-refrigerant-system, No Power supply unit

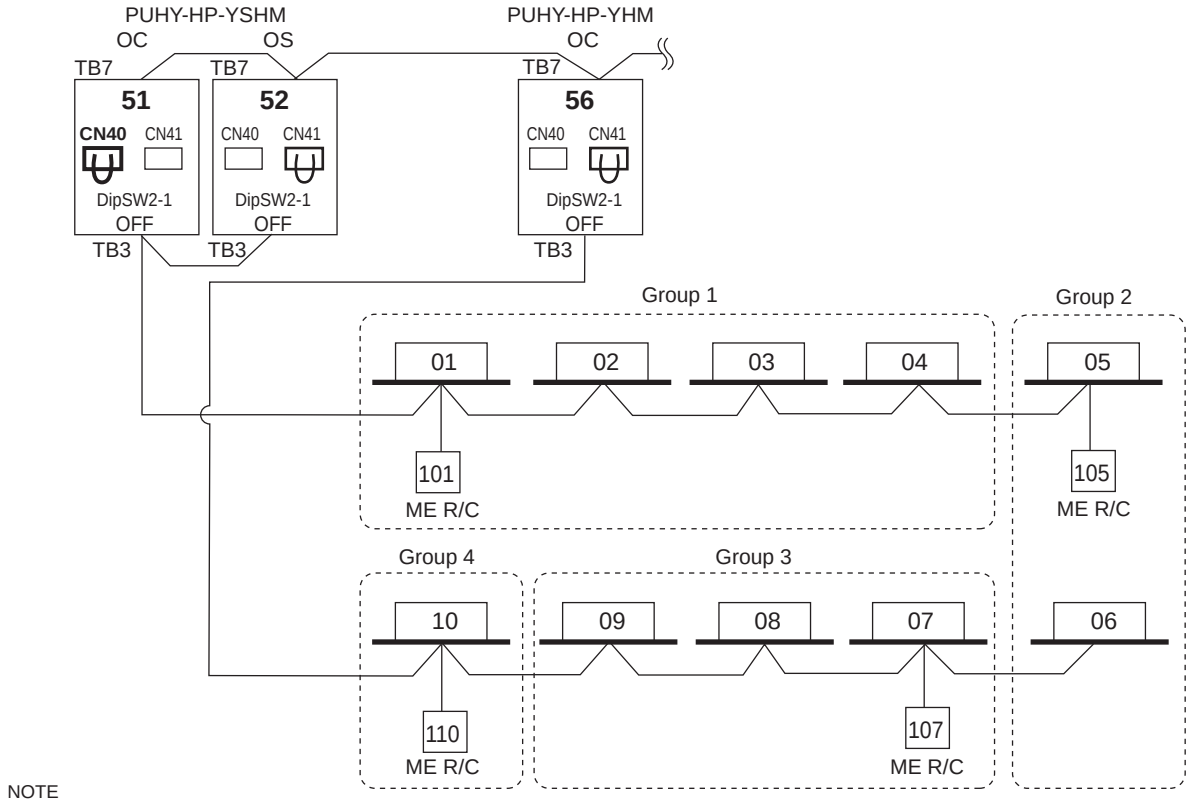

NOTE
- It is necessary to change the connecter to CN40 on the outdoor unit control board (only one outdoor unit) when the group is set between other refrigerant systems.
- It is necessary to set on the remote controller by manual when group sets on the different refrigerant system. Please refer to remote controller installation manual.

2-4-3-8. ME remote controller, Multi-refrigerant-system, System Controller at TB7 side, No Power sypply unit

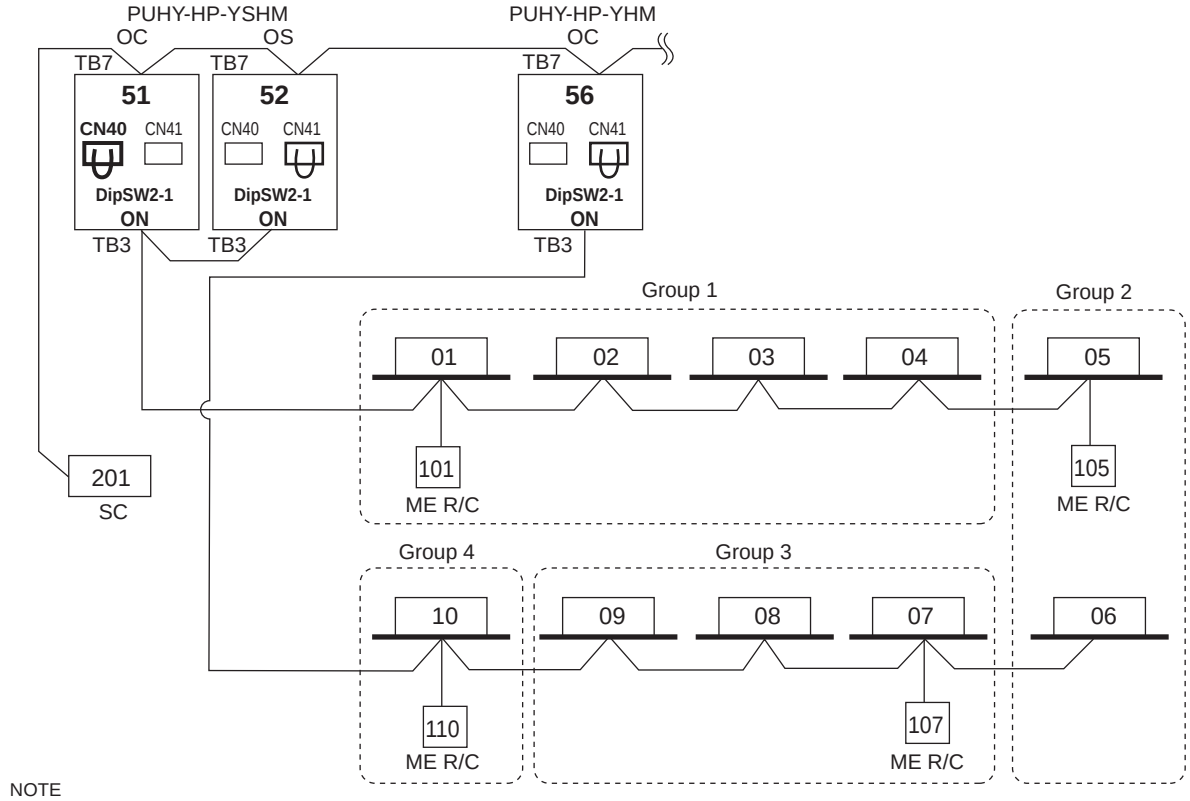

NOTE
- It is necessary to change the connecter to CN40 on the outdoor unit control board (only one outdoor unit) when the group is set between other refrigerant systems.
- It is necessary to set on the remote controller by manual when group sets on the different refrigerant system. Please refer to remote controller installation manual.

2-4-3-9. TG-2000A(*1)+AG-150A

AG-150A can control max. 50 indoor units;
TG-2000A can control max. 40 AG-150A;*3
TG-2000A can control max. 2000 indoor units.

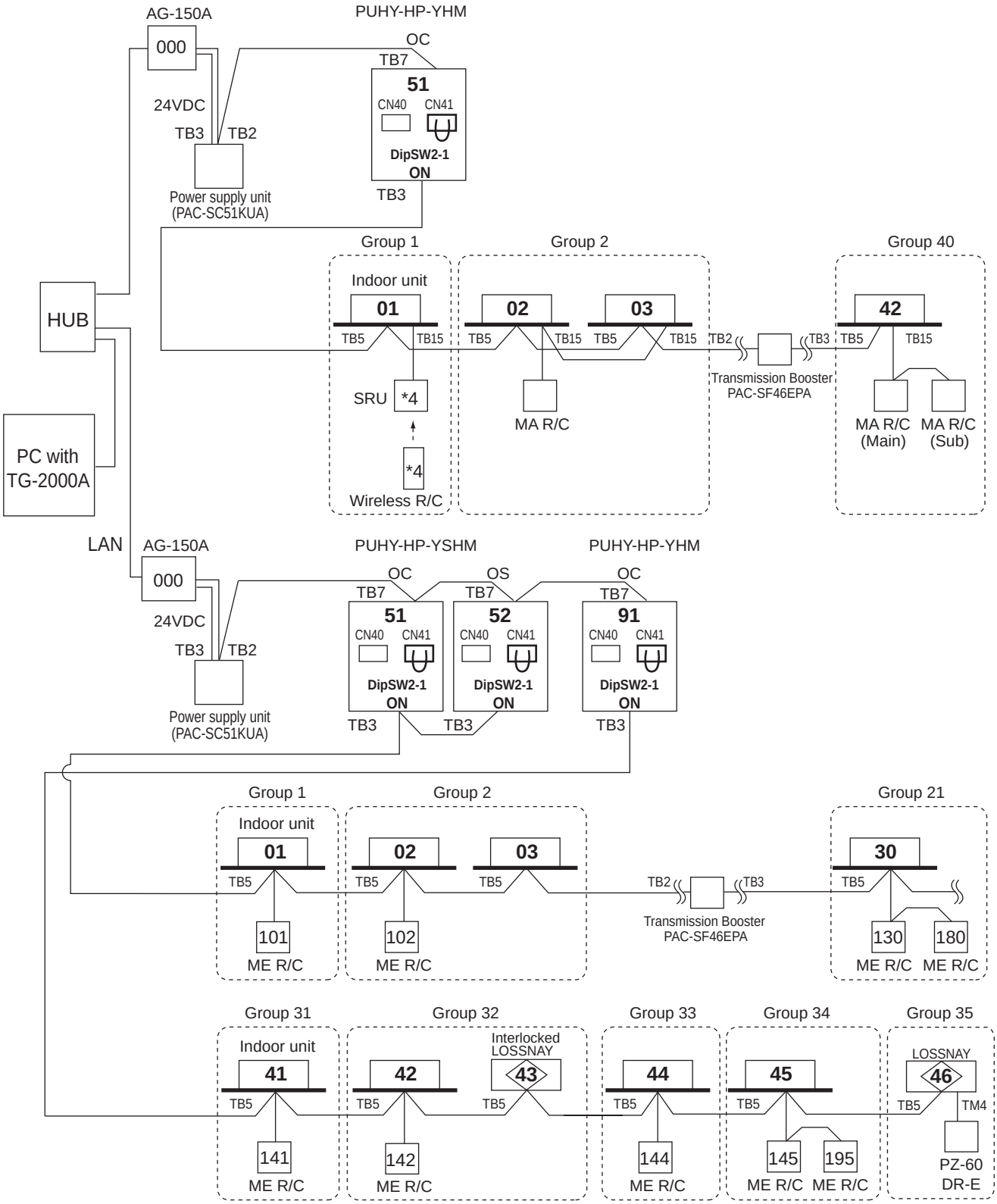

*1 TG-2000A (Ver.5.5 or later) supports AG-150A (Ver.1series).
TG-2000A (Ver. 6.1 or later) supports AG-150A (Ver. 2.1 or later) connected with the expansion controller (EC).
*2 AG-150A (Ver.1series) does not support the expansion controller (EC).
*3 When AG-150A connected with the expansion controller (EC) is connected, the number of EC will be the maximum controllable number.
TG-2000A can control up to 40 EC or AG-150A without EC connection.
*4 For Wireless R/C and Signal receiver unit (SRU), channel 1, 2 and 3 are selectable and should be set to same channel.

System HP

2-4-3. System examples

2-4-3-10. AG-150A + PAC-YG50ECA (Expansion controller)

AG-150A can control max. 150 indoor units/ via expansion controllers.

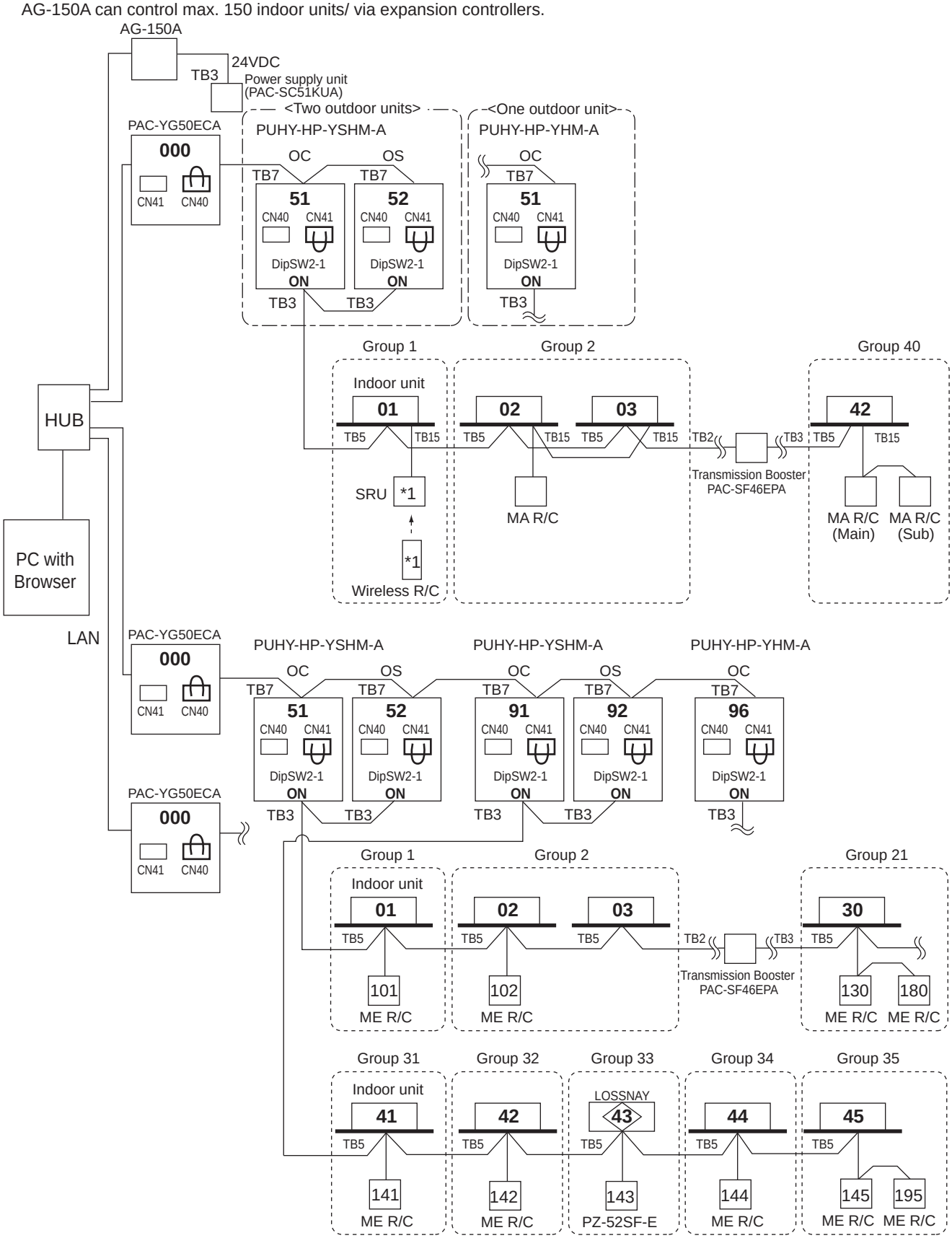

NOTE

- When connecting AG-150A to PAC-YG50ECA, TB2 for power supply unit does not need to be connected to AG-150A.

*1 For Wireless R/C and Signal receiver unit (SRU), channel 1, 2 and 3 are selectable and should be set to same channel.

2-4-3-11. LMAP

LMAP can transmission for max. 50 indoor units;
If system controller (SC) is used, DipSW1-2 at LMAP and DipSW2-1 at Outdoor unit should set to "ON".
Change Jumper from CN41 to CN40 to activate power supply to LMAP itself for those LMAP connected without system controller (SC).

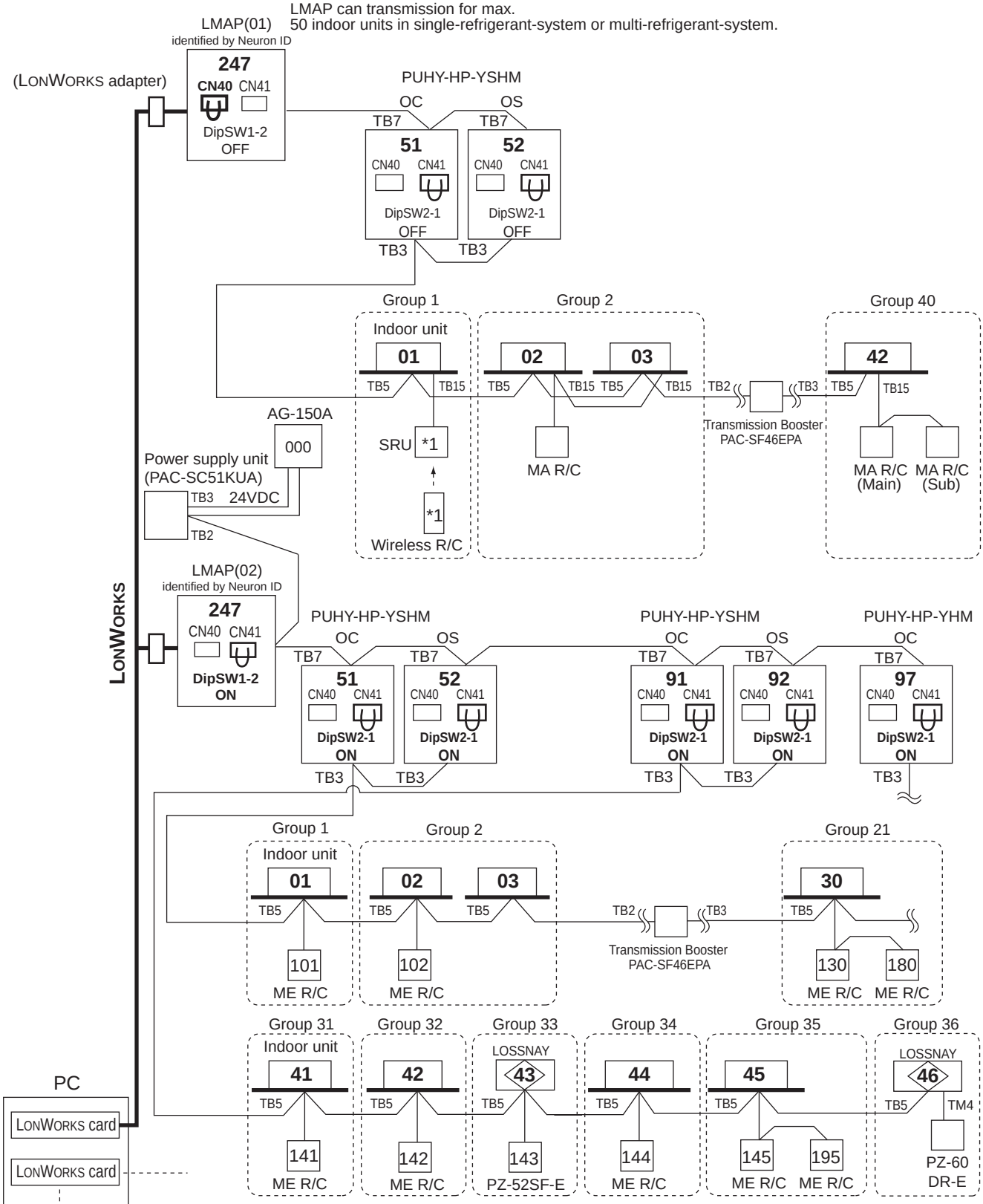

*1 For Wireless R/C and Signal receiver unit (SRU), channel 1, 2 and 3 are selectable and should be set to same channel.

2-4-3-12. BM ADAPTER

BM ADAPTER can transmission for max. 50 indoor units;
Change Jumper from CN41 to CN40 to activate power supply to BM ADAPTER itself for those BM ADAPTER connected without the power supply unit.

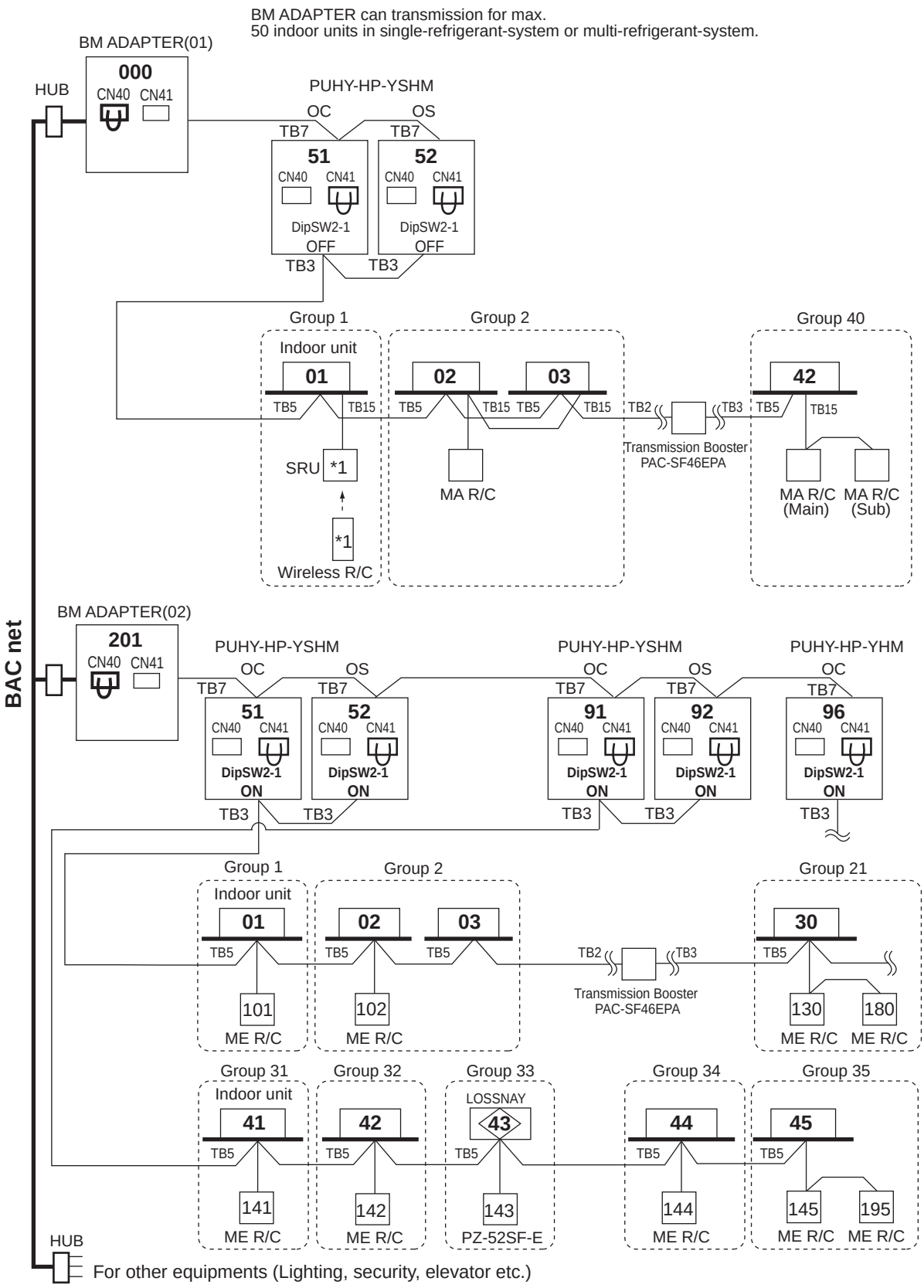

*1 For Wireless R/C and Signal receiver unit (SRU), channel 1, 2 and 3 are selectable and should be set to same channel.

2-4-3-13. BM ADAPTER+PAC-YG50ECA (Expansion controller)

BM ADAPTER(*1) can transmission for max. 150 indoor units/via expansion controllers (PAC-YG50ECA).

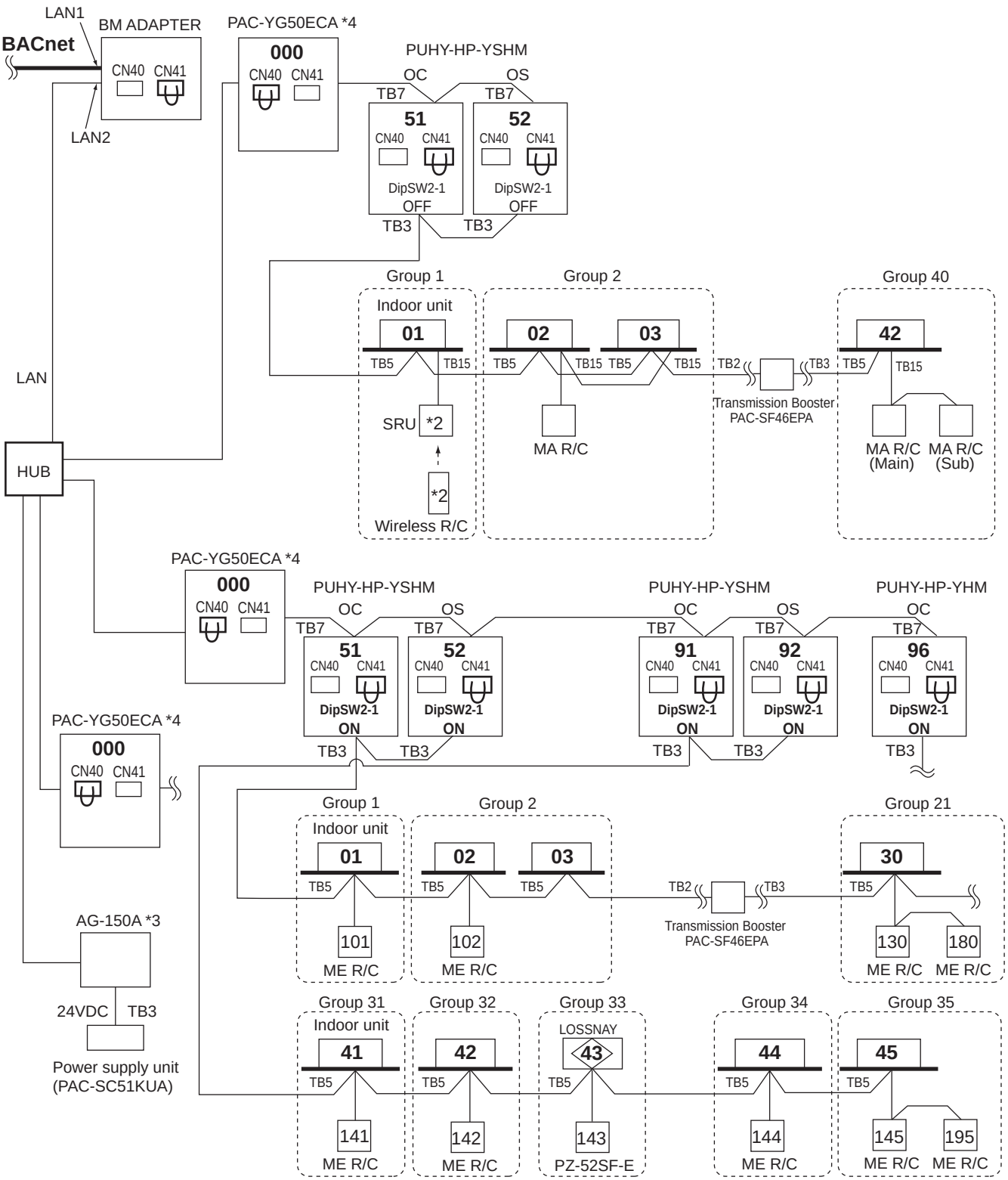

NOTE

•It is not necessary to connect the M-NET transmission line to the TB3 on BM ADAPTER. Leave the power jumper of BM ADAPTER connected to CN41.

*1 BM ADAPTER (Ver.2.00 or later) supports the expansion controller.
*2 For Wireless R/C and Signal receiver unit (SRU), channel 1, 2 and 3 are selectable and should be set to same channel.
*3 AG-150A (Ver.2.30 or later) supports the BM ADAPTER.
*4 PAC-YG50ECA (Ver.1.30 or later) supports the BM ADAPTER.

3. Piping Design

3-1. R410A Piping material

Refrigerant pipe for CITY MULTI shall be made of phosphorus deoxidized copper, and has two types.
A. Type-O : Soft copper pipe (annealed copper pipe), can be easily bent with human's hand.
B. Type-1/2H pipe : Hard copper pipe (Straight pipe), being stronger than Type-O pipe of the same radical thickness.

The maximum operation pressure of R410A air conditioner is 4.30 MPa [623psi]. The refrigerant piping should ensure the safety under the maximum operation pressure. MITSUBISHI ELECTRIC recommends pipe size as Table 3-1, or You shall follow the local industrial standard. Pipes of radical thickness 0.7mm or less shall not be used.

Table 3-1. Copper pipe size and radial thickness for R410A CITY MULTI.

Size (mm)	Size (inch)	Radial thickness (mm)	Radial thickness (mil)	Pipe type
ø6.35	ø1/4"	0.8	[32]	Type-O
ø9.52	ø3/8"	0.8	[32]	Type-O
ø12.7	ø1/2"	0.8	[32]	Type-O
ø15.88	ø5/8"	1.0	[40]	Type-O
ø19.05	ø3/4"	1.2	[48]	Type-O
ø19.05	ø3/4"	1.0	[40]	Type-1/2H or H
ø22.2	ø7/8"	1.0	[40]	Type-1/2H or H
ø25.4	ø1"	1.0	[40]	Type-1/2H or H
ø28.58	ø1-1/8"	1.0	[40]	Type-1/2H or H
ø31.75	ø1-1/4"	1.1	[44]	Type-1/2H or H
ø34.93	ø1-3/8"	1.2	[48]	Type-1/2H or H
ø41.28	ø1-5/8"	1.4	[56]	Type-1/2H or H

* For pipe sized ø19.05 (3/4") for R410A air conditioner, choice of pipe type is up to you.
* The figures in the radial thickness column are based on the Japanese standards and provided only as a reference. Use pipes that meet the local standards.

Flare

Due to the relative higher operation pressure of R410A compared to R22, the flare connection should follow dimensions mentioned below so as to achieve enough the air-tightness.

Flare pipe	Pipe size	A (For R410A) (mm[in.])
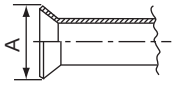	ø6.35 [1/4"]	9.1
	ø9.52 [3/8"]	13.2
	ø12.70 [1/2"]	16.6
	ø15.88 [5/8"]	19.7
	ø19.05 [3/4"]	24.0

Flare nut	Pipe size	B (For R410A) (mm[in.])
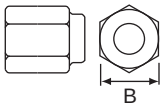	ø6.35 [1/4"]	17.0
	ø9.52 [3/8"]	22.0
	ø12.70 [1/2"]	26.0
	ø15.88 [5/8"]	29.0
	ø19.05 [3/4"]	36.0

3-2. Piping Design

3-2-1. PUHY-HP-Y(S)HM's piping length limitation, Piping dimension selection, Joint and Header selection rule

A. PUHY-HP200,250YHM

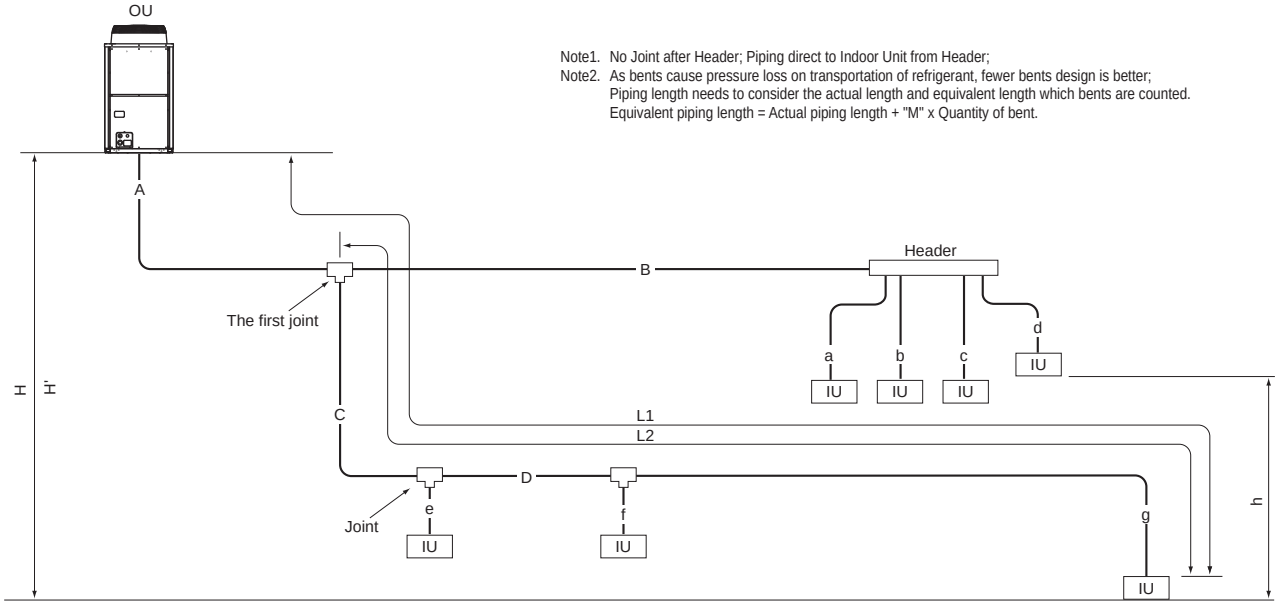

Fig. 3-2-1A Piping scheme

IU : Indoor unit , OU : Outdoor unit

Table3-2-1A1. PUHY-HP200,250YHM's piping length limitation (m [ft.])

Item	Piping in the figure	Max. length	Max. equivalent length
Total piping length	A+B+C+D+a+b+c+d+e+f+g	300 [984']	-
Farthest IU from OU (L1)	A+C+D+g / A+B+d	150 [492']	175 [574']
Farthest IU from first Joint (L2)	C+D+g / B+d	40 [131']	40 [131']
Height between OU and IU (OU above IU)	H	50 [164']	-
Height between OU and IU (OU under IU)	H'	40 [131']	-
Height between IU and IU	h	15 [49']	-

OU: Outdoor Unit, IU: Indoor Unit

Table3-2-1A2. PUHY-HP-YHM's bent equivalent length "M"

Outdoor Model	M (m/bent [ft./bent])
PUHY-HP200YHM	0.30 [0.99]
PUHY-HP250YHM	0.35 [1.15]

Table3-2-1A3. PUHY-HP200,250YHM's piping "A" size selection rule (mm [in.])

Outdoor and the first Joint	Pipe(Liquid)	Pipe(Gas)
PUHY-HP200YHM=CMY-Y102S-G2	ø12.70 [1/2"]	ø19.05 [3/4"]
PUHY-HP250YHM=CMY-Y102L-G2	ø12.70 [1/2"]	ø22.20 [7/8"]

Table3-2-1-6. R410A Joint selection rule

Total down-stream Indoor capacity	Joint
~ P200	CMY-Y102S-G2
P201 ~ P400	CMY-Y102L-G2
P401 ~ P650	CMY-Y202-G2

*Concerning detailed usage of Joint parts, refer to its Installation Manual.

Table3-2-1-4. PUHY-HP-YHM's piping"B","C","D"size selection rule (mm [in.])

Total down-stream Indoor capacity	Pipe(Liquid)	Pipe(Gas)
~ P140	ø9.52 [3/8"]	ø15.88 [5/8"]
P141 ~ P200	ø9.52 [3/8"]	ø19.05 [3/4"]
P201 ~ P300	ø9.52 [3/8"]	ø22.20 [7/8"]
P301 ~ P400	ø12.70 [1/2"]	ø28.58 [1-1/8"]
P401 ~ P650	ø15.88 [5/8"]	ø28.58 [1-1/8"]

Table3-2-1-7. R410A Header selection rule

	4-branch Header	8-branch Header	10-branch Header
	CMY-Y104-G	CMY-Y108-G	CMY-Y1010-G
Total down-stream Indoor capacity	<=P200	<=P400	<=P650

* CMY-Y104-G can directly connect PUHY-HP200YHM, but can NOT directly connect PUHY-HP250YHM or above;
* CMY-Y108-G can directly connect PUHY-HP200-400Y(S)HM, but can NOT directly connect PUHY-HP500YSHM
* CMY-Y1010-G can directly connect PUHY-HP200-500Y(S)HM;
* CMY-Y104-G can NOT connect P200, P250 Indoor, but CMY-Y108, Y1010-G can do;
* Concerning detailed usage of Header parts, refer to its Installation Manual.

Note3. Indoor capacity is described as its model size;
For example, PEFY-P32VMM-E-S, its capacity is P32;
Note4. Total down-stream Indoor capacity is the summary of the model size of Indoors downstream.
For example, PEFY-P25VMM-E-S+PEFY-P32VMM-E-S: Total Indoor capacity=P25+P32=P57
Note5. Piping sized determined by the Total down-stream indoor capacity is NOT necessary
to be bigger than the up-stream one.
i.e. A>=B; A>=C>=D

Table3-2-1-5. R410A Indoor's direct piping"a","b","c","d","e","f","g"size selection rule (mm [in.])

Indoor Unit size	Pipe(Liquid)	Pipe(Gas)
P15,P20,P25,P32,P40,P50	ø6.35 [1/4"]	ø12.70 [1/2"]
P63,P71,P80,P100,P125,P140	ø9.52 [3/8"]	ø15.88 [5/8"]
P200	ø9.52 [3/8"]	ø19.05 [3/4"]
P250	ø9.52 [3/8"]	ø22.20 [7/8"]

3-2-2. PUHY-HP400-500YSHM Piping

B. PUHY-HP400,500YSHM

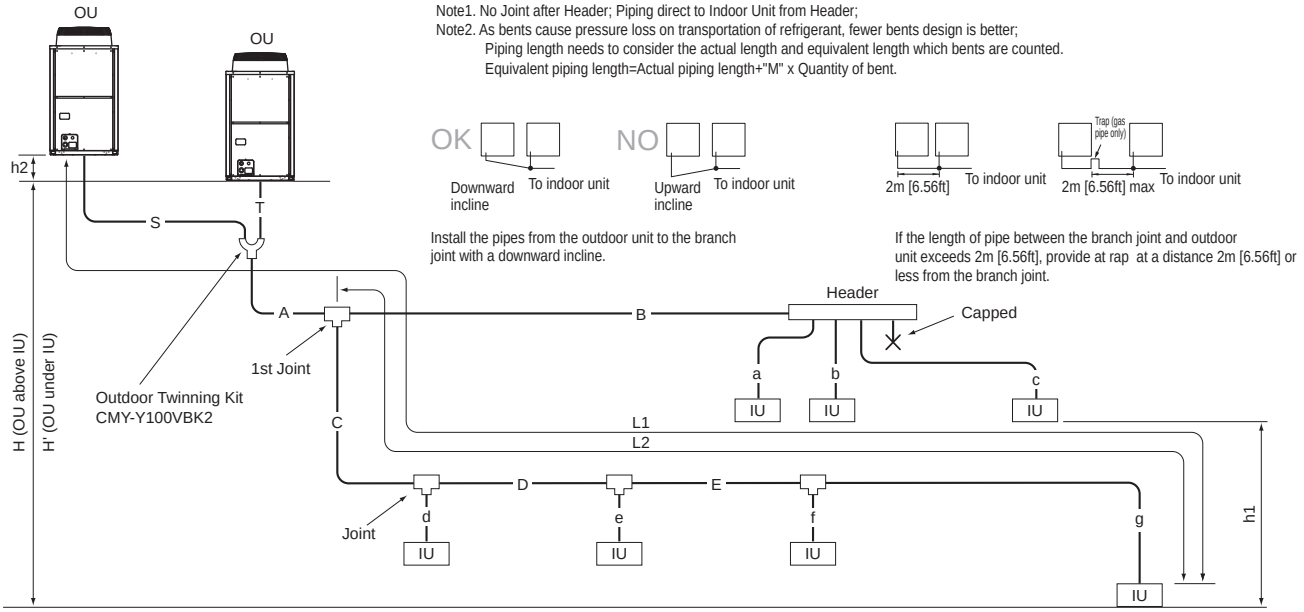

Fig. 3-2-1B Piping scheme

IU : Indoor unit , OU : Outdoor unit

Table3-2-2-1. Piping length (m [ft.])

Item	Piping in the figure	Max. length	Max. equivalent length
Total piping length	S+T+A+B+C+D+E+a+b+c+d+e+f+g	300 [984']	-
Distance between OU and OU	S+T	10[32']	-
Height between OU and OU	h2	0.1[0.3']	-
Farthest IU from OU (L1)	S(T)+A+C+D+E+g / S(T)+A+B+c	150 [492']	175 [574']
Farthest IU from the first Joint (L2)	C+D+E+g / B+c	40 [131']	40 [131']
Height between OU and IU (OU above IU)	H	50 [164']	-
Height between OU and IU (OU under IU)	H'	40 [131']	-
Height between IU and IU	h1	15 [49']	-

OU: Outdoor Unit, IU: Indoor Unit

Table3-2-2-2. Bent equivalent length "M"

Outdoor Model	M (m/bent [ft./bent])
PUHY-HP400YSHM	0.50 [1.64]
PUHY-HP500YSHM	0.50 [1.64]

Table3-2-2-3. Piping "A" size selection rule (mm [in.])

Outdoor and the first Joint	Pipe(Liquid)	Pipe(Gas)
CMY-Y100VBK2=CMY-Y202-G2	ø15.88[5/8"]	ø28.58[1-1/8"]

For Piping size "S","T", please refer to specification of the Twining kit CMY-Y100VBK2 at the Outdoor unit's external drawing.

Table3-2-2-4. R410A Joint selection rule

Total down-stream Indoor capacity	Joint
~ P200	CMY-Y102S-G2
P201 ~ P400	CMY-Y102L-G2
P401 ~ P650	CMY-Y202-G2

*First Joint is always CMY-Y202-G2;
*Concerning detailed usage of Joint parts, refer to its Installation Manual.

3-3. Refrigerant charging calculation

At the time of shipping, the outdoor unit is charged with the refrigerant. As this charge does not include the amount needed for extended piping, additional charging for each refrigerant line will be required on site. In order that future servicing may be properly provided, always keep a record of the size and length of each refrigerant line and the amount of additional charge by writing it in the space provided on the outdoor unit.

(1) Calculation of additional refrigerant charge

- Calculate the amount of additional charge based on the length of the piping extension and the size of the refrigerant line.
- Use the table to the below as a guide to calculating the amount of additional charging and charge the system accordingly.
- If the calculation results in a fraction of less than 0.1kg, round up to the next 0.1kg. For example, if the result of the calculation was 12.38kg, round the result up to 12.4kg.

<Additional Charge>

Additional refrigerant charge	=	Total length of liquid pipe sized ø19.05	+	Total length of liquid pipe sized ø15.88	+	Total length of liquid pipe sized ø12.7	+	Total length of liquid pipe sized ø9.52	+	Total length of liquid pipe sized ø6.35	+ α
(kg)		(m) x 0.29 (kg/m)		(m) x 0.20 (kg/m)		(m) x 0.12 (kg/m)		(m) x 0.06 (kg/m)		(m) x 0.024 (kg/m)	

Table3-3-1. Value of α

Total capacity of connecting indoor units	α
Models ～ 80	2.0 kg
Models 81～160	2.5 kg
Models 161～330	3.0 kg
Models 331～390	3.5 kg
Models 391～480	4.5 kg
Models 481～630	5.0 kg
Models 631～	6.0 kg

Example: PUHY-HP250YHM

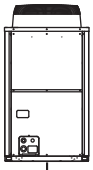

m [kg]

Indoor	1: P125	A: ø12.7	40 m	a: ø 9.52	10 m
	2: P100	B: ø9.52	10 m	b: ø 9.52	5 m
	3: P40	C: ø9.52	15 m	c: ø 6.35	10 m
	4: P32			d: ø 6.35	10 m

The total length of liquid pipe of each size is as follows:
ø12.7 : A= 40 = 40 m
ø9.52 : B + C + a + b = 10 + 15 + 10 + 5 = 40 m
ø6.35 : c + d = 10 + 10 = 20 m

Total capacity of connecting Indoor units Pt :
Pt = P125 + P100 + P40 + P32 = P297, therefore α = 3.0kg

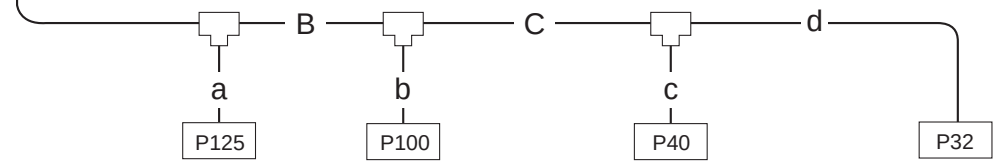

m [kg]

Additional refrigerant charge	=	Total length of liquid pipe sized ø19.05 x 0.29 (kg/m)	+	Total length of liquid pipe sized ø15.88 x 0.20 (kg/m)	+	Total length of liquid pipe sized ø12.7 x 0.12 (kg/m)	+	Total length of liquid pipe sized ø9.52 x 0.06 (kg/m)	+	Total length of liquid pipe sized ø6.35 x 0.024 (kg/m)	+ 3.0
(kg)		0 (m) x 0.29 (kg/m)		0 (m) x 0.20 (kg/m)		40 (m) x 0.12 (kg/m)		60 (m) x 0.06 (kg/m)		20 (m) x 0.024 (kg/m)	

= 0 + 0 + 40 x 0.12 + 40 x 0.06 + 20 x 0.024 + 3.0
= 10.68kg

4. Outdoor Installation

4-1. Requirement on installation site

1. No direct thermal radiation to the unit.
2. No possibility of annoying the neighbors by the sound of the unit.
   Valves and refrigerant flow on the outdoor unit may generate noise.
3. Avoid the sites where strong winds blow.
4. With strength to bear the weight of the unit.
5. Drain flow from the unit is cared at heating mode.
6. Enough space for installation and service as shown at 4-2.
7. Avoid the sites where acidic solutions or chemical sprays (sulfur series) are used frequently.
8. The unit should be secure from combustible gas, oil, steam, chemical gas like acidic solution, sulfur gas and so on.

4-2. Spacing

In case of single installation

- Secure enough space around the unit as shown in the figure.

<A> : Top view
<B> : Side view
<C> : When there is little space up to an obstruction

Ⓐ : Front
Ⓑ : Unit height
Ⓒ : Back
Ⓓ : Air outlet guide (Procured at the site)

(1) If the distance is 300 mm [11-13/16 in.] or more between the rear side and the wall

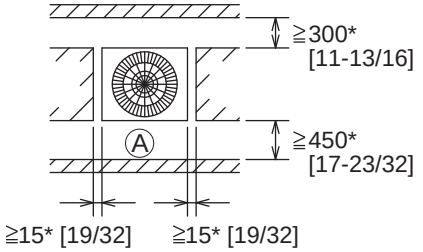

<A>

(2) If the distance is 100 mm [3-15/16 in.] or more between the rear side and the wall

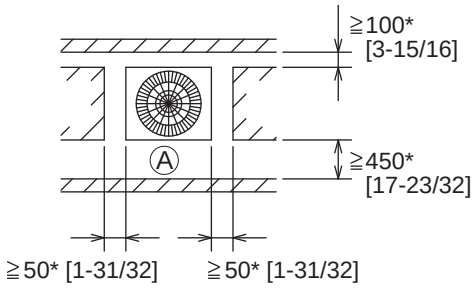

<A>

(3) If the wall height (H) of the front, rear or side exceeds the wall height restriction

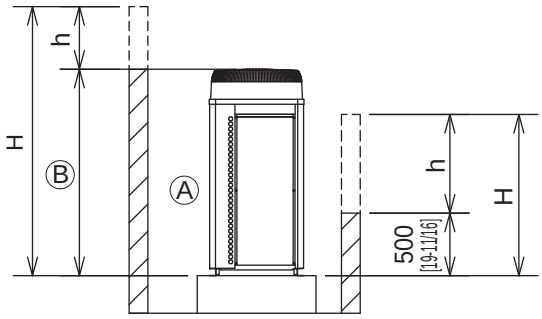

<B>

- When the height of the walls on the front, back or on the sides <H> exceeds the wall height limit as defined below, add the height that exceeds the height limit <h> to the figures that are marked with an asterisk.

<Wall height limit> Front: Up to the unit height
Back: Up to 500mm [19-11/16 in.] from the unit bottom
Side: Up to the unit height

(4) If there are obstacles at the upper part of the unit

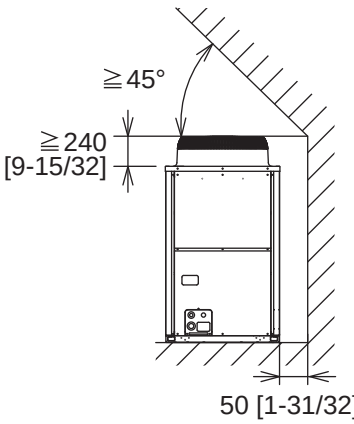

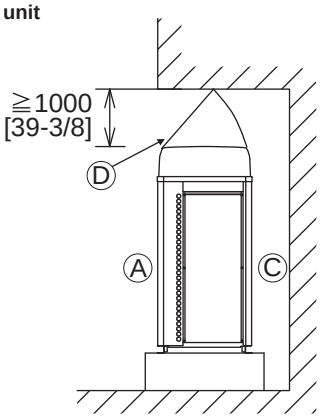

<C>

(Unit : mm [in.])

System HP

In case of collective installation and continuous installation

Ⓐ : Front Ⓒ : Wall height (H)

Ⓑ : Must be open

- When multiple units are installed adjacent to each other, secure enough space to allow for air circulation and passageways between groups of units as shown in the figures.
- At least two sides must be left open.
- As with the single installation, add the height that exceeds the height limit <h> to the figures that are marked with an asterisk.
- If there is a wall at both the front and the rear of the unit, install up to six units consecutively in the side direction and provide a space of 1000mm or more as inlet space/passage space for each six units.

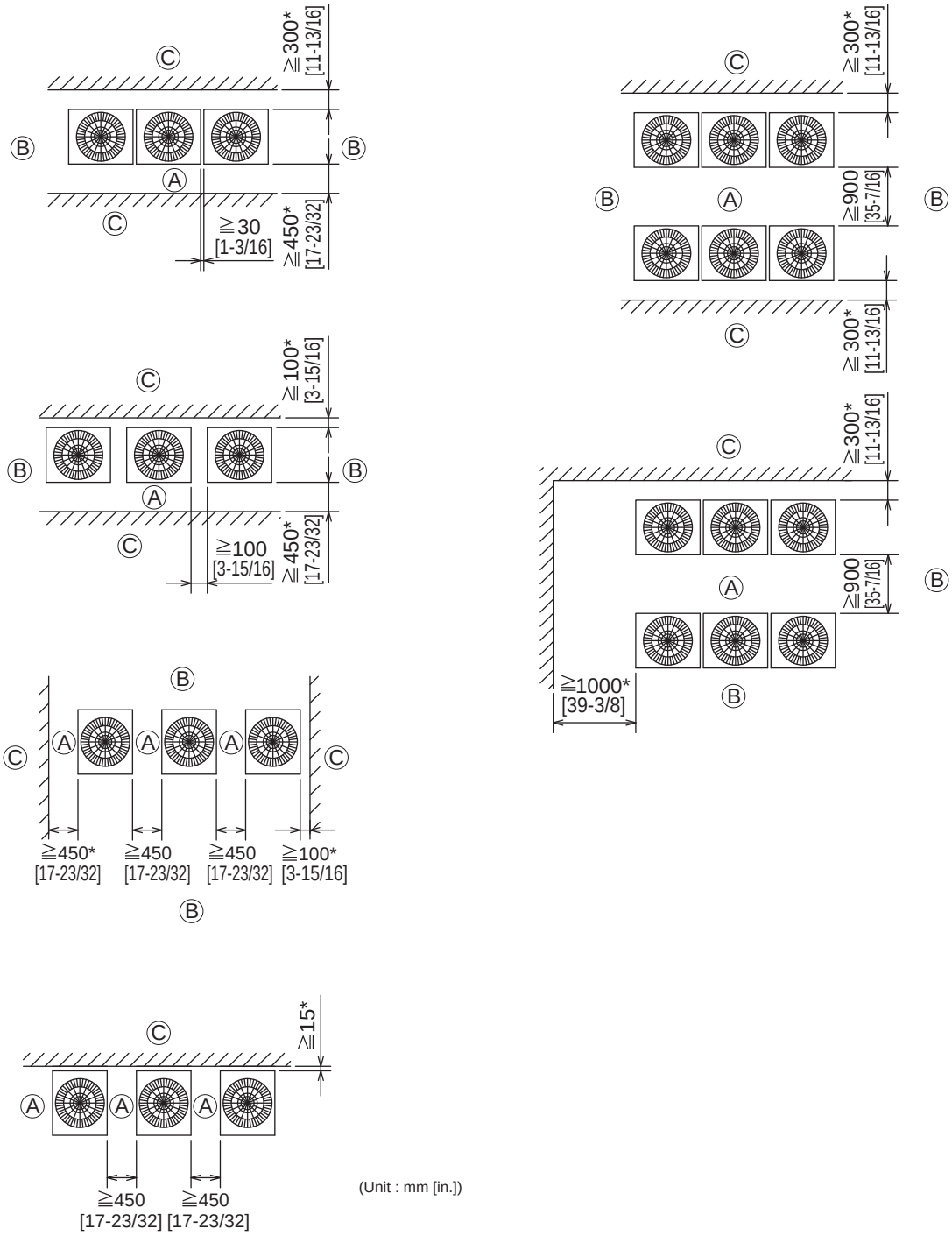

(Unit : mm [in.])

4-3. Piping direction

4-3-1. Lifting method

· When lifting the unit with ropes, run the ropes under the unit and use the lifting hole.
· Support the unit at four points with two ropes, and avoid giving mechanical shock.
· Suspension rope angle must be 40˚ or less, so as to avoid compressing fan guard.
· Use two ropes, each at least 8m [26 ft.] in length
· Use ropes strong enough to support the weight of the unit.
· Always suspend the unit from four corners. (It is dangerous to suspend a unit from two corners and must not be attempted.)
· Use protective pads to keep the ropes from scratching the panels on the unit.

(Unit : m [ft.])

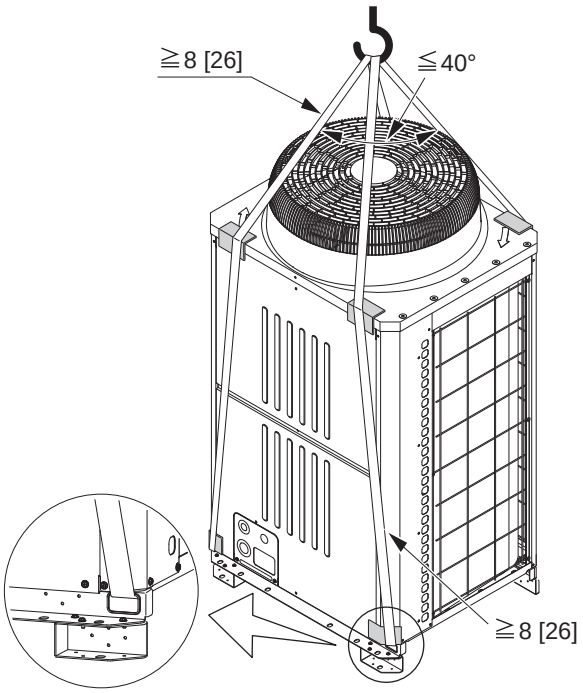

⚠ CAUTION

Exercise caution when transporting products.

· Products weighing more than 20 kg [45 LBS] should not be carried alone.
· Do not carry the product by the PP bands.
· To avoid the risk of injury, do not touch the heat exchanger fins.
· Plastic bags may pose a risk of choking hazard to children. Tear plastic bags into pieces before disposing of them.
· When lifting and transporting outdoor units with ropes, run the ropes through lifting hole at the unit base. Securely fix the unit so that the ropes will not slide off, and always lift the unit at four points to prevent the unit from falling.

4-3-2. Installation

- Secure the unit with anchor bolts as shown in the figure below so that the unit will not topple over with strong wind or during an earthquake.
- Install the unit on a durable base made of such materials as concrete or angle steel.
- Take appropriate anti-vibration measures (e.g., vibration damper pad, vibration isolation base) to keep vibrations and noise from being transmitted from the unit through walls and floors.
- Install the unit in such a way that the corner of the angle bracket at the base of the unit shown in the figure below is securely supported.
- Install the anchor bolt in such a way that the top end of the anchor bolt do not stick out more than 30 mm [1-3/16in].
- This unit is not designed to be anchored with post-installation-type anchor bolts, although by adding fixing brackets anchoring with such type of anchor bolts becomes possible.

Ⓐ : M10 anchor bolt procured at the site.
Ⓑ : Corner is not seated.
Ⓒ : Fixing bracket for hole-in anchor bolt (3 locations to fixwith screws).
Ⓓ : Detachable leg

⚠ WARNING

Properly install the unit on a surface that can withstand the weight of the unit. Unit installed on an unstable surface may fall and cause injury.

⚠ WARNING

Take appropriate safety measures against strong winds and earthquakes to prevent the unit from falling.

<Without detachable leg>

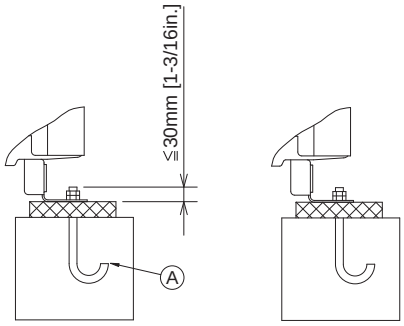

Install the unit in such a way that the corner of the angle bracket at the base of the unit shown in the figure is securely supported. The brackets may bend if they are not securely supported.

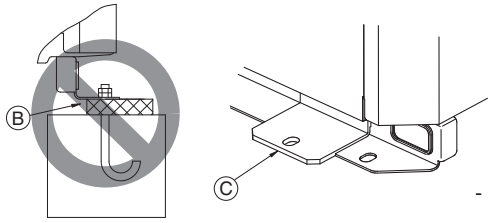

<With detachable leg>

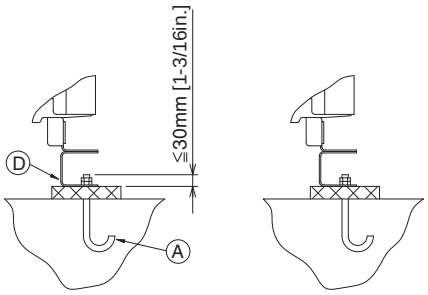

Install the unit in such a way that the corner of the angle bracket at the base of the unit shown in the figure is securely supported. The brackets may bend if they are not securely supported.

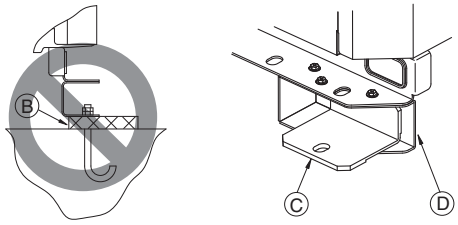

Take into consideration the durability of the base, water drainage route (Drain water is discharged from outdoor units during operation.), piping route, and wiring route when performing foundation work.

4-3-3. Anchor bolt positions

• Individual installation

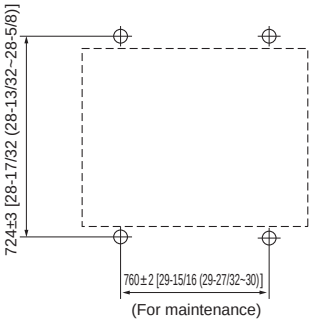

(For maintenance)

• Collective installation (Unit : mm [in])

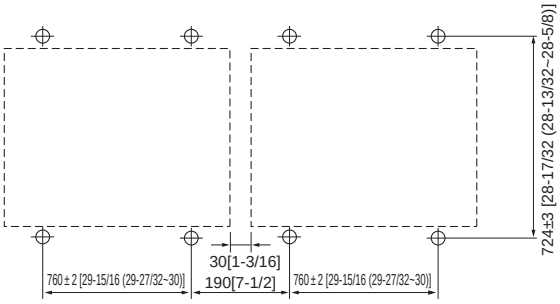

Leave a minimum of 30 mm [1-3/16 in] between units

4-3-4. Installation

When the pipes and/or cables are routed at the bottom of the unit, make sure that the through hole at the base of the unit does not get blocked with the installation base.
When the pipes are routed at the bottom of the unit, the base should be at least 100 mm [3-15/16 in] in height.

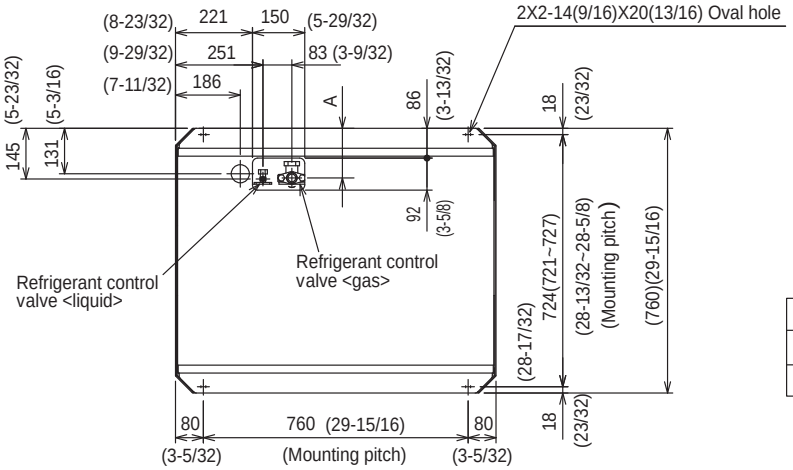

Bottom view

Unit : mm[in]

Model	A
PUHY-HP200YHM	145(5-23/32)
PUHY-HP250YHM	142(5-19/32)

Installation base parallel to the unit's front panel

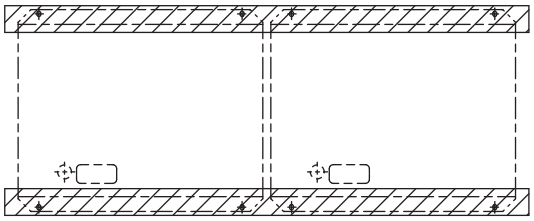

Installation base perpendicular to the unit's front panel

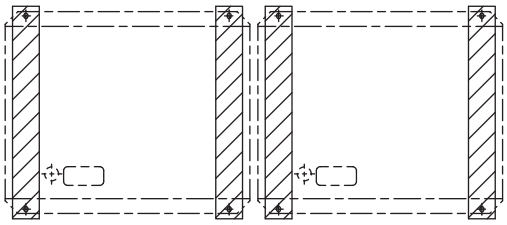

4-3-5. Refrigerant pipe routing

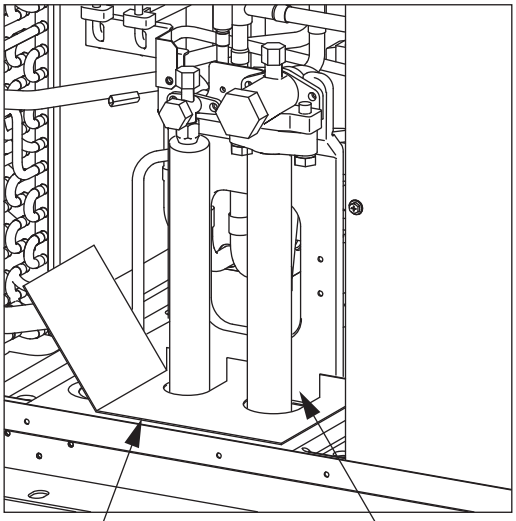

Filler plate
(not supplied)

Fill the gap at the site .

The gaps around the edges of through holes for pipes and wires on the unit allow water or mice to enter the unit and damage its parts. Close these gaps with filler plates.

This unit allows two types of pipe routing:
- Bottom piping
- Front piping

⚠ CAUTION

To prevent small animals, water and snow from entering the unit and damage its parts, close the gap around the edges of through holes for pipes and wires with filler plates.

4-3-6. Twinning on the outdoor unit side

- The tilt angle of the twinning pipe
  The tilt angle of the twinning pipe must be within ±15° with the horizontal plane.
  Tilting the twinning pipe more than specified will cause damage to the unit.

- The length of the straight part of the pipe before the branching
  For the twinning kit, always use the accessory piping parts.
  The length of the straight part of pipe connected in front of the twinning pipe must be 500 mm [19 in.] or longer.
  (Connect the field piping so that the length of the straight part of pipe connected in front of the twinning pipe can be 500 mm [19 in.] or longer.)
  If the length is less than 500 mm [19 in.], it will cause damage to the unit.

Note: See the following drawing for the fitting position of the twinning pipe.

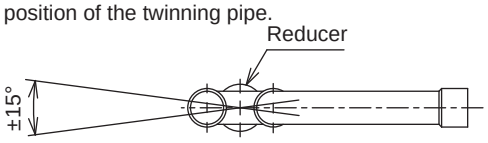

The tilt angle of the reducer should be within ±15° with the horizontal plane.

- The piping connection
  When connecting the twinning kit to the outdoor unit, note the following:
  If the length of piping from the twinning kit to the outdoor unit is more than 2 m [6 ft.], install a trap within 2 m [6 ft.] from the outdoor unit. The height of the trap must be 200 mm [7 in.] or higher.

<2 m [6 ft.] or less>

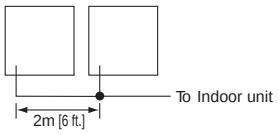

<More than 2 m [6 ft.]>

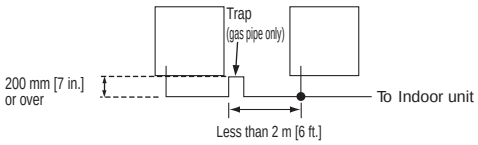

When installing the twinning kit in a higher position than the outdoor unit base, make sure that the twinning kit is installed in a position lower than 200 mm [7 in.] from the outdoor unit base.

<PUHY-HP400, 500YSHM-A>

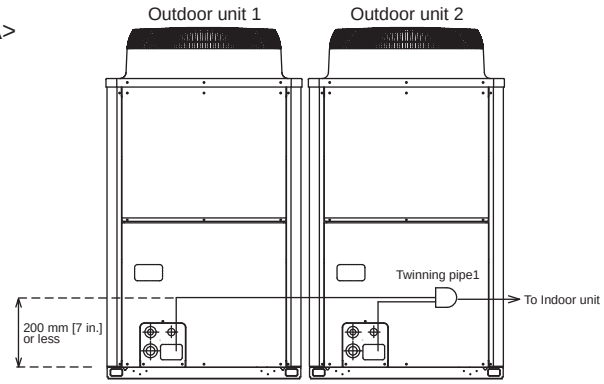

4-3-7. Twinning on the outdoor unit side

See the following drawing for connecting the pipes between the outdoor units.

<PUHY-HP400, 500YSHM-A>

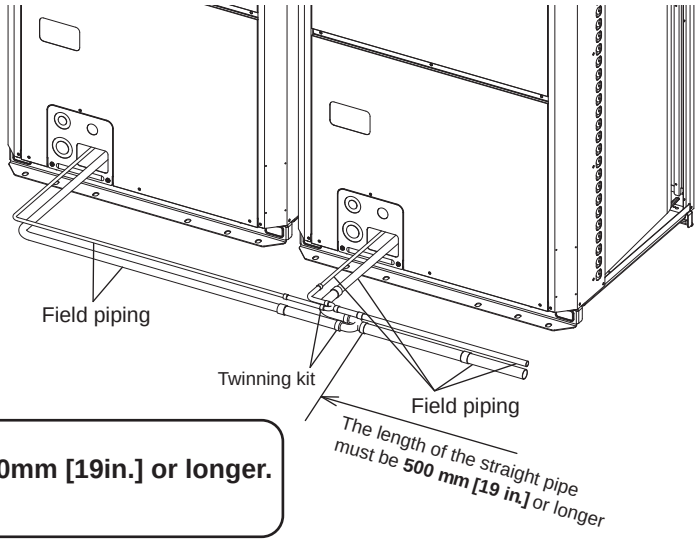

CAUTION

The length of the straight pipe must be 500mm [19in.] or longer. If not, it may cause improper operation.

4-4. Weather countermeasure

• Snow hood

Unit : mm[in]

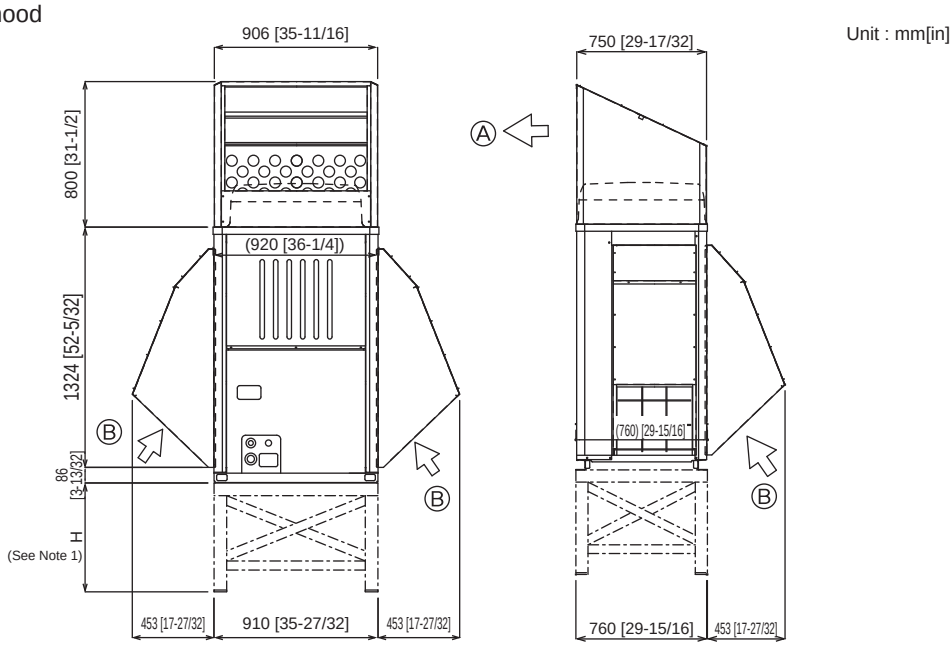

<Front view> <Side view>

Ⓐ Outlet Ⓑ Inlet

Note:
1.Height of frame base for snow damage prevention (H) shall be twice as high as expected snowfall. Width of frame base shall not exceed that of the unit. The frame base shall be made of angle steel, etc., and designed so that snow and wind slip through the structure. (If frame base is too wide, snow will be accumulated on it.)
2.Install unit so that wind will not directly lash against openings of inlet and outlet ducts.
3.Build frame base at customer referring to this figure.
Material: Galvanized steel plate 1.2T [1/16 in T]
Painting: Overall painting with polyester powder
Color: Munsell 5Y8/1 (same as that of unit)
4.When the unit is used in a cold region and the heating operation is continuously performed for a long time when the outside air temperature is below freezing, install a heater to the unit base or take other appropriate measures to prevent water from freezing on the base.

Countermeasure to wind

Referring to the figure shown below, take appropriate measures which will suit the actual situation of the place for installation.

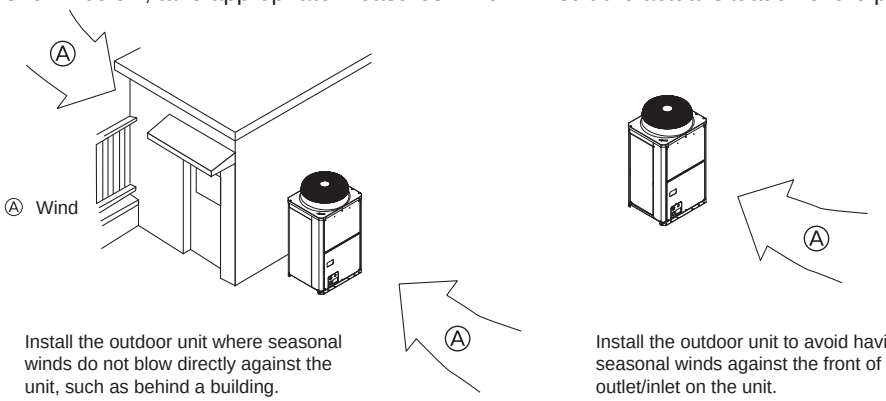

Install the outdoor unit where seasonal winds do not blow directly against the unit, such as behind a building.

Install the outdoor unit to avoid having seasonal winds against the front of air outlet/inlet on the unit.

5. Caution for refrigerant leakage

The installer and/or air conditioning system specialist shall secure safety against refrigerant leakage according to local regulations or standards. The following standard may be applicable if no local regulation or standard is available.

5-1. Refrigerant property

R410A refrigerant is harmless and incombustible. The R410A is heavier than the indoor air in density. Leakage of the refrigerant in a room has possibility to lead to a hypoxia situation. Therefore, the Critial concentration specified below shall not be exceeded even if the leakage happens.

- **Critical concentration**

  Critical concentration hereby is the refrigerant concentration in which no human body would be hurt if immediate measures can be taken when refrigerant leakage happens.

Critical concentration of R410A: 0.30kg/m^3
(The weight of refrigeration gas per 1 m^3 air conditioning space.);
* The Critical concentration is subject to ISO5149, EN378-1.

For the CITY MULTI system, the concentration of refrigerant leaked should not have a chance to exceed the Critical concentration in any situntion.

5-2. Confirm the Critical concentration and take countermeasure

The maximum refrigerant leakage concentration (Rmax) is defined as the result of the possible maximum refrigerant weight (Wmax) leaked into a room divided by its room capacity (V).It is referable to Fig.5-1.The refrigerant of Outdoor unit here includes its original charge and additional charge at the site.
The additional charge is calculated according to "**3-3 .Refrigerant charging calculation**" and shall not be over charged at the site.
Procedure 5-2-1~3 tells how to confirm maximum refrigerant leakage concentration (Rmax) and how to take countermeasures against a possible leakage.

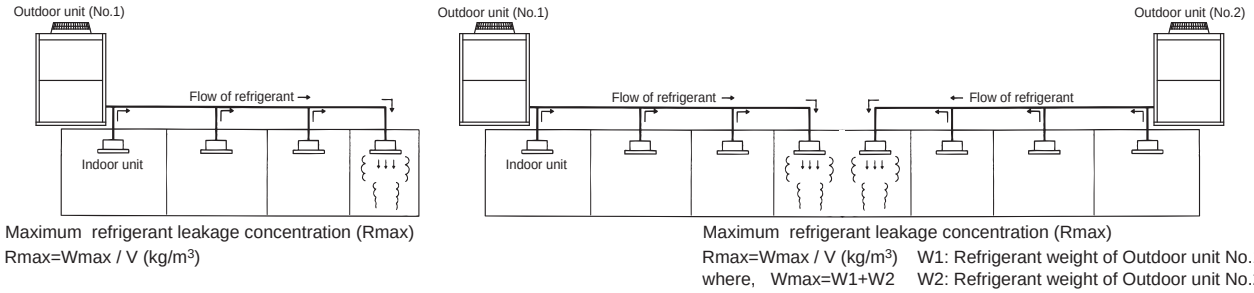

Fig. 5-1 The maximum refrigerant leakage concentration

5-2-1.Find the room capacity (V),
If a room having total opening area more than 0.15% of the floor area at a low position with another room/space, the two rooms/space are considered as one.The total space shall be added up.

5-2-2.Find the possible maximum leakage (Wmax) in the room.If a room has Indoor unit(s) from more than 1 Outdoor unit, add up the refrigerant of the Outdoor units.

5-2-3.Divide (Wmax) by (V) to get the maximum refrigerant leakage concentration (Rmax).

5-2-4.Find if there is any room in which the maximum refrigerant leakage concentration (Rmax) is over 0.30kg/m^3.
If no, then the CITY MULTI is safe against refrigerant leakage.
If yes, following countermeasure is recommended to do at site.
Countermeasure 1:Let-out (making V bigger)
Design an opening of more than 0.15% of the floor area at a low position of the wall to let out the refrigerant whenever leaked.
e.g.make the upper and lower seams of door big enough.
Countermeasure 2:Smaller total charge (making Wmax smaller)
e.g.Avoid connecting more than 1 Outdoor unit to one room.
e.g.Using smaller model size but more Outdoor units.
e.g.Shorten the refrigerant piping as much as possible.
Countermeasure 3:Fresh air in from the ceiling (Ventilation)
As the density of the refrigerant is bigger than that of the air.Fresh air supply from the ceiling is better than air exhausting from the ceiling.
Fresh air supply solution refers to Fig.5-2~4.

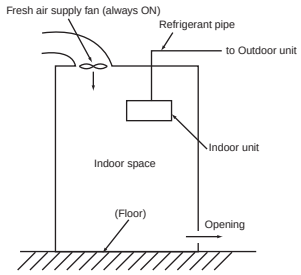

Fig.5-2.Fresh air supply always ON

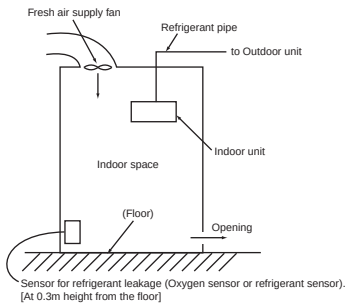

Fig.5-3.Fresh air supply upon sensor action

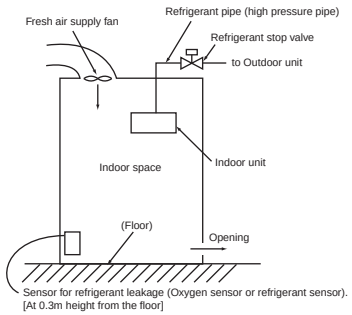

Fig.5-4.Fresh air supply and refrigerant shut-off upon sensor action

Note 1.Countermeasure 3 should be done in a proper way in which the fresh air supply shall be on whenever the leakage happens.
Note 2.In principle, MITSUBISHI ELECTRIC requires proper piping design, installation and air-tight testing after installation to avoid leakage happening.
In the area should earthquake happen, anti-vibration measures should be fully considered.
The piping should consider the extension due to the temperature variation.

CITY MULTI
SYSTEM DESIGN R2 SERIES

1. Electrical work ..... 4 - 124
   1-1.General cautions ..... 4 - 124
   1-2.Power supply for Indoor unit and Outdoor unit ..... 4 - 125
   1-3.Power cable specifications ..... 4 - 131
   1-4.Power supply examples ..... 4 - 132
2. M-NET control ..... 4 - 134
   2-1.Transmission cable length limitation ..... 4 - 134
   2-2.Transmission cable specifications ..... 4 - 135
   2-3.System configuration restrictions ..... 4 - 136
   2-4.Address setting ..... 4 - 139
3. Piping Design ..... 4 - 152
   3-1.R410A Piping material ..... 4 - 152
   3-2.Piping Design ..... 4 - 153
   3-3.Refrigerant charging calculation ..... 4 - 157
4. Outdoor Installation ..... 4 - 158
   4-1.Requirement on installation site4 ..... 4 - 158
   4-2.Spacing ..... 4 - 159
   4-3.Piping direction ..... 4 - 161
   4-4.Weather countermeasure ..... 4 - 166
5. Caution for refrigerant leakage ..... 4 - 167
   5-1.Refrigerant property ..... 4 - 167
   5-2.Confirm the Critical concentration and take countermeasure ..... 4 - 167

1. Electrical work

1-1. General cautions

① Follow ordinance of your governmental organization for technical standard related to electrical equipment, wiring regulations, and guidance of each electric power company.
② Wiring for control (hereinafter referred to as transmission cable) shall be (50mm[1-5/8in.] or more) apart from power source wiring so that it is not influenced by electric noise from power source wiring. (Do not insert transmission cable and power source wire in the same conduit.)
③ Be sure to provide designated grounding work to outdoor unit.
④ Give some allowance to wiring for electrical part box of indoor and outdoor units, because the box is sometimes removed at the time of service work.
⑤ Never connect 380~415V(220~240V) power source to terminal block of transmission cable. If connected,electrical parts will be burnt out.
⑥ Use 2-core shield cable for transmission cable. If transmission cables of different systems are wired with the same multiple-core cable, the resultant poor transmitting and receiving will cause erroneous operations.

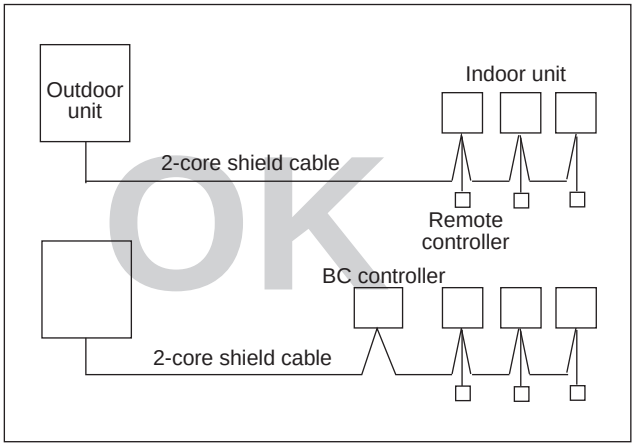

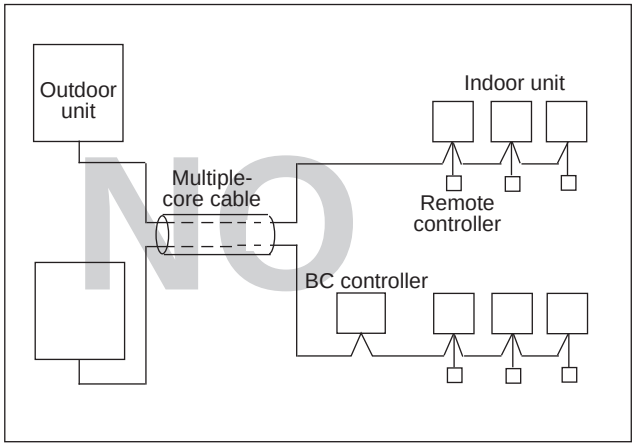

1-2. Power supply for Indoor unit and Outdoor unit

1-2-1. Electrical characteristics of Indoor unit

Symbols: MCA : Min.Circuit Amps (=1.25xFLA) FLA : Full Load Amps
IFM :Indoor Fan Motor Output : Fan motor rated output

PMFY-P-VBM-E	Power supply			IFM	
	Volts / Hz	Range +-10%	MCA(A)	Output(kW)	FLA(A)
PMFY-P20VBM-E	220-240V / 50Hz 220V / 60Hz	Max.: 264V Min.: 198V	0.25	0.028	0.20
PMFY-P25VBM-E			0.26	0.028	0.21
PMFY-P32VBM-E			0.26	0.028	0.21
PMFY-P40VBM-E			0.33	0.028	0.26

PLFY-P-VCM-E	Power supply			IFM	
	Volts / Hz	Range +-10%	MCA(A)	Output(kW)	FLA(A)
PLFY-P20VCM-E	220-240V / 50Hz	Max.: 264V Min.: 198V	0.29	0.011	0.23
PLFY-P25VCM-E			0.29	0.015	0.23
PLFY-P32VCM-E			0.35	0.020	0.28
PLFY-P40VCM-E			0.35	0.020	0.28

PLFY-P-VBM-E	Power supply			IFM	
	Volts / Hz	Range +-10%	MCA(A)	Output(kW)	FLA(A)
PLFY-P32VBM-E	220-240V / 50Hz 220V / 60Hz	Max.: 264V Min.: 198V	0.28	0.050	0.22
PLFY-P40VBM-E			0.36	0.050	0.29
PLFY-P50VBM-E			0.36	0.050	0.29
PLFY-P63VBM-E			0.45	0.050	0.36
PLFY-P80VBM-E			0.64	0.050	0.51
PLFY-P100VBM-E			1.25	0.120	1.00
PLFY-P125VBM-E			1.34	0.120	1.07

PLFY-P-VLMD-E	Power supply			IFM	
	Volts / Hz	Range +-10%	MCA(A) (50 / 60Hz)	Output(kW)	FLA(A) (50 / 60Hz)
PLFY-P20VLMD-E	220-240V / 50Hz 220-230V / 60Hz	Max.: 264V Min.: 198V	0.45 / 0.46	0.015	0.36 / 0.37
PLFY-P25VLMD-E			0.45 / 0.46	0.015	0.36 / 0.37
PLFY-P32VLMD-E			0.45 / 0.46	0.015	0.36 / 0.37
PLFY-P40VLMD-E			0.50 / 0.53	0.015	0.40 / 0.42
PLFY-P50VLMD-E			0.51 / 0.54	0.020	0.41 / 0.43
PLFY-P63VLMD-E			0.61 / 0.64	0.020	0.49 / 0.51
PLFY-P80VLMD-E			0.90 / 0.93	0.020	0.72 / 0.74
PLFY-P100VLMD-E			0.94 / 1.10	0.030	0.75 / 0.88
PLFY-P125VLMD-E			1.69 / 1.69	0.078x2	1.35 / 1.35

PEFY-P-VMR-E-L/R	Power supply			IFM	
	Volts / Hz	Range +-10%	MCA(A) (50 / 60Hz)	Output(kW)	FLA(A) (50 / 60Hz)
PEFY-P20VMR-E-L/R	220-240V / 50Hz 220-230V / 60Hz	Max.: 264V Min.: 198V	0.37 / 0.37	0.018	0.29 / 0.29
PEFY-P25VMR-E-L/R			0.37 / 0.37	0.018	0.29 / 0.29
PEFY-P32VMR-E-L/R			0.43 / 0.48	0.023	0.34 / 0.38

PEFY-P-VMS1-E	Power supply			IFM	
	Volts / Hz	Range +-10%	MCA(A) (50 / 60Hz)	Output(kW)	FLA(A) (50 / 60Hz)
PEFY-P15VMS1-E	220-240V / 50Hz 220-240V / 60Hz	Max.: 264V Min.: 198V	0.63 / 0.63	0.096	0.50 / 0.50
PEFY-P20VMS1-E			0.70 / 0.70	0.096	0.56 / 0.56
PEFY-P25VMS1-E			0.75 / 0.75	0.096	0.60 / 0.60
PEFY-P32VMS1-E			0.75 / 0.75	0.096	0.60 / 0.60
PEFY-P40VMS1-E			0.83 / 0.82	0.096	0.66 / 0.65
PEFY-P50VMS1-E			1.02 / 1.00	0.096	0.81 / 0.80
PEFY-P63VMS1-E			1.08 / 1.07	0.096	0.86 / 0.85

Symbols: MCA : Min.Circuit Amps (=1.25xFLA) FLA : Full Load Amps
IFM :Indoor Fan Motor Output : Fan motor rated output

PEFY-P-VMS1L-E	Power supply			IFM	
	Volts / Hz	Range +-10%	MCA(A) (50 / 60Hz)	Output(kW)	FLA(A) (50 / 60Hz)
PEFY-P15VMS1L-E	220-240V / 50Hz 220-240V / 60Hz	Max.: 264V Min.: 198V	0.46 / 0.46	0.096	0.37 / 0.37
PEFY-P20VMS1L-E			0.54 / 0.54	0.096	0.43 / 0.43
PEFY-P25VMS1L-E			0.59 / 0.59	0.096	0.47 / 0.47
PEFY-P32VMS1L-E			0.59 / 0.59	0.096	0.47 / 0.47
PEFY-P40VMS1L-E			0.68 / 0.68	0.096	0.54 / 0.54
PEFY-P50VMS1L-E			0.84 / 0.84	0.096	0.67 / 0.67
PEFY-P63VMS1L-E			0.91 / 0.91	0.096	0.73 / 0.73

PEFY-P-VMH-E	Power supply			IFM	
	Volts / Hz	Range +-10%	MCA(A) (50 / 60Hz)	Output(kW)	FLA(A) (50 / 60Hz)
PEFY-P40VMH-E	220-240V / 50Hz 220-240V / 60Hz	Max.: 264V Min.: 198V	1.21 / 1.61	0.08	0.97 / 1.29
PEFY-P50VMH-E			1.21 / 1.61	0.08	0.97 / 1.29
PEFY-P63VMH-E			1.49 / 1.95	0.12	1.19 / 1.56
PEFY-P71VMH-E			1.58 / 2.18	0.14	1.26 / 1.74
PEFY-P80VMH-E			1.85 / 2.40	0.18	1.48 / 1.92
PEFY-P100VMH-E			3.03 / 3.93	0.26	2.42 / 3.14
PEFY-P125VMH-E			3.03 / 3.93	0.26	2.42 / 3.14
PEFY-P140VMH-E			3.10 / 3.98	0.26	2.48 / 3.18
PEFY-P200VMH-E	380-415V / 50Hz 380-415V / 60Hz	Max.: 456V Min.: 342V	2.03 / 2.33	0.76	1.62 / 1.86
PEFY-P250VMH-E			2.50 / 2.88	1.08	2.00 / 2.30

PEFY-P-VMA-E	Power supply			IFM	
	Volts / Hz	Range +-10%	MCA(A)	Output(kW)	FLA(A)
PEFY-P20VMA-E	220-240V / 50Hz 220-240V / 60Hz	Max.: 264V Min.: 198V	1.03	0.085	0.82
PEFY-P25VMA-E			1.03	0.085	0.82
PEFY-P32VMA-E			1.18	0.085	0.95
PEFY-P40VMA-E			1.43	0.085	1.14
PEFY-P50VMA-E			1.54	0.085	1.23
PEFY-P63VMA-E			2.22	0.121	1.78
PEFY-P71VMA-E			2.46	0.121	1.97
PEFY-P80VMA-E			2.47	0.121	1.98
PEFY-P100VMA-E			3.30	0.244	2.64
PEFY-P125VMA-E			3.39	0.244	2.71
PEFY-P140VMA-E			3.29	0.244	2.63

PEFY-P-VMAL-E	Power supply			IFM	
	Volts / Hz	Range +-10%	MCA(A)	Output(kW)	FLA(A)
PEFY-P20VMAL-E	220-240V / 50Hz 220-240V / 60Hz	Max.: 264V Min.: 198V	0.92	0.085	0.74
PEFY-P25VMAL-E			0.92	0.085	0.74
PEFY-P32VMAL-E			1.07	0.085	0.86
PEFY-P40VMAL-E			1.32	0.085	1.06
PEFY-P50VMAL-E			1.40	0.085	1.12
PEFY-P63VMAL-E			2.08	0.121	1.67
PEFY-P71VMAL-E			2.32	0.121	1.86
PEFY-P80VMAL-E			2.36	0.121	1.89
PEFY-P100VMAL-E			3.19	0.244	2.55
PEFY-P125VMAL-E			3.27	0.244	2.62
PEFY-P140VMAL-E			3.17	0.244	2.53

PEFY-P-VMH-E-F	Power supply			IFM	
	Volts / Hz	Range +-10%	MCA(A) (50 / 60Hz)	Output(kW)	FLA(A) (50 / 60Hz)
PEFY-P80VMH-E-F	220-240V / 50Hz 208-230V / 60Hz	Max.: 264V Min.: 187V	0.92 / 1.15	0.09	0.73 / 0.92
PEFY-P140VMH-E-F			1.58 / 1.84	0.14	1.26 / 1.47
PEFY-P200VMH-E-F	380-415V / 50Hz 380-415V / 60Hz	Max.: 456V Min.: 342V	0.73 / 0.93	0.20	0.58 / 0.74
PEFY-P250VMH-E-F			0.85 / 1.08	0.23	0.68 / 0.86

Symbols: MCA : Min.Circuit Amps (=1.25xFLA) FLA : Full Load Amps
IFM :Indoor Fan Motor Output : Fan motor rated output

PKFY-P-VBM-E	Power supply			IFM	
	Volts / Hz	Range +-10%	MCA(A)	Output(kW)	FLA(A)
PKFY-P15VBM-E	220-240V / 50Hz 220V / 60Hz	Max.: 264V Min.: 198V	0.25	0.017	0.20
PKFY-P20VBM-E			0.25	0.017	0.20
PKFY-P25VBM-E			0.25	0.017	0.20

PKFY-P-VHM-E	Power supply			IFM	
	Volts / Hz	Range +-10%	MCA(A)	Output(kW)	FLA(A)
PKFY-P32VHM-E	220-240V / 50Hz 220V / 60Hz	Max.: 264V Min.: 198V	0.38	0.030	0.30
PKFY-P40VHM-E			0.38	0.030	0.30
PKFY-P50VHM-E			0.38	0.030	0.30

PKFY-P-VKM-E	Power supply			IFM	
	Volts / Hz	Range +-10%	MCA(A)	Output(kW)	FLA(A)
PKFY-P63VKM-E	220-240V / 50Hz 220V / 60Hz	Max.: 264V Min.: 198V	0.36	0.056	0.29
PKFY-P100VKM-E			0.63	0.056	0.50

PCFY-P-VKM-E	Power supply			IFM	
	Volts / Hz	Range +-10%	MCA(A)	Output(kW)	FLA(A)
PCFY-P40VKM-E	220-240V / 50Hz 220V / 60Hz	Max.: 264V Min.: 198V	0.35	0.090	0.28
PCFY-P63VKM-E			0.41	0.095	0.33
PCFY-P100VKM-E			0.81	0.160	0.65
PCFY-P125VKM-E			0.95	0.160	0.76

PFFY-P-VKM-E	Power supply			IFM	
	Volts / Hz	Range +-10%	MCA(A)	Output(kW)	FLA(A)
PFFY-P20VKM-E	220-240V / 50Hz	Max.: 264V Min.: 198V	0.25	0.03x2	0.20
PFFY-P25VKM-E			0.25	0.03x2	0.20
PFFY-P32VKM-E			0.25	0.03x2	0.20
PFFY-P40VKM-E			0.30	0.03x2	0.24

PFFY-P-VLEM-E	Power supply			IFM	
	Volts / Hz	Range +-10%	MCA(A) (50 / 60Hz)	Output(kW)	FLA(A) (50 / 60Hz)
PFFY-P20VLEM-E	220-240V / 50Hz 208-230V / 60Hz	Max.: 264V Min.: 187V	0.24 / 0.31	0.015	0.19 / 0.25
PFFY-P25VLEM-E			0.24 / 0.31	0.015	0.19 / 0.25
PFFY-P32VLEM-E			0.36 / 0.38	0.018	0.29 / 0.30
PFFY-P40VLEM-E			0.40 / 0.41	0.030	0.32 / 0.33
PFFY-P50VLEM-E			0.50 / 0.51	0.035	0.40 / 0.41
PFFY-P63VLEM-E			0.58 / 0.59	0.050	0.46 / 0.47

Symbols: MCA : Min.Circuit Amps (=1.25xFLA) FLA : Full Load Amps
IFM :Indoor Fan Motor Output : Fan motor rated output

PFFY-P-VLRM-E	Power supply			IFM	
	Volts / Hz	Range +-10%	MCA(A) (50 / 60Hz)	Output(kW)	FLA(A) (50 / 60Hz)
PFFY-P20VLRM-E	220-240V / 50Hz 208-230V / 60Hz	Max.: 264V Min.: 187V	0.24 / 0.31	0.015	0.19 / 0.25
PFFY-P25VLRM-E			0.24 / 0.31	0.015	0.19 / 0.25
PFFY-P32VLRM-E			0.36 / 0.38	0.018	0.29 / 0.30
PFFY-P40VLRM-E			0.40 / 0.41	0.030	0.32 / 0.33
PFFY-P50VLRM-E			0.50 / 0.51	0.035	0.40 / 0.41
PFFY-P63VLRM-E			0.58 / 0.59	0.050	0.46 / 0.47

PFFY-P-VLRMM-E	Power supply			IFM	
	Volts / Hz	Range +-10%	MCA(A) (50 / 60Hz)	Output(kW)	FLA(A) (50 / 60Hz)
PFFY-P20VLRMM-E	220-240V / 50Hz	Max.: 264V Min.: 198V	0.59 / 0.58	0.096	0.47 / 0.46
PFFY-P25VLRMM-E			0.59 / 0.58	0.096	0.47 / 0.46
PFFY-P32VLRMM-E			0.69 / 0.69	0.096	0.55 / 0.55
PFFY-P40VLRMM-E			0.78 / 0.76	0.096	0.62 / 0.61
PFFY-P50VLRMM-E			0.80 / 0.79	0.096	0.64 / 0.63
PFFY-P63VLRMM-E			0.93 / 0.93	0.096	0.74 / 0.74

GUF-RDH3	Power supply			IFM	
	Volts / Hz	Range +-10%	MCA(A) (50 / 60Hz)	Output(kW)	FLA(A) (50 / 60Hz)
GUF-50RD(H)3	220-240V / 50Hz 220V / 60Hz	Max.: 264V Min.: 198V	1.85 / 1.85	0.081x2	1.48 / 1.48
GUF-100RD(H)3			3.49 / 3.49	0.16x2	2.79 / 2.79

1-2-2. Electrical characteristics of Outdoor unit at cooling mode

PURY-P-YHM	Unit Combination	Units			Power supply	Compressor		FAN	RLA (A) (50 / 60Hz)	
		Hz	Volts	Voltage range	MCA(A)	Output (kW)	SC (A)	Output (kW)	Cooling	Heating
PURY-P200YHM-A(-BS)	-	50/60	380 400 415	Max : 456V Min : 342V	16.01	5.4	8	0.92	9.7/9.2/8.9	10.3/9.8/9.4
PURY-P250YHM-A(-BS)	-				18.59	6.7		0.92	13.0/12.3/11.9	13.2/12.5/12.1
PURY-P300YHM-A(-BS)	-				22.31	8.2		0.92	15.6/14.8/14.2	16.1/15.3/14.8
PURY-P350YHM-A(-BS)	-				30.03	10.3		0.92	21.0/19.9/19.2	21.0/19.9/19.2
PURY-P400YHM-A(-BS)	-				33.04	10.5		0.92	23.1/22.0/21.2	23.1/21.9/21.1
PURY-P450YSHM-A(-BS)	PURY-P250YHM-A(-BS)				34.04	6.7		0.92	23.8/22.6/21.8	24.8/23.5/22.7
	PURY-P200YHM-A(-BS)					5.4		0.92		
PURY-P500YSHM-A(-BS)	PURY-P250YHM-A(-BS)				40.33	6.7		0.92	28.2/26.8/25.8	28.3/26.9/25.9
	PURY-P250YHM-A(-BS)					6.7		0.92		
PURY-P550YSHM-A(-BS)	PURY-P300YHM-A(-BS)				45.05	8.2		0.92	31.5/29.9/28.8	31.7/30.1/29.0
	PURY-P250YHM-A(-BS)					6.7		0.92		
PURY-P600YSHM-A(-BS)	PURY-P300YHM-A(-BS)				47.34	8.2		0.92	33.1/31.4/30.3	35.1/33.4/32.1
	PURY-P300YHM-A(-BS)					8.2		0.92		
PURY-P650YSHM-A(-BS)	PURY-P350YHM-A(-BS)				54.92	10.3		0.92	38.4/36.5/35.2	38.0/36.1/34.8
	PURY-P300YHM-A(-BS)					8.2		0.92		
PURY-P700YSHM-A(-BS)	PURY-P400YHM-A(-BS)				59.64	10.5		0.92	41.7/39.6/38.2	41.0/38.9/37.5
	PURY-P300YHM-A(-BS)					8.2		0.92		
PURY-P750YSHM-A(-BS)	PURY-P400YHM-A(-BS)				67.21	10.5		0.92	47.0/44.6/43.0	44.4/42.2/40.7
	PURY-P350YHM-A(-BS)					10.3		0.92		
PURY-P800YSHM-A(-BS)	PURY-P400YHM-A(-BS)				71.79	10.5		0.92	50.2/47.7/45.9	46.6/44.3/42.7
	PURY-P400YHM-A(-BS)					10.5		0.92		

PURY-EP-YHM	Unit Combination	Units			Power supply	Compressor		FAN	RLA (A) (50 / 60Hz)	
		Hz	Volts	Voltage range	MCA(A)	Output (kW)	SC (A)	Output (kW)	Cooling	Heating
PURY-EP200YHM-A(-BS)	-	50/60	380 400 415	Max : 456V Min : 342V	16.01	5.4	8	0.92	8.8/8.3/8.0	9.8/9.3/8.9
PURY-EP250YHM-A(-BS)	-				16.45	6.7		0.92	11.5/11.0/10.6	12.8/12.1/11.7
PURY-EP300YHM-A(-BS)	-				20.02	8.0		0.92	14.0/13.3/12.8	15.8/15.0/14.4
PURY-EP400YSHM-A(-BS)	PURY-EP200YHM-A(-BS)				25.46	5.4		0.92	17.8/16.9/16.3	19.8/18.8/18.1
	PURY-EP200YHM-A(-BS)					5.4		0.92		
PURY-EP450YSHM-A1 (-BS)	PURY-EP250YHM-A(-BS)				29.03	6.7		0.92	20.3/19.3/18.6	22.3/21.2/20.4
	PURY-EP200YHM-A(-BS)					5.4		0.92		
PURY-EP500YSHM-A(-BS)	PURY-EP300YHM-A(-BS)				33.04	8.0		0.92	23.1/21.9/21.1	25.8/24.5/23.6
	PURY-EP200YHM-A(-BS)					5.4		0.92		
PURY-EP550YSHM-A1 (-BS)	PURY-EP300YHM-A(-BS)				37.33	8.0		0.92	26.1/24.8/23.9	28.6/27.1/26.2
	PURY-EP250YHM-A(-BS)					6.7		0.92		
PURY-EP600YSHM-A(-BS)	PURY-EP300YHM-A(-BS)				40.90	8.0		0.92	28.6/27.2/26.2	32.2/30.6/29.5
	PURY-EP300YHM-A(-BS)					8.0		0.92		

System R2

1-2-3. Electrical characteristics of BC controller

Symbols: MCA : Max. Circuit Amps (=1.25 x max. RLA), MFA : Max. Fuse Amps, RLA : Rated Load Amps

BC controller	Power supply					RLA(A)
	Hz	Volts	Range+-10%	MCA(A)	MFA(A)	
CMB-P104V-G1	50/60	220	Max.: 264V Min.: 198V	0.45	15	0.31
		230				0.34
		240				0.36
CMB-P105V-G1		220		0.55		0.38
		230				0.41
		240				0.44
CMB-P106V-G1		220		0.65		0.45
		230				0.48
		240				0.52
CMB-P108V-G1		220		0.85		0.58
		230				0.63
		240				0.68
CMB-P1010V-G1		220		1.04		0.71
		230				0.77
		240				0.83
CMB-P1013V-G1		220		1.34		0.92
		230				1.00
		240				1.07
CMB-P1016V-G1		220		1.63		1.12
		230				1.22
		240				1.30
CMB-P108V-GA1		220		0.85		0.58
		230				0.63
		240				0.68
CMB-P1010V-GA1		220		1.04		0.71
		230				0.77
		240				0.83
CMB-P1013V-GA1		220		1.34		0.92
		230				1.00
		240				1.07
CMB-P1016V-GA1		220		1.63		1.12
		230				1.22
		240				1.30
CMB-P1016V-HA1		220		1.63		1.12
		230				1.22
		240				1.30
CMB-P104V-GB1		220		0.40		0.28
		230				0.30
		240				0.32
CMB-P108V-GB1		220		0.79		0.55
		230				0.59
		240				0.63
CMB-P1016V-HB1		220		1.58		1.08
		230				1.17
		240				1.26

1-3. Power cable specifications

Thickness of wire for main power supply, capacities of the switch and system impedance

	Model	Minimum wire thickness (mm^2)			Breaker for current leakage	Local swtich (A)		Breaker for wiring (NFB) (A)	Max..Permissive System Impedance
		Main cable	Branch	Ground		Capacity	Fuse		
Outdoor unit	PURY-(E)P200YHM	4.0	-	4.0	30A 100mA 0.1sec. or less	25	25	30	*1
	PURY-(E)P250YHM	4.0	-	4.0	30A 100mA 0.1sec. or less	32	32	30	*1
	PURY-(E)P300YHM	4.0	-	4.0	30A 100mA 0.1sec. or less	32	32	30	*1
	PURY-P350YHM	6.0	-	6.0	40A 100mA 0.1sec. or less	40	40	40	0.27Ω
	PURY-P400YHM	10.0	-	10.0	60A 100mA 0.1sec. or less	63	63	60	0.26Ω
Total operating current of the indoor unit	16A or less BC controller	1.5	1.5	1.5	20A 30mA 0.1sec. or less	16	16	20	(apply to IEC61000-3-3)
	25A or less	2.5	2.5	2.5	30A 30mA 0.1sec. or less	25	25	30	(apply to IEC61000-3-3)
	32A or less	4.0	4.0	4.0	40A 30mA 0.1sec. or less	32	32	40	(apply to IEC61000-3-3)

*1: Meet technical requirements of IEC61000-3-3

1. Use dedicated power supplies for the outdoor unit and indoor unit. Ensure OC and OS are wired individually.
2. Bear in mind ambient conditions (ambient temperature,direct sunlight, rain water,etc.) when proceeding with the wiring and connections.
3. The wire size is the minimum value for metal conduit wiring. If the voltage drops, use a wire that is one rank thicker in diameter.
   Make sure the power-supply voltage does not drop more than 10%.
4. Specific wiring requirements should adhere to the wiring regulations of the region.
5. Power supply cords of parts of appliances for outdoor use shall not be lighter than polychloroprene sheathed flexible cord (design 245 IEC57). For example, use wiring such as YZW.
6. A switch with at least 3 mm contact separation in each pole shall be provided by the Air Conditioner installer.

System R2

⚠WARNING

- Be sure to use specified wires for connections and ensure no external force is imparted to terminal connections. If connections are not fixed firmly, heating or fire may result.
- Be sure to use the appropriate type of overcurrent protection switch. Note that generated overcurrent may include some amount of direct current.

⚠CAUTION

- Some installation sites may require attachment of an earth leakage breaker for the inverter. If no earth leakage breaker is installed, there is a danger of electric shock.
- Do not use anything other than a breaker and fuse with the correct capacity. Using a fuse or wire of too large capacity may cause malfunction or fire.

Note

- This device is intended for the connection to a power supply system with a maximum permissible system impedance shown in the above table at the interface point (power service box) of the user's supply.
- The user must ensure that this device is connected only to a power supply system which fulfils the requirement above.
  If necessary, the user can ask the public power supply company for the system impedance at the interface point.
- This equipment complies with IEC 61000-3-12 provided that the short-circuit power Ssc is greater than or equal to Ssc(*2) at the interface point between the user's supply and the public system. It is the responsibility of the installer or user of the equipment to ensure, by consultation with the distribution network operator if necessary, that the equipment is connected only to a supply with a short-circuit power Ssc greater than or equal to Ssc(*2).

Ssc(*2)

Model	Ssc(MVA)
PURY-(E)P200YHM	1.14
PURY-(E)P250YHM	1.26
PURY-(E)P300YHM	1.57
PURY-P350YHM	2.00
PURY-P400YHM	2.12

1-4. Power supply examples

1-4-1.PURY-P200-400YHM-A,PURY-EP200-300YHM-A

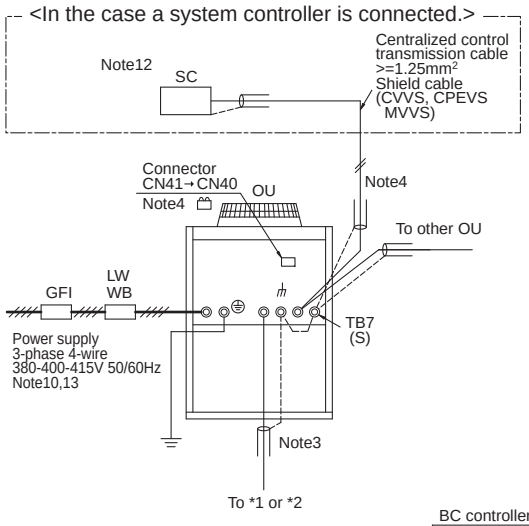

Note:
1 The transmission cable is not-polarity double-wire.
2 Symbol ◎ means a screw terminal for wiring.
3 The shield wire of transmission cable should be connected to the grounding terminal at Outdoor unit. All shield wire of M-Net transmission cable among Indoor units should be connected to the S terminal at Indoor unit or all shield wire should be connected together. The broken line at the scheme means shield wire.
4 When the Outdoor unit connected with system controller, power-supply to TB7 of the outdoor unit(s) is needed. The connector change from CN41 to CN40 at one of the outdoor units will enable the outdoor unit to supply power to TB7, or an extra power supplying unit PAC-SC51KUA should be used. The transmission cable (above 1.25mm^2, shielded, CVVS/CPEVS/MVVS) among Outdoor units and system controllers is called centralized control transmission cable. The shield wire of the centralized control transmission cable must be grounded at the Outdoor unit whose CN41 is changed to CN40.
5 MA R/C transmission cable (0.3-1.25mm^2) must be less than 200m in length, while ME R/C transmission cable (0.3-1.25mm^2) must be less than 10m in length. But transmission cable to the ME R/C can be extend using a M-NET cable (>=1.25mm^2) when the length is counted in the M-Net length. Both Compact MA and ME R/C transmission cables size 0.75~1.25mm^2 in thickness.
6 MA remote controller and ME remote controller should not be grouped together.
7 If using 1 or 2 (main/sub) MA remote controller to control more than 1 Indoor unit, use MA transmission cable to connect all the TB15 terminals of the Indoor units. It is called "Grouping".
If using 1 or 2 (main/sub) ME remote controller control more than 1 indoor unit, set address to Indoor unit and ME remote controller. For the method, refer to 2-4. "Address Setting".
8 Indoor board consumes power from TB3. The power balance should be considered according to System Design 2-3 "System configuration restrictions".
9 If Transmission booster is needed, be sure to connect the shield wires to the both sides to the booster.
10 The critical current for choosing power source equipment is approximate 1.4 times of total rated current of the Outdoor unit(s) or Indoor unit(s).
11 Numbers shown with ( ) indicates a diameter of the compact remote controller.
12 When System controller (SC) is connected to the system, turn the SW2-1 on.
13 The phases of electricity power must be confirmed to be right used. Phase-reverse, or phase-missing could break the controllers.

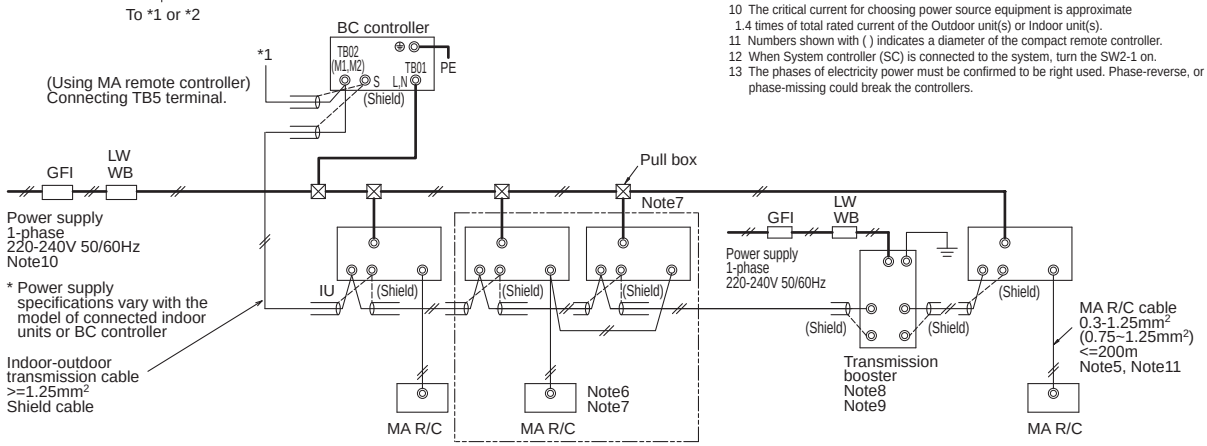

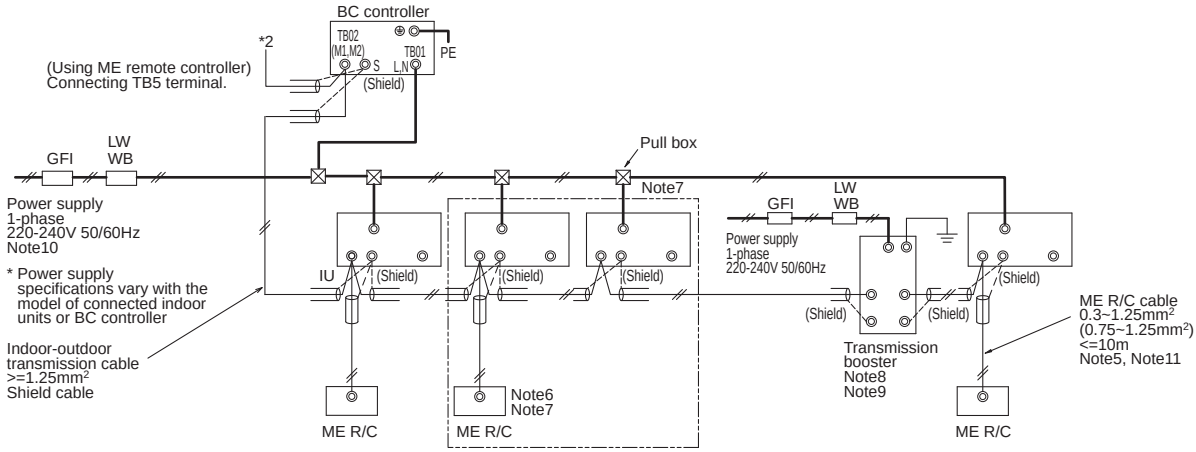

Symbol		Model	Ground-fault interrupter *1, *2	Local switch BKC <A>	Local switch OCP*3 <A>	Wiring breaker (NFB) <A>	Minimum Wire thickness Power wire <mm2>	Minimum Wire thickness Earth wire <mm2>
GFI	Ground-fault interrupter	PURY-(E)P200YHM	30A 100mA 0.1sec. or less	25	25	30	4	4
LW	Local switch	PURY-(E)P250YHM	30A 100mA 0.1sec. or less	32	32	30	4	4
BKC	Breaker capacity	PURY-(E)P300YHM	30A 100mA 0.1sec. or less	32	32	30	4	4
OCP	Over-current protector	PURY-P350YHM	40A 100mA 0.1sec. or less	40	40	40	6	6
WB	Wiring breaker	PURY-P400YHM	60A 100mA 0.1sec. or less	63	63	60	10.0	10.0
NFB	Non-fuse breaker							
OU	Outdoor unit							
IU	Indoor unit							
SC	System controller							
MA R/C	MA remote controller							
ME R/C	ME remote controller							

*1 The Ground-fault interrupter should support Inverter circuit. (e.g. Mitsubishi Electric's NV-C series or equivalent).
*2 Ground-fault interrupter should combine using of local switch or wiring breaker.
*3 It shows data for B-type fuse of the breaker for current leakage.

1-4-2.PURY-P450-800YSHM-A,PURY-EP400-600YSHM-A(1)

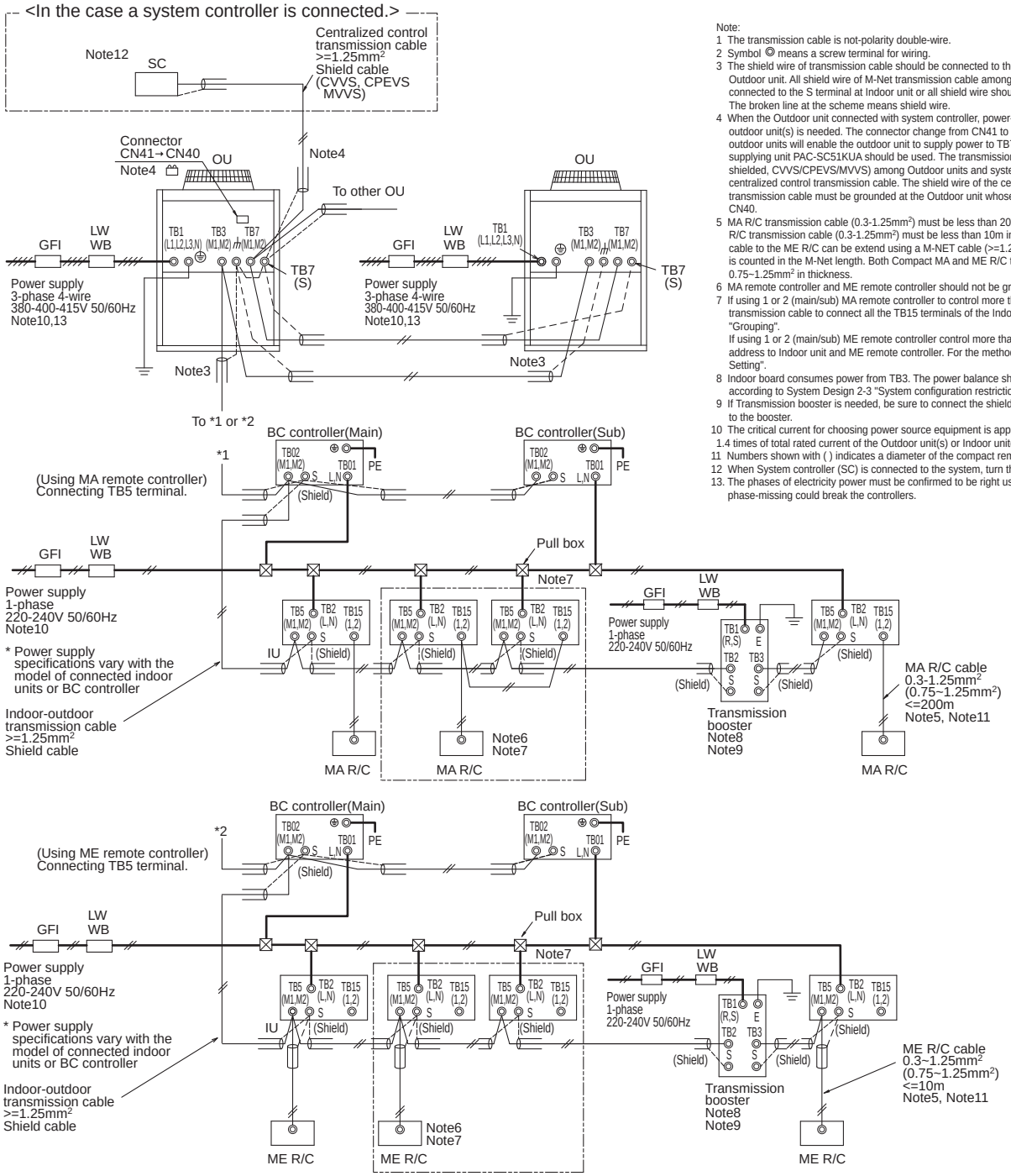

Note:
1 The transmission cable is not-polarity double-wire.
2 Symbol ◎ means a screw terminal for wiring.
3 The shield wire of transmission cable should be connected to the grounding terminal at Outdoor unit. All shield wire of M-Net transmission cable among Indoor units should be connected to the S terminal at Indoor unit or all shield wire should be connected together. The broken line at the scheme means shield wire.
4 When the Outdoor unit connected with system controller, power-supply to TB7 of the outdoor unit(s) is needed. The connector change from CN41 to CN40 at one of the outdoor units will enable the outdoor unit to supply power to TB7, or an extra power supplying unit PAC-SC51KUA should be used. The transmission cable (above 1.25mm^2, shielded, CVVS/CPEVS/MVVS) among Outdoor units and system controllers is called centralized control transmission cable. The shield wire of the centralized control transmission cable must be grounded at the Outdoor unit whose CN41 is changed to CN40.
5 MA R/C transmission cable (0.3-1.25mm^2) must be less than 200m in length, while ME R/C transmission cable (0.3-1.25mm^2) must be less than 10m in length. But transmission cable to the ME R/C can be extend using a M-NET cable (>=1.25mm^2) when the length is counted in the M-Net length. Both Compact MA and ME R/C transmission cables size 0.75~1.25mm^2 in thickness.
6 MA remote controller and ME remote controller should not be grouped together.
7 If using 1 or 2 (main/sub) MA remote controller to control more than 1 Indoor unit, use MA transmission cable to connect all the TB15 terminals of the Indoor units. It is called "Grouping".
If using 1 or 2 (main/sub) ME remote controller control more than 1 indoor unit, set address to Indoor unit and ME remote controller. For the method, refer to 2-4. "Address Setting".
8 Indoor board consumes power from TB3. The power balance should be considered according to System Design 2-3 "System configuration restrictions".
9 If Transmission booster is needed, be sure to connect the shield wires to the both sides to the booster.
10 The critical current for choosing power source equipment is approximate 1.4 times of total rated current of the Outdoor unit(s) or Indoor unit(s).
11 Numbers shown with ( ) indicates a diameter of the compact remote controller.
12 When System controller (SC) is connected to the system, turn the SW2-1 on.
13. The phases of electricity power must be confirmed to be right used. Phase-reverse, or phase-missing could break the controllers.

System R2

Symbol		Model	Ground-fault interrupter *1, *2	Local switch BCY <A>	Local switch OCP*3 <A>	Wiring breaker (NFB) <A>	Minimum Wire thickness Power wire <mm2>	Minimum Wire thickness Earth wire <mm2>
GFI	Ground-fault interrupter	PURY-(E)P200YHM	30A 100mA 0.1sec. or less	25	25	30	4	4
LW	Local switch	PURY-(E)P250YHM	30A 100mA 0.1sec. or less	32	32	30	4	4
BKC	Breaker capacity	PURY-(E)P300YHM	30A 100mA 0.1sec. or less	32	32	30	4	4
OCP	Over-current protector	PURY-P350YHM	40A 100mA 0.1sec. or less	40	40	40	6	6
WB	Wiring breaker	PURY-P400YHM	60A 100mA 0.1sec. or less	63	63	60	10.0	10.0
NFB	Non-fuse breaker							
OU	Outdoor unit							
IU	Indoor unit							
SC	System controller							
MA R/C	MA remote controller							
ME R/C	ME remote controller							

*1 The Ground-fault interrupter should support Inverter circuit. (e.g. Mitsubishi Electric's NV-C series or equivalent).
*2 Ground-fault interrupter should combine using of local switch or wiring breaker.
*3 It shows data for B-type fuse of the breaker for current leakage.

2-1. Transmission cable length limitation

2-1-1. Using MA Remote controller

Long transmission cable causes voltage down, therefore, the length limitation should be obeyed to secure proper transmission.

Max. length via Outdoor (M-NET cable)	L1+L2+L3+L4, L1+L2+L6+L7, L3+L4+L6+L7	<=500m[1640ft.]	1.25mm^2 [AWG16] or thicker
Max. length to Outdoor (M-NET cable)	L1+L8, L3+L4, L6, L2+L6+L8, L7	<=200m[656ft.]	1.25mm^2 [AWG16] or thicker
Max. length from MA to Indoor	a1+a2, a1+a2+a3+a4	<=200m[656ft.]	0.3-1.25 mm^2 [AWG22-16]
24VDC to AG-150A	n	<=50m[164ft.]	0.75-2.0 mm^2 [AWG18-14]

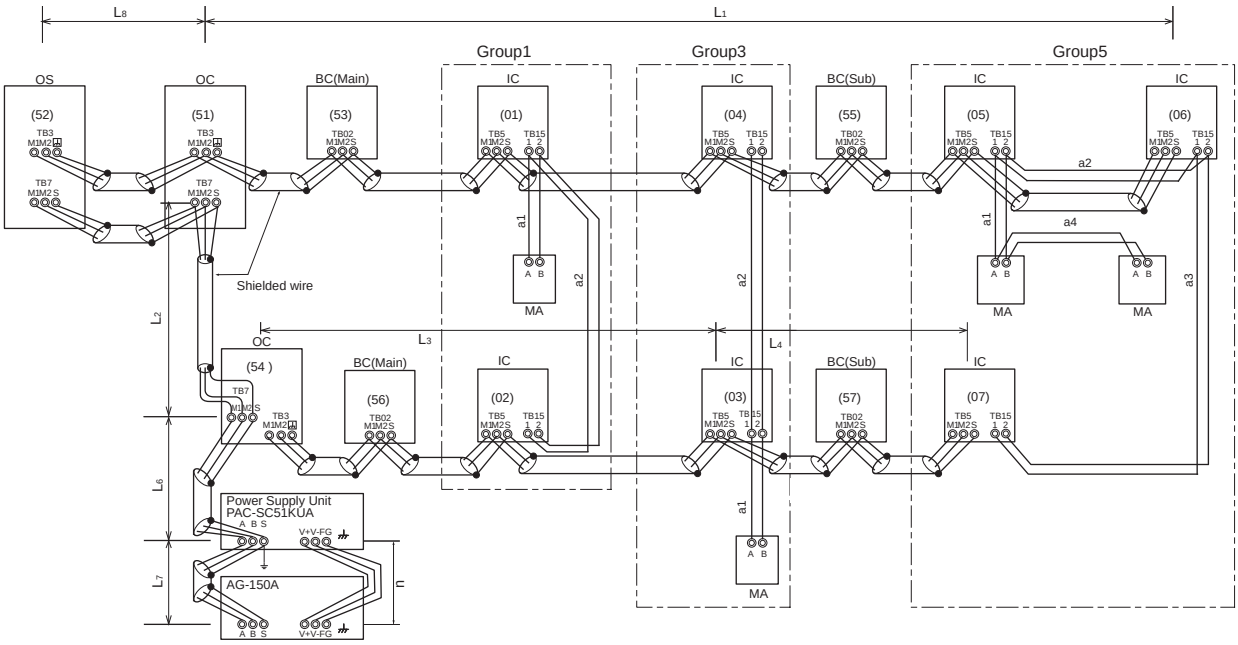

OC, OS : Outdoor unit controller; IC: Indoor unit controller; MA: MA remote controller

2-1-2. Using ME Remote controller

Long transmission cable causes voltage down, therefore, the length limitation should be obeyed to secure proper transmission.

Max. length via Outdoor (M-NET cable)	L1+L2+L3+L4, L1+L2+L6+L7,L1+L2+L3+L5, L3+L4+L6+L7	<=500m[1640ft.]	1.25mm^2 [AWG16] or thicker
Max. length to Outdoor (M-NET cable)	L1+L8, L3+L4, L6, L2+L6+L8, L7, L3+L5	<=200m[656ft.]	1.25mm^2 [AWG16] or thicker
Max. length from ME to Indoor	e1, e2+e3, e4	<=10m[32ft.]*1	0.3-1.25 mm^2 [AWG22-16] *1
24VDC to AG-150A	n	<=50m[164ft.]	0.75-2.0 mm^2 [AWG18-14]

*1. If the length from ME to Indoor exceed 10m, use 1.25 mm^2 [AWG16] shielded cable, but the total length should be counted into Max. length via Outdoor.

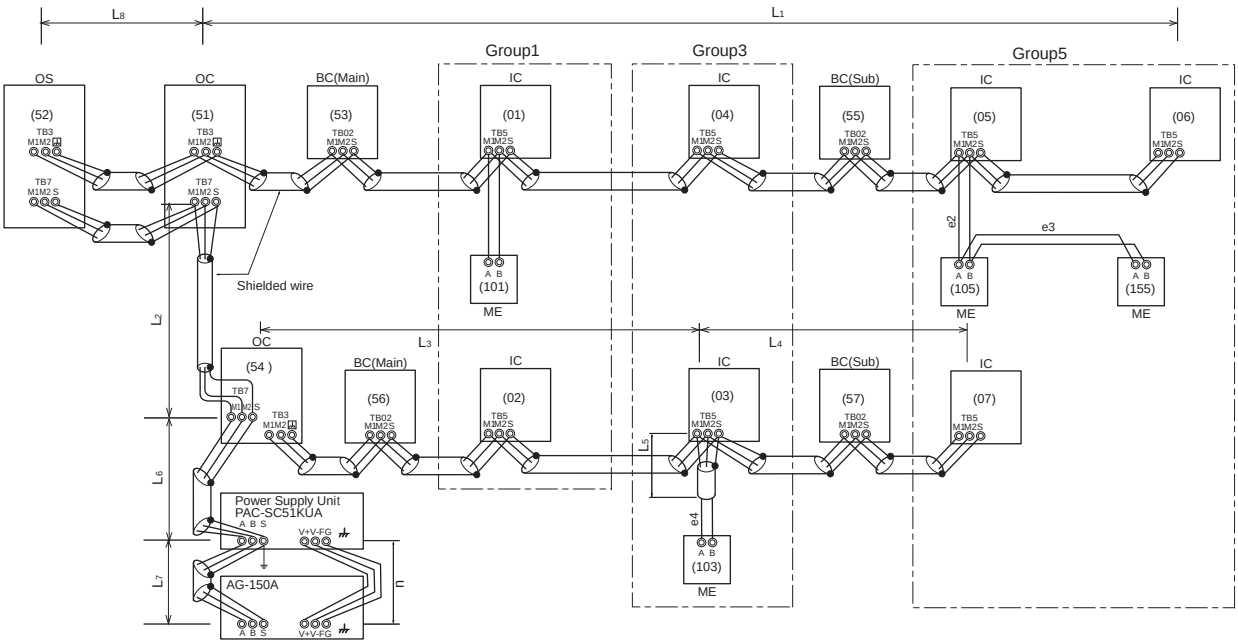

OC, OS: Outdoor unit controller; IC: Indoor unit controller; ME: ME remote controller

System R2

2-2. Transmission cable specifications

	Transmission cables (Li)	ME Remote controller cables	MA Remote controller cables
Type of cable	Shielding wire (2-core) CVVS, CPEVS or MVVS	Sheathed 2-core cable (unshielded) CVV	
Cable size	More than 1.25mm^2 [AWG16]	0.3～1.25mm^2 [AWG22～16] (0.75～1.25mm^2 [AWG18～16])*1	0.3～1.25mm^2 [AWG22～16] (0.75～1.25mm^2 [AWG18～16])*1
Remarks	—	When 10m [32ft] is exceeded, use cables with the same specification as transmission cables.	Max length : 200m [656ft]

*1 Connected with simple remote controller.

CVVS, MVVS : PVC insulated PVC jacketed shielded control cable
CPEVS : PE insulated PVC jacketed shielded communication cable
CVV : PV insulated PVC sheathed control cable

System R2

2-3. System configuration restrictions

2-3-1. Common restrictions for the CITYMULTI system

For each Outdoor unit, the maximum connectable quantity of Indoor unit is specified at its Specifications table.

A) 1 Group of Indoor units can have 1-16 Indoor units;
*OA processing unit GUF-RD(H) is considered as Indoor unit.

B) Maximum 2 remote controllers for 1 Group; (MA/ME remote controllers cannot be present together in 1group.)

C) 1 LOSSNAY unit can interlock maximum 16 Indoor units; 1 Indoor unit can interlock only 1 LOSSNAY unit.

D) Maximum 3 System controllers are connectable when connecting to TB3 of the Outdoor unit.

E) Maximum 3 System controllers are connectable when connecting to TB7 of the Outdoor unit, if the transmission power is supplied by the Outdoor unit.

F) 4 System controllers or more are connectable when connecting to TB7 of the Outdoor unit, if the transmission power is supplied by the power supply unit PAC-SC51KUA. Details refer to 2-3-3-C.
*System controller connected as described in D) and E) would have a risk that the failure of connected Outdoor unit would stop power supply to the System controller.

System R2

2-3-2. Ensuring proper communication power for M-NET

In order to ensure proper communication among Outdoor unit, Indoor unit, LOSSNAY, and OA processing unit GUF-RD(H), and Controllers, the transmission power situation for the M-NET should be observed. In some cases, Transmission booster should be used. Taking the power consumption of Indoor unit sized P20-P140 as 1, the equivalent power consumption or supply of others are listed at Table 2-3-1 and Table 2-3-2.

Table 2-3-1 The equivalent power consumption

Indoor, OA unit	Indoor unit	BC controller	MA RC. LOSSNAY	ME Remote Contr.	Timers, System Contr.		ON/OFF Contr.	MN Conrerter	
Sized P15-P140 GUF-50, 100	Sized P200,P250	CMB	PAR-21MAA PAC-YT51CRA(B) PAR-FA32MA LGH-RX-E PZ-60DR-E	PAR-F27MEA PAC-SE51CRA PZ-52SF-E	PAC-SC30GRA PAC-SF44SRA PAC-YT34STA AG-150A	GB-50A	PAC-YT40ANRA	CMS -MNF-B	CMS -MNG-E
1	7	2	0	1/4	1/2	3	1	1/2	2

*RC : Remote Controller

Table 2-3-2 The equivalent power supply

Transmission Booster	Power supply unit	Expansion controller	BM ADAPTER	Outdoor unit	Outdoor unit
PAC-SF46EPA	PAC-SC51KUA	PAC-YG50ECA	BAC-HD150	Connector TB3 and TB7 total *	Connector TB7 only
25	5	6	6	32	6

*If PAC-SC51KUA is used to supply power at TB7 side, no power supply need from Outdoor unit at TB7, Connector TB3 itself will therefore have 32. Not applicable to the PUMY model.

With the equivalent power consumption values in Table 2-3-1 and Table 2-3-2, PAC-SF46EPA can be designed into the air-conditioner system to ensure proper system communication according to 2-3-2-A, B, C.

2-3-2-A) Firstly, count from TB3 at TB3 side the total quantity of Indoor units, OA process units and ME remote controller, Timers and System controllers. If the total quantity reaches 40, a PAC-SF46EPA should be set. In this case, Indoor unit sized P200, 250 is counted as 7 Indoor units, but MA remote controller(s), LOSSNAY, PZ-60DR-E is NOT counted.

2-3-2-B) Secondly, count from TB7 side to TB3 side the total transmission power consumption. If the total power consumption reaches 32, a PAC-SF46EPAshould be set. Yet, if a PAC-SC51KUAis used to supply power at TB7 side, count from TB3 side only.

2-3-2-C) Thirdly, count from TB7 at TB7 side the total transmission power consumption, If the total power consumption reaches 6, a PAC-SF46EPA should be set.

■ System example

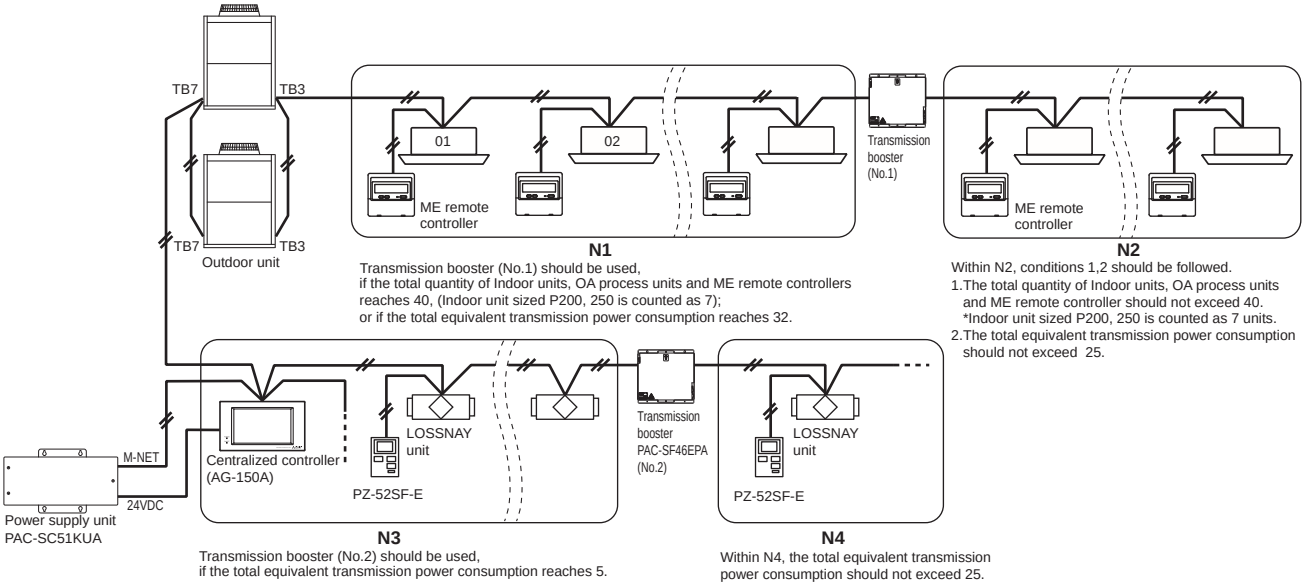

2-3-3. Ensuring proper power supply to System controller

The power to System controller (excluding LMAP02-E) is supplied via M-NET transmission line. M-NET transmission line at TB7 side is called Centralized control transmission line while one at TB3 side is called Indoor-Outdoor transmission line. There are 3 ways to supply power to the System controller .
A) Connecting to TB3 of the Outdoor unit and receiving power from the Outdoor unit.
B) Connecting to TB7 of the Outdoor unit and receiving power from the Outdoor unit.
C) Connecting to TB7 of the Outdoor unit but receiving power from power supply unit PAC-SC51KUA.

2-3-3-A. When connecting to TB3 of the Outdoor unit and receiving power from the Outdoor unit.

Maximum 3 System controllers can be connected to TB3.
If there is more than 1 Outdoor unit, it is necessary to replace power supply switch connector CN41 with CN40 on one Outdoor unit.

Fig. 2-3-3-A

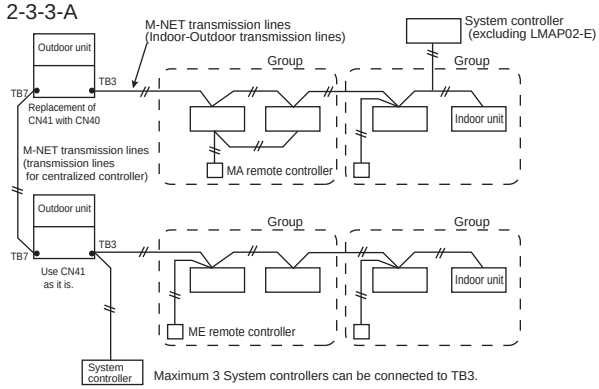

2-3-3-B. When connecting to TB7 of the Outdoor unit and receiving power from the Outdoor unit.

Maximum 3 System controllers can be connected to TB7 and receiving power from the Outdoor unit.
It is necessary to replace power supply switch connector CN41 with CN40 on one Outdoor unit.

Fig. 2-3-3-B

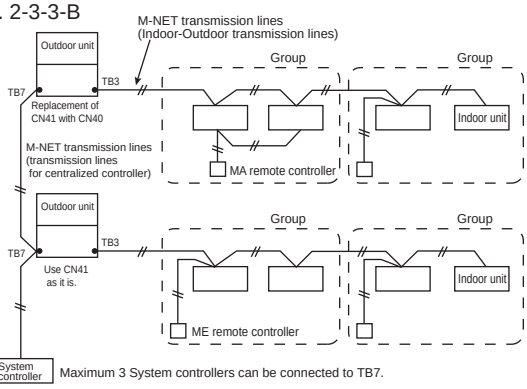

2-3-3-C. When connecting to TB7 of the Outdoor unit but receiving power from PAC-SC51KUA.

When using PAC-SC51KUA to supply transmission power, the power supply connector CN41 on the Outdoor units should be kept as it is. It is also a factory setting.
1 PAC-SC51KUA supports maximum 1 AG-150A unit due to the limited power 24VDC at its TB3.
However, 1 PAC-SC51KUA supplies transmission power at its TB2 equal to 5 Indoor units, which is referable at Table 2-3-2.
If PZ-52SF-E, Timers, System controller, ON/OFF controller connected to TB7 consume transmission power more than 5 (Indoor units), Transmission booster PAC-SF46EPA is needed. PAC-SF46EPA supplies transmission power equal to 25 Indoor units.

Fig. 2-3-3-C

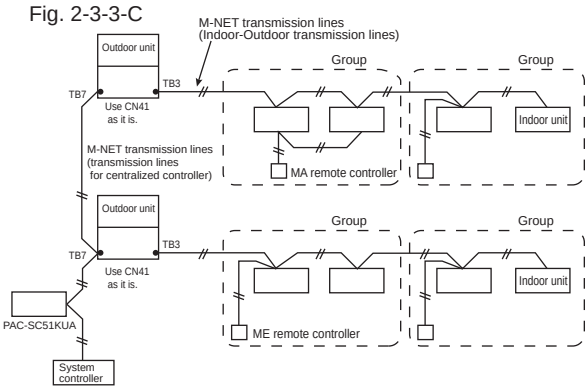

⚠ CAUTION

AG-150A*1 is recommended to connect to TB7 because it performs back-up to a number of data.
In an air conditioner system has more than 1 Outdoor units, AG-150A receiving transmission power through TB7 on one of the Outdoor units would have a risk that the connected Outdoor unit failure would stop power supply to AG-150A, and disrupt the whole system.
When applying apportioned electric power function, AG-150A is necessary to connected to TB7 and has its own power supply unit PAC-SC51KUA.*2
*1: AG-150A is an example model of system controllers.
*2: Power supply unit PAC-SC51KUA is for AG-150A.

2-3-4. Power supply to LM adapter LMAP02-E

1-phase 220-240V AC power supply is needed.
The power supply unit PAC-SC51KUA is not necessary when connecting only the LMAP02-E. Yet, make sure to change the power supply changeover connector CN41 to CN40 on the LM adapter.

2-3-5. Power supply to expansion controller

1-phase 100-240VAC power supply is needed.
The power supply unit PAC-SC51KUA is not necessary.
The expansion controller supplies power through TB3, which equals 6 indoor units. (refer to Table 2-3-2)

2-3-6. Power supply to BM ADAPTER

1-phase 100-240VAC power supply is needed.
The power supply unit PAC-SC51KUA is not necessary when only BM ADAPTER is connected.
Yet, make sure to move the power jumper from CN41 to CN40 on the BM ADAPTER.

2-4. Address setting

2-4-1. Switch operation

In order to constitute CITY MULTI in a complete system, switch operation for setting the unit address No. and connection No. is required.

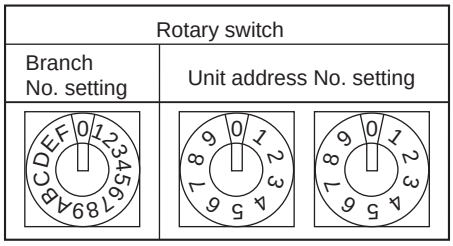

① Address No. of outdoor unit, indoor unit and remote controller.
The address No. is set at the address setting board.
In the case of R2 system, it is necessary to set the same No. at the branch No. switch of indoor unit as that of the BC controller connected. (When connecting two or more branches, use the lowest branch No.)

② Caution for switch operations

- Be sure to shut off power source before switch setting. If operated with power source on, switch can not operate properly.
- No units with identical unit address shall exist in one whole air conditioner system. If set erroneously, the system can not operate.

③ MA remote controller

- When connecting only one remote controller to one group, it is always the main remote controller.
  When connecting two remote controllers to one group, set one remote controller as the main remote controller and the other as the sub remote controller.
- The factory setting is "Main".

PAR-21MAA
The MA remote controller does not have the switches listed above.
Refer to the installation manual for the function setting.

PAC-YT51CRB

Setting the dip switches

There are switches on the front of the remote controller. Remote controller Main/Sub and other function settings are performed using these switches. Ordinarily, only change the Main/Sub setting of SW1.
(The factory settings are all "ON".)

SW No	SW contents Main	ON	OFF	Comment
1	Remote controller Main/Sub setting	Main	Sub	Set one of the two remote controllers at one group to "Main"
2	Temperature display units setting	Celsius	Fahrenheit	When the temperature is displayed in [Fahrenheit], set to "No".
3	Cooling/heating display in AUTO mode	Yes	No	When you do not want to display "Cooling" and "Heating" in the Auto mode, set to "No".

2-4-2. Rule of setting address

Unit		Address setting	Example	Note
Indoor unit		01 ~ 50	10 1	Use the most recent address within the same group of indoor units. Make the indoor units address connected to the BC controller (Sub) larger than the indoor units address connected to the BC controller (Main). If applicable, set the sub BC controllers in an PURY system in the following order: (1) Indoor unit to be connected to the BC controller (Main) (2) Indoor unit to be connected to the BC controller (No.1 Sub) (3) Indoor unit to be connected to the BC controller (No.2 Sub) Set the address so that (1)<(2)<(3)
Outdoor unit		51 ~ 99, 100 (Note1)	10 1	The smallest address of indoor unit in same refrigerant system + 50 Assign sequential address numbers to the outdoor units in one refrigerant circuit system. OC, OS1 and OS2 are automatically detected. (Note 2) ∗ Please reset one of them to an address between 51 and 99 when two addresses overlap. ∗ The address automatically becomes "100" if it is set as "01~ 50"
BC controller (Main)		52 ~ 99, 100	10 1	The address of outdoor unit + 1 ∗ Please reset one of them to an address between 51 and 99 when two addresses overlap. ∗ The address automatically becomes "100" if it is set as "01~ 50"
BC controller (Sub)		52 ~ 99, 100	10 1	Lowest address within the indoor units connected to the BC controller (Sub) plus 50.
Local remote controller	ME, LOSSNAY Remote controller (Main)	101 ~ 150	1 Fixed 10 1	The smallest address of indoor unit in the group + 100 ∗ The place of "100" is fixed to "1"
Local remote controller	ME, LOSSNAY Remote controller (Sub)	151 ~ 199, 200	1 Fixed 10 1	The address of main remote controller + 50 ∗ The address automatically becomes "200" if it is set as "00"
System controller	Group remote controller	201 ~ 250	2 Fixed 10 1	The smallest group No. to be managed + 200
System controller	System remote controller	000, 201 ~ 250	100 10 1	
System controller	ON/OFF remote controller	000, 201 ~ 250	100 10 1	The smallest group No. to be managed + 200 ∗ The smallest group No. to be managed is changeable.
System controller	AG-150A GB-50A	000, 201 ~ 250	0,2 0~5 0~9 100 10 1	
System controller	PAC-YG50ECA	000, 201 ~ 250	0,2 0~5 0~9 100 10 1	∗ Settings are made on the initial screen of AG-150A.
System controller	BAC-HD150	000, 201 ~ 250	0,2 0~5 0~9 100 10 1	∗ Settings are made with setting tool of BM ADAPTER.
System controller	LMAP02-E	201 ~ 250	2 Fixed 10 1	

Note1: To set the address to "100", set it to "50"
Note2: Outdoor units OC, OS1 and OS2 in one refrigerant circuit system are automatically detected.
OC, OS1 and OS2 are ranked in descending order of capacity. If units are the same capacity, they are ranked in ascending order of their address.

2-4-3. System examples

Factory setting

Original switch setting of the outdoors, indoors, controllers, LMAP and BM ADAPTER at shipment is as follows.

- Outdoor unit : Address: 00, CN41: U (Jumper), DipSW2-1: OFF
- Indoor unit : Address: 00
- BC controller : Address: 00
- ME remote controller : Address: 101
- LMAP : Address: 247, CN41: U (Jumper), DipSW1-2: OFF
- BM ADAPTER : Address: 00

Setting at the site

- DipSW2-1(Outdoor) : When the System Controller is used, all the Dip SW2-1 at the outdoor units should be set to "ON". * Dip SW2-1 remains OFF when only LMAP02-E is used.
- DipSW4-6(BC controller) : Set DipSW 4-6 to ON at BC controller, in case of connected Indoor unit sized P100-P140 with 2 ports. It is also possible to connect Indoor unit sized P100-P140 with 1 port (set DipSW 4-6 to OFF).
- DipSW1-2(LMAP) : When the LMAP is used together with System Controller, DipSW1-2 at the LMAP should be set to "ON".
- CN40/CN41 : Change jumper from CN41 to CN 40 at outdoor control board will activate central transmission power supply to TB7;
  (Change jumper at only one outdoor unit when activating the transmission power supply without using a power supply unit.)
  Change jumper from CN41 to CN 40 at LMAP will activate transmission power supply to LMAP itself;
  Power supply unit is recommended to use for a system having more than 1 outdoor unit, because the central transmission power supply from TB7 of one of outdoor units is risking that the outdoor unit failure may let down the whole system controller system.

System R2

2-4-3-1. MA remote controller, Single-refrigerant-system, No System Controller

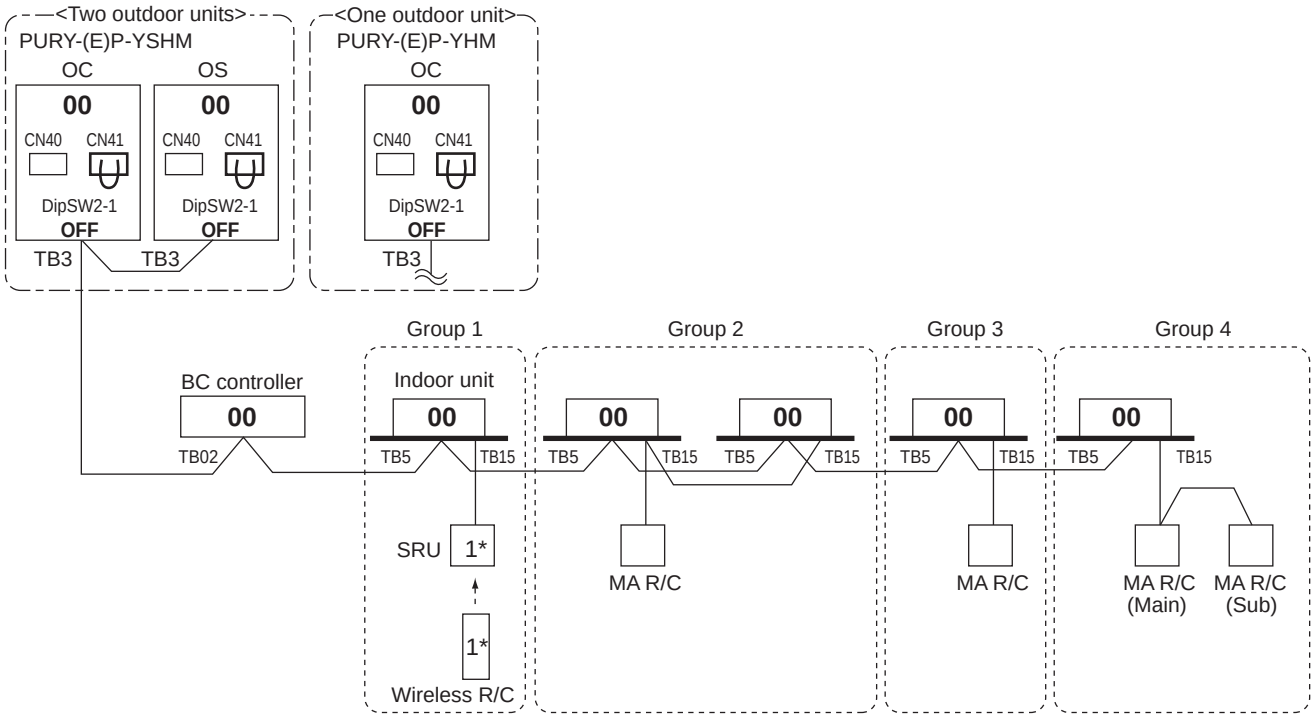

*1 For Wireless R/C and Signal receiver unit (SRU), channel 1, 2 and 3 are selectable and should be set to same channel.

NOTE:

1. Outdoor units OC and OS in one refrigerant circuit system are automatically detected.
   OC and OS are ranked in descending order of capacity. If units are the same capacity, they are ranked in ascending order of their address.
2. No address setting is needed.
3. For a system having more than 32 indoor unit (P15-P140), confirm the need of Booster at **2-3 "System configuration restrictions".**
4. Indoor units should be set with a branch number.
5. Address setting is required if a sub BC controller is connected.

2-4-3-2. MA remote controller, Single-refrigerant-system, System Controller

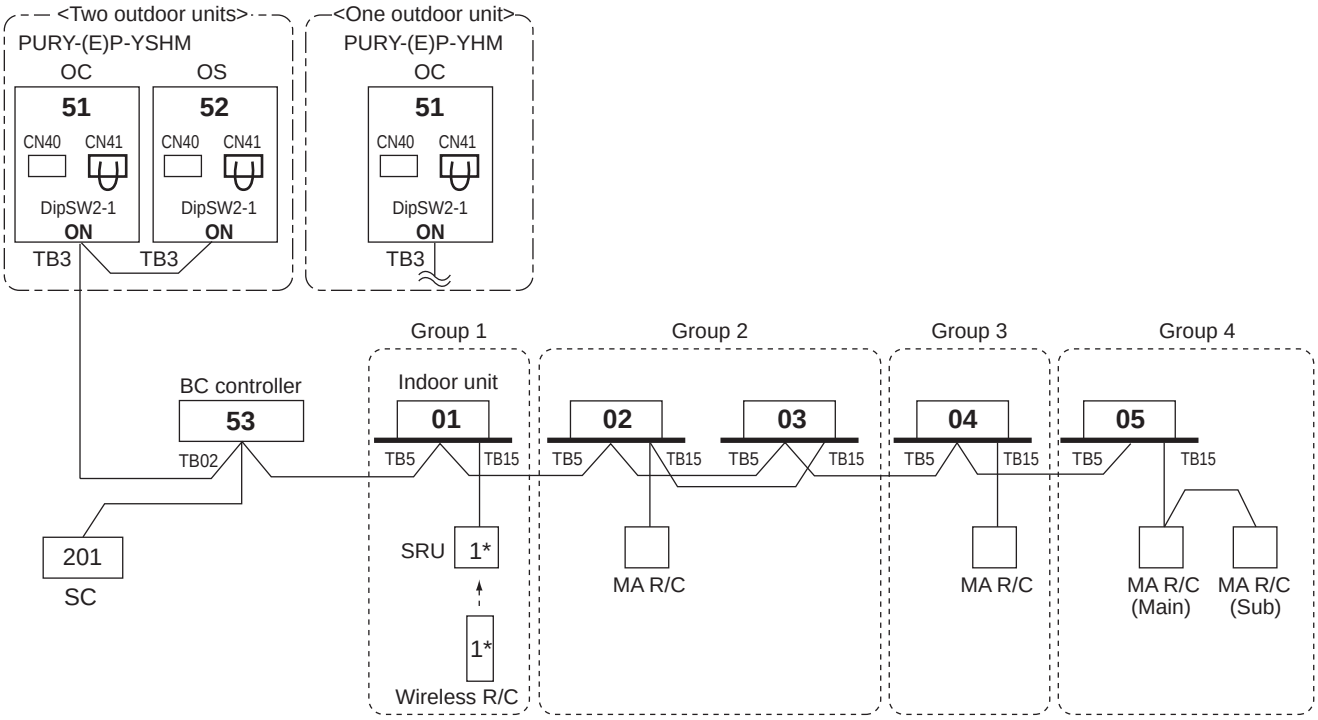

*1 For Wireless R/C and Signal receiver unit (SRU), channel 1, 2 and 3 are selectable and should be set to same channel.

*SC can be connected to TB3 side or TB7 side;
Should SC connected to TB7 side, change Jumper from CN41 to CN40 at the Outdoor unit module so as to supply power to the SC.

NOTE:

1. Outdoor units OC and OS in one refrigerant circuit system are automatically detected.
   OC and OS are ranked in descending order of capacity. If units are the same capacity, they are ranked in ascending order of their address.
2. Address should be set to Indoor units and centralized controller.
3. For a system having more than 32 indoor unit (P15-P140), confirm the need of Booster at **2-3 "System configuration restrictions".**
4. Indoor units should be set with a branch number.

2-4-3-3. MA remote controller, Multi-refrigerant-system, System Controller at TB7/ TB3 side, Booster for long M-NET wiring

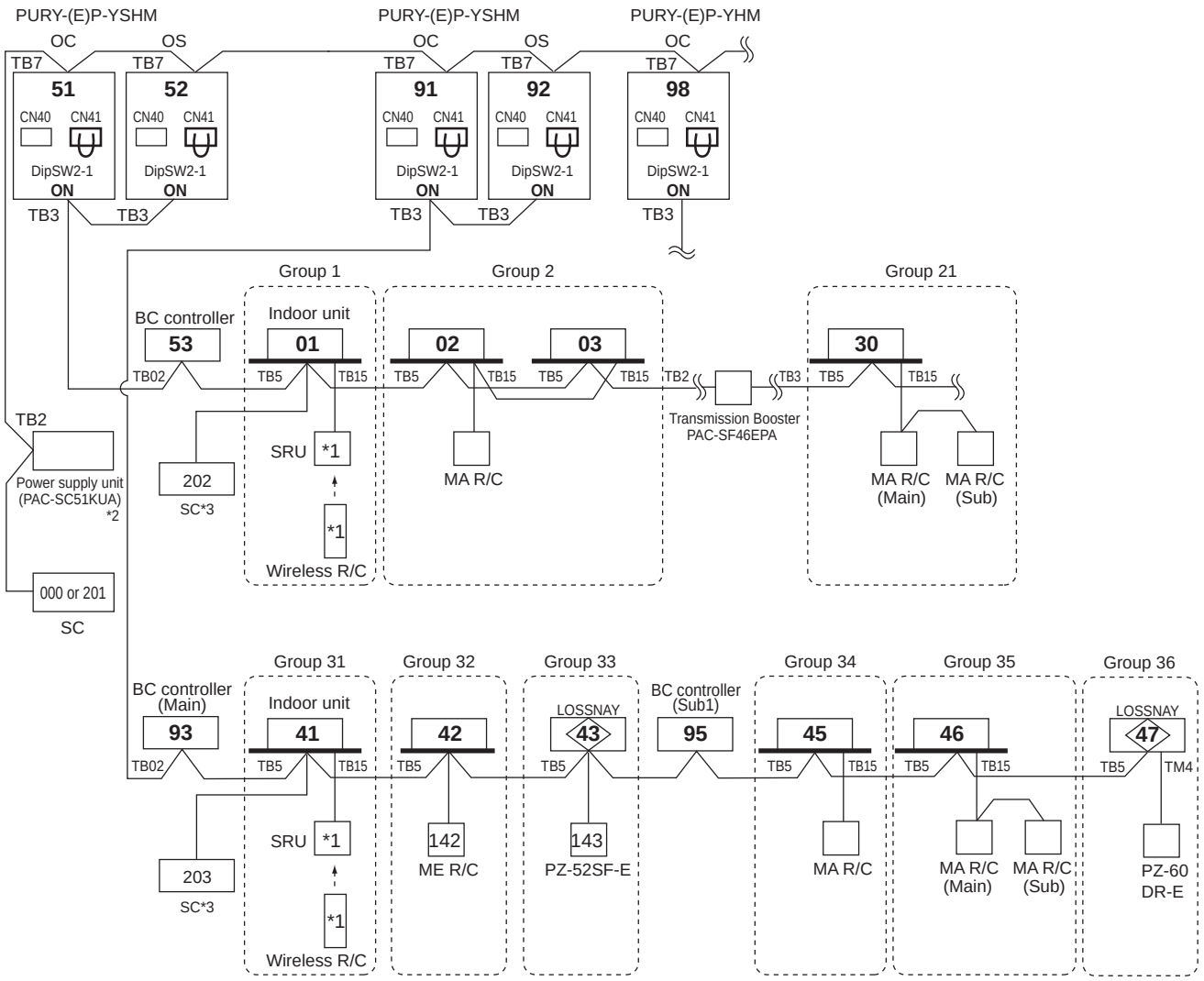

*1 For Wireless R/C and Signal receiver unit (SRU), channel 1, 2 and 3 are selectable and should be set to same channel.
*2 System controller should connect to TB7 at Outdoor and use power supply unit together in Multi-Refrigerant-System.
For AG-150A, 24VDC should be used with the PAC-SC51KUA.
*3 When multiple system controllers are connected in the system, set the controller with more functions than others as a "main" controller and others as "sub".
Make the setting to only one of the system controllers for "prohibition of operation from local remote controller".

NOTE:
1. Outdoor units OC and OS in one refrigerant circuit system are automatically detected.
OC and OS are ranked in descending order of capacity. If units are the same capacity, they are ranked in ascending order of their address.
2. Address should be set to Indoor units, LOSSNAY and system controller.
3. M-NET power is supplied by the Outdoor unit at TB3, while Indoor unit and ME remote controller consume the M-NET power for transmission use. The power balance is needed to consider for long M-NET wiring. Details refer to
2-3 "System configuration restrictions".
4. Indoor units should be set with a branch number.
5. Assign an address to each of the sub BC controllers which equals the sum of the smallest address of the indoor units that are connected to each sub BC controller and 50.

System R2

2-4-3-4. ME remote controller, Single-refrigerant-system, No system controller

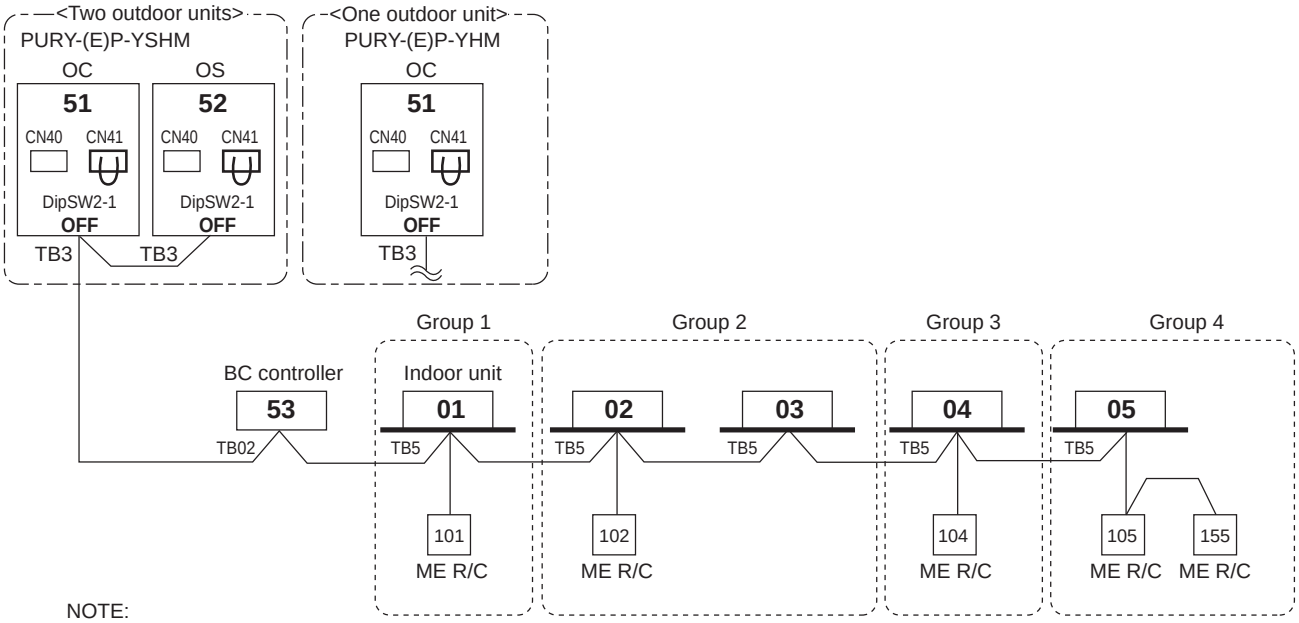

NOTE:

1. Outdoor units OC and OS in one refrigerant circuit system are automatically detected.
   OC and OS are ranked in descending order of capacity. If units are the same capacity, they are ranked in ascending order of their address.
2. Address should be set to Indoor units, system controller and ME remote controllers.
3. M-NET power is supplied by the Outdoor unit at TB3, while Indoor unit and ME RC consume the M-NET power for transmission use. The power balance is needed to consider for long M-NET wiring. Details refer to **2-3 "System configuration restrictions".**
4. Indoor units should be set with a branch number.

2-4-3-5. ME remote controller, Single-refrigerant-system, System controller, LOSSNAY

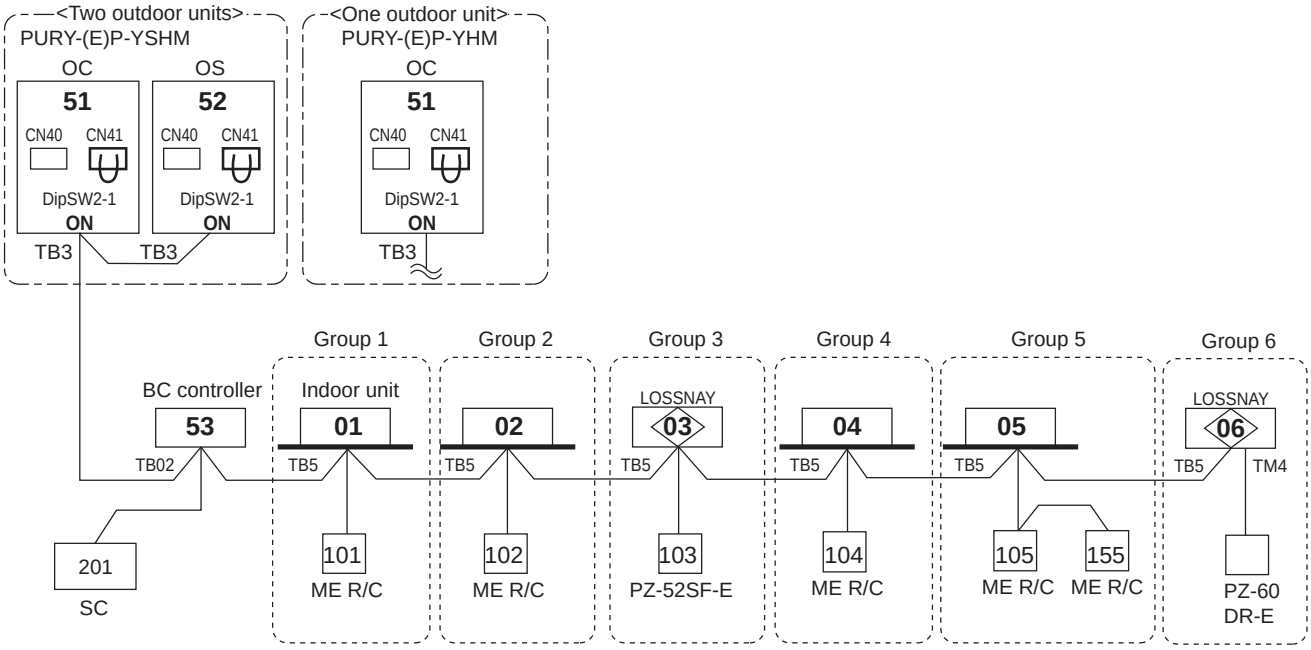

*SC can be connected to TB3 side or TB7 side;
Should SC connected to TB7 side, change Jumper from CN41 to CN40 at the Outdoor unit module so as to supply power to the SC.

NOTE:

1. Outdoor units OC and OS in one refrigerant circuit system are automatically detected.
   OC and OS are ranked in descending order of capacity. If units are the same capacity, they are ranked in ascending order of their address.
2. Address should be set to Indoor units, LOSSNAY centralized controller, ME remote controllers.
3. For a system having more than 32 indoor unit (P15-P140), confirm the need of Booster at **2-3 "System configuration restrictions".**
4. Indoor units should be set with a branch number.

2-4-3-6. ME remote controller, Multi-refrigerant-system, System Controller at TB 7side, LOSSNAY, Booster for long M-NET wiring

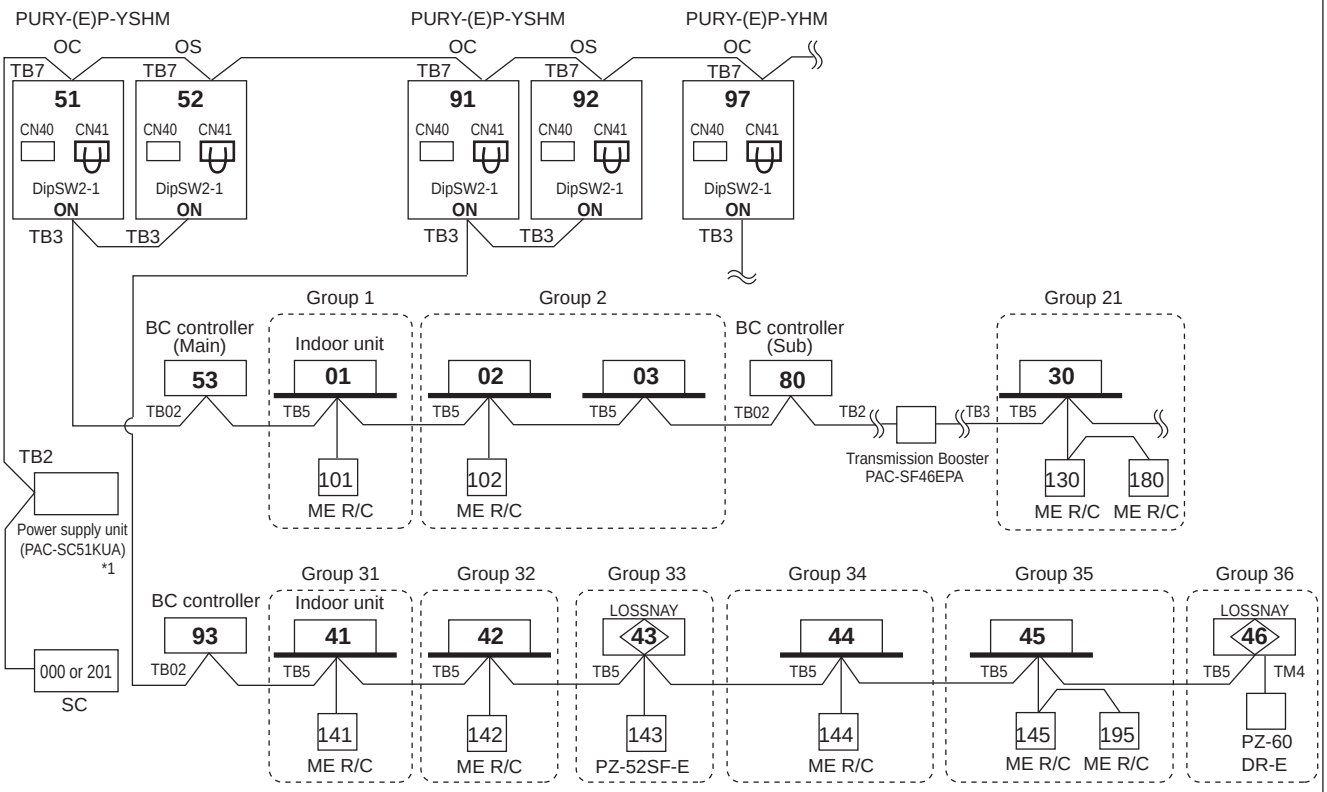

*1 System controller should connect to TB7 at Outdoor and use power supply unit together in Multi-Refrigerant-System.
For AG-150A, 24VDC should be used with the PAC-SC51KUA.

NOTE:

1. Outdoor units OC and OS in one refrigerant circuit system are automatically detected.
   OC and OS are ranked in descending order of capacity. If units are the same capacity, they are ranked in ascending order of their address.
2. M-NET power is supplied by the Outdoor unit at TB3, while Indoor unit and ME RC consume the M-NET power for transmission use. The power balance is needed to consider for long M-NET wiring. Details refer to **2-3 "System configuration restrictions".**
3. Indoor units should be set with a branch number.
4. Assign an address to each of the sub BC controllers which equals the sum of the smallest address of the indoor units that are connected to each sub BC controller and 50.
   When the address assigned to sub BC controller overlaps those of any other units including outdoor units (OC/OS) or main BC controller, sub BC controller will be given priority to have the address.

2-4-3-7. Example : BC, BC sub

NOTE
- Indoor units should be set with a branch number.
- BC (main) address = O/U address + 1
- BC (sub) address = Lowest address within the indoor units connected to the BC controller (sub) + 50
- If applicable, set the sub BC controllers in an PURY system in the following order:
  (1) Indoor unit to be connected to the BC controller (Main)
  (2) Indoor unit to be connected to the BC controller (No.1 Sub)
  (3) Indoor unit to be connected to the BC controller (No.2 Sub)
  Set the address so that (1)<(2)<(3)

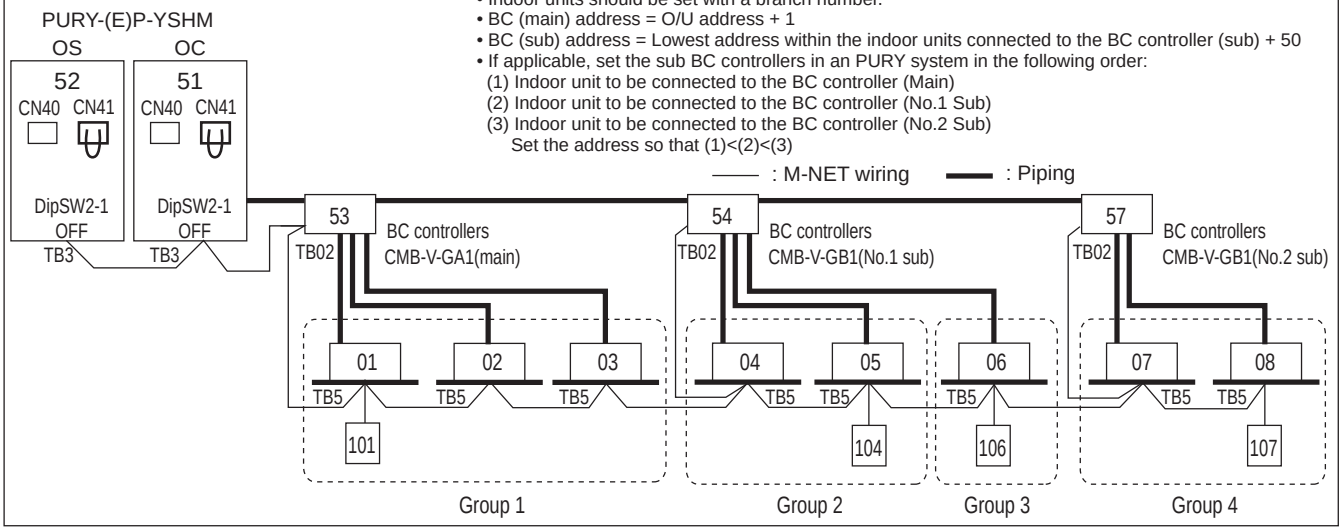

2-4-3-8. ME remote controller, Multi-refrigerant-system, No Power supply unit

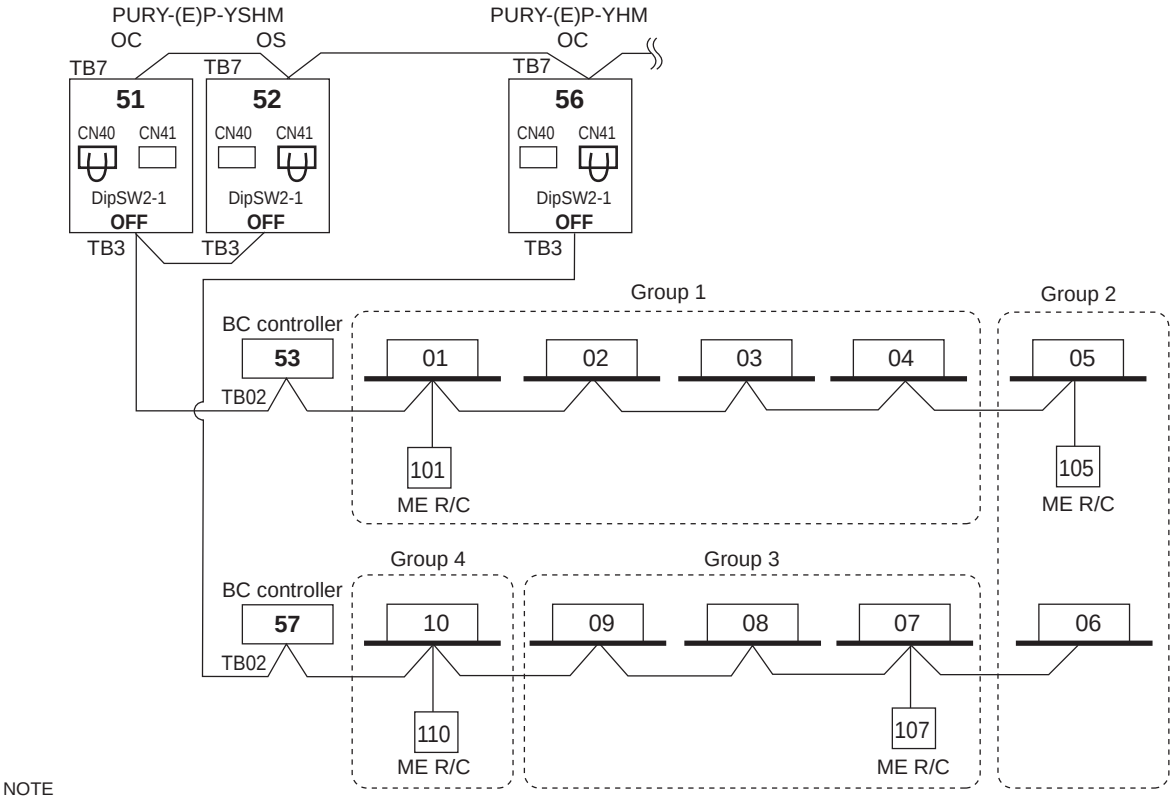

NOTE
- It is necessary to change the connecter to CN40 on the outdoor unit control board (only one outdoor unit) when the group is set between other refrigerant systems.
- It is necessary to set on the remote controller by manual when group sets on the different refrigerant system. Please refer to remote controller installation manual.

2-4-3-9. ME remote controller , Multi-refrigerant-system, System Controller at TB7 side, No Power sypply unit

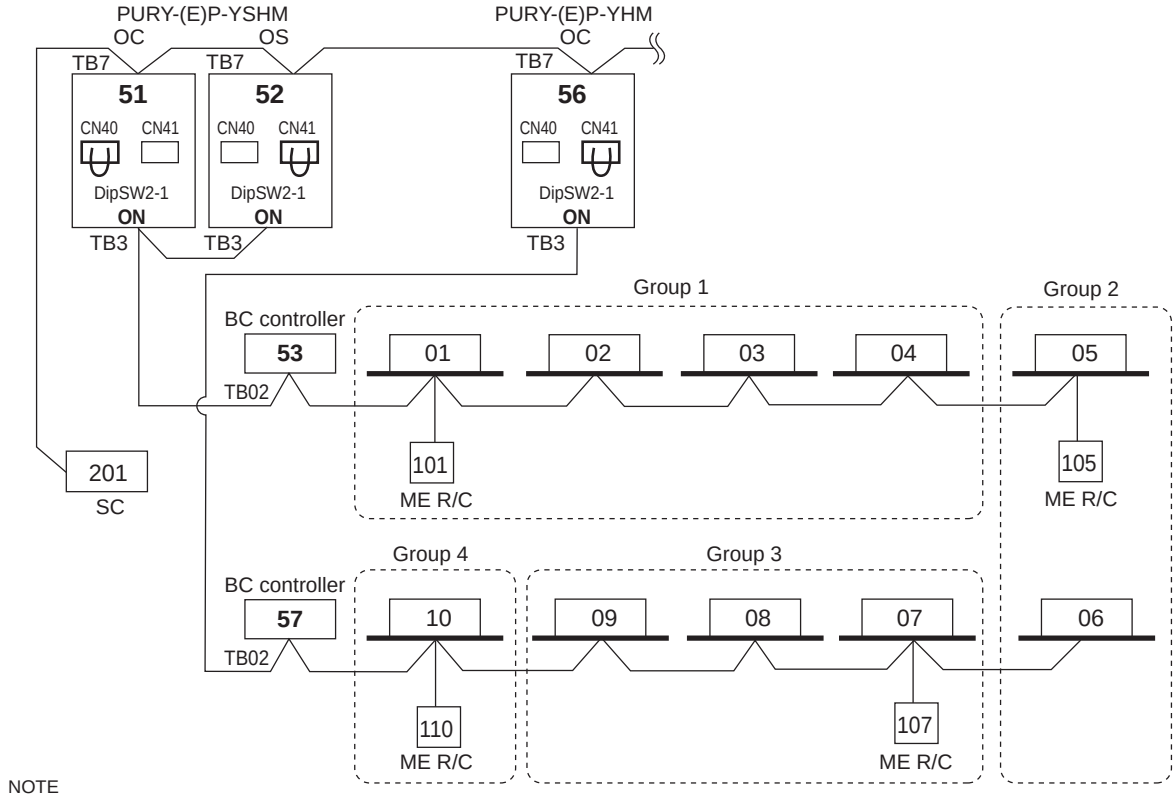

NOTE
- It is necessary to change the connecter to CN40 on the outdoor unit control board (only one outdoor unit) when the group is set between other refrigerant systems.
- It is necessary to set on the remote controller by manual when group sets on the different refrigerant system. Please refer to remote controller installation manual.

2-4-3-10. TG-2000A(*1)+AG-150A(*2)

AG-150A can control max. 50 indoor units;
TG-2000A can control max. 40 AG-150A;*3
TG-2000A can control max. 2000 indoor units.

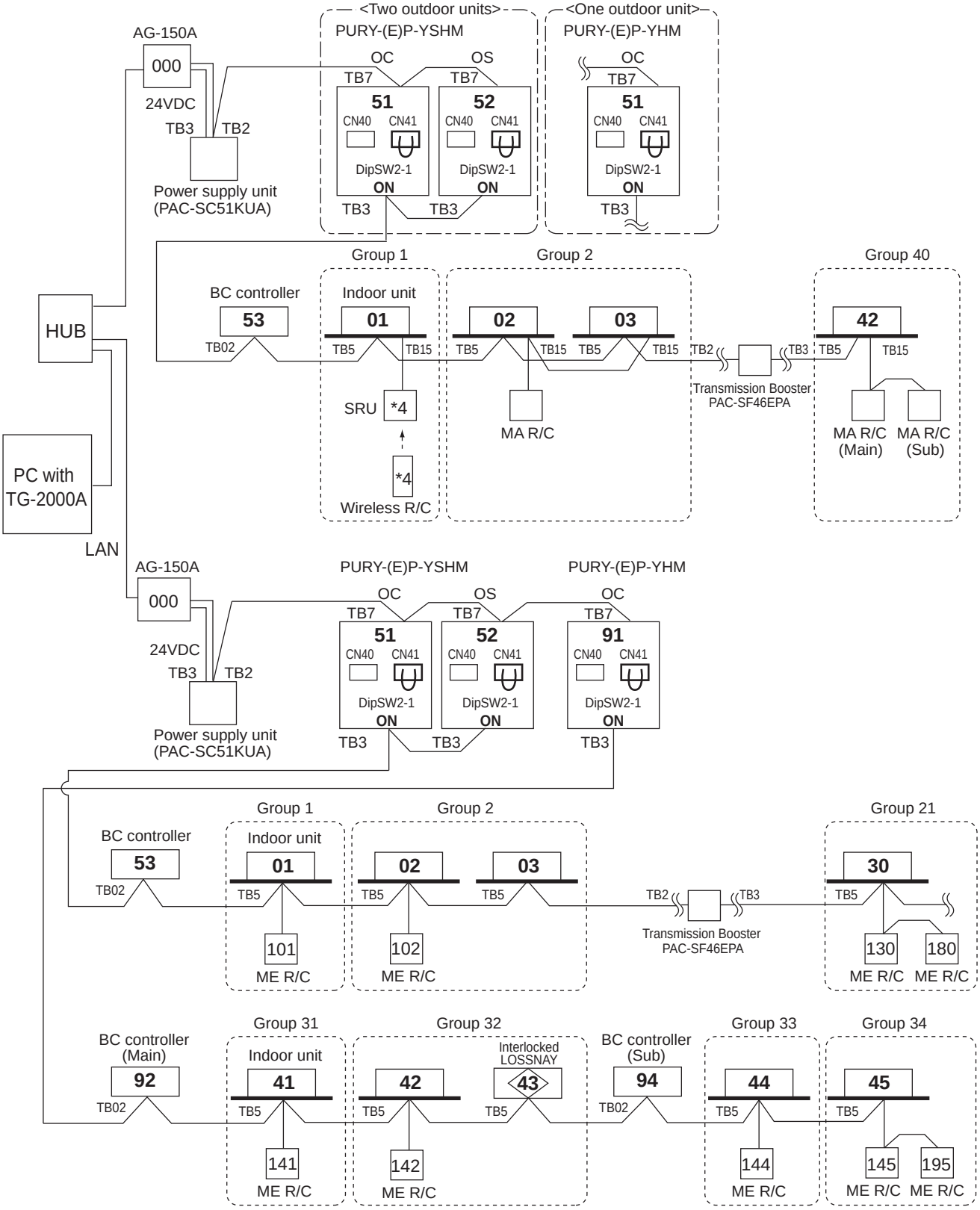

*1 TG-2000A (Ver.5.5 or later) supports AG-150A (Ver.1series).
TG-2000A (Ver. 6.1 or later) supports AG-150A (Ver. 2.1 or later) connected with the expansion controller (EC).
*2 AG-150A (Ver.1series) does not support the expansion controller (EC).
*3 When AG-150A connected with the expansion controller (EC) is connected, the number of EC will be the maximum controllable number.
TG-2000A can control up to 40 EC or AG-150A without EC connection.
*4 For Wireless R/C and Signal receiver unit (SRU), channel 1, 2 and 3 are selectable and should be set to same channel.

2-4-3-11. AG-150A+PAC-YG50ECA (Expansion controller)

AG-150A can control max. 150 indoor units/ via expansion controllers.

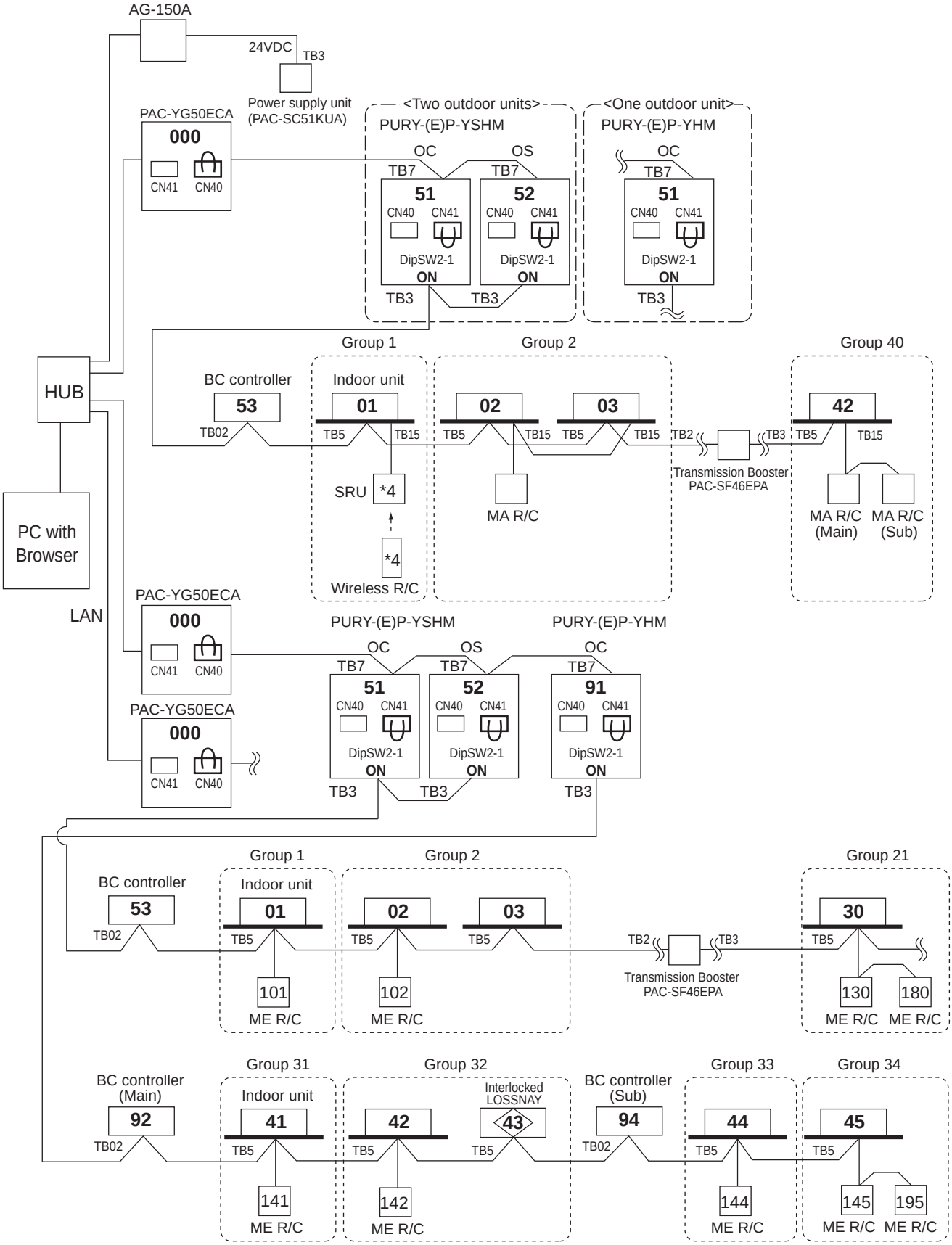

NOTE

- When connecting AG-150A to PAC-YG50ECA, TB2 for power supply unit does not need to be connected to AG-150A.

*1 For Wireless R/C and Signal receiver unit (SRU), channel 1, 2 and 3 are selectable and should be set to same channel.

*2 AG-150A (Ver.1series) does not support the expansion controller (EC).

2-4-3-12. LMAP

LMAP can transmission for max. 50 indoor units;
If system controller (SC) is used, DipSW1-2 at LMAP and DipSW2-1 at Outdoor unit should set to "ON".
Change Jumper from CN41 to CN40 to activate power supply to LMAP itself for those LMAP connected without system controller (SC).

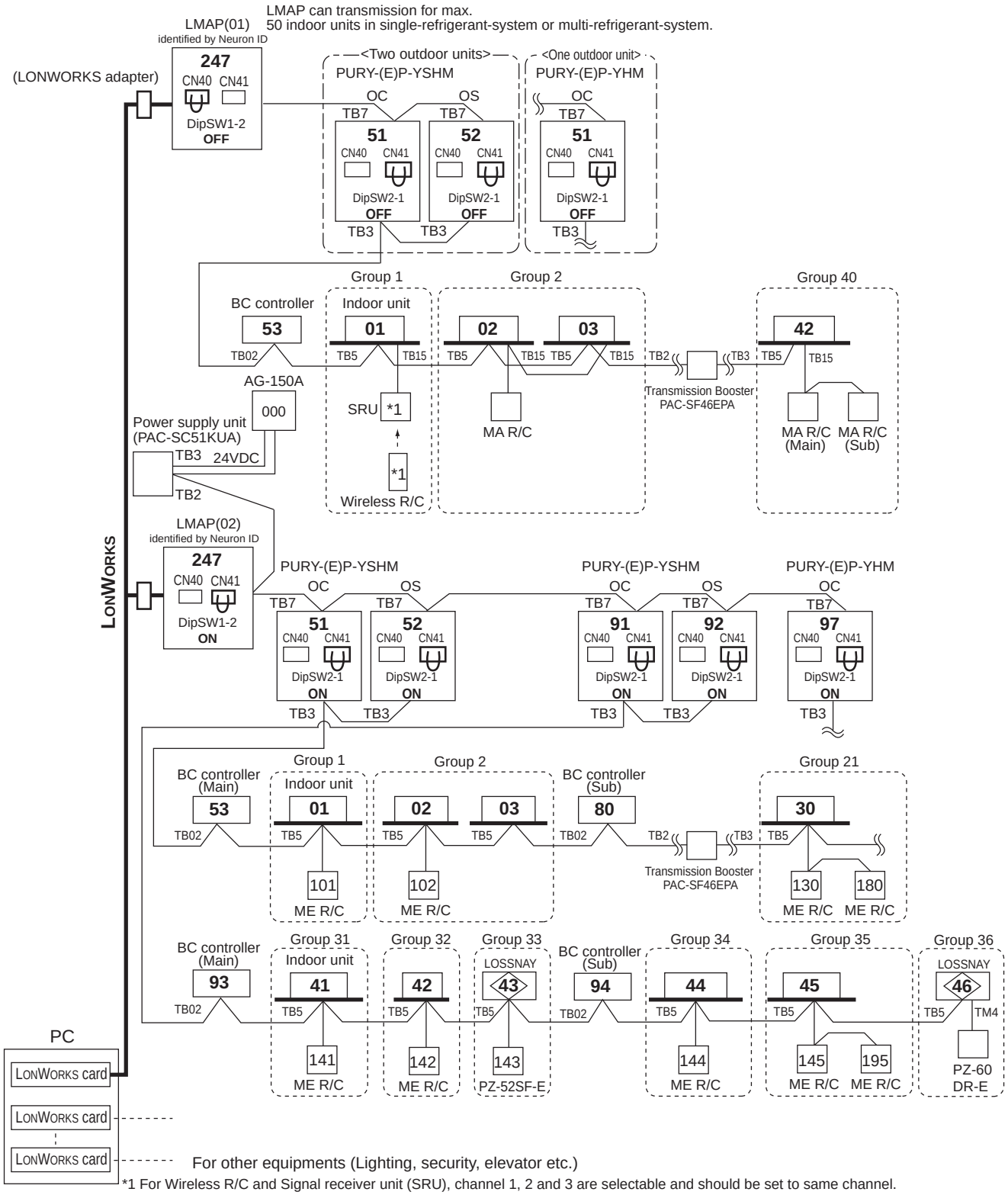

*1 For Wireless R/C and Signal receiver unit (SRU), channel 1, 2 and 3 are selectable and should be set to same channel.

2-4-3-13. BM ADAPTER

BM ADAPTER can transmission for max. 50 indoor units;
Change Jumper from CN41 to CN40 to activate power supply to BM ADAPTER itself for those BM ADAPTER connected without the power supply unit.

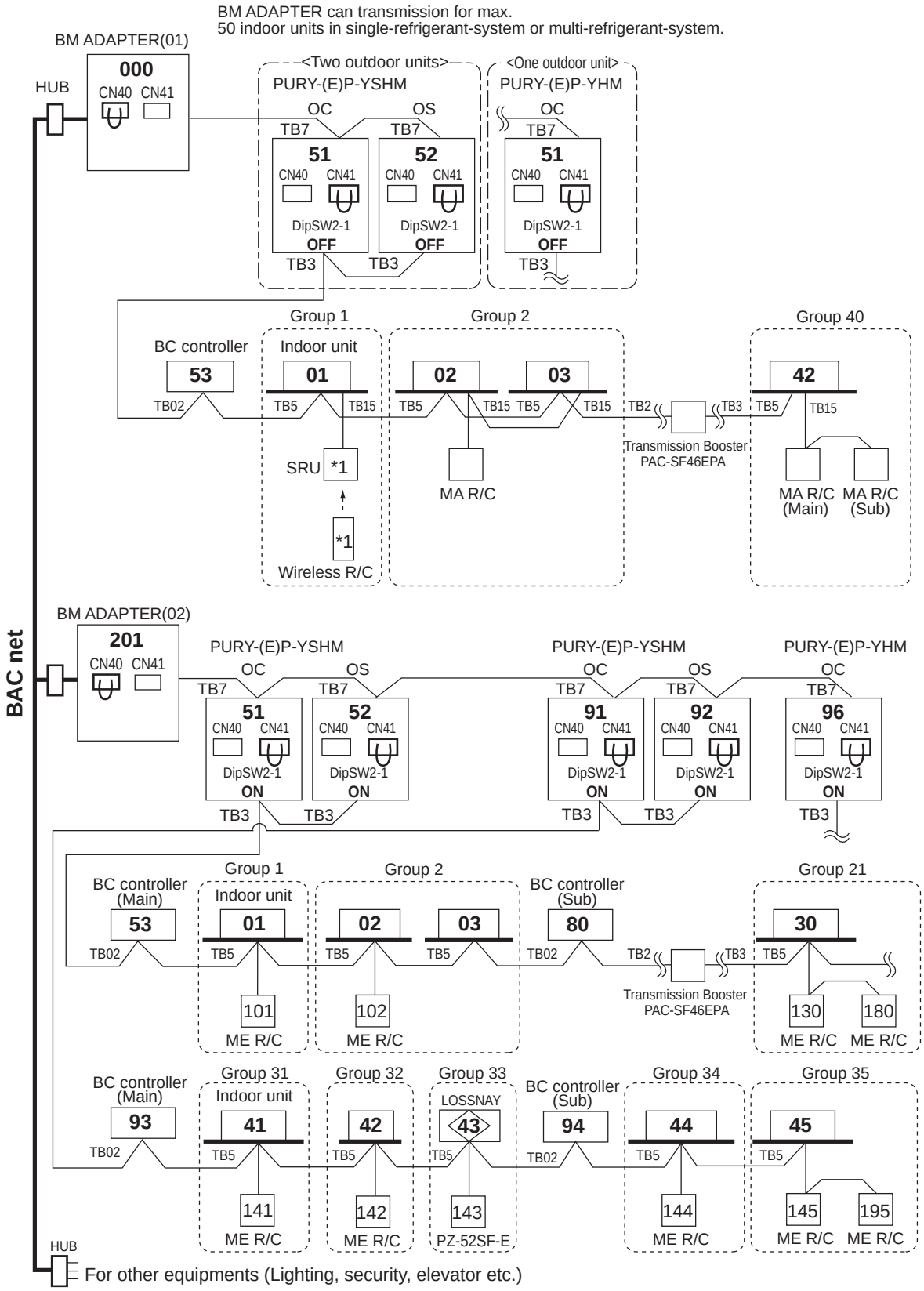

*1 For Wireless R/C and Signal receiver unit (SRU), channel 1, 2 and 3 are selectable and should be set to same channel.

2-4-3-14. BM ADAPTER+PAC-YG50ECA (Expansion controller)

BM ADAPTER(*1) can transmission for max. 150 indoor units/via expansion controllers (PAC-YG50ECA).

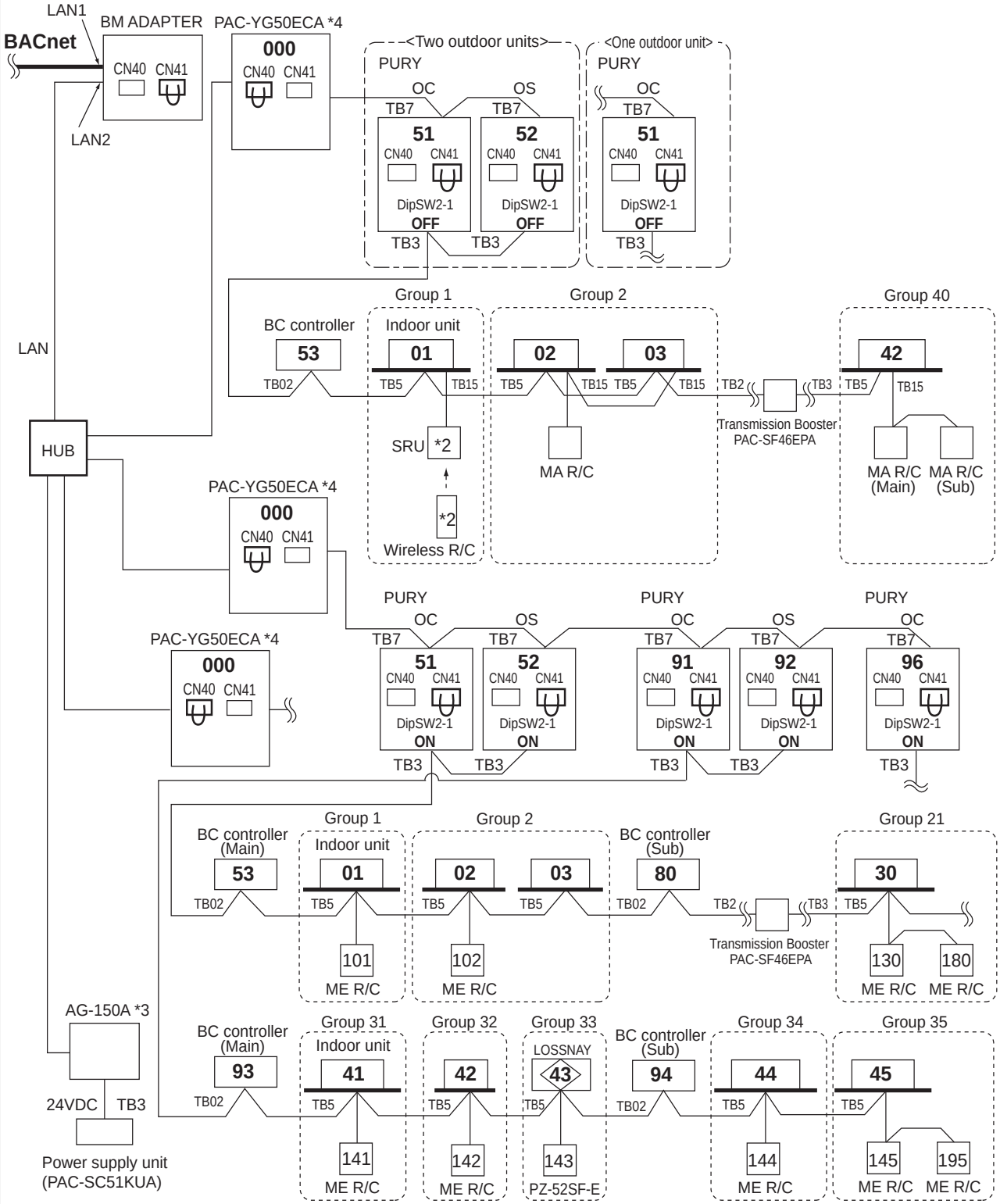

NOTE

•It is not necessary to connect the M-NET transmission line to the TB3 on BM ADAPTER. Leave the power jumper of BM ADAPTER connected to CN41.

*1 BM ADAPTER (Ver.2.00 or later) supports the expansion controller.
*2 For Wireless R/C and Signal receiver unit (SRU), channel 1, 2 and 3 are selectable and should be set to same channel.
*3 AG-150A (Ver.2.30 or later) supports the BM ADAPTER.
*4 PAC-YG50ECA (Ver.1.30 or later) supports the BM ADAPTER.

3. Piping Design

3-1. R410A Piping material

Refrigerant pipe for CITY MULTI shall be made of phosphorus deoxidized copper, and has two types.
A. Type-O : Soft copper pipe (annealed copper pipe), can be easily bent with human's hand.
B. Type-1/2H pipe : Hard copper pipe (Straight pipe), being stronger than Type-O pipe of the same radical thickness.

The maximum operation pressure of R410A air conditioner is 4.30 MPa [623psi]. The refrigerant piping should ensure the safety under the maximum operation pressure. MITSUBISHI ELECTRIC recommends pipe size as Table 3-1, or You shall follow the local industrial standard. Pipes of radical thickness 0.7mm or less shall not be used.

Table 3-1. Copper pipe size and radial thickness for R410A CITY MULTI.

Size (mm)	Size (inch)	Radial thickness (mm)	Radial thickness (mil)	Pipe type
ø6.35	ø1/4"	0.8	[32]	Type-O
ø9.52	ø3/8"	0.8	[32]	Type-O
ø12.7	ø1/2"	0.8	[32]	Type-O
ø15.88	ø5/8"	1.0	[40]	Type-O
ø19.05	ø3/4"	1.2	[48]	Type-O
ø19.05	ø3/4"	1.0	[40]	Type-1/2H or H
ø22.2	ø7/8"	1.0	[40]	Type-1/2H or H
ø25.4	ø1"	1.0	[40]	Type-1/2H or H
ø28.58	ø1-1/8"	1.0	[40]	Type-1/2H or H
ø31.75	ø1-1/4"	1.1	[44]	Type-1/2H or H
ø34.93	ø1-3/8"	1.2	[48]	Type-1/2H or H
ø41.28	ø1-5/8"	1.4	[56]	Type-1/2H or H

* For pipe sized ø19.05 (3/4") for R410A air conditioner, choice of pipe type is up to you.
* The figures in the radial thickness column are based on the Japanese standards and provided only as a reference. Use pipes that meet the local standards.

Flare

Due to the relative higher operation pressure of R410A compared to R22, the flare connection should follow dimensions mentioned below so as to achieve enough the air-tightness.

Flare pipe	Pipe size	A (For R410A) (mm[in.])
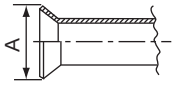	ø6.35 [1/4"]	9.1
	ø9.52 [3/8"]	13.2
	ø12.70 [1/2"]	16.6
	ø15.88 [5/8"]	19.7
	ø19.05 [3/4"]	24.0

Flare nut	Pipe size	B (For R410A) (mm[in.])
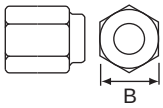	ø6.35 [1/4"]	17.0
	ø9.52 [3/8"]	22.0
	ø12.70 [1/2"]	26.0
	ø15.88 [5/8"]	29.0
	ø19.05 [3/4"]	36.0

3-2. Piping Design

3-2-1. IF 16 ports or less are in use, I.e., if only one BC controller is in use with no sub BC controller

Note1. No Header usable on PURY system.
Note2. Indoor unit sized P100-P250 should be connected to BC controller via Y shape joint CMY-R160-J1 ;
Note3. Indoor unit sized P100-P250 does NOT share BC controller ports with other Indoor units ;
Note4. As bents cause pressure loss on transportation of refrigerant, fewer bents design is better ;
Piping length needs to consider the actual length and equivalent length which bents are counted.
Equivalent piping length (m)=Actual piping length+"M" x Quantity of bent.
Note5. Set DIP-SW 4-6 to ON of BC controller, in case of connected Indoor unit sized P100-P140 with 2 ports.
Note6. It is also possible to connect Indoor unit sized P100-P140 with 1 port (set DIP-SW 4-6 to OFF).
However, the cooling capacity decreases a little (For details, refer to the chapter OUTDOOR UNITS, R2 SERIES, 6-4. Correction by port counts of the BC controller).
Note7. Individual indoor units grouped together to connect to the BC controller via one port cannot operate individually in heating and cooling modes at the same time. I.e., they must all function in either heating or cooling together.
Note8. Indoor capactiy is described as its model size. For example, PEFY-P63VML-E, its capacity is P63.
Note9. Total down-stream Indoor capacity is the summary of the model size of Indoors down-stream.
For example, PEFY-P63VML-E + PEFY-P32VML-E : Total Indoor capacity = P63 + P32 = P95.

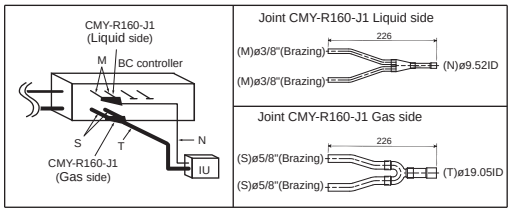

Fig. 3-2-1AA

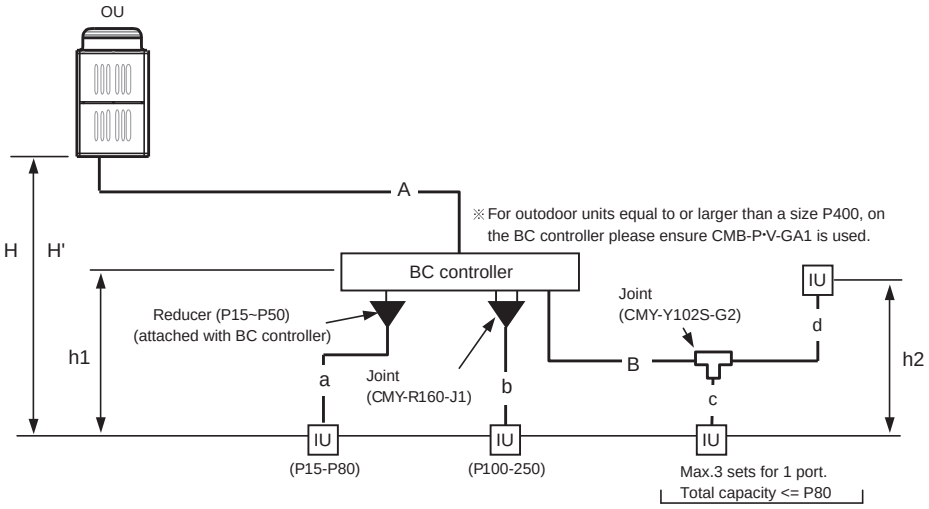

Fig. 3-2-1A Piping scheme

Table 3-2-1-1. Piping length limitation (m [ft.])

Item	Piping in the figure	Max. length	Max. equivalent length
Total piping length	A+B+a+b+c+d	*1	-
Farthest IU from OU	A+B+d	165 [541']	190 [623']
Distance between OU and BC	A	110 [360'] *1	110 [360'] *1
Farthest IU from BC controller	B+d	40 [131'] *2*3	40 [131'] *3
Heignt between OU and IU (OU above IU)	H	50 [164'] *5	-
Heignt between OU and IU (OU under IU)	H'	40 [131'] *6	-
Height between IU and BC	h1	15 [49'] (10 [32']) *4	-
Height between IU and IU	h2	15 [49'] (10 [32']) *4	-

Table3-2-1-2. Bent equivalent length "M"

Outdoor Model	M (m/bent [ft./bent])
(E)P200YHM	0.35 [1.15']
(E)P250YHM	0.42 [1.38']
(E)P300YHM	0.42 [1.38']
P350YHM	0.47 [1.54']
P400YHM	0.50 [1.64']

OU : Outdoor Unit ; IU : Indoor Unit ; BC : BC controller
*1. Refer to the section 3-2-4.
*2. Details refer to Fig.3-2-1-1
*3. Farthest Indoor from BC controller "B+d" can exceed 40m till 60m if no Indoor sized P200, P250 connected. Details refer to Fig.3-2-1-1
*4. Distance of Indoor sized P200, P250 from BC must be less than 10m, if any.
*5. 90m is available depending on the model and installation conditions. For more detailed information, contact your local distributor.
*6. 60m is available depending on the model and installation conditions. For more detailed information, contact your local distributor.

Fig. 3-2-1-1 Piping length and height between IU and BC controller

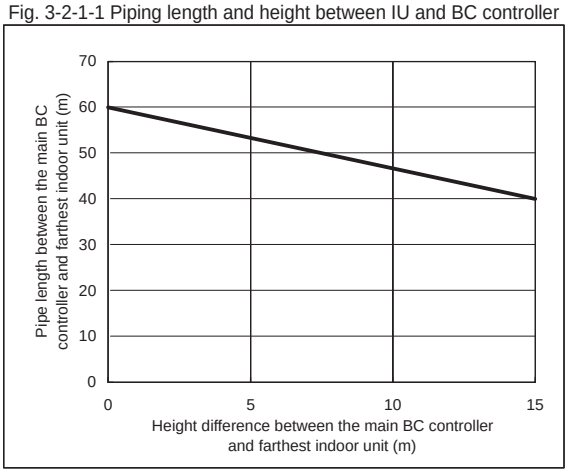

Table3-2-1-3. Piping "A"size selection rule (mm [in.])

Outdoor Model	Pipe(High pressure)	Pipe(Low pressure)
(E)P200YHM	ø15.88 [5/8"]	ø19.05 [3/4"]
(E)P250YHM	ø19.05 [3/4"]	ø22.20 [7/8"]
(E)P300YHM	ø19.05 [3/4"]	ø22.20 [7/8"]
P350YHM	ø19.05 [3/4"]	ø28.58 [1-1/8"]
P400YHM	ø22.20 [7/8"]	ø28.58 [1-1/8"]

Table3-2-1-4. Piping "B" size seleciton rule (mm [in.])

Total down-stream Indoor capacity	Pipe(Liquid)	Pipe(Gas)
P140 or less	ø9.52 [3/8"]	ø15.88 [5/8"]

Table3-2-1-5. Piping "a", "b", "c", "d" size selection rule (mm [in.])

Indoor Unit size	Pipe(Liquid)	Pipe(Gas)
P15 to P50, GUF-50RD(H)	ø6.35 [1/4"]	ø12.70 [1/2"]
P63 to P140, GUF-100RD(H)	ø9.52 [3/8"]	ø15.88 [5/8"]
P200	ø9.52 [3/8"]	ø19.05 [3/4"]
P250	ø9.52 [3/8"]	ø22.20 [7/8"]

System R2

3-2-2. IF more than 16 ports are in use, or if there is more than one BC controller in use for one outdoor unit

Note1. No Header usable on PURY system.
Note2. Indoor unit sized P100-P250 should be connected to BC controller via Y shape joint CMY-R160-J1 ;
Note3. Indoor unit sized P100-P250 does NOT share BC controller ports with other Indoor units ;
Note4. As bents cause pressure loss on transportation of refrigerant, fewer bents design is better ;
Piping length needs to consider the actual length and equivalent length which bents are counted.
Equivalent piping length (m)=Actual piping length+"M" x Quantity of bent.
Note5. Set DIP-SW 4-6 to ON of BC controller, in case of connected Indoor unit sized P100-P140 with 2 ports.
Note6. It is also possible to connect Indoor unit sized P100-P140 with 1 port (set DIP-SW 4-6 to OFF).
However, the cooling capacity decreases a little (For details, refer to the chapter OUTDOOR UNITS, R2 SERIES, 6-4. Correction by port counts of the BC controller).
Note7. Individual indoor units grouped together to connect to the BC controller via one port cannot operate individually in heating and cooling modes at the same time. I.e., they must all function in either heating or cooling together.
Note8. For sub BC controller CMB-P·V-GB1 the connectable indoor unit capacities may sum to equal that of a P350 unit or less. However, if two sub controllers are used the TOTAL sum of connectable units connected to BOTH sub controllers must also not exceed that of a P350 unit.
For sub BC controller CMB-P1016V-HB1 the connectable indoor unit capacities may sum to equal that or a P350 unit or less. However, if two sub controllers are used the TOTAL sum of connectable units connected to BOTH sub controllers must also not exceed that of a P450 unit.
Note9. Indoor capactiy is described as its model size. For example, PEFY-P63VML-E, its capacity is P63.
Note10. Total down-stream Indoor capacity is the summary of the model size of Indoors down-stream.
For example, PEFY-P63VML-E + PEFY-P32VML-E : Total Indoor capacity = P63 + P32 = P95.

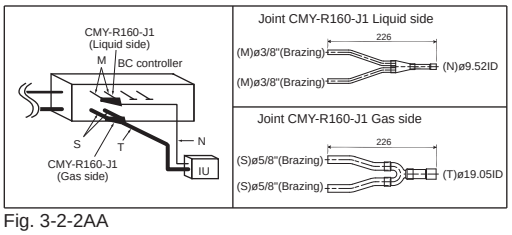

Fig. 3-2-2AA

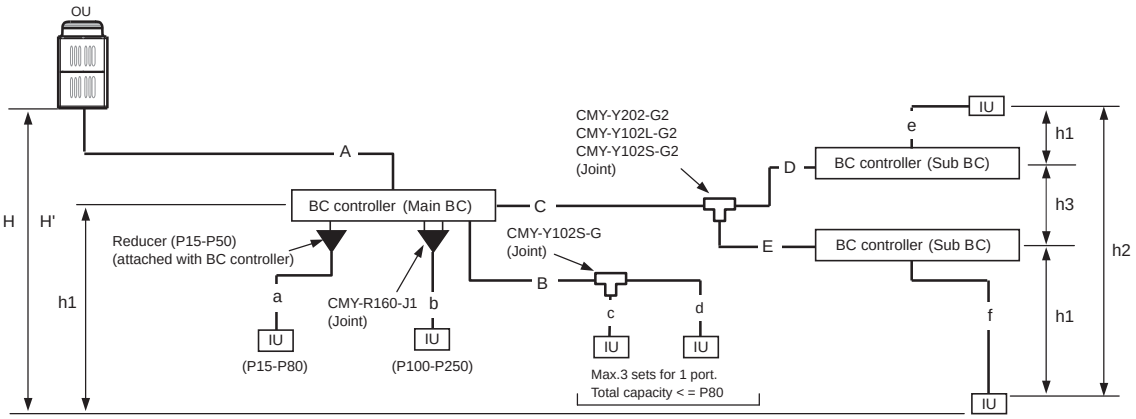

Fig. 3-2-2A Piping scheme

OU : Outdoor unit, IU : Indoor unit

Table 3-2-2-1. Piping length limitation (m [ft.])

Item	Piping in the figure	Max. length	Max. equivalent length
Total piping length	A+B+C+D+E+a+b+c+d+e+f	*1	-
Farthest IU from OU	A+C+E+f	165 [541']	190 [623']
Distance between OU and BC	A	110 [360'] *1	110 [360'] *1
Farthest IU from BC controller	B+d or C+D+e or C+E+f	40 [131'] *2*3	40 [131'] *2*3
Heignt between OU and IU (OU above IU)	H	50 [164'] *6	-
Heignt between OU and IU (OU under IU)	H'	40 [131'] *7	-
Height between IU and BC	h1	15 [49'] (10 [32']) *4	-
Height between IU and IU	h2	15 [49'] (10 [32']) *4	-
Heignt between BC(Main or Sub) and BC(Sub)	h3	15 [49'] (10 [32']) *5	-

Table3-2-2-2. Bent equivalent length "M"

Outdoor Model	M (m/bent [ft./bent])
(E)P200YHM	0.35 [1.15']
(E)P250YHM	0.42 [1.38']
(E)P300YHM	0.42 [1.38']
P350YHM	0.47 [1.54']
P400YHM	0.50 [1.64']

OU : Outdoor Unit ; IU : Indoor Unit ; BC : BC controller
*1. Refer to the section 3-2-4.
*2. Details refer to Fig.3-2-2-1
*3. Farthest Indoor from BC controller "B+d or C+D+e or C+E+f " can exceed 40m till 60m if no Indoor sized P200, P250 connected. Details refer to Fig.3-2-2-1
*4. Distance of Indoor sized P200, P250 from BC must be less than 10m, if any.
*5. When using 2 Sub BC controllers, max. height "h3" should be considered.
*6. 90m is available depending on the model and installation conditions. For more detailed information, contact your local distributor.
*7. 60m is available depending on the model and installation conditions. For more detailed information, contact your local distributor.

Fig. 3-2-2-1 Piping length and height between IU and BC controller

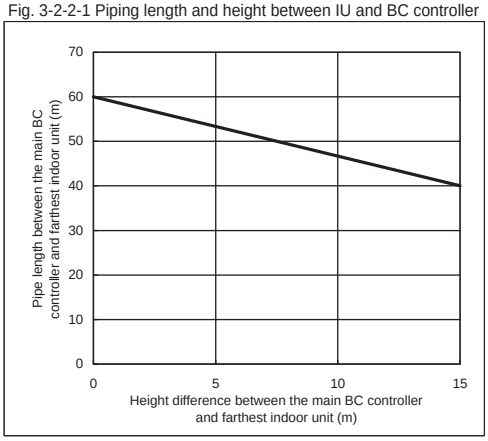

Table3-2-2-3. Piping "A"size selection rule (mm [in.])

Outdoor Model	Pipe(High pressure)	Pipe(Low pressure)
(E)P200YHM	ø15.88 [5/8"]	ø19.05 [3/4"]
(E)P250YHM	ø19.05 [3/4"]	ø22.20 [7/8"]
(E)P300YHM	ø19.05 [3/4"]	ø22.20 [7/8"]
P350YHM	ø19.05 [3/4"]	ø28.58 [1-1/8"]
P400YHM	ø22.20 [7/8"]	ø28.58 [1-1/8"]

Table3-2-2-4. Piping "B" size seleciton rule (mm [in.])

Total down-stream Indoor capacity	Pipe(Liquid)	Pipe(Gas)
P140 or less	ø9.52 [3/8"]	ø15.88 [5/8"]

Table3-2-2-5. Piping "C", "D", "E" size selection rule (mm [in.])

Total down-stream Indoor capacity	Pipe(Lequid)	Pipe(HP Gas)	Pipe(LP Gas)
P200 or less	ø9.52 [3/8"]	ø15.88 [5/8"]	ø19.05 [3/4"]
P201 to P300	ø9.52 [3/8"]	ø19.05 [3/4"]	ø22.20 [7/8"]
P301 to P350	ø12.70 [1/2"]	ø19.05 [3/4"]	ø28.58 [1-1/8"]
P351 to P400	ø12.70 [1/2"]	ø22.20 [7/8"]	ø28.58 [1-1/8"]
P401 to P450	ø15.88 [5/8"]	ø22.20 [7/8"]	ø28.58 [1-1/8"]

HP : High pressure, LP:Low pressure

Table3-2-2-6. Piping "a", "b", "c", "d", "e", "f" saize selection rule (mm [in.])

Indoor Unit size	Pipe(Lequid)	Pipe(Gas)
P15 to P50, GUF-50RD(H)	ø6.35 [1/4"]	ø12.70 [1/2"]
P63 to P140, GUF-100RD(H)	ø9.52 [3/8"]	ø15.88 [5/8"]
P200	ø9.52 [3/8"]	ø19.05 [3/4"]
P250	ø9.52 [3/8"]	ø22.20 [7/8"]

3-2-3. IF more than 16 ports are in use, or if there is more than one BC controller in use for two outdoor units

Note1. No Header usable on PURY system.
Note2. Indoor unit sized P100-P250 should be connected to BC controller via Y shape joint CMY-R160-J1 ;
Note3. Indoor unit sized P100-P250 does NOT share BC controller ports with other Indoor units ;
Note4. As bents cause pressure loss on transportation of refrigerant, fewer bents design is better ;
Piping length needs to consider the actual length and equivalent length which bents are counted.
Equivalent piping length (m)=Actual piping length+"M" x Quantity of bent.
Note5. Set DIP-SW 4-6 to ON of BC controller, in case of connected Indoor unit sized P100-P140 with 2 ports.
Note6. It is also possible to connect Indoor unit sized P100-P140 with 1 port (set DIP-SW 4-6 to OFF).
However, the cooling capacity decreases a little (For details, refer to the chapter OUTDOOR UNITS, R2 SERIES, 6-4. Correction by port counts of the BC controller).
Note7. Individual indoor units grouped together to connect to the BC controller via one port cannot operate individually in heating and cooling modes at the same time. I.e., they must all function in either heating or cooling together.
Note8. For sub BC controller CMB-P-V-GB1 the connectable indoor unit capacities may sum to equal that of a P350 unit or less. However, if two sub controllers are used the TOTAL sum of connectable units connected to BOTH sub controllers must also not exceed that of a P350 unit.
For sub BC controller CMB-P1016V-HB1 the connectable indoor unit capacities may sum to equal that or a P350 unit or less. However, if two sub controllers are used the TOTAL sum of connectable units connected to BOTH sub controllers must also not exceed that of a P450 unit.
Note9. Indoor capactiy is described as its model size. For example, PEFY-P63VML-E, its capacity is P63.
Note10. Total down-stream Indoor capacity is the summary of the model size of Indoors down-stream.
For example, PEFY-P63VML-E + PEFY-P32VML-E : Total Indoor capacity = P63 + P32 = P95.

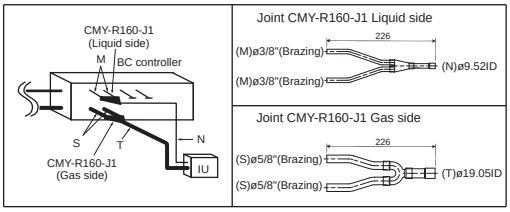

Fig. 3-2-3AA

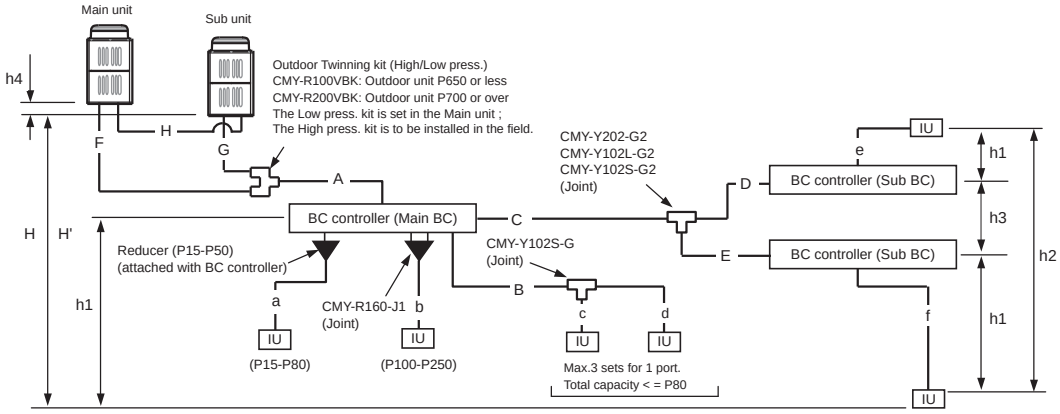

Fig. 3-2-3A Piping scheme

IU : Indoor unit

Table3-2-3-1. Piping length limitation (m [ft.])

Item	Piping in the figure	Max. length	Max. equivalent length
Total piping length	F+G+H+A+B+C+D+E+a+b+c+d+e+f	*1	-
Farthest IU from OU	F(G)+A+C+E+f	165 [541']	190 [623']
Distance between OU and BC	F(G)+A	110 [360'] *1	110 [360'] *1
Farthest IU from BC controller	B+d or C+D+e or C+E+f	40 [131'] *2*3	40 [131'] *2*3
Heignt between OU and IU (OU above IU)	H	50 [164'] *6	-
Heignt between OU and IU (OU under IU)	H'	40 [131'] *7	-
Height between IU and BC	h1	15 [49'] (10 [32']) *4	-
Height between IU and IU	h2	15 [49'] (10 [32']) *4	-
Heignt between BC(Main or Sub) and BC(Sub)	h3	15 [49'] (10 [32']) *5	-
Distance between Main unit and Sub unit	F+G or H	5 [16']	-
Height between Main unit and Sub unit	h4	0.1 [0.3']	-

OU : Outdoor Unit ; IU : Indoor Unit ; BC : BC controller
*1. Refer to the section 3-2-4.
*2. Details refer to Fig.3-2-3-1
*3. Farthest Indoor from BC controller "B+d or C+D+e or C+E+f " can exceed 40m till 60m if no Indoor sized P200, P250 connected. Details refer to Fig.3-2-3-1
*4. Distance of Indoor sized P200, P250 from BC must be less than 10m, if any.
*5. When using 2 Sub BC controllers, max. height "h3" should be considered.
*6. 90m is available depending on the model and installation conditions. For more detailed information, contact your local distributor.
*7. 60m is available depending on the model and installation conditions. For more detailed information, contact your local distributor.

Table3-2-3-2. Bent equivalent length "M"

Outdoor Model	M (m/bent [ft./bent])
EP400YSHM	0.50 [1.64']
(E)P450YSHM	0.50 [1.64']
(E)P500YSHM	0.50 [1.64']
(E)P550YSHM	0.50 [1.64']
(E)P600YSHM	0.50 [1.64']
P650YSHM	0.50 [1.64']
P700YSHM	0.70 [2.29']
P750YSHM	0.70 [2.29']
P800YSHM	0.70 [2.29']

Fig. 3-2-3-1 Piping length and height between IU and BC controller

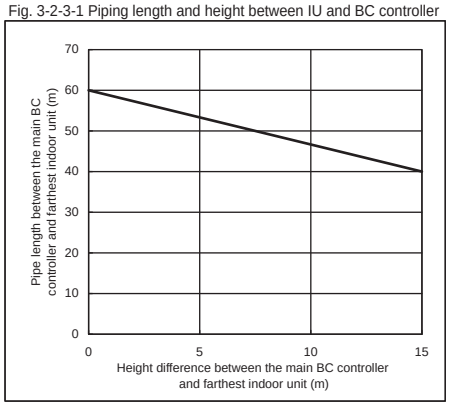

Table3-2-3-3. Piping "A"size selection rule (mm [in.])

Outdoor Model	Pipe(High pressure)	Pipe(Low pressure)
EP400YSHM	ø22.20 [7/8"]	ø28.58 [1-1/8"]
(E)P450YSHM	ø22.20 [7/8"]	ø28.58 [1-1/8"]
(E)P500YSHM	ø22.20 [7/8"]	ø28.58 [1-1/8"]
(E)P550YSHM	ø28.58 [1-1/8"]	ø28.58 [1-1/8"]
(E)P600YSHM	ø28.58 [1-1/8"]	ø28.58 [1-1/8"]
P650YSHM	ø28.58 [1-1/8"]	ø28.58 [1-1/8"]
P700YSHM	ø28.58 [1-1/8"]	ø34.93 [1-3/8"]
P750YSHM	ø28.58 [1-1/8"]	ø34.93 [1-3/8"]
P800YSHM	ø28.58 [1-1/8"]	ø34.93 [1-3/8"]

Table3-2-3-4. Piping "B" size seleciton rule (mm [in.])

Total down-stream Indoor capacity	Pipe(Liquid)	Pipe(Gas)
P140 or less	ø9.52 [3/8"]	ø15.88 [5/8"]

Table3-2-3-5. Piping "C", "D", "E" size selection rule (mm [in.])

Total down-stream Indoor capacity	Pipe(Lequid)	Pipe(HP Gas)	Pipe(LP Gas)
P200 or less	ø9.52 [3/8"]	ø15.88 [5/8"]	ø19.05 [3/4"]
P201 to P300	ø9.52 [3/8"]	ø19.05 [3/4"]	ø22.20 [7/8"]
P301 to P350	ø12.70 [1/2"]	ø19.05 [3/4"]	ø28.58 [1-1/8"]
P351 to P400	ø12.70 [1/2"]	ø22.20 [7/8"]	ø28.58 [1-1/8"]
P401 to P450	ø15.88 [5/8"]	ø22.20 [7/8"]	ø28.58 [1-1/8"]

HP : High pressure, LP:Low pressure

Table3-2-3-6. Piping "F", "G", "H" size selection rule (mm [in.])

Outdoor Model	Pipe(High pressure)	Pipe(Low pressure)
(E)P200YHM	ø15.88 [5/8"]	ø19.05 [3/4"]
(E)P250YSHM	ø19.05 [3/4"]	ø22.20 [7/8"]
(E)P300YSHM	ø19.05 [3/4"]	ø22.20 [7/8"]
P350YSHM	ø19.05 [3/4"]	ø28.58 [1-1/8"]
P400YSHM	ø22.20 [7/8"]	ø28.58 [1-1/8"]

Table3-2-3-7. Piping "a", "b", "c", "d", "e", "f" size selection rule (mm [in.])

Indoor Unit size	Pipe(Lequid)	Pipe(Gas)
P15 to P50	ø6.35 [1/4"]	ø12.70 [1/2"]
P63 to P140	ø9.52 [3/8"]	ø15.88 [5/8"]
P200	ø9.52 [3/8"]	ø19.05 [3/4"]
P250	ø9.52 [3/8"]	ø22.20 [7/8"]

3-2-4. Total piping length restrictions

[PURY-P200, 250, 300YHM-A, PURY-EP200YHM-A]

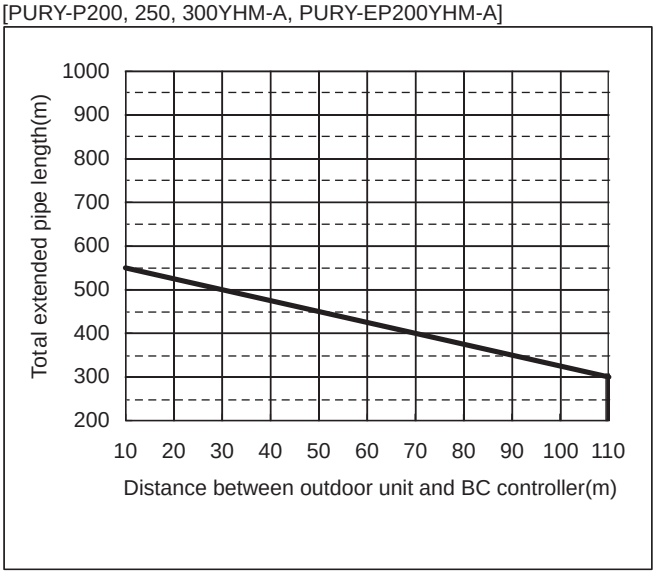

[PURY-P350, 400YHM-A, PURY-EP250,300YHM-A]

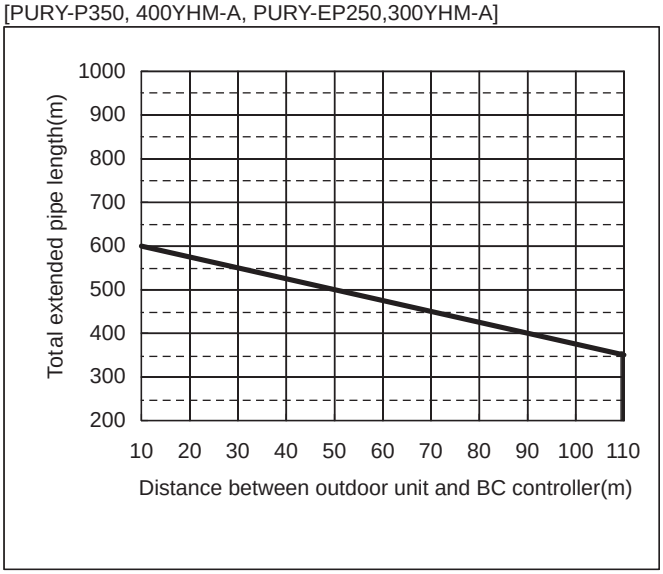

[PURY-P450YSHM-A]

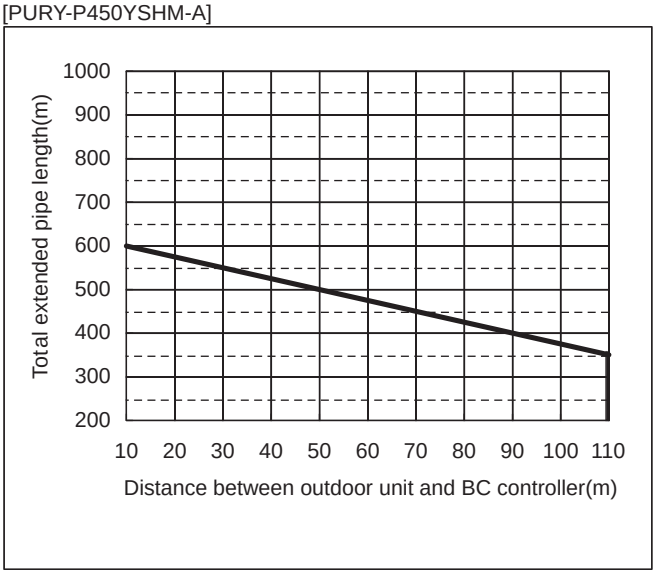

[PURY-P500, 550YSHM-A, PURY-EP400, 450, 500, 550YSHM-A(1)]

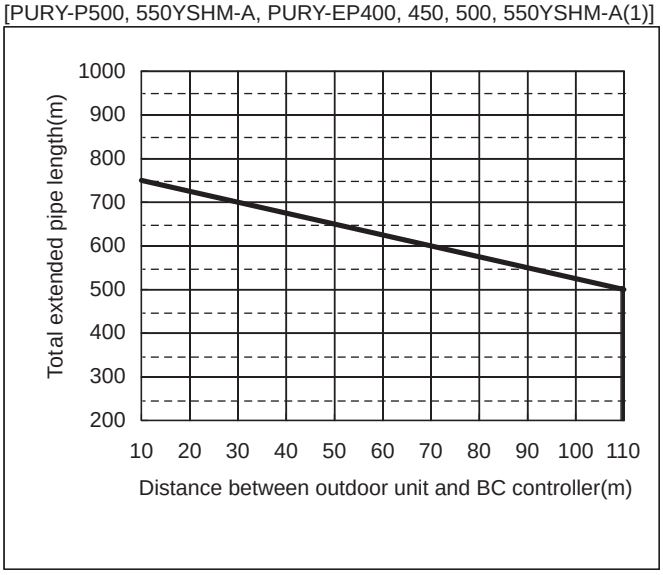

[PURY-P600, 650YSHM-A, PURY-EP600YSHM-A]

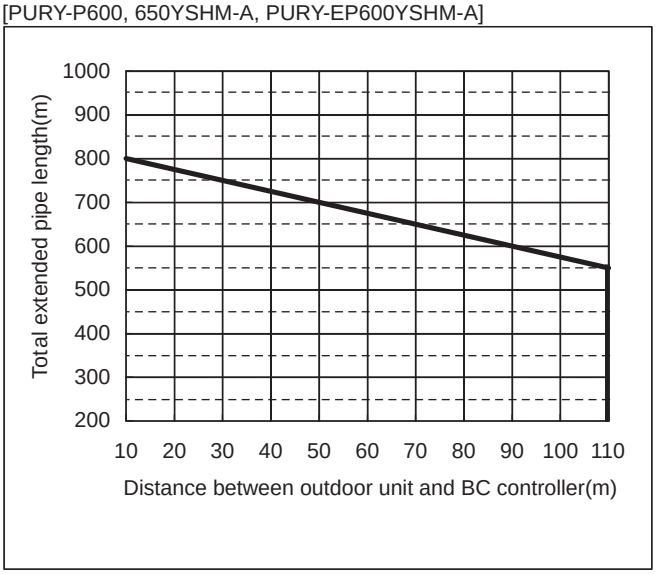

[PURY-P700, 750, 800YSHM-A]

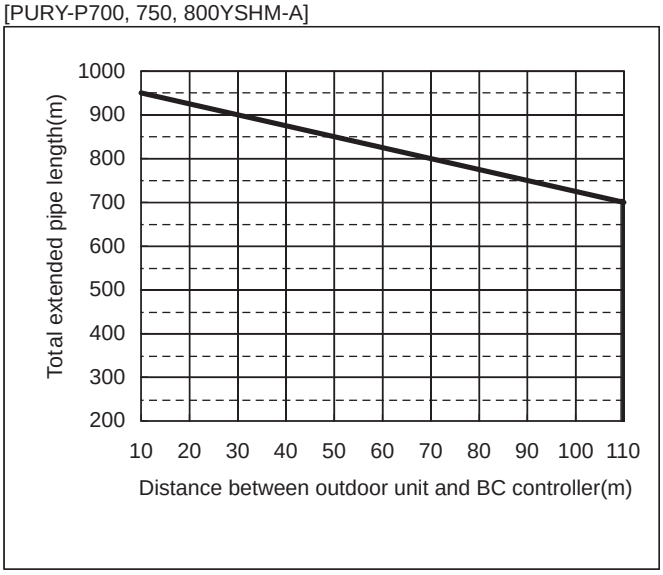

3-3. Refrigerant charging calculation

Sample connection (with 3 BC controller and 6 indoor units)

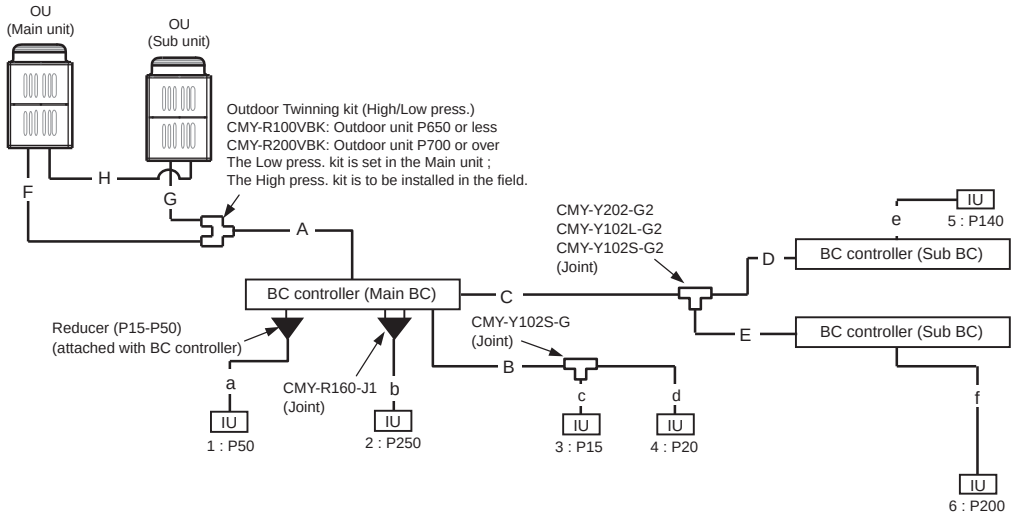

■Amount of additional refrigerant to be charged

Refrigerant for extended pipes (field piping) is not factory-charged to the outdoor unit. Add an appropriate amount of refrigerant for each pipes on site.
Record the size of each high pressure pipe and liquid pipe, and the amout of refrigerant that was charged on the outdoor unit for future reference.

■Calculating the amount of additional refrigerant to be charged

The amount of refrigerant to be charged is calculated with the size of the on-site-installed hige pressure pipes and liquid pipes, and their length.
Calculate the amount of refrigerant to be charged according to the formula below.
Round up the calculation result to the nearest 0.1kg. (i.e., 16.08 kg = 16.1 kg)

<Amount of additional refrigerant to be charged>

■Calculating the amount of additional refrigerant to be charged

Additional refrigerant charge	=	High pressure pipe size Total length of ø 28.58 x 0.36	+	High pressure pipe size Total length of ø 22.20 x 0.23	+	High pressure pipe size Total length of ø 19.05 x 0.16	+	High pressure pipe size Total length of ø 15.88 x 0.11
(kg)		(m) x 0.36(kg/m)		(m) x 0.23(kg/m)		(m) x 0.16(kg/m)		(m) x 0.11(kg/m)

+	Liquid pipe size Total length of ø 15.88 x 0.2	+	Liquid pipe size Total length of ø 12.7 x 0.12	+	Liquid pipe size Total length of ø 9.52 x 0.06	+	Liquid pipe size Total length of ø 6.35 x 0.024
	(m) x 0.20(kg/m)		(m) x 0.12(kg/m)		(m) x 0.06(kg/m)		(m) x 0.024(kg/m)

+

Total outdoor unit Model	Charged amount per BC controller (Standard / Main)
(E)P200	2.0 kg
(E)P250	3.0 kg
(E)P300	
P350	4.5 kg
(E)P400	
(E)P450	5.0 kg
(E)P500	6.0 kg
(E)P550	
(E)P600	
P650	7.5 kg
P700	
P750	9.0 kg
P800	

+

Charged amount per BC controller (Main) HA-type
2.0 kg

+

BC controller (Sub) Total units	Charged amount
1 unit	1.0 kg
2 units	2.0 kg

+

Total capacity of connected indoor units	Charged amount
-80	2.0 kg
81 - 160	2.5 kg
161 - 330	3.0 kg
331 - 390	3.5 kg
391 - 480	4.5 kg
481 - 630	5.0 kg
631 - 710	6.0 kg
711 - 800	8.0 kg
801 - 890	9.0 kg
891 - 1070	10.0 kg
1071 - 1250	12.0 kg
1251 -	14.0 kg

■Amount of factory charged refrigerant

Outdoor unit Model	Charged amount
P200	8.0 kg
EP200	10.5 kg
P250	
P300	
EP250	11.8 kg
EP300	
P350	
P400	

■Sample calculation

			Indoor			
A :	ø28.58	40m	1 : P50	a :	ø6.35	5m
B :	ø9.52	10m	2 : P250	b :	ø9.52	3m
C :	ø12.70	10m	3 : P15	c :	ø6.35	2m
D :	ø9.52	5m	4 : P20	d :	ø6.35	3m
E :	ø9.52	5m	5 : P140	e :	ø9.52	3m
F :	ø22.20	2m	6 : P200	f :	ø9.52	10m
G :	ø22.20	1m				

Total length for each pipe size :

ø28.58	A = 40m
ø22.20	F+G = 2+1 = 3m
ø12.70	C = 10m
ø9.52	B+D+E+b+e+f = 36m
ø6.35	a+c+d =10m

Therefore, additional refrigerant charge = 40x0.36 + 3x0.23 + 10x0.12 + 36x0.06 + 10x0.024 + 9.0 + 2.0 + 2.0 + 6.0
= 37.69kg
≒ 37.7kg

System R2

4. Outdoor Installation

4-1. Requirement on installation site

1. No direct thermal radiation to the unit.
2. No possibility of annoying the neighbors by the sound of the unit.
   Valves and refrigerant flow on the outdoor unit may generate noise.
3. Avoid the sites where strong winds blow.
4. With strength to bear the weight of the unit.
5. Drain flow from the unit is cared at heating mode.
6. Enough space for installation and service as shown at 4-2.
7. Avoid the sites where acidic solutions or chemical sprays (sulfur series) are used frequently.
8. The unit should be secure from combustible gas, oil, steam, chemical gas like acidic solution, sulfur gas and so on.

4-2. Spacing

In case of single installation

- Secure enough space around the unit as shown in the figure.

<A> : Top view
<B> : Side view
<C> : When there is little space up to an obstruction

Ⓐ : Front
Ⓑ : Unit height
Ⓒ : Back
Ⓓ : Air outlet guide (Procured at the site)

(1) If the distance is 300 mm [11-13/16 in.] or more between the rear side and the wall

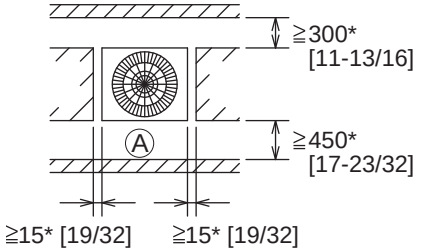

<A>

(2) If the distance is 100 mm [3-15/16 in.] or more between the rear side and the wall

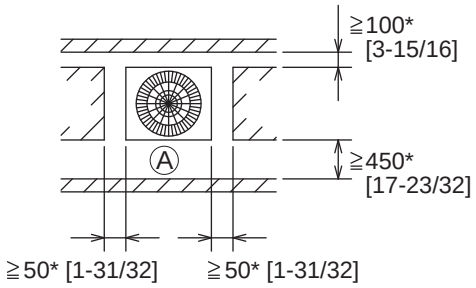

<A>

(3) If the wall height (H) of the front, rear or side exceeds the wall height restriction

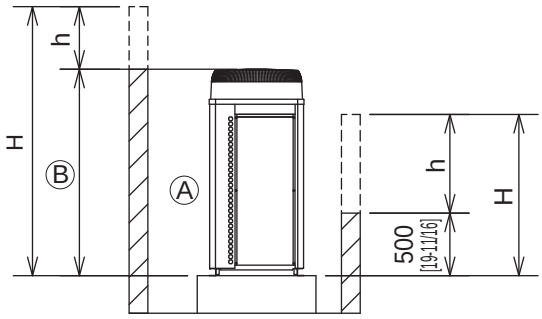

<B>

- When the height of the walls on the front, back or on the sides <H> exceeds the wall height limit as defined below, add the height that exceeds the height limit <h> to the figures that are marked with an asterisk.

<Wall height limit> Front: Up to the unit height
Back: Up to 500mm [19-11/16 in.] from the unit bottom
Side: Up to the unit height

(4) If there are obstacles at the upper part of the unit

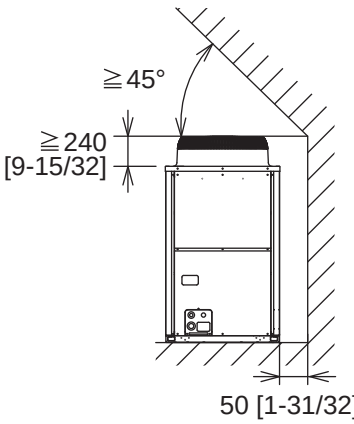

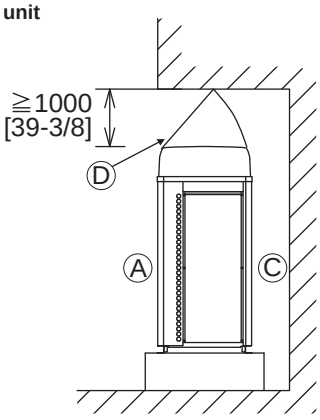

<C>

(Unit : mm [in.])

In case of collective installation and continuous installation

Ⓐ : Front Ⓒ : Wall height (H)

Ⓑ : Must be open

- When multiple units are installed adjacent to each other, secure enough space to allow for air circulation and passageways between groups of units as shown in the figures.
- At least two sides must be left open.
- As with the single installation, add the height that exceeds the height limit <h> to the figures that are marked with an asterisk.
- If there is a wall at both the front and the rear of the unit, install up to six units consecutively in the side direction and provide a space of 1000mm or more as inlet space/passage space for each six units.

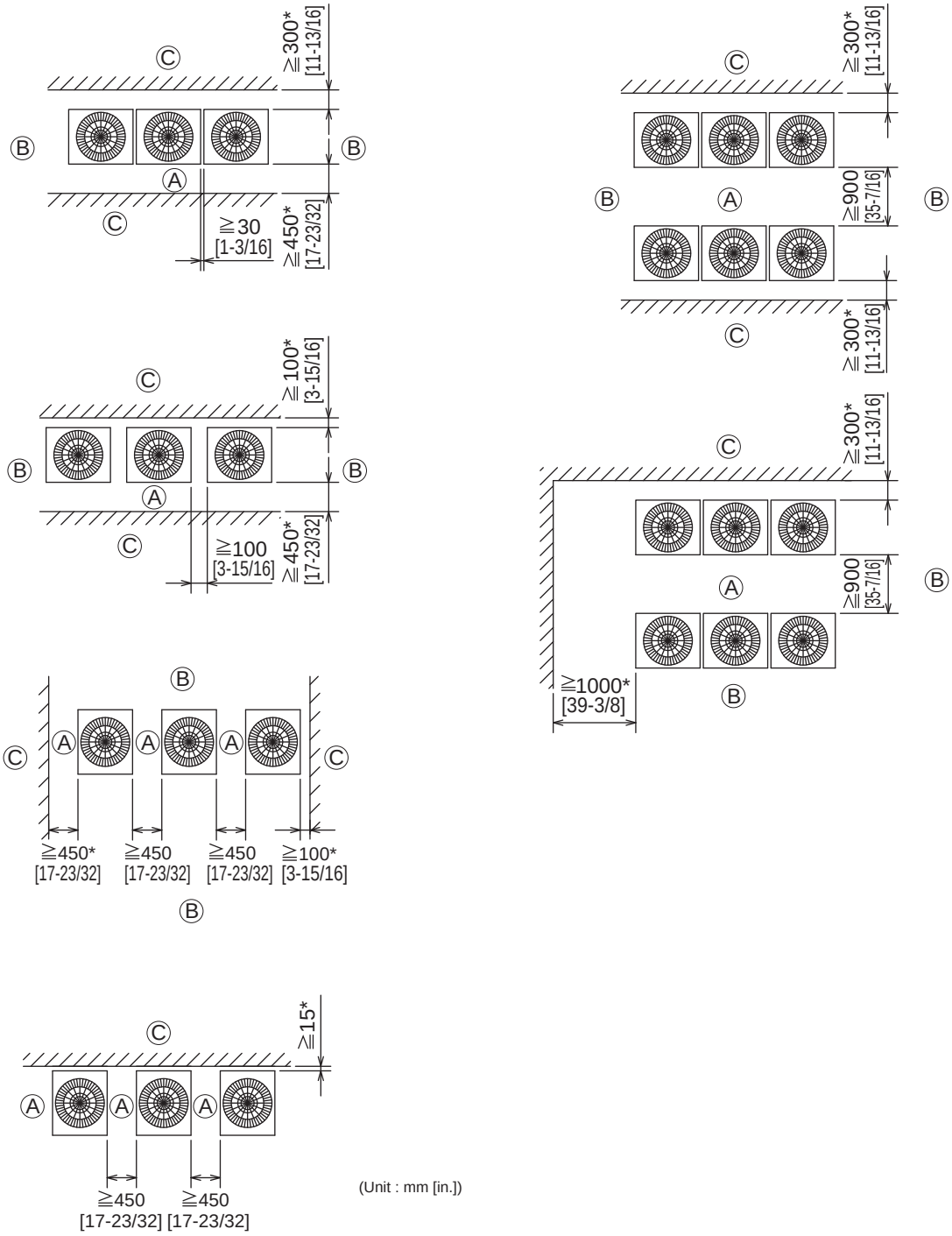

(Unit : mm [in.])

4-3. Piping direction

4-3-1. Lifting method

· When lifting the unit with ropes, run the ropes under the unit and use the lifting hole.
· Support the unit at four points with two ropes, and avoid giving mechanical shock.
· Suspension rope angle must be 40˚ or less, so as to avoid compressing fan guard.
· Use two ropes, each at least 8m [26 ft.] in length
· Use ropes strong enough to support the weight of the unit.
· Always suspend the unit from four corners. (It is dangerous to suspend a unit from two corners and must not be attempted.)
· Use protective pads to keep the ropes from scratching the panels on the unit.

(Unit : m [ft.])

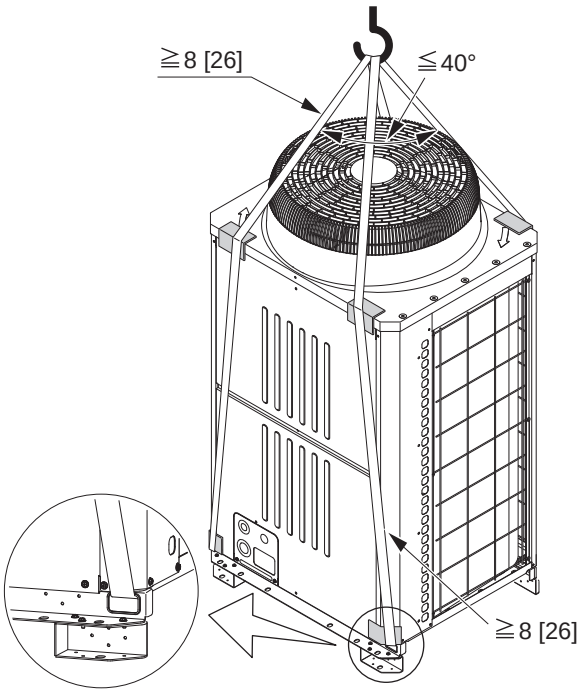

System R2

⚠ CAUTION

Exercise caution when transporting products.

· Products weighing more than 20 kg [45 LBS] should not be carried alone.
· Do not carry the product by the PP bands.
· To avoid the risk of injury, do not touch the heat exchanger fins.
· Plastic bags may pose a risk of choking hazard to children. Tear plastic bags into pieces before disposing of them.
· When lifting and transporting outdoor units with ropes, run the ropes through lifting hole at the unit base. Securely fix the unit so that the ropes will not slide off, and always lift the unit at four points to prevent the unit from falling.

4-3-2. Installation

- Secure the unit with anchor bolts as shown in the figure below so that the unit will not topple over with strong wind or during an earthquake.
- Install the unit on a durable base made of such materials as concrete or angle steel.
- Take appropriate anti-vibration measures (e.g., vibration damper pad, vibration isolation base) to keep vibrations and noise from being transmitted from the unit through walls and floors.
- When using a rubber cushion, install it so that the cushion covers the entire width of the unit leg.
- Install the unit in such a way that the corner of the angle bracket at the base of the unit shown in the figure below is securely supported.
- Install the anchor bolt in such a way that the top end of the anchor bolt do not stick out more than 30 mm [1-3/16 in.].
- This unit is not designed to be anchored with post-installation-type anchor bolts, although by adding fixing brackets anchoring with such type of anchor bolts becomes possible.

⚠ WARNING

Properly install the unit on a surface that can withstand the weight of the unit. Unit installed on an unstable surface may fall and cause injury.

⚠ WARNING

Take appropriate safety measures against strong winds and earthquakes to prevent the unit from falling.

Ⓐ: M10 anchor bolt procured at the site.

Ⓑ: Corner is not seated.

Ⓒ: Fixing bracket for hole-in anchor bolt (3 locations to fix with screws).

Ⓓ: Detachable leg

<Without detachable leg>

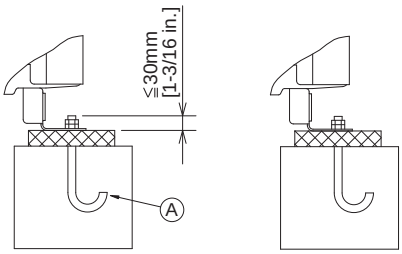

Install the unit in such a way that the corner of the angle bracket at the base of the unit shown in the figure is securely supported. The brackets may bend if they are not securely supported.

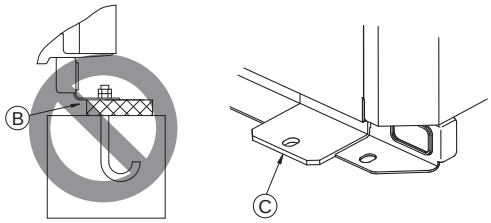

<With detachable leg>

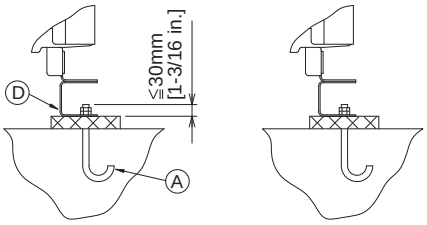

Install the unit in such a way that the corner of the angle bracket at the base of the unit shown in the figure is securely supported. The brackets may bend if they are not securely supported.

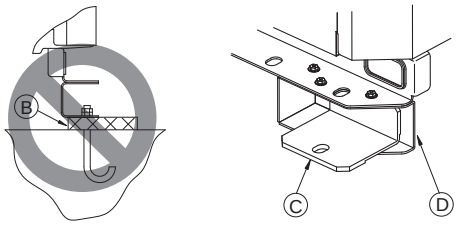

Take into consideration the durability of the base, water drainage route (Drain water is discharged from outdoor units during operation.), piping route, and wiring route when performing foundation work.

4-3-3. Anchor bolt positions

(Unit : mm [in.])

• Individual installation

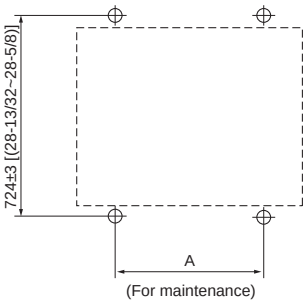

• Collective installation

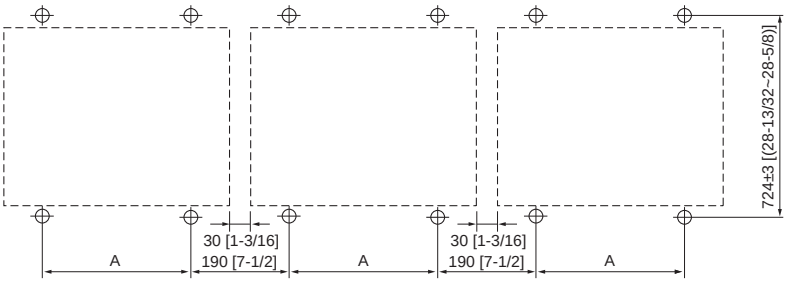

Leave a minimum of 30 mm [1-3/16 in.] between units.

PURY	P200-P300,EP200	P350,P400,EP250,EP300
A	760±2 [29-15/16(29-27/32~30)]	1060±2 [41-3/4(41-21/32~41-13/16)]

4-3-4. Installation

When the pipes and/or cables are routed at the bottom of the unit, make sure that the through hole at the base of the unit does not get blocked with the installation base.
When the pipes are routed at the bottom of the unit, the base should be at least 100 mm [3-15/16 in.] in height.

· P200-P300,EP200 (Unit : mm [in.])

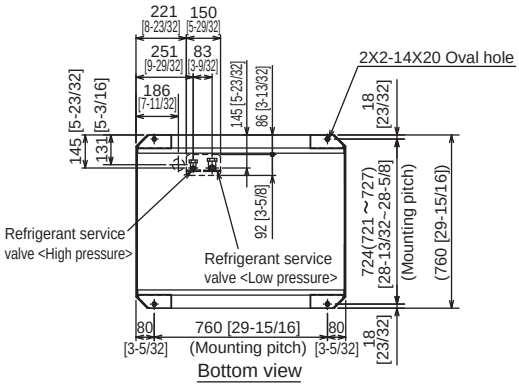

· P350,P400,EP250,EP300 (Unit : mm [in.])

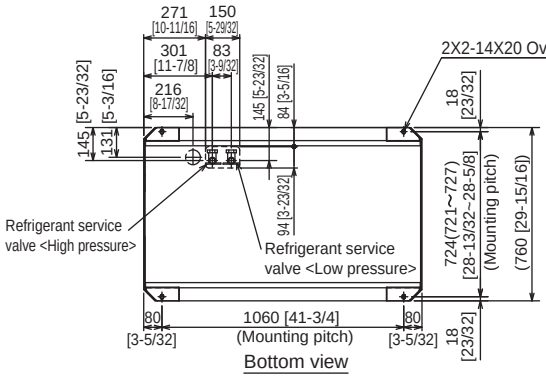

Installation base parallel to the unit's front panel

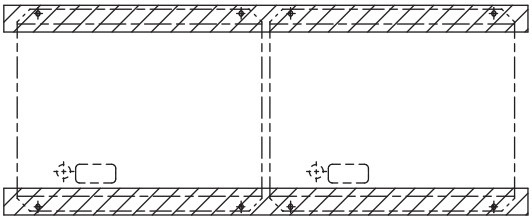

Installation base perpendicular to the unit's front panel

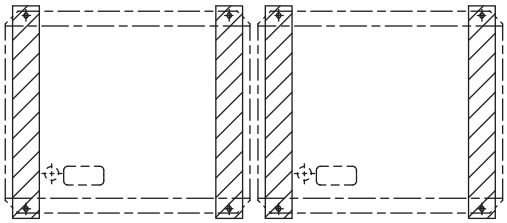

4-3-5. Refrigerant pipe routing

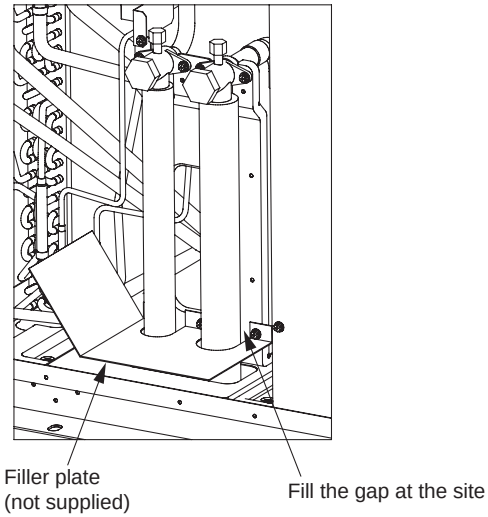

The gaps around the edges of through holes for pipes and wires on the unit allow water or mice to enter the unit and damage its parts. Close these gaps with filler plates.

This unit allows two types of pipe routing:
- Bottom piping
- Front piping

⚠ CAUTION

To prevent small animals, water, and snow from entering the unit and damage its parts, close the gap around the edges of through holes for pipes and wires with filler plates.

※ The figure above shows a unit on which a low-pressure twinning pipe kit is not installed.

System R2

4-3-6. Twinning on the outdoor unit side

- The tilt angle of the twinning pipe
  The tilt angle of the twinning pipe must be within ±15° with the horizontal plane.
  Tilting the twinning pipe more than specified will cause damage to the unit.

- The length of the straight part of the pipe before the branching (high-pressure side)
  For the twinning kit, always use the accessory piping parts.
  The length of the straight part of pipe connected in front of the twinning pipe must be 500 mm [19 in.] or longer.
  (Connect the field piping so that the length of the straight part of pipe connected in front of the twinning pipe can be 500 mm [19 in.] or longer.)
  If the length is less than 500 mm [19 in.], it will cause damage to the unit.

Note. Refer to the figure below for the installation position of the twinning pipe.

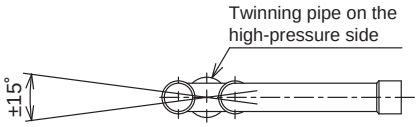

Inclination tolerance of the twinning pipe is ±15° relative to the horizontal plane.

- The piping connection (high-pressure side only)
  Install the pipe between outdoor unit and high-pressure twinning pipe so that the pipe slopes down toward the twinning pipe.

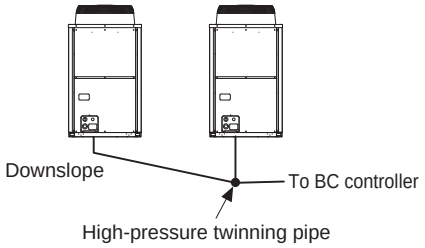

When high-pressure twinning pipe is installed above the base of the outdoor unit, it should be installed no more than 200mm [7 in.] from the base.

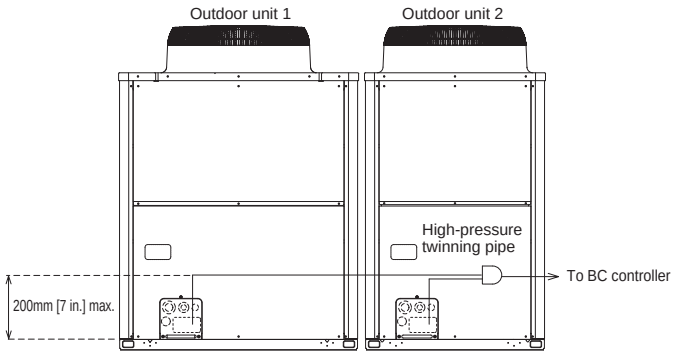

4-3-7. Twinning on the outdoor unit side

See the following drawing for connecting the pipes between the outdoor units.

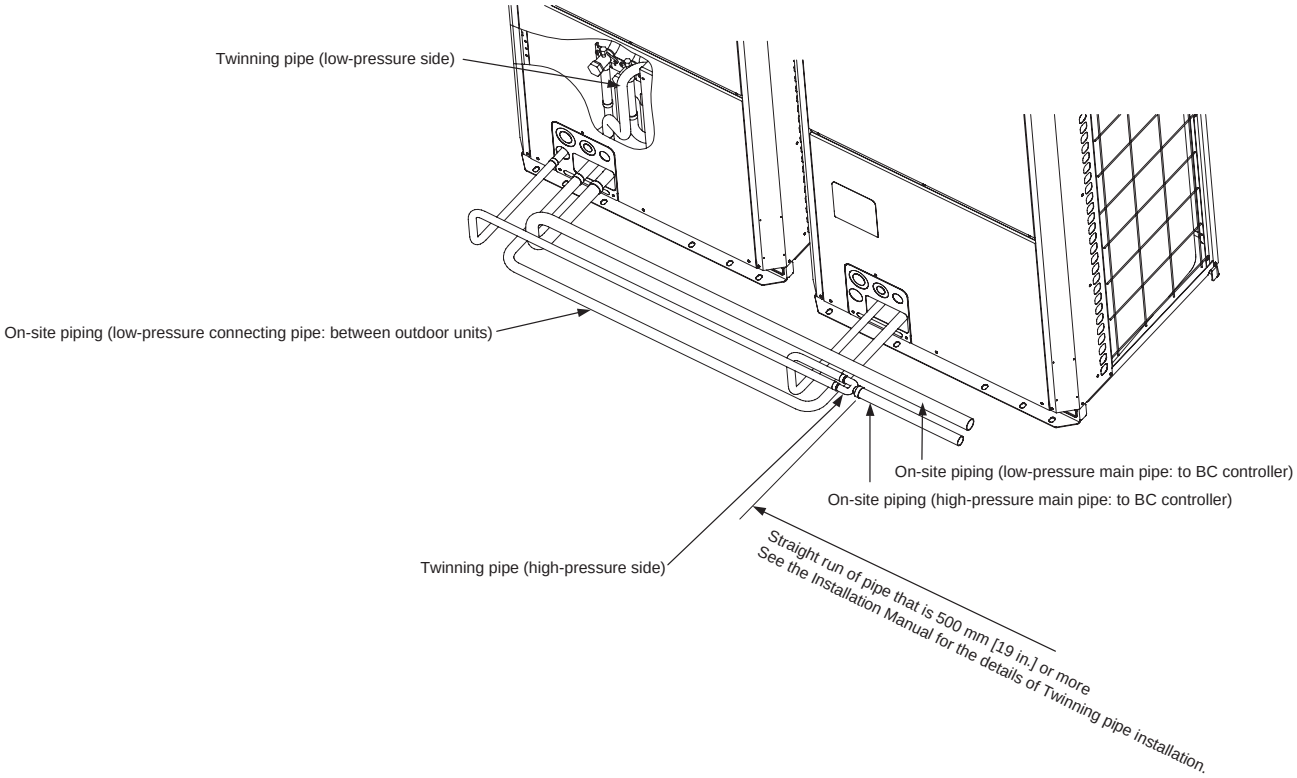

4-4. Weather countermeasure

In cold and/or snowy areas, sufficient countermeasures to wind and snow damages should be taken for operating unit in normal and good condition in winter time. Surround the units with snow nets or fences to protect them from snow. Even in the other areas, full consideration is required for installation of unit in order to prevent abnormal operations caused by wind or snow. **When rain and snow directly fall on unit in the case of air-conditioning operations in 10 or less degrees centigrade outdoor air (50 or less degrees fahrenheit outdoor air) , mount inlet and outlet ducts on unit for assuring stable operations.**

Countermeasure to snow and wind

Prevention the Outdoor unit from wind and snow damages in cold or snowy areas, snow hood shown below is recommended and helpful.

• Snow hood

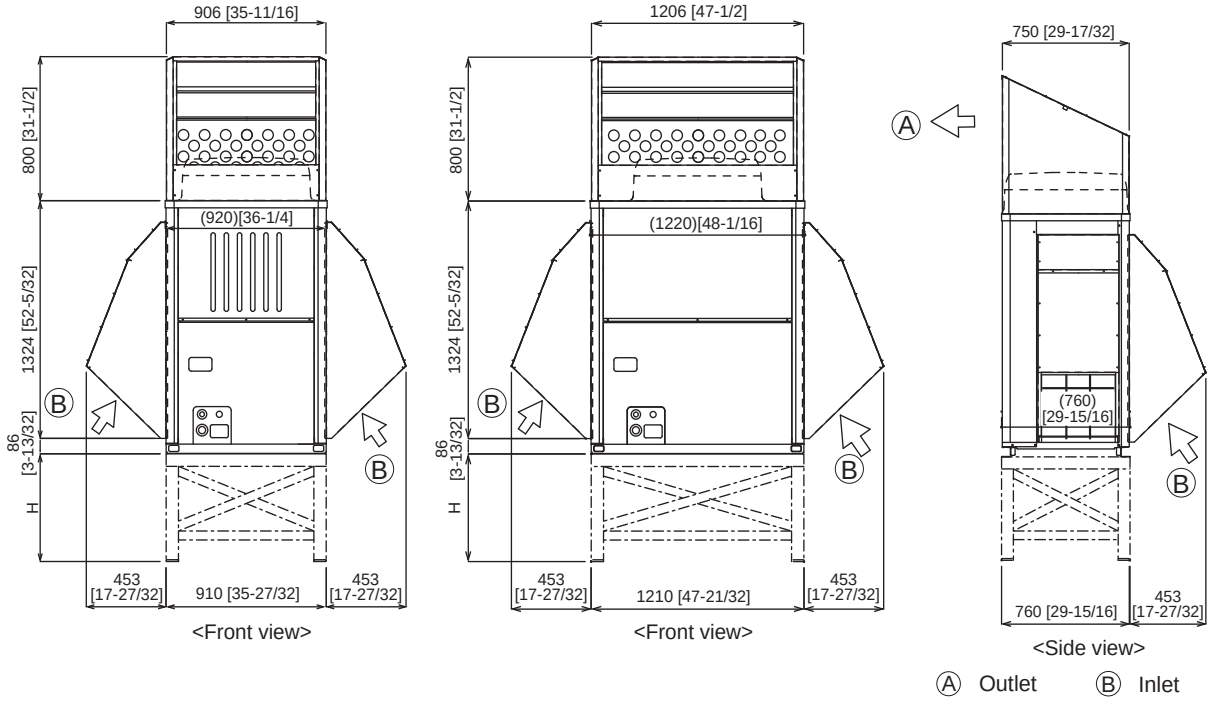

Note:

1. Height of frame base for snow damage prevention (H) shall be twice as high as expected snowfall. Width of frame base shall not exceed that of the unit. The frame base shall be made of angle steel, etc., and designed so that snow and wind slip through the structure. (If frame base is too wide, snow will be accumulated on it.)
2. Install unit so that wind will not directly lash against openings of inlet and outlet ducts.
3. Build frame base at customer referring to this figure.
   Material : Galvanized steel plate 1.2T [1/16 in. T]
   Painting : Overall painting with polyester powder
   Color : Munsell 5Y8/1 (same as that of unit)
4. To install units side by side, install a filler plate between the fan guard and the outlet-side snow food as shown in Figure A.
   (The filler plate provided accommodates the installation pitch of between 30-80 mm [1-3/16~3-5/32 in.].)
5. When the unit is used in a cold region and the heating operation is continuously performed for a long time when the outside air temperature is below freezing, install a heater to the unit base or take other appropriate measures to prevent water from freezing on the base.

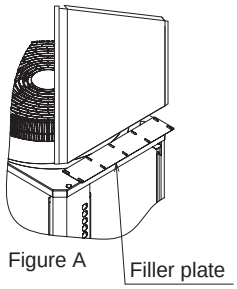

Figure A

Countermeasure to wind

Referring to the figure shown below, take appropriate measures which will suit the actual situation of the place for installation.
A unit installed alone is vulnerable to strong winds. Select the installation site carefully to minimize the effect of winds.
To install a unit in a place where the wind always blows from the same direction, install the unit so that the outlet faces away from the direction of the wind.

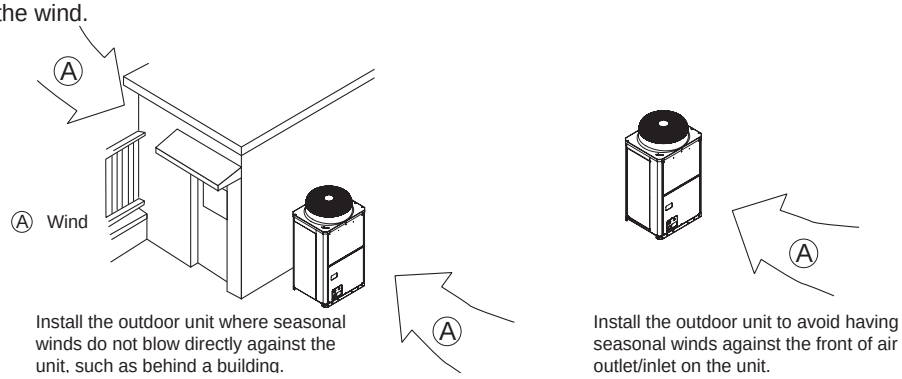

Install the outdoor unit where seasonal winds do not blow directly against the unit, such as behind a building.

Install the outdoor unit to avoid having seasonal winds against the front of air outlet/inlet on the unit.

5. Caution for refrigerant leakage

The installer and/or air conditioning system specialist shall secure safety against refrigerant leakage according to local regulations or standards. The following standard may be applicable if no local regulation or standard is available.

5-1. Refrigerant property

R410A refrigerant is harmless and incombustible. The R410A is heavier than the indoor air in density. Leakage of the refrigerant in a room has possibility to lead to a hypoxia situation. Therefore, the Critial concentration specified below shall not be exceeded even if the leakage happens.

- **Critical concentration**

Critical concentration hereby is the refrigerant concentration in which no human body would be hurt if immediate measures can be taken when refrigerant leakage happens.

Critical concentration of R410A: 0.30kg/m^3
(The weight of refrigeration gas per 1 m^3 air conditioning space.);
* The Critical concentration is subject to ISO5149, EN378-1.

For the CITY MULTI system, the concentration of refrigerant leaked should not have a chance to exceed the Critical concentration in any situntion.

5-2. Confirm the Critical concentration and take countermeasure

The maximum refrigerant leakage concentration (Rmax) is defined as the result of the possible maximum refrigerant weight (Wmax) leaked into a room divided by its room capacity (V).It is referable to Fig.5-1.The refrigerant of Outdoor unit here includes its original charge and additional charge at the site.
The additional charge is calculated according to "**3-3 .Refrigerant charging calculation**" and shall not be over charged at the site.
Procedure 5-2-1~3 tells how to confirm maximum refrigerant leakage concentration (Rmax) and how to take countermeasures against a possible leakage.

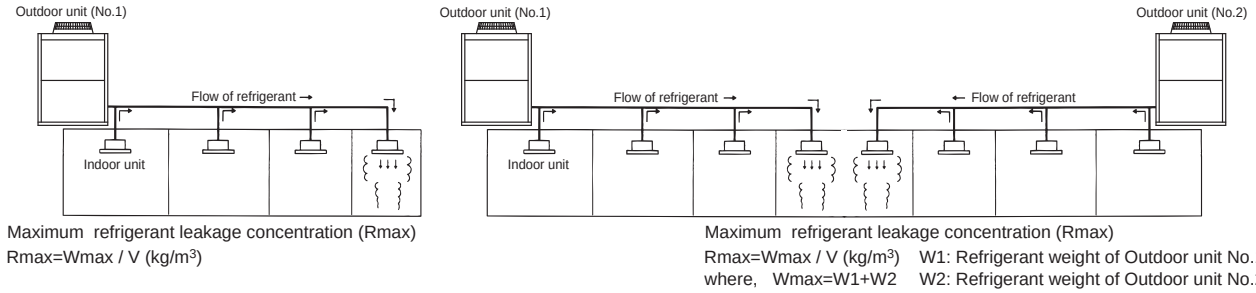

Fig. 5-1 The maximum refrigerant leakage concentration

5-2-1.Find the room capacity (V),
If a room having total opening area more than 0.15% of the floor area at a low position with another room/space, the two rooms/space are considered as one.The total space shall be added up.

5-2-2.Find the possible maximum leakage (Wmax) in the room.If a room has Indoor unit(s) from more than 1 Outdoor unit, add up the refrigerant of the Outdoor units.

5-2-3.Divide (Wmax) by (V) to get the maximum refrigerant leakage concentration (Rmax).

5-2-4.Find if there is any room in which the maximum refrigerant leakage concentration (Rmax) is over 0.30kg/m^3.
If no, then the CITY MULTI is safe against refrigerant leakage.
If yes, following countermeasure is recommended to do at site.
Countermeasure 1:Let-out (making V bigger)
Design an opening of more than 0.15% of the floor area at a low position of the wall to let out the refrigerant whenever leaked.
e.g.make the upper and lower seams of door big enough.
Countermeasure 2:Smaller total charge (making Wmax smaller)
e.g.Avoid connecting more than 1 Outdoor unit to one room.
e.g.Using smaller model size but more Outdoor units.
e.g.Shorten the refrigerant piping as much as possible.
Countermeasure 3:Fresh air in from the ceiling (Ventilation)
As the density of the refrigerant is bigger than that of the air.Fresh air supply from the ceiling is better than air exhausting from the ceiling.
Fresh air supply solution refers to Fig.5-2~4.

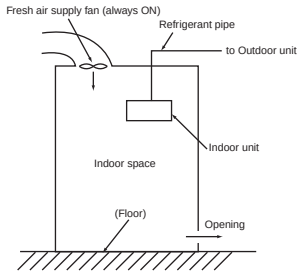

Fig.5-2.Fresh air supply always ON

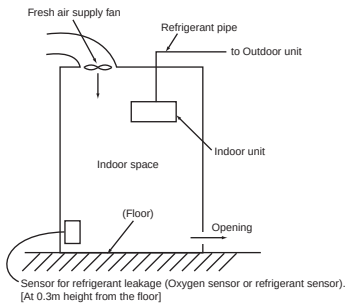

Fig.5-3.Fresh air supply upon sensor action

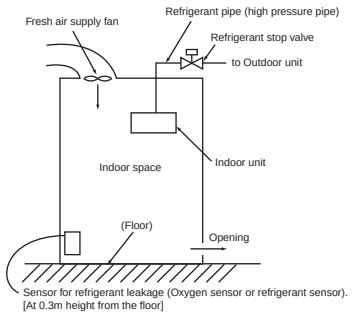

Fig.5-4.Fresh air supply and refrigerant shut-off upon sensor action

Note 1.Countermeasure 3 should be done in a proper way in which the fresh air supply shall be on whenever the leakage happens.
Note 2.In principle, MITSUBISHI ELECTRIC requires proper piping design, installation and air-tight testing after installation to avoid leakage happening.
In the area should earthquake happen, anti-vibration measures should be fully considered.
The piping should consider the extension due to the temperature variation.

CITY MULTI
SYSTEM DESIGN WY SERIES

1. Electrical work ..... 4 - 170
   1-1.General cautions ..... 4 - 170
   1-2.Power supply for Indoor unit and Heat source unit ..... 4 - 171
   1-3.Power cable specifications ..... 4 - 176
   1-4.Power supply examples ..... 4 - 177
2. M-NET control ..... 4 - 180
   2-1.Transmission cable length limitation ..... 4 - 180
   2-2.Transmission cable specifications ..... 4 - 181
   2-3.System configuration restrictions ..... 4 - 182
   2-4.Address setting ..... 4 - 185
3. Piping Design ..... 4 - 198
   3-1.R410A Piping material ..... 4 - 198
   3-2.Piping Design ..... 4 - 199
4. Installation ..... 4 - 203
   4-1.Requirement on installation site ..... 4 - 203
   4-2.Spacing ..... 4 - 203
   4-3.Piping direction ..... 4 - 204
5. Caution for refrigerant leakage ..... 4 - 205
   5-1.Refrigerant property ..... 4 - 205
   5-2.Confirm the Critical concentration and take countermeasure ..... 4 - 205

1. Electrical work

1-1. General cautions

① Follow ordinance of your governmental organization for technical standard related to electrical equipment, wiring regulations, and guidance of each electric power company.
② Wiring for control (hereinafter referred to as transmission cable) shall be (50mm[1-5/8in.] or more) apart from power source wiring so that it is not influenced by electric noise from power source wiring. (Do not insert transmission cable and power source wire in the same conduit.)
③ Be sure to provide designated grounding work to Heat source unit.
④ Give some allowance to wiring for electrical part box of indoor and Heat source unit, because the box is sometimes removed at the time of service work.
⑤ Never connect 380~415V(220~240V) power source to terminal block of transmission cable. If connected,electrical parts will be burnt out.
⑥ Use 2-core shield cable for transmission cable. If transmission cables of different systems are wired with the same multiple-core cable, the resultant poor transmitting and receiving will cause erroneous operations.

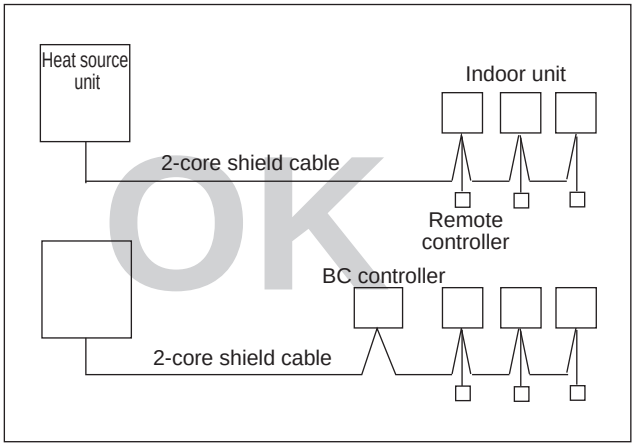

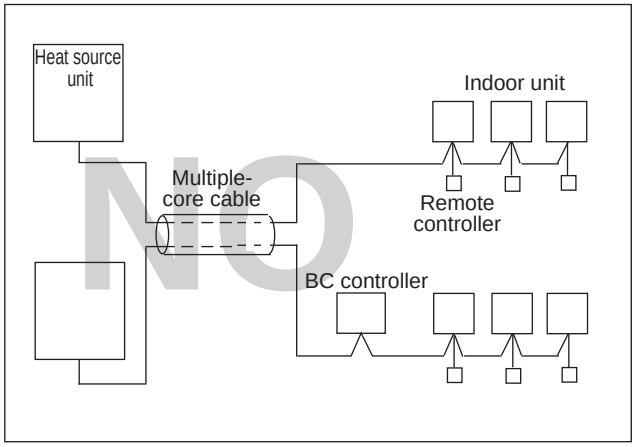

1-2. Power supply for Indoor unit and Heat source unit

1-2-1. Electrical characteristics of Indoor unit

Symbols: MCA : Min.Circuit Amps (=1.25xFLA) FLA : Full Load Amps
IFM :Indoor Fan Motor Output : Fan motor rated output

PMFY-P-VBM-E	Power supply			IFM	
	Volts / Hz	Range +-10%	MCA(A)	Output(kW)	FLA(A)
PMFY-P20VBM-E	220-240V / 50Hz 220V / 60Hz	Max.: 264V Min.: 198V	0.25	0.028	0.20
PMFY-P25VBM-E			0.26	0.028	0.21
PMFY-P32VBM-E			0.26	0.028	0.21
PMFY-P40VBM-E			0.33	0.028	0.26

PLFY-P-VCM-E	Power supply			IFM	
	Volts / Hz	Range +-10%	MCA(A)	Output(kW)	FLA(A)
PLFY-P20VCM-E	220-240V / 50Hz	Max.: 264V Min.: 198V	0.29	0.011	0.23
PLFY-P25VCM-E			0.29	0.015	0.23
PLFY-P32VCM-E			0.35	0.020	0.28
PLFY-P40VCM-E			0.35	0.020	0.28

PLFY-P-VBM-E	Power supply			IFM	
	Volts / Hz	Range +-10%	MCA(A)	Output(kW)	FLA(A)
PLFY-P32VBM-E	220-240V / 50Hz 220V / 60Hz	Max.: 264V Min.: 198V	0.28	0.050	0.22
PLFY-P40VBM-E			0.36	0.050	0.29
PLFY-P50VBM-E			0.36	0.050	0.29
PLFY-P63VBM-E			0.45	0.050	0.36
PLFY-P80VBM-E			0.64	0.050	0.51
PLFY-P100VBM-E			1.25	0.120	1.00
PLFY-P125VBM-E			1.34	0.120	1.07

PLFY-P-VLMD-E	Power supply			IFM	
	Volts / Hz	Range +-10%	MCA(A) (50 / 60Hz)	Output(kW)	FLA(A) (50 / 60Hz)
PLFY-P20VLMD-E	220-240V / 50Hz 220-230V / 60Hz	Max.: 264V Min.: 198V	0.45 / 0.46	0.015	0.36 / 0.37
PLFY-P25VLMD-E			0.45 / 0.46	0.015	0.36 / 0.37
PLFY-P32VLMD-E			0.45 / 0.46	0.015	0.36 / 0.37
PLFY-P40VLMD-E			0.50 / 0.53	0.015	0.40 / 0.42
PLFY-P50VLMD-E			0.51 / 0.54	0.020	0.41 / 0.43
PLFY-P63VLMD-E			0.61 / 0.64	0.020	0.49 / 0.51
PLFY-P80VLMD-E			0.90 / 0.93	0.020	0.72 / 0.74
PLFY-P100VLMD-E			0.94 / 1.10	0.030	0.75 / 0.88
PLFY-P125VLMD-E			1.69 / 1.69	0.078x2	1.35 / 1.35

PEFY-P-VMR-E-L/R	Power supply			IFM	
	Volts / Hz	Range +-10%	MCA(A) (50 / 60Hz)	Output(kW)	FLA(A) (50 / 60Hz)
PEFY-P20VMR-E-L/R	220-240V / 50Hz 220-230V / 60Hz	Max.: 264V Min.: 198V	0.37 / 0.37	0.018	0.29 / 0.29
PEFY-P25VMR-E-L/R			0.37 / 0.37	0.018	0.29 / 0.29
PEFY-P32VMR-E-L/R			0.43 / 0.48	0.023	0.34 / 0.38

PEFY-P-VMS1-E	Power supply			IFM	
	Volts / Hz	Range +-10%	MCA(A) (50 / 60Hz)	Output(kW)	FLA(A) (50 / 60Hz)
PEFY-P15VMS1-E	220-240V / 50Hz 220-240V / 60Hz	Max.: 264V Min.: 198V	0.63 / 0.63	0.096	0.50 / 0.50
PEFY-P20VMS1-E			0.70 / 0.70	0.096	0.56 / 0.56
PEFY-P25VMS1-E			0.75 / 0.75	0.096	0.60 / 0.60
PEFY-P32VMS1-E			0.75 / 0.75	0.096	0.60 / 0.60
PEFY-P40VMS1-E			0.83 / 0.82	0.096	0.66 / 0.65
PEFY-P50VMS1-E			1.02 / 1.00	0.096	0.81 / 0.80
PEFY-P63VMS1-E			1.08 / 1.07	0.096	0.86 / 0.85

Symbols: MCA : Min.Circuit Amps (=1.25xFLA) FLA : Full Load Amps
IFM :Indoor Fan Motor Output : Fan motor rated output

PEFY-P-VMS1L-E	Power supply			IFM	
	Volts / Hz	Range +-10%	MCA(A) (50 / 60Hz)	Output(kW)	FLA(A) (50 / 60Hz)
PEFY-P15VMS1L-E	220-240V / 50Hz 220-240V / 60Hz	Max.: 264V Min.: 198V	0.46 / 0.46	0.096	0.37 / 0.37
PEFY-P20VMS1L-E			0.54 / 0.54	0.096	0.43 / 0.43
PEFY-P25VMS1L-E			0.59 / 0.59	0.096	0.47 / 0.47
PEFY-P32VMS1L-E			0.59 / 0.59	0.096	0.47 / 0.47
PEFY-P40VMS1L-E			0.68 / 0.68	0.096	0.54 / 0.54
PEFY-P50VMS1L-E			0.84 / 0.84	0.096	0.67 / 0.67
PEFY-P63VMS1L-E			0.91 / 0.91	0.096	0.73 / 0.73

PEFY-P-VMH-E	Power supply			IFM	
	Volts / Hz	Range +-10%	MCA(A) (50 / 60Hz)	Output(kW)	FLA(A) (50 / 60Hz)
PEFY-P40VMH-E	220-240V / 50Hz 220-240V / 60Hz	Max.: 264V Min.: 198V	1.21 / 1.61	0.08	0.97 / 1.29
PEFY-P50VMH-E			1.21 / 1.61	0.08	0.97 / 1.29
PEFY-P63VMH-E			1.49 / 1.95	0.12	1.19 / 1.56
PEFY-P71VMH-E			1.58 / 2.18	0.14	1.26 / 1.74
PEFY-P80VMH-E			1.85 / 2.40	0.18	1.48 / 1.92
PEFY-P100VMH-E			3.03 / 3.93	0.26	2.42 / 3.14
PEFY-P125VMH-E			3.03 / 3.93	0.26	2.42 / 3.14
PEFY-P140VMH-E			3.10 / 3.98	0.26	2.48 / 3.18
PEFY-P200VMH-E	380-415V / 50Hz 380-415V / 60Hz	Max.: 456V Min.: 342V	2.03 / 2.33	0.76	1.62 / 1.86
PEFY-P250VMH-E			2.50 / 2.88	1.08	2.00 / 2.30

PEFY-P-VMA-E	Power supply			IFM	
	Volts / Hz	Range +-10%	MCA(A)	Output(kW)	FLA(A)
PEFY-P20VMA-E	220-240V / 50Hz 220-240V / 60Hz	Max.: 264V Min.: 198V	1.03	0.085	0.82
PEFY-P25VMA-E			1.03	0.085	0.82
PEFY-P32VMA-E			1.18	0.085	0.95
PEFY-P40VMA-E			1.43	0.085	1.14
PEFY-P50VMA-E			1.54	0.085	1.23
PEFY-P63VMA-E			2.22	0.121	1.78
PEFY-P71VMA-E			2.46	0.121	1.97
PEFY-P80VMA-E			2.47	0.121	1.98
PEFY-P100VMA-E			3.30	0.244	2.64
PEFY-P125VMA-E			3.39	0.244	2.71
PEFY-P140VMA-E			3.29	0.244	2.63

PEFY-P-VMAL-E	Power supply			IFM	
	Volts / Hz	Range +-10%	MCA(A)	Output(kW)	FLA(A)
PEFY-P20VMAL-E	220-240V / 50Hz 220-240V / 60Hz	Max.: 264V Min.: 198V	0.92	0.085	0.74
PEFY-P25VMAL-E			0.92	0.085	0.74
PEFY-P32VMAL-E			1.07	0.085	0.86
PEFY-P40VMAL-E			1.32	0.085	1.06
PEFY-P50VMAL-E			1.40	0.085	1.12
PEFY-P63VMAL-E			2.08	0.121	1.67
PEFY-P71VMAL-E			2.32	0.121	1.86
PEFY-P80VMAL-E			2.36	0.121	1.89
PEFY-P100VMAL-E			3.19	0.244	2.55
PEFY-P125VMAL-E			3.27	0.244	2.62
PEFY-P140VMAL-E			3.17	0.244	2.53

PEFY-P-VMH-E-F	Power supply			IFM	
	Volts / Hz	Range +-10%	MCA(A) (50 / 60Hz)	Output(kW)	FLA(A) (50 / 60Hz)
PEFY-P80VMH-E-F	220-240V / 50Hz 208-230V / 60Hz	Max.: 264V Min.: 187V	0.92 / 1.15	0.09	0.73 / 0.92
PEFY-P140VMH-E-F			1.58 / 1.84	0.14	1.26 / 1.47
PEFY-P200VMH-E-F	380-415V / 50Hz 380-415V / 60Hz	Max.: 456V Min.: 342V	0.73 / 0.93	0.20	0.58 / 0.74
PEFY-P250VMH-E-F			0.85 / 1.08	0.23	0.68 / 0.86

Symbols: MCA : Min.Circuit Amps (=1.25xFLA) FLA : Full Load Amps
IFM :Indoor Fan Motor Output : Fan motor rated output

PKFY-P-VBM-E	Power supply			IFM	
	Volts / Hz	Range +-10%	MCA(A)	Output(kW)	FLA(A)
PKFY-P15VBM-E	220-240V / 50Hz 220V / 60Hz	Max.: 264V Min.: 198V	0.25	0.017	0.20
PKFY-P20VBM-E			0.25	0.017	0.20
PKFY-P25VBM-E			0.25	0.017	0.20

PKFY-P-VHM-E	Power supply			IFM	
	Volts / Hz	Range +-10%	MCA(A)	Output(kW)	FLA(A)
PKFY-P32VHM-E	220-240V / 50Hz 220V / 60Hz	Max.: 264V Min.: 198V	0.38	0.030	0.30
PKFY-P40VHM-E			0.38	0.030	0.30
PKFY-P50VHM-E			0.38	0.030	0.30

PKFY-P-VKM-E	Power supply			IFM	
	Volts / Hz	Range +-10%	MCA(A)	Output(kW)	FLA(A)
PKFY-P63VKM-E	220-240V / 50Hz 220V / 60Hz	Max.: 264V Min.: 198V	0.36	0.056	0.29
PKFY-P100VKM-E			0.63	0.056	0.50

PCFY-P-VKM-E	Power supply			IFM	
	Volts / Hz	Range +-10%	MCA(A)	Output(kW)	FLA(A)
PCFY-P40VKM-E	220-240V / 50Hz 220V / 60Hz	Max.: 264V Min.: 198V	0.35	0.090	0.28
PCFY-P63VKM-E			0.41	0.095	0.33
PCFY-P100VKM-E			0.81	0.160	0.65
PCFY-P125VKM-E			0.95	0.160	0.76

PFFY-P-VKM-E	Power supply			IFM	
	Volts / Hz	Range +-10%	MCA(A)	Output(kW)	FLA(A)
PFFY-P20VKM-E	220-240V / 50Hz	Max.: 264V Min.: 198V	0.25	0.03x2	0.20
PFFY-P25VKM-E			0.25	0.03x2	0.20
PFFY-P32VKM-E			0.25	0.03x2	0.20
PFFY-P40VKM-E			0.30	0.03x2	0.24

PFFY-P-VLEM-E	Power supply			IFM	
	Volts / Hz	Range +-10%	MCA(A) (50 / 60Hz)	Output(kW)	FLA(A) (50 / 60Hz)
PFFY-P20VLEM-E	220-240V / 50Hz 208-230V / 60Hz	Max.: 264V Min.: 187V	0.24 / 0.31	0.015	0.19 / 0.25
PFFY-P25VLEM-E			0.24 / 0.31	0.015	0.19 / 0.25
PFFY-P32VLEM-E			0.36 / 0.38	0.018	0.29 / 0.30
PFFY-P40VLEM-E			0.40 / 0.41	0.030	0.32 / 0.33
PFFY-P50VLEM-E			0.50 / 0.51	0.035	0.40 / 0.41
PFFY-P63VLEM-E			0.58 / 0.59	0.050	0.46 / 0.47

Symbols: MCA : Min.Circuit Amps (=1.25xFLA) FLA : Full Load Amps
IFM :Indoor Fan Motor Output : Fan motor rated output

PFFY-P-VLRM-E	Power supply			IFM	
	Volts / Hz	Range +-10%	MCA(A) (50 / 60Hz)	Output(kW)	FLA(A) (50 / 60Hz)
PFFY-P20VLRM-E	220-240V / 50Hz 208-230V / 60Hz	Max.: 264V Min.: 187V	0.24 / 0.31	0.015	0.19 / 0.25
PFFY-P25VLRM-E			0.24 / 0.31	0.015	0.19 / 0.25
PFFY-P32VLRM-E			0.36 / 0.38	0.018	0.29 / 0.30
PFFY-P40VLRM-E			0.40 / 0.41	0.030	0.32 / 0.33
PFFY-P50VLRM-E			0.50 / 0.51	0.035	0.40 / 0.41
PFFY-P63VLRM-E			0.58 / 0.59	0.050	0.46 / 0.47

PFFY-P-VLRMM-E	Power supply			IFM	
	Volts / Hz	Range +-10%	MCA(A) (50 / 60Hz)	Output(kW)	FLA(A) (50 / 60Hz)
PFFY-P20VLRMM-E	220-240V / 50Hz	Max.: 264V Min.: 198V	0.59 / 0.58	0.096	0.47 / 0.46
PFFY-P25VLRMM-E			0.59 / 0.58	0.096	0.47 / 0.46
PFFY-P32VLRMM-E			0.69 / 0.69	0.096	0.55 / 0.55
PFFY-P40VLRMM-E			0.78 / 0.76	0.096	0.62 / 0.61
PFFY-P50VLRMM-E			0.80 / 0.79	0.096	0.64 / 0.63
PFFY-P63VLRMM-E			0.93 / 0.93	0.096	0.74 / 0.74

GUF-RDH3	Power supply			IFM	
	Volts / Hz	Range +-10%	MCA(A) (50 / 60Hz)	Output(kW)	FLA(A) (50 / 60Hz)
GUF-50RD(H)3	220-240V / 50Hz 220V / 60Hz	Max.: 264V Min.: 198V	1.85 / 1.85	0.081x2	1.48 / 1.48
GUF-100RD(H)3			3.49 / 3.49	0.16x2	2.79 / 2.79

1-2-2. Electrical characteristics of Heat source unit at cooling mode

PQHY-P-YHM	Unit combination	Outdoor units				Compressor		RLA(A)	
		Hz	Volts	Voltage range	MCA(A)	Out-put(kw)	SC(A)	cooling	heating
PQHY-P200YHM-A(-BS)	-	50/60	380 400 415	Max:456 Min:342	16.01	4.6	8	6.6/6.2/6.0	6.9/6.6/6.3
PQHY-P250YHM-A(-BS)	-				17.20	6.3		9.2/8.7/8.4	9.7/9.3/8.9
PQHY-P300YHM-A(-BS)	-				19.13	7.4		12.4/11.8/11.3	13.7/13.0/12.5
PQHY-P400YSHM-A(-BS)	PQHY-P200YHM-A(-BS)				33.96	4.6		13.9/13.2/12.7	14.6/13.8/13.3
	PQHY-P200YHM-A(-BS)					4.6			
PQHY-P450YSHM-A(-BS)	PQHY-P200YHM-A(-BS)				35.54	4.6		16.6/15.7/15.2	17.5/16.7/16.1
	PQHY-P250YHM-A(-BS)					6.3			
PQHY-P500YSHM-A(-BS)	PQHY-P250YHM-A(-BS)				36.06	6.3		19.3/18.3/17.6	20.3/19.3/18.6
	PQHY-P250YHM-A(-BS)					6.3			
PQHY-P550YSHM-A(-BS)	PQHY-P250YHM-A(-BS)				39.20	6.3		22.7/21.5/20.8	24.7/23.4/22.6
	PQHY-P300YHM-A(-BS)					7.4			
PQHY-P600YSHM-A(-BS)	PQHY-P300YHM-A(-BS)				40.24	7.4		26.1/24.8/23.9	28.9/27.4/26.4
	PQHY-P300YHM-A(-BS)					7.4			
PQHY-P650YSHM-A(-BS)	PQHY-P250YHM-A(-BS)				52.69	6.3		23.5/22.3/21.5	24.8/23.6/22.7
	PQHY-P200YHM-A(-BS)					4.6			
	PQHY-P200YHM-A(-BS)					4.6			
PQHY-P700YSHM-A(-BS)	PQHY-P250YHM-A(-BS)				53.40	6.3		26.3/24.9/24.0	27.8/26.4/25.5
	PQHY-P250YHM-A(-BS)					6.3			
	PQHY-P200YHM-A(-BS)					4.6			
PQHY-P750YSHM-A(-BS)	PQHY-P250YHM-A(-BS)				54.10	6.3		29.0/27.5/26.5	30.8/29.3/28.2
	PQHY-P250YHM-A(-BS)					6.3			
	PQHY-P250YHM-A(-BS)					6.3			
PQHY-P800YSHM-A(-BS)	PQHY-P300YHM-A(-BS)				57.58	7.4		32.3/30.7/29.6	35.0/33.2/32.0
	PQHY-P250YHM-A(-BS)					6.3			
	PQHY-P250YHM-A(-BS)					6.3			
PQHY-P850YSHM-A(-BS)	PQHY-P300YHM-A(-BS)				58.97	7.4		35.7/33.9/32.7	39.1/37.2/35.8
	PQHY-P300YHM-A(-BS)					7.4			
	PQHY-P250YHM-A(-BS)					6.3			
PQHY-P900YSHM-A(-BS)	PQHY-P300YHM-A(-BS)				60.36	7.4		39.1/37.2/35.8	43.3/41.1/39.6
	PQHY-P300YHM-A(-BS)					7.4			
	PQHY-P300YHM-A(-BS)					7.4			

1-3. Power cable specifications

Thickness of wire for main power supply, capacities of the switch and system impedance

	Model	Minimum wire thickness (mm^2)			Breaker for current leakage	Local swtich (A)		Breaker for wiring (NFB) (A)	Max..Permissive System Impedance
		Main cable	Branch	Ground		Capacity	Fuse		
Heat source unit	PQHY-P200YHM-A(-BS)	4.0	-	4.0	30A 100mA 0.1sec. or less	25	25	30	(apply to EN61000-3-3)
	PQHY-P250YHM-A(-BS)	4.0	-	4.0	30A 100mA 0.1sec. or less	25	25	30	(apply to EN61000-3-3)
	PQHY-P300YHM-A(-BS)	4.0	-	4.0	30A 100mA 0.1sec. or less	25	25	30	(apply to EN61000-3-3)
Total operating current of the indoor unit	16A or less	1.5	1.5	1.5	20A 30mA 0.1sec. or less	16	16	20	(apply to EN61000-3-3)
	25A or less	2.5	2.5	2.5	30A 30mA 0.1sec. or less	25	25	30	(apply to EN61000-3-3)
	32A or less	4.0	4.0	4.0	40A 30mA 0.1sec. or less	32	32	40	(apply to EN61000-3-3)

*1: Meet technical requirements of IEC61000-3-3

1. Use dedicated power supplies for the outdoor unit and indoor unit. Ensure OC and OS are wired individually.
2. Bear in mind ambient conditions (ambient temperature,direct sunlight, rain water,etc.) when proceeding with the wiring and connections.
3. The wire size is the minimum value for metal conduit wiring. If the voltage drops, use a wire that is one rank thicker in diameter. Make sure the power-supply voltage does not drop more than 10%.
4. Specific wiring requirements should adhere to the wiring regulations of the region.
5. Power supply cords of parts of appliances for outdoor use shall not be lighter than polychloroprene sheathed flexible cord (design 245 IEC57). For example, use wiring such as YZW.
6. A switch with at least 3 mm contact separation in each pole shall be provided by the Air Conditioner installer.

⚠WARNING

- Be sure to use specified wires for connections and ensure no external force is imparted to terminal connections. If connections are not fixed firmly, heating or fire may result.
- Be sure to use the appropriate type of overcurrent protection switch. Note that generated overcurrent may include some amount of direct current.

⚠CAUTION

- Some installation sites may require attachment of an earth leakage breaker for the inverter. If no earth leakage breaker is installed, there is a danger of electric shock.
- Do not use anything other than a breaker and fuse with the correct capacity. Using a fuse or wire of too large capacity may cause malfunction or fire.

Note

- This device is intended for the connection to a power supply system with a maximum permissible system impedance shown in the above table at the interface point (power service box) of the user's supply.
- The user must ensure that this device is connected only to a power supply system which fulfils the requirement above.
  If necessary, the user can ask the public power supply company for the system impedance at the interface point.
- This equipment complies with IEC 61000-3-12 provided that the short-circuit power Ssc is greater than or equal to Ssc(*2) at the interface point between the user's supply and the public system. It is the responsibility of the installer or user of the equipment to ensure, by consultation with the distribution network operator if necessary, that the equipment is connected only to a supply with a short-circuit power Ssc greater than or equal to Ssc(*2).

Ssc(*2)

Model	Ssc(MVA)
PQHY-P200YHM	1.24
PQHY-P250YHM	1.34
PQHY-P300YHM	1.49

1-4. Power supply examples

The local standards and/or regulations is applicable at a higher priority.

1-4-1. PQHY-P200-300YHM

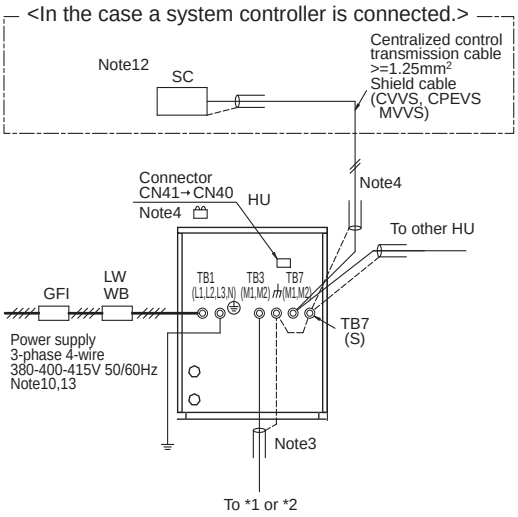

Note:
1 The transmission cable is not-polarity double-wire.
2 Symbol ◎ means a screw terminal for wiring.
3 The shield wire of transmission cable should be connected to the grounding terminal at Heat source unit. All shield wire of M-Net transmission cable among Indoor units should be connected to the S terminal at Indoor unit or all shield wire should be connected together.
The broken line at the scheme means shield wire.
4 When the Heat source unit connected with system controller, power-supply to TB7 of the heat source unit(s) is needed. The connector change from CN41 to CN40 at one of the heat source units will enable the heat source unit to supply power to TB7, or an extra power supplying unit PAC-SC51KUA should be used. The transmission cable (above 1.25mm², shielded, CVVS/CPEVS/MVVS) among Heat source units and system controllers is called centralized control transmission cable. The shield wire of the centralized control transmission cable must be grounded at the Heat source unit whose CN41 is changed to CN40.
5 MA R/C transmission cable (0.3-1.25mm²) must be less than 200m in length, while ME R/C transmission cable (0.3-1.25mm²) must be less than 10m in length. But transmission cable to the ME R/C can be extend using a M-NET cable (>=1.25mm²) when the length is counted in the M-Net length. Both Compact MA and ME R/C transmission cables size 0.75~1.25mm² in thickness.
6 MA remote controller and ME remote controller should not be grouped together.
7 If using 1 or 2 (main/sub) MA remote controller to control more than 1 Indoor unit, use MA transmission cable to connect all the TB15 terminals of the Indoor units. It is called "Grouping".
If using 1 or 2 (main/sub) ME remote controller control more than 1 indoor unit, set address to Indoor unit and ME remote controller. For the method, refer to 2-4. "Address Setting".
8 Indoor board consumes power from TB3. The power balance should be considered according to System Design 2-3 "System configuration restrictions".
9 If Transmission booster is needed, be sure to connect the shield wires to the both sides to the booster.
10 The critical current for choosing power source equipment is approximate 1.4 times of total rated current of the Heat source unit(s) or Indoor unit(s).
11 Numbers shown with ( ) indicates a diameter of the compact remote controller.
12 When System controller (SC) is connected to the system, turn the SW2-1 on.
13 The phases of electricity power must be confirmed to be right used. Phase-reverse, or phase-missing could break the controllers.

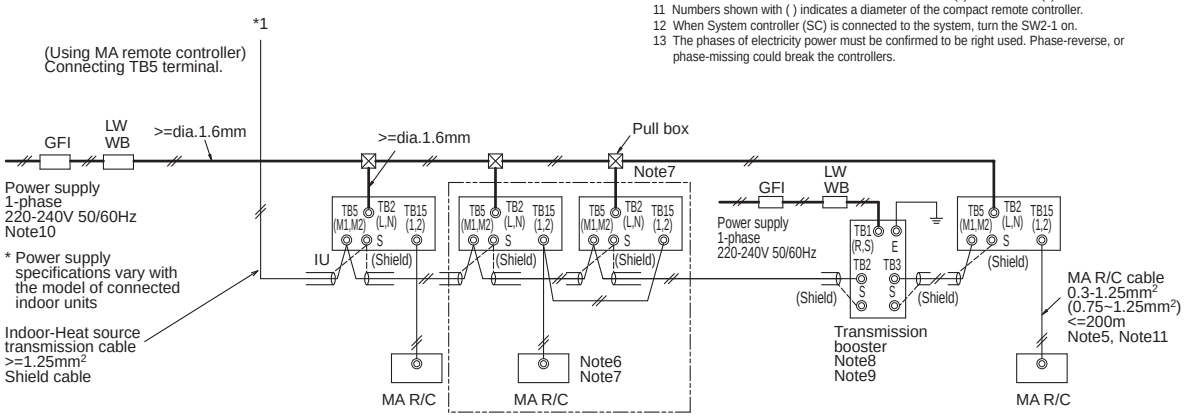

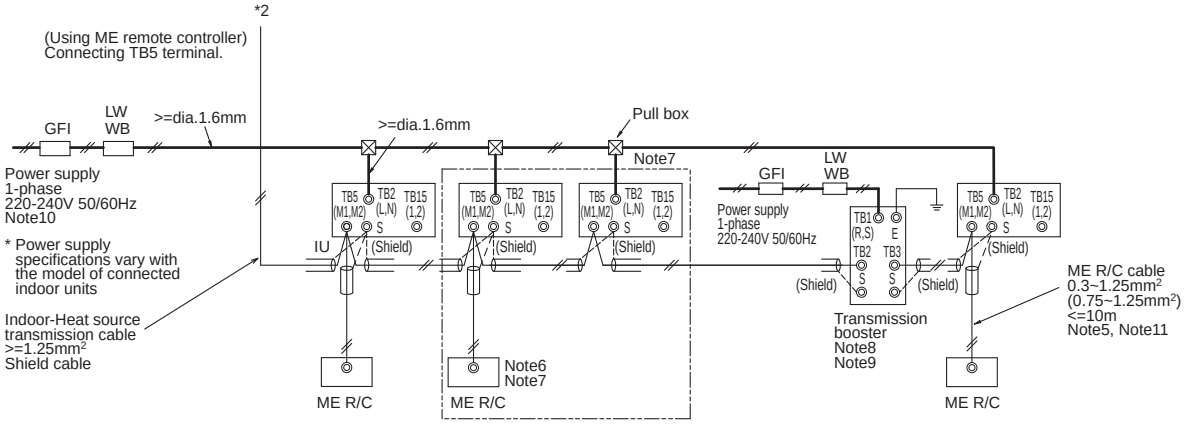

Symbol		Model	Ground-fault interrupter *1, *2	Local switch BC <A>	Local switch OCP*3 <A>	Wiring breaker (NFB) <A>	Minimum Wire thickness Power wire <mm²>	Minimum Wire thickness Earth wire <mm²>
GFI	Ground-fault interrupter	PQHY-P200YHM	30A 100mA 0.1sec. or less	25	25	30	4	4
LW	Local switch	PQHY-P250YHM	30A 100mA 0.1sec. or less	25	25	30	4	4
BC	Breaker capacity	PQHY-P300YHM	30A 100mA 0.1sec. or less	25	25	30	4	4
OCP	Over-current protector							
WB	Wiring breaker							
NFB	Non-fuse breaker							
HU	Heat source unit							
IU	Indoor unit							
SC	System controller							
MA R/C	MA remote controller							
ME R/C	ME remote controller							

*1 The Ground-fault interrupter should support Inverter circuit. (e.g. Mitsubishi Electric's NV-C series or equivalent).
*2 Ground-fault interrupter should combine using of local switch or wiring breaker.
*3 It shows data for B-type fuse of the breaker for current leakage.

System WY

The local standards and/or regulations is applicable at a higher priority.

1-4-2. PQHY-P400-600YSHM

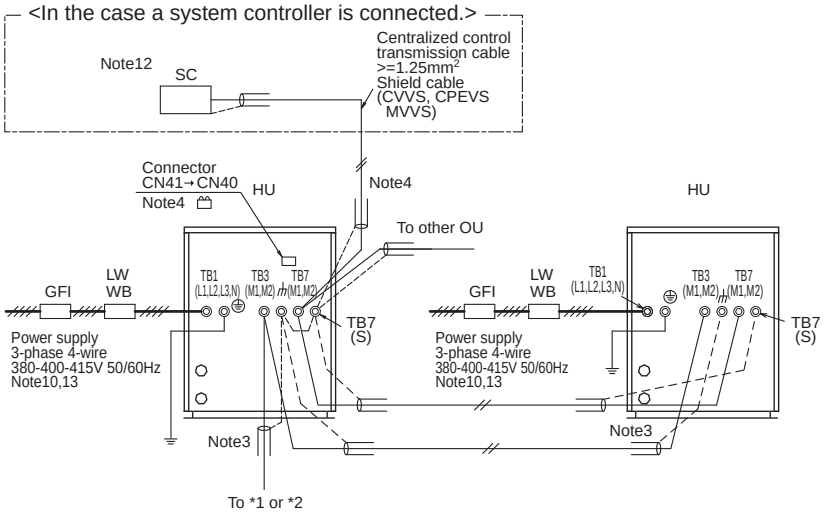

Note:
1 The transmission cable is not-polarity double-wire.
2 Symbol ◎ means a screw terminal for wiring.
3 The shield wire of transmission cable should be connected to the grounding terminal at Heat source unit. All shield wire of M-Net transmission cable among Indoor units should be connected to the S terminal at Indoor unit or all shield wire should be connected together.
The broken line at the scheme means shield wire.
4 When the Heat source unit connected with system controller, power-supply to TB7 of the heat source unit(s) is needed. The connector change from CN41 to CN40 at one of the heat source units will enable the heat source unit to supply power to TB7, or an extra power supplying unit PAC-SC51KUA should be used. The transmission cable (above 1.25mm², shielded, CVVS/CPEVS/MVVS) among Heat source units and system controllers is called centralized control transmission cable. The shield wire of the centralized control transmission cable must be grounded at the Heat source unit whose CN41 is changed to CN40.
5 MA R/C transmission cable (0.3-1.25mm²) must be less than 200m in length, while ME R/C transmission cable (0.3-1.25mm²) must be less than 10m in length. But transmission cable to the ME R/C can be extend using a M-NET cable (>=1.25mm²) when the length is counted in the M-Net length. Both Compact MA and ME R/C transmission cables size 0.75~1.25mm² in thickness.
6 MA remote controller and ME remote controller should not be grouped together.
7 If using 1 or 2 (main/sub) MA remote controller to control more than 1 Indoor unit, use MA transmission cable to connect all the TB15 terminals of the Indoor units. It is called "Grouping".
If using 1 or 2 (main/sub) ME remote controller control more than 1 indoor unit, set address to Indoor unit and ME remote controller. For the method, refer to 2-4. "Address Setting".
8 Indoor board consumes power from TB3. The power balance should be considered according to System Design 2-3 "System configuration restrictions".
9 If Transmission booster is needed, be sure to connect the shield wires to the both sides to the booster.
10 The critical current for choosing power source equipment is approximate 1.4 times of total rated current of the Heat source unit(s) or Indoor unit(s).
11 Numbers shown with ( ) indicates a diameter of the compact remote controller.
12 When System controller (SC) is connected to the system, turn the SW2-1 on.
13. The phases of electricity power must be confirmed to be right used. Phase-reverse, or phase-missing could break the controllers.

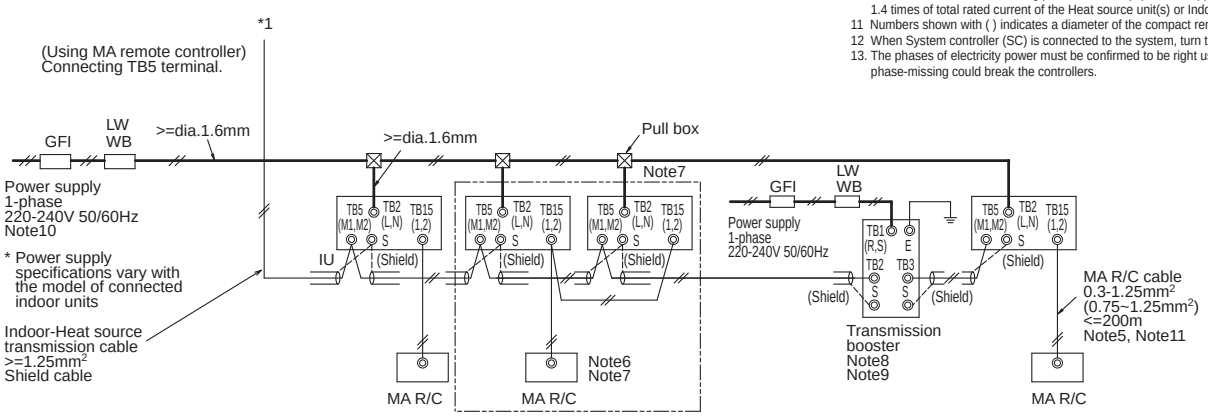

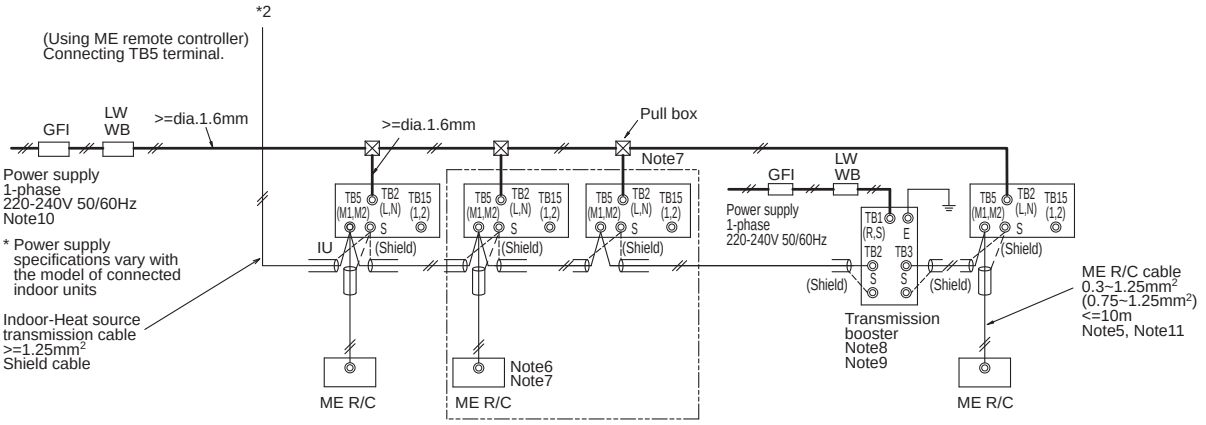

Symbol	
GFI	Ground-fault interrupter
LW	Local switch
BC	Breaker capacity
OCP	Over-current protector
WB	Wiring breaker
NFB	Non-fuse breaker
HU	Heat source unit
IU	Indoor unit
SC	System controller
MA R/C	MA remote controller
ME R/C	ME remote controller

Model	Ground-fault interrupter *1, *2	Local switch BC <A>	Local switch OCP*3 <A>	Wiring breaker (NFB) <A>	Minimum Wire thickness Power wire <mm2>	Minimum Wire thickness Earth wire <mm2>
PQHY-P200YHM	30A 100mA 0.1sec. or less	25	25	30	4	4
PQHY-P250YHM	30A 100mA 0.1sec. or less	25	25	30	4	4
PQHY-P300YHM	30A 100mA 0.1sec. or less	25	25	30	4	4

*1 The Ground-fault interrupter should support Inverter circuit. (e.g. Mitsubishi Electric's NV-C series or equivalent).
*2 Ground-fault interrupter should combine using of local switch or wiring breaker.
*3 It shows data for B-type fuse of the breaker for current leakage.

The local standards and/or regulations is applicable at a higher priority.

1-4-3. PQHY-P650-900YSHM

<In the case a system controller is connected.>

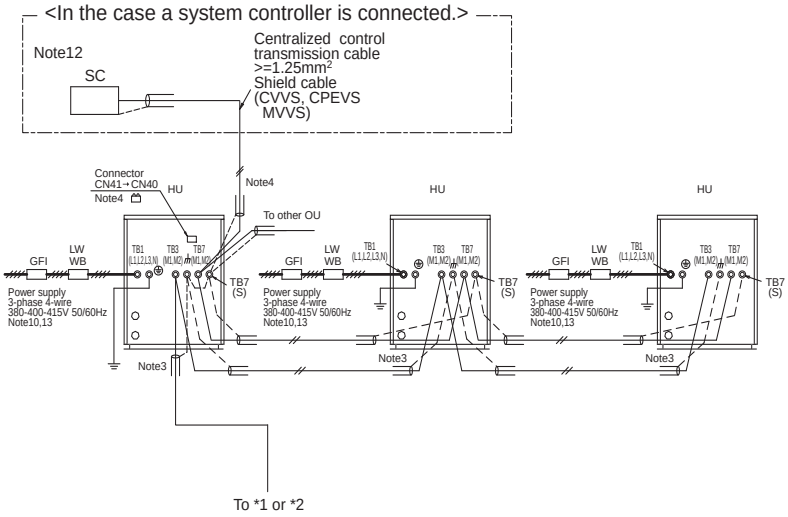

Note:
1 The transmission cable is not-polarity double-wire.
2 Symbol ◎ means a screw terminal for wiring.
3 The shield wire of transmission cable should be connected to the grounding terminal at Heat source unit. All shield wire of M-Net transmission cable among Indoor units should be connected to the S terminal at Indoor unit or all shield wire should be connected together.
The broken line at the scheme means shield wire.
4 When the Heat source unit connected with system controller, power-supply to TB7 of the heat source unit(s) is needed. The connector change from CN41 to CN40 at one of the heat source units will enable the heat source unit to supply power to TB7, or an extra power supplying unit PAC-SC51KUA should be used. The transmission cable (above 1.25mm^2, shielded, CVVS/CPEVS/MVVS) among Heat source units and system controllers is called centralized control transmission cable. The shield wire of the centralized control transmission cable must be grounded at the Heat source unit whose CN41 is changed to CN40.
5 MA R/C transmission cable (0.3-1.25mm^2) must be less than 200m in length, while ME R/C transmission cable (0.3-1.25mm^2) must be less than 10m in length. But transmission cable to the ME R/C can be extend using a M-NET cable (>=1.25mm^2) when the length is counted in the M-Net length. Both Compact MA and ME R/C transmission cables size 0.75~1.25mm^2 in thickness.
6 MA remote controller and ME remote controller should not be grouped together.
7 If using 1 or 2 (main/sub) MA remote controller to control more than 1 Indoor unit, use MA transmission cable to connect all the TB15 terminals of the Indoor units. It is called "Grouping".
If using 1 or 2 (main/sub) ME remote controller control more than 1 indoor unit, set address to Indoor unit and ME remote controller. For the method, refer to 2-4. "Address Setting".
8 Indoor board consumes power from TB3. The power balance should be considered according to System Design 2-3 "System configuration restrictions".
9 If Transmission booster is needed, be sure to connect the shield wires to the both sides to the booster.
10 The critical current for choosing power source equipment is approximate 1.4 times of total rated current of the Heat source unit(s) or Indoor unit(s).
11 Numbers shown with ( ) indicates a diameter of the compact remote controller.
12 When System controller (SC) is connected to the system, turn the SW2-1 on.
13. The phases of electricity power must be confirmed to be right used. Phase-reverse, or phase-missing could break the controllers.

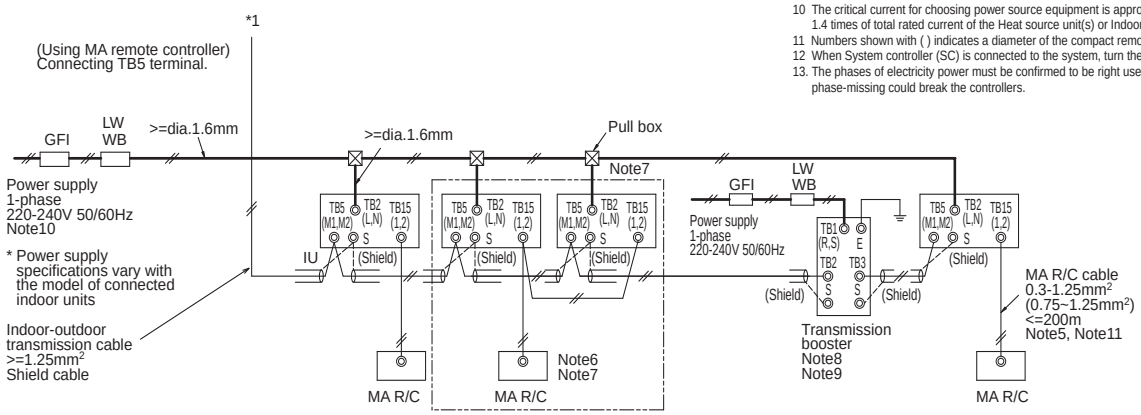

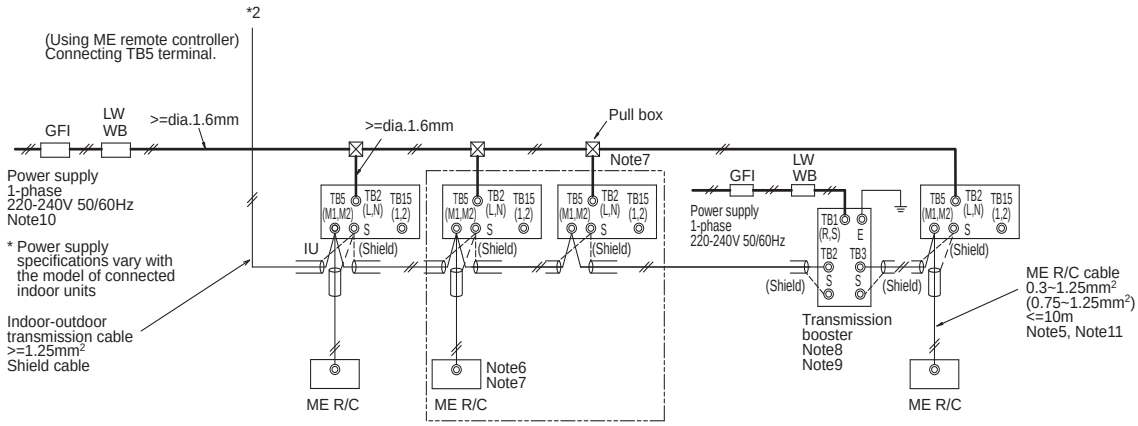

Symbol	
GFI	Ground-fault interrupter
LW	Local switch
BC	Breaker capacity
OCP	Over-current protector
WB	Wiring breaker
NFB	Non-fuse breaker
HU	Heat source unit
IU	Indoor unit
SC	System controller
MA R/C	MA remote controller
ME R/C	ME remote controller

Model	Ground-fault interrupter *1, *2	Local switch BC <A>	Local switch OCP*3 <A>	Wiring breaker (NFB) <A>	Minimum Wire thickness Power wire <mm2>	Minimum Wire thickness Earth wire <mm2>
PQHY-P200YHM	30A 100mA 0.1sec. or less	25	25	30	4	4
PQHY-P250YHM	30A 100mA 0.1sec. or less	25	25	30	4	4
PQHY-P300YHM	30A 100mA 0.1sec. or less	25	25	30	4	4

*1 The Ground-fault interrupter should support Inverter circuit. (e.g. Mitsubishi Electric's NV-C series or equivalent).
*2 Ground-fault interrupter should combine using of local switch or wiring breaker.
*3 It shows data for B-type fuse of the breaker for current leakage.

2-1. Transmission cable length limitation

2-1-1. Using MA Remote controller(PQHY-P-YHM)

Long transmission cable causes voltage down, therefore, the length limitation should be obeyed to secure proper transmission.

Max. length via Heat source (M-NET cable)	L1+L2+L3+L4, L1+L2+L6+L7, L3+L4+L6+L7	<=500m[1640ft.]	1.25mm^2 [AWG16] or thicker
Max. length to Heat source (M-NET cable)	L1+L8, L3+L4, L6, L2+L6+L8, L7	<=200m[656ft.]	1.25mm^2 [AWG16] or thicker
Max. length from MA to Indoor	a1+a2, a1+a2+a3+a4	<=200m[656ft.]	0.3-1.25 mm^2 [AWG22-16]
24VDC to AG-150A	n	<=50m[164ft.]	0.75-2.0 mm^2 [AWG18-14]

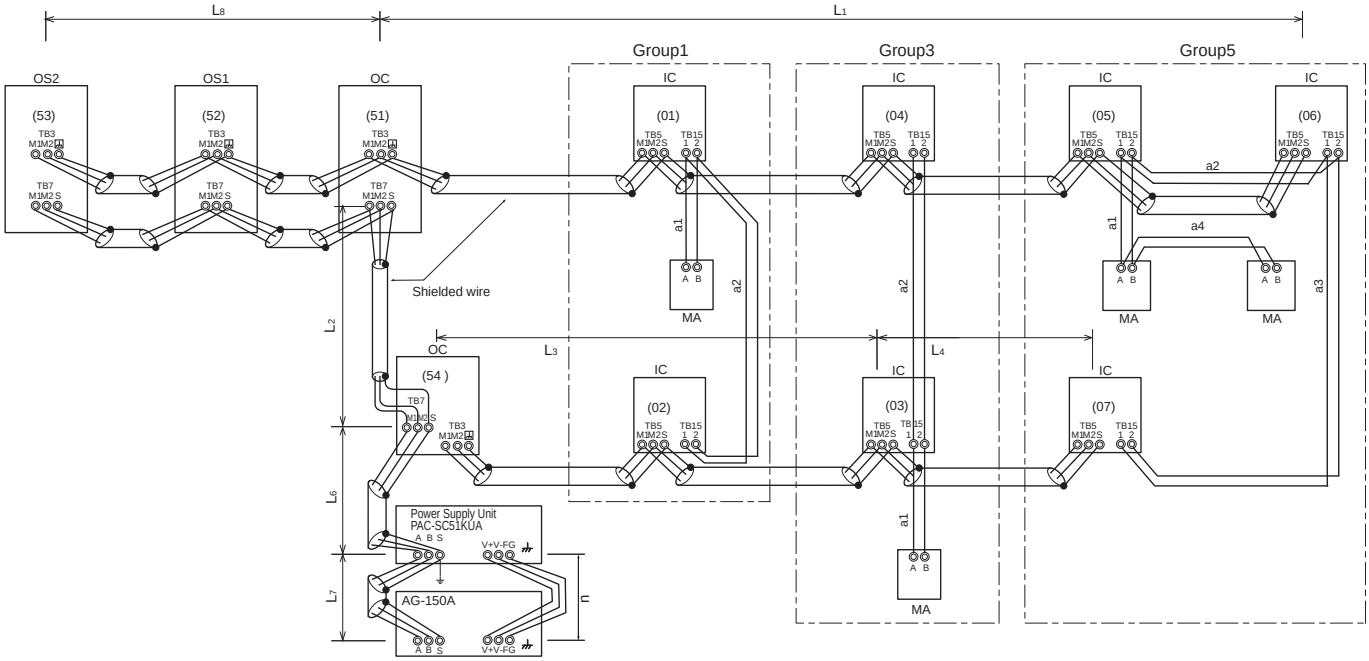

OC, OS1, OS2 : Heat source unit controller; IC: Indoor unit controller; MA: MA remote controller

2-1-2. Using ME Remote controller(PQHY-P-YHM)

Long transmission cable causes voltage down, therefore, the length limitation should be obeyed to secure proper transmission.

Max. length via Heat source (M-NET cable)	L1+L2+L3+L4, L1+L2+L6+L7,L1+L2+L3+L5, L3+L4+L6+L7	<=500m[1640ft.]	1.25mm^2 [AWG16] or thicker
Max. length to Heat source (M-NET cable)	L1+L8, L3+L4, L6, L2+L6+L8, L7, L3+L5	<=200m[656ft.]	1.25mm^2 [AWG16] or thicker
Max. length from ME to Indoor	e1, e2+e3, e4	<=10m[32ft.]*1	0.3-1.25 mm^2 [AWG22-16] *1
24VDC to AG-150A	n	<=50m[164ft.]	0.75-2.0 mm^2 [AWG18-14]

*1. If the length from ME to Indoor exceed 10m, use 1.25 mm^2 [AWG16] shielded cable, but the total length should be counted into Max. length via Heat source.

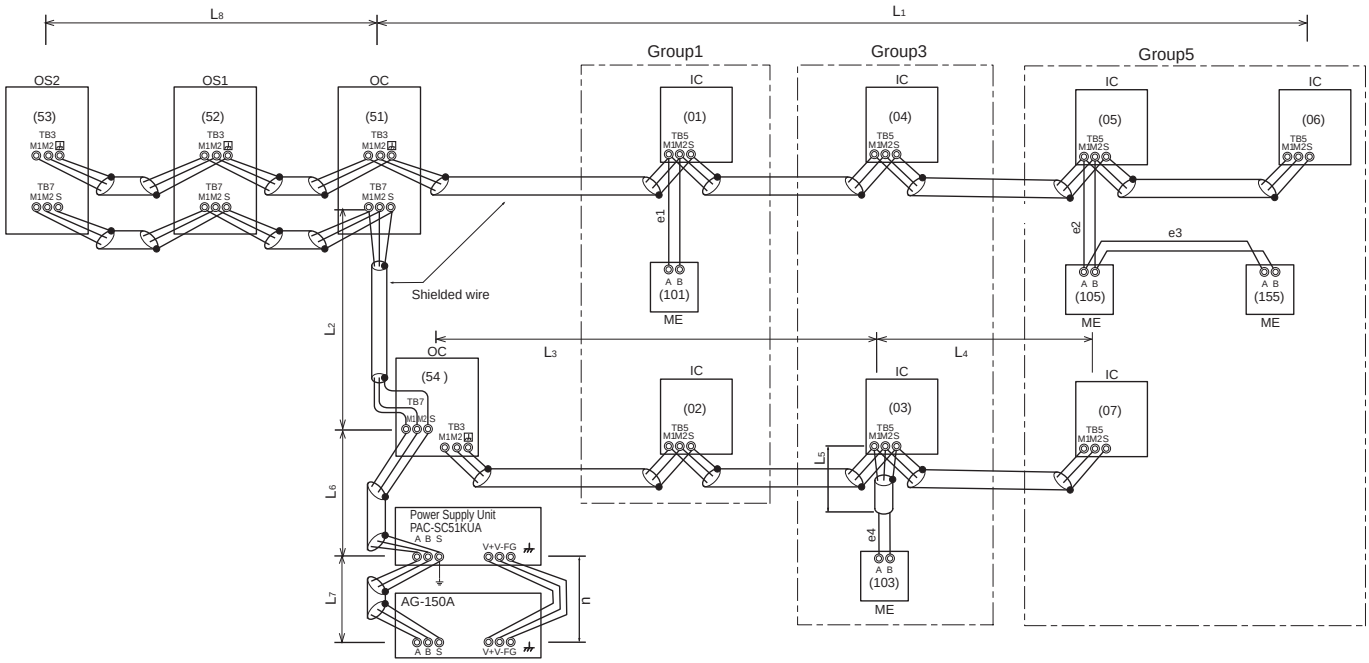

OC, OS1, OS2: Heat source unit controller; IC: Indoor unit controller; ME: ME remote controller

System WY

2-2. Transmission cable specifications

	Transmission cables (Li)	ME Remote controller cables	MA Remote controller cables
Type of cable	Shielding wire (2-core) CVVS, CPEVS or MVVS	Sheathed 2-core cable (unshielded) CVV	
Cable size	More than 1.25mm^2 [AWG16]	0.3～1.25mm^2 [AWG22～16] (0.75～1.25mm^2 [AWG18～16])*1	0.3～1.25mm^2 [AWG22～16] (0.75～1.25mm^2 [AWG18～16])*1
Remarks	—	When 10m [32ft] is exceeded, use cables with the same specification as transmission cables.	Max length : 200m [656ft]

*1 Connected with simple remote controller.

CVVS, MVVS : PVC insulated PVC jacketed shielded control cable
CPEVS : PE insulated PVC jacketed shielded communication cable
CVV : PV insulated PVC sheathed control cable

System WY

2-3. System configuration restrictions

2-3-1. Common restrictions for the CITYMULTI system

For each Heat source unit, the maximum connectable quantity of Indoor unit is specified at its Specifications table.

A) 1 Group of Indoor units can have 1-16 Indoor units;
*OA processing unit GUF-RD(H) is considered as Indoor unit.

B) Maximum 2 remote controllers for 1 Group; (MA/ME remote controllers cannot be present together in 1group.)

C) 1 LOSSNAY unit can interlock maximum 16 Indoor units; 1 Indoor unit can interlock only 1 LOSSNAY unit.

D) Maximum 3 System controllers are connectable when connecting to TB3 of the Heat source unit.

E) Maximum 3 System controllers are connectable when connecting to TB7 of the Heat source unit, if the transmission power is supplied by the Heat source unit.

F) 4 System controllers or more are connectable when connecting to TB7 of the Heat source unit, if the transmission power is supplied by the power supply unit PAC-SC51KUA. Details refer to 2-3-3-C.
*System controller connected as described in D) and E) would have a risk that the failure of connected Heat source unit would stop power supply to the System controller.

2-3-2. Ensuring proper communication power for M-NET

In order to ensure proper communication among Heat source unit, Indoor unit, LOSSNAY, and OA processing unit GUF-RD(H), and Controllers, the transmission power situation for the M-NET should be observed. In some cases, Transmission booster should be used. Taking the power consumption of Indoor unit sized P20-P140 as 1, the equivalent power consumption or supply of others are listed at Table 2-3-1 and Table 2-3-2.

Table 2-3-1 The equivalent power consumption

Indoor, OA unit	Indoor unit	BC controller	MA RC. LOSSNAY	ME Remote Contr.	Timers, System Contr.		ON/OFF Contr.	MN Conrerter	
Sized P20-P140 GUF-50, 100	Sized P200,P250	CMB	PAR-21MAA PAC-YT51CRA(B) PAR-FA32MA LGH-RX-E PZ-60DR-E	PAR-F27MEA PAC-SE51CRA PZ-52SF-E	PAC-SC30GRA PAC-SF44SRA PAC-YT34STA AG150A	GB-50A	PAC-YT40ANRA	CMS -MNF-B	CMS -MNG-E
1	7	2	0	1/4	1/2	3	1	1/2	2

*RC : Remote Controller

Table 2-3-2 The equivalent power supply

Transmission Booster	Power supply unit	Expansion controller	BM ADAPTER	Heat source unit	Heat source unit
PAC-SF46EPA	PAC-SC51KUA	PAC-YG50ECA	BAC-HD150	Connector TB3 and TB7 total *	Connector TB7 only
25	5	6	6	32	6

*If PAC-SC51KUA is used to supply power at TB7 side, no power supply need from Heat source unit at TB7, Connector TB3 itself will therefore have 32.

With the equivalent power consumption values in Table 2-3-1 and Table 2-3-2, PAC-SF46EPA can be designed into the air-conditioner system to ensure proper system communication according to 2-3-2-A, B, C.

2-3-2-A) Firstly, count from TB3 at TB3 side the total quantity of Indoor units, OA process units and ME remote controller, Timers and System controllers. If the total quantity reaches 40, a PAC-SF46EPA should be set. In this case, Indoor unit sized P200, 250 is counted as 7 Indoor units, but MA remote controller(s), LOSSNAY, PZ-60DR-E is NOT counted.

2-3-2-B) Secondly, count from TB7 side to TB3 side the total transmission power consumption. If the total power consumption reaches 32, a PAC-SF46EPAshould be set. Yet, if a PAC-SC51KUAis used to supply power at TB7 side, count from TB3 side only.

2-3-2-C) Thirdly, count from TB7 at TB7 side the total transmission power consumption, If the total power consumption reaches 6, a PAC-SF46EPA should be set.

■ System example

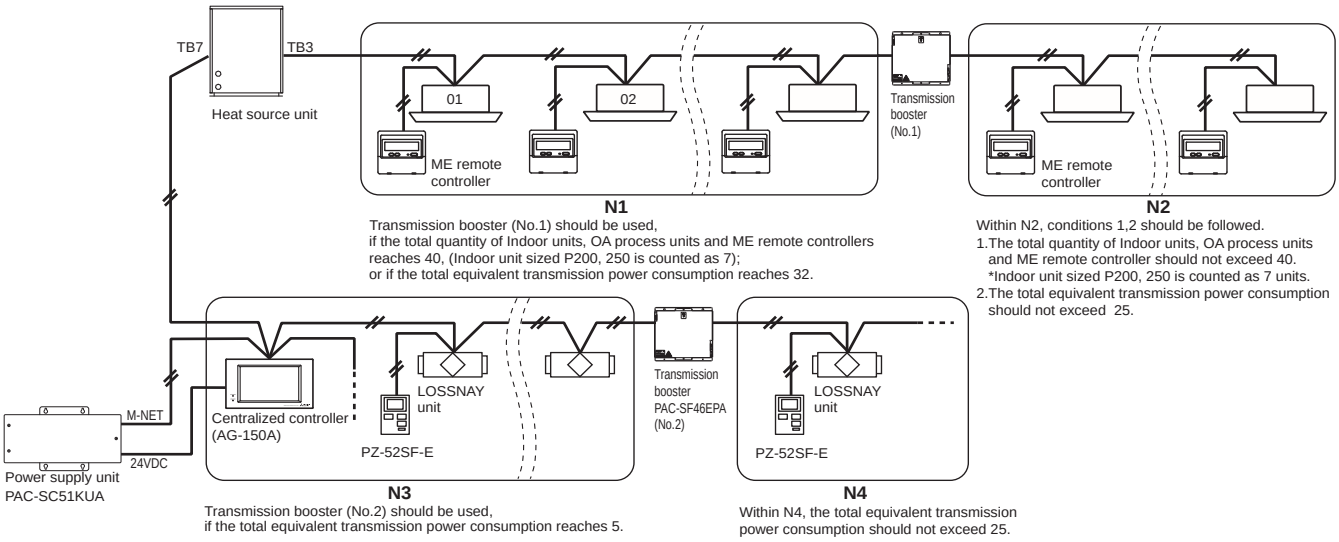

2-3-3. Ensuring proper power supply to System controller

The power to System controller (excluding LMAP02-E) is supplied via M-NET transmission line. M-NET transmission line at TB7 side is called Centralized control transmission line while one at TB3 side is called Indoor-Heat source unit transmission line. There are 3 ways to supply power to the System controller .
A) Connecting to TB3 of the Heat source unit and receiving power from the Heat source unit.
B) Connecting to TB7 of the Heat source unit and receiving power from the Heat source unit.
C) Connecting to TB7 of the Heat source unit but receiving power from power supply unit PAC-SC51KUA.

2-3-3-A. When connecting to TB3 of the Heat source unit and receiving power from the Heat source unit.

Maximum 3 System controllers can be connected to TB3. If there is more than 1 Heat source unit, it is necessary to replace power supply switch connector CN41 with CN40 on one Heat source unit.

Fig. 2-3-3-A

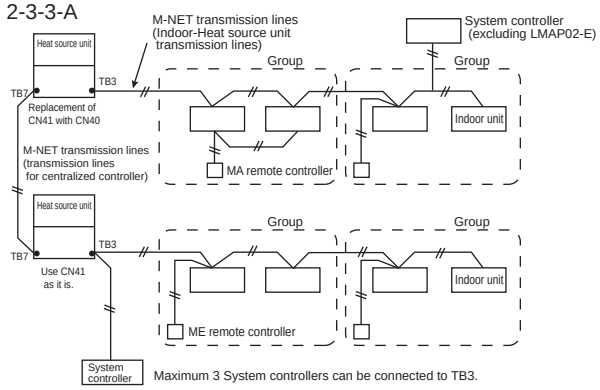

2-3-3-B. When connecting to TB7 of the Heat source unit and receiving power from the Heat source unit.

Maximum 3 System controllers can be connected to TB7 and receiving power from the Heat source unit.
It is necessary to replace power supply switch connector CN41 with CN40 on one Heat source unit.

Fig. 2-3-3-B

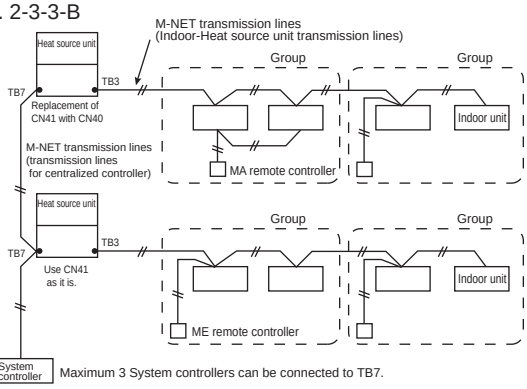

2-3-3-C. When connecting to TB7 of the Heat source unit but receiving power from PAC-SC51KUA.

When using PAC-SC51KUA to supply transmission power, the power supply connector CN41 on the Heat source units should be kept as it is. It is also a factory setting.
1 PAC-SC51KUA supports maximum 1 AG-150A unit due to the limited power 24VDC at its TB3.
However, 1 PAC-SC51KUA supplies transmission power at its TB2 equal to 6 Indoor units, which is referable at Table 2-3-2.
If PZ-52SF-E, Timers, System controller, ON/OFF controller connected to TB7 consume transmission power more than 5 (Indoor units), Transmission booster PAC-SF46EPA is needed. PAC-SF46EPA supplies transmission power equal to 25 Indoor units.

Fig. 2-3-3-C

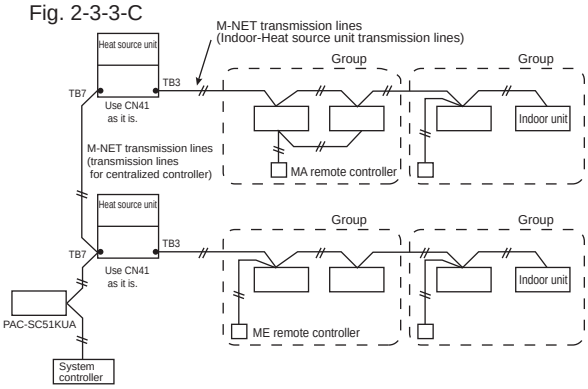

⚠ CAUTION

AG-150A*1 is recommended to connect to TB7 because it performs back-up to a number of data.
In an air conditioner system has more than 1 Heat source units, AG-150A receiving transmission power through TB7 on one of the Heat source units would have a risk that the connected Heat source unit failure would stop power supply to AG-150A, and disrupt the whole system.
When applying apportioned electric power function, AG-150A is necessary to connected to TB7 and has its own power supply unit PAC-SC51KUA.*2
*1: AG-150A is an example model of system controllers.
*2: Power supply unit PAC-SC51KUA is for AG-150A.

System WY

2-3-4. Power supply to LM adapter LMAP02-E

1-phase 220-240V AC power supply is needed.
The power supply unit PAC-SC51KUA is not necessary when connecting only the LMAP02-E. Yet, make sure to change the power supply changeover connector CN41 to CN40 on the LM adapter.

2-3-5. Power supply to expansion controller

1-phase 100-240VAC power supply is needed.
The power supply unit PAC-SC51KUA is not necessary.
The expansion controller supplies power through TB3, which equals 6 indoor units. (refer to Table 2-3-2)

2-3-6. Power supply to BM ADAPTER

1-phase 100-240VAC power supply is needed.
The power supply unit PAC-SC51KUA is not necessary when only BM ADAPTER is connected.
Yet, make sure to move the power jumper from CN41 to CN40 on the BM ADAPTER.

2-4. Address setting

2-4-1. Switch operation

In order to constitute CITY MULTI in a complete system, switch operation for setting the unit address No. and connection No. is required.

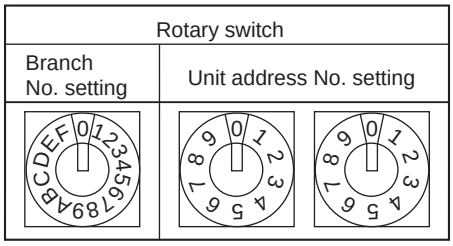

① Address No. of Heat source unit, indoor unit and remote controller.
The address No. is set at the address setting board.
In the case of WR2 system, it is necessary to set the same No. at the branch No. switch of indoor unit as that of the BC controller connected. (When connecting two or more branches, use the lowest branch No.)

② Caution for switch operations

- Be sure to shut off power source before switch setting. If operated with power source on, switch can not operate properly.
- No units with identical unit address shall exist in one whole air conditioner system. If set erroneously, the system can not operate.

③ MA remote controller

- When connecting only one remote controller to one group, it is always the main remote controller.
  When connecting two remote controllers to one group, set one remote controller as the main remote controller and the other as the sub remote controller.
- The factory setting is "Main".

PAR-21MAA
The MA remote controller does not have the switches listed above.
Refer to the installation manual for the function setting.

PAC-YT51CRB

Setting the dip switches

There are switches on the front of the remote controller. Remote controller Main/Sub and other function settings are performed using these switches. Ordinarily, only change the Main/Sub setting of SW1.
(The factory settings are all "ON".)

SW No	SW contents Main	ON	OFF	Comment
1	Remote controller Main/Sub setting	Main	Sub	Set one of the two remote controllers at one group to "Main"
2	Temperature display units setting	Celsius	Fahrenheit	When the temperature is displayed in [Fahrenheit], set to "No".
3	Cooling/heating display in AUTO mode	Yes	No	When you do not want to display "Cooling" and "Heating" in the Auto mode, set to "No".

2-4-2. Rule of setting address

Unit		Address setting	Example	Note
Indoor unit		01 ~ 50	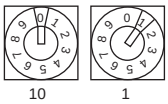	Use the most recent address within the same group of indoor units. Make the indoor units address connected to the BC controller (Sub) larger than the indoor units address connected to the BC controller (Main). If applicable, set the sub BC controllers in an PQRY system in the following order: (1) Indoor unit to be connected to the BC controller (Main) (2) Indoor unit to be connected to the BC controller (No.1 Sub) (3) Indoor unit to be connected to the BC controller (No.2 Sub) Set the address so that (1)<(2)<(3)
Heat source unit		51 ~ 99, 100	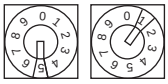	The smallest address of indoor unit in same refrigerant system + 50 ∗The address automatically becomes "100" if it is set as "01~ 50"
BC controller (Main)		52 ~ 99, 100	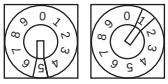	The address of Heat source unit + 1 ∗Please reset another address between 01 and 50 when two addresses overlap. ∗The address automatically becomes "100" if it is set as "01~ 50"
BC controller (Sub)		52 ~ 99, 100	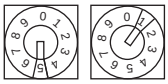	Lowest address within the indoor units connected to the BC controller (Sub) plus 50.
Local remote controller	ME, LOSSNAY Remote controller (Main)	101 ~ 150	1 Fixed 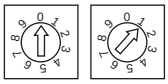	The smallest address of indoor unit in the group + 100 ∗The place of "100" is fixed to "1"
Local remote controller	ME, LOSSNAY Remote controller (Sub)	151 ~ 199, 200	1 Fixed 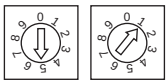	The address of main remote controller + 50 ∗The address automatically becomes "200" if it is set as "00"
System controller	Group remote controller	201 ~ 250	2 Fixed 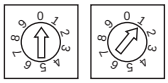	The smallest group No. to be managed + 200
System controller	System remote controller	000, 201 ~ 250	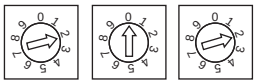	
System controller	ON/OFF remote controller	000, 201 ~ 250	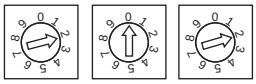	The smallest group No. to be managed + 200 ∗The smallest group No. to be managed is changeable.
System controller	AG-150A GB-50A	000, 201 ~ 250	0 0 0 100 10 1	
System controller	PAC-YG50ECA	000, 201 ~ 250	0 0 0 100 10 1	∗Settings are made on the initial screen of AG-150A.
System controller	BAC-HD150	000, 201 ~ 250	0 0 0 100 10 1	∗Settings are made with setting tool of BM ADAPTER.
System controller	LMAP02-E	201 ~ 250	2 Fixed 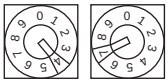	

∗Heat source unit here mentioned includes PQHY, PQRY.

System WY

2-4-3. System examples

Factory setting

Original switch setting of the heat source units, indoors, controllers, LMAP and BM ADAPTER at shipment is as follows.

- Heat source unit : Address: 00, CN41: U (Jumper), DipSW2-1: OFF
- Indoor unit : Address: 00
- ME remote controller : Address: 101
- LMAP : Address: 247, CN41: U (Jumper), DipSW1-2: OFF
- BM ADAPTER : Address: 00

Setting at the site

- DipSW2-1(Heat source) : When the System Controller is used, all the Dip SW2-1 at the heat source units should be set to "ON". * Dip SW2-1 remains OFF when only LMAP02-E is used.
- DipSW1-2(LMAP) : When the LMAP is used together with System Controller, DipSW1-2 at the LMAP should be set to "ON".
- CN40/CN41 : Change jumper from CN41 to CN 40 at heat source unit control board will activate central transmission power supply to TB7;
  (Change jumper at only one heat source unit when activating the transmission power supply without using a power supply unit.)
  Change jumper from CN41 to CN 40 at LMAP will activate transmission power supply to LMAP itself;
  Power supply unit is recommended to use for a system having more than 1 heat source unit, because the central transmission power supply from TB7 of one of heat source units is risking that the heat source unit failure may let down the whole system controller system.

System WY

2-4-3-1. MA remote controller, Single-refrigerant-system, No System Controller

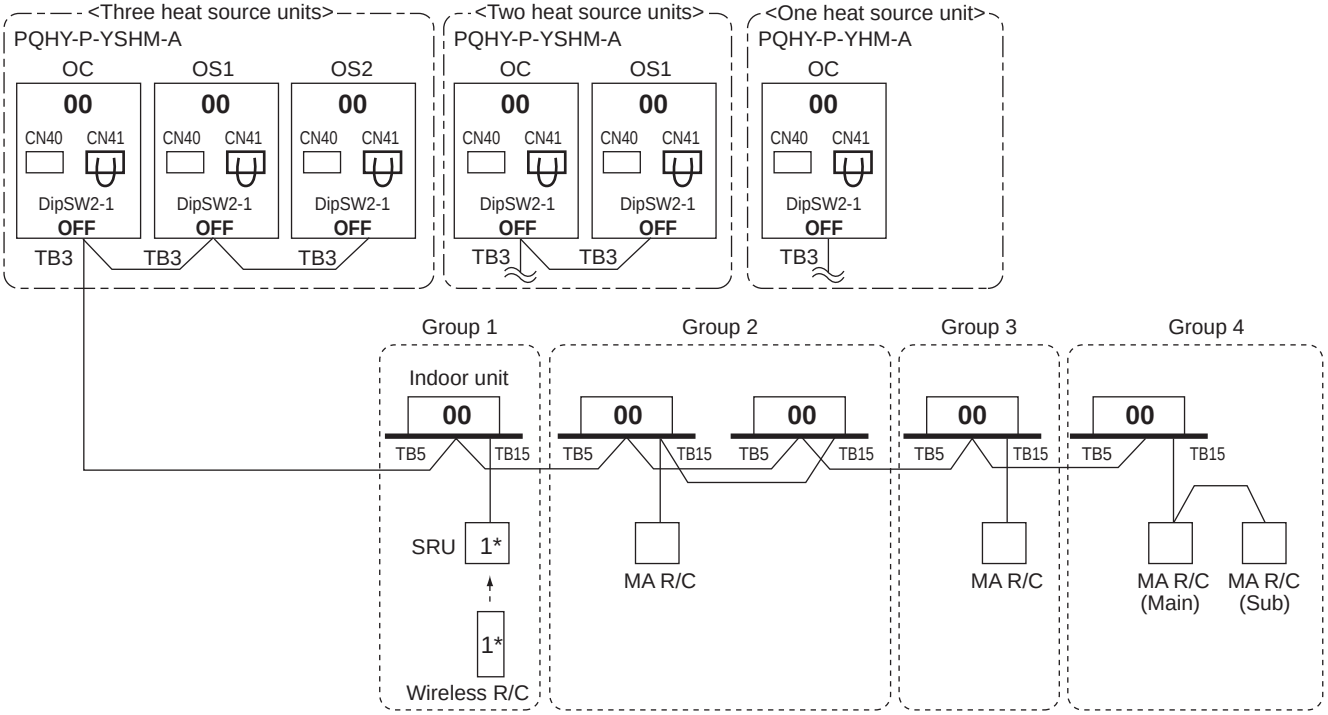

*1 For Wireless R/C and Signal receiver unit (SRU), channel 1, 2 and 3 are selectable and should be set to same channel.

NOTE:

1. Heat source units OC, OS1 and OS2 in one refrigerant circuit system are automatically detected.
   OC, OS1 and OS2 are ranked in descending order of capacity. If units are the same capacity, they are ranked in ascending order of their address.
2. No address setting is needed.
3. For a system having more than 32 indoor unit (P15-P140), confirm the need of Booster at **2-3 "System configuration restrictions".**

2-4-3. System examples

2-4-3-2. MA remote controller, Single-refrigerant-system, System Controller

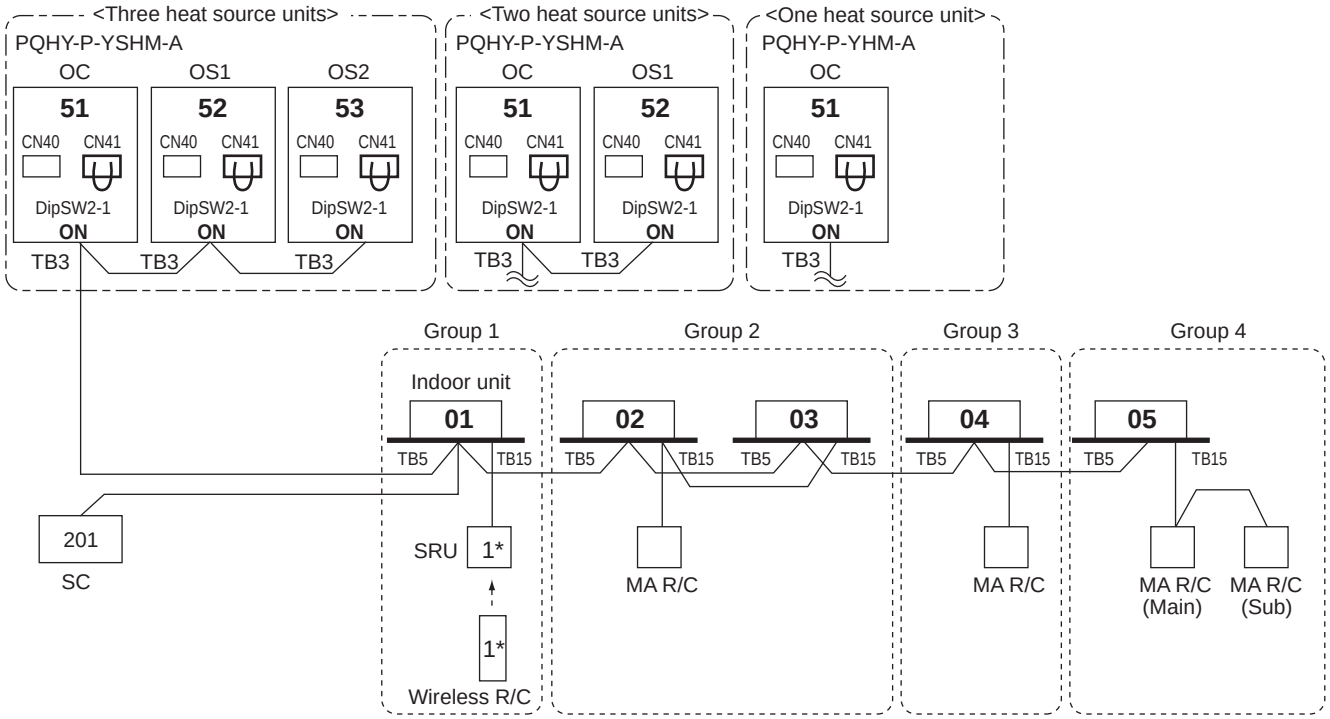

*1 For Wireless R/C and Signal receiver unit (SRU), channel 1, 2 and 3 are selectable and should be set to same channel.

*SC can be connected to TB3 side or TB7 side;
Should SC connected to TB7 side, change Jumper from CN41 to CN40 at the Heat source unit module so as to supply power to the SC.

NOTE:
1. Heat source units OC, OS1 and OS2 in one refrigerant circuit system are automatically detected.
   OC, OS1 and OS2 are ranked in descending order of capacity. If units are the same capacity, they are ranked in ascending order of their address.
2. Address should be set to Indoor units and centralized controller.
3. For a system having more than 32 indoor unit (P15-P140), confirm the need of Booster at **2-3 "System configuration restrictions".**

System WY

2-4-3. System examples

2-4-3-3. MA remote controller, Multi-refrigerant-system, System Controller at TB7/TB3 side, Booster for long M-NET wiring

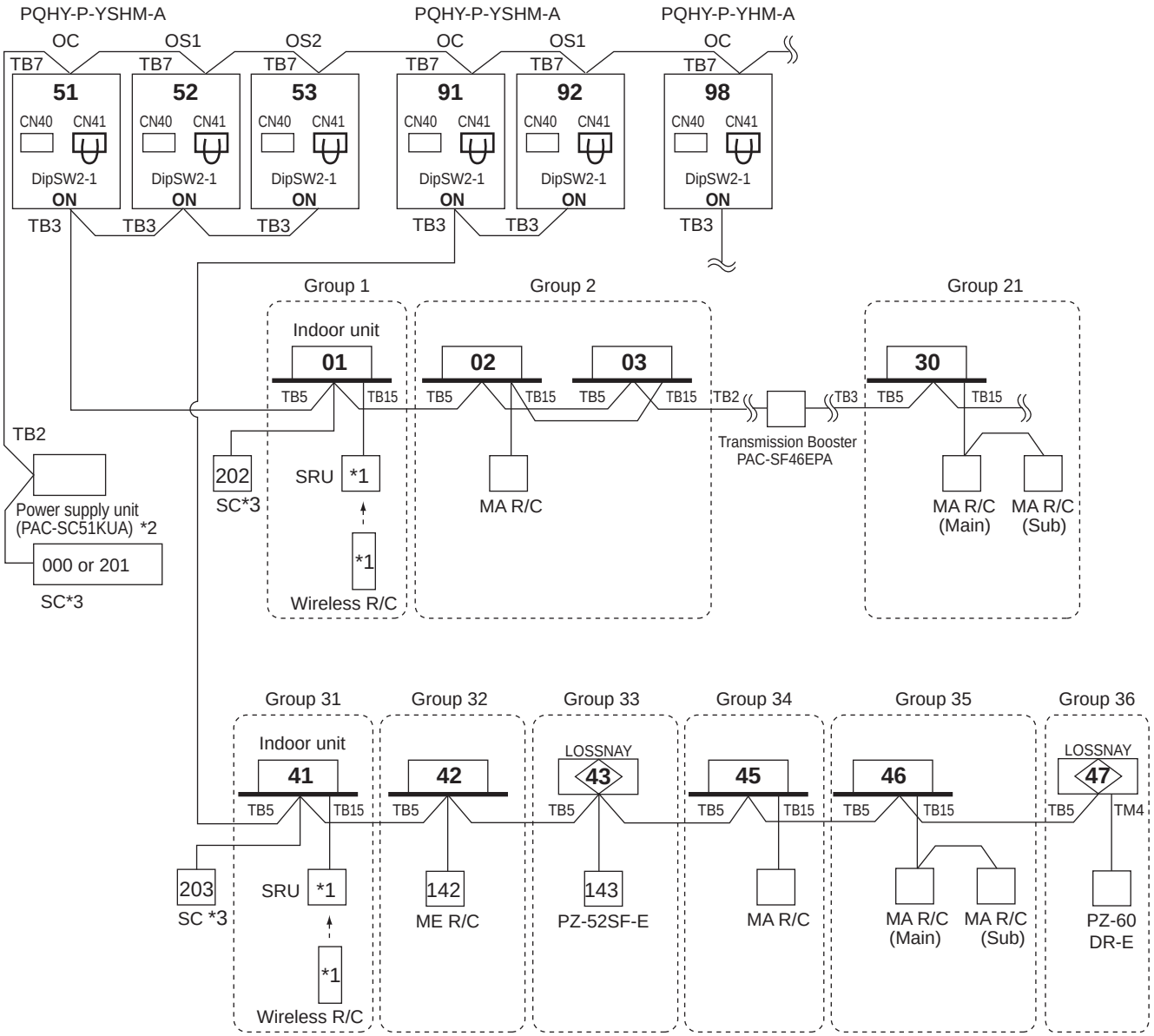

*1 For Wireless R/C and Signal receiver unit (SRU), channel 1, 2 and 3 are selectable and should be set to same channel.

*2 System controller should connect to TB7 at Heat source unit and use power supply unit together in Multi-Refrigerant-System. For AG-150A, 24V DC should be used with the PAC-SC51KUA.

*3 When multiple system controllers are connected in the system, set the controller with more functions than others as a "main" controller and others as "sub".
Make the setting to only one of the system controllers for "prohibition of operation from local remote controller".

NOTE:
1. Heat source units OC, OS1 and OS2 in one refrigerant circuit system are automatically detected. OC, OS1 and OS2 are ranked in descending order of capacity. If units are the same capacity, they are ranked in ascending order of their address.
2. Address should be set to Indoor units, LOSSNAY and system controller.
3. M-NET power is supplied by the Heat source unit at TB3, while Indoor unit and ME remote controller consume the M-NET power for transmission use. The power balance is needed to consider for long M-NET wiring. Details refer to **2-3 "System configuration restrictions".**

2-4-3. System examples

2-4-3-4. ME remote controller, Single-refrigerant-system, No system controller

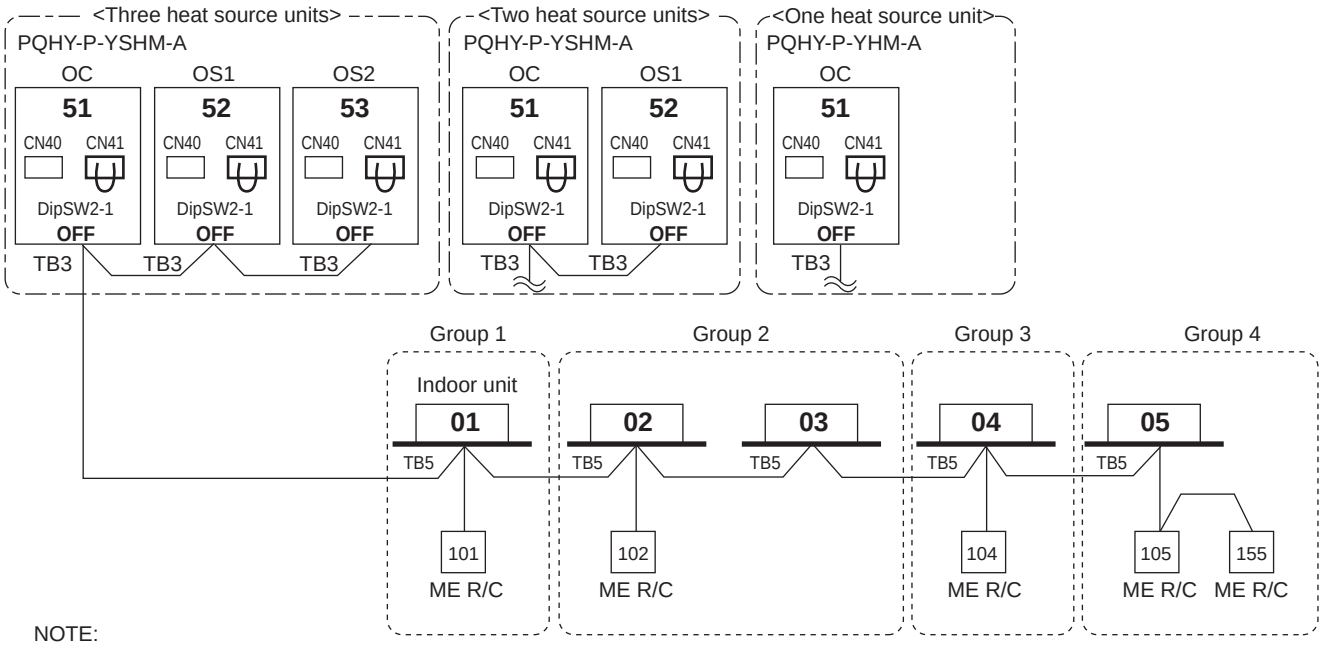

NOTE:

1. Heat source units OC, OS1 and OS2 in one refrigerant circuit system are automatically detected.
   OC, OS1 and OS2 are ranked in descending order of capacity. If units are the same capacity, they are ranked in ascending order of their address.
2. Address should be set to Indoor units, system controller and ME remote controllers.
3. M-NET power is supplied by the Heat source unit at TB3, while Indoor unit and ME RC consume the M-NET power for transmission use. The power balance is needed to consider for long M-NET wiring. Details refer to **2-3 "System configuration restrictions".**

2-4-3-5. ME remote controller, Single-refrigerant-system, System controller, LOSSNAY

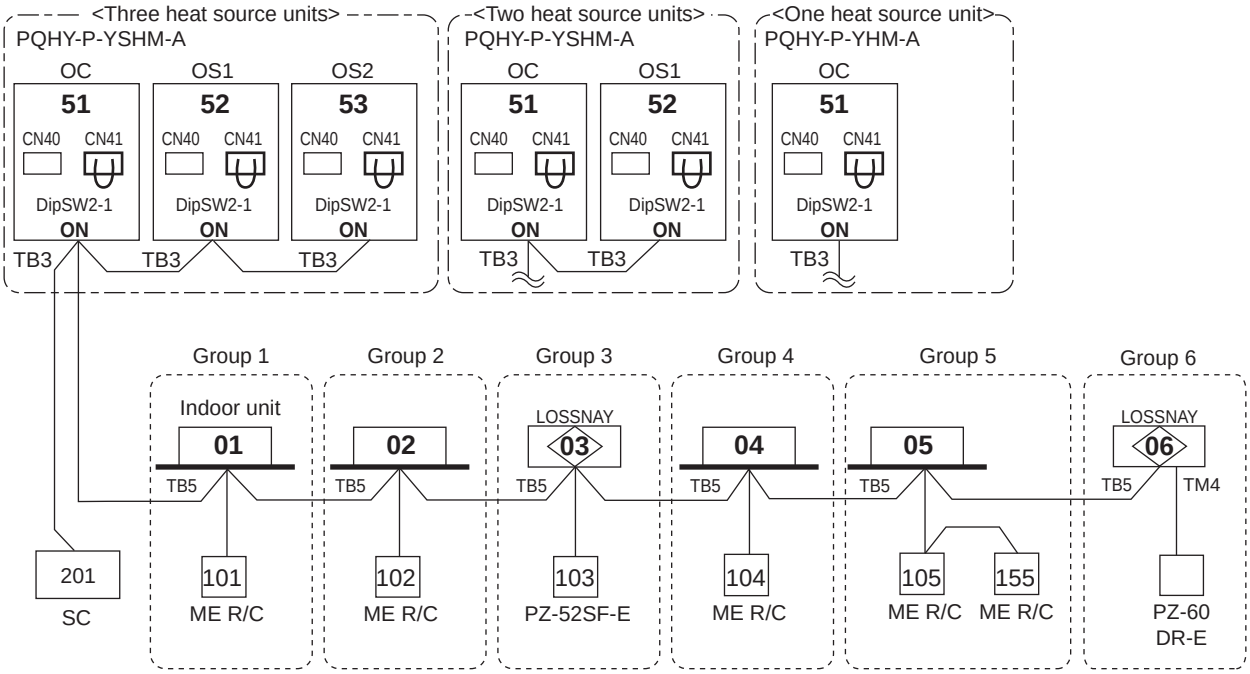

*SC can be connected to TB3 side or TB7 side;
Should SC connected to TB7 side, change Jumper from CN41 to CN40 at the Heat source unit module so as to supply power to the SC.

NOTE:

1. Heat source units OC, OS1 and OS2 in one refrigerant circuit system are automatically detected.
   OC, OS1 and OS2 are ranked in descending order of capacity. If units are the same capacity, they are ranked in ascending order of their address.
2. Address should be set to Indoor units, LOSSNAY centralized controller, ME remote controllers.
3. For a system having more than 32 indoor unit (P15-P140), confirm the need of Booster at **2-3 "System configuration restrictions".**

2-4-3. System examples

2-4-3-6. ME remote controller, Multi-refrigerant-system, System Controller at TB 7side, LOSSNAY, Booster for long M-NET wiring

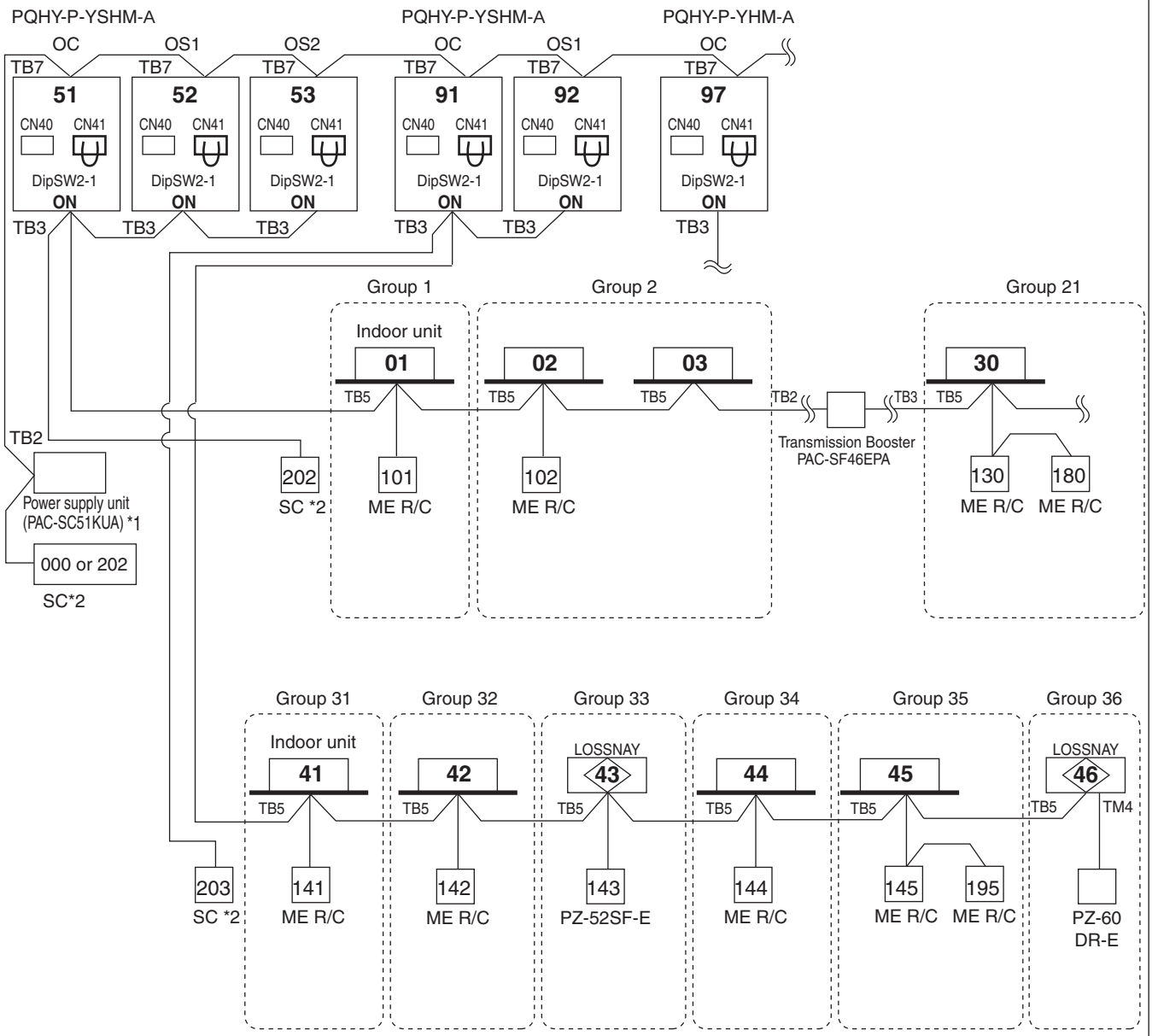

*1 System controller should connect to TB7 at Heat source unit and use power supply unit together in Multi-Refrigerant-System.
For AG-150A, 24V DC should be used with the PAC-SC51KUA.

*2 When multiple system controllers are connected in the system, set the controller with more functions than others as a "main" controller and others as "sub".
Make the setting to only one of the system controllers for "prohibition of operation from local remote controller".

NOTE:

1. Heat source units OC, OS1 and OS2 in one refrigerant circuit system are automatically detected.
OC, OS1 and OS2 are ranked in descending order of capacity. If units are the same capacity, they are ranked in ascending order of their address.

2. M-NET power is supplied by the Heat source unit at TB3, while Indoor unit and ME remote controller consume the M-NET power for transmission use. The power balance is needed to consider for long M-NET wiring.
Details refer to **2-3 "System configuration restrictions".**

System WY

2-4-3-7. ME remote controller, Multi-refrigerant-system, No Power supply unit

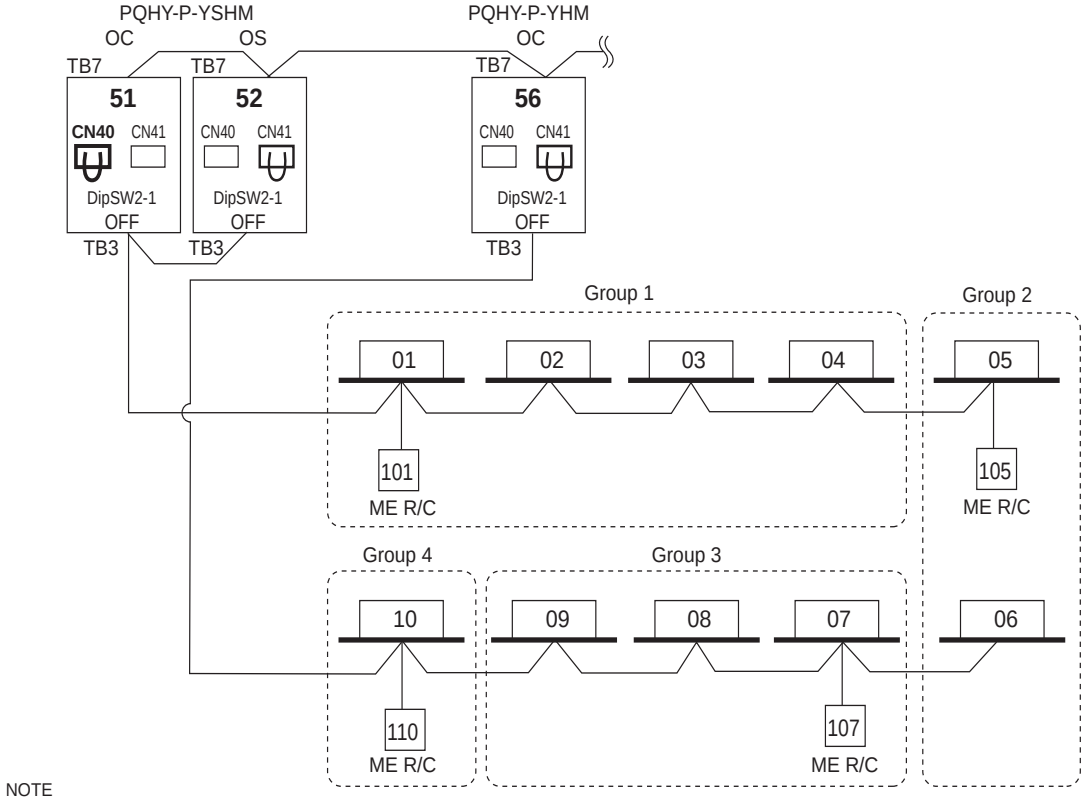

NOTE

- It is necessary to change the connecter to CN40 on the heat source unit control board (only one heat source unit) when the group is set between other refrigerant systems.
- It is necessary to set on the remote controller by manual when group sets on the different refrigerant system. Please refer to remote controller installation manual.

2-4-3-8. ME remote controller, Multi-refrigerant-system, System Controller at TB7 side, No Power sypply unit

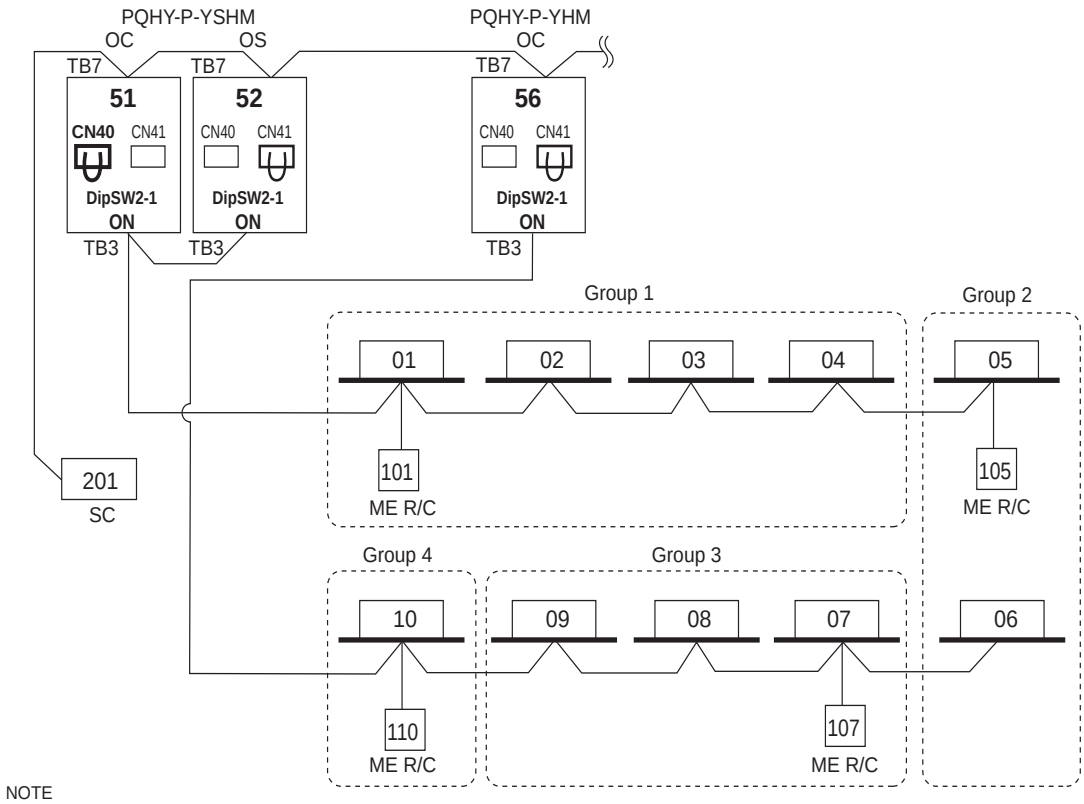

NOTE

- It is necessary to change the connecter to CN40 on the heat source unit control board (only one heat source unit) when the group is set between other refrigerant systems.
- It is necessary to set on the remote controller by manual when group sets on the different refrigerant system. Please refer to remote controller installation manual.

2-4-3-9. TG-2000A(*1)+AG-150A*2

AG-150A can control max. 50 indoor units;
TG-2000A can control max. 40 AG-150A;*3
TG-2000A can control max. 2000 indoor units.

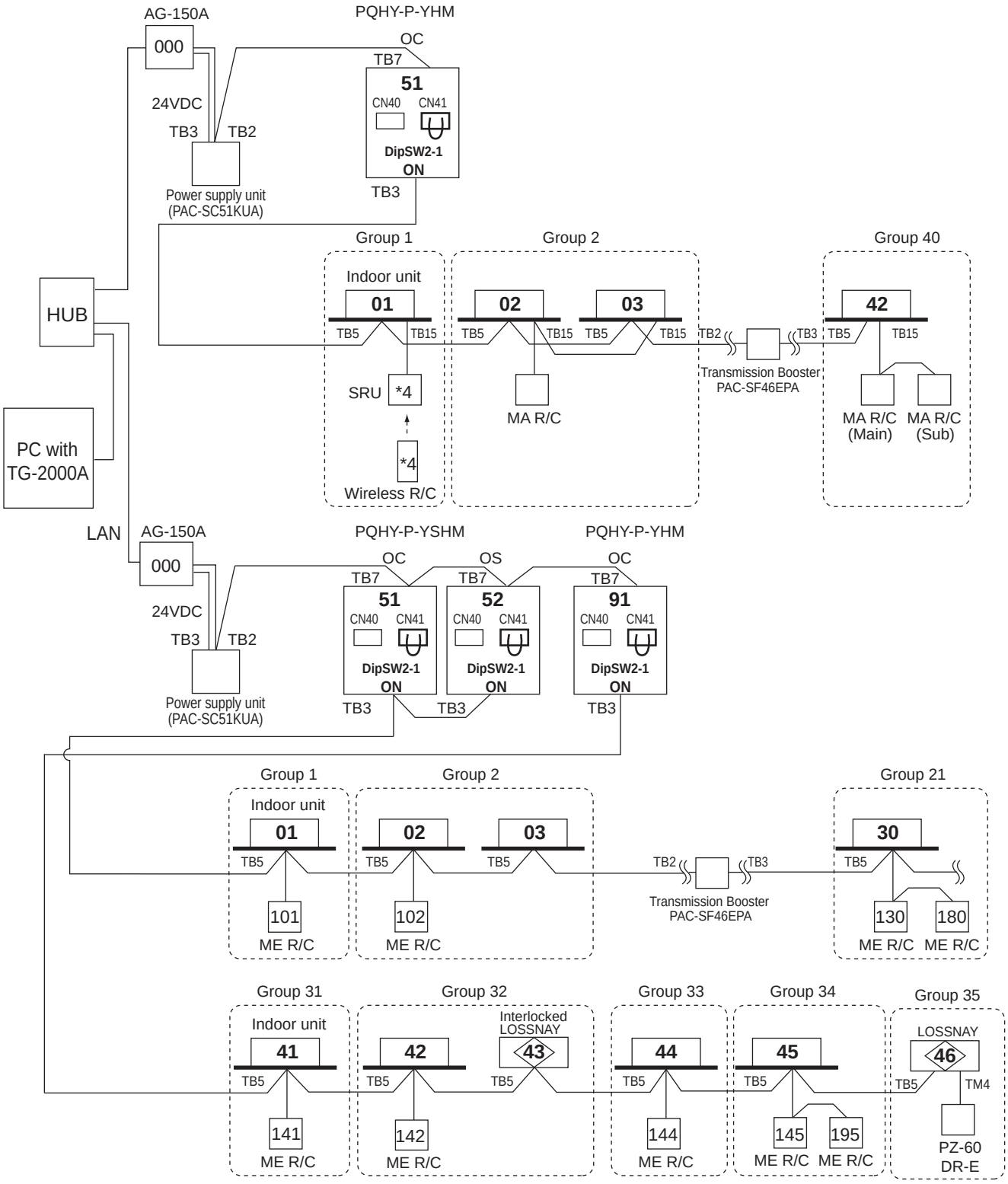

*1 TG-2000A (Ver.5.5 or later) supports AG-150A (Ver.1 series).
TG-2000A (Ver. 6.1 or later) supports AG-150A (Ver. 2.1 or later) connected with the expansion controller (EC).
*2 AG-150A (Ver.1 series) does not support the expansion controller (EC).
*3 When AG-150A connected with the expansion controller (EC) is connected, the number of EC will be the maximum controllable number.
TG-2000A can control up to 40 EC or AG-150A without EC connection.
*4 For Wireless R/C and Signal receiver unit (SRU), channel 1, 2 and 3 are selectable and should be set to same channel.

2-4-3. System examples

2-4-3-10. AG-150A + PAC-YG50ECA (Expansion controller)

AG-150A can control max. 150 indoor units/ via expansion controllers.

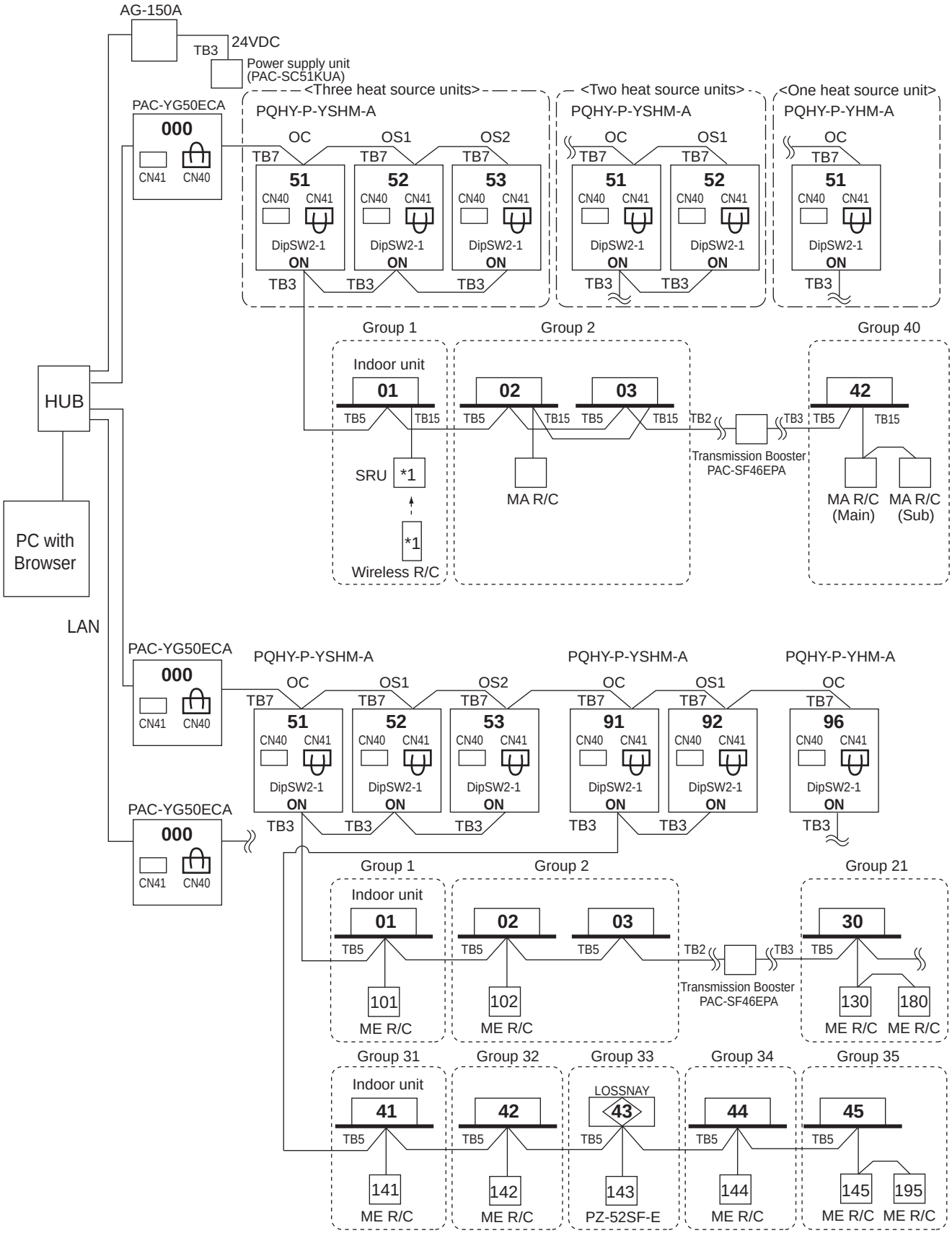

NOTE

- When connecting AG-150A to PAC-YG50ECA, TB2 for power supply unit does not need to be connected to AG-150A.

*1 For Wireless R/C and Signal receiver unit (SRU), channel 1, 2 and 3 are selectable and should be set to same channel.

2-4-3. System examples

2-4-3-11. LMAP

LMAP can transmission for max. 50 indoor units;
If system controller (SC) is used, DipSW1-2 at LMAP and DipSW2-1 at Heat source unit should set to "ON".
Change Jumper from CN41 to CN40 to activate power supply to LMAP itself for those LMAP connected without system controller (SC).

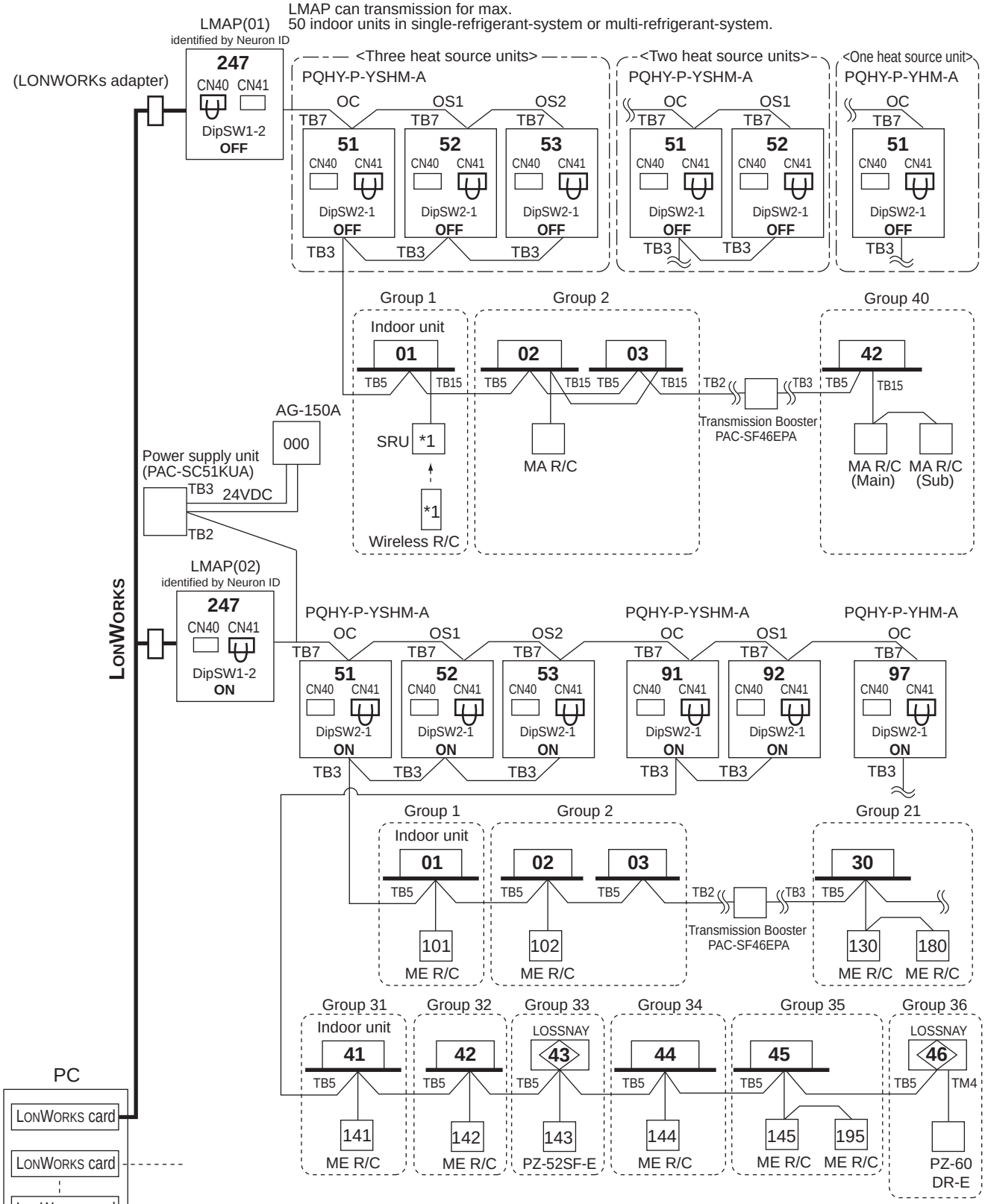

*1 For Wireless R/C and Signal receiver unit (SRU), channel 1, 2 and 3 are selectable and should be set to same channel.

System WY

2-4-3. System examples

2-4-3-12. BM ADAPTER

BM ADAPTER can transmission for max. 50 indoor units;
Change Jumper from CN41 to CN40 to activate power supply to BM ADAPTER itself for those BM ADAPTER connected without the power supply unit.

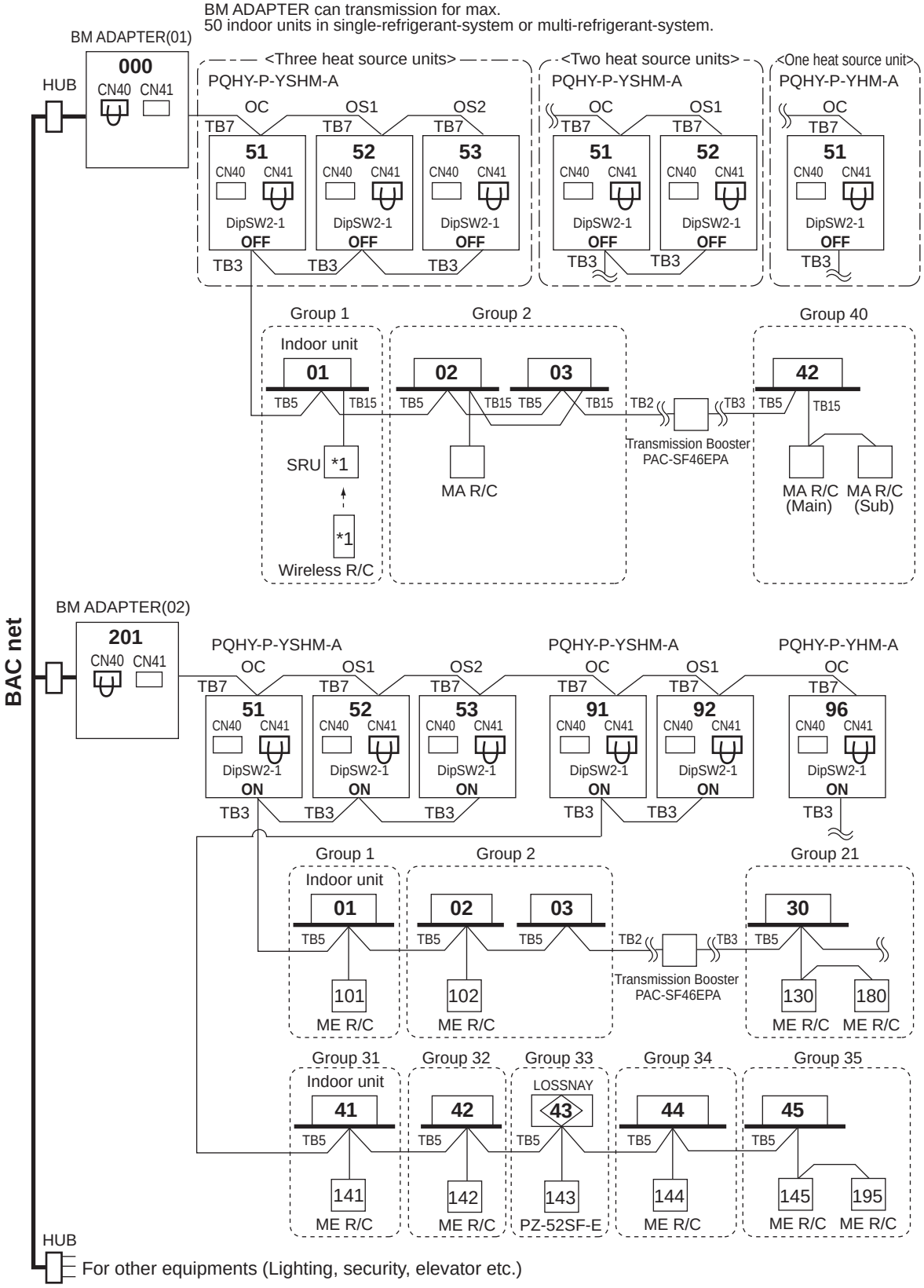

*1 For Wireless R/C and Signal receiver unit (SRU), channel 1, 2 and 3 are selectable and should be set to same channel.

2-4-3. System examples

2-4-3-13. BM ADAPTER+PAC-YG50ECA (Expansion controller)
BM ADAPTER(*1) can transmission for max. 150 indoor units/via expansion controllers (PAC-YG50ECA).

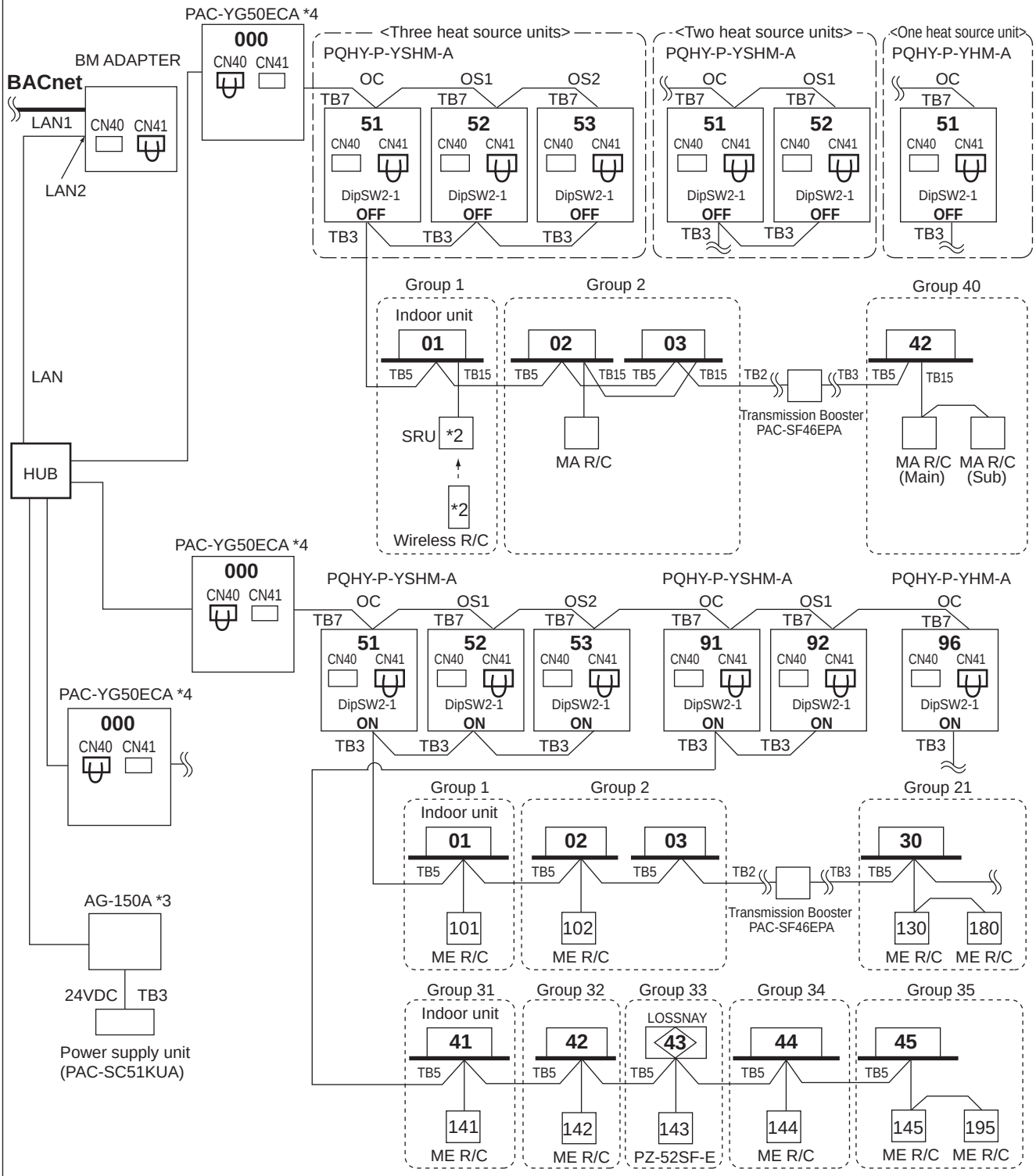

NOTE
•It is not necessary to connect the M-NET transmission line to the TB3 on BM ADAPTER. Leave the power jumper of BM ADAPTER connected to CN41.

*1 BM ADAPTER (Ver.2.00 or later) supports the expansion controller.
*2 For Wireless R/C and Signal receiver unit (SRU), channel 1, 2 and 3 are selectable and should be set to same channel.
*3 AG-150A (Ver.2.30 or later) supports the BM ADAPTER.
*4 PAC-YG50ECA (Ver.1.30 or later) supports the BM ADAPTER.

System WY

3. Piping Design

3-1. R410A Piping material

Refrigerant pipe for CITY MULTI shall be made of phosphorus deoxidized copper, and has two types.
A. Type-O : Soft copper pipe (annealed copper pipe), can be easily bent with human's hand.
B. Type-1/2H pipe : Hard copper pipe (Straight pipe), being stronger than Type-O pipe of the same radical thickness.

The maximum operation pressure of R410A air conditioner is 4.30 MPa [623psi]. The refrigerant piping should ensure the safety under the maximum operation pressure. MITSUBISHI ELECTRIC recommends pipe size as Table 3-1, or You shall follow the local industrial standard. Pipes of radical thickness 0.7mm or less shall not be used.

Table 3-1. Copper pipe size and radial thickness for R410A CITY MULTI.

Size (mm)	Size (inch)	Radial thickness (mm)	Radial thickness (mil)	Pipe type
ø6.35	ø1/4"	0.8	[32]	Type-O
ø9.52	ø3/8"	0.8	[32]	Type-O
ø12.7	ø1/2"	0.8	[32]	Type-O
ø15.88	ø5/8"	1.0	[40]	Type-O
ø19.05	ø3/4"	1.2	[48]	Type-O
ø19.05	ø3/4"	1.0	[40]	Type-1/2H or H
ø22.2	ø7/8"	1.0	[40]	Type-1/2H or H
ø25.4	ø1"	1.0	[40]	Type-1/2H or H
ø28.58	ø1-1/8"	1.0	[40]	Type-1/2H or H
ø31.75	ø1-1/4"	1.1	[44]	Type-1/2H or H
ø34.93	ø1-3/8"	1.2	[48]	Type-1/2H or H
ø41.28	ø1-5/8"	1.4	[56]	Type-1/2H or H

* For pipe sized ø19.05 (3/4") for R410A air conditioner, choice of pipe type is up to you.
* The figures in the radial thickness column are based on the Japanese standards and provided only as a reference. Use pipes that meet the local standards.

Flare

Due to the relative higher operation pressure of R410A compared to R22, the flare connection should follow dimensions mentioned below so as to achieve enough the air-tightness.

Flare pipe	Pipe size	A (For R410A) (mm[in.])
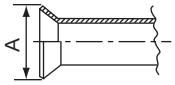	ø6.35 [1/4"]	9.1
	ø9.52 [3/8"]	13.2
	ø12.70 [1/2"]	16.6
	ø15.88 [5/8"]	19.7
	ø19.05 [3/4"]	24.0

Flare nut	Pipe size	B (For R410A) (mm[in.])
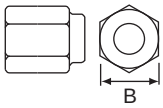	ø6.35 [1/4"]	17.0
	ø9.52 [3/8"]	22.0
	ø12.70 [1/2"]	26.0
	ø15.88 [5/8"]	29.0
	ø19.05 [3/4"]	36.0

3-2. Piping Design

3-2-1. PQHY-P200-300YHM Piping

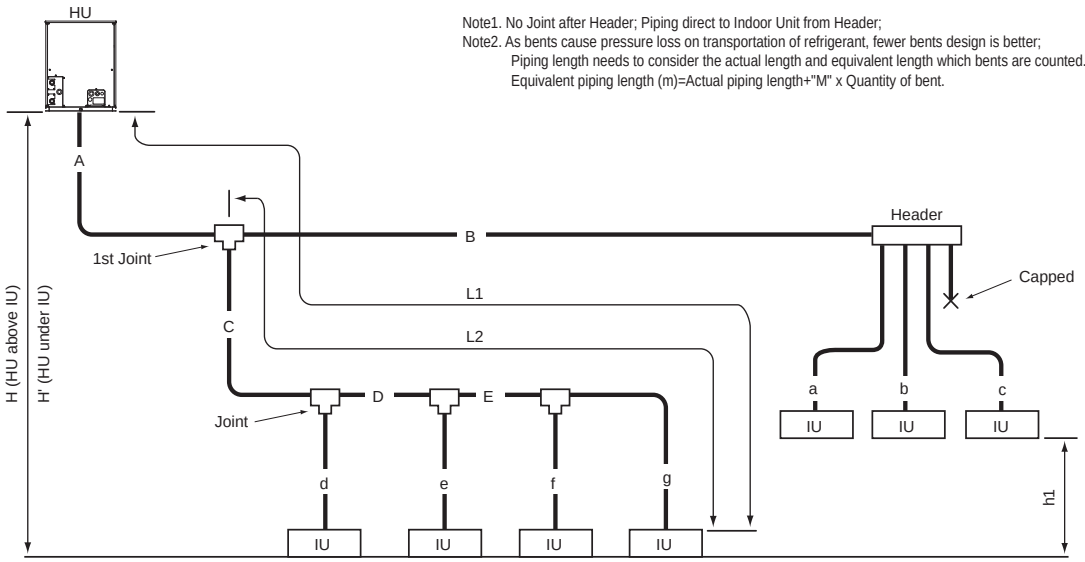

Note1. No Joint after Header; Piping direct to Indoor Unit from Header;
Note2. As bents cause pressure loss on transportation of refrigerant, fewer bents design is better;
Piping length needs to consider the actual length and equivalent length which bents are counted.
Equivalent piping length (m)=Actual piping length+"M" x Quantity of bent.

Fig. 3-2-1A Piping scheme

IU : Indoor unit , HU : Heat source unit

Table3-2-1-1. Piping length (m [ft.])

Item	Piping in the figure	Max. length	Max. equivalent length
Total piping length	A+B+C+D+E+a+b+c+d+e+f+g	300 [984']	-
Farthest IU from HU (L1)	A+C+D+E+g / A+B+c	165 [541']	190 [623']
Farthest IU from first Joint (L2)	C+D+E+g / B+c	40 [131']	40 [131']
Height between HU and IU (HU above IU)	H	50 [164']	-
Height between HU and IU (HU under IU)	H'	40 [131']	-
Height between IU and IU	h1	15 [49']	-

HU: Heat source Unit, IU: Indoor Unit

Table3-2-1-2. Bent equivalent length "M"

Heat source Model	M (m/bent [ft./bent])
PQHY-P200YHM-A	0.35 [1.15]
PQHY-P250YHM-A	0.42 [1.38]
PQHY-P300YHM-A	0.42 [1.38]

Table3-2-1-3. Piping "A" size selection rule (mm [in.])

Heat source and the first Joint	Pipe(Liquid)	Pipe(Gas)
PQHY-P200YHM=CMY-Y102L-G2,Y102S-G2	ø9.52 [3/8"]	ø19.05 [3/4"]
PQHY-P250YHM=CMY-Y102L-G2	ø9.52 [3/8"] *1	ø22.20 [7/8"]
PQHY-P300YHM=CMY-Y102-G2	ø9.52 [3/8"] *2	ø22.20 [7/8"]

*1. A>=90m [295ft.], ø12.70mm [1/2in.] ; A<90m [295ft.], ø9.52mm [3/8in.]
*2. A>=40m [131ft.], ø12.70mm [1/2in.]

Table3-2-1-6. R410A Joint selection rule

Total down-stream Indoor capacity	Joint
~ P200	CMY-Y102S-G2
P201 ~ P400	CMY-Y102L-G2
P401 ~ P650	CMY-Y202-G2
P651 ~	CMY-Y302-G2

*Concerning detailed usage of Joint parts, refer to its Installation Manual.

Table3-2-1-4. R410A piping"B","C","D","E"size selection rule (mm [in.])

Total down-stream Indoor capacity	Pipe(Liquid)	Pipe(Gas)
~ P140	ø9.52 [3/8"]	ø15.88 [5/8"]
P141 ~ P200	ø9.52 [3/8"]	ø19.05 [3/4"]
P201 ~ P300	ø9.52 [3/8"]	ø22.20 [7/8"]
P301 ~ P400	ø12.70 [1/2"]	ø28.58 [1-1/8"]
P401 ~ P650	ø15.88 [5/8"]	ø28.58 [1-1/8"]
P651 ~	ø19.05 [3/4"]	ø34.93 [1-3/8"]

Table3-2-1-7. R410A Header selection rule

	4-branch Header	8-branch Header	10-branch Header
	CMY-Y104-G	CMY-Y108-G	CMY-Y1010-G
Total down-stream Indoor capacity	<=P200	<=P400	<=P650

* CMY-Y104-G can directly connect PQHY-P200YHM, but can NOT directly connect PQHY-P250YHM or above;
* CMY-Y108-G can directly connect PQHY-P200-450Y(S)HM, but can NOT directly connect PQHY-P500YSHM or above;
* CMY-Y1010-G can directly connect PQHY-P200-600Y(S)HM;
* CMY-Y104-G can NOT connect P200,P250 Indoor, but CMY-Y108, Y1010-G can do;
* Concerning detailed usage of Header parts, refer to its Installation Manual.

Table3-2-1-5. Piping "a","b","c","d","e","f","g" size selection rule (mm [in.])

Indoor Unit size	Pipe(Liquid)	Pipe(Gas)
P20,P25,P32,P40,P50,GUF-50RD(H)	ø6.35 [1/4"]	ø12.70 [1/2"]
P63,P71,P80,P100,P125,P140,GUF-100RD(H)	ø9.52 [3/8"]	ø15.88 [5/8"]
P200	ø9.52 [3/8"]	ø19.05 [3/4"]
P250	ø9.52 [3/8"]	ø22.20 [7/8"]

Note3. Indoor capacity is described as its model size;
For example, PEFY-P32VMM-E, its capacity is P32;
Note4. Total down-stream Indoor capacity is the summary of the model size of Indoors downstream.
For example, PEFY-P25VMM-E+PEFY-P32VMM-E: Total Indoor capacity=P25+P32=P57
Note5. Piping sized determined by the Total down-stream indoor capacity is NOT necessary to be bigger than the up-stream one.
i.e. A>=B; A>=C>=D

System WY

3-2-2. PQHY-P400-600YSHM Piping

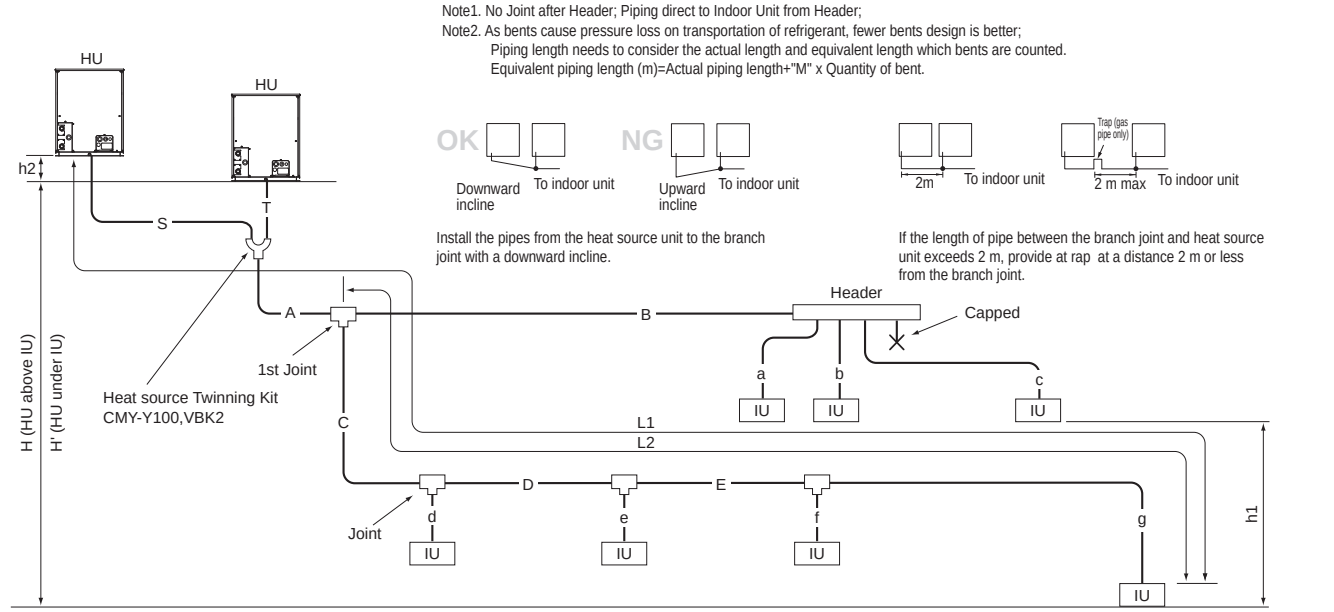

Fig. 3-2-1B Piping scheme

IU : Indoor unit , HU : Heat source unit

Table3-2-2-1. Piping length (m [ft.])

Item	Piping in the figure	Max. length	Max. equivalent length
Total piping length	S+T+A+B+C+D+E+a+b+c+d+e+f+g	500 [1640']	-
Distance between HU and HU	S+T	10[32']	-
Height between HU and HU	h2	0.1[0.3']	-
Farthest IU from HU (L1)	S(T)+A+C+D+E+g / S(T)+A+B+c	165 [541']	190 [623']
Farthest IU from the first Joint (L2)	C+D+E+g / B+c	40 [131']	40 [131']
Height between HU and IU (HU above IU)	H	50 [164']	-
Height between HU and IU (HU above IU)	H'	40 [131']	-
Height between IU and IU	h1	15 [49']	-

HU: Heat source Unit, IU: Indoor Unit

Table3-2-2-2. Bent equivalent length "M"

Heat source Model	M (m/bent [ft./bent])
PQHY-P400YSHM-A	0.50 [1.64]
PQHY-P450YSHM-A	0.50 [1.64]
PQHY-P500YSHM-A	0.50 [1.64]
PQHY-P550YSHM-A	0.50 [1.64]
PQHY-P600YSHM-A	0.50 [1.64]

Table3-2-2-3. Piping "A" size selection rule (mm [in.])

Heat source and the first Joint	Pipe(Liquid)	Pipe(Gas)
CMY-Y100VBK2=CMY-Y202-G2	ø12.70[1/2"]	ø28.58[1-1/8"]*1
	ø15.88[5/8"]	ø28.58[1-1/8"]*2

For Piping size "S","T", please refer to specification of the Twining kit CMY-Y100VBK2 at the Heat source unit's external drawing.

Table3-2-2-4. Piping"B","C","D","E" size selection rule (mm [in.])

Total down-stream Indoor capacity	Pipe(Liquid)	Pipe(Gas)
~ P140	ø9.52 [3/8"]	ø15.88 [5/8"]
P141 ~ P200	ø9.52 [3/8"]	ø19.05 [3/4"]
P201 ~ P300	ø9.52 [3/8"]	ø22.20 [7/8"]
P301 ~ P400	ø12.70 [1/2"]	ø28.58 [1-1/8"]
P401 ~ P650	ø15.88 [5/8"]	ø28.58 [1-1/8"]
P651 ~	ø19.05 [3/4"]	ø34.93 [1-3/8"]

Table3-2-2-5. Piping"a","b","c","d","e","f","g" size selection rule (mm [in.])

Indoor Unit size	Pipe(Liquid)	Pipe(Gas)
P20,P25,P32,P40,P50,GUF-50RD(H)	ø6.35 [1/4"]	ø12.70 [1/2"]
P63,P71,P80,P100,P125,P140,GUF-100RD(H)	ø9.52 [3/8"]	ø15.88 [5/8"]
P200	ø9.52 [3/8"]	ø19.05 [3/4"]
P250	ø9.52 [3/8"]	ø22.20 [7/8"]

Table3-2-2-6. R410A Joint selection rule

Total down-stream Indoor capacity	Joint
~ P200	CMY-Y102S-G2
P201 ~ P400	CMY-Y102L-G2
P401 ~ P650	CMY-Y202-G2
P651 ~	CMY-Y302-G2

*PQHY-P400-600YSHM's first Joint is always CMY-Y202-G2;
*Concerning detailed usage of Joint parts, refer to its Installation Manual.
*The total capacity of the units in the downstream of the branch joint on at least one of the piping lines that are connected to the branch joint should be 650 or below.
If the total capacity of the units in the downstream of the branch joints on both lines is 650 or above use two branch joints (CMY-Y302-G2).

Table3-2-2-7. R410A Header selection rule

	4-branch Header	8-branch Header	10-branch Header
	CMY-Y104-G	CMY-Y108-G	CMY-Y1010-G
Total down-stream Indoor capacity	<=P200	<=P400	<=P650

* CMY-Y104-G can directly connect PQHY-P200YHM, but can NOT directly connect PQHY-P250YHM or above;
* CMY-Y108-G can directly connect PQHY-P200-600Y(S)HM, but can NOT directly connect PQHY-P500YSHM or above;
* CMY-Y1010-G can directly connect PUHY-(E)P200-650Y(S)HM;
* CMY-Y104-G can NOT connect P200,P250 Indoor, but CMY-Y108, Y1010-G can do;
* Concerning detailed usage of Header parts, refer to its Installation Manual.

Note3. Indoor capacity is described as its model size;
For example, PEFY-P32VMM-E, its capacity is P32;
Note4. Total down-stream Indoor capacity is the summary of the model size of Indoors downstream.
For example, PEFY-P25VMM-E+PEFY-P32VMM-E: Total Indoor capacity=P25+P32=P57
Note5. Piping sized determined by the Total down-stream indoor capacity is NOT necessary to be bigger than the up-stream one.
i.e. A>=B; A>=C>=D

3-2-3. PQHY-P650-900YSHM

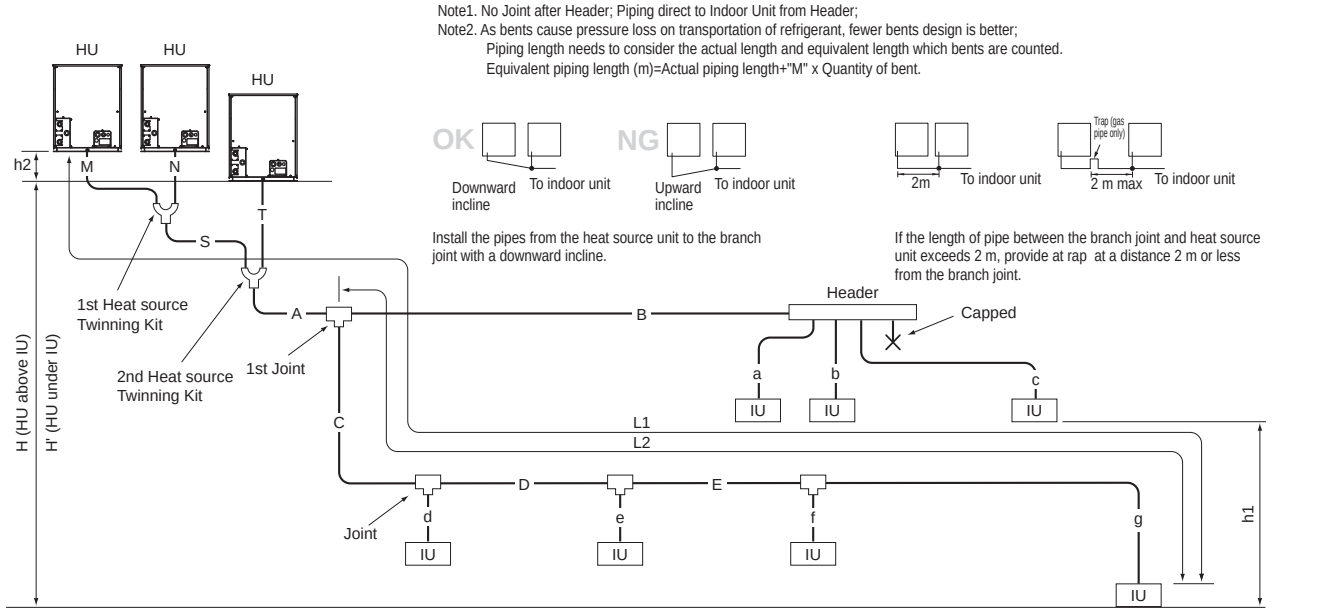

Fig. 3-2-1C Piping scheme

IU : Indoor unit , HU : Heat source unit

Table3-2-3-1. Piping length (m [ft.])

Item	Piping in the figure	Max. length	Max. equivalent length
Total piping length	S+T+M+N+A+B+C+D+E+a+b+c+d+e+f+g	500[1640']	-
Distance between HU and HU	M+N+S+T	10[32']	-
Height between HU and HU	h2	0.1[0.3']	-
Farthest IU from HU (L1)	M(N)+S+A+C+D+E+g / M(N)+S+A+B+c	165[541']	190[623']
Farthest IU from the first Joint (L2)	C+D+E+g / B+c	40[131']	40[131']
Height between HU and IU (HU above IU)	H	50[164'] *1	-
Height between HU and IU (HU above IU)	H'	40[131'] *2	-
Height between IU and IU	h1	15[49']	-

HU: Heat source Unit, IU: Indoor Unit

*1 90m is available depending on the model and installation conditions. For more detailed information, contact your local distributor.

*2 60m is available depending on the model and installation conditions. For more detailed information, contact your local distributor.

Table3-2-3-2. Bent equivalent length "M"

Heat source Model	M (m/bent [ft./bent])
PQHY-P650YSHM-A	0.50 [1.64]
PQHY-P700YSHM-A	0.70 [2.29]
PQHY-P750YSHM-A	0.70 [2.29]
PQHY-P800YSHM-A	0.70 [2.29]
PQHY-P850YSHM-A	0.80 [2.62]
PQHY-P900YSHM-A	0.80 [2.62]

Table3-2-3-3. Piping "A" size selection rule (mm [in.])

Heat source and the first Joint	Pipe(Liquid)	Pipe(Gas)
CMY-Y300VBK2=CMY-Y302-G2	ø19.05[3/4"]	ø34.93[1-3/8"]*1
	ø19.05[3/4"]	ø41.28[1-5/8"]*2

For Piping size"M","N","S","T", please refer to specification of the Twining kit CMY-Y300VBK2 at the Heat source unit's external drawing.

*1 PQHY-P650-800YSHM
*2 PQHY-P850, 900YSHM

Table3-2-3-6. R410A Joint selection rule

Total down-stream Indoor capacity	Joint
~ P200	CMY-Y102S-G2
P201 ~ P400	CMY-Y102L-G2
P401 ~ P650	CMY-Y202-G2
P651 ~	CMY-Y302-G2

*The total capacity of the units in the downstream of the branch joint on at least one of the piping lines that are connected to the branch joint should be 650 or below.
If the total capacity of the units in the downstream of the branch joints on both lines is 650 or above use two branch joints (CMY-Y302-G2).
*Concerning detailed usage of Joint parts, refer to its Installation Manual.

Table3-2-3-4. Piping"B","C","D","E" size selection rule (mm [in.])

Total down-stream Indoor capacity	Pipe(Liquid)	Pipe(Gas)
~ P140	ø9.52 [3/8"]	ø15.88 [5/8"]
P141 ~ P200	ø9.52 [3/8"]	ø19.05 [3/4"]
P201 ~ P300	ø9.52 [3/8"]	ø22.20 [7/8"]
P301 ~ P400	ø12.70 [1/2"]	ø28.58 [1-1/8"]
P401 ~ P650	ø15.88 [5/8"]	ø28.58 [1-1/8"]
P651 ~ P800	ø19.05 [3/4"]	ø34.93 [1-3/8"]
P801 ~	ø19.05 [3/4"]	ø41.28 [1-5/8"]

Table3-2-3-5. Piping"a","b","c","d","e","f","g" size selection rule (mm [in.])

Indoor Unit size	Pipe(Liquid)	Pipe(Gas)
P20,P25,P32,P40,P50,GUF-50RD(H)	ø6.35 [1/4"]	ø12.70 [1/2"]
P63,P71,P80,P100,P125,P140,GUF-100RD(H)	ø9.52 [3/8"]	ø15.88 [5/8"]
P200	ø9.52 [3/8"]	ø19.05 [3/4"]
P250	ø9.52 [3/8"]	ø22.20 [7/8"]

Table3-2-3-7. R410A Header selection rule

	4-branch Header	8-branch Header	10-branch Header
	CMY-Y104-G	CMY-Y108-G	CMY-Y1010-G
Total down-stream Indoor capacity	<=P200	<=P400	<=P650

* CMY-Y104-G can directly connect PQHY-P200YHM, but can NOT directly connect PQHY-P250YHM or above;
* CMY-Y108-G can directly connect PQHY-P200-450Y(S)HM, but can NOT directly connect PQHY-P500YSHM or above;
* CMY-Y1010-G can directly connect PQHY-P200-650Y(S)HM;
* CMY-Y104-G can NOT connect P200,P250 Indoor, but CMY-Y108, Y1010-G can do;
* Concerning detailed usage of Header parts, refer to its Installation Manual.

Note3. Indoor capacity is described as its model size;
For example, PEFY-P32VMA-E, its capacity is P32;
Note4. Total down-stream Indoor capacity is the summary of the model size of Indoors downstream.
For example, PEFY-P25VMA-E+PEFY-P32VMA-E: Total Indoor capacity=P25+P32=P57
Note5. Piping sized determined by the Total down-stream indoor capacity is NOT necessary to be bigger than the up-stream one.
i.e. A>=B; A>=C>=D

System WY

3-2-4. Refrigerant charging calculation

Sample connection(with 8 indoor units)

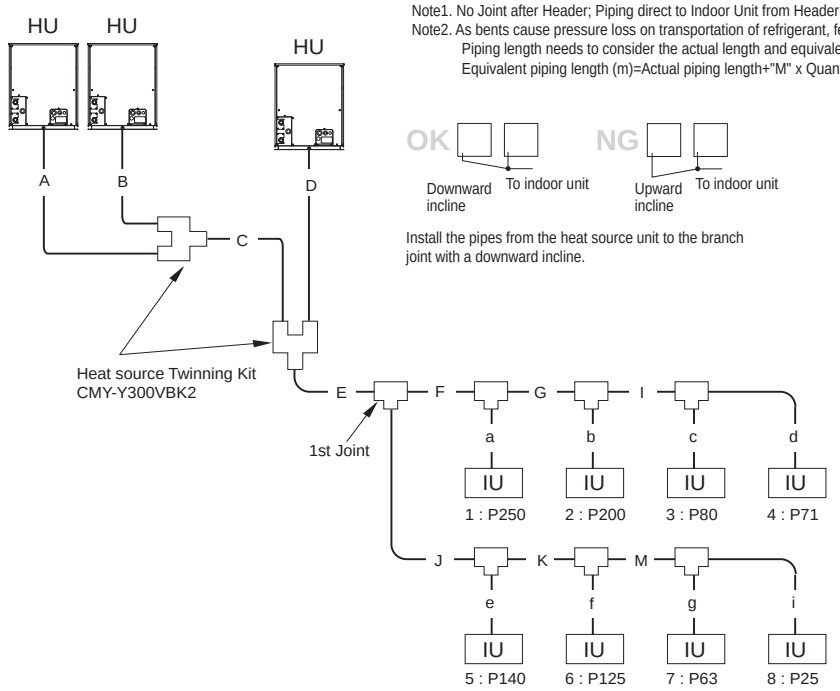

Note1. No Joint after Header; Piping direct to Indoor Unit from Header;
Note2. As bents cause pressure loss on transportation of refrigerant, fewer bents design is better;
Piping length needs to consider the actual length and equivalent length which bents are counted.
Equivalent piping length (m)=Actual piping length+"M" x Quantity of bent.

Install the pipes from the heat source unit to the branch joint with a downward incline.

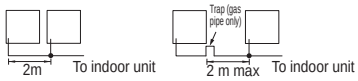

If the length of pipe between the branch joint and heat source unit exceeds 2 m, provide at rap at a distance 2 m or less from the branch joint.

■ Amount of refrigerant to be charged

Refrigerant for extended pipes (field piping) is not factory-charged to the heat source unit. Add an appropriate amount of refrigerant for each pipe on site.

Record the size of each liquid pipe and the amount of refrigerant that was charged on the heat source unit for future reference.

■ Calculating the amount of refrigerant to be charged

- The amount of refrigerant to be charged is calculated with the size of the on-site-installed liquid pipes and their length.
- Calculate the amount of refrigerant to be charged according to the formula below.
- Round up the calculation result to the nearest 0.1kg. (i.e., 16.08 kg = 16.1 kg)

<Amount of refrigerant to be charged>

■ Calculating the amount of refrigerant to be charged

Total length of ø19.05 liquid pipe x 0.29	+	Total length of ø15.88 liquid pipe x 0.2	+	Total length of ø12.7 liquid pipe x 0.12	+	Total length of ø9.52 liquid pipe x 0.06	+	Total length of ø6.35 liquid pipe x 0.024	+
(m)x0.29(kg/m)		(m)x0.2(kg/m)		(m)x0.12(kg/m)		(m)x0.06(kg/m)		(m)x0.024(kg/m)	

■ Amount of factory-charged refrigerant

Heat source unit model	Charged amount
P200 model	5.0kg
P250 model	
P300 model	

Total capacity of connected indoor units	Charged amount
~80	2.0kg
81~160	2.5kg
161~330	3.0kg
331~390	3.5kg
391~480	4.5kg
481~630	5.0kg
631~710	6.0kg
711~800	8.0kg
801~890	9.0kg
891~1070	10.0kg
1071~1250	12.0kg
1251~	14.0kg

■ Sample calculation

			Indoor		
A : ø9.52	3m		1:P250	a : ø9.52	15m
B : ø12.70	2m		2:P200	b : ø9.52	15m
C : ø19.05	2m		3:P80	c : ø9.52	5m
D : ø15.88	1m		4:P71	d : ø9.52	5m
E : ø19.05	40m		5:P140	e : ø9.52	5m
F : ø15.88	10m		6:P125	f : ø9.52	5m
G : ø12.70	5m		7:P63	g : ø9.52	5m
I : ø9.52	5m		8:P25	i : ø6.35	5m
J : ø9.52	30m				
K : ø9.52	5m				
M : ø9.52	5m				

Total length for each pipe size :	ø19.05	C+E=42
	ø15.88	D+F=1+10=11m
	ø12.70	B+G=2+5=7m
	ø9.52	A+I+J+K+M+a+b+c+d+e+f+g=3+5+30+5+5+15+15+5+5+5+5+5=103m
	ø6.35	i=5m
This yields the following result :		=40x0.29+11x0.2+7x0.12+103x0.06+5x0.024+10
		=31.52kg
		≒31.5kg

System WY

4. Installation

4-1. Requirement on installation site

1. No direct thermal radiation to the unit.
2. No possibility of annoying the neighbors by the sound of the unit.
   Valves and refrigerant flow on the Heat source unit may generate noise.
3. Avoid the sites where strong winds blow.
4. With strength to bear the weight of the unit.
5. Drain flow from the unit is cared at heating mode.
6. Enough space for installation and service as shown at 4-2.
7. Avoid the sites where acidic solutions or chemical sprays (sulfur series) are used frequently.
8. The unit should be secure from combustible gas, oil, steam, chemical gas like acidic solution, sulfur gas and so on.

4-2. Spacing

In case of single installation, 600mm or more of back space as front space makes easier access when servicing the unit from rear side.

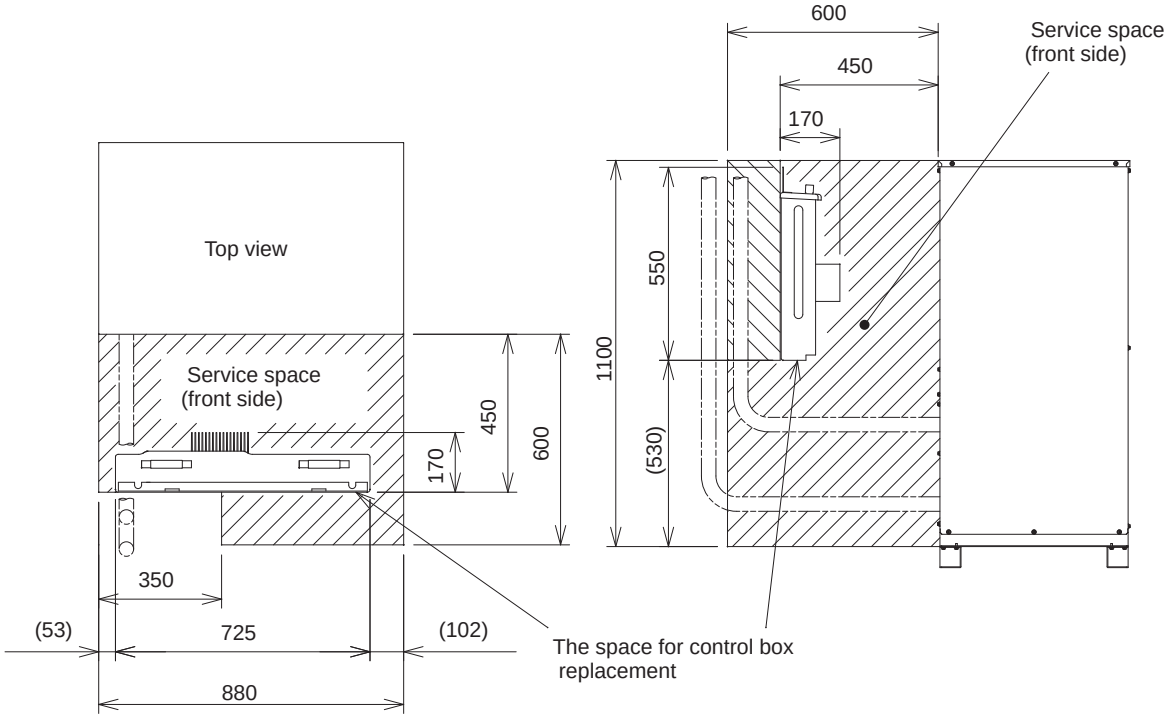

4-3. Piping direction

<Model : PQHY, PQRY-P-YHM-A(-BS)>

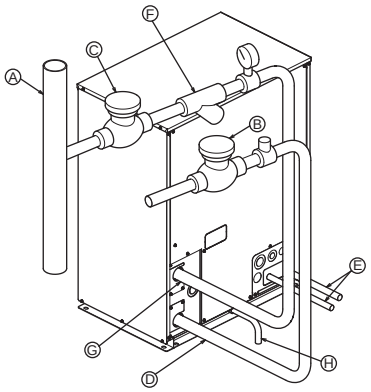

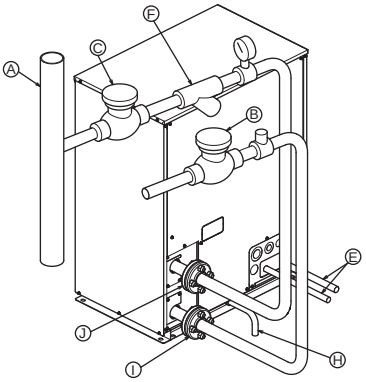

Ⓐ	Main circulating water pipe	Ⓕ	Y-type strainer
Ⓑ	Shutoff valve	Ⓖ	Water inlet (upper)
Ⓒ	Shutoff valve	Ⓗ	Drain pipe
Ⓓ	Water outlet (lower)	Ⓘ	Water outlet flange (lower)
Ⓔ	Refrigerant pipes	Ⓙ	Water intlet flange (upper)

1. Insulation installation

With City Multi WY/ WR2 Series piping, as long as the temperature range of the circulating water is kept to average temperatures year-round (29.4°C[85°F] in the summer, 21.1°C[70°F] in the winter), there is no need to insulate or otherwise protect indoor piping from exposure. You should use insulation in the following situations:

- Any heat source piping.
- Indoor piping in cold-weather regions where frozen pipes are a problem.
- When air coming from the outside causes condensation to form on piping.
- Any drainage piping.

2. Water processing and water quality control

To preserve water quality, use the closed type of cooling tower for WY/ WR2. When the circulating water quality is poor, the water heat exchanger can develop scales, leading to a reduction in heat-exchange power and possible corrosion of the heat exchanger. Please pay careful attention to water processing and water quality control when installing the water circulation system.

- Removal of foreign objects or impurities within the pipes.
  During installation, be careful that foreign objects, such as welding fragments, sealant particles, or rust, do not enter the pipes.
- Water Quality Processing
  ① Depending on the quality of the cold-temperature water used in the air conditioner, the copper piping of the heat exchanger may become corroded. We recommend regular water quality processing.
  Cold water circulation systems using open heat storage tanks are particularly prone to corrosion.
  When using an open-type heat storage tank, install a water-to-water heat exchanger, and use a closed-loop circuit on the air conditioner side. If a water supply tank is installed, keep contact with air to a minimum, and keep the level of dissolved oxygen in the water no higher than 1mg/ℓ.
  ② Water quality standard

Items		Lower mid-range temperature water system		Tendency	
		Recirculating water [20<T<60°C] [68<T<140°F]	Make-up water	Corrosive	Scale-forming
Standard items	pH (25°C)[77°F]	7.0 ~ 8.0	7.0 ~ 8.0	○	○
	Electric conductivity (mS/m) (25°C)[77°F] (μS/cm) (25°C)[77°F]	30 or less [300 or less]	30 or less [300 or less]	○	○
	Chloride ion (mg Cl^-/ℓ)	50 or less	50 or less	○	
	Sulfate ion (mg SO_4^{2-}/ℓ)	50 or less	50 or less	○	
	Acid consumption (pH4.8) (mg $CaCO_3$/ℓ)	50 or less	50 or less		○
	Total hardness (mg $CaCO_3$/ℓ)	70 or less	70 or less		○
	Calcium hardness (mg $CaCO_3$/ℓ)	50 or less	50 or less		○
	Ionic silica (mg SiO_2/ℓ)	30 or less	30 or less		○
Refer-ence items	Iron (mg Fe/ℓ)	1.0 or less	0.3 or less	○	○
	Copper (mg Cu/ℓ)	1.0 or less	0.1 or less	○	
	Sulfide ion (mg S^{2-}/ℓ)	not to be detected	not to be detected	○	
	Ammonium ion (mg NH_4^+/ℓ)	0.3 or less	0.1 or less	○	
	Residual chlorine (mg Cl/ℓ)	0.25 or less	0.3 or less	○	
	Free carbon dioxide (mg CO_2/ℓ)	0.4 or less	4.0 or less	○	
	Ryzner stability index	–	–	○	○

Reference : Guideline of Water Quality for Refrigeration and Air Conditioning Equipment. (JRA GL02E-1994)

③ Please consult with a water quality control specialist about water quality control methods and water quality calculations before using anti-corrosive solutions for water quality management.
④ When replacing a previously installed air conditioning device (even when only the heat exchanger is being replaced), first conduct a water quality analysis and check for possible corrosion.
Corrosion can occur in cold-water systems even if there has been no prior signs of corrosion. If the water quality level has dropped, please adjust water quality sufficiently before replacing the unit.

5. Caution for refrigerant leakage

The installer and/or air conditioning system specialist shall secure safety against refrigerant leakage according to local regulations or standards. The following standard may be applicable if no local regulation or standard is available.

5-1. Refrigerant property

R410A refrigerant is harmless and incombustible. The R410A is heavier than the indoor air in density. Leakage of the refrigerant in a room has possibility to lead to a hypoxia situation. Therefore, the Critial concentration specified below shall not be exceeded even if the leakage happens.

- **Critical concentration**

Critical concentration hereby is the refrigerant concentration in which no human body would be hurt if immediate measures can be taken when refrigerant leakage happens.

Critical concentration of R410A: 0.30kg/m^3
(The weight of refrigeration gas per 1 m^3 air conditioning space.);
* The Critical concentration is subject to ISO5149, EN378-1.

For the CITY MULTI system, the concentration of refrigerant leaked should not have a chance to exceed the Critical concentration in any situntion.

5-2. Confirm the Critical concentration and take countermeasure

The maximum refrigerant leakage concentration (Rmax) is defined as the result of the possible maximum refrigerant weight (Wmax) leaked into a room divided by its room capacity (V). It is referable to Fig. 5-1. The refrigerant of Heat source unit here includes its original charge and additional charge at the site.
The additional charge is calculated according to the refrigerant charging calculation of each kind of Heat source unit, and shall not be over charged at the site. Procedure 5-2-1~3 tells how to confirm maximum refrigerant leakage concentration (Rmax) and how to take countermeasures against a possible leakage.

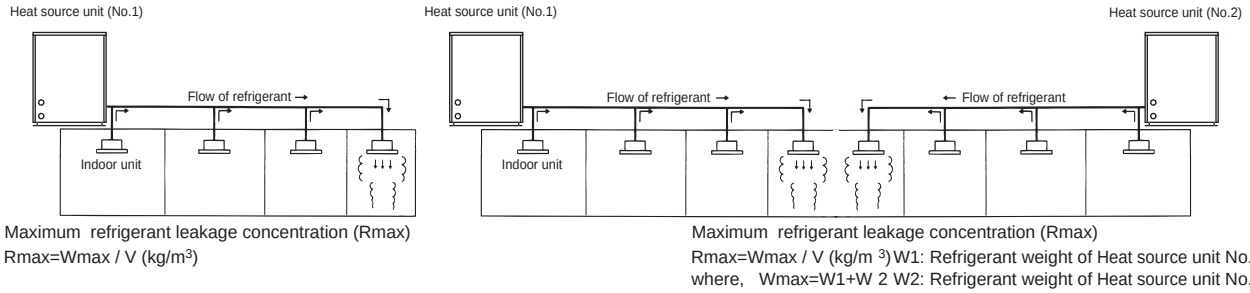

Fig. 5-1 The maximum refrigerant leakage concentration

5-2-1.Find the room capacity (V),
If a room having total opening area more than 0.15% of the floor area at a low position with another room/space, the two rooms/space are considered as one. The total space shall be added up.

5-2-2.Find the possible maximum leakage (Wmax) in the room. If a room has Indoor unit(s) from more than 1 Heat source unit, add up the refrigerant of the Heat source units.

5-2-3.Divide (Wmax) by (V) to get the maximum refrigerant leakage concentration (Rmax).

5-2-4.Find if there is any room in which the maximum refrigerant leakage concentration (Rmax) is over 0.30kg/m^3.
If no, then the CITY MULTI is safe against refrigerant leakage.
If yes, following countermeasure is recommended to do at site.
Countermeasure 1: Let-out (making V bigger)
Design an opening of more than 0.15% of the floor area at a low position of the wall to let out the refrigerant whenever leaked.
e.g. make the upper and lower seams of door big enough.
Countermeasure 2: Smaller total charge (making Wmax smaller)
e.g. Avoid connecting more than 1 Heat source unit to one room.
e.g. Using smaller model size but more Heat source units.
e.g. Shorten the refrigerant piping as much as possible.
Countermeasure 3: Fresh air in from the ceiling (Ventilation)
As the density of the refrigerant is bigger than that of the air. Fresh air supply from the ceiling is better than air exhausting from the ceiling. Fresh air supply solution refers to Fig. 5-2~4.

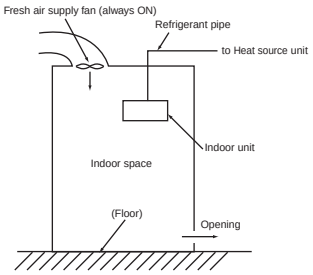

Fig.5-2. Fresh air supply always ON

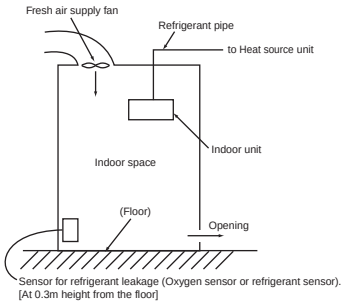

Fig.5-3. Fresh air supply upon sensor action

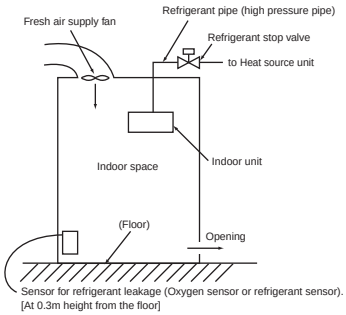

Fig.5-4. Fresh air supply and refrigerant shut-off upon sensor action

Note 1. Countermeasure 3 should be done in a proper way in which the fresh air supply shall be on whenever the leakage happens.
Note 2. In principle, MITSUBISHI ELECTRIC requires proper piping design, installation and air-tight testing after installation to avoid leakage happening.
In the area should earthquake happen, anti-vibration measures should be fully considered.
The piping should consider the extension due to the temperature variation.

CITY MULTI
SYSTEM DESIGN WR2 SERIES

1. Electrical work ..... 4 - 208
   1-1.General cautions ..... 4 - 208
   1-2.Power supply for Indoor unit and Heat source unit ..... 4 - 209
   1-3.Power cable specifications ..... 4 - 215
   1-4.Power supply examples ..... 4 - 216
2. M-NET control ..... 4 - 218
   2-1.Transmission cable length limitation ..... 4 - 218
   2-2.Transmission cable specifications ..... 4 - 219
   2-3.System configuration restrictions ..... 4 - 220
   2-4.Address setting ..... 4 - 223
3. Piping Design ..... 4 - 235
   3-1.R410A Piping material ..... 4 - 235
   3-2.Piping Design ..... 4 - 236
   3-3.Refrigerant charging calculation ..... 4 - 240
4. Installation ..... 4 - 241
   4-1.Requirement on installation site ..... 4 - 241
   4-2.Spacing ..... 4 - 241
   4-3.Piping direction ..... 4 - 242
5. Caution for refrigerant leakage ..... 4 - 243
   5-1.Refrigerant property ..... 4 - 243
   5-2.Confirm the Critical concentration and take countermeasure ..... 4 - 243

1. Electrical work

1-1. General cautions

① Follow ordinance of your governmental organization for technical standard related to electrical equipment, wiring regulations, and guidance of each electric power company.
② Wiring for control (hereinafter referred to as transmission cable) shall be (50mm[1-5/8in.] or more) apart from power source wiring so that it is not influenced by electric noise from power source wiring. (Do not insert transmission cable and power source wire in the same conduit.)
③ Be sure to provide designated grounding work to Heat source unit.
④ Give some allowance to wiring for electrical part box of indoor and Heat source unit, because the box is sometimes removed at the time of service work.
⑤ Never connect 380~415V(220~240V) power source to terminal block of transmission cable. If connected,electrical parts will be burnt out.
⑥ Use 2-core shield cable for transmission cable. If transmission cables of different systems are wired with the same multiple-core cable, the resultant poor transmitting and receiving will cause erroneous operations.

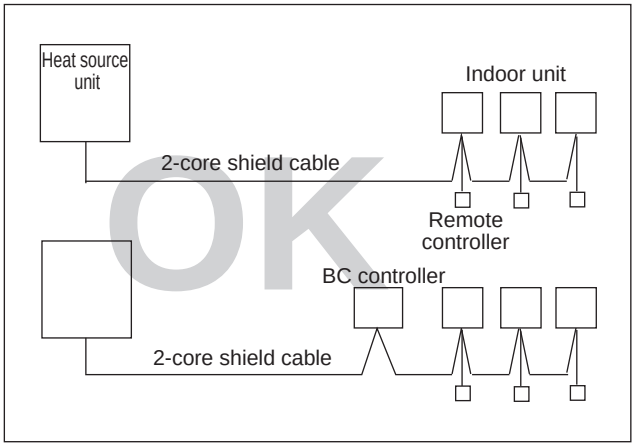

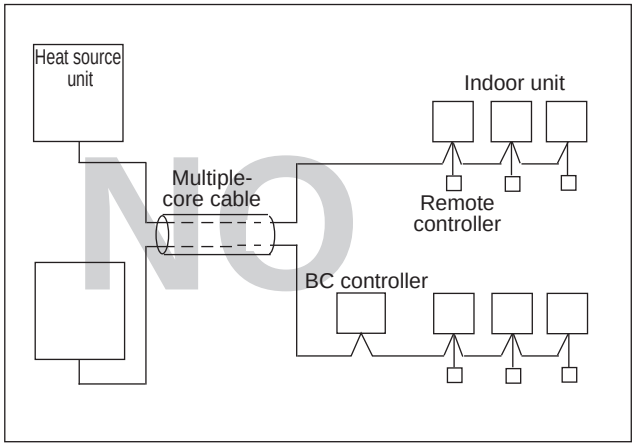

1-2. Power supply for Indoor unit and Heat source unit

1-2-1. Electrical characteristics of Indoor unit

Symbols: MCA : Min.Circuit Amps (=1.25xFLA) FLA : Full Load Amps
IFM :Indoor Fan Motor Output : Fan motor rated output

PMFY-P-VBM-E	Power supply			IFM	
	Volts / Hz	Range +-10%	MCA(A)	Output(kW)	FLA(A)
PMFY-P20VBM-E	220-240V / 50Hz 220V / 60Hz	Max.: 264V Min.: 198V	0.25	0.028	0.20
PMFY-P25VBM-E			0.26	0.028	0.21
PMFY-P32VBM-E			0.26	0.028	0.21
PMFY-P40VBM-E			0.33	0.028	0.26

PLFY-P-VCM-E	Power supply			IFM	
	Volts / Hz	Range +-10%	MCA(A)	Output(kW)	FLA(A)
PLFY-P20VCM-E	220-240V / 50Hz	Max.: 264V Min.: 198V	0.29	0.011	0.23
PLFY-P25VCM-E			0.29	0.015	0.23
PLFY-P32VCM-E			0.35	0.020	0.28
PLFY-P40VCM-E			0.35	0.020	0.28

PLFY-P-VBM-E	Power supply			IFM	
	Volts / Hz	Range +-10%	MCA(A)	Output(kW)	FLA(A)
PLFY-P32VBM-E	220-240V / 50Hz 220V / 60Hz	Max.: 264V Min.: 198V	0.28	0.050	0.22
PLFY-P40VBM-E			0.36	0.050	0.29
PLFY-P50VBM-E			0.36	0.050	0.29
PLFY-P63VBM-E			0.45	0.050	0.36
PLFY-P80VBM-E			0.64	0.050	0.51
PLFY-P100VBM-E			1.25	0.120	1.00
PLFY-P125VBM-E			1.34	0.120	1.07

PLFY-P-VLMD-E	Power supply			IFM	
	Volts / Hz	Range +-10%	MCA(A) (50 / 60Hz)	Output(kW)	FLA(A) (50 / 60Hz)
PLFY-P20VLMD-E	220-240V / 50Hz 220-230V / 60Hz	Max.: 264V Min.: 198V	0.45 / 0.46	0.015	0.36 / 0.37
PLFY-P25VLMD-E			0.45 / 0.46	0.015	0.36 / 0.37
PLFY-P32VLMD-E			0.45 / 0.46	0.015	0.36 / 0.37
PLFY-P40VLMD-E			0.50 / 0.53	0.015	0.40 / 0.42
PLFY-P50VLMD-E			0.51 / 0.54	0.020	0.41 / 0.43
PLFY-P63VLMD-E			0.61 / 0.64	0.020	0.49 / 0.51
PLFY-P80VLMD-E			0.90 / 0.93	0.020	0.72 / 0.74
PLFY-P100VLMD-E			0.94 / 1.10	0.030	0.75 / 0.88
PLFY-P125VLMD-E			1.69 / 1.69	0.078x2	1.35 / 1.35

PEFY-P-VMR-E-L/R	Power supply			IFM	
	Volts / Hz	Range +-10%	MCA(A) (50 / 60Hz)	Output(kW)	FLA(A) (50 / 60Hz)
PEFY-P20VMR-E-L/R	220-240V / 50Hz 220-230V / 60Hz	Max.: 264V Min.: 198V	0.37 / 0.37	0.018	0.29 / 0.29
PEFY-P25VMR-E-L/R			0.37 / 0.37	0.018	0.29 / 0.29
PEFY-P32VMR-E-L/R			0.43 / 0.48	0.023	0.34 / 0.38

PEFY-P-VMS1-E	Power supply			IFM	
	Volts / Hz	Range +-10%	MCA(A) (50 / 60Hz)	Output(kW)	FLA(A) (50 / 60Hz)
PEFY-P15VMS1-E	220-240V / 50Hz 220-240V / 60Hz	Max.: 264V Min.: 198V	0.63 / 0.63	0.096	0.50 / 0.50
PEFY-P20VMS1-E			0.70 / 0.70	0.096	0.56 / 0.56
PEFY-P25VMS1-E			0.75 / 0.75	0.096	0.60 / 0.60
PEFY-P32VMS1-E			0.75 / 0.75	0.096	0.60 / 0.60
PEFY-P40VMS1-E			0.83 / 0.82	0.096	0.66 / 0.65
PEFY-P50VMS1-E			1.02 / 1.00	0.096	0.81 / 0.80
PEFY-P63VMS1-E			1.08 / 1.07	0.096	0.86 / 0.85

Symbols: MCA : Min.Circuit Amps (=1.25xFLA) FLA : Full Load Amps
IFM :Indoor Fan Motor Output : Fan motor rated output

PEFY-P-VMS1L-E	Power supply			IFM	
	Volts / Hz	Range +-10%	MCA(A) (50 / 60Hz)	Output(kW)	FLA(A) (50 / 60Hz)
PEFY-P15VMS1L-E	220-240V / 50Hz 220-240V / 60Hz	Max.: 264V Min.: 198V	0.46 / 0.46	0.096	0.37 / 0.37
PEFY-P20VMS1L-E			0.54 / 0.54	0.096	0.43 / 0.43
PEFY-P25VMS1L-E			0.59 / 0.59	0.096	0.47 / 0.47
PEFY-P32VMS1L-E			0.59 / 0.59	0.096	0.47 / 0.47
PEFY-P40VMS1L-E			0.68 / 0.68	0.096	0.54 / 0.54
PEFY-P50VMS1L-E			0.84 / 0.84	0.096	0.67 / 0.67
PEFY-P63VMS1L-E			0.91 / 0.91	0.096	0.73 / 0.73

PEFY-P-VMH-E	Power supply			IFM	
	Volts / Hz	Range +-10%	MCA(A) (50 / 60Hz)	Output(kW)	FLA(A) (50 / 60Hz)
PEFY-P40VMH-E	220-240V / 50Hz 220-240V / 60Hz	Max.: 264V Min.: 198V	1.21 / 1.61	0.08	0.97 / 1.29
PEFY-P50VMH-E			1.21 / 1.61	0.08	0.97 / 1.29
PEFY-P63VMH-E			1.49 / 1.95	0.12	1.19 / 1.56
PEFY-P71VMH-E			1.58 / 2.18	0.14	1.26 / 1.74
PEFY-P80VMH-E			1.85 / 2.40	0.18	1.48 / 1.92
PEFY-P100VMH-E			3.03 / 3.93	0.26	2.42 / 3.14
PEFY-P125VMH-E			3.03 / 3.93	0.26	2.42 / 3.14
PEFY-P140VMH-E			3.10 / 3.98	0.26	2.48 / 3.18
PEFY-P200VMH-E	380-415V / 50Hz 380-415V / 60Hz	Max.: 456V Min.: 342V	2.03 / 2.33	0.76	1.62 / 1.86
PEFY-P250VMH-E			2.50 / 2.88	1.08	2.00 / 2.30

PEFY-P-VMA-E	Power supply			IFM	
	Volts / Hz	Range +-10%	MCA(A)	Output(kW)	FLA(A)
PEFY-P20VMA-E	220-240V / 50Hz 220-240V / 60Hz	Max.: 264V Min.: 198V	1.03	0.085	0.82
PEFY-P25VMA-E			1.03	0.085	0.82
PEFY-P32VMA-E			1.18	0.085	0.95
PEFY-P40VMA-E			1.43	0.085	1.14
PEFY-P50VMA-E			1.54	0.085	1.23
PEFY-P63VMA-E			2.22	0.121	1.78
PEFY-P71VMA-E			2.46	0.121	1.97
PEFY-P80VMA-E			2.47	0.121	1.98
PEFY-P100VMA-E			3.30	0.244	2.64
PEFY-P125VMA-E			3.39	0.244	2.71
PEFY-P140VMA-E			3.29	0.244	2.63

PEFY-P-VMAL-E	Power supply			IFM	
	Volts / Hz	Range +-10%	MCA(A)	Output(kW)	FLA(A)
PEFY-P20VMAL-E	220-240V / 50Hz 220-240V / 60Hz	Max.: 264V Min.: 198V	0.92	0.085	0.74
PEFY-P25VMAL-E			0.92	0.085	0.74
PEFY-P32VMAL-E			1.07	0.085	0.86
PEFY-P40VMAL-E			1.32	0.085	1.06
PEFY-P50VMAL-E			1.40	0.085	1.12
PEFY-P63VMAL-E			2.08	0.121	1.67
PEFY-P71VMAL-E			2.32	0.121	1.86
PEFY-P80VMAL-E			2.36	0.121	1.89
PEFY-P100VMAL-E			3.19	0.244	2.55
PEFY-P125VMAL-E			3.27	0.244	2.62
PEFY-P140VMAL-E			3.17	0.244	2.53

PEFY-P-VMH-E-F	Power supply			IFM	
	Volts / Hz	Range +-10%	MCA(A) (50 / 60Hz)	Output(kW)	FLA(A) (50 / 60Hz)
PEFY-P80VMH-E-F	220-240V / 50Hz 208-230V / 60Hz	Max.: 264V Min.: 187V	0.92 / 1.15	0.09	0.73 / 0.92
PEFY-P140VMH-E-F			1.58 / 1.84	0.14	1.26 / 1.47
PEFY-P200VMH-E-F	380-415V / 50Hz 380-415V / 60Hz	Max.: 456V Min.: 342V	0.73 / 0.93	0.20	0.58 / 0.74
PEFY-P250VMH-E-F			0.85 / 1.08	0.23	0.68 / 0.86

Symbols: MCA : Min.Circuit Amps (=1.25xFLA) FLA : Full Load Amps
IFM :Indoor Fan Motor Output : Fan motor rated output

PKFY-P-VBM-E	Power supply			IFM	
	Volts / Hz	Range +-10%	MCA(A)	Output(kW)	FLA(A)
PKFY-P15VBM-E	220-240V / 50Hz 220V / 60Hz	Max.: 264V Min.: 198V	0.25	0.017	0.20
PKFY-P20VBM-E			0.25	0.017	0.20
PKFY-P25VBM-E			0.25	0.017	0.20

PKFY-P-VHM-E	Power supply			IFM	
	Volts / Hz	Range +-10%	MCA(A)	Output(kW)	FLA(A)
PKFY-P32VHM-E	220-240V / 50Hz 220V / 60Hz	Max.: 264V Min.: 198V	0.38	0.030	0.30
PKFY-P40VHM-E			0.38	0.030	0.30
PKFY-P50VHM-E			0.38	0.030	0.30

PKFY-P-VKM-E	Power supply			IFM	
	Volts / Hz	Range +-10%	MCA(A)	Output(kW)	FLA(A)
PKFY-P63VKM-E	220-240V / 50Hz 220V / 60Hz	Max.: 264V Min.: 198V	0.36	0.056	0.29
PKFY-P100VKM-E			0.63	0.056	0.50

PCFY-P-VKM-E	Power supply			IFM	
	Volts / Hz	Range +-10%	MCA(A)	Output(kW)	FLA(A)
PCFY-P40VKM-E	220-240V / 50Hz 220V / 60Hz	Max.: 264V Min.: 198V	0.35	0.090	0.28
PCFY-P63VKM-E			0.41	0.095	0.33
PCFY-P100VKM-E			0.81	0.160	0.65
PCFY-P125VKM-E			0.95	0.160	0.76

PFFY-P-VKM-E	Power supply			IFM	
	Volts / Hz	Range +-10%	MCA(A)	Output(kW)	FLA(A)
PFFY-P20VKM-E	220-240V / 50Hz	Max.: 264V Min.: 198V	0.25	0.03x2	0.20
PFFY-P25VKM-E			0.25	0.03x2	0.20
PFFY-P32VKM-E			0.25	0.03x2	0.20
PFFY-P40VKM-E			0.30	0.03x2	0.24

PFFY-P-VLEM-E	Power supply			IFM	
	Volts / Hz	Range +-10%	MCA(A) (50 / 60Hz)	Output(kW)	FLA(A) (50 / 60Hz)
PFFY-P20VLEM-E	220-240V / 50Hz 208-230V / 60Hz	Max.: 264V Min.: 187V	0.24 / 0.31	0.015	0.19 / 0.25
PFFY-P25VLEM-E			0.24 / 0.31	0.015	0.19 / 0.25
PFFY-P32VLEM-E			0.36 / 0.38	0.018	0.29 / 0.30
PFFY-P40VLEM-E			0.40 / 0.41	0.030	0.32 / 0.33
PFFY-P50VLEM-E			0.50 / 0.51	0.035	0.40 / 0.41
PFFY-P63VLEM-E			0.58 / 0.59	0.050	0.46 / 0.47

Symbols: MCA : Min.Circuit Amps (=1.25xFLA) FLA : Full Load Amps
IFM :Indoor Fan Motor Output : Fan motor rated output

PFFY-P-VLRM-E	Power supply			IFM	
	Volts / Hz	Range +-10%	MCA(A) (50 / 60Hz)	Output(kW)	FLA(A) (50 / 60Hz)
PFFY-P20VLRM-E	220-240V / 50Hz 208-230V / 60Hz	Max.: 264V Min.: 187V	0.24 / 0.31	0.015	0.19 / 0.25
PFFY-P25VLRM-E			0.24 / 0.31	0.015	0.19 / 0.25
PFFY-P32VLRM-E			0.36 / 0.38	0.018	0.29 / 0.30
PFFY-P40VLRM-E			0.40 / 0.41	0.030	0.32 / 0.33
PFFY-P50VLRM-E			0.50 / 0.51	0.035	0.40 / 0.41
PFFY-P63VLRM-E			0.58 / 0.59	0.050	0.46 / 0.47

PFFY-P-VLRMM-E	Power supply			IFM	
	Volts / Hz	Range +-10%	MCA(A) (50 / 60Hz)	Output(kW)	FLA(A) (50 / 60Hz)
PFFY-P20VLRMM-E	220-240V / 50Hz	Max.: 264V Min.: 198V	0.59 / 0.58	0.096	0.47 / 0.46
PFFY-P25VLRMM-E			0.59 / 0.58	0.096	0.47 / 0.46
PFFY-P32VLRMM-E			0.69 / 0.69	0.096	0.55 / 0.55
PFFY-P40VLRMM-E			0.78 / 0.76	0.096	0.62 / 0.61
PFFY-P50VLRMM-E			0.80 / 0.79	0.096	0.64 / 0.63
PFFY-P63VLRMM-E			0.93 / 0.93	0.096	0.74 / 0.74

GUF-RDH3	Power supply			IFM	
	Volts / Hz	Range +-10%	MCA(A) (50 / 60Hz)	Output(kW)	FLA(A) (50 / 60Hz)
GUF-50RD(H)3	220-240V / 50Hz 220V / 60Hz	Max.: 264V Min.: 198V	1.85 / 1.85	0.081x2	1.48 / 1.48
GUF-100RD(H)3			3.49 / 3.49	0.16x2	2.79 / 2.79

1-2-2. Electrical characteristics of Heat source unit at cooling mode

PQRY-P-YHM	Unit combination	Outdoor units				Compressor		RLA(A)	
		Hz	Volts	Voltage range	MCA(A)	Out-put(kw)	SC(A)	cooling	heating
PQRY-P200YHM-A(-BS)(-H)	-	50/60	380 400 415	Max:456 Min:342	16.02	4.6	8	6.6/6.3/6.1	6.9/6.6/6.3
PQRY-P250YHM-A(-BS)(-H)	-				17.39	6.3		9.3/8.8/8.5	9.7/9.3/8.9
PQRY-P300YHM-A(-BS)(-H)	-				19.33	7.4		12.5/11.9/11.5	13.7/13.0/12.5
PQRY-P400YSHM-A(-BS)(-H)	PQRY-P200YHM-A(-BS)(-H)				33.94	4.6		14.0/13.3/12.8	14.6/13.8/13.3
	PQRY-P200YHM-A(-BS)(-H)					4.6			
PQRY-P450YSHM-A(-BS)(-H)	PQRY-P200YHM-A(-BS)(-H)				35.93	4.6		16.7/15.9/15.3	17.5/16.7/16.1
	PQRY-P250YHM-A(-BS)(-H)					6.3			
PQRY-P500YSHM-A(-BS)(-H)	PQRY-P250YHM-A(-BS)(-H)				36.46	6.3		19.5/18.5/17.8	20.3/19.3/18.6
	PQRY-P250YHM-A(-BS)(-H)					6.3			
PQRY-P550YSHM-A(-BS)(-H)	PQRY-P250YHM-A(-BS)(-H)				39.60	6.3		22.9/21.8/21.0	24.7/23.4/22.6
	PQRY-P300YHM-A(-BS)(-H)					7.4			
PQRY-P600YSHM-A(-BS)(-H)	PQRY-P300YHM-A(-BS)(-H)				40.60	7.4		26.3/25.0/24.1	28.9/27.4/26.4
	PQRY-P300YHM-A(-BS)(-H)					7.4			

1-2-3. Electrical characteristics of BC controller

Symbols: MCA : Max. Circuit Amps (=1.25 x max. RLA), MFA : Max. Fuse Amps, RLA : Rated Load Amps

BC controller	Power supply					RLA(A)
	Hz	Volts	Range+-10%	MCA(A)	MFA(A)	
CMB-P104V-G1	50/60	220	Max.: 264V Min.: 198V	0.45	15	0.31
		230				0.34
		240				0.36
CMB-P105V-G1		220		0.55		0.38
		230				0.41
		240				0.44
CMB-P106V-G1		220		0.65		0.45
		230				0.48
		240				0.52
CMB-P108V-G1		220		0.85		0.58
		230				0.63
		240				0.68
CMB-P1010V-G1		220		1.04		0.71
		230				0.77
		240				0.83
CMB-P1013V-G1		220		1.34		0.92
		230				1.00
		240				1.07
CMB-P1016V-G1		220		1.63		1.12
		230				1.22
		240				1.30
CMB-P108V-GA1		220		0.85		0.58
		230				0.63
		240				0.68
CMB-P1010V-GA1		220		1.04		0.71
		230				0.77
		240				0.83
CMB-P1013V-GA1		220		1.34		0.92
		230				1.00
		240				1.07
CMB-P1016V-GA1		220		1.63		1.12
		230				1.22
		240				1.30
CMB-P1016V-HA1		220		1.63		1.12
		230				1.22
		240				1.30
CMB-P104V-GB1		220		0.40		0.28
		230				0.30
		240				0.32
CMB-P108V-GB1		220		0.79		0.55
		230				0.59
		240				0.63
CMB-P1016V-HB1		220		1.58		1.08
		230				1.17
		240				1.26

1-3. Power cable specifications

Thickness of wire for main power supply, capacities of the switch and system impedance

	Model	Minimum wire thickness (mm^2)			Breaker for current leakage	Local swtich (A)		Breaker for wiring (NFB) (A)	Max..Permissive System Impedance
		Main cable	Branch	Ground		Capacity	Fuse		
Heat source unit	PQRY-P200YHM-A(-BS)(-H)	4.0	-	4.0	30A 100mA 0.1sec. or less	25	25	30	(apply to EN61000-3-3)
	PQRY-P250YHM-A(-BS)(-H)	4.0	-	4.0	30A 100mA 0.1sec. or less	25	25	30	(apply to EN61000-3-3)
	PQRY-P300YHM-A(-BS)(-H)	4.0	-	4.0	30A 100mA 0.1sec. or less	25	25	30	(apply to EN61000-3-3)
Total operating current of the indoor unit	16A or less	1.5	1.5	1.5	20A 30mA 0.1sec. or less	16	16	20	(apply to EN61000-3-3)
	25A or less	2.5	2.5	2.5	30A 30mA 0.1sec. or less	25	25	30	(apply to EN61000-3-3)
	32A or less	4.0	4.0	4.0	40A 30mA 0.1sec. or less	32	32	40	(apply to EN61000-3-3)

*1: Meet technical requirements of IEC61000-3-3

1. Use dedicated power supplies for the outdoor unit and indoor unit. Ensure OC and OS are wired individually.
2. Bear in mind ambient conditions (ambient temperature,direct sunlight, rain water,etc.) when proceeding with the wiring and connections.
3. The wire size is the minimum value for metal conduit wiring. If the voltage drops, use a wire that is one rank thicker in diameter. Make sure the power-supply voltage does not drop more than 10%.
4. Specific wiring requirements should adhere to the wiring regulations of the region.
5. Power supply cords of parts of appliances for outdoor use shall not be lighter than polychloroprene sheathed flexible cord (design 245 IEC57). For example, use wiring such as YZW.
6. A switch with at least 3 mm contact separation in each pole shall be provided by the Air Conditioner installer.

⚠WARNING

- Be sure to use specified wires for connections and ensure no external force is imparted to terminal connections. If connections are not fixed firmly, heating or fire may result.
- Be sure to use the appropriate type of overcurrent protection switch. Note that generated overcurrent may include some amount of direct current.

⚠CAUTION

- Some installation sites may require attachment of an earth leakage breaker for the inverter. If no earth leakage breaker is installed, there is a danger of electric shock.
- Do not use anything other than a breaker and fuse with the correct capacity. Using a fuse or wire of too large capacity may cause malfunction or fire.

Note

- This device is intended for the connection to a power supply system with a maximum permissible system impedance shown in the above table at the interface point (power service box) of the user's supply.
- The user must ensure that this device is connected only to a power supply system which fulfils the requirement above.
  If necessary, the user can ask the public power supply company for the system impedance at the interface point.
- This equipment complies with IEC 61000-3-12 provided that the short-circuit power Ssc is greater than or equal to Ssc(*2) at the interface point between the user's supply and the public system. It is the responsibility of the installer or user of the equipment to ensure, by consultation with the distribution network operator if necessary, that the equipment is connected only to a supply with a short-circuit power Ssc greater than or equal to Ssc(*2).

Ssc(*2)

Model	Ssc(MVA)
PQRY-P200YHM	1.24
PQRY-P250YHM	1.35
PQRY-P300YHM	1.50

1-4. Power supply examples

1-4-1.PQRY-P200-300YHM

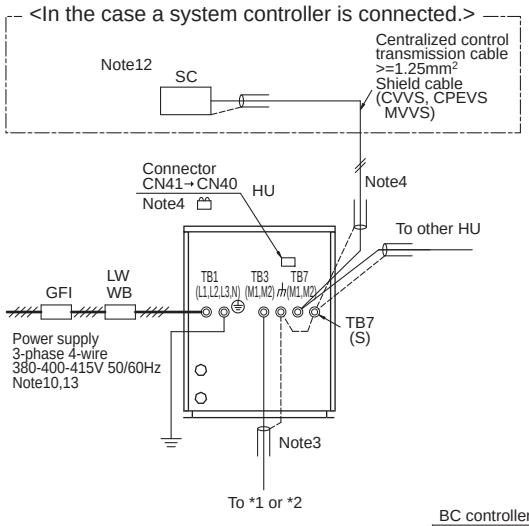

Note:
1 The transmission cable is not-polarity double-wire.
2 Symbol ◎ means a screw terminal for wiring.
3 The shield wire of transmission cable should be connected to the grounding terminal at Heat source unit. All shield wire of M-Net transmission cable among Indoor units should be connected to the S terminal at Indoor unit or all shield wire should be connected together.
The broken line at the scheme means shield wire.
4 When the Heat source unit connected with system controller, power-supply to TB7 of the heat source unit(s) is needed. The connector change from CN41 to CN40 at one of the heat source units will enable the heat source unit to supply power to TB7, or an extra power supplying unit PAC-SC51KUA should be used. The transmission cable (above 1.25mm², shielded, CVVS/CPEVS/MVVS) among Heat source units and system controllers is called centralized control transmission cable. The shield wire of the centralized control transmission cable must be grounded at the Heat source unit whose CN41 is changed to CN40.
5 MA R/C transmission cable (0.3-1.25mm²) must be less than 200m in length, while ME R/C transmission cable (0.3-1.25mm²) must be less than 10m in length. But transmission cable to the ME R/C can be extend using a M-NET cable (>=1.25mm²) when the length is counted in the M-Net length. Both Compact MA and ME R/C transmission cables size 0.75~1.25mm² in thickness.
6 MA remote controller and ME remote controller should not be grouped together.
7 If using 1 or 2 (main/sub) MA remote controller to control more than 1 Indoor unit, use MA transmission cable to connect all the TB15 terminals of the Indoor units. It is called "Grouping".
If using 1 or 2 (main/sub) ME remote controller control more than 1 indoor unit, set address to Indoor unit and ME remote controller. For the method, refer to 2-4. "Address Setting".
8 Indoor board consumes power from TB3. The power balance should be considered according to System Design 2-3 "System configuration restrictions".
9 If Transmission booster is needed, be sure to connect the shield wires to the both sides to the booster.
10 The critical current for choosing power source equipment is approximate 1.4 times of total rated current of the Heat source unit(s) or Indoor unit(s).
11 Numbers shown with ( ) indicates a diameter of the compact remote controller.
12 When System controller (SC) is connected to the system, turn the SW2-1 on.
13 The phases of electricity power must be confirmed to be right used. Phase-reverse, or phase-missing could break the controllers.

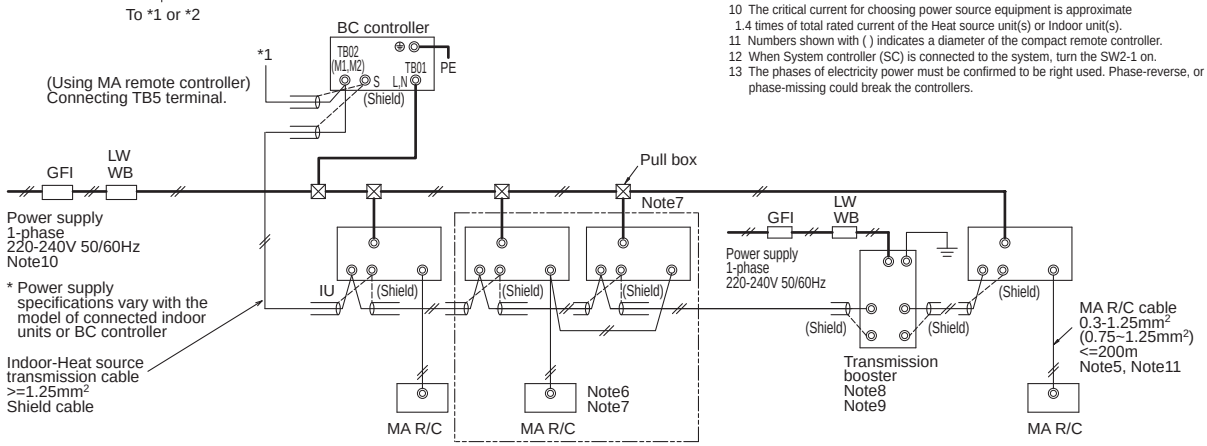

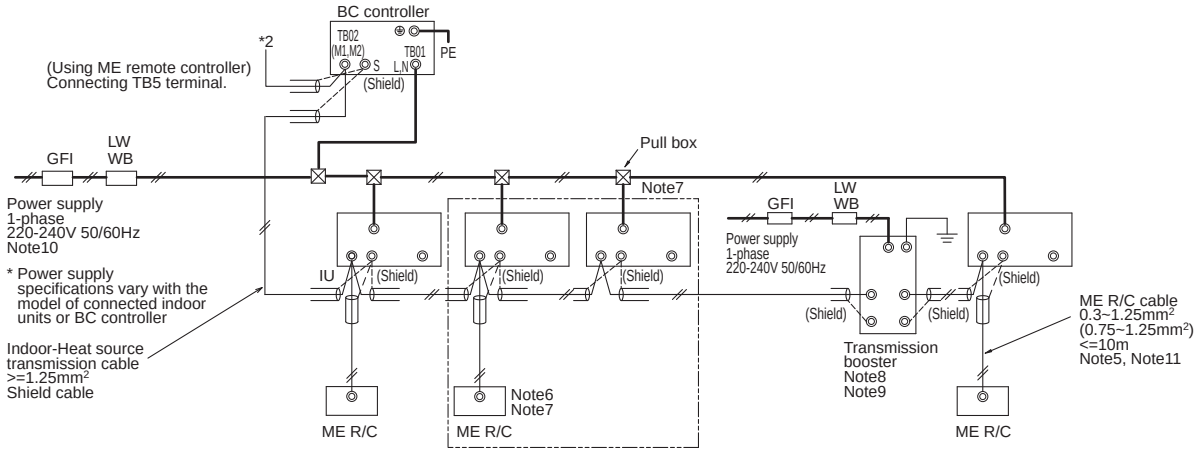

Symbol		Model	Ground-fault interrupter *1, *2	Local switch BKC <A>	Local switch OCP*3 <A>	Wiring breaker (NFB) <A>	Minimum Wire thickness Power wire <mm²>	Minimum Wire thickness Earth wire <mm²>
GFI	Ground-fault interrupter	PQRY-P200YHM	30A 100mA 0.1sec. or less	25	25	30	4	4
LW	Local switch	PQRY-P250YHM	30A 100mA 0.1sec. or less	25	25	30	4	4
BKC	Breaker capacity	PQRY-P300YHM	30A 100mA 0.1sec. or less	25	25	30	4	4
OCP	Over-current protector							
WB	Wiring breaker							
NFB	Non-fuse breaker							
HU	Heat source unit							
IU	Indoor unit							
SC	System controller							
MA R/C	MA remote controller							
ME R/C	ME remote controller							

*1 The Ground-fault interrupter should support Inverter circuit. (e.g. Mitsubishi Electric's NV-C series or equivalent).
*2 Ground-fault interrupter should combine using of local switch or wiring breaker.
*3 It shows data for B-type fuse of the breaker for current leakage.

1-4-2.PQRY-P400-600YSHM

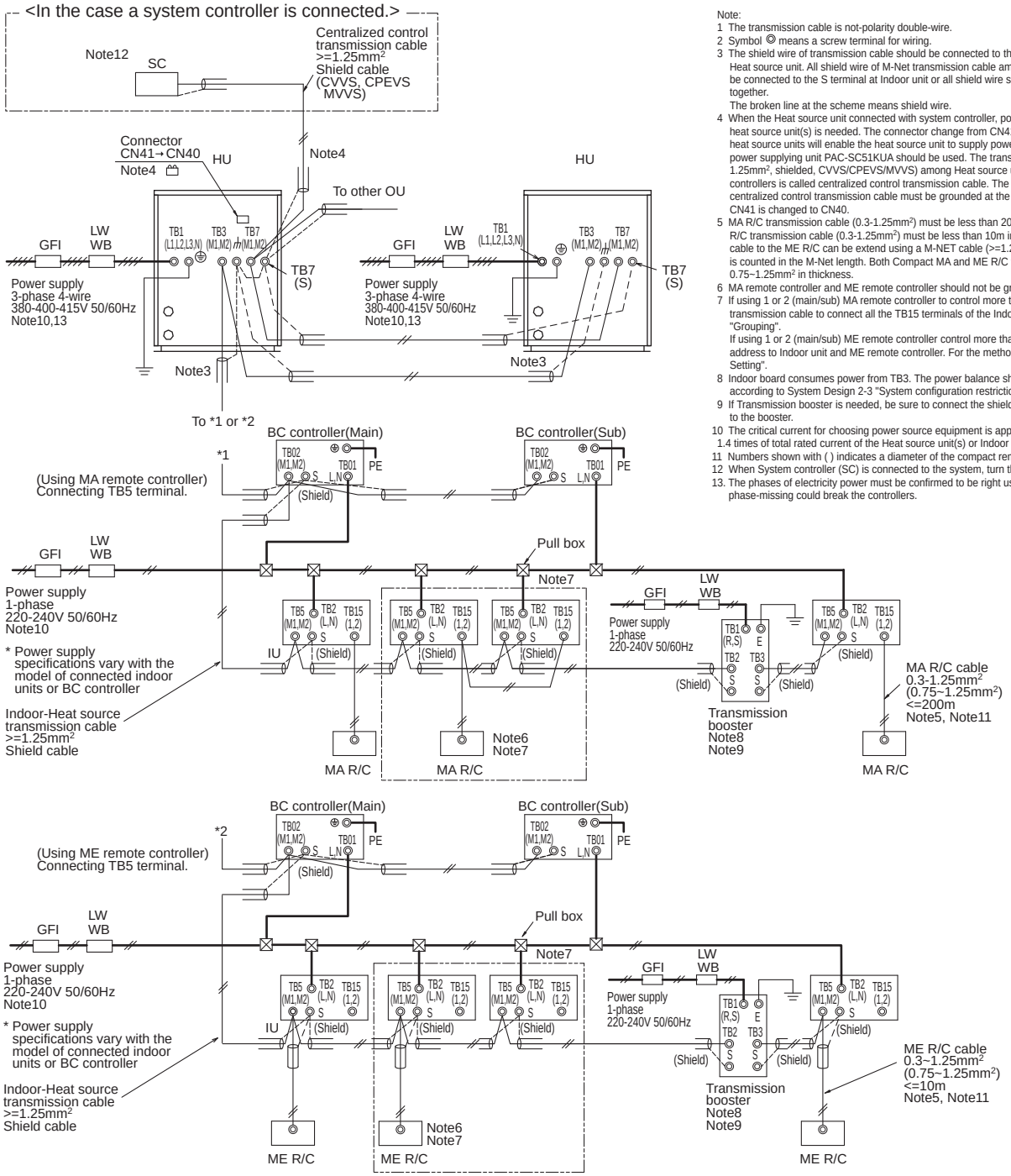

Note:
1 The transmission cable is not-polarity double-wire.
2 Symbol ◎ means a screw terminal for wiring.
3 The shield wire of transmission cable should be connected to the grounding terminal at Heat source unit. All shield wire of M-Net transmission cable among Indoor units should be connected to the S terminal at Indoor unit or all shield wire should be connected together.
The broken line at the scheme means shield wire.
4 When the Heat source unit connected with system controller, power-supply to TB7 of the heat source unit(s) is needed. The connector change from CN41 to CN40 at one of the heat source units will enable the heat source unit to supply power to TB7, or an extra power supplying unit PAC-SC51KUA should be used. The transmission cable (above 1.25mm^2, shielded, CVVS/CPEVS/MVVS) among Heat source units and system controllers is called centralized control transmission cable. The shield wire of the centralized control transmission cable must be grounded at the Heat source unit whose CN41 is changed to CN40.
5 MA R/C transmission cable (0.3-1.25mm^2) must be less than 200m in length, while ME R/C transmission cable (0.3-1.25mm^2) must be less than 10m in length. But transmission cable to the ME R/C can be extend using a M-NET cable (>=1.25mm^2) when the length is counted in the M-Net length. Both Compact MA and ME R/C transmission cables size 0.75~1.25mm^2 in thickness.
6 MA remote controller and ME remote controller should not be grouped together.
7 If using 1 or 2 (main/sub) MA remote controller to control more than 1 Indoor unit, use MA transmission cable to connect all the TB15 terminals of the Indoor units. It is called "Grouping".
If using 1 or 2 (main/sub) ME remote controller control more than 1 indoor unit, set address to Indoor unit and ME remote controller. For the method, refer to 2-4. "Address Setting".
8 Indoor board consumes power from TB3. The power balance should be considered according to System Design 2-3 "System configuration restrictions".
9 If Transmission booster is needed, be sure to connect the shield wires to the both sides to the booster.
10 The critical current for choosing power source equipment is approximate 1.4 times of total rated current of the Heat source unit(s) or Indoor unit(s).
11 Numbers shown with ( ) indicates a diameter of the compact remote controller.
12 When System controller (SC) is connected to the system, turn the SW2-1 on.
13. The phases of electricity power must be confirmed to be right used. Phase-reverse, or phase-missing could break the controllers.

Symbol		Model	Ground-fault interrupter *1, *2	Local switch BCY <A>	Local switch OCP*3 <A>	Wiring breaker (NFB) <A>	Minimum Wire thickness Power wire <mm2>	Minimum Wire thickness Earth wire <mm2>
GFI	Ground-fault interrupter	PQRY-P200YHM	30A 100mA 0.1sec. or less	25	25	30	4	4
LW	Local switch	PQRY-P250YHM	30A 100mA 0.1sec. or less	25	25	30	4	4
BKC	Breaker capacity	PQRY-P300YHM	30A 100mA 0.1sec. or less	25	25	30	4	4
OCP	Over-current protector							
WB	Wiring breaker							
NFB	Non-fuse breaker							
HU	Heat source unit							
IU	Indoor unit							
SC	System controller							
MA R/C	MA remote controller							
ME R/C	ME remote controller							

*1 The Ground-fault interrupter should support Inverter circuit. (e.g. Mitsubishi Electric's NV-C series or equivalent).
*2 Ground-fault interrupter should combine using of local switch or wiring breaker.
*3 It shows data for B-type fuse of the breaker for current leakage.

System WR2

2-1. Transmission cable length limitation

2-1-1. Using MA Remote controller (PQRY-P-YHM)

Long transmission cable causes voltage down, therefore, the length limitation should be obeyed to secure proper transmission.

Max. length via Heat source (M-NET cable)	L1+L2+L3+L4, L1+L2+L6+L7, L3+L4+L6+L7	<=500m[1640ft.]	1.25mm^2 [AWG16] or thicker
Max. length to Heat source (M-NET cable)	L1+L8, L3+L4, L6, L2+L6+L8, L7	<=200m[656ft.]	1.25mm^2 [AWG16] or thicker
Max. length from MA to Indoor	a1+a2, a1+a2+a3+a4	<=200m[656ft.]	0.3-1.25 mm^2 [AWG22-16]
24VDC to AG-150A	n	<=50m[164ft.]	0.75-2.0 mm^2 [AWG18-14]

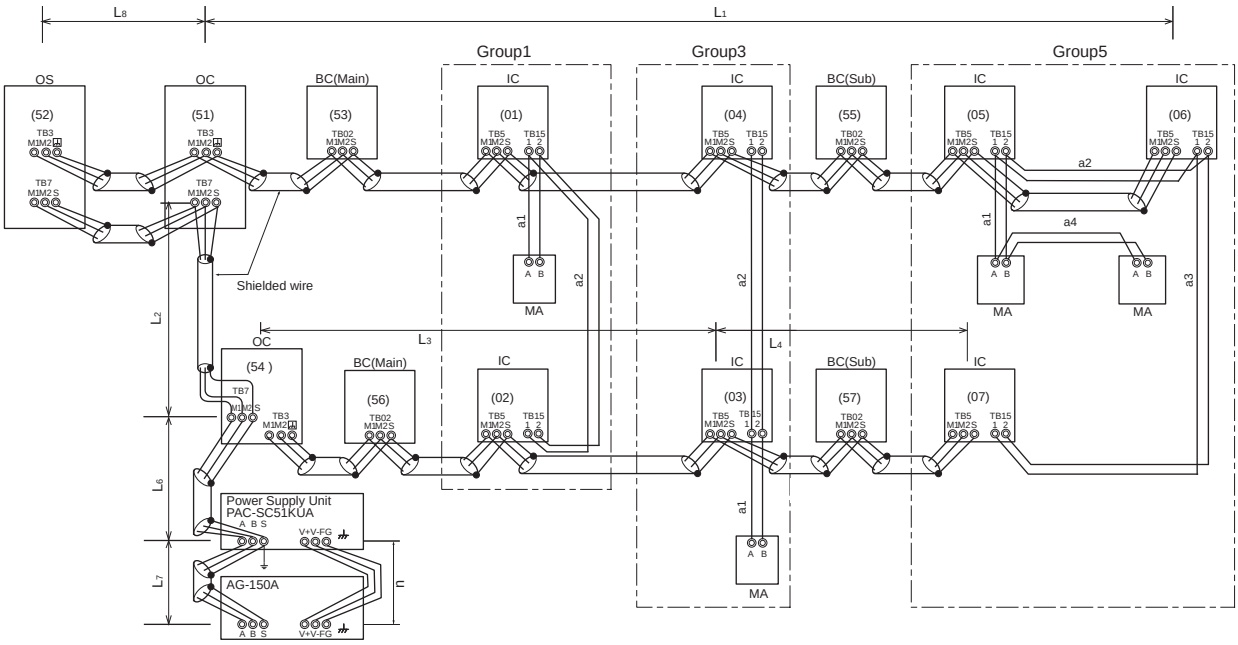

OC, OS : Heat source unit controller; IC: Indoor unit controller; MA: MA remote controller

2-1-2. Using ME Remote controller (PQRY-P-YHM)

Long transmission cable causes voltage down, therefore, the length limitation should be obeyed to secure proper transmission.

Max. length via Heat source (M-NET cable)	L1+L2+L3+L4, L1+L2+L6+L7,L1+L2+L3+L5, L3+L4+L6+L7	<=500m[1640ft.]	1.25mm^2 [AWG16] or thicker
Max. length to Heat source (M-NET cable)	L1+L8, L3+L4, L6, L2+L6+L8, L7, L3+L5	<=200m[656ft.]	1.25mm^2 [AWG16] or thicker
Max. length from ME to Indoor	e1, e2+e3, e4	<=10m[32ft.]*1	0.3-1.25 mm^2 [AWG22-16] *1
24VDC to AG-150A	n	<=50m[164ft.]	0.75-2.0 mm^2 [AWG18-14]

*1. If the length from ME to Indoor exceed 10m, use 1.25 mm^2 [AWG16] shielded cable, but the total length should be counted into Max.length via Heat source.

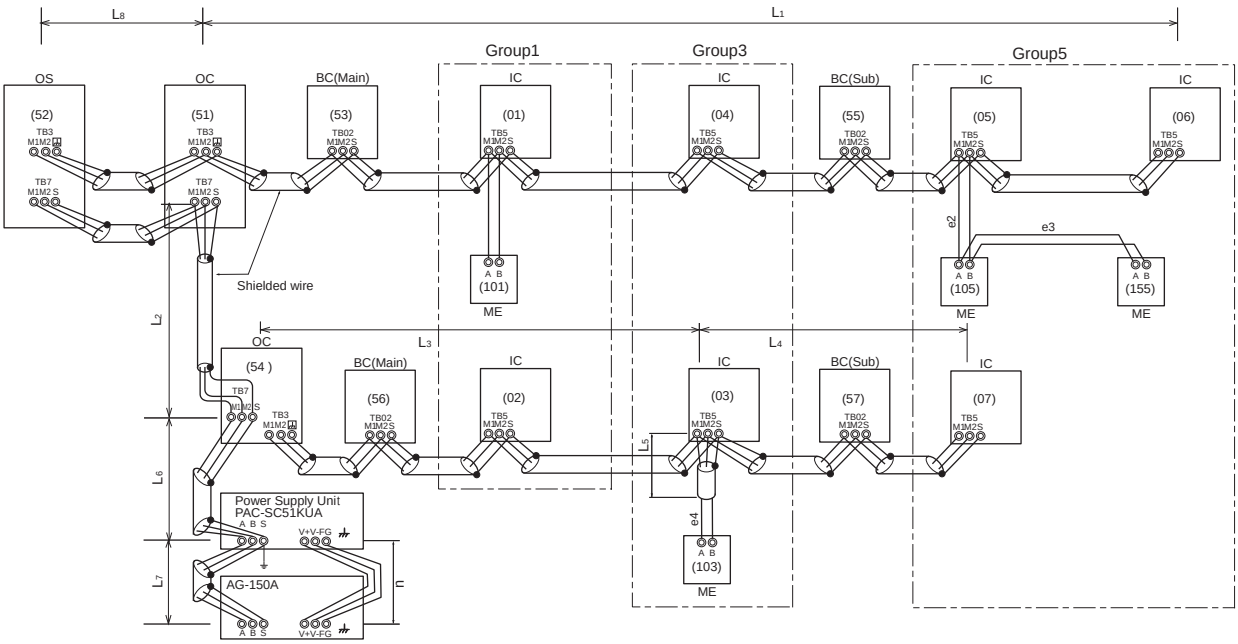

OC, OS: Heat source unit controller; IC: Indoor unit controller; ME: ME remote controller

2-2. Transmission cable specifications

	Transmission cables (Li)	ME Remote controller cables	MA Remote controller cables
Type of cable	Shielding wire (2-core) CVVS, CPEVS or MVVS	Sheathed 2-core cable (unshielded) CVV	
Cable size	More than 1.25mm^2 [AWG16]	0.3～1.25mm^2 [AWG22～16] (0.75～1.25mm^2 [AWG18～16])*1	0.3～1.25mm^2 [AWG22～16] (0.75～1.25mm^2 [AWG18～16])*1
Remarks	—	When 10m [32ft] is exceeded, use cables with the same specification as transmission cables.	Max length : 200m [656ft]

*1 Connected with simple remote controller.

CVVS, MVVS : PVC insulated PVC jacketed shielded control cable
CPEVS : PE insulated PVC jacketed shielded communication cable
CVV : PV insulated PVC sheathed control cable

2-3. System configuration restrictions

2-3-1. Common restrictions for the CITYMULTI system

For each Heat source unit, the maximum connectable quantity of Indoor unit is specified at its Specifications table.

A) 1 Group of Indoor units can have 1-16 Indoor units;
*OA processing unit GUF-RD(H) is considered as Indoor unit.

B) Maximum 2 remote controllers for 1 Group; (MA/ME remote controllers cannot be present together in 1group.)

C) 1 LOSSNAY unit can interlock maximum 16 Indoor units; 1 Indoor unit can interlock only 1 LOSSNAY unit.

D) Maximum 3 System controllers are connectable when connecting to TB3 of the Heat source unit.

E) Maximum 3 System controllers are connectable when connecting to TB7 of the Heat source unit, if the transmission power is supplied by the Heat source unit.

F) 4 System controllers or more are connectable when connecting to TB7 of the Heat source unit, if the transmission power is supplied by the power supply unit PAC-SC51KUA. Details refer to 2-3-3-C.
*System controller connected as described in D) and E) would have a risk that the failure of connected Heat source unit would stop power supply to the System controller.

2-3-2. Ensuring proper communication power for M-NET

In order to ensure proper communication among Heat source unit, Indoor unit, LOSSNAY, and OA processing unit GUF-RD(H), and Controllers, the transmission power situation for the M-NET should be observed. In some cases, Transmission booster should be used. Taking the power consumption of Indoor unit sized P20-P140 as 1, the equivalent power consumption or supply of others are listed at Table 2-3-1 and Table 2-3-2.

Table 2-3-1 The equivalent power consumption

Indoor, OA unit	Indoor unit	BC controller	MA RC. LOSSNAY	ME Remote Contr.	Timers, System Contr.		ON/OFF Contr.	MN Conrerter	
Sized P20-P140 GUF-50, 100	Sized P200,P250	CMB	PAR-21MAA PAC-YT51CRA(B) PAR-FA32MA LGH-RX-E PZ-60DR-E	PAR-F27MEA PAC-SE51CRA PZ-52SF-E	PAC-SC30GRA PAC-SF44SRA PAC-YT34STA AG150A	GB-50A	PAC-YT40ANRA	CMS -MNF-B	CMS -MNG-E
1	7	2	0	1/4	1/2	3	1	1/2	2

*RC : Remote Controller

Table 2-3-2 The equivalent power supply

Transmission Booster	Power supply unit	Expansion controller	BM ADAPTER	Heat source unit	Heat source unit
PAC-SF46EPA	PAC-SC51KUA	PAC-YG50ECA	BAC-HD150	Connector TB3 and TB7 total *	Connector TB7 only
25	5	6	6	32	6

*If PAC-SC51KUA is used to supply power at TB7 side, no power supply need from Heat source unit at TB7, Connector TB3 itself will therefore have 32.

With the equivalent power consumption values in Table 2-3-1 and Table 2-3-2, PAC-SF46EPA can be designed into the air-conditioner system to ensure proper system communication according to 2-3-2-A, B, C.

2-3-2-A) Firstly, count from TB3 at TB3 side the total quantity of Indoor units, OA process units and ME remote controller, Timers and System controllers. If the total quantity reaches 40, a PAC-SF46EPA should be set. In this case, Indoor unit sized P200, 250 is counted as 7 Indoor units, but MA remote controller(s), LOSSNAY, PZ-60DR-E is NOT counted.

2-3-2-B) Secondly, count from TB7 side to TB3 side the total transmission power consumption. If the total power consumption reaches 32, a PAC-SF46EPAshould be set. Yet, if a PAC-SC51KUAis used to supply power at TB7 side, count from TB3 side only.

2-3-2-C) Thirdly, count from TB7 at TB7 side the total transmission power consumption, If the total power consumption reaches 6, a PAC-SF46EPA should be set.

■ System example

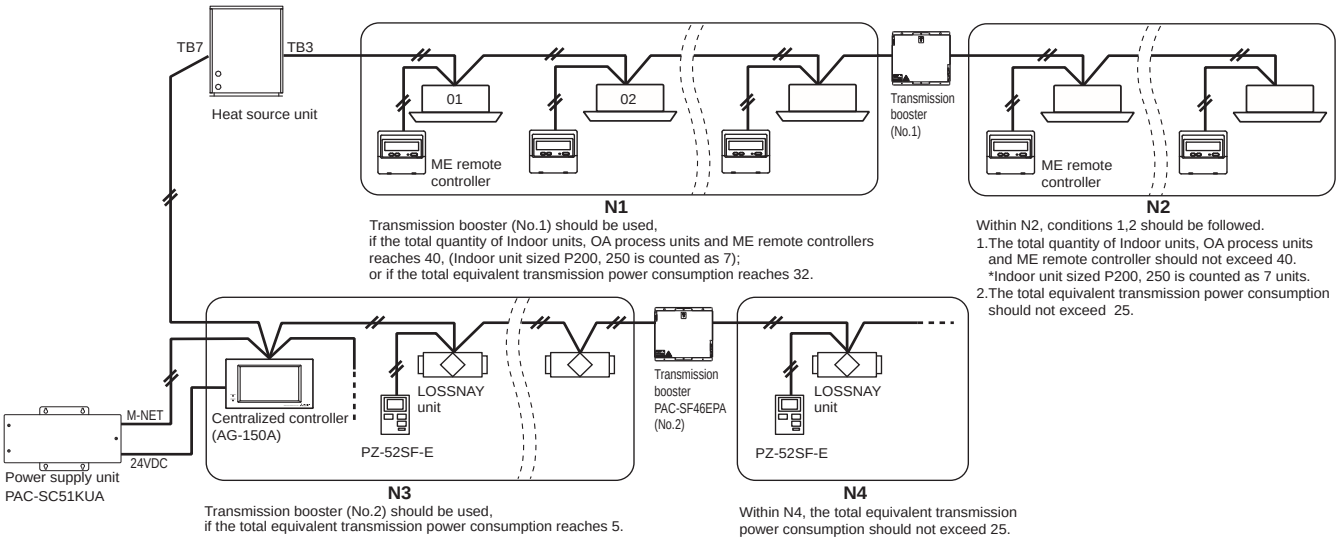

2-3-3. Ensuring proper power supply to System controller

The power to System controller (excluding LMAP02-E) is supplied via M-NET transmission line. M-NET transmission line at TB7 side is called Centralized control transmission line while one at TB3 side is called Indoor-Heat source unit transmission line. There are 3 ways to supply power to the System controller .
A) Connecting to TB3 of the Heat source unit and receiving power from the Heat source unit.
B) Connecting to TB7 of the Heat source unit and receiving power from the Heat source unit.
C) Connecting to TB7 of the Heat source unit but receiving power from power supply unit PAC-SC51KUA.

2-3-3-A. When connecting to TB3 of the Heat source unit and receiving power from the Heat source unit.

Maximum 3 System controllers can be connected to TB3. If there is more than 1 Heat source unit, it is necessary to replace power supply switch connector CN41 with CN40 on one Heat source unit.

Fig. 2-3-3-A

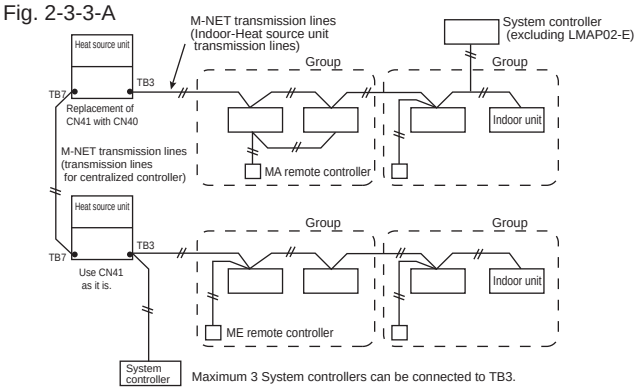

2-3-3-B. When connecting to TB7 of the Heat source unit and receiving power from the Heat source unit.

Maximum 3 System controllers can be connected to TB7 and receiving power from the Heat source unit.
It is necessary to replace power supply switch connector CN41 with CN40 on one Heat source unit.

Fig. 2-3-3-B

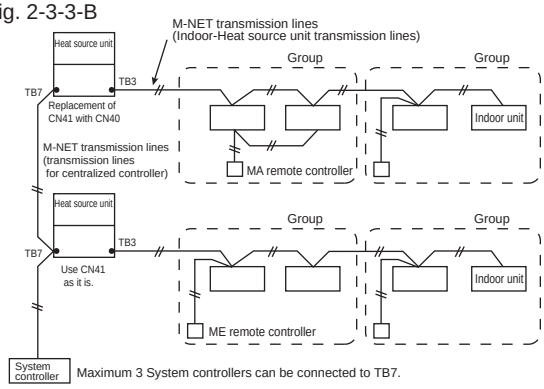

2-3-3-C. When connecting to TB7 of the Heat source unit but receiving power from PAC-SC51KUA.

When using PAC-SC51KUA to supply transmission power, the power supply connector CN41 on the Heat source units should be kept as it is. It is also a factory setting.
1 PAC-SC51KUA supports maximum 1 AG-150A unit due to the limited power 24VDC at its TB3.
However, 1 PAC-SC51KUA supplies transmission power at its TB2 equal to 6 Indoor units, which is referable at Table 2-3-2.
If PZ-52SF-E, Timers, System controller, ON/OFF controller connected to TB7 consume transmission power more than 5 (Indoor units), Transmission booster PAC-SF46EPA is needed. PAC-SF46EPA supplies transmission power equal to 25 Indoor units.

Fig. 2-3-3-C

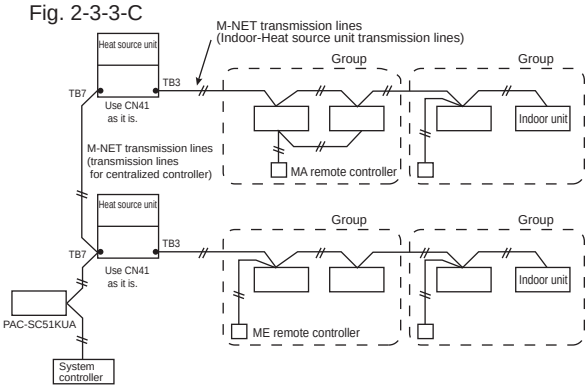

⚠ CAUTION

AG-150A*1 is recommended to connect to TB7 because it performs back-up to a number of data.
In an air conditioner system has more than 1 Heat source units, AG-150A receiving transmission power through TB7 on one of the Heat source units would have a risk that the connected Heat source unit failure would stop power supply to AG-150A, and disrupt the whole system.
When applying apportioned electric power function, AG-150A is necessary to connected to TB7 and has its own power supply unit PAC-SC51KUA.*2
*1: AG-150A is an example model of system controllers.
*2: Power supply unit PAC-SC51KUA is for AG-150A.

2-3-4. Power supply to LM adapter LMAP02-E

1-phase 220-240V AC power supply is needed.
The power supply unit PAC-SC51KUA is not necessary when connecting only the LMAP02-E. Yet, make sure to change the power supply changeover connector CN41 to CN40 on the LM adapter.

2-3-5. Power supply to expansion controller

1-phase 100-240VAC power supply is needed.
The power supply unit PAC-SC51KUA is not necessary.
The expansion controller supplies power through TB3, which equals 6 indoor units. (refer to Table 2-3-2)

2-3-6. Power supply to BM ADAPTER

1-phase 100-240VAC power supply is needed.
The power supply unit PAC-SC51KUA is not necessary when only BM ADAPTER is connected.
Yet, make sure to move the power jumper from CN41 to CN40 on the BM ADAPTER.

2-4. Address setting

2-4-1. Switch operation

In order to constitute CITY MULTI in a complete system, switch operation for setting the unit address No. and connection No. is required.

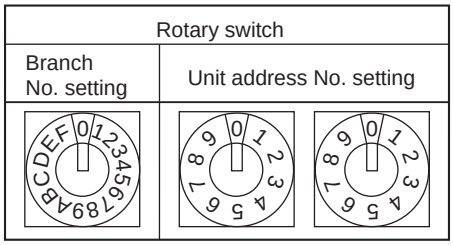

① Address No. of Heat source unit, indoor unit and remote controller.
The address No. is set at the address setting board.
In the case of WR2 system, it is necessary to set the same No. at the branch No. switch of indoor unit as that of the BC controller connected. (When connecting two or more branches, use the lowest branch No.)

② Caution for switch operations

- Be sure to shut off power source before switch setting. If operated with power source on, switch can not operate properly.
- No units with identical unit address shall exist in one whole air conditioner system. If set erroneously, the system can not operate.

③ MA remote controller

- When connecting only one remote controller to one group, it is always the main remote controller.
  When connecting two remote controllers to one group, set one remote controller as the main remote controller and the other as the sub remote controller.
- The factory setting is "Main".

PAR-21MAA
The MA remote controller does not have the switches listed above.
Refer to the installation manual for the function setting.

PAC-YT51CRB

Setting the dip switches

There are switches on the front of the remote controller. Remote controller Main/Sub and other function settings are performed using these switches. Ordinarily, only change the Main/Sub setting of SW1.
(The factory settings are all "ON".)

SW No	SW contents Main	ON	OFF	Comment
1	Remote controller Main/Sub setting	Main	Sub	Set one of the two remote controllers at one group to "Main"
2	Temperature display units setting	Celsius	Fahrenheit	When the temperature is displayed in [Fahrenheit], set to "No".
3	Cooling/heating display in AUTO mode	Yes	No	When you do not want to display "Cooling" and "Heating" in the Auto mode, set to "No".

System WR2

2-4-2. Rule of setting address

Unit		Address setting	Example	Note
Indoor unit		01 ~ 50	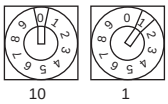	Use the most recent address within the same group of indoor units. Make the indoor units address connected to the BC controller (Sub) larger than the indoor units address connected to the BC controller (Main). If applicable, set the sub BC controllers in an PQRY system in the following order: (1) Indoor unit to be connected to the BC controller (Main) (2) Indoor unit to be connected to the BC controller (No.1 Sub) (3) Indoor unit to be connected to the BC controller (No.2 Sub) Set the address so that (1)<(2)<(3)
Heat source unit		51 ~ 99, 100	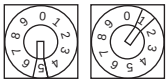	The smallest address of indoor unit in same refrigerant system + 50 ∗The address automatically becomes "100" if it is set as "01~ 50"
BC controller (Main)		52 ~ 99, 100	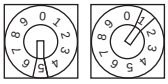	The address of Heat source unit + 1 ∗Please reset another address between 01 and 50 when two addresses overlap. ∗The address automatically becomes "100" if it is set as "01~ 50"
BC controller (Sub)		52 ~ 99, 100	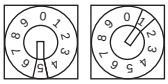	Lowest address within the indoor units connected to the BC controller (Sub) plus 50.
Local remote controller	ME, LOSSNAY Remote controller (Main)	101 ~ 150	1 Fixed 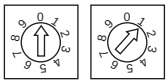	The smallest address of indoor unit in the group + 100 ∗The place of "100" is fixed to "1"
Local remote controller	ME, LOSSNAY Remote controller (Sub)	151 ~ 199, 200	1 Fixed 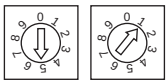	The address of main remote controller + 50 ∗The address automatically becomes "200" if it is set as "00"
System controller	Group remote controller	201 ~ 250	2 Fixed 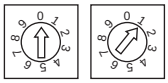	The smallest group No. to be managed + 200
System controller	System remote controller	000, 201 ~ 250	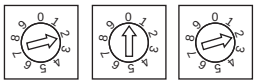	
System controller	ON/OFF remote controller	000, 201 ~ 250	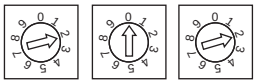	The smallest group No. to be managed + 200 ∗The smallest group No. to be managed is changeable.
System controller	AG-150A GB-50A	000, 201 ~ 250	0 0 0 100 10 1	
System controller	PAC-YG50ECA	000, 201 ~ 250	0 0 0 100 10 1	∗Settings are made on the initial screen of AG-150A.
System controller	BAC-HD150	000, 201 ~ 250	0 0 0 100 10 1	∗Settings are made with setting tool of BM ADAPTER.
System controller	LMAP02-E	201 ~ 250	2 Fixed 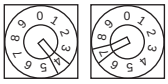	

∗Heat source unit here mentioned includes PQHY, PQRY.

System WR2

2-4-3. System examples

Factory setting

Original switch setting of the heat sources, indoors, controllers and LMAP at shipment is as follows.

- Heat source unit : Address: 00, CN41: U (Jumper), DipSW2-1: OFF
- Indoor unit : Address: 00
- BC controller : Address: 00
- ME remote controller : Address: 101
- LMAP : Address: 247, CN41: U (Jumper), DipSW1-2: OFF

Setting at the site

- DipSW2-1(Heat source) : When the System Controller is used, all the Dip SW2-1 at the heat source units should be set to "ON". * Dip SW2-1 remains OFF when only LMAP03U is used.
- DipSW1-2(LMAP) : When the LMAP is used together with System Controller, DipSW1-2 at the LMAP should be set to "ON".
- CN40/CN41 : Change jumper from CN41 to CN 40 at heat source control board will activate central transmission power supply to TB7;
  (Change jumper at only one heat source unit when activating the transmission power supply without using a power supply unit.)
  Change jumper from CN41 to CN 40 at LMAP will activate transmission power supply to LMAP itself;
  Power supply unit is recommended to use for a system having more than 1 heat source unit, because the central transmission power supply from TB7 of one of heat source units is risking that the heat source unit failure may let down the whole central control system.

System WR2

2-4-3-1. MA remote controller, Single-refrigerant-system, No System Controller

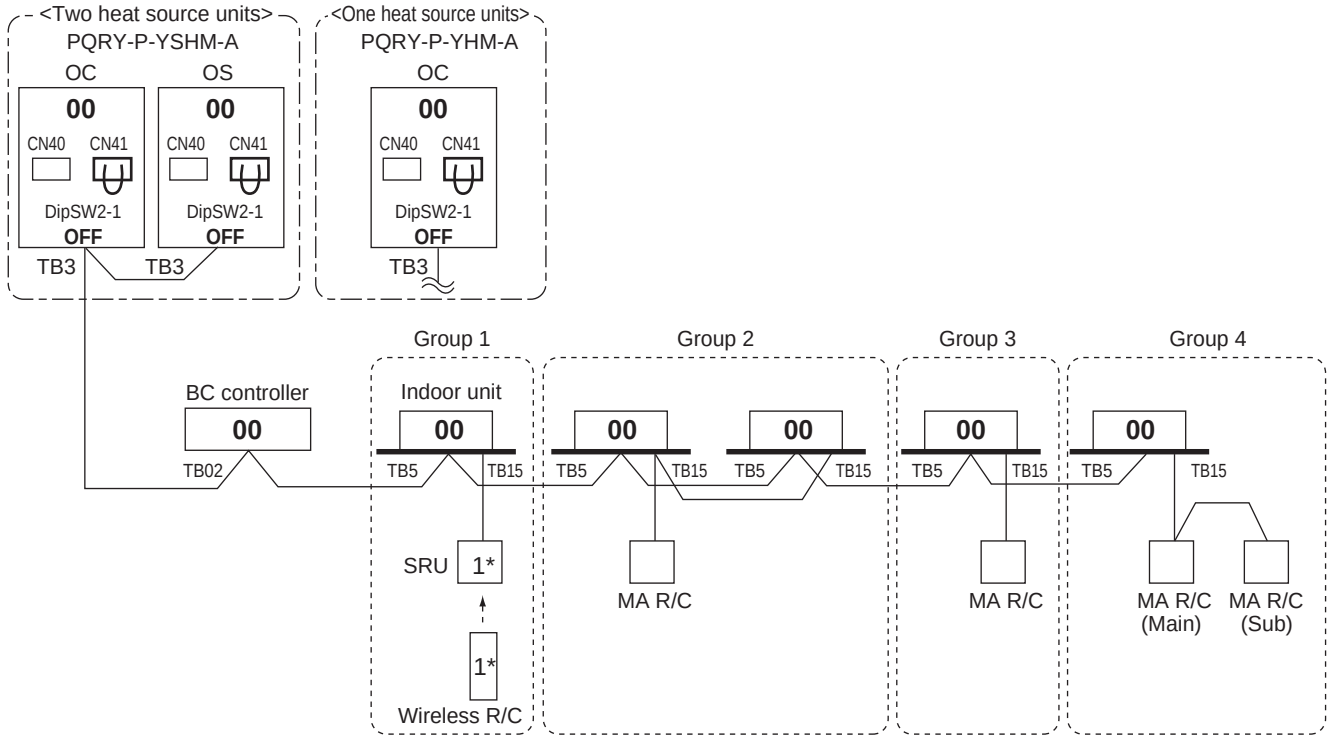

*1 For Wireless R/C and Signal receiver unit (SRU), channel 1, 2 and 3 are selectable and should be set to same channel.

NOTE:

1. Heat source units OC and OS in one refrigerant circuit system are automatically detected.
   OC and OS are ranked in descending order of capacity. If units are the same capacity, they are ranked in ascending order of their address.
2. No address setting is needed.
3. For a system having more than 32 indoor unit (P15-P140), confirm the need of Booster at **2-3 "System configuration restrictions".**
4. Indoor units should be set with a branch number.
5. Address setting is required if a sub BC controller is connected.

2-4-3-2. MA remote controller, Single-refrigerant-system, System Controller

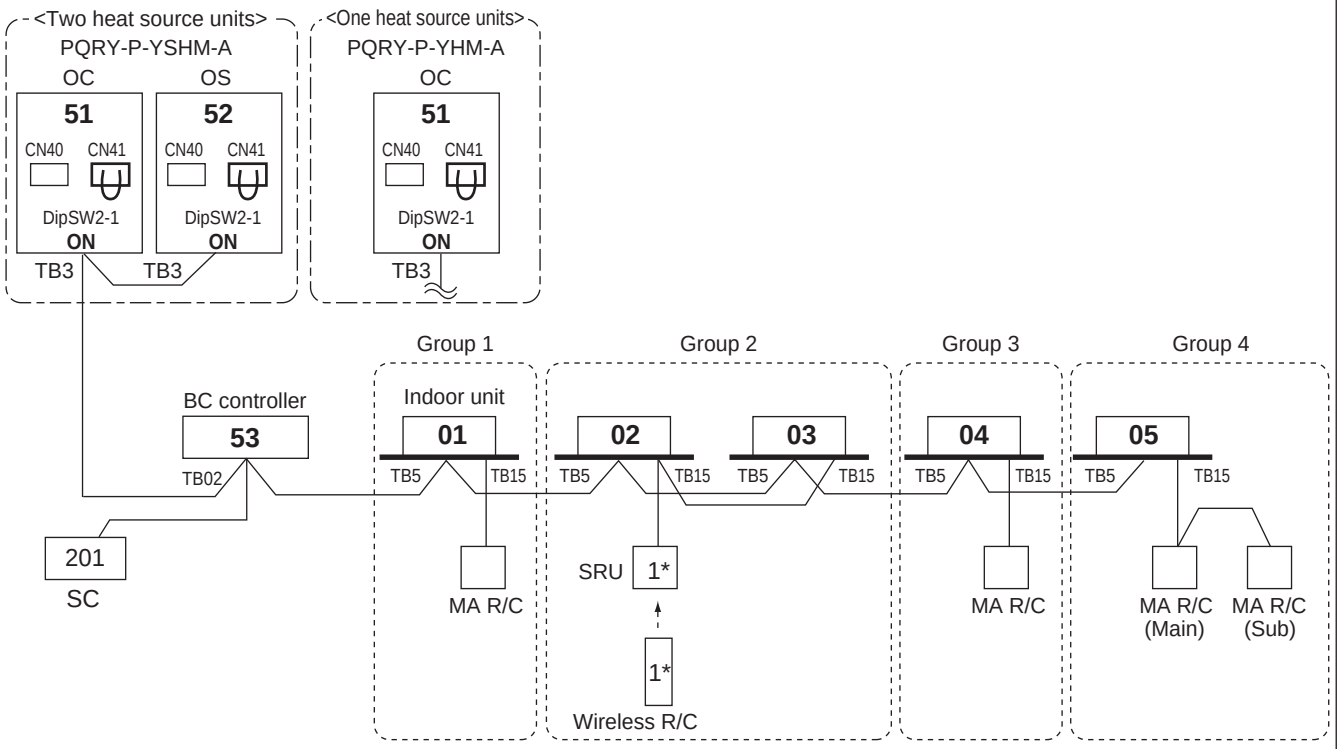

*1 For Wireless R/C and Signal receiver unit (SRU), channel 1, 2 and 3 are selectable and should be set to same channel.

*SC can be connected to TB3 side or TB7 side;
Should SC connected to TB7 side, change Jumper from CN41 to CN40 at the Heat source unit module so as to supply power to the SC.

NOTE:
1. Heat source units OC and OS in one refrigerant circuit system are automatically detected.
   OC and OS are ranked in descending order of capacity. If units are the same capacity, they are ranked in ascending order of their address.
2. Address should be set to Indoor units and central controller.
3. For a system having more than 32 indoor unit (P15-P140), confirm the need of Booster at **2-3 "System configuration restrictions".**
4. Indoor units should be set with a branch number.

System WR2

2-4-3-3. MA remote controller, Multi-refrigerant-system, System Controller at TB7/TB3 side, Booster for long M-NET wiring

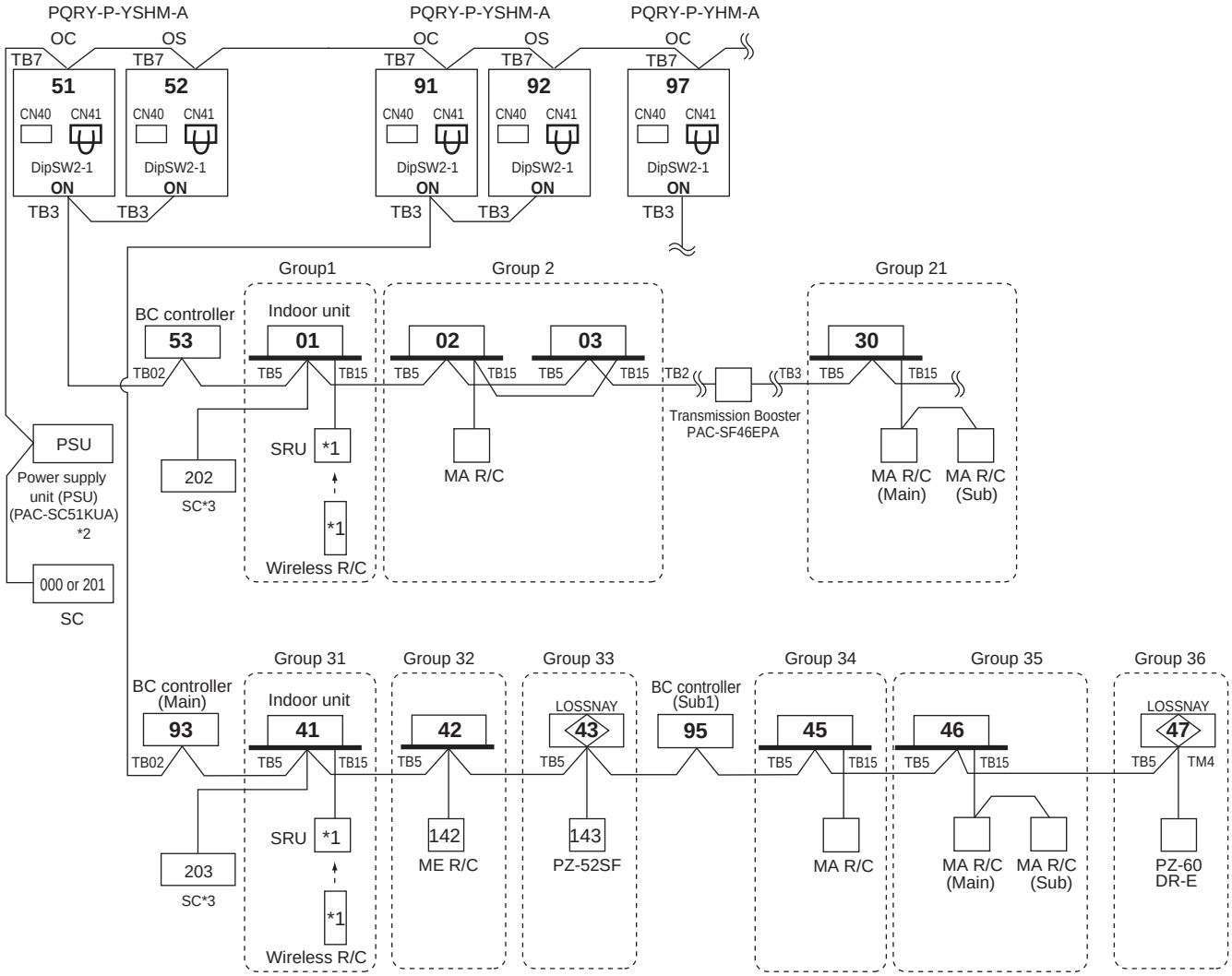

*1 For Wireless R/C and Signal receiver unit (SRU), channel 1, 2 and 3 are selectable and should be set to same channel

*2 System controller should connect to TB7 at the Heat source unit and use power supply unit together in Multi-Refrigerant-System. For AG-150A, 24VDC should be used with the PAC-SC51KUA.

*3 When multiple system controllers are connected in the system, set the controller with more functions than others as a "main" controller and others as "sub".
Make the setting to only one of the system controllers for "prohibition of operation from local remote controller".

NOTE:

1. Heat source units OC and OS in one refrigerant circuit system are automatically detected.
   OC and OS are ranked in descending order of capacity. If units are the same capacity, they are ranked in ascending order of their address.
2. Address should be set to Indoor units, LOSSNAY and system controller.
3. M-NET power is supplied by the Heat source unit at TB3, while Indoor unit and ME remote controller consume the M-NET power for transmission use. The power balance is needed to consider for long M-NET wiring. Details refer to **2-3 "System configuration restrictions".**
4. Indoor units should be set with a branch number.
5. Assign an address to each of the sub BC controllers which equals the sum of the smallest address of the indoor units that are connected to each sub BC controller and 50.

2-4-3-4. ME remote controller, Single-refrigerant-system, No system controller

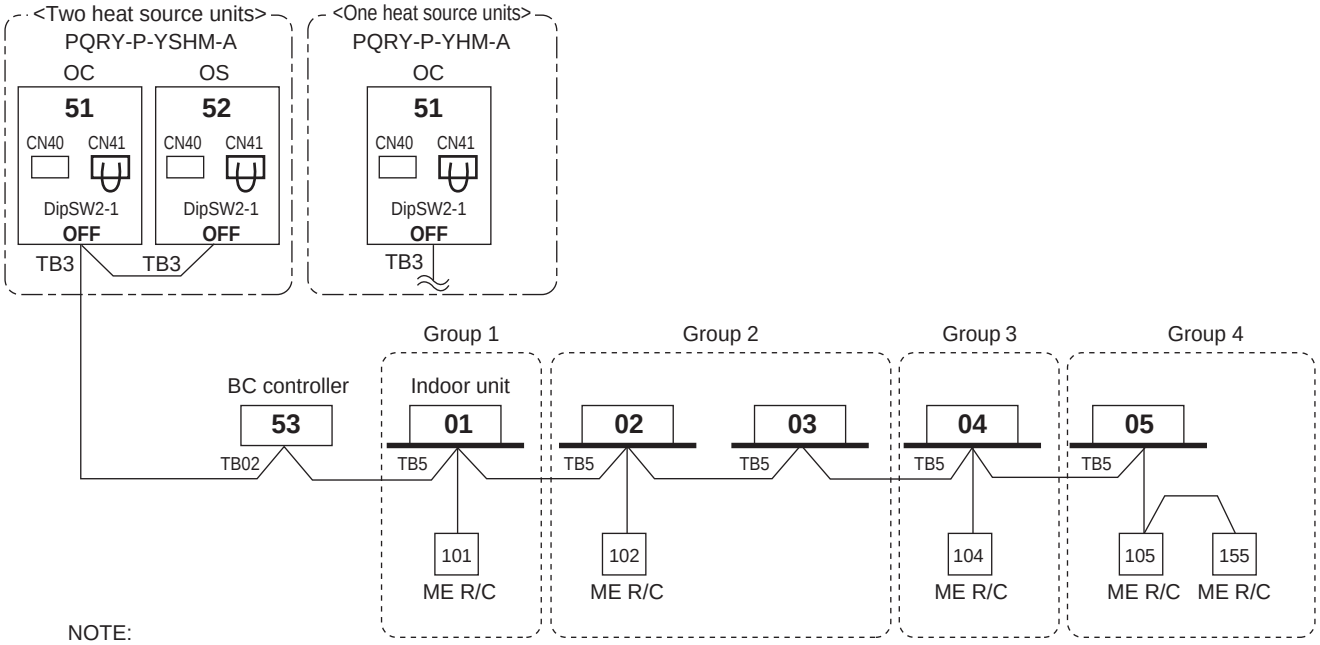

NOTE:

1. Heat source units OC and OS in one refrigerant circuit system are automatically detected.
   OC and OS are ranked in descending order of capacity. If units are the same capacity, they are ranked in ascending order of their address.
2. Address should be set to Indoor units, system controller and ME remote controllers.
3. M-NET power is supplied by the Heat source unit at TB3, while Indoor unit and ME RC consume the M-NET power for transmission use. The power balance is needed to consider for long M-NET wiring. Details refer to **2-3 "System configuration restrictions".**
4. Indoor units should be set with a branch number.

2-4-3-5. ME remote controller, Single-refrigerant-system, System controller, LOSSNAY

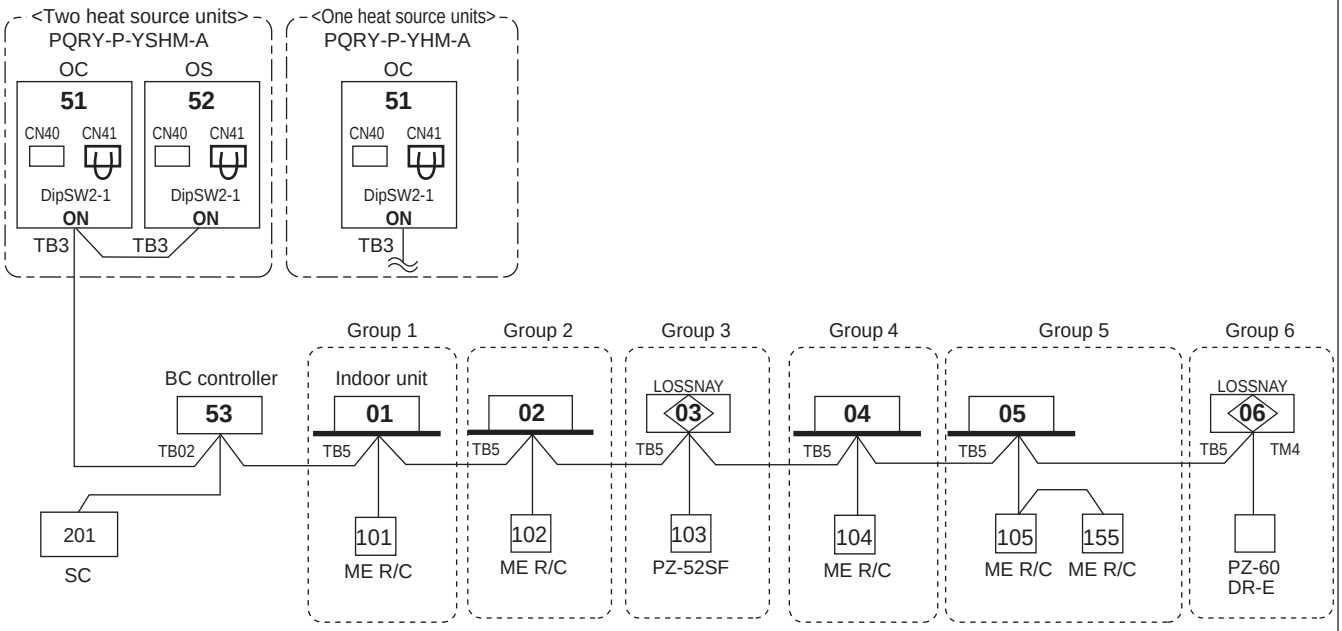

*SC can be connected to TB3 side or TB7 side;
Should SC connected to TB7 side, change Jumper from CN41 to CN40 at the Heat source unit module so as to supply power to the SC.

NOTE:

1. Heat source units OC and OS in one refrigerant circuit system are automatically detected.
   OC and OS are ranked in descending order of capacity. If units are the same capacity, they are ranked in ascending order of their address.
2. Address should be set to Indoor units, LOSSNAY central controller, ME remote controllers.
3. For a system having more than 32 indoor unit (P15-P140), confirm the need of Booster at **2-3 "System configuration restrictions".**
4. Indoor units should be set with a branch number.

2-4-3-6. ME remote controller, Multi-refrigerant-system, System Controller at TB 7side, LOSSNAY, Booster for long M-NET wiring

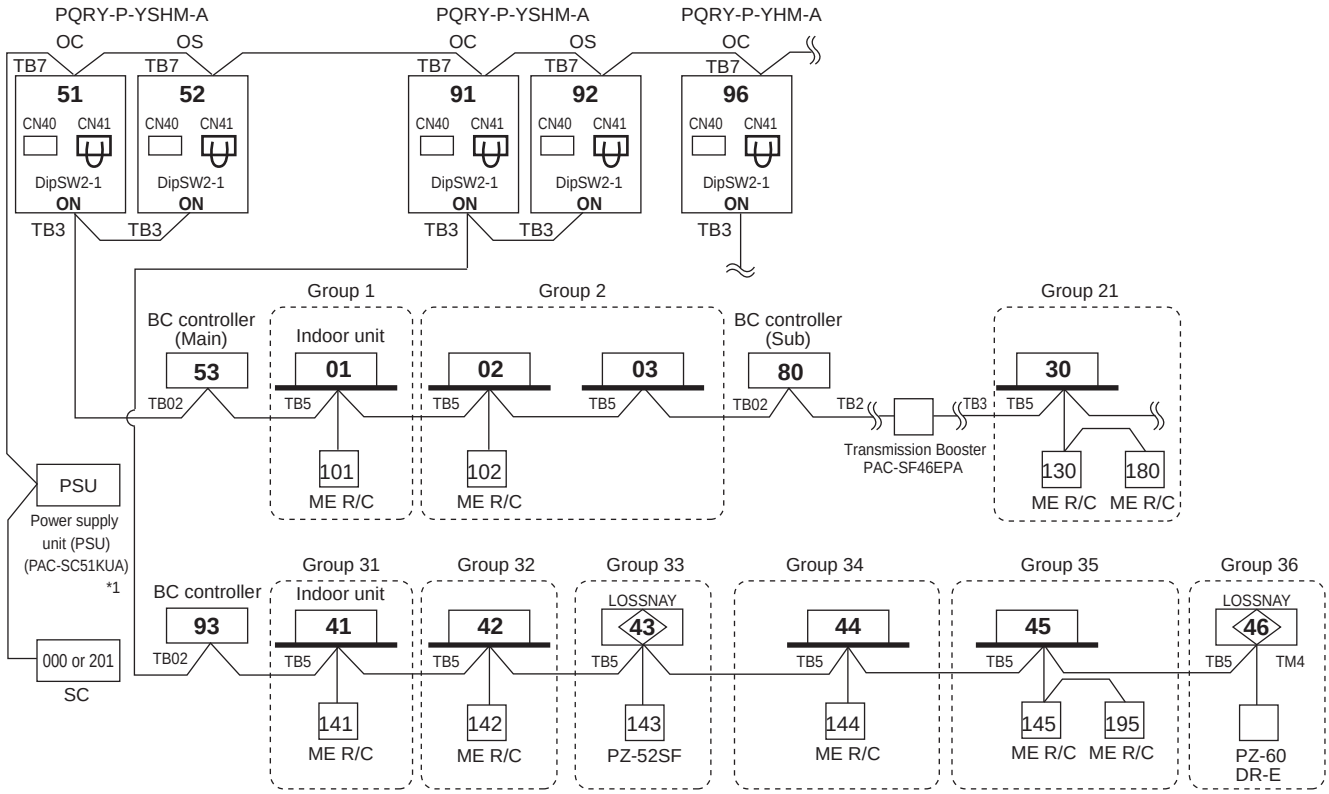

*1 System controller should connect to TB7 at the Heat source unit and use power supply unit together in Multi-Refrigerant-System.
For AG-150A, 24VDC should be used with the PAC-SC51KUA.

NOTE:

1. Heat source units OC and OS in one refrigerant circuit system are automatically detected.
   OC and OS are ranked in descending order of capacity. If units are the same capacity, they are ranked in ascending order of their address.
2. M-NET power is supplied by the Heat source unit at TB3, while Indoor unit and ME RC consume the M-NET power for transmission use. The power balance is needed to consider for long M-NET wiring. Details refer to **2-3 "System configuration restrictions".**
3. Indoor units should be set with a branch number.
4. Assign an address to each of the sub BC controllers which equals the sum of the smallest address of the indoor units that are connected to each sub BC controller and 50.
   When the address assigned to sub BC controller overlaps those of any other units including heat source units (OC/OS) or main BC controller, sub BC controller will be given priority to have the address.

2-4-3-7. Example : BC, BC sub

NOTE
- Indoor units should be set with a branch number.
- BC (main) address = O/U address + 1
- BC (sub) address = Lowest address within the indoor units connected to the BC controller (sub) + 50
- If applicable, set the sub BC controllers in an PQRY system in the following order:
  (1) Indoor unit to be connected to the BC controller (Main)
  (2) Indoor unit to be connected to the BC controller (No.1 Sub)
  (3) Indoor unit to be connected to the BC controller (No.2 Sub)
  Set the address so that (1)<(2)<(3)

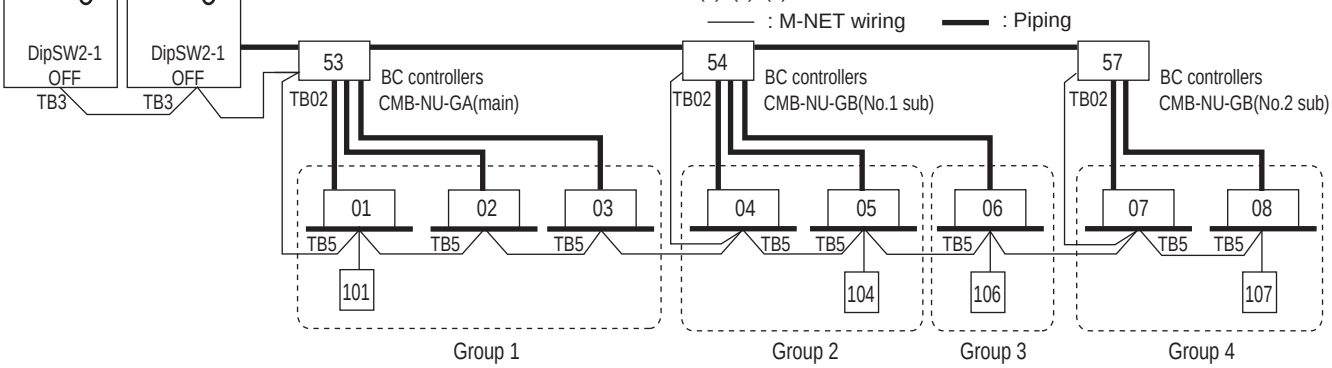

System WR2

2-4-3-8. TG-2000A(*1)+AG-150A(*2)

AG-150A can control max. 50 indoor units;
TG-2000A can control max. 40 AG-150A;*3
TG-2000A can control max. 2000 indoor units.

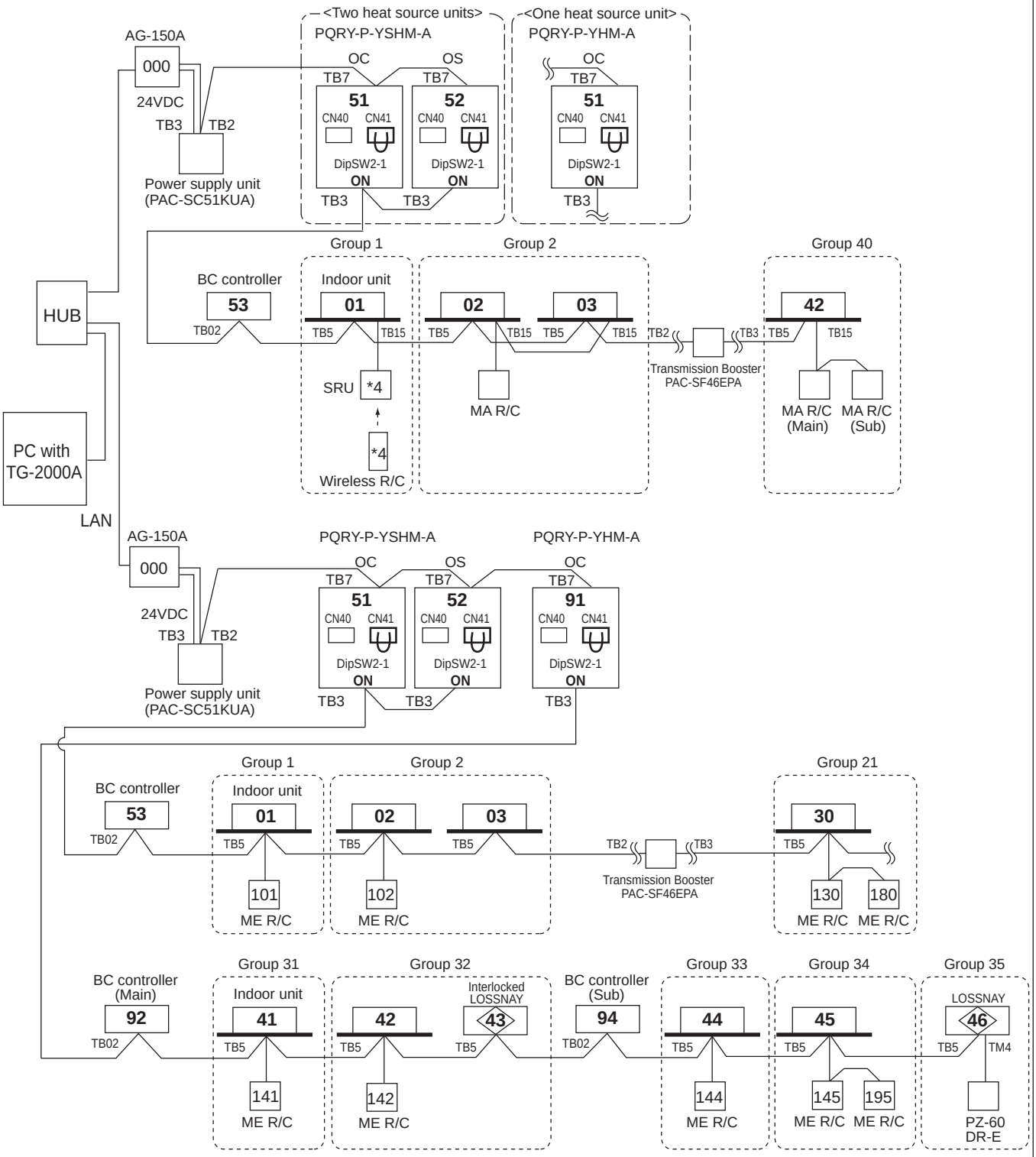

*1 TG-2000A (Ver.5.5 or later) supports AG-150A (Ver.1series).
TG-2000A (Ver. 6.1 or later) supports AG-150A (Ver. 2.1 or later) connected with the expansion controller (EC).
*2 AG-150A (Ver.1series) does not support the expansion controller (EC).
*3 When AG-150A connected with the expansion controller (EC) is connected, the number of EC will be the maximum controllable number.
TG-2000A can control up to 40 EC or AG-150A without EC connection.
*4 For Wireless R/C and Signal receiver unit (SRU), channel 1, 2 and 3 are selectable and should be set to same channel.

2-4-3-9. AG-150A+PAC-YG50ECA (Expansion controller)

AG-150A can control max. 150 indoor units/ via expansion controllers.

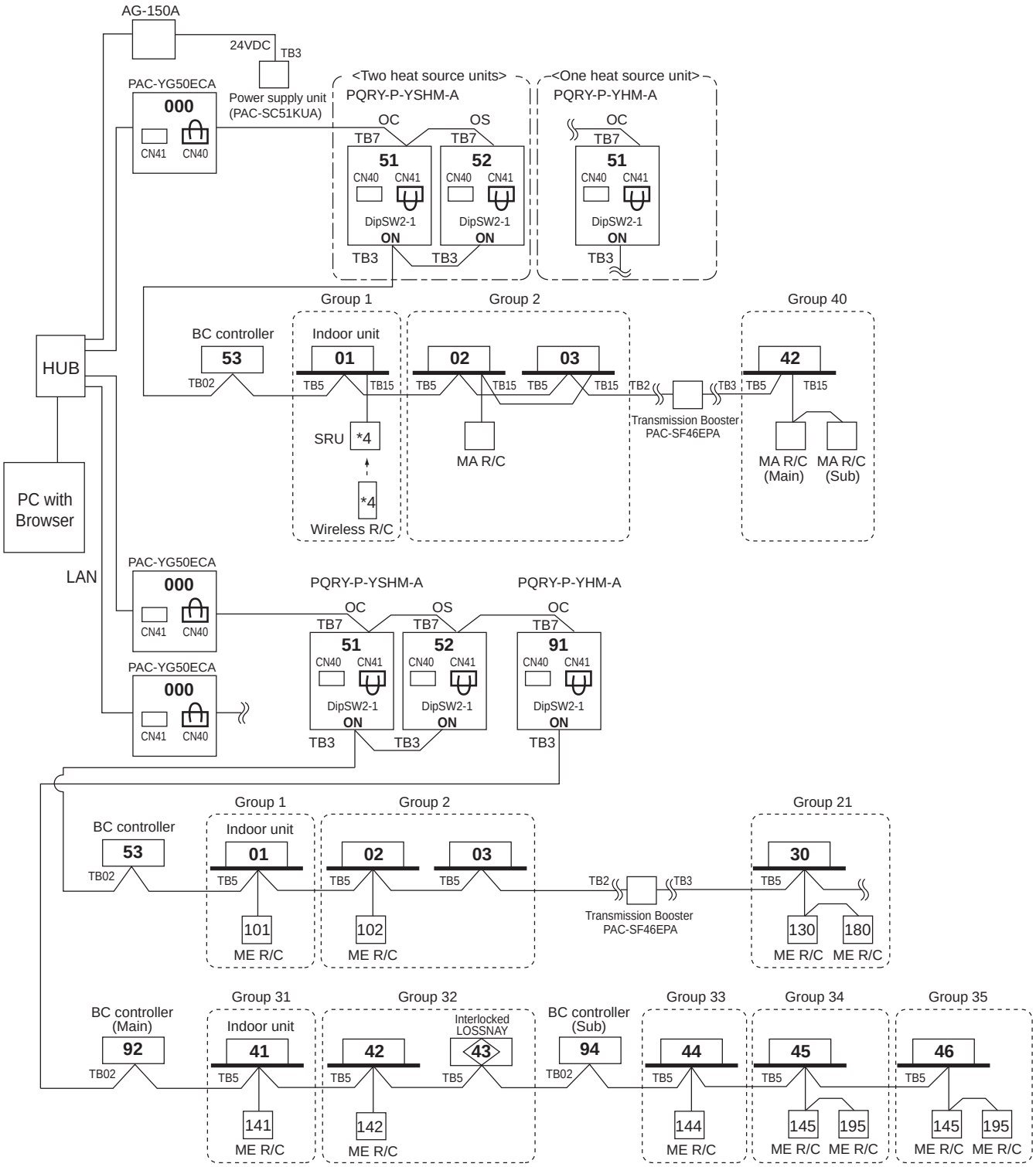

NOTE

- When connecting AG-150A to PAC-YG50ECA, TB2 for power supply unit does not need to be connected to AG-150A.

*1 For Wireless R/C and Signal receiver unit (SRU), channel 1, 2 and 3 are selectable and should be set to same channel.

*2 AG-150A (Ver.1series) does not support the expansion controller (EC).

2-4-3-10. LMAP

LMAP can transmission for max. 50 indoor units;
If system controller (SC) is used, DipSW1-2 at LMAP and DipSW2-1 at Heat source unit should set to "ON".
Change Jumper from CN41 to CN40 to activate power supply to LMAP itself for those LMAP connected without system controller (SC).

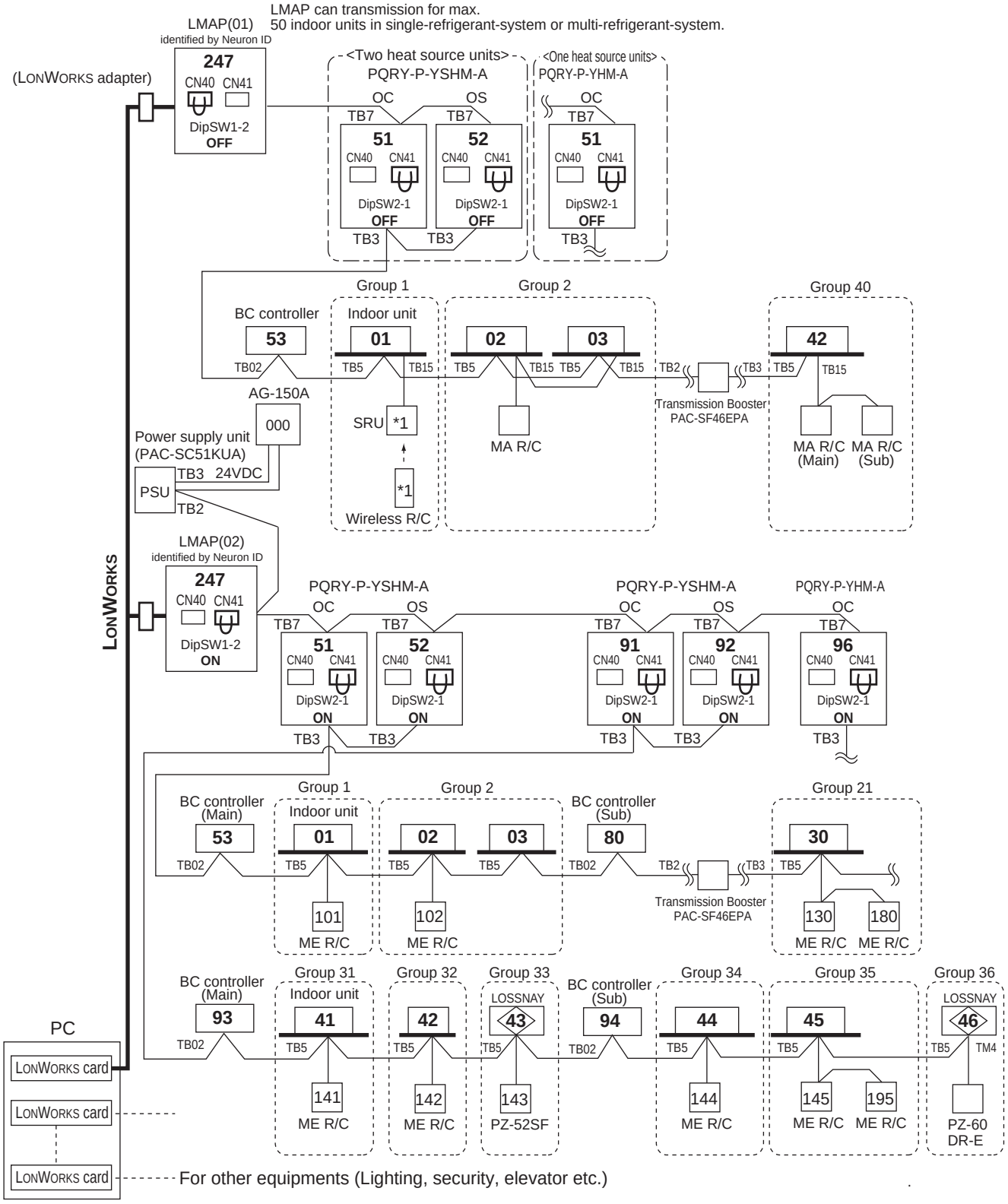

*1 For Wireless R/C and Signal receiver unit (SRU), channel 1, 2 and 3 are selectable and should be set to same channel

2-4-3-11. BM ADAPTER

BM ADAPTER can transmission for max. 50 indoor units;
Change Jumper from CN41 to CN40 to activate power supply to BM ADAPTER itself for those BM ADAPTER connected without the power supply unit.

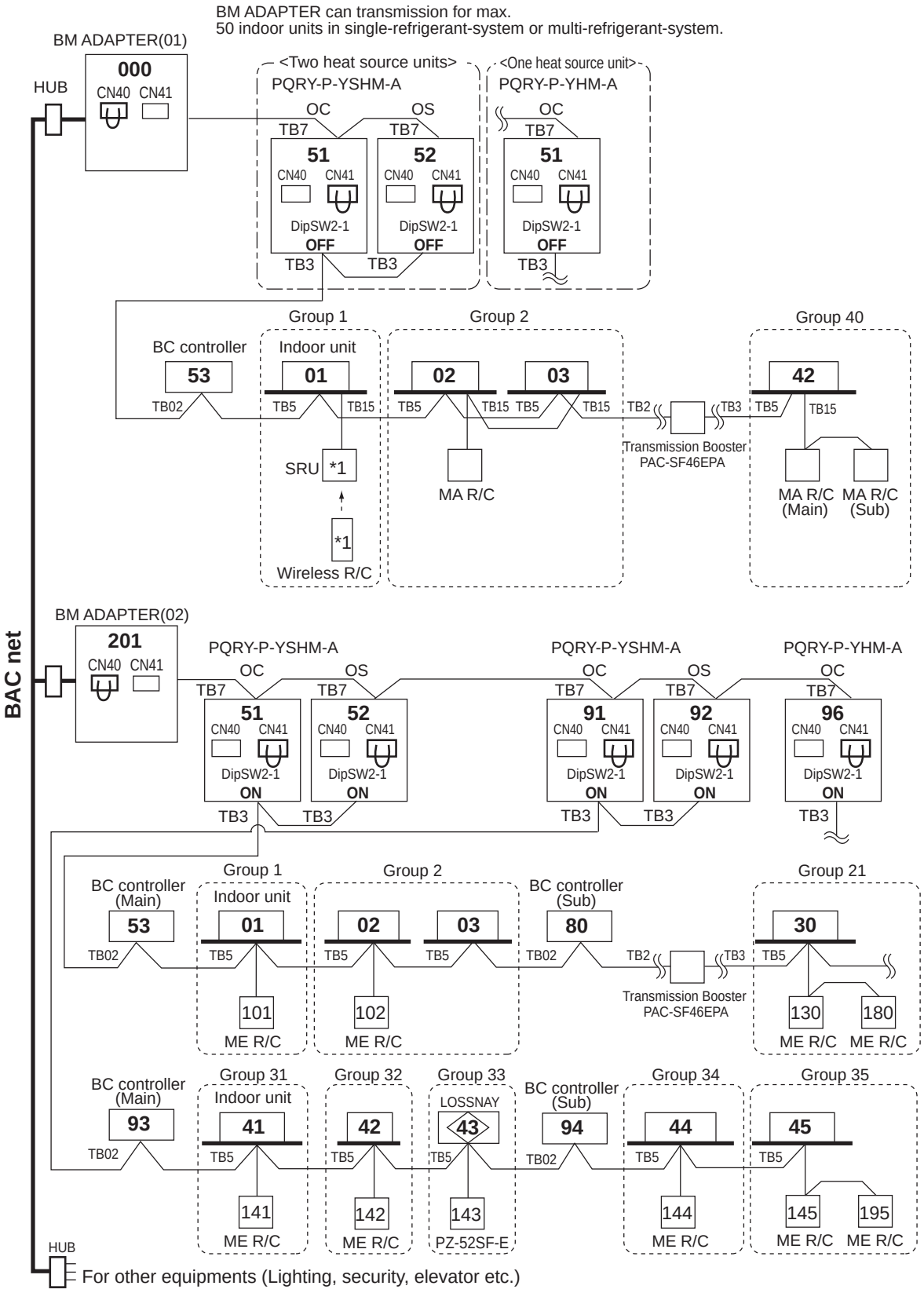

*1 For Wireless R/C and Signal receiver unit (SRU), channel 1, 2 and 3 are selectable and should be set to same channel.

System WR2

2-4-3-12. BM ADAPTER+PAC-YG50ECA (Expansion controller)

BM ADAPTER(*1) can transmission for max. 150 indoor units/via expansion controllers (PAC-YG50ECA).

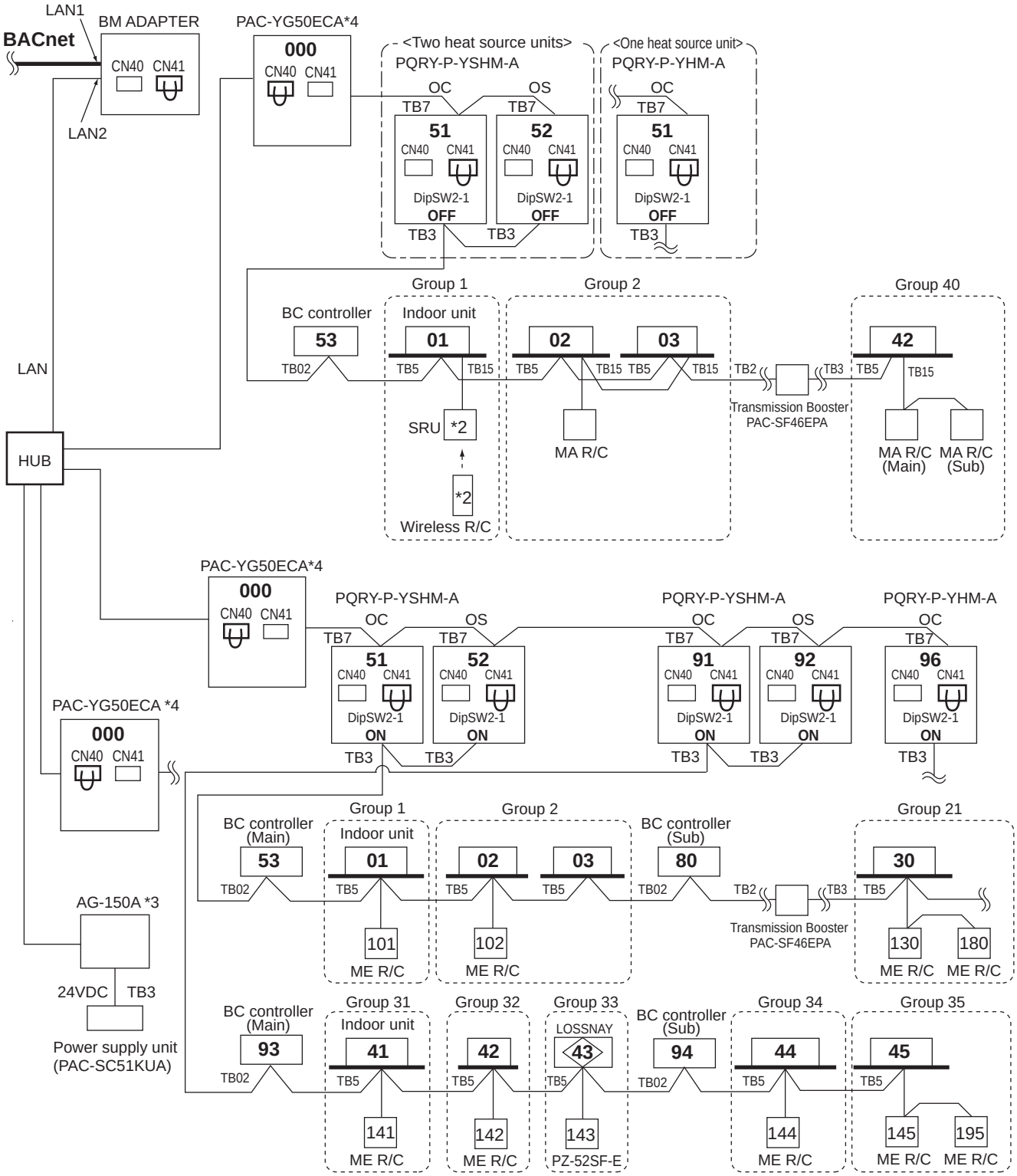

NOTE

•It is not necessary to connect the M-NET transmission line to the TB3 on BM ADAPTER. Leave the power jumper of BM ADAPTER connected to CN41.

*1 BM ADAPTER (Ver.2.00 or later) supports the expansion controller.
*2 For Wireless R/C and Signal receiver unit (SRU), channel 1, 2 and 3 are selectable and should be set to same channel.
*3 AG-150A (Ver.2.30 or later) supportsthe BM ADAPTER.
*4 PAC-YG50ECA (Ver.1.30 or later) supports the BM ADAPTER.

3. Piping Design

3-1. R410A Piping material

Refrigerant pipe for CITY MULTI shall be made of phosphorus deoxidized copper, and has two types.
A. Type-O : Soft copper pipe (annealed copper pipe), can be easily bent with human's hand.
B. Type-1/2H pipe : Hard copper pipe (Straight pipe), being stronger than Type-O pipe of the same radical thickness.

The maximum operation pressure of R410A air conditioner is 4.30 MPa [623psi]. The refrigerant piping should ensure the safety under the maximum operation pressure. MITSUBISHI ELECTRIC recommends pipe size as Table 3-1, or You shall follow the local industrial standard. Pipes of radical thickness 0.7mm or less shall not be used.

Table 3-1. Copper pipe size and radial thickness for R410A CITY MULTI.

Size (mm)	Size (inch)	Radial thickness (mm)	Radial thickness (mil)	Pipe type
ø6.35	ø1/4"	0.8	[32]	Type-O
ø9.52	ø3/8"	0.8	[32]	Type-O
ø12.7	ø1/2"	0.8	[32]	Type-O
ø15.88	ø5/8"	1.0	[40]	Type-O
ø19.05	ø3/4"	1.2	[48]	Type-O
ø19.05	ø3/4"	1.0	[40]	Type-1/2H or H
ø22.2	ø7/8"	1.0	[40]	Type-1/2H or H
ø25.4	ø1"	1.0	[40]	Type-1/2H or H
ø28.58	ø1-1/8"	1.0	[40]	Type-1/2H or H
ø31.75	ø1-1/4"	1.1	[44]	Type-1/2H or H
ø34.93	ø1-3/8"	1.2	[48]	Type-1/2H or H
ø41.28	ø1-5/8"	1.4	[56]	Type-1/2H or H

* For pipe sized ø19.05 (3/4") for R410A air conditioner, choice of pipe type is up to you.
* The figures in the radial thickness column are based on the Japanese standards and provided only as a reference. Use pipes that meet the local standards.

Flare

Due to the relative higher operation pressure of R410A compared to R22, the flare connection should follow dimensions mentioned below so as to achieve enough the air-tightness.

Flare pipe	Pipe size	A (For R410A)	(mm[in.])
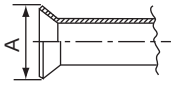	ø6.35 [1/4"]	9.1	
	ø9.52 [3/8"]	13.2	
	ø12.70 [1/2"]	16.6	
	ø15.88 [5/8"]	19.7	
	ø19.05 [3/4"]	24.0	

Flare nut	Pipe size	B (For R410A)	(mm[in.])
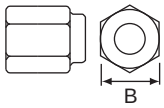	ø6.35 [1/4"]	17.0	
	ø9.52 [3/8"]	22.0	
	ø12.70 [1/2"]	26.0	
	ø15.88 [5/8"]	29.0	
	ø19.05 [3/4"]	36.0	

System WR2

3-2. Piping Design

3-2-1. PQRY-P200-300YHM Piping
IF 16 ports or less are in use, I.e., if only one BC controller is in use with no sub BC controller

Note1. No Header usable on PQRY system.
Note2. Indoor unit sized P100-P250 should be connected to BC controller via Y shape joint CMY-R160-J1 ;
Note3. Indoor unit sized P100-P250 does NOT share BC controller ports with other Indoor units ;
Note4. As bents cause pressure loss on transportation of refrigerant, fewer bents design is better ;
Piping length needs to consider the actual length and equivalent length which bents are counted.
Equivalent piping length (m)=Actual piping length+"M" x Quantity of bent.
Note5. Set DIP-SW 4-6 to ON of BC controller, in case of connected Indoor unit sized P100-P140 with 2 ports.
Note6. It is also possible to connect Indoor unit sized P100-P140 with 1 port (set DIP-SW 4-6 to OFF).
However, the cooling capacity decreases a little (For details, refer to the chapter HEAT SOURCE UNITS, WR2 SERIES, 6-4. Correction by port counts of the BC controller).
Note7. Individual indoor units grouped together to connect to the BC controller via one port cannot operate individually in heating and cooling modes at the same time. I.e., they must all function in either heating or cooling together.
Note8. Indoor capactiy is described as its model size. For example, PEFY-P63VML-E, its capacity is P63.
Note9. Total down-stream Indoor capacity is the summary of the model size of Indoors down-stream.
For example, PEFY-P63VML-E + PEFY-P32VML-E : Total Indoor capacity = P63 + P32 = P95.

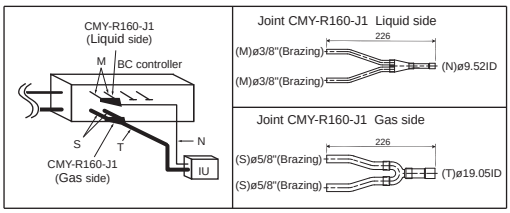

Fig. 3-2-1AA

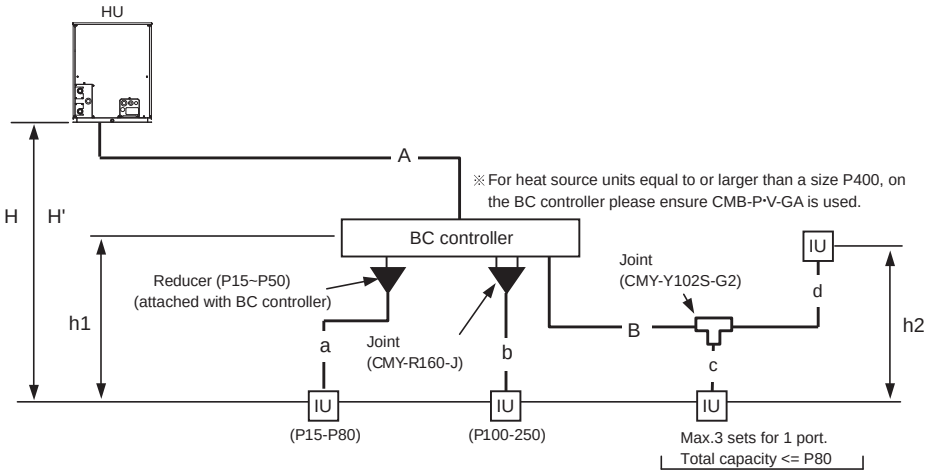

Fig. 3-2-1A Piping scheme

Table 3-2-1-1. Piping length limitation **(m [ft.])**

Item	Piping in the figure	Max. length	Max. equivalent length
Total piping length	A+B+a+b+c+d	*1	-
Farthest IU from HU	A+B+d	165 [541']	190 [623']
Distance between HU and BC	A	110 [360'] *1	110 [360'] *1
Farthest IU from BC controller	B+d	40 [131'] *2*3	40 [131'] *3
Heignt between HU and IU (HU above IU)	H	50 [164'] *5	-
Heignt between HU and IU (HU under IU)	H'	40 [131'] *6	-
Height between IU and BC	h1	15 [49'] (10 [32']) *4	-
Height between IU and IU	h2	15 [49'] (10 [32']) *4	-

HU : Heat source Unit ; IU : Indoor Unit ; BC : BC controller
*1. Refer to the section 3-2-4.
*2. Details refer to Fig.3-2-1-1
*3. Farthest Indoor from BC controller "B+d" can exceed 40m till 60m if no Indoor sized P200, P250 connected. Details refer to Fig.3-2-1-1
*4. Distance of Indoor sized P200, P250 from BC must be less than 10m, if any.

Table3-2-1-2. Bent equivalent length "M"

Heat source Model	M (m/bent [ft./bent])
P200YHM	0.35 [1.15']
P250YHM	0.42 [1.38']
P300YHM	0.42 [1.38']

Fig. 3-2-1-1 Piping length and height between IU and BC controller

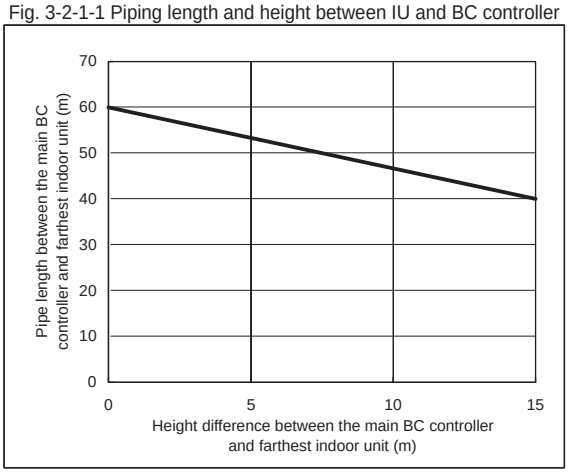

Table3-2-1-3. Piping "A"size selection rule **(mm [in.])**

Heat source Model	Pipe(High pressure)	Pipe(Low pressure)
P200YHM	ø15.88 [5/8"]	ø19.05 [3/4"]
P250YHM	ø19.05 [3/4"]	ø22.20 [7/8"]
P300YHM	ø19.05 [3/4"]	ø22.20 [7/8"]

Table3-2-1-4. Piping "B" size seleciton rule **(mm [in.])**

Total down-stream Indoor capacity	Pipe(Liquid)	Pipe(Gas)
P140 or less	ø9.52 [3/8"]	ø15.88 [5/8"]

Table3-2-1-5. Piping "a", "b", "c", "d" size selection rule **(mm [in.])**

Indoor Unit size	Pipe(Lequid)	Pipe(Gas)
P15 to P50, GUF-50RD(H)	ø6.35 [1/4"]	ø12.70 [1/2"]
P63 to P140, GUF-100RD(H)	ø9.52 [3/8"]	ø15.88 [5/8"]
P200	ø9.52 [3/8"]	ø19.05 [3/4"]
P250	ø9.52 [3/8"]	ø22.20 [7/8"]

3-2-2. IF more than 16 ports are in use, or if there is more than one BC controller in use for one Heat source unit

Note1. No Header usable on PQRY system.
Note2. Indoor unit sized P100-P250 should be connected to BC controller via Y shape joint CMY-R160-J1 ;
Note3. Indoor unit sized P100-P250 does NOT share BC controller ports with other Indoor units ;
Note4. As bents cause pressure loss on transportation of refrigerant, fewer bents design is better ;
Piping length needs to consider the actual length and equivalent length which bents are counted.
Equivalent piping length (m)=Actual piping length+"M" x Quantity of bent.
Note5. Set DIP-SW 4-6 to ON of BC controller, in case of connected Indoor unit sized P100-P140 with 2 ports.
Note6. It is also possible to connect Indoor unit sized P100-P140 with 1 port (set DIP-SW 4-6 to OFF).
However, the cooling capacity decreases a little (For details, refer to the chapter HEAT SOURCE UNITS, WR2 SERIES, 6-4. Correction by port counts of the BC controller).
Note7. Individual indoor units grouped together to connect to the BC controller via one port cannot operate individually in heating and cooling modes at the same time. I.e., they must all function in either heating or cooling together.
Note8. For sub BC controller CMB-P-V-GB the connectable indoor unit capacities may sum to equal that of a P350 unit or less. However, if two sub controllers are used the TOTAL sum of connectable units connected to BOTH sub controllers must also not exceed that of a P350 unit.
For sub BC controller CMB-P1016V-HB the connectable indoor unit capacities may sum to equal that or a P350 unit or less. However, if two sub controllers are used the TOTAL sum of connectable units connected to BOTH sub controllers must also not exceed that of a P450 unit.
Note9. Indoor capactiy is described as its model size. For example, PEFY-P63VML-E, its capacity is P63.
Note10. Total down-stream Indoor capacity is the summary of the model size of Indoors down-stream.
For example, PEFY-P63VML-E + PEFY-P32VML-E : Total Indoor capacity = P63 + P32 = P95.

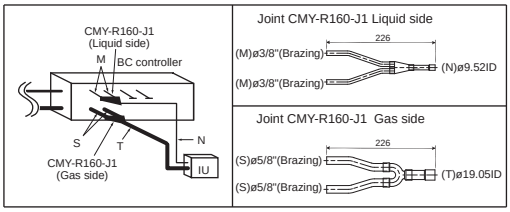

Fig. 3-2-2AA

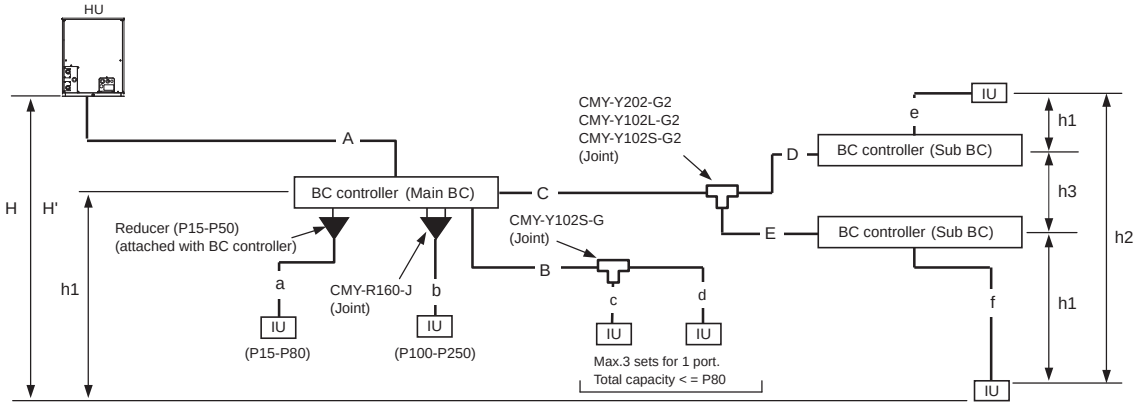

Fig. 3-2-2A Piping scheme

HU : Heat source unit , IU : Indoor unit

Table 3-2-2-1. Piping length limitation (m [ft.])

Item	Piping in the figure	Max. length	Max. equivalent length
Total piping length	A+B+C+D+E+a+b+c+d+e+f	*1	-
Farthest IU from HU	A+C+E+f	165 [541']	190 [623']
Distance between HU and BC	A	110 [360'] *1	110 [360'] *1
Farthest IU from BC controller	B+d or C+D+e or C+E+f	40 [131'] *2*3	40 [131'] *2*3
Heignt between HU and IU (HU above IU)	H	50 [164'] *6	-
Heignt between HU and IU (HU under IU)	H'	40 [131'] *7	-
Height between IU and BC	h1	15 [49'] (10 [32']) *4	-
Height between IU and IU	h2	15 [49'] (10 [32']) *4	-
Heignt between BC(Main or Sub) and BC(Sub)	h3	15 [49'] (10 [32']) *5	-

HU : Heat source Unit ; IU : Indoor Unit ; BC : BC controller
*1. Refer to the section 3-2-4.
*2. Details refer to Fig.3-2-2-1
*3. Farthest Indoor from BC controller "B+d or C+D+e or C+E+f " can exceed 40m till 60m if no Indoor sized P200, P250 connected.
Details refer to Fig.3-2-2-1
*4. Distance of Indoor sized P200, P250 from BC must be less than 10m, if any.
*5. When using 2 Sub BC controllers, max. height "h3" should be considered.

Table3-2-2-2. Bent equivalent length "M"

Heat source Model	M (m/bent [ft./bent])
P200YHM	0.35 [1.15']
P250YHM	0.42 [1.38']
P300YHM	0.42 [1.38']

Fig. 3-2-2-1 Piping length and height between IU and BC controller

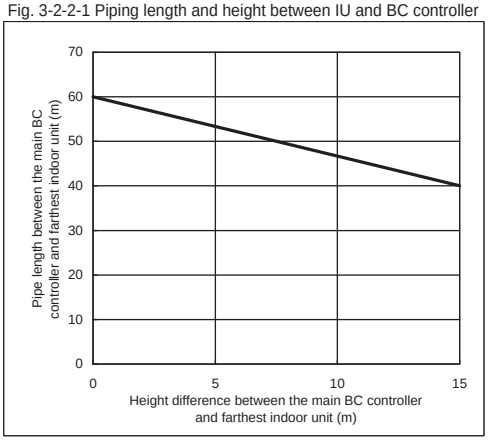

Table3-2-2-3. Piping "A"size selection rule (mm [in.])

Heat source Model	Pipe(High pressure)	Pipe(Low pressure)
P200YHM	ø15.88 [5/8"]	ø19.05 [3/4"]
P250YHM	ø19.05 [3/4"]	ø22.20 [7/8"]
P300YHM	ø19.05 [3/4"]	ø22.20 [7/8"]

Table3-2-2-4. Piping "B" size seleciton rule (mm [in.])

Total down-stream Indoor capacity	Pipe(Liquid)	Pipe(Gas)
P140 or less	ø9.52 [3/8"]	ø15.88 [5/8"]

Table3-2-2-5. Piping "C", "D", "E" size selection rule (mm [in.])

Total down-stream Indoor capacity	Pipe(Lequid)	Pipe(HP Gas)	Pipe(LP Gas)
P200 or less	ø9.52 [3/8"]	ø15.88 [5/8"]	ø19.05 [3/4"]
P201 to P300	ø9.52 [3/8"]	ø19.05 [3/4"]	ø22.20 [7/8"]
P301 to P350	ø12.70 [1/2"]	ø19.05 [3/4"]	ø28.58 [1-1/8"]
P351 to P400	ø12.70 [1/2"]	ø22.20 [7/8"]	ø28.58 [1-1/8"]
P401 to P500	ø15.88 [5/8"]	ø22.20 [7/8"]	ø28.58 [1-1/8"]

HP : High pressure, LP:Low pressure

Table3-2-2-6. Piping "a", "b", "c", "d", "e", "f" saize selection rule (mm [in.])

Indoor Unit size	Pipe(Lequid)	Pipe(Gas)
P15 to P50, GUF-50RD(H)	ø6.35 [1/4"]	ø12.70 [1/2"]
P63 to P140, GUF-100RD(H)	ø9.52 [3/8"]	ø15.88 [5/8"]
P200	ø9.52 [3/8"]	ø19.05 [3/4"]
P250	ø9.52 [3/8"]	ø22.20 [7/8"]

3-2-3. IF more than 16 ports are in use, or if there is more than one BC controller in use for two heat source units

Note1. No Header usable on PQRY system.
Note2. Indoor unit sized P100-P250 should be connected to BC controller via Y shape joint CMY-R160-J1 ;
Note3. Indoor unit sized P100-P250 does NOT share BC controller ports with other Indoor units ;
Note4. As bents cause pressure loss on transportation of refrigerant, fewer bents design is better ;
Piping length needs to consider the actual length and equivalent length which bents are counted.
Equivalent piping length (m)=Actual piping length+"M" x Quantity of bent.
Note5. Set DIP-SW 4-6 to ON of BC controller, in case of connected Indoor unit sized P100-P140 with 2 ports.
Note6. It is also possible to connect Indoor unit sized P100-P140 with 1 port (set DIP-SW 4-6 to OFF).
However, the cooling capacity decreases a little (For details, refer to the chapter HEAT SOURCE UNITS, WR2 SERIES, 6-4. Correction by port counts of the BC controller).
Note7. Individual indoor units grouped together to connect to the BC controller via one port cannot operate individually in heating and cooling modes at the same time. I.e., they must all function in either heating or cooling together.
Note8. For sub BC controller CMB-P-V-GB the connectable indoor unit capacities may sum to equal that of a P350 unit or less. However, if two sub controllers are used the TOTAL sum of connectable units connected to BOTH sub controllers must also not exceed that of a P350 unit.
For sub BC controller CMB-P1016V-HB the connectable indoor unit capacities may sum to equal that or a P350 unit or less. However, if two sub controllers are used the TOTAL sum of connectable units connected to BOTH sub controllers must also not exceed that of a P450 unit.
Note9. Indoor capactiy is described as its model size. For example, PEFY-P63VML-E, its capacity is P63.
Note10. Total down-stream Indoor capacity is the summary of the model size of Indoors down-stream.
For example, PEFY-P63VML-E + PEFY-P32VML-E : Total Indoor capacity = P63 + P32 = P95.

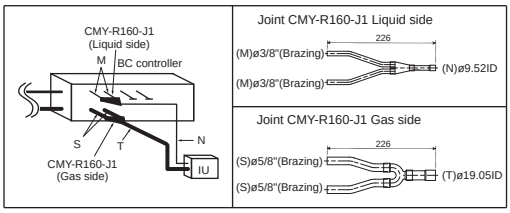

Fig. 3-2-3AA

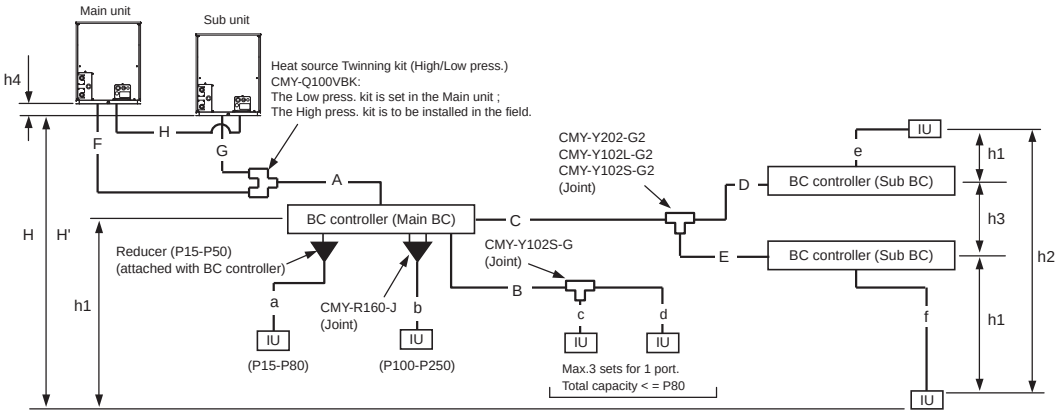

Fig. 3-2-3A Piping scheme

IU : Indoor unit

Table3-2-3-1. Piping length limitation (m [ft.])

Item	Piping in the figure	Max. length	Max. equivalent length
Total piping length	F+G+H+A+B+C+D+E+a+b+c+d+e+f	*1	-
Farthest IU from HU	F(G)+A+C+E+f	165 [541']	190 [623']
Distance between HU and BC	F(G)+A	110 [360'] *1	110 [360'] *1
Farthest IU from BC controller	B+d or C+D+e or C+E+f	40 [131'] *2*3	40 [131'] *2*3
Heignt between HU and IU (HU above IU)	H	50 [164'] *6	-
Heignt between HU and IU (HU under IU)	H'	40 [131'] *7	-
Height between IU and BC	h1	15 [49'] (10 [32']) *4	-
Height between IU and IU	h2	15 [49'] (10 [32']) *4	-
Heignt between BC(Main or Sub) and BC(Sub)	h3	15 [49'] (10 [32']) *5	-
Distance between Main unit and Sub unit	F+G or H	5 [16']	-
Height between Main unit and Sub unit	h4	0.1 [0.3']	-

HU : Heat source Unit ; IU : Indoor Unit ; BC : BC controller
*1. Refer to the section 3-2-4.
*2. Details refer to Fig.3-2-3-1
*3. Farthest Indoor from BC controller "B+d or C+D+e or C+E+f " can exceed 40m till 60m if no Indoor sized P200, P250 connected. Details refer to Fig.3-2-3-1
*4. Distance of Indoor sized P200, P250 from BC must be less than 10m, if any.
*5. When using 2 Sub BC controllers, max. height "h3" should be considered.

Table3-2-3-2. Bent equivalent length "M"

Heat source Model	M (m/bent [ft./bent])
P400YSHM	0.50 [1.64']
P450YSHM	0.50 [1.64']
P500YSHM	0.50 [1.64']
P550YSHM	0.50 [1.64']
P600YSHM	0.50 [1.64']

Fig. 3-2-3-1 Piping length and height between IU and BC controller

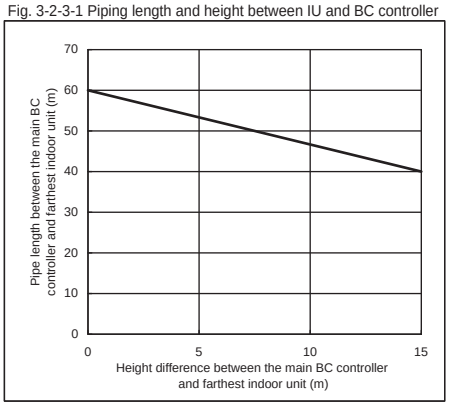

Table3-2-3-3. Piping "A"size selection rule (mm [in.])

Heat source Model	Pipe(High pressure)	Pipe(Low pressure)
P400YSHM	ø22.20 [7/8"]	ø28.58 [1-1/8"]
P450YSHM	ø22.20 [7/8"]	ø28.58 [1-1/8"]
P500YSHM	ø22.20 [7/8"]	ø28.58 [1-1/8"]
P550YSHM	ø28.58 [1-1/8"]	ø28.58 [1-1/8"]
P600YSHM	ø28.58 [1-1/8"]	ø28.58 [1-1/8"]

Table3-2-3-4. Piping "B" size seleciton rule (mm [in.])

Total down-stream Indoor capacity	Pipe(Liquid)	Pipe(Gas)
P140 or less	ø9.52 [3/8"]	ø15.88 [5/8"]

Table3-2-3-5. Piping "C", "D", "E" size selection rule (mm [in.])

Total down-stream Indoor capacity	Pipe(Lequid)	Pipe(HP Gas)	Pipe(LP Gas)
P200 or less	ø9.52 [3/8"]	ø15.88 [5/8"]	ø19.05 [3/4"]
P201 to P300	ø9.52 [3/8"]	ø19.05 [3/4"]	ø22.20 [7/8"]
P301 to P350	ø12.70 [1/2"]	ø19.05 [3/4"]	ø28.58 [1-1/8"]
P351 to P400	ø12.70 [1/2"]	ø22.20 [7/8"]	ø28.58 [1-1/8"]
P401 to P500	ø15.88 [5/8"]	ø22.20 [7/8"]	ø28.58 [1-1/8"]

HP : High pressure, LP:Low pressure

Table3-2-3-6. Piping "F", "G", "H" size selection rule (mm [in.])

Heat source Model	Pipe(High pressure)	Pipe(Low pressure)
P200YHM	ø15.88 [5/8"]	ø19.05 [3/4"]
P250YHM	ø19.05 [3/4"]	ø22.20 [7/8"]
P300YHM	ø19.05 [3/4"]	ø22.20 [7/8"]

Table3-2-3-7. Piping "a", "b", "c", "d", "e", "f" size selection rule (mm [in.])

Indoor Unit size	Pipe(Lequid)	Pipe(Gas)
P15 to P50	ø6.35 [1/4"]	ø12.70 [1/2"]
P63 to P140	ø9.52 [3/8"]	ø15.88 [5/8"]
P200	ø9.52 [3/8"]	ø19.05 [3/4"]
P250	ø9.52 [3/8"]	ø22.20 [7/8"]

3-2-4. Total piping length restrictions

[PQRY-P200, 250, 300YHM-A(-BS)(-H)]

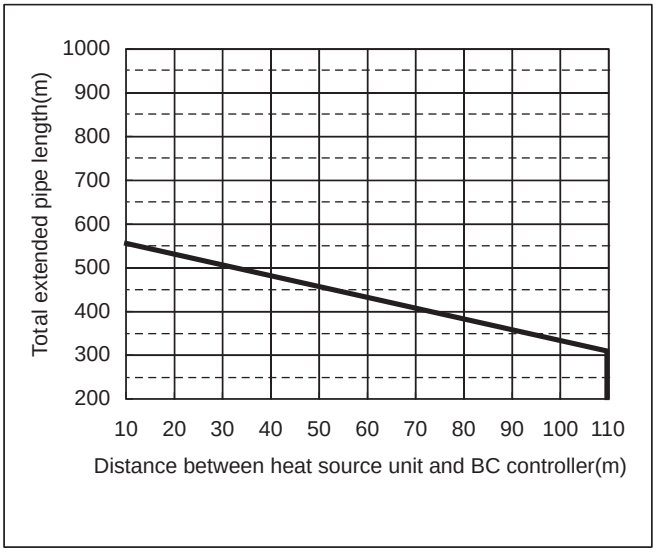

[PQRY-P400, 450, 500, 550, 600YSHM-A(-BS)(-H)]

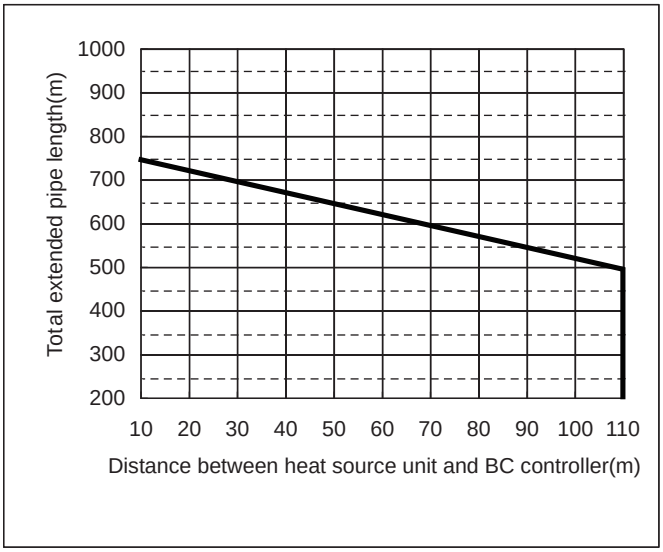

3-3. Refrigerant charging calculation

Sample connection (with 3 BC controller and 6 indoor units)

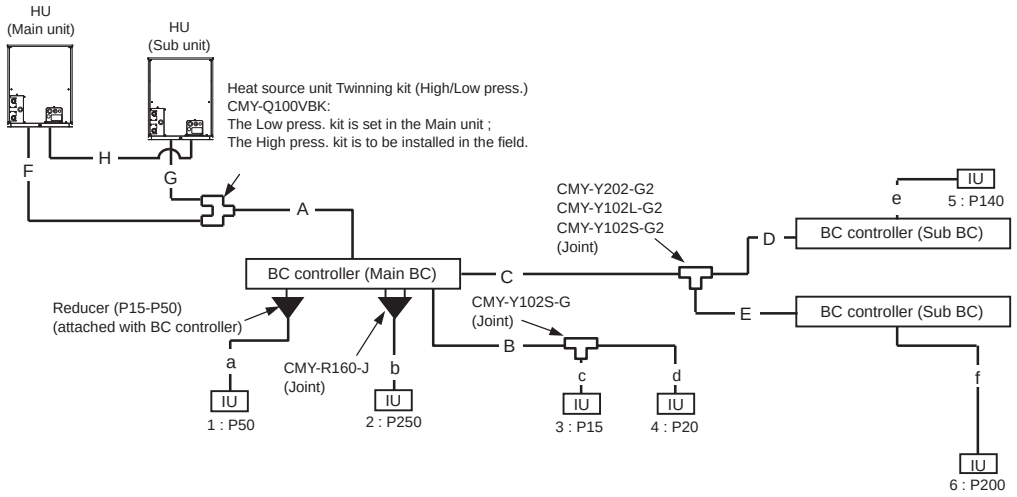

■Amount of additional refrigerant to be charged

Refrigerant for extended pipes (field piping) is not factory-charged to the outdoor unit. Add an appropriate amount of refrigerant for each pipes on site.
Record the size of each high pressure pipe and liquid pipe, and the amout of refrigerant that was charged on the outdoor unit for future reference.

■Calculating the amount of additional refrigerant to be charged

The amount of refrigerant to be charged is calculated with the size of the on-site-installed hige pressure pipes and liquid pipes, and their length.
Calculate the amount of refrigerant to be charged according to the formula below.
Round up the calculation result to the nearest 0.1kg. (i.e., 16.08 kg = 16.1 kg)

<Amount of additional refrigerant to be charged>

■Calculating the amount of additional refrigerant to be charged

Additional refrigerant charge	=	High pressure pipe size Total length of ø 28.58 x 0.36	+	High pressure pipe size Total length of ø 22.20 x 0.23	+	High pressure pipe size Total length of ø 19.05 x 0.16	+	High pressure pipe size Total length of ø 15.88 x 0.11
(kg)		(m) x 0.36(kg/m)		(m) x 0.23(kg/m)		(m) x 0.16(kg/m)		(m) x 0.11(kg/m)

+	Liquid pipe size Total length of ø 15.88 x 0.2	+	Liquid pipe size Total length of ø 12.7 x 0.12	+	Liquid pipe size Total length of ø 9.52 x 0.06	+	Liquid pipe size Total length of ø 6.35 x 0.024
	(m) x 0.20(kg/m)		(m) x 0.12(kg/m)		(m) x 0.06(kg/m)		(m) x 0.024(kg/m)

+	BC controller (Standard / Main)
	3.0 kg

+	BC controller (Sub) Total units	Charged amount
	1 unit	1.0 kg
	2 units	2.0 kg

+	Total capacity of connected indoor units	Charged amount
	-80	2.0 kg
	81 - 160	2.5 kg
	161 - 330	3.0 kg
	331 - 390	3.5 kg
	391 - 480	4.5 kg
	481 - 630	5.0 kg
	631 - 710	6.0 kg
	711 - 800	8.0 kg
	801 - 890	9.0 kg
	891 -	10.0 kg

■Amount of factory charged refrigerant

Outdoor unit Model	Charged amount
P200	5.0 kg
P250	
P300	

■Sample calculation

			Indoor			
A :	ø28.58	40m	1 : P50	a :	ø6.35	5m
B :	ø9.52	10m	2 : P250	b :	ø9.52	3m
C :	ø12.70	10m	3 : P15	c :	ø6.35	2m
D :	ø9.52	5m	4 : P20	d :	ø6.35	3m
E :	ø9.52	5m	5 : P140	e :	ø9.52	3m
F :	ø22.20	2m	6 : P200	f :	ø9.52	10m
G :	ø22.20	1m				

Total length for each pipe size :
- ø28.58 A = 40m
- ø22.20 F+G = 2+1 = 3m
- ø12.70 C = 10m
- ø9.52 B+D+E+b+e+f = 36m
- ø6.35 a+c+d =10m

Therefore, additional refrigerant charge = 40x0.36 + 3x0.23 + 10x0.12 + 36x0.06 + 10x0.024 + 3.0 + 2.0 + 6.0
= 29.69kg
≒ 29.7kg

■Limitation of the amount of refrigerant to be charged

The above calculation result of the amount of refrigerant to be charged must become below the value in the table below.

Heat source unit model	P200	P250	P300	P400	P450	P500	P550	P600
Maximum amount of refrigerant *1 kg	34.3	43.3	44.3	58.5	65.5	79.2	67.2	70.9

*1 Amount of additional refrigerant to be charged on site.

4. Installation

4-1. Requirement on installation site

1. No direct thermal radiation to the unit.
2. No possibility of annoying the neighbors by the sound of the unit.
   Valves and refrigerant flow on the Heat source unit may generate noise.
3. Avoid the sites where strong winds blow.
4. With strength to bear the weight of the unit.
5. Drain flow from the unit is cared at heating mode.
6. Enough space for installation and service as shown at 4-2.
7. Avoid the sites where acidic solutions or chemical sprays (sulfur series) are used frequently.
8. The unit should be secure from combustible gas, oil, steam, chemical gas like acidic solution, sulfur gas and so on.

4-2. Spacing

In case of single installation, 600mm or more of back space as front space makes easier access when servicing the unit from rear side.

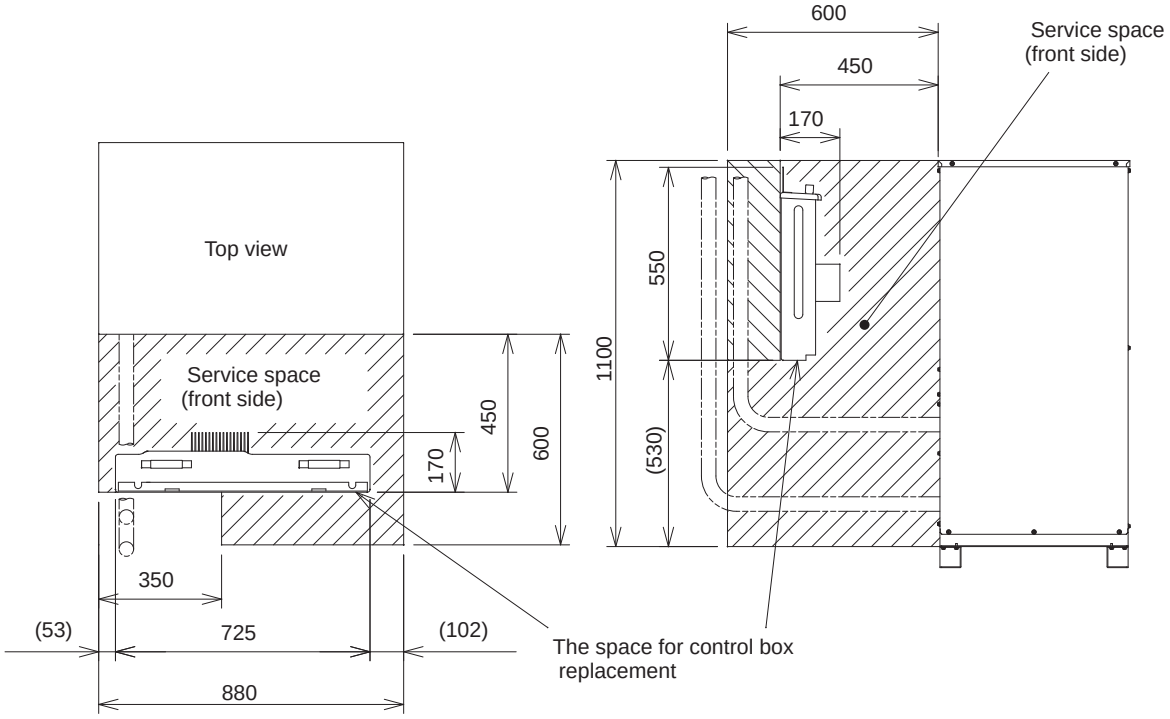

4-3. Piping direction

<Model : PQHY, PQRY-P-YHM-A(-BS)>

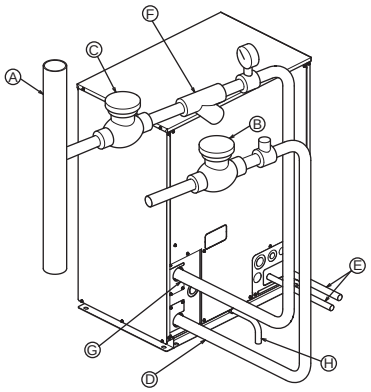

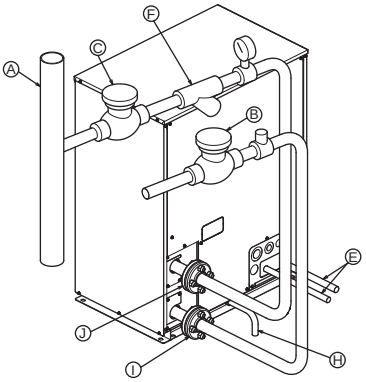

Ⓐ Main circulating water pipe
Ⓑ Shutoff valve
Ⓒ Shutoff valve
Ⓓ Water outlet (lower)
Ⓔ Refrigerant pipes
Ⓕ Y-type strainer
Ⓖ Water inlet (upper)
Ⓗ Drain pipe
Ⓘ Water outlet flange (lower)
Ⓙ Water intlet flange (upper)

1. Insulation installation

With City Multi WY/ WR2 Series piping, as long as the temperature range of the circulating water is kept to average temperatures year-round (29.4°C[85°F] in the summer, 21.1°C[70°F] in the winter), there is no need to insulate or otherwise protect indoor piping from exposure. You should use insulation in the following situations:

- Any heat source piping.
- Indoor piping in cold-weather regions where frozen pipes are a problem.
- When air coming from the outside causes condensation to form on piping.
- Any drainage piping.

2. Water processing and water quality control

To preserve water quality, use the closed type of cooling tower for WY/ WR2. When the circulating water quality is poor, the water heat exchanger can develop scales, leading to a reduction in heat-exchange power and possible corrosion of the heat exchanger. Please pay careful attention to water processing and water quality control when installing the water circulation system.

- Removal of foreign objects or impurities within the pipes.
  During installation, be careful that foreign objects, such as welding fragments, sealant particles, or rust, do not enter the pipes.
- Water Quality Processing
  ① Depending on the quality of the cold-temperature water used in the air conditioner, the copper piping of the heat exchanger may become corroded. We recommend regular water quality processing.
  Cold water circulation systems using open heat storage tanks are particularly prone to corrosion.
  When using an open-type heat storage tank, install a water-to-water heat exchanger, and use a closed-loop circuit on the air conditioner side. If a water supply tank is installed, keep contact with air to a minimum, and keep the level of dissolved oxygen in the water no higher than 1mg/ℓ.
  ② Water quality standard

Items		Lower mid-range temperature water system		Tendency	
		Recirculating water [20<T<60°C] [68<T<140°F]	Make-up water	Corrosive	Scale-forming
Standard items	pH (25°C)[77°F]	7.0 ~ 8.0	7.0 ~ 8.0	○	○
	Electric conductivity (mS/m) (25°C)[77°F] (μS/cm) (25°C)[77°F]	30 or less [300 or less]	30 or less [300 or less]	○	○
	Chloride ion (mg Cl^-/ℓ)	50 or less	50 or less	○	
	Sulfate ion (mg SO_4^{2-}/ℓ)	50 or less	50 or less	○	
	Acid consumption (pH4.8) (mg $CaCO_3$/ℓ)	50 or less	50 or less		○
	Total hardness (mg $CaCO_3$/ℓ)	70 or less	70 or less		○
	Calcium hardness (mg $CaCO_3$/ℓ)	50 or less	50 or less		○
	Ionic silica (mg SiO_2/ℓ)	30 or less	30 or less		○
Reference items	Iron (mg Fe/ℓ)	1.0 or less	0.3 or less	○	○
	Copper (mg Cu/ℓ)	1.0 or less	0.1 or less	○	
	Sulfide ion (mg S^{2-}/ℓ)	not to be detected	not to be detected	○	
	Ammonium ion (mg NH_4^+/ℓ)	0.3 or less	0.1 or less	○	
	Residual chlorine (mg Cl/ℓ)	0.25 or less	0.3 or less	○	
	Free carbon dioxide (mg CO_2/ℓ)	0.4 or less	4.0 or less	○	
	Ryzner stability index	–	–	○	○

Reference : Guideline of Water Quality for Refrigeration and Air Conditioning Equipment. (JRA GL02E-1994)

③ Please consult with a water quality control specialist about water quality control methods and water quality calculations before using anti-corrosive solutions for water quality management.
④ When replacing a previously installed air conditioning device (even when only the heat exchanger is being replaced), first conduct a water quality analysis and check for possible corrosion.
Corrosion can occur in cold-water systems even if there has been no prior signs of corrosion. If the water quality level has dropped, please adjust water quality sufficiently before replacing the unit.

5. Caution for refrigerant leakage

The installer and/or air conditioning system specialist shall secure safety against refrigerant leakage according to local regulations or standards. The following standard may be applicable if no local regulation or standard is available.

5-1. Refrigerant property

R410A refrigerant is harmless and incombustible. The R410A is heavier than the indoor air in density. Leakage of the refrigerant in a room has possibility to lead to a hypoxia situation. Therefore, the Critial concentration specified below shall not be exceeded even if the leakage happens.

- **Critical concentration**

Critical concentration hereby is the refrigerant concentration in which no human body would be hurt if immediate measures can be taken when refrigerant leakage happens.

Critical concentration of R410A: 0.30kg/m^3
(The weight of refrigeration gas per 1 m^3 air conditioning space.);
* The Critical concentration is subject to ISO5149, EN378-1.

For the CITY MULTI system, the concentration of refrigerant leaked should not have a chance to exceed the Critical concentration in any situntion.

5-2. Confirm the Critical concentration and take countermeasure

The maximum refrigerant leakage concentration (Rmax) is defined as the result of the possible maximum refrigerant weight (Wmax) leaked into a room divided by its room capacity (V). It is referable to Fig. 5-1. The refrigerant of Heat source unit here includes its original charge and additional charge at the site.
The additional charge is calculated according to the refrigerant charging calculation of each kind of Heat source unit, and shall not be over charged at the site. Procedure 5-2-1~3 tells how to confirm maximum refrigerant leakage concentration (Rmax) and how to take countermeasures against a possible leakage.

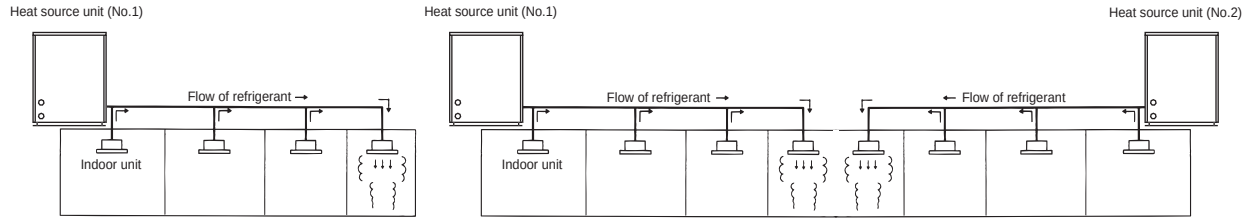

Maximum refrigerant leakage concentration (Rmax)
Rmax=Wmax / V (kg/m^3)

Maximum refrigerant leakage concentration (Rmax)
Rmax=Wmax / V (kg/m ^{3}) W1: Refrigerant weight of Heat source unit No.1
where, Wmax=W1+W 2 W2: Refrigerant weight of Heat source unit No.2

Fig. 5-1 The maximum refrigerant leakage concentration

5-2-1.Find the room capacity (V),
If a room having total opening area more than 0.15% of the floor area at a low position with another room/space, the two rooms/space are considered as one. The total space shall be added up.

5-2-2.Find the possible maximum leakage (Wmax) in the room. If a room has Indoor unit(s) from more than 1 Heat source unit, add up the refrigerant of the Heat source units.

5-2-3.Divide (Wmax) by (V) to get the maximum refrigerant leakage concentration (Rmax).

5-2-4.Find if there is any room in which the maximum refrigerant leakage concentration (Rmax) is over 0.30kg/m^3.
If no, then the CITY MULTI is safe against refrigerant leakage.
If yes, following countermeasure is recommended to do at site.
Countermeasure 1: Let-out (making V bigger)
Design an opening of more than 0.15% of the floor area at a low position of the wall to let out the refrigerant whenever leaked.
e.g. make the upper and lower seams of door big enough.
Countermeasure 2: Smaller total charge (making Wmax smaller)
e.g. Avoid connecting more than 1 Heat source unit to one room.
e.g. Using smaller model size but more Heat source units.
e.g. Shorten the refrigerant piping as much as possible.
Countermeasure 3: Fresh air in from the ceiling (Ventilation)
As the density of the refrigerant is bigger than that of the air. Fresh air supply from the ceiling is better than air exhausting from the ceiling. Fresh air supply solution refers to Fig. 5-2~4.

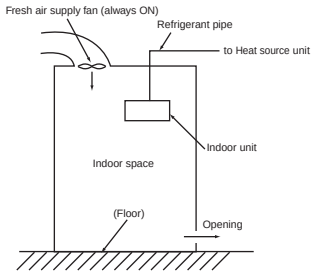

Fig.5-2. Fresh air supply always ON

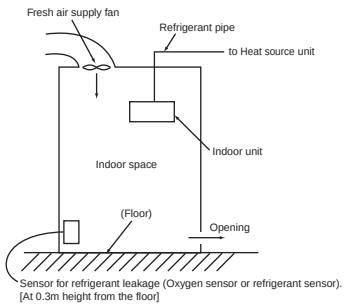

Fig.5-3. Fresh air supply upon sensor action

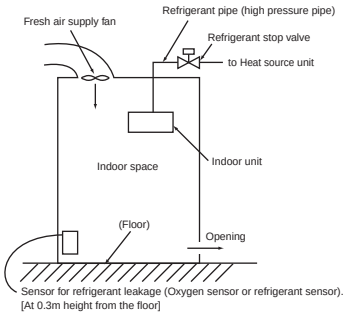

Fig.5-4. Fresh air supply and refrigerant shut-off upon sensor action

Note 1. Countermeasure 3 should be done in a proper way in which the fresh air supply shall be on whenever the leakage happens.
Note 2. In principle, MITSUBISHI ELECTRIC requires proper piping design, installation and air-tight testing after installation to avoid leakage happening.
In the area should earthquake happen, anti-vibration measures should be fully considered.
The piping should consider the extension due to the temperature variation.

CITY MULTI
R410A Series G7

DATA BOOK

MITSUBISHI ELECTRIC CORPORATION
HEAD OFFICE: TOKYO BLDG., 2-7-3, MARUNOUCHI, CHIYODA-KU, TOKYO 100-8310, JAPAN

Issued in Jun. 2010 MEE09K024
Printed in Japan

New publication effective Jun. 2010.
Specifications subject to change without notice.