Changes for the Better

MITSUBISHI ELECTRIC

AIR CONDITIONERS

MODELS

PQHY-P650YSHM-A
PQHY-P700YSHM-A
PQHY-P750YSHM-A
PQHY-P800YSHM-A
PQHY-P850YSHM-A
PQHY-P900YSHM-A

DATA BOOK

HEAT SOURCE UNITS

1. SPECIFICATIONS

Model			PQHY-P650YSHM-A
Power source			3-phase 4-wire 380-400-415V 50/60Hz
Cooling capacity (Nominal)	*1	kW	73.0
	*1	kcal / h	62,800
	*1	BTU / h	249,100
	Power input	kW	13.96
	Current input	A	23.5-22.3-21.5
	COP	kW / kW	5.22
Temp. range of cooling	Indoor	W.B.	15.0 ~ 24.0°C(59 ~ 75°F)
	Circulating water	°C	10.0 ~ 45.0°C(50 ~ 113°F)
Heating capacity (Nominal)	*2	kW	81.5
	*2	kcal / h	70,100
	*2	BTU / h	278,100
	Power input	kW	14.74
	Current input	A	24.8-23.6-22.7
	COP	kW / kW	5.52
Temp. range of heating	Indoor	D.B.	15.0 ~ 27.0°C(59 ~ 81°F)
	Circulating water	°C	10.0 ~ 45.0°C(50 ~ 113°F)
Indoor unit connectable	Total capacity		50 ~ 130 % of heat source unit capacity
	Model / Quantity		P15 ~ P250 / 2 ~ 50
Sound pressure level (measured in anechoic room)		dB <A>	53
Refrigerant piping diameter	Liquid pipe	mm (in.)	19.05(3/4) Brazed
	Gas pipe	mm (in.)	34.93(1-3/8) Brazed

Set Model

Model			PQHY-P250YHM-A	PQHY-P200YHM-A	PQHY-P200YHM-A
Circulating water	Water flow rate	m^3 / h	5.76 + 5.76 + 5.76		
		L / min	96 + 96 + 96		
		cfm	3.4 + 3.4 + 3.4		
	Pressure drop	kPa	17	17	17
	Operating volume range	m^3 / h	4.5 + 4.5 + 4.5 ~ 7.2 + 7.2 + 7.2		
Compressor	Type x Quantity		Inverter scroll hermetic compressor	Inverter scroll hermetic compressor	Inverter scroll hermetic compressor
	Manufacture		AC&R Works, MITSUBISHI ELECTRIC CORPORATION	AC&R Works, MITSUBISHI ELECTRIC CORPORATION	AC&R Works, MITSUBISHI ELECTRIC CORPORATION
	Starting method		Inverter	Inverter	Inverter
	Motor output	kW	6.3	4.6	4.6
	Case heater	kW	0.035(240 V)	0.035(240 V)	0.035(240 V)
	Lubricant		MEL32	MEL32	MEL32
External finish			Acrylic painted steel plate	Acrylic painted steel plate	Acrylic painted steel plate
External dimension HxWxD		mm	1,160(1,100 without legs) x 880 x 550	1,160(1,100 without legs) x 880 x 550	1,160(1,100 without legs) x 880 x 550
		in.	45-11/16(43-5/16 without legs) x 34-11/16 x 21-11/16	45-11/16(43-5/16 without legs) x 34-11/16 x 21-11/16	45-11/16(43-5/16 without legs) x 34-11/16 x 21-11/16
Protection devices	High pressure protection		High pressure sensor, High pressure switch at 4.15MPa (601 psi)	High pressure sensor, High pressure switch at 4.15MPa (601 psi)	High pressure sensor, High pressure switch at 4.15MPa (601 psi)
	Inverter circuit (COMP.)		Over-heat protection, Over-current protection	Over-heat protection, Over-current protection	Over-heat protection, Over-current protection
	Compressor		Over-heat protection	Over-heat protection	Over-heat protection
Refrigerant	Type x original charge		R410A x 5.0kg (12lbs)	R410A x 5.0kg (12lbs)	R410A x 5.0kg (12lbs)
	Control		LEV and HIC circuit		
Net weight		kg (lbs)	195(430)	195(430)	195(430)
Heat exchanger			plate type	plate type	plate type
	Water volume in plate	l	5.0	5.0	5.0
	Water pressure Max.	MPa	1.0	1.0	1.0
HIC circuit (HIC: Heat Inter-Changer)			Copper pipe,tube-in-tube structure	Copper pipe,tube-in-tube structure	Copper pipe,tube-in-tube structure
Pipe between unit and distributor	Liquid pipe	mm (in.)	12.7(1/2) Brazed	12.7(1/2) Brazed	12.7(1/2) Brazed
	Gas pipe	mm (in.)	22.2(7/8) Brazed	19.05(3/4) Brazed	19.05(3/4) Brazed
Drawing	External		KB94T659		
	Wiring		KE94C317	KE94C317	KE94C317
Standard attachment	Document		Installation Manual		
	Accessory		Refrigerant conn. pipe		
Optional parts			Heat Source Twinning kit: CMY-Y300VBK2 Joint: CMY-Y102S-G2,CMY-Y102L-G2,CMY-Y202-G2,CMY-Y302-G2 Header: CMY-Y104/108/1010-G		
Remarks			* Details on foundation work, duct work, insulation work, electrical wiring, power source switch, and other items shall be referred to the Installation Manual. * Due to continuing improvement, above specifications may be subject to change without notice. * The ambient temperature of the heat source unit needs to be kept below 40°C D.B. * The ambient relative humidity of the heat source unit needs to be kept below 80%. * The heat source unit should not be installed at outdoor. * Be sure to mount a strainer (more than 50 meshes) at the water inlet piping of the unit. * Be sure to provide interlocking for the unit operation and water circuit.		

Notes :

1.Nominal cooling conditions(subject to JIS B8615-1)
Indoor:27°CDB/19°CWB(81°FDB/66°FWB), Water temperature:30°C(86°F)
Pipe length:7.5m(24-9/16ft.), Level difference:0m(0ft.)

2.Nominal heating conditions(subject to JIS B8615-1)
Indoor:20°CDB(68°FDB), Water temperature:20°C(68°F)
Pipe length:7.5m(24-9/16ft.), Level difference:0m(0ft.)

Unit converter	
kcal	=kW x 860
BTU/h	=kW x 3,412
cfm	=m^3/min x 35.31
lb	=kg / 0.4536

*Above specification data is subject to rounding variation.

1. SPECIFICATIONS

Model			PQHY-P700YSHM-A
Power source			3-phase 4-wire 380-400-415V 50/60Hz
Cooling capacity (Nominal)	*1	kW	80.0
	*1	kcal / h	68,800
	*1	BTU / h	273,000
	Power input	kW	15.58
	Current input	A	26.3-24.9-24.0
	COP	kW / kW	5.13
Temp. range of cooling	Indoor	W.B.	15.0 ~ 24.0°C(59 ~ 75°F)
	Circulating water	°C	10.0 ~ 45.0°C(50 ~ 113°F)
Heating capacity (Nominal)	*2	kW	88.0
	*2	kcal / h	75,700
	*2	BTU / h	300,300
	Power input	kW	16.51
	Current input	A	27.8-26.4-25.5
	COP	kW / kW	5.33
Temp. range of heating	Indoor	D.B.	15.0 ~ 27.0°C(59 ~ 81°F)
	Circulating water	°C	10.0 ~ 45.0°C(50 ~ 113°F)
Indoor unit connectable	Total capacity		50 ~ 130 % of heat source unit capacity
	Model / Quantity		P15 ~ P250 / 2 ~ 50
Sound pressure level (measured in anechoic room)		dB <A>	53.5
Refrigerant piping diameter	Liquid pipe	mm (in.)	19.05(3/4) Brazed
	Gas pipe	mm (in.)	34.93(1-3/8) Brazed

Set Model

Model			PQHY-P250YHM-A	PQHY-P250YHM-A	PQHY-P200YHM-A
Circulating water	Water flow rate	m^3 / h	5.76 + 5.76 + 5.76		
		L / min	96 + 96 + 96		
		cfm	3.4 + 3.4 + 3.4		
	Pressure drop	kPa	17	17	17
	Operating volume range	m^3 / h	4.5 + 4.5 + 4.5 ~ 7.2 + 7.2 + 7.2		
Compressor	Type x Quantity		Inverter scroll hermetic compressor	Inverter scroll hermetic compressor	Inverter scroll hermetic compressor
	Manufacture		AC&R Works, MITSUBISHI ELECTRIC CORPORATION	AC&R Works, MITSUBISHI ELECTRIC CORPORATION	AC&R Works, MITSUBISHI ELECTRIC CORPORATION
	Starting method		Inverter	Inverter	Inverter
	Motor output	kW	6.3	6.3	4.6
	Case heater	kW	0.035(240 V)	0.035(240 V)	0.035(240 V)
	Lubricant		MEL32	MEL32	MEL32
External finish			Acrylic painted steel plate	Acrylic painted steel plate	Acrylic painted steel plate
External dimension HxWxD		mm	1,160(1,100 without legs) x 880 x 550	1,160(1,100 without legs) x 880 x 550	1,160(1,100 without legs) x 880 x 550
		in.	45-11/16(43-5/16 without legs) x 34-11/16 x 21-11/16	45-11/16(43-5/16 without legs) x 34-11/16 x 21-11/16	45-11/16(43-5/16 without legs) x 34-11/16 x 21-11/16
Protection devices	High pressure protection		High pressure sensor, High pressure switch at 4.15MPa (601 psi)	High pressure sensor, High pressure switch at 4.15MPa (601 psi)	High pressure sensor, High pressure switch at 4.15MPa (601 psi)
	Inverter circuit (COMP.)		Over-heat protection, Over-current protection	Over-heat protection, Over-current protection	Over-heat protection, Over-current protection
	Compressor		Over-heat protection	Over-heat protection	Over-heat protection
Refrigerant	Type x original charge		R410A x 5.0kg (12lbs)	R410A x 5.0kg (12lbs)	R410A x 5.0kg (12lbs)
	Control		LEV and HIC circuit		
Net weight		kg (lbs)	195(430)	195(430)	195(430)
Heat exchanger			plate type	plate type	plate type
	Water volume in plate	l	5.0	5.0	5.0
	Water pressure Max.	MPa	1.0	1.0	1.0
HIC circuit (HIC: Heat Inter-Changer)			Copper pipe,tube-in-tube structure	Copper pipe,tube-in-tube structure	Copper pipe,tube-in-tube structure
Pipe between unit and distributor	Liquid pipe	mm (in.)	12.7(1/2) Brazed	12.7(1/2) Brazed	12.7(1/2) Brazed
	Gas pipe	mm (in.)	22.2(7/8) Brazed	22.2(7/8) Brazed	19.05(3/4) Brazed
Drawing	External		KB94T659		
	Wiring		KE94C317	KE94C317	KE94C317
Standard attachment	Document		Installation Manual		
	Accessory		Refrigerant conn. pipe		
Optional parts			Heat Source Twinning kit: CMY-Y300VBK2 Joint: CMY-Y102S-G2,CMY-Y102L-G2,CMY-Y202-G2,CMY-Y302-G2 Header: CMY-Y104/108/1010-G		
Remarks			* Details on foundation work, duct work, insulation work, electrical wiring, power source switch, and other items shall be referred to the Installation Manual. * Due to continuing improvement, above specifications may be subject to change without notice. * The ambient temperature of the heat source unit needs to be kept below 40°C D.B. * The ambient relative humidity of the heat source unit needs to be kept below 80%. * The heat source unit should not be installed at outdoor. * Be sure to mount a strainer (more than 50 meshes) at the water inlet piping of the unit. * Be sure to provide interlocking for the unit operation and water circuit.		

Notes :

1.Nominal cooling conditions(subject to JIS B8615-1)
Indoor:27°CDB/19°CWB(81°FDB/66°FWB), Water temperature:30°C(86°F)
Pipe length:7.5m(24-9/16ft.), Level difference:0m(0ft.)

2.Nominal heating conditions(subject to JIS B8615-1)
Indoor:20°CDB(68°FDB), Water temperature:20°C(68°F)
Pipe length:7.5m(24-9/16ft.), Level difference:0m(0ft.)

Unit converter	
kcal	=kW x 860
BTU/h	=kW x 3,412
cfm	=m^3/min x 35.31
lb	=kg / 0.4536

*Above specification data is subject to rounding variation.

1. SPECIFICATIONS

Model			PQHY-P750YSHM-A
Power source			3-phase 4-wire 380-400-415V 50/60Hz
Cooling capacity (Nominal)	*1	kW	85.0
	*1	kcal / h	73,100
	*1	BTU / h	290,000
	Power input	kW	17.19
	Current input	A	29.0-27.5-26.5
	COP	kW / kW	4.94
Temp. range of cooling	Indoor	W.B.	15.0 ~ 24.0°C(59 ~ 75°F)
	Circulating water	°C	10.0 ~ 45.0°C(50 ~ 113°F)
Heating capacity (Nominal)	*2	kW	95.0
	*2	kcal / h	81,700
	*2	BTU / h	324,100
	Power input	kW	18.27
	Current input	A	30.8-29.3-28.2
	COP	kW / kW	5.19
Temp. range of heating	Indoor	D.B.	15.0 ~ 27.0°C(59 ~ 81°F)
	Circulating water	°C	10.0 ~ 45.0°C(50 ~ 113°F)
Indoor unit connectable	Total capacity		50 ~ 130 % of heat source unit capacity
	Model / Quantity		P15 ~ P250 / 2 ~ 50
Sound pressure level (measured in anechoic room)		dB <A>	54
Refrigerant piping diameter	Liquid pipe	mm (in.)	19.05(3/4) Brazed
	Gas pipe	mm (in.)	34.93(1-3/8) Brazed

Set Model

Model			PQHY-P250YHM-A	PQHY-P250YHM-A	PQHY-P250YHM-A
Circulating water	Water flow rate	m^3 / h	5.76 + 5.76 + 5.76		
		L / min	96 + 96 + 96		
		cfm	3.4 + 3.4 + 3.4		
	Pressure drop	kPa	17	17	17
	Operating volume range	m^3 / h	4.5 + 4.5 + 4.5 ~ 7.2 + 7.2 + 7.2		
Compressor	Type x Quantity		Inverter scroll hermetic compressor	Inverter scroll hermetic compressor	Inverter scroll hermetic compressor
	Manufacture		AC&R Works, MITSUBISHI ELECTRIC CORPORATION	AC&R Works, MITSUBISHI ELECTRIC CORPORATION	AC&R Works, MITSUBISHI ELECTRIC CORPORATION
	Starting method		Inverter	Inverter	Inverter
	Motor output	kW	6.3	6.3	6.3
	Case heater	kW	0.035(240 V)	0.035(240 V)	0.035(240 V)
	Lubricant		MEL32	MEL32	MEL32
External finish			Acrylic painted steel plate	Acrylic painted steel plate	Acrylic painted steel plate
External dimension HxWxD		mm	1,160(1,100 without legs) x 880 x 550	1,160(1,100 without legs) x 880 x 550	1,160(1,100 without legs) x 880 x 550
		in.	45-11/16(43-5/16 without legs) x 34-11/16 x 21-11/16	45-11/16(43-5/16 without legs) x 34-11/16 x 21-11/16	45-11/16(43-5/16 without legs) x 34-11/16 x 21-11/16
Protection devices	High pressure protection		High pressure sensor, High pressure switch at 4.15MPa (601 psi)	High pressure sensor, High pressure switch at 4.15MPa (601 psi)	High pressure sensor, High pressure switch at 4.15MPa (601 psi)
	Inverter circuit (COMP.)		Over-heat protection, Over-current protection	Over-heat protection, Over-current protection	Over-heat protection, Over-current protection
	Compressor		Over-heat protection	Over-heat protection	Over-heat protection
Refrigerant	Type x original charge		R410A x 5.0kg (12lbs)	R410A x 5.0kg (12lbs)	R410A x 5.0kg (12lbs)
	Control		LEV and HIC circuit		
Net weight		kg (lbs)	195(430)	195(430)	195(430)
Heat exchanger			plate type	plate type	plate type
	Water volume in plate	l	5.0	5.0	5.0
	Water pressure Max.	MPa	1.0	1.0	1.0
HIC circuit (HIC: Heat Inter-Changer)			Copper pipe,tube-in-tube structure	Copper pipe,tube-in-tube structure	Copper pipe,tube-in-tube structure
Pipe between unit and distributor	Liquid pipe	mm (in.)	12.7(1/2) Brazed	12.7(1/2) Brazed	12.7(1/2) Brazed
	Gas pipe	mm (in.)	22.2(7/8) Brazed	22.2(7/8) Brazed	22.2(7/8) Brazed
Drawing	External		KB94T659		
	Wiring		KE94C317	KE94C317	KE94C317
Standard attachment	Document		Installation Manual		
	Accessory		Refrigerant conn. pipe		
Optional parts			Heat Source Twinning kit: CMY-Y300VBK2 Joint: CMY-Y102S-G2,CMY-Y102L-G2,CMY-Y202-G2,CMY-Y302-G2 Header: CMY-Y104/108/1010-G		
Remarks			* Details on foundation work, duct work, insulation work, electrical wiring, power source switch, and other items shall be referred to the Installation Manual. * Due to continuing improvement, above specifications may be subject to change without notice. * The ambient temperature of the heat source unit needs to be kept below 40°C D.B. * The ambient relative humidity of the heat source unit needs to be kept below 80%. * The heat source unit should not be installed at outdoor. * Be sure to mount a strainer (more than 50 meshes) at the water inlet piping of the unit. * Be sure to provide interlocking for the unit operation and water circuit.		

Notes :

1.Nominal cooling conditions(subject to JIS B8615-1)
Indoor:27°CDB/19°CWB(81°FDB/66°FWB), Water temperature:30°C(86°F)
Pipe length:7.5m(24-9/16ft.), Level difference:0m(0ft.)

2.Nominal heating conditions(subject to JIS B8615-1)
Indoor:20°CDB(68°FDB), Water temperature:20°C(68°F)
Pipe length:7.5m(24-9/16ft.), Level difference:0m(0ft.)

Unit converter	
kcal	=kW x 860
BTU/h	=kW x 3,412
cfm	=m^3/min x 35.31
lb	=kg / 0.4536

*Above specification data is subject to rounding variation.

Model			PQHY-P800YSHM-A
Power source			3-phase 4-wire 380-400-415V 50/60Hz
Cooling capacity (Nominal)	*1	kW	90.0
	*1	kcal / h	77,400
	*1	BTU / h	307,100
	Power input	kW	19.18
	Current input	A	32.3-30.7-29.6
	COP	kW / kW	4.69
Temp. range of cooling	Indoor	W.B.	15.0 ~ 24.0°C(59 ~ 75°F)
	Circulating water	°C	10.0 ~ 45.0°C(50 ~ 113°F)
Heating capacity (Nominal)	*2	kW	100.0
	*2	kcal / h	86,000
	*2	BTU / h	341,200
	Power input	kW	20.74
	Current input	A	35.0-33.2-32.0
	COP	kW / kW	4.82
Temp. range of heating	Indoor	D.B.	15.0 ~ 27.0°C(59 ~ 81°F)
	Circulating water	°C	10.0 ~ 45.0°C(50 ~ 113°F)
Indoor unit connectable	Total capacity		50 ~ 130 % of heat source unit capacity
	Model / Quantity		P15 ~ P250 / 2 ~ 50
Sound pressure level (measured in anechoic room)		dB <A>	54
Refrigerant piping diameter	Liquid pipe	mm (in.)	19.05(3/4) Brazed
	Gas pipe	mm (in.)	34.93(1-3/8) Brazed

Set Model

Model			PQHY-P300YHM-A	PQHY-P250YHM-A	PQHY-P250YHM-A
Circulating water	Water flow rate	m^3 / h	5.76 + 5.76 + 5.76		
		L / min	96 + 96 + 96		
		cfm	3.4 + 3.4 + 3.4		
	Pressure drop	kPa	17	17	17
	Operating volume range	m^3 / h	4.5 + 4.5 + 4.5 ~ 7.2 + 7.2 + 7.2		
Compressor	Type x Quantity		Inverter scroll hermetic compressor	Inverter scroll hermetic compressor	Inverter scroll hermetic compressor
	Manufacture		AC&R Works, MITSUBISHI ELECTRIC CORPORATION	AC&R Works, MITSUBISHI ELECTRIC CORPORATION	AC&R Works, MITSUBISHI ELECTRIC CORPORATION
	Starting method		Inverter	Inverter	Inverter
	Motor output	kW	7.4	6.3	6.3
	Case heater	kW	0.035(240 V)	0.035(240 V)	0.035(240 V)
	Lubricant		MEL32	MEL32	MEL32
External finish			Acrylic painted steel plate	Acrylic painted steel plate	Acrylic painted steel plate
External dimension HxWxD		mm	1,160(1,100 without legs) x 880 x 550	1,160(1,100 without legs) x 880 x 550	1,160(1,100 without legs) x 880 x 550
		in.	45-11/16(43-5/16 without legs) x 34-11/16 x 21-11/16	45-11/16(43-5/16 without legs) x 34-11/16 x 21-11/16	45-11/16(43-5/16 without legs) x 34-11/16 x 21-11/16
Protection devices	High pressure protection		High pressure sensor, High pressure switch at 4.15MPa (601 psi)	High pressure sensor, High pressure switch at 4.15MPa (601 psi)	High pressure sensor, High pressure switch at 4.15MPa (601 psi)
	Inverter circuit (COMP.)		Over-heat protection, Over-current protection	Over-heat protection, Over-current protection	Over-heat protection, Over-current protection
	Compressor		Over-heat protection	Over-heat protection	Over-heat protection
Refrigerant	Type x original charge		R410A x 5.0kg (12lbs)	R410A x 5.0kg (12lbs)	R410A x 5.0kg (12lbs)
	Control		LEV and HIC circuit		
Net weight		kg (lbs)	195(430)	195(430)	195(430)
Heat exchanger			plate type	plate type	plate type
	Water volume in plate	l	5.0	5.0	5.0
	Water pressure Max.	MPa	1.0	1.0	1.0
HIC circuit (HIC: Heat Inter-Changer)			Copper pipe,tube-in-tube structure	Copper pipe,tube-in-tube structure	Copper pipe,tube-in-tube structure
Pipe between unit and distributor	Liquid pipe	mm (in.)	12.7(1/2) Brazed	12.7(1/2) Brazed	12.7(1/2) Brazed
	Gas pipe	mm (in.)	22.2(7/8) Brazed	22.2(7/8) Brazed	22.2(7/8) Brazed
Drawing	External		KB94T659		
	Wiring		KE94C317	KE94C317	KE94C317
Standard attachment	Document		Installation Manual		
	Accessory		Refrigerant conn. pipe		
Optional parts			Heat Source Twinning kit: CMY-Y300VBK2 Joint: CMY-Y102S-G2,CMY-Y102L-G2,CMY-Y202-G2,CMY-Y302-G2 Header: CMY-Y104/108/1010-G		
Remarks			* Details on foundation work, duct work, insulation work, electrical wiring, power source switch, and other items shall be referred to the Installation Manual. * Due to continuing improvement, above specifications may be subject to change without notice. * The ambient temperature of the heat source unit needs to be kept below 40°C D.B. * The ambient relative humidity of the heat source unit needs to be kept below 80%. * The heat source unit should not be installed at outdoor. * Be sure to mount a strainer (more than 50 meshes) at the water inlet piping of the unit. * Be sure to provide interlocking for the unit operation and water circuit.		

Notes :

1.Nominal cooling conditions(subject to JIS B8615-1)
Indoor:27°CDB/19°CWB(81°FDB/66°FWB), Water temperature:30°C(86°F)
Pipe length:7.5m(24-9/16ft.), Level difference:0m(0ft.)

2.Nominal heating conditions(subject to JIS B8615-1)
Indoor:20°CDB(68°FDB), Water temperature:20°C(68°F)
Pipe length:7.5m(24-9/16ft.), Level difference:0m(0ft.)

Unit converter	
kcal	=kW x 860
BTU/h	=kW x 3,412
cfm	=m^3/min x 35.31
lb	=kg / 0.4536

*Above specification data is subject to rounding variation.

1. SPECIFICATIONS

Model			PQHY-P850YSHM-A
Power source			3-phase 4-wire 380-400-415V 50/60Hz
Cooling capacity (Nominal)	*1	kW	96.0
	*1	kcal / h	82,600
	*1	BTU / h	327,600
	Power input	kW	21.20
	Current input	A	35.7-33.9-32.7
	COP	kW / kW	4.52
Temp. range of cooling	Indoor	W.B.	15.0 ~ 24.0°C(59 ~ 75°F)
	Circulating water	°C	10.0 ~ 45.0°C(50 ~ 113°F)
Heating capacity (Nominal)	*2	kW	108.0
	*2	kcal / h	92,900
	*2	BTU / h	368,500
	Power input	kW	23.21
	Current input	A	39.1-37.2-35.8
	COP	kW / kW	4.65
Temp. range of heating	Indoor	D.B.	15.0 ~ 27.0°C(59 ~ 81°F)
	Circulating water	°C	10.0 ~ 45.0°C(50 ~ 113°F)
Indoor unit connectable	Total capacity		50 ~ 130 % of heat source unit capacity
	Model / Quantity		P15 ~ P250 / 2 ~ 50
Sound pressure level (measured in anechoic room)		dB <A>	54.5
Refrigerant piping diameter	Liquid pipe	mm (in.)	19.05(3/4) Brazed
	Gas pipe	mm (in.)	41.28(1-5/8) Brazed

Set Model

Model			PQHY-P300YHM-A	PQHY-P300YHM-A	PQHY-P250YHM-A
Circulating water	Water flow rate	m^3 / h	5.76 + 5.76 + 5.76		
		L / min	96 + 96 + 96		
		cfm	3.4 + 3.4 + 3.4		
	Pressure drop	kPa	17	17	17
	Operating volume range	m^3 / h	4.5 + 4.5 + 4.5 ~ 7.2 + 7.2 + 7.2		
Compressor	Type x Quantity		Inverter scroll hermetic compressor	Inverter scroll hermetic compressor	Inverter scroll hermetic compressor
	Manufacture		AC&R Works, MITSUBISHI ELECTRIC CORPORATION	AC&R Works, MITSUBISHI ELECTRIC CORPORATION	AC&R Works, MITSUBISHI ELECTRIC CORPORATION
	Starting method		Inverter	Inverter	Inverter
	Motor output	kW	7.4	7.4	6.3
	Case heater	kW	0.035(240 V)	0.035(240 V)	0.035(240 V)
	Lubricant		MEL32	MEL32	MEL32
External finish			Acrylic painted steel plate	Acrylic painted steel plate	Acrylic painted steel plate
External dimension HxWxD		mm	1,160(1,100 without legs) x 880 x 550	1,160(1,100 without legs) x 880 x 550	1,160(1,100 without legs) x 880 x 550
		in.	45-11/16(43-5/16 without legs) x 34-11/16 x 21-11/16	45-11/16(43-5/16 without legs) x 34-11/16 x 21-11/16	45-11/16(43-5/16 without legs) x 34-11/16 x 21-11/16
Protection devices	High pressure protection		High pressure sensor, High pressure switch at 4.15MPa (601 psi)	High pressure sensor, High pressure switch at 4.15MPa (601 psi)	High pressure sensor, High pressure switch at 4.15MPa (601 psi)
	Inverter circuit (COMP.)		Over-heat protection, Over-current protection	Over-heat protection, Over-current protection	Over-heat protection, Over-current protection
	Compressor		Over-heat protection	Over-heat protection	Over-heat protection
Refrigerant	Type x original charge		R410A x 5.0kg (12lbs)	R410A x 5.0kg (12lbs)	R410A x 5.0kg (12lbs)
	Control		LEV and HIC circuit		
Net weight		kg (lbs)	195(430)	195(430)	195(430)
Heat exchanger			plate type	plate type	plate type
	Water volume in plate	l	5.0	5.0	5.0
	Water pressure Max.	MPa	1.0	1.0	1.0
HIC circuit (HIC: Heat Inter-Changer)			Copper pipe,tube-in-tube structure	Copper pipe,tube-in-tube structure	Copper pipe,tube-in-tube structure
Pipe between unit and distributor	Liquid pipe	mm (in.)	12.7(1/2) Brazed	12.7(1/2) Brazed	12.7(1/2) Brazed
	Gas pipe	mm (in.)	22.2(7/8) Brazed	22.2(7/8) Brazed	22.2(7/8) Brazed
Drawing	External		KB94T659		
	Wiring		KE94C317	KE94C317	KE94C317
Standard attachment	Document		Installation Manual		
	Accessory		Refrigerant conn. pipe		
Optional parts			Heat Source Twinning kit: CMY-Y300VBK2 Joint: CMY-Y102S-G2,CMY-Y102L-G2,CMY-Y202-G2,CMY-Y302-G2 Header: CMY-Y104/108/1010-G		
Remarks			* Details on foundation work, duct work, insulation work, electrical wiring, power source switch, and other items shall be referred to the Installation Manual. * Due to continuing improvement, above specifications may be subject to change without notice. * The ambient temperature of the heat source unit needs to be kept below 40°C D.B. * The ambient relative humidity of the heat source unit needs to be kept below 80%. * The heat source unit should not be installed at outdoor. * Be sure to mount a strainer (more than 50 meshes) at the water inlet piping of the unit. * Be sure to provide interlocking for the unit operation and water circuit.		

Notes :

1.Nominal cooling conditions(subject to JIS B8615-1)
Indoor:27°CDB/19°CWB(81°FDB/66°FWB), Water temperature:30°C(86°F)
Pipe length:7.5m(24-9/16ft.), Level difference:0m(0ft.)

2.Nominal heating conditions(subject to JIS B8615-1)
Indoor:20°CDB(68°FDB), Water temperature:20°C(68°F)
Pipe length:7.5m(24-9/16ft.), Level difference:0m(0ft.)

Unit converter	
kcal	=kW x 860
BTU/h	=kW x 3,412
cfm	=m^3/min x 35.31
lb	=kg / 0.4536

*Above specification data is subject to rounding variation.

Model			PQHY-P900YSHM-A
Power source			3-phase 4-wire 380-400-415V 50/60Hz
Cooling capacity (Nominal)	*1	kW	101.0
	*1	kcal / h	86,900
	*1	BTU / h	344,600
	Power input	kW	23.22
	Current input	A	39.1-37.2-35.8
	COP	kW / kW	4.34
Temp. range of cooling	Indoor	W.B.	15.0 ~ 24.0°C(59 ~ 75°F)
	Circulating water	°C	10.0 ~ 45.0°C(50 ~ 113°F)
Heating capacity (Nominal)	*2	kW	113.0
	*2	kcal / h	97,200
	*2	BTU / h	385,600
	Power input	kW	25.67
	Current input	A	43.3-41.1-39.6
	COP	kW / kW	4.40
Temp. range of heating	Indoor	D.B.	15.0 ~ 27.0°C(59 ~ 81°F)
	Circulating water	°C	10.0 ~ 45.0°C(50 ~ 113°F)
Indoor unit connectable	Total capacity		50 ~ 130 % of heat source unit capacity
	Model / Quantity		P15 ~ P250 / 2 ~ 50
Sound pressure level (measured in anechoic room)		dB <A>	55
Refrigerant piping diameter	Liquid pipe	mm (in.)	19.05(3/4) Brazed
	Gas pipe	mm (in.)	41.28(1-5/8) Brazed

Set Model

Model			PQHY-P300YHM-A	PQHY-P300YHM-A	PQHY-P300YHM-A
Circulating water	Water flow rate	m^3 / h	5.76 + 5.76 + 5.76		
		L / min	96 + 96 + 96		
		cfm	3.4 + 3.4 + 3.4		
	Pressure drop	kPa	17	17	17
	Operating volume range	m^3 / h	4.5 + 4.5 + 4.5 ~ 7.2 + 7.2 + 7.2		
Compressor	Type x Quantity		Inverter scroll hermetic compressor	Inverter scroll hermetic compressor	Inverter scroll hermetic compressor
	Manufacture		AC&R Works, MITSUBISHI ELECTRIC CORPORATION	AC&R Works, MITSUBISHI ELECTRIC CORPORATION	AC&R Works, MITSUBISHI ELECTRIC CORPORATION
	Starting method		Inverter	Inverter	Inverter
	Motor output	kW	7.4	7.4	7.4
	Case heater	kW	0.035(240 V)	0.035(240 V)	0.035(240 V)
	Lubricant		MEL32	MEL32	MEL32
External finish			Acrylic painted steel plate	Acrylic painted steel plate	Acrylic painted steel plate
External dimension HxWxD		mm	1,160(1,100 without legs) x 880 x 550	1,160(1,100 without legs) x 880 x 550	1,160(1,100 without legs) x 880 x 550
		in.	45-11/16(43-5/16 without legs) x 34-11/16 x 21-11/16	45-11/16(43-5/16 without legs) x 34-11/16 x 21-11/16	45-11/16(43-5/16 without legs) x 34-11/16 x 21-11/16
Protection devices	High pressure protection		High pressure sensor, High pressure switch at 4.15MPa (601 psi)	High pressure sensor, High pressure switch at 4.15MPa (601 psi)	High pressure sensor, High pressure switch at 4.15MPa (601 psi)
	Inverter circuit (COMP.)		Over-heat protection, Over-current protection	Over-heat protection, Over-current protection	Over-heat protection, Over-current protection
	Compressor		Over-heat protection	Over-heat protection	Over-heat protection
Refrigerant	Type x original charge		R410A x 5.0kg (12lbs)	R410A x 5.0kg (12lbs)	R410A x 5.0kg (12lbs)
	Control		LEV and HIC circuit		
Net weight		kg (lbs)	195(430)	195(430)	195(430)
Heat exchanger			plate type	plate type	plate type
	Water volume in plate	l	5.0	5.0	5.0
	Water pressure Max.	MPa	1.0	1.0	1.0
HIC circuit (HIC: Heat Inter-Changer)			Copper pipe,tube-in-tube structure	Copper pipe,tube-in-tube structure	Copper pipe,tube-in-tube structure
Pipe between unit and distributor	Liquid pipe	mm (in.)	12.7(1/2) Brazed	12.7(1/2) Brazed	12.7(1/2) Brazed
	Gas pipe	mm (in.)	22.2(7/8) Brazed	22.2(7/8) Brazed	22.2(7/8) Brazed
Drawing	External		KB94T659		
	Wiring		KE94C317	KE94C317	KE94C317
Standard attachment	Document		Installation Manual		
	Accessory		Refrigerant conn. pipe		
Optional parts			Heat Source Twinning kit: CMY-Y300VBK2 Joint: CMY-Y102S-G2,CMY-Y102L-G2,CMY-Y202-G2,CMY-Y302-G2 Header: CMY-Y104/108/1010-G		
Remarks			* Details on foundation work, duct work, insulation work, electrical wiring, power source switch, and other items shall be referred to the Installation Manual. * Due to continuing improvement, above specifications may be subject to change without notice. * The ambient temperature of the heat source unit needs to be kept below 40°C D.B. * The ambient relative humidity of the heat source unit needs to be kept below 80%. * The heat source unit should not be installed at outdoor. * Be sure to mount a strainer (more than 50 meshes) at the water inlet piping of the unit. * Be sure to provide interlocking for the unit operation and water circuit.		

Notes :

1.Nominal cooling conditions(subject to JIS B8615-1)
Indoor:27°CDB/19°CWB(81°FDB/66°FWB), Water temperature:30°C(86°F)
Pipe length:7.5m(24-9/16ft.), Level difference:0m(0ft.)

2.Nominal heating conditions(subject to JIS B8615-1)
Indoor:20°CDB(68°FDB), Water temperature:20°C(68°F)
Pipe length:7.5m(24-9/16ft.), Level difference:0m(0ft.)

Unit converter	
kcal	=kW x 860
BTU/h	=kW x 3,412
cfm	=m^3/min x 35.31
lb	=kg / 0.4536

*Above specification data is subject to rounding variation.

PQHY-P200, 250, 300YHM-A

Unit : mm

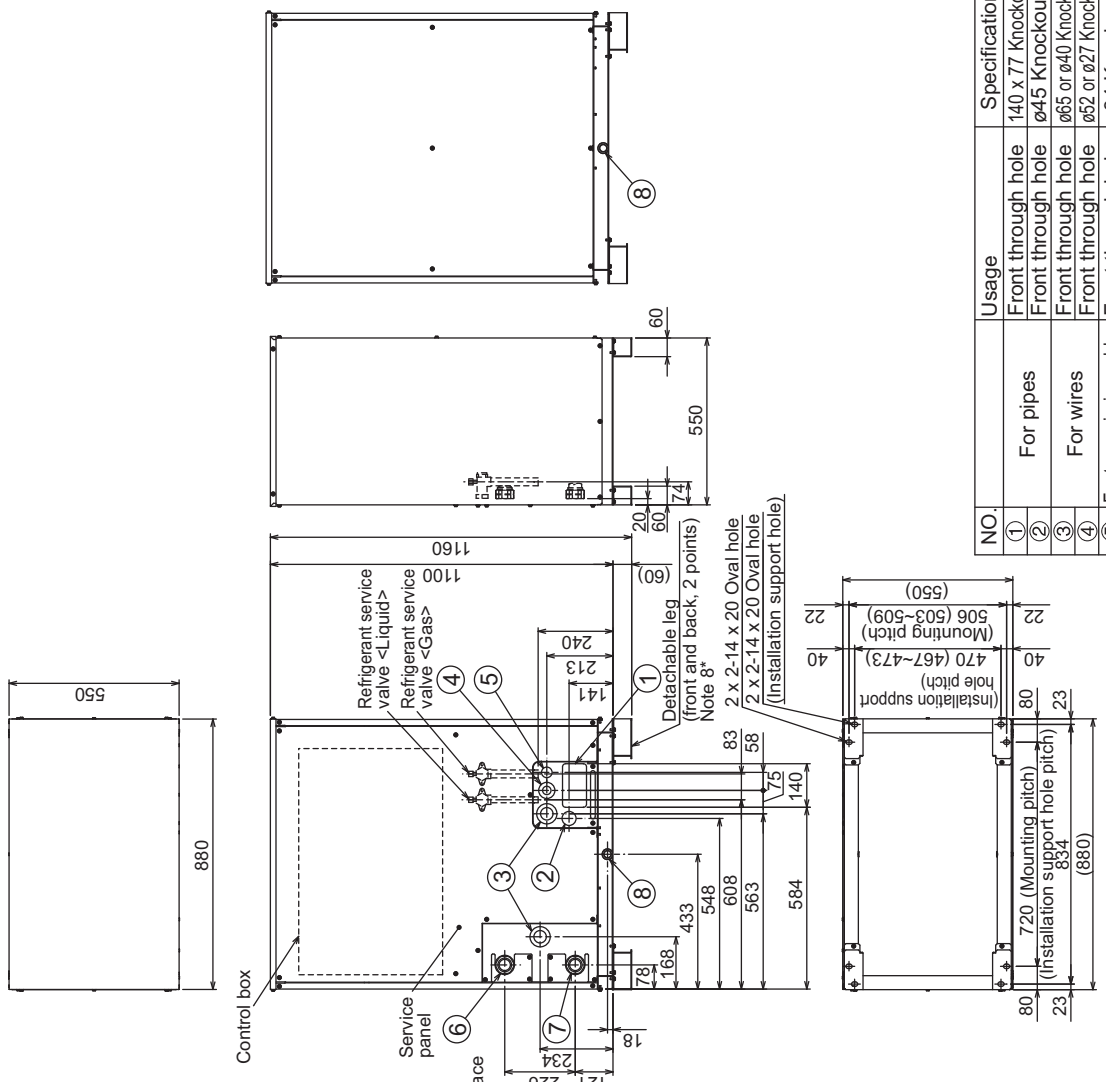

NO.		Usage	Specifications
①	For pipes	Front through hole	140 x 77 Knockout hole
②		Front through hole	ø45 Knockout hole
③	For wires	Front through hole	ø65 or ø40 Knockout hole
④		Front through hole	ø52 or ø27 Knockout hole
⑤	For transmission cables	Front through hole	ø34 Knockout hole
⑥	Water pipe	inlet	Rc1-1/2 Screw
⑦		outlet	Rc1-1/2 Screw
⑧	Drain pipe		Rc3/4 Screw

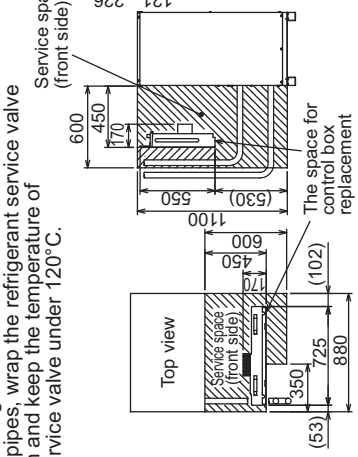

Fig. B

Fig. A

Note 1. Close a hole of the water piping, the refrigerant piping, the power supply, and the control wiring and unused knockout holes with the putty etc. so as not to infiltrate rain water etc. (field erection work)

Note 2. At the time of product shipment, the front side piping specification serves as the local drainage connection. When connecting on the rear side, please remove the rear side plug sealing corks, and attach a front side. Ensure there is no leak after the attachment has been fitted.

Note 3. Take notice of service space as Fig. A. (In case of single installation, 600mm or more of back space as front space makes easier access when servicing the unit from rear side)

Note 4. If water pipes or refrigerant pipes stretch upward, required space for service and maintenance due to replacement of control box is shown in Fig. B.

Note 5. Environmental condition for installation; -20~40°C (DB) as indoor installation.

Note 6. In case the temperature around the heat source unit has possibility to drop under 0°C, be careful for the following point to prevent the pipe burst by the water pipe freeze-up.
- Circulate the water all the time even if the heat source unit is not in operation.
- Drain the water from inside of the heat source unit when the heat source unit will not operate for a long term.

Note 7. Ensure that the drain piping is downward with a pitch of more than 1/100.

Note 8. The detachable leg can be removed at site.

Note 9. At brazing of pipes, wrap the refrigerant service valve with wet cloth and keep the temperature of refrigerant service valve under 120°C.

<Accessories>
- Refrigerant (Liquid) conn. pipe ·····1 pc. (P200/P250/P300 ; Packaged in the accessory kit)
- Refrigerant (Gas) conn. pipe ·····1 pc. (P200/P250/P300 ; Packaged in the accessory kit)

Connecting pipe specifications

Model	Connection specifications for the refrigerant service valve	
	Liquid	Gas
PQHY-P200YHM-A	ø9.52 Brazed *1	ø19.05 Brazed *1
PQHY-P250YHM-A		ø22.2 Brazed *1
PQHY-P300YHM-A		

*1. Connect by using the connecting pipes that are supplied.

PQHY-P650, 700, 750, 800, 850, 900YSHM-A

Unit : mm

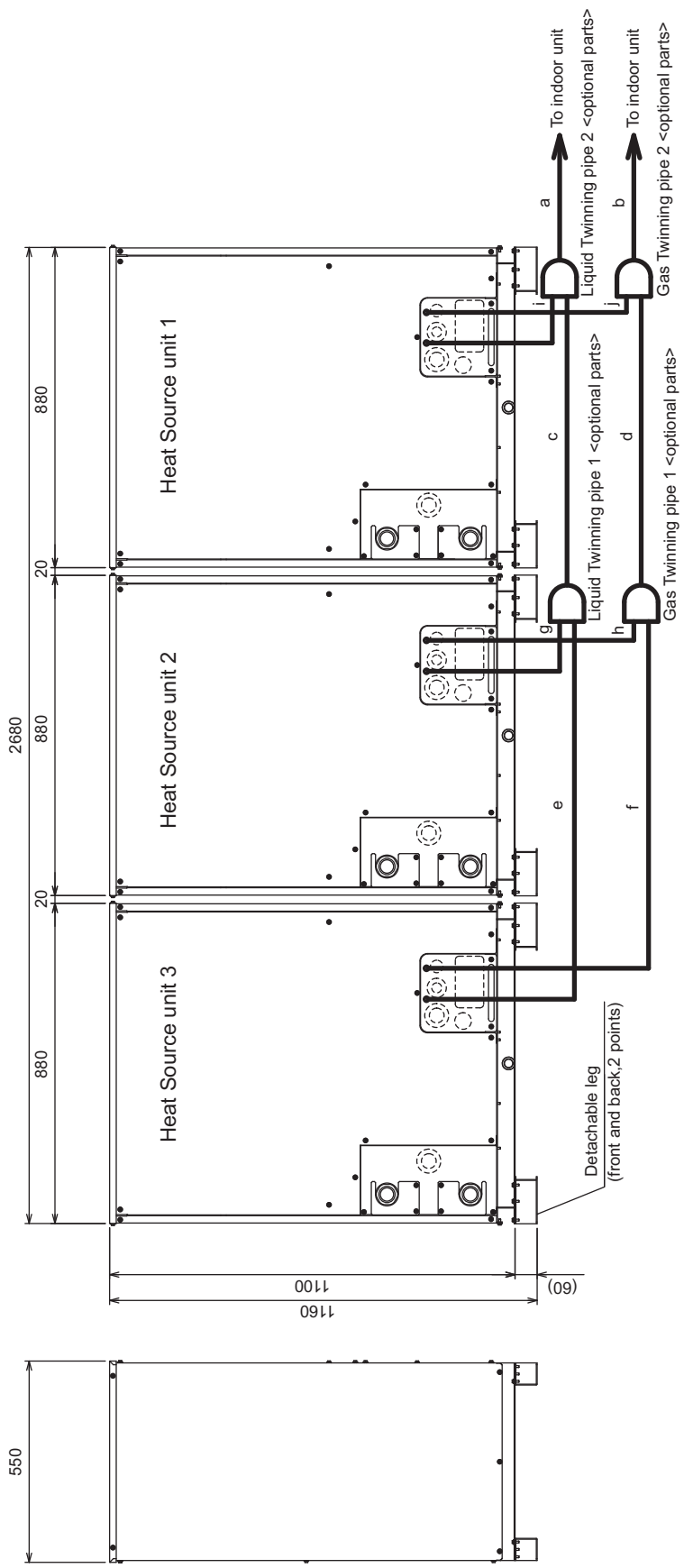

Twinning pipe connection size									
Package unit name		PQHY-P650YSHM-A	PQHY-P700YSHM-A	PQHY-P750YSHM-A	PQHY-P800YSHM-A	PQHY-P850YSHM-A	PQHY-P900YSHM-A		
Component unit name	Heat Source unit 1	PQHY-P250YHM-A	PQHY-P250YHM-A	PQHY-P250YHM-A	PQHY-P300YHM-A	PQHY-P300YHM-A	PQHY-P300YHM-A		
	Heat Source unit 2	PQHY-P200YHM-A	PQHY-P250YHM-A	PQHY-P250YHM-A	PQHY-P250YHM-A	PQHY-P300YHM-A	PQHY-P300YHM-A		
	Heat Source unit 3	PQHY-P200YHM-A	PQHY-P200YHM-A	PQHY-P250YHM-A	PQHY-P250YHM-A	PQHY-P250YHM-A	PQHY-P300YHM-A		
Twinning pipe Kit (optional parts)		CMY-Y300VBK2							
Indoor unit~Twinning pipe 2	Liquid	a	ø19.05						
	Gas	b	ø34.93			ø41.28			
Twinning pipe 1~Twinning pipe 2	Liquid	c	ø 19.05						
	Gas	d	ø34.93						

	Unit model	Liquid	Gas
Twinning pipe~Heat Source unit		e or g or i	f or h or j
	P200	ø19.05	
	P250	ø12.7	ø19.05
	P300		ø22.2

Note 1.Connect the pipes as shown in the figure above. Refer to the table below for the pipe size.
2.The detachable leg can be removed at site.
3.Twinning pipe should not be tilted more than 15 degrees from the ground.
4.See the Installation Manual for the details of Twinning pipe installation.
5.The pipe section before the Twinning pipe (sections "a", "b", "c" and "d" in the figure) must have at least 500mm(19inch) of straight section
(*including the straight pipe that is supplied with the Twinning pipe).
6.Only use the Twinning pipe by Mitsubishi (optional parts).

PQHY-P200,250,300YHM-A(-BS)

Unit : mm[in.]

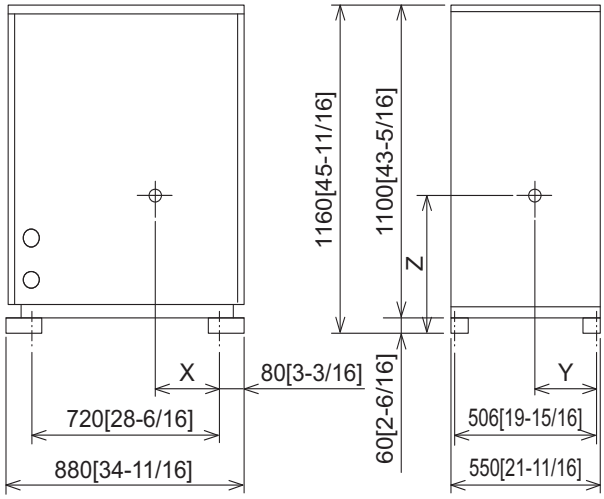

Model	X	Y	Z
PQHY-P200YHM-A[-BS]	418[16-8/16]	250[9-14/16]	532[21]
PQHY-P250YHM-A[-BS]	418[16-8/16]	250[9-14/16]	532[21]
PQHY-P300YHM-A[-BS]	418[16-8/16]	250[9-14/16]	532[21]

PQHY-P200,250,300YHM-A(-BS)

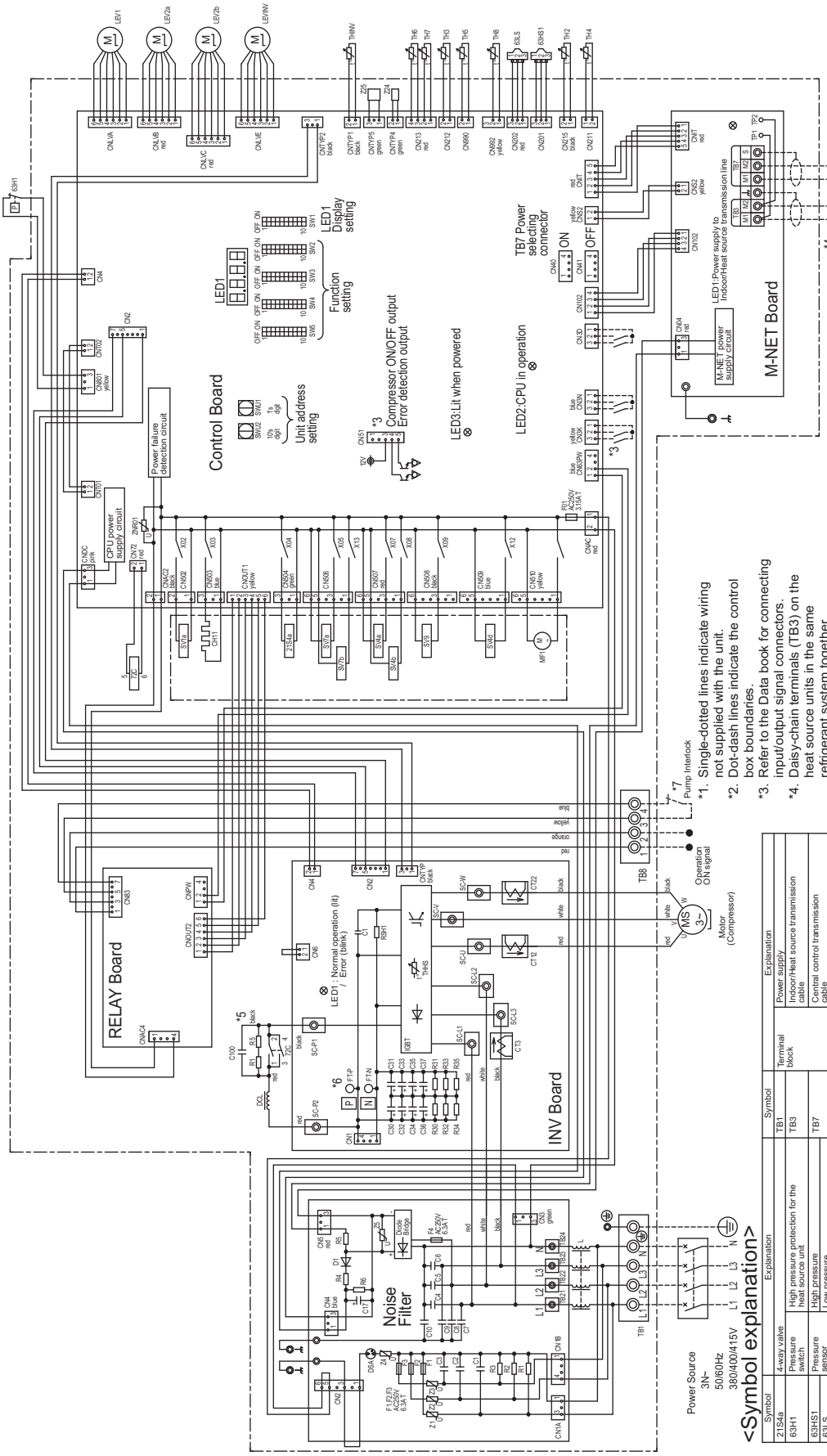

*1. Single-dotted lines indicate wiring not supplied with the unit.
*2. Dot-dash lines indicate the control box boundaries.
*3. Refer to the Data book for connecting input/output signal connectors.
*4. Daisy-chain terminals (TB3) on the heat source units in the same refrigerant system together.
*5. Faston terminals have a locking function. Make sure the terminals are securely locked in place after insertion. Press the tab on the terminals to removed them.
*6. Control box houses high-voltage parts. Before inspecting the inside of the control box, turn off the power, keep the unit off for at least 10 minutes, and confirm that the voltage between FT-P and FT-N on INV Board has dropped to 20VDC or less.
*7. Refer to the Data book for wiring terminal block for Pump Interlock (TB8).

<Symbol explanation>

Symbol	Explanation	Symbol	Explanation
21S4a	4-way valve	TB1	Power supply
63H1	High pressure protection for the heat source unit; Pressure switch	TB3	Indoor/Heat source transmission cable
63HS1	Pressure sensor	TB7	Central control transmission cable
63LS	Low pressure	TB8	Operation ON signal, Pump Interlock
72C	Magnetic relay (Inverter main circuit)	TH2	Subcool bypass outlet temperature
CT12, 22, 3	Current sensor (AC)	TH3	Pipe temperature
CH11	Crankcase heater (for heating the compressor)	TH4	Discharge pipe temperature
DCL	DC reactor	TH5	AC inlet pipe temperature
LEV1	HIC bypass; Controls refrigerant flow in HIC circuit; Linear electronic expansion valve	TH6	Supercooled liquid refrigerant temperature
LEV2a, b	Pressure control; Refrigerant flow rate control	TH7	Water inlet temperature
LEVINV	Heat exchanger for inverter	TH8	Water outlet temperature
MF1	Fan motor (Radiator panel)	THINV	Outlet temp. detect of heat exchanger for inverter
SV1a	Solenoid valve; For opening/closing the bypass circuit under the OIS	THHS	IGBT temperature
SV4a, b, d	Heat exchanger capacity control	Z24, 25	Function setting connector
SV7a, b	Heat exchanger capacity control		
SV9	For opening/closing the bypass circuit		

Measurement condition
PQHY-P650, 700, 750, 800, 850YSHM-A

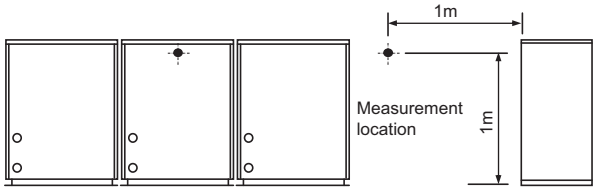

Sound level of PQHY-P750YSHM-A(-BS)

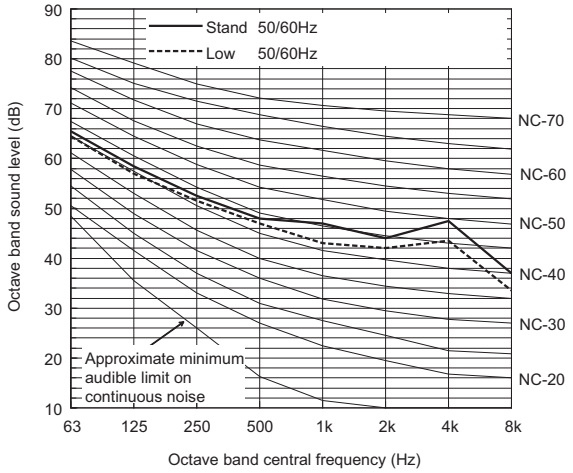

		63	125	250	500	1k	2k	4k	8k	dB(A)
Standard	50/60Hz	65.5	58.5	52.5	48.0	47.0	44.0	47.5	37.0	54.0
Low noise mode	50/60Hz	64.5	57.0	51.5	47.0	43.0	42.0	43.5	33.5	51.5

When Low noise mode is set,the A/C system's capacity is limited. The system could return to normal operation from Low noise mode automatically in the case that the operation condition is severe.

Sound level of PQHY-P650YSHM-A(-BS)

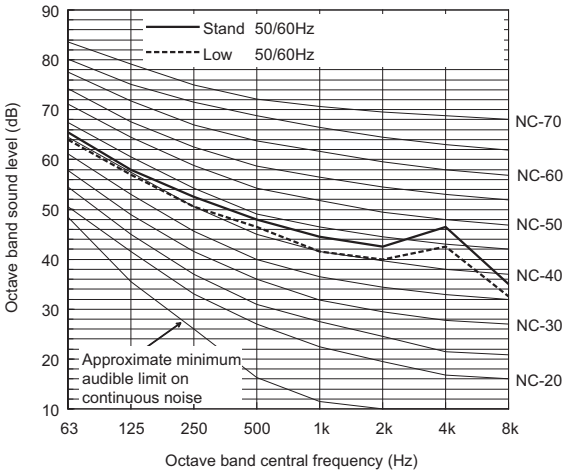

		63	125	250	500	1k	2k	4k	8k	dB(A)
Standard	50/60Hz	65.5	58.0	52.5	48.0	44.5	42.5	46.5	35.0	53.0
Low noise mode	50/60Hz	64.0	57.0	50.5	46.5	41.5	40.0	42.5	32.5	50.5

When Low noise mode is set,the A/C system's capacity is limited. The system could return to normal operation from Low noise mode automatically in the case that the operation condition is severe.

Sound level of PQHY-P800YSHM-A(-BS)

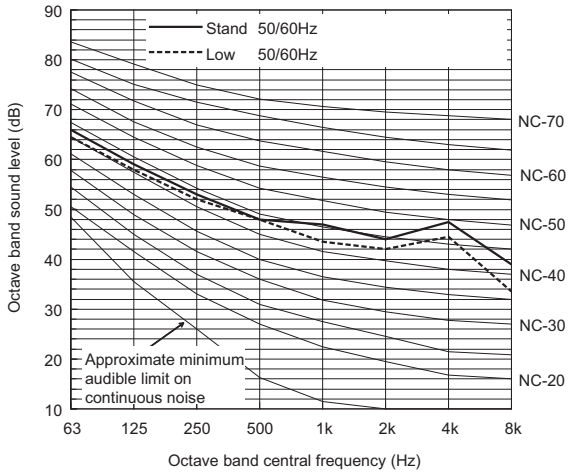

		63	125	250	500	1k	2k	4k	8k	dB(A)
Standard	50/60Hz	66.0	59.0	53.0	48.0	47.0	44.0	47.5	39.0	54.0
Low noise mode	50/60Hz	64.5	58.0	52.0	48.0	43.5	42.0	44.5	33.5	52.0

When Low noise mode is set,the A/C system's capacity is limited. The system could return to normal operation from Low noise mode automatically in the case that the operation condition is severe.

Sound level of PQHY-P700YSHM-A(-BS)

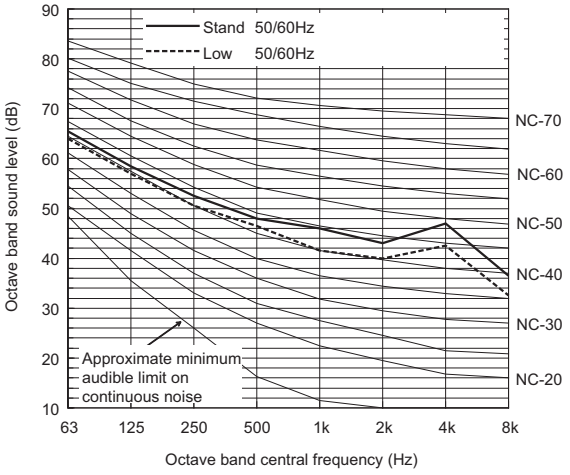

		63	125	250	500	1k	2k	4k	8k	dB(A)
Standard	50/60Hz	65.5	58.5	52.5	48.0	46.0	43.0	47.0	36.5	53.5
Low noise mode	50/60Hz	64.0	57.0	50.5	46.5	41.5	40.0	42.5	32.5	50.5

When Low noise mode is set,the A/C system's capacity is limited. The system could return to normal operation from Low noise mode automatically in the case that the operation condition is severe.

Sound level of PQHY-P850YSHM-A(-BS)

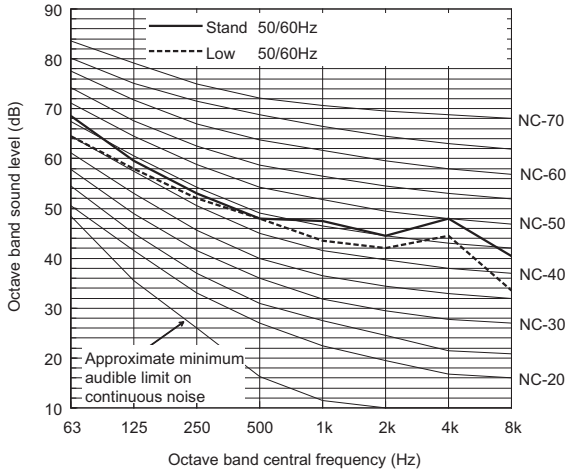

		63	125	250	500	1k	2k	4k	8k	dB(A)
Standard	50/60Hz	68.5	59.5	53.0	48.0	47.5	44.5	48.0	40.5	54.5
Low noise mode	50/60Hz	64.5	58.0	52.0	48.0	43.5	42.0	44.5	33.5	52.0

When Low noise mode is set,the A/C system's capacity is limited. The system could return to normal operation from Low noise mode automatically in the case that the operation condition is severe.

5. SOUND LEVELS

Measurement condition
PQHY-P900YSHM-A

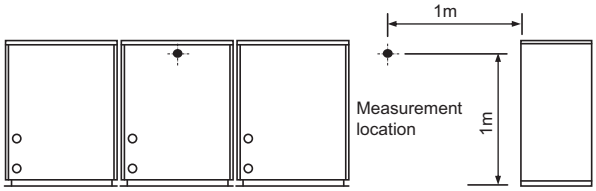

Sound level of PQHY-P900YSHM-A(-BS)

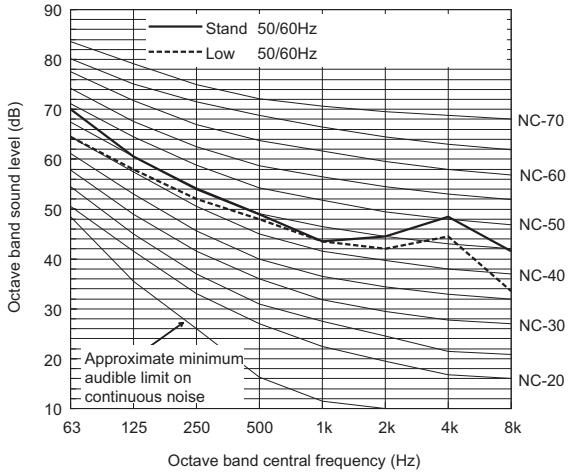

		63	125	250	500	1k	2k	4k	8k	dB(A)
Standard	50/60Hz	70.0	60.5	54.0	49.0	43.5	44.5	48.5	41.5	55.0
Low noise mode	50/60Hz	64.5	58.0	52.0	48.0	43.5	42.0	44.5	33.5	52.0

When Low noise mode is set,the A/C system's capacity is limited. The system could return to normal operation from Low noise mode automatically in the case that the operation condition is severe.

6. CAPACITY TABLES

6-1. Correction by temperature

CITY MULTI could have various capacities at different designing temperatures. Using the nominal cooling/heating capacity values and the ratios below, the capacity can be found for various temperatures.

		PQHY-P650YSHM-A
Nominal Cooling Capacity	kW	73.0
	BTU/h	249,100
Input	kW	13.96

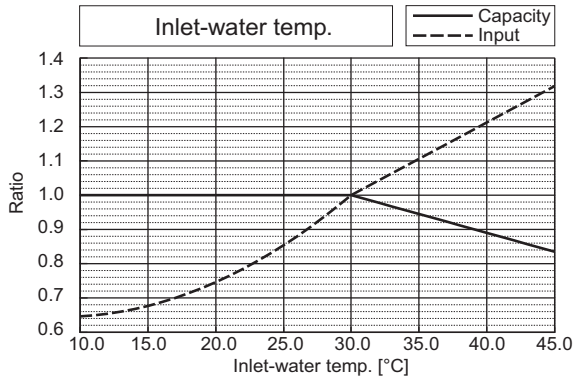

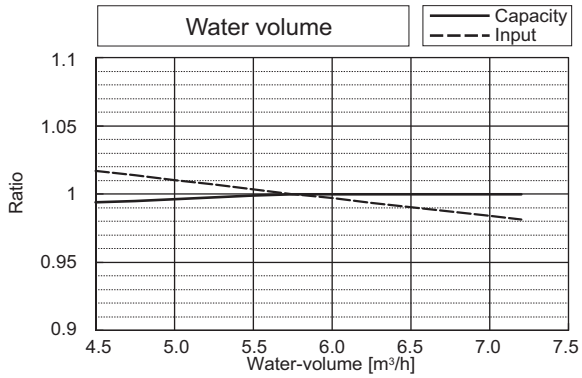

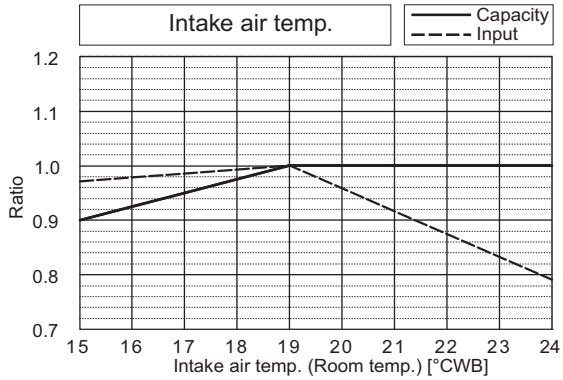

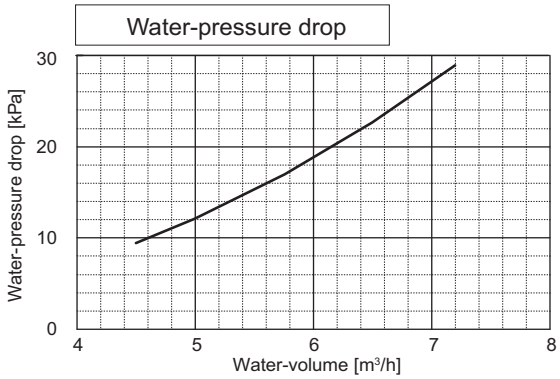

		PQHY-P650YSHM-A
Nominal Heating Capacity	kW	81.5
	BTU/h	278,100
Input	kW	14.74

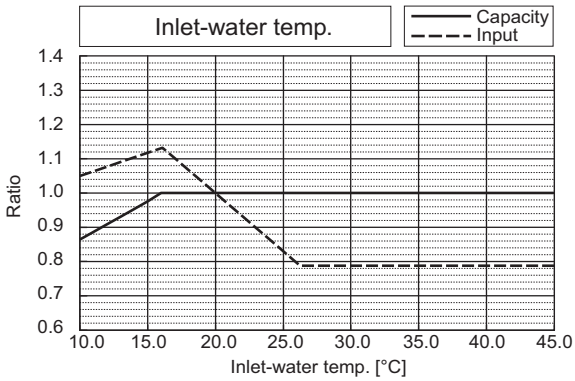

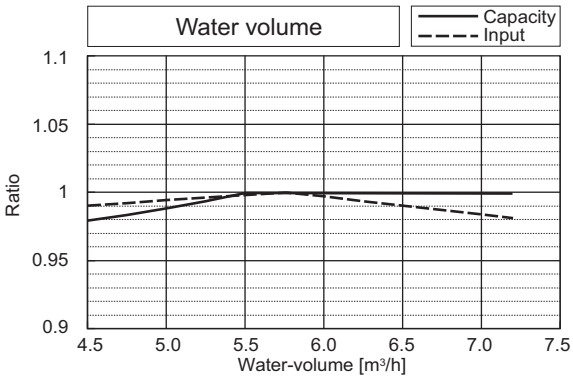

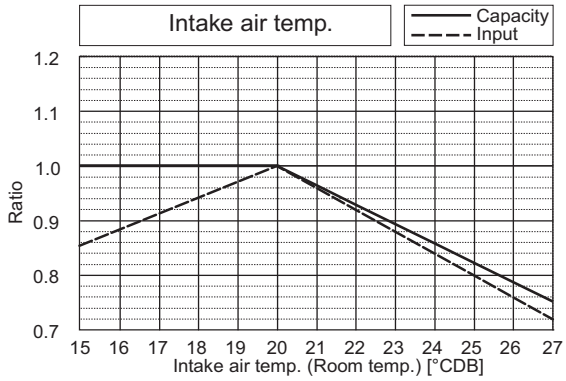

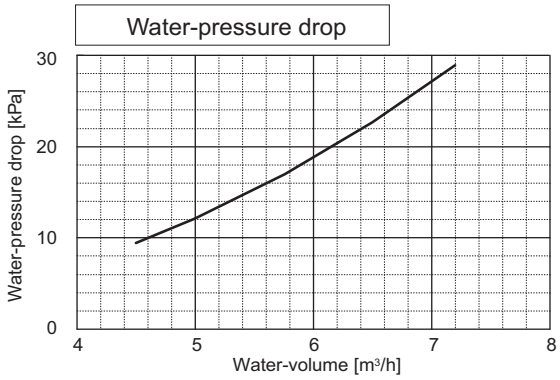

6. CAPACITY TABLES

		PQHY-P700YSHM-A
Nominal Cooling Capacity	kW	80.0
	BTU/h	273,000
Input	kW	15.58

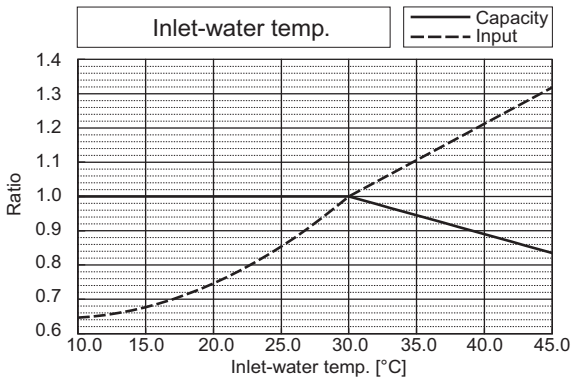

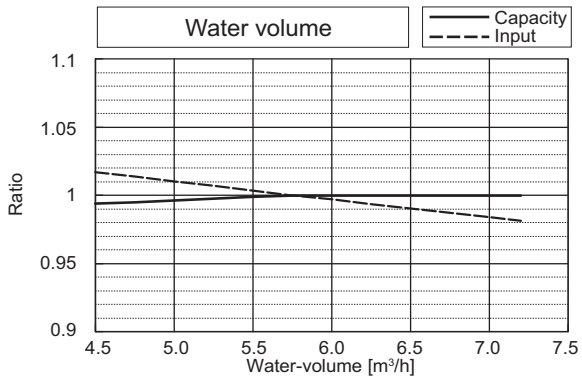

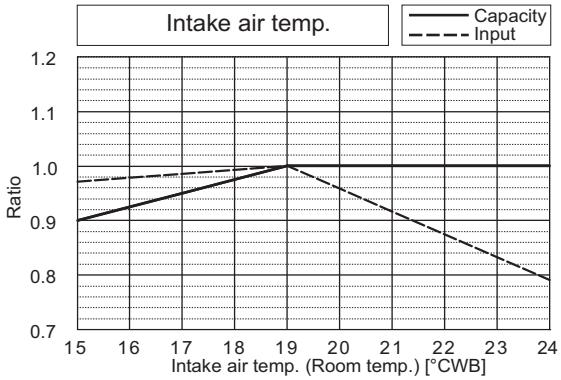

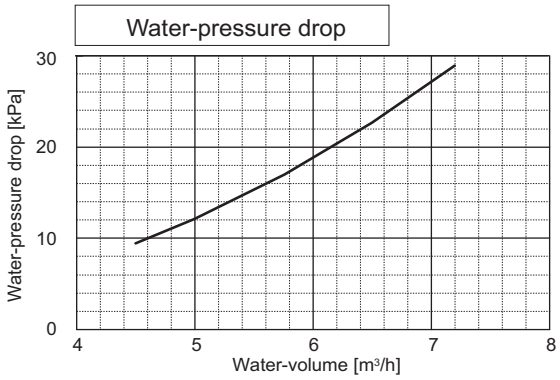

		PQHY-P700YSHM-A
Nominal Heating Capacity	kW	88.0
	BTU/h	300,300
Input	kW	16.51

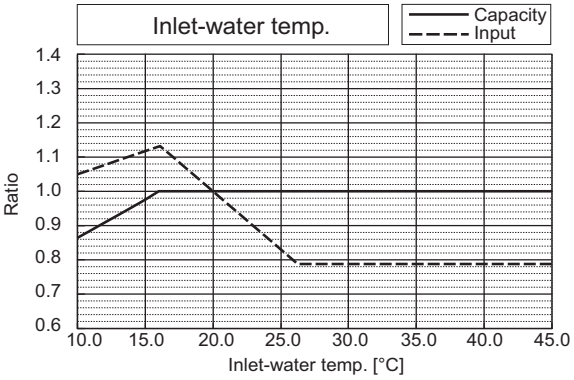

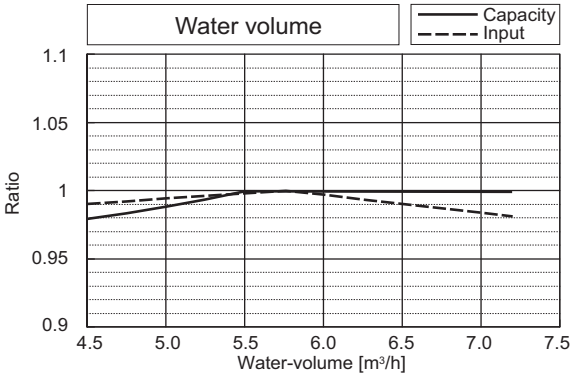

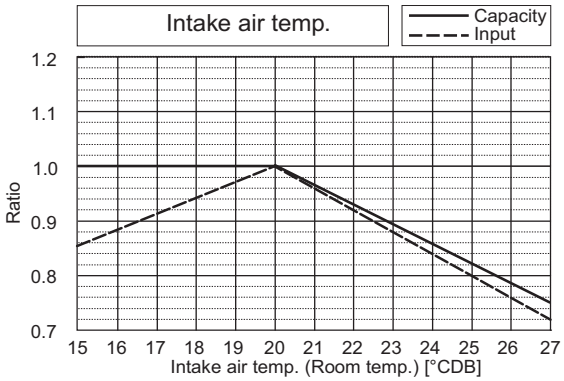

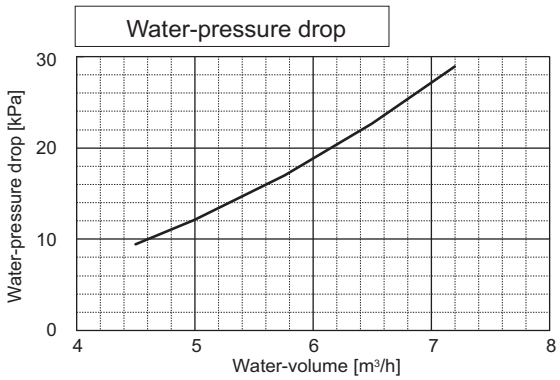

		PQHY-P750YSHM-A
Nominal Cooling Capacity	kW	85.0
	BTU/h	290,000
Input	kW	17.19

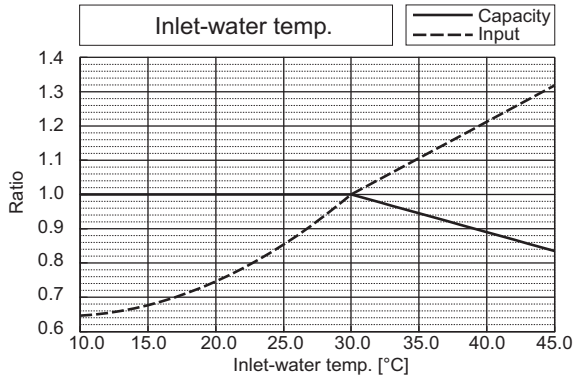

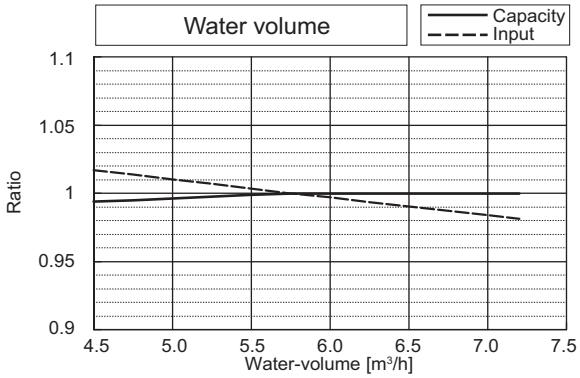

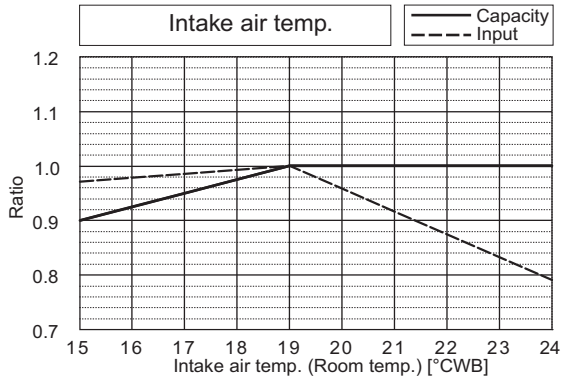

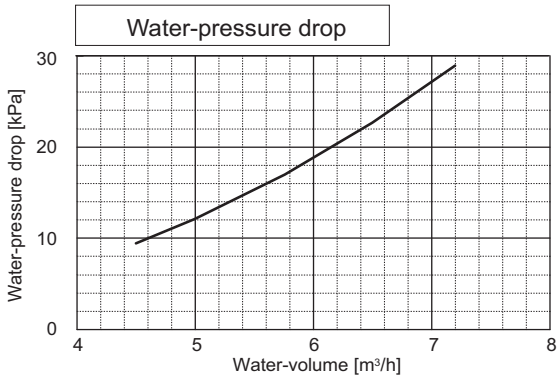

		PQHY-P750YSHM-A
Nominal Heating Capacity	kW	95.0
	BTU/h	324,100
Input	kW	18.27

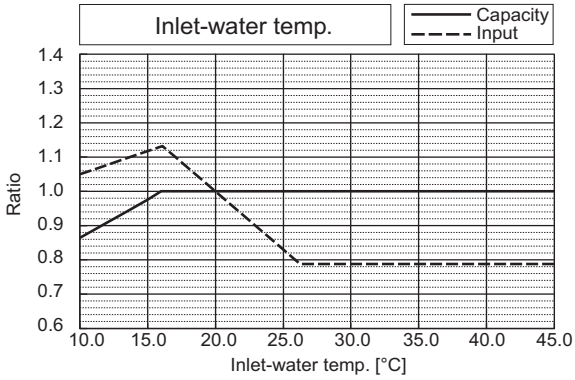

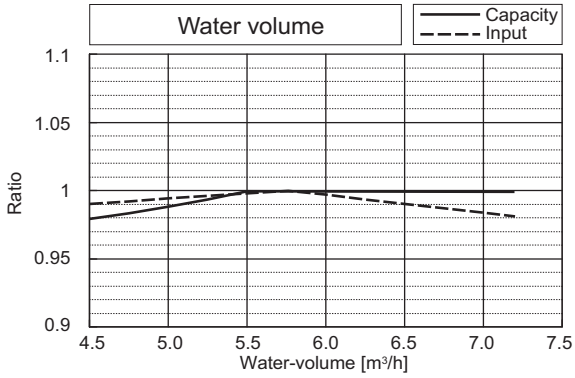

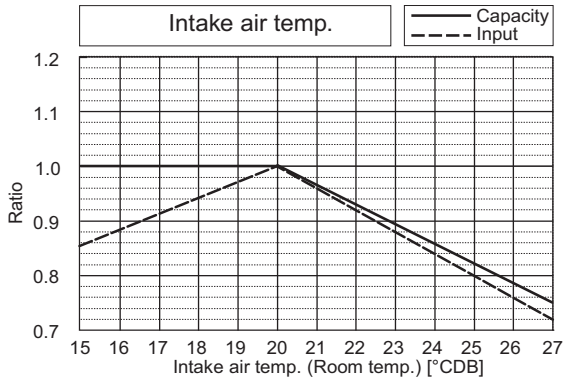

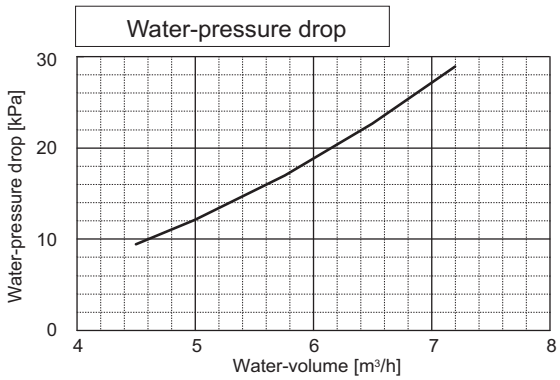

		PQHY-P800YSHM-A
Nominal Cooling Capacity	kW	90.0
	BTU/h	307,100
Input	kW	19.18

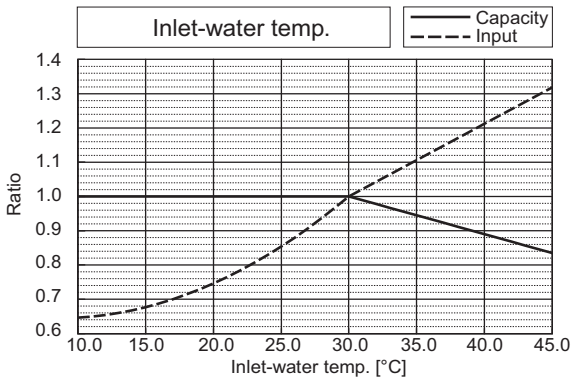

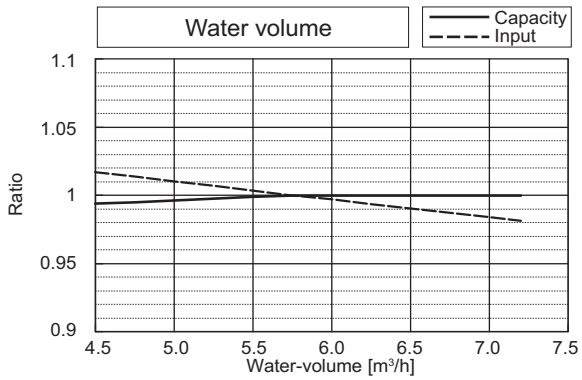

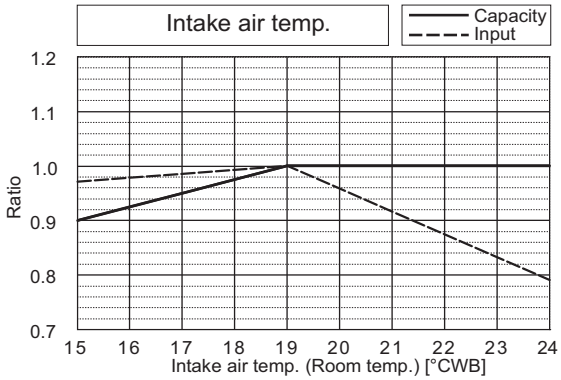

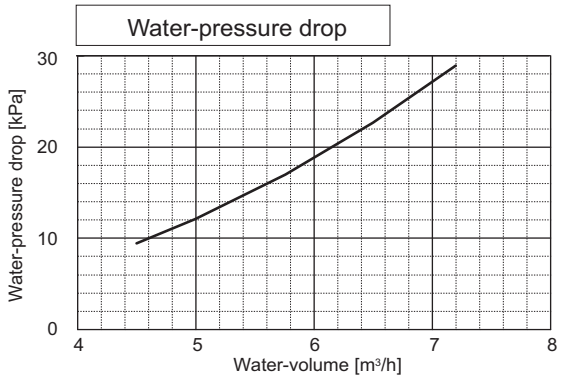

		PQHY-P800YSHM-A
Nominal Heating Capacity	kW	100.0
	BTU/h	341,200
Input	kW	20.74

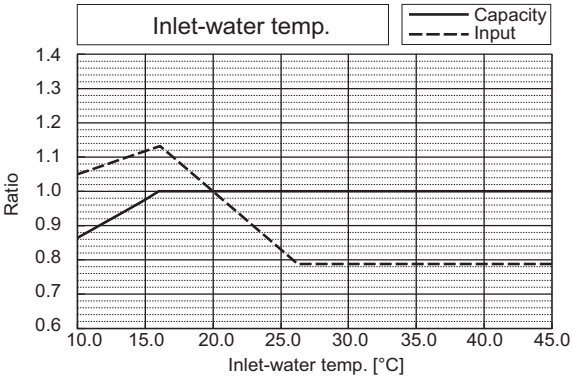

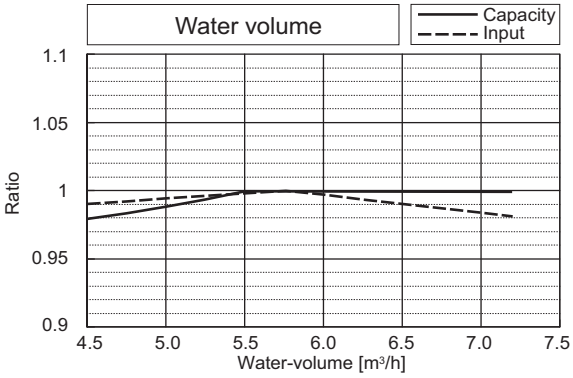

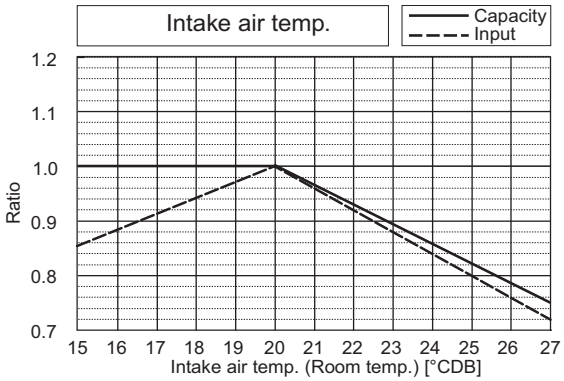

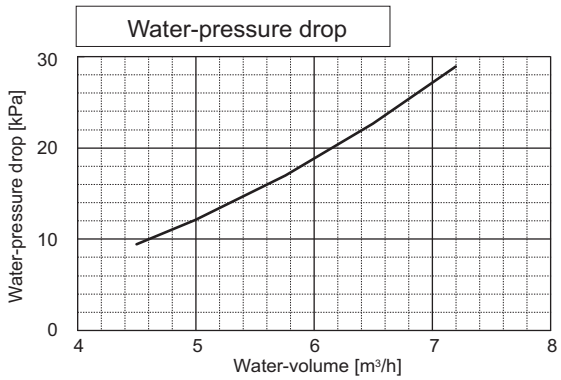

		PQHY-P850YSHM-A
Nominal Cooling Capacity	kW	96.0
	BTU/h	327,600
Input	kW	21.20

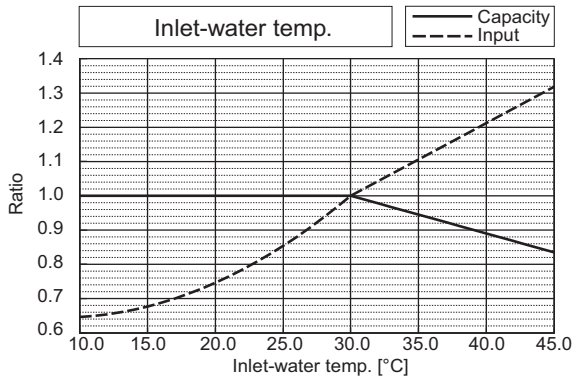

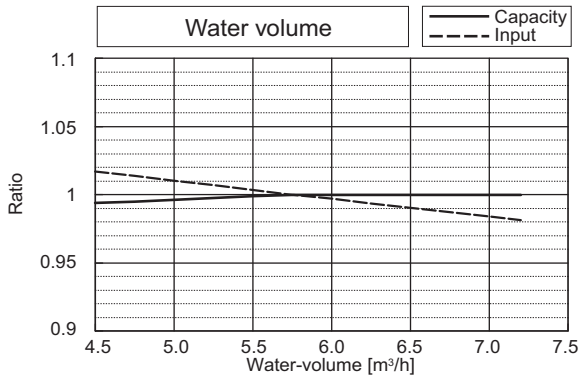

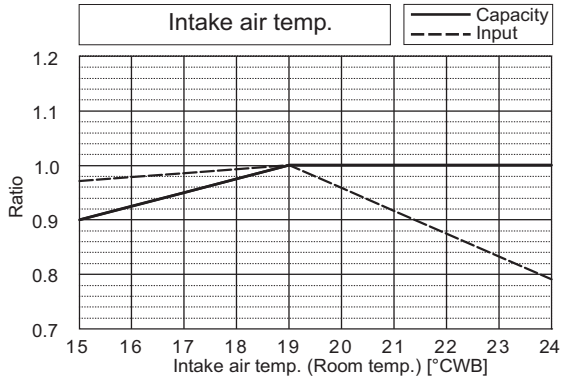

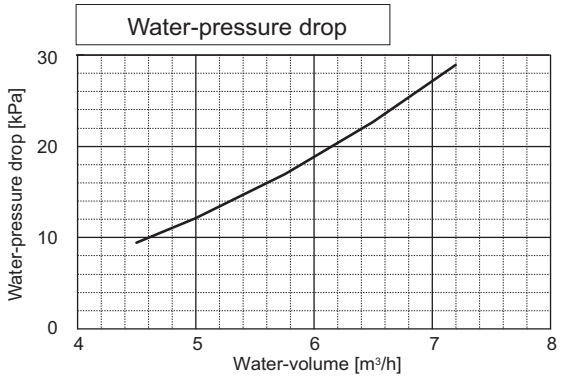

		PQHY-P850YSHM-A
Nominal Heating Capacity	kW	108.0
	BTU/h	368,500
Input	kW	23.21

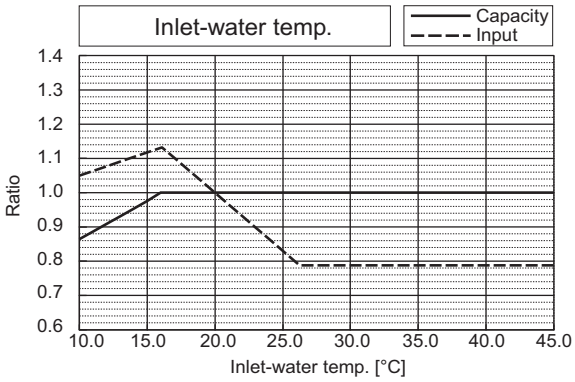

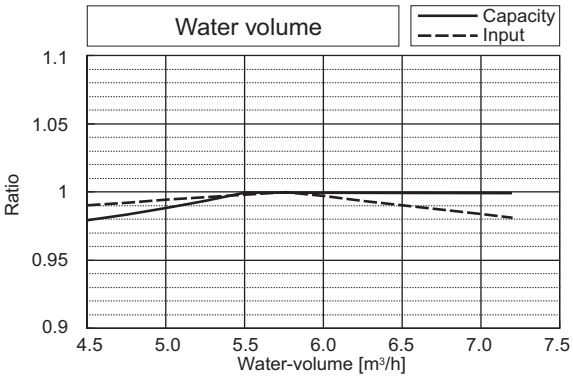

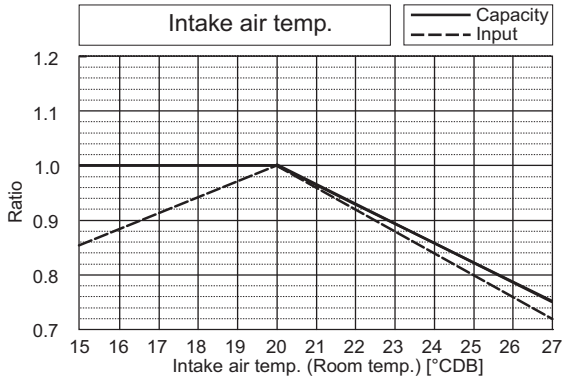

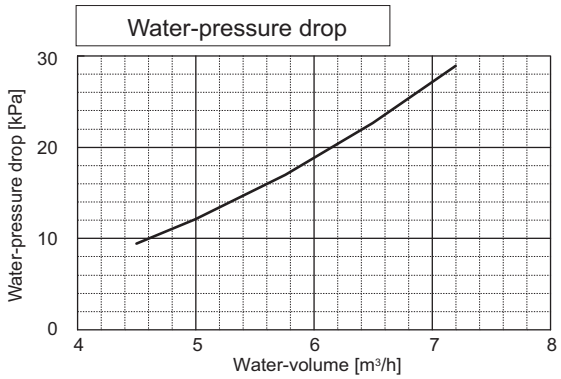

6. CAPACITY TABLES

		PQHY-P900YSHM-A
Nominal Cooling Capacity	kW	101.0
	BTU/h	344,600
Input	kW	23.22

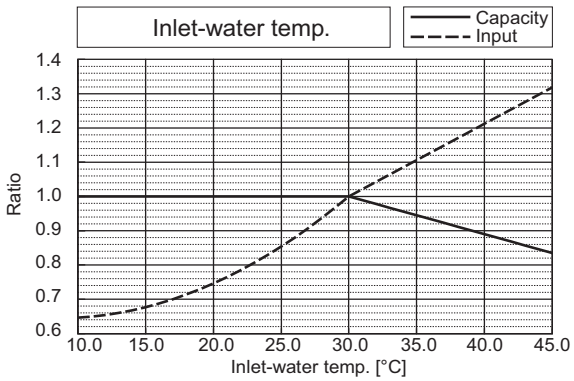

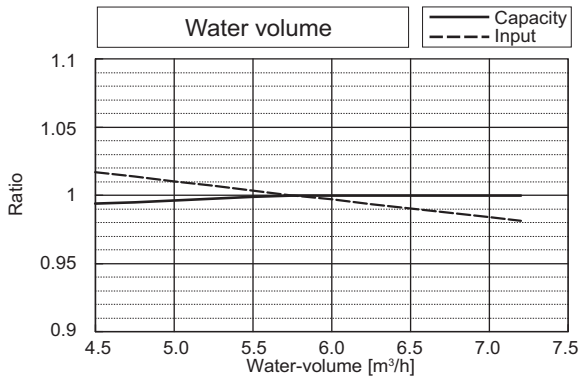

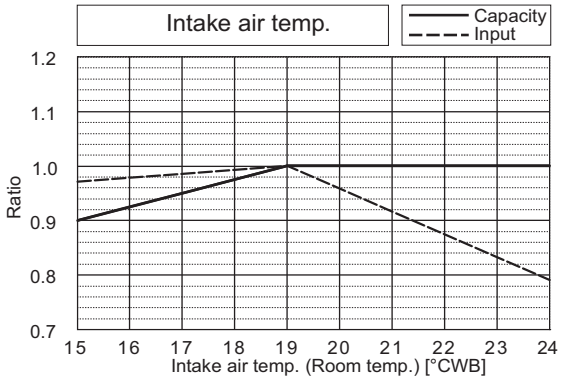

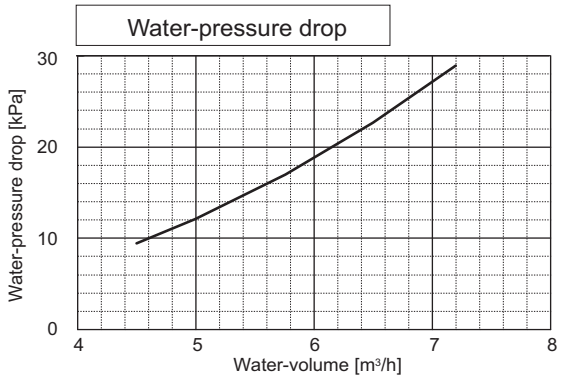

		PQHY-P900YSHM-A
Nominal Heating Capacity	kW	113.0
	BTU/h	385,600
Input	kW	25.67

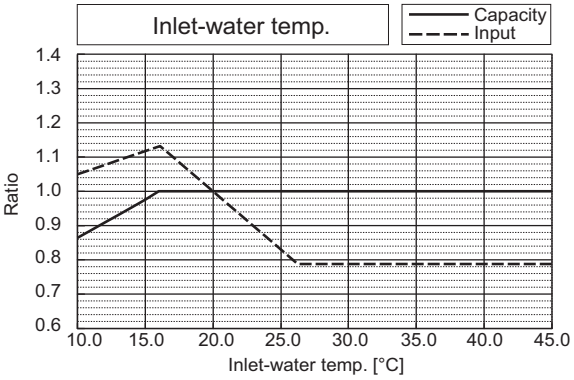

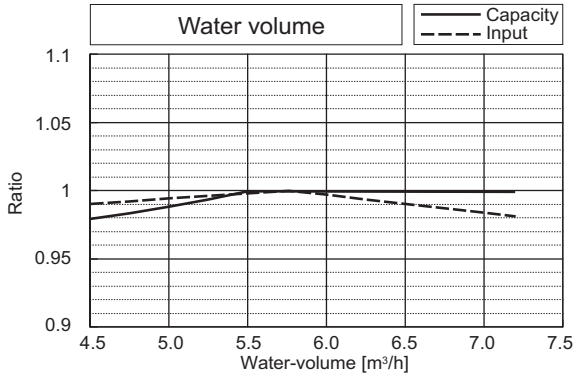

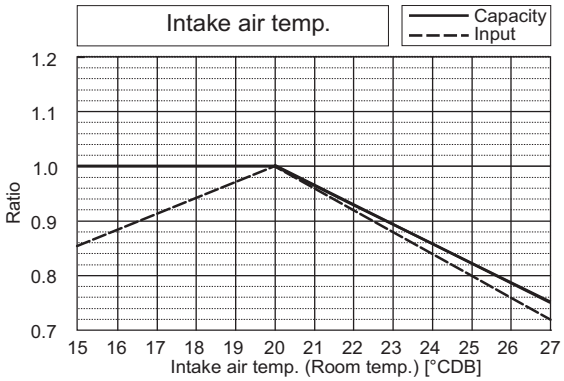

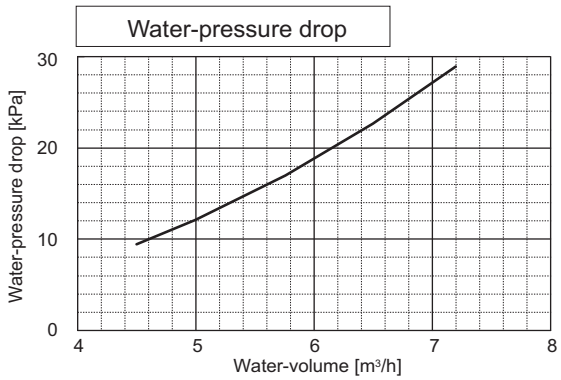

6-2. Correction by total indoor

CITY MULTI system have different capacities and inputs when many combinations of indoor units with different total capacities are connected. Using following tables, the maximum capacity can be found to ensure the system is installed with enough capacity for a particular application.

PQHY-P650YSHM-A

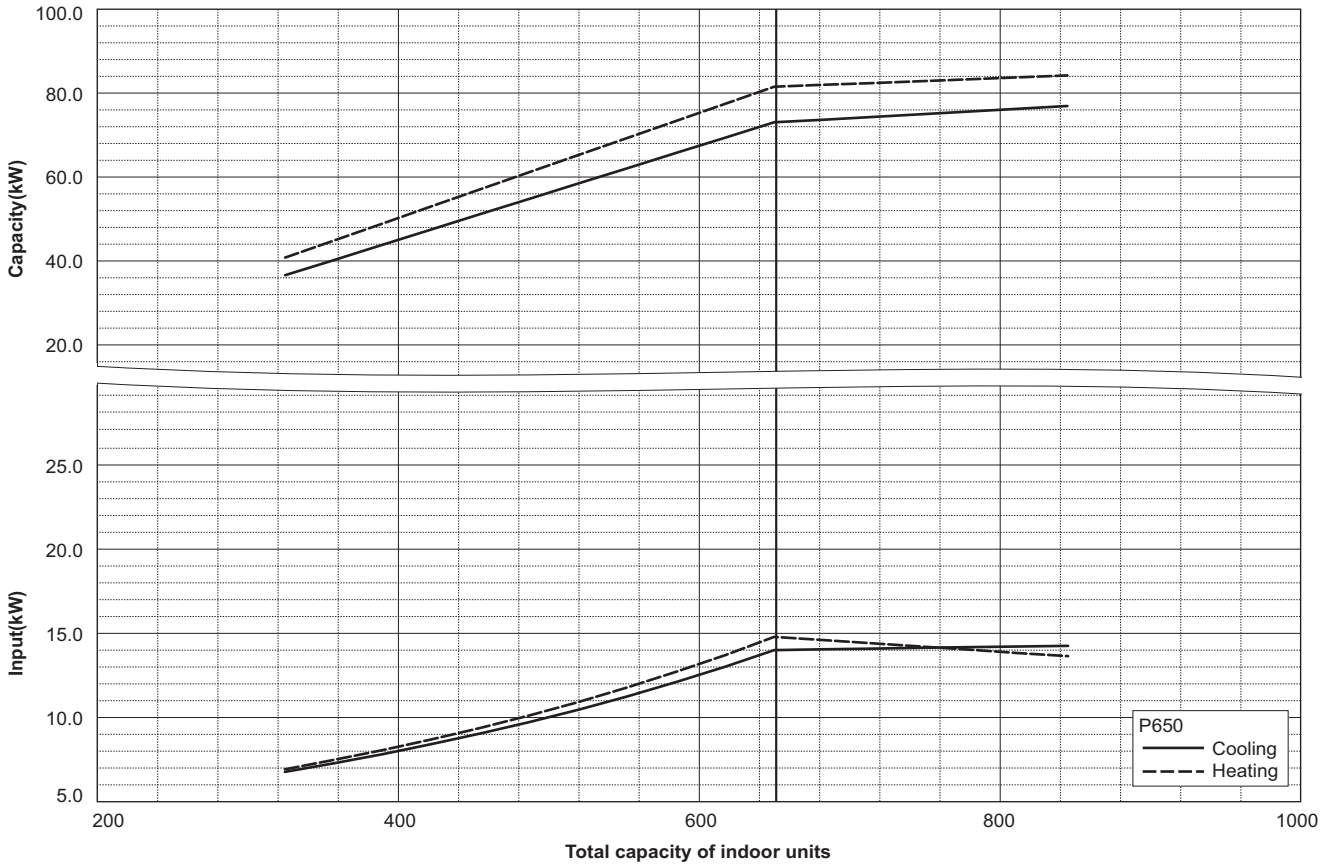

PQHY-P700YSHM-A

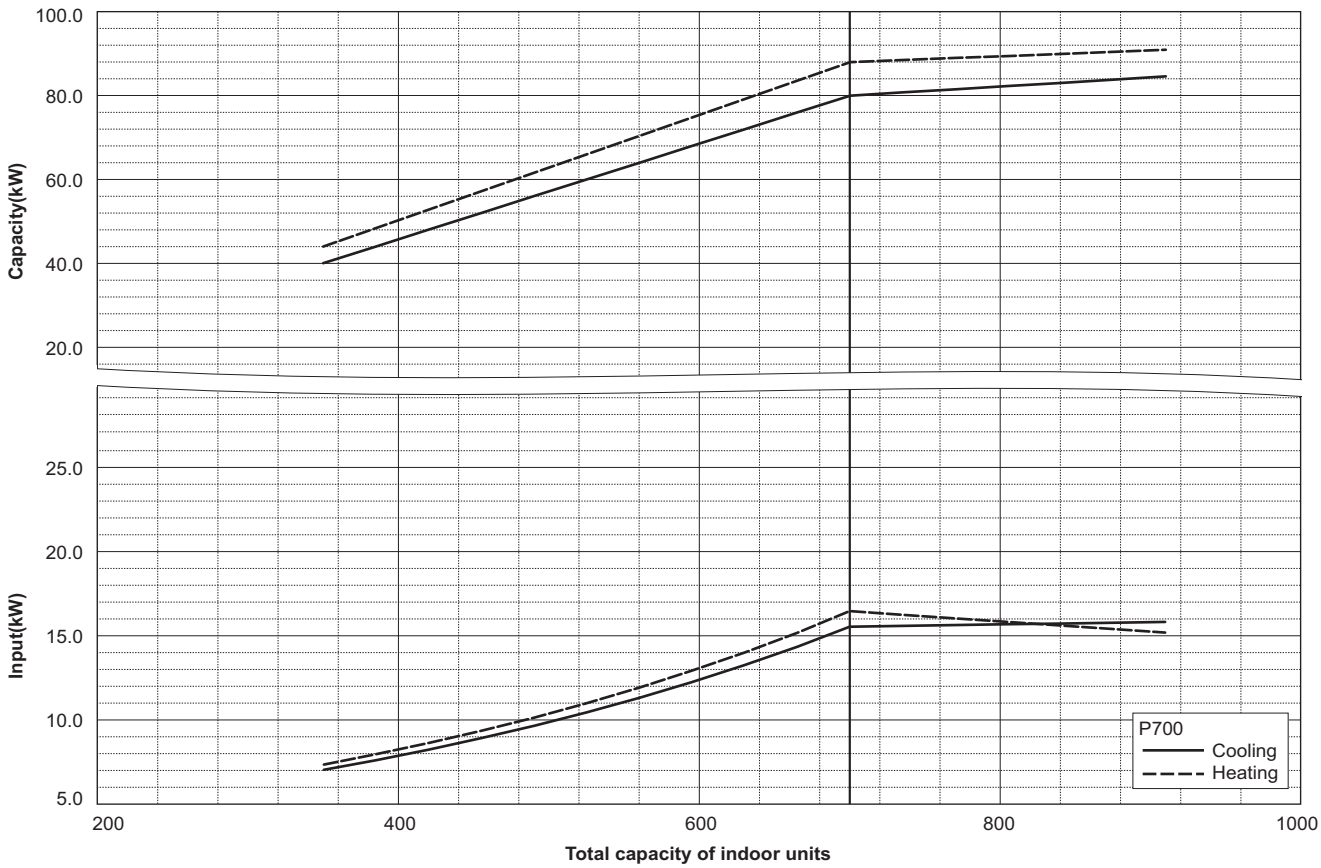

PQHY-P750YSHM-A

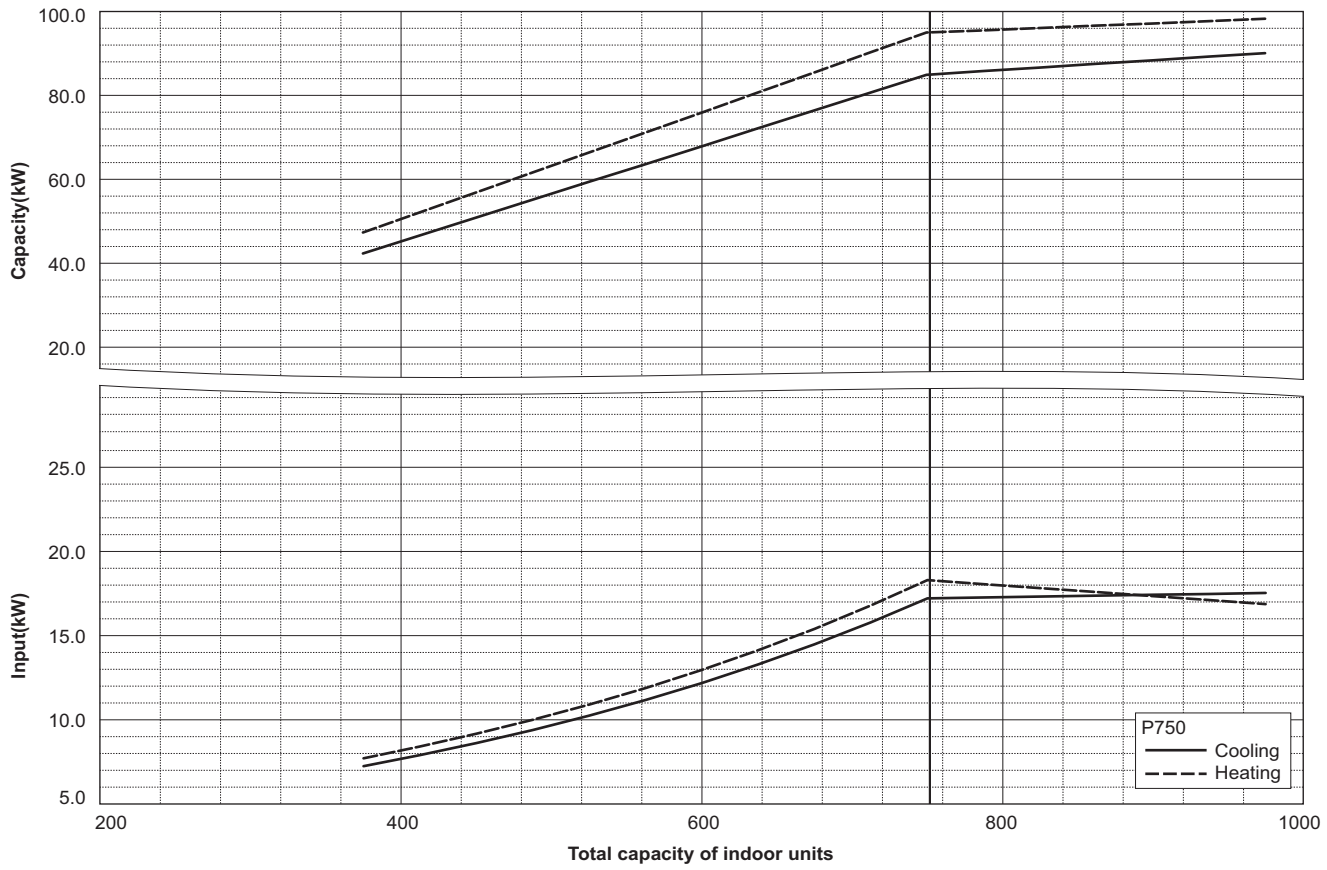

PQHY-P800YSHM-A

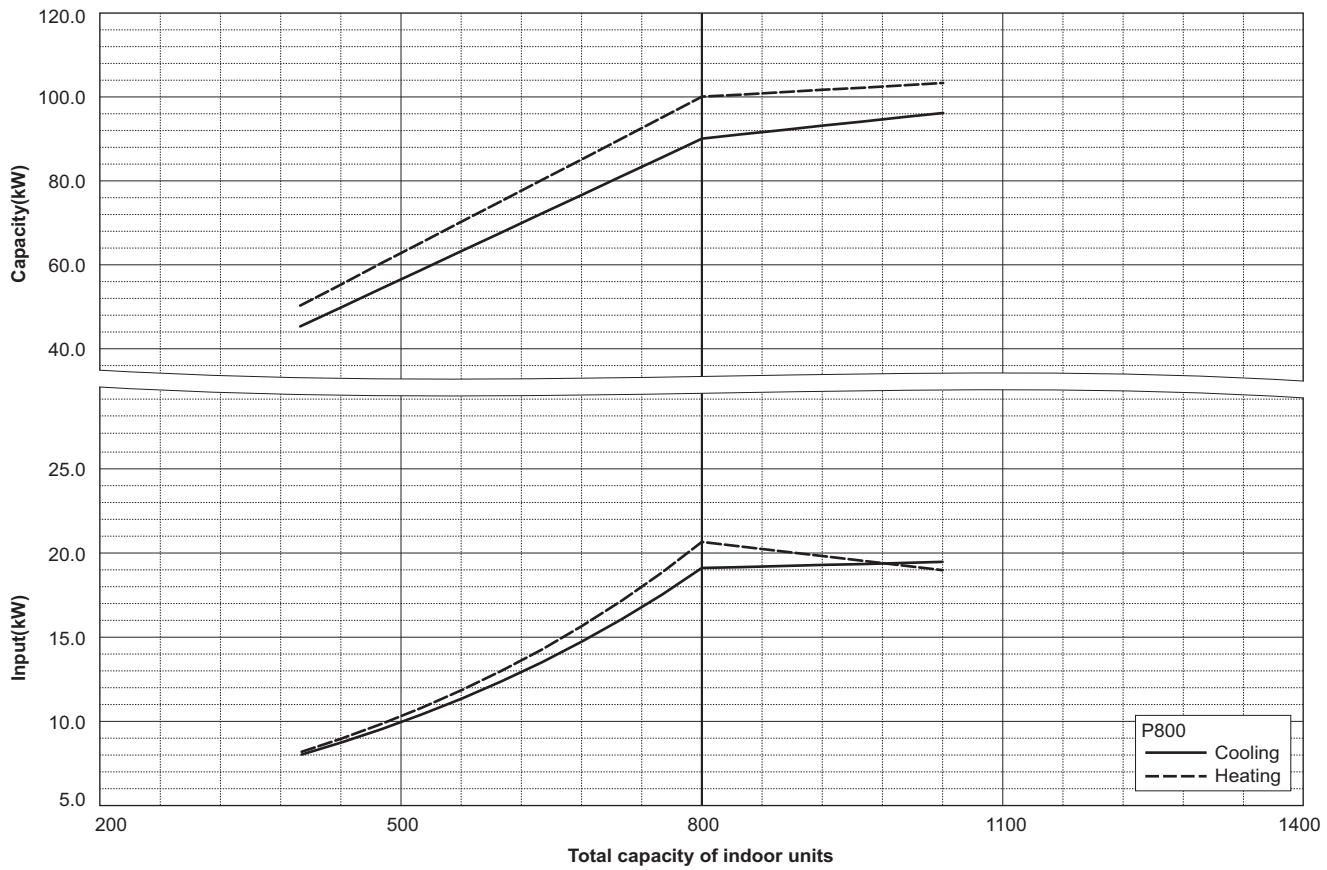

PQHY-P850YSHM-A

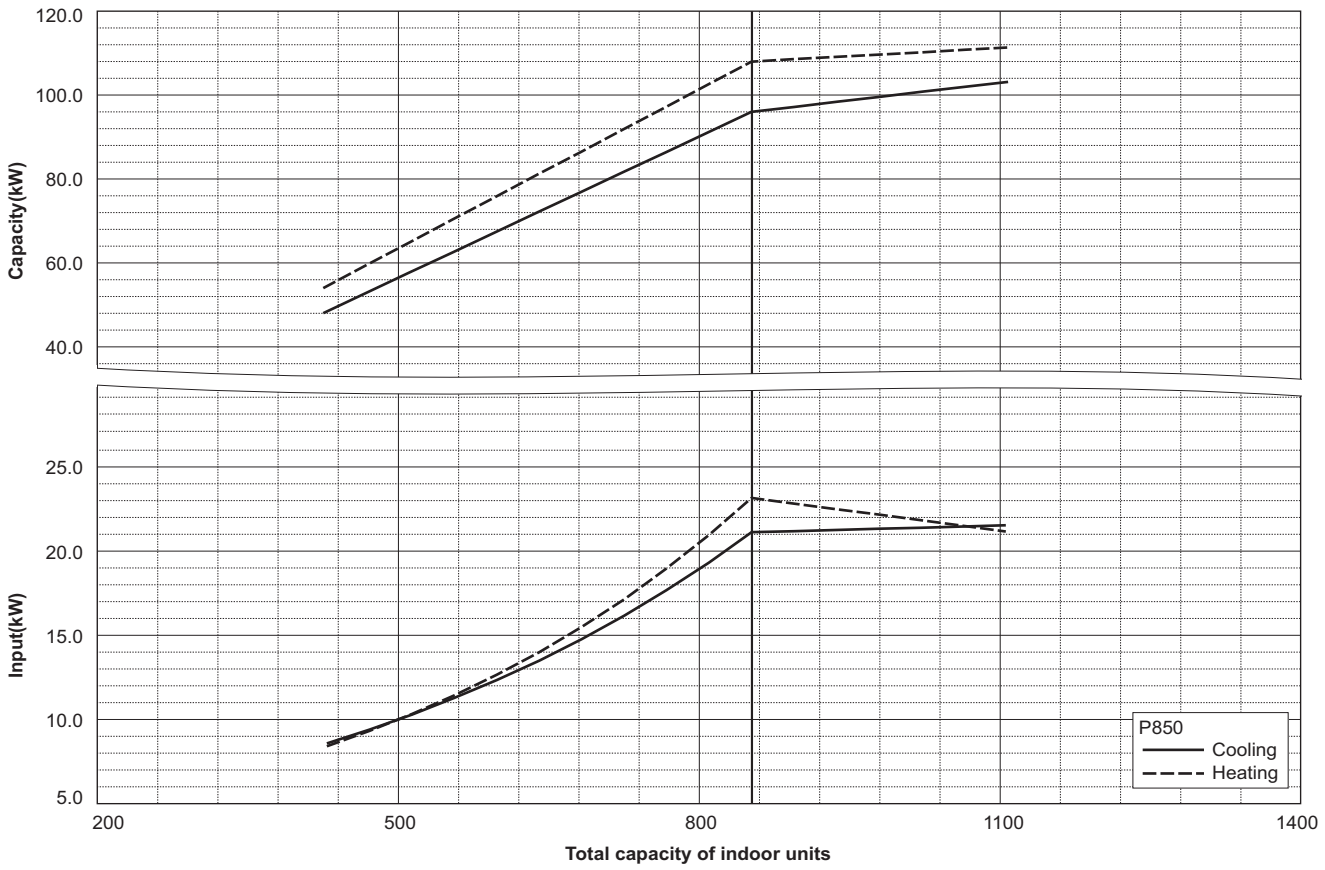

PQHY-P900YSHM-A

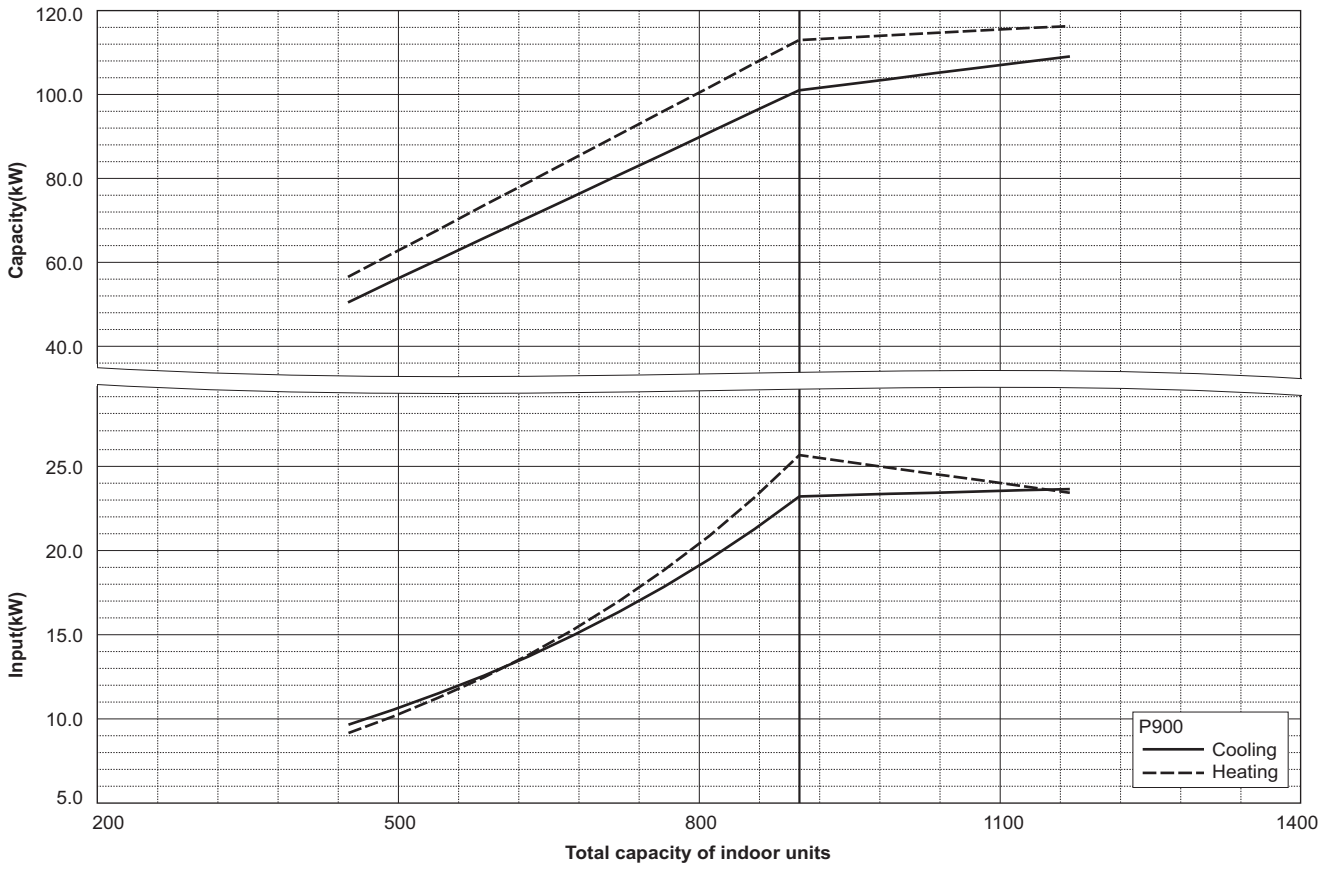

6-3. Correction by refrigerant piping length

CITY MULTI systems can have extended piping lengths if certain limitations are followed, but cooling/heating capacity could be reduced. Using following correction factor by equivalent piping length shown at 6-3-1 and 6-3-2, capacity can be found. 6-3-3 shows how to obtain the equivalent piping length.

6-3-1. Cooling capacity correction

PQHY-P650YSHM-A

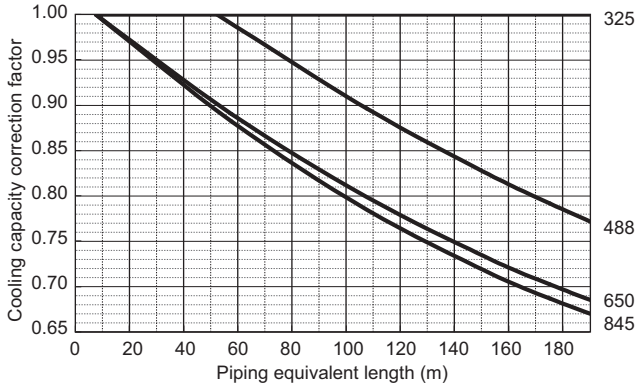

PQHY-P900YSHM-A

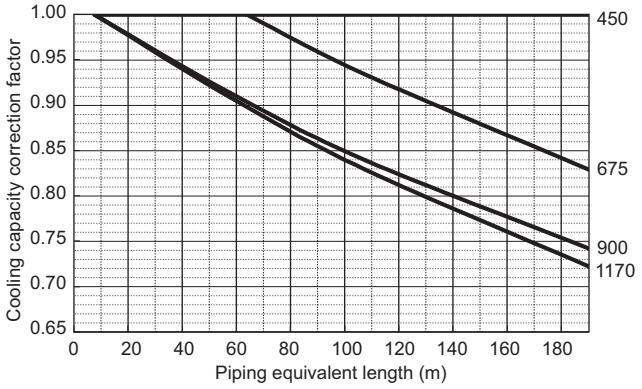

PQHY-P700, 750YSHM-A

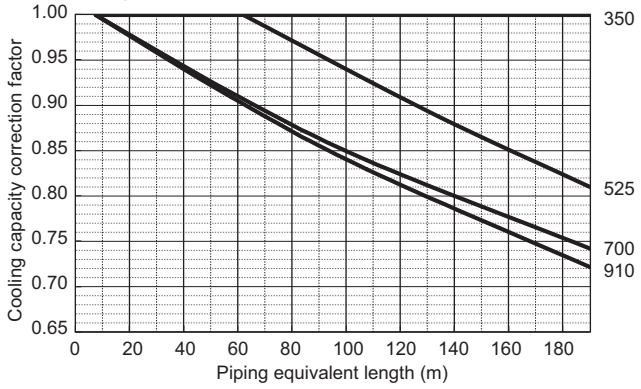

PQHY-P800YSHM-A

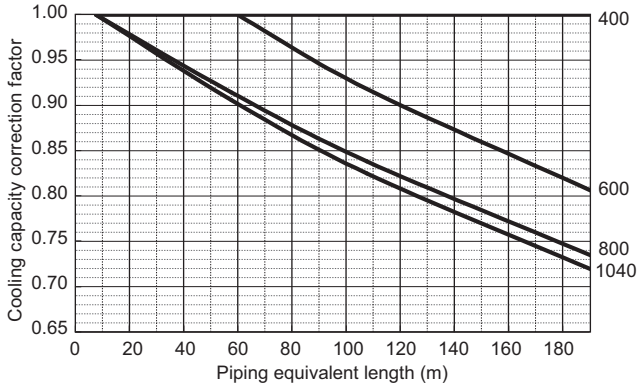

PQHY-P850YSHM-A

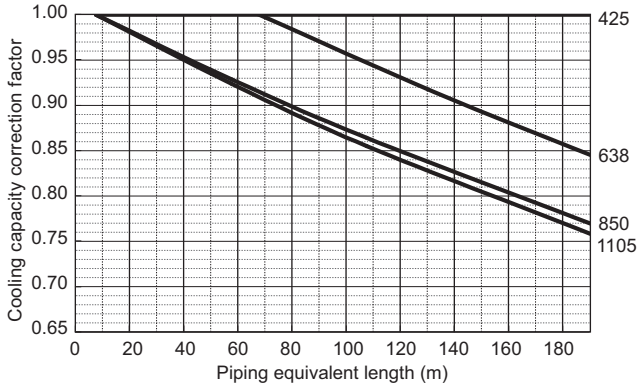

6-3-2. Heating capacity correction

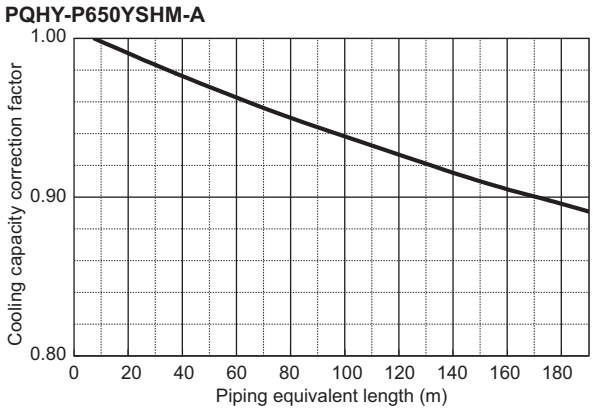

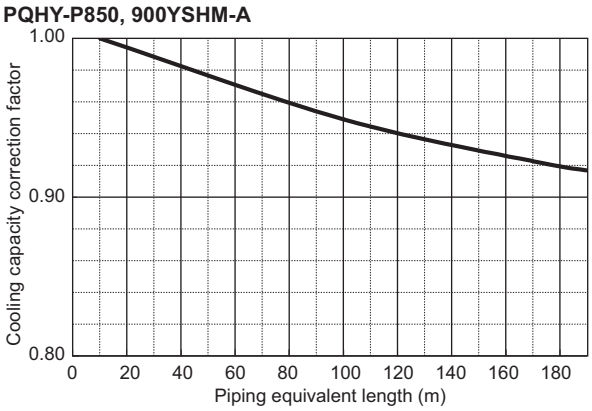

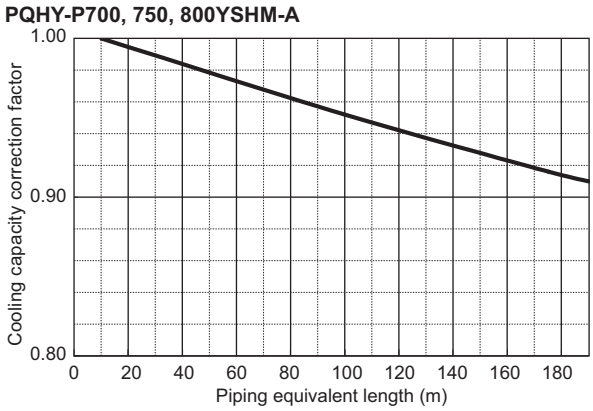

6-3-3. How to obtain the equivalent piping length

1 **PQHY-P200YHM**
Equivalent length = (Actual piping length to the farthest indoor unit) + (0.35 x number of bends in the piping) m

2 **PQHY-P250, 300YHM**
Equivalent length = (Actual piping length to the farthest indoor unit) + (0.42 x number of bends in the piping) m

3 **PQHY-P400, 450, 500, 550, 600, 650YSHM**
Equivalent length = (Actual piping length to the farthest indoor unit) + (0.50 x number of bends in the piping) m

4 **PQHY-P700, 750, 800YSHM**
Equivalent length = (Actual piping length to the farthest indoor unit) + (0.70 x number of bends in the piping) m

5 **PQHY-P850, 900YSHM**
Equivalent length = (Actual piping length to the farthest indoor unit) + (0.80 x number of bends in the piping) m

6-4. Operation temperature range

• **Cooling**

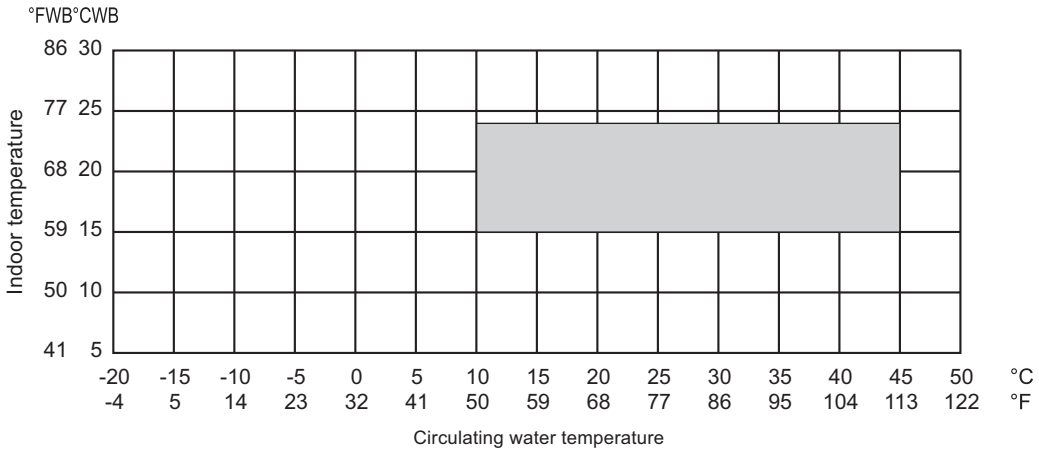

• **Heating**

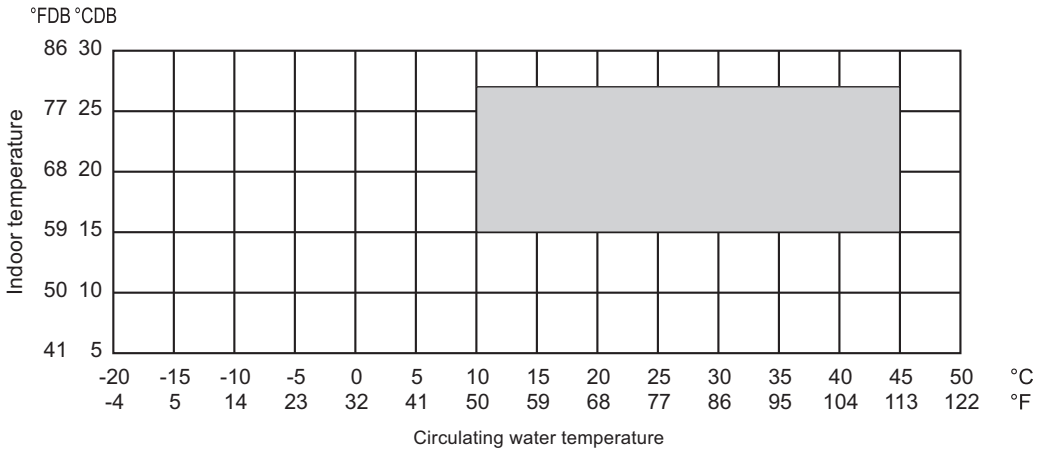

7.CAPACITY TABLES (Indoor unit)

A1. Cooling capacity with PQHY-P650-900YSHM

PEFY-P-VMH-E

CA : Capacity(kW) SHC : Sensible Heat Capacity(kW)

Model size (Rated kW)	Water temp.		Indoor air temp.													
			71 ˚FDB / 59˚FWB		73˚FDB / 61˚FWB		77˚FDB / 64˚FWB		81˚FDB / 66˚FWB		82˚FDB / 68˚FWB		86˚FDB / 72˚FWB		90˚FDB / 75˚FWB	
			21.5˚CDB / 15˚CWB		23˚CDB / 16˚CWB		25˚CDB / 18˚CWB		27˚CDB / 19˚CWB		28˚CDB / 20˚CWB		30˚CDB / 22˚CWB		32˚CDB / 24˚CWB	
	˚F	˚C	CA	SHC	CA	SHC	CA	SHC	CA	SHC	CA	SHC	CA	SHC	CA	SHC
40 (4.5)	50	10.0	4.1	3.1	4.2	3.2	4.4	3.2	4.5	3.4	4.5	3.3	4.5	3.2	4.5	3.0
	68	20.0	4.1	3.1	4.2	3.2	4.4	3.2	4.5	3.4	4.5	3.3	4.5	3.2	4.5	3.0
	86	30.0	4.1	3.1	4.2	3.2	4.4	3.2	4.5	3.4	4.5	3.3	4.5	3.2	4.5	3.0
	104	40.0	3.6	2.9	3.7	3.0	3.9	3.0	4.0	3.2	4.0	3.1	4.0	3.0	4.0	2.9
	113	45.0	3.4	2.8	3.5	2.9	3.7	2.9	3.8	3.1	3.8	3.0	3.8	2.9	3.8	2.8
50 (5.6)	50	10.0	5.0	3.7	5.2	3.8	5.5	3.7	5.6	3.9	5.6	3.8	5.6	3.6	5.6	3.5
	68	20.0	5.0	3.7	5.2	3.8	5.5	3.7	5.6	3.9	5.6	3.8	5.6	3.6	5.6	3.5
	86	30.0	5.0	3.7	5.2	3.8	5.5	3.7	5.6	3.9	5.6	3.8	5.6	3.6	5.6	3.5
	104	40.0	4.5	3.4	4.6	3.5	4.9	3.4	5.0	3.6	5.0	3.6	5.0	3.4	5.0	3.2
	113	45.0	4.2	3.3	4.3	3.4	4.6	3.3	4.7	3.5	4.7	3.4	4.7	3.3	4.7	3.1
63 (7.1)	50	10.0	6.4	4.8	6.6	5.0	6.9	4.9	7.1	5.2	7.1	5.1	7.1	4.8	7.1	4.6
	68	20.0	6.4	4.8	6.6	5.0	6.9	4.9	7.1	5.2	7.1	5.1	7.1	4.8	7.1	4.6
	86	30.0	6.4	4.8	6.6	5.0	6.9	4.9	7.1	5.2	7.1	5.1	7.1	4.8	7.1	4.6
	104	40.0	5.7	4.5	5.8	4.6	6.2	4.6	6.3	4.9	6.3	4.7	6.3	4.5	6.3	4.4
	113	45.0	5.3	4.3	5.5	4.5	5.8	4.4	5.9	4.7	5.9	4.6	5.9	4.4	5.9	4.2
71 (8.0)	50	10.0	7.2	5.4	7.4	5.5	7.8	5.5	8.0	5.8	8.0	5.6	8.0	5.4	8.0	5.1
	68	20.0	7.2	5.4	7.4	5.5	7.8	5.5	8.0	5.8	8.0	5.6	8.0	5.4	8.0	5.1
	86	30.0	7.2	5.4	7.4	5.5	7.8	5.5	8.0	5.8	8.0	5.6	8.0	5.4	8.0	5.1
	104	40.0	6.4	5.0	6.6	5.2	6.9	5.1	7.1	5.4	7.1	5.3	7.1	5.1	7.1	4.8
	113	45.0	6.0	4.8	6.2	5.0	6.5	4.9	6.7	5.2	6.7	5.1	6.7	4.9	6.7	4.7
80 (9.0)	50	10.0	8.1	6.1	8.3	6.3	8.8	6.2	9.0	6.5	9.0	6.4	9.0	6.1	9.0	5.8
	68	20.0	8.1	6.1	8.3	6.3	8.8	6.2	9.0	6.5	9.0	6.4	9.0	6.1	9.0	5.8
	86	30.0	8.1	6.1	8.3	6.3	8.8	6.2	9.0	6.5	9.0	6.4	9.0	6.1	9.0	5.8
	104	40.0	7.2	5.7	7.4	5.8	7.8	5.8	8.0	6.1	8.0	6.0	8.0	5.7	8.0	5.5
	113	45.0	6.8	5.5	7.0	5.6	7.3	5.6	7.5	5.9	7.5	5.8	7.5	5.6	7.5	5.3
100 (11.2)	50	10.0	10.1	8.3	10.4	8.5	10.9	8.4	11.2	9.0	11.2	8.8	11.2	8.4	11.2	8.1
	68	20.0	10.1	8.3	10.4	8.5	10.9	8.4	11.2	9.0	11.2	8.8	11.2	8.4	11.2	8.1
	86	30.0	10.1	8.3	10.4	8.5	10.9	8.4	11.2	9.0	11.2	8.8	11.2	8.4	11.2	8.1
	104	40.0	9.0	7.7	9.2	8.0	9.7	7.9	10.0	8.5	10.0	8.3	10.0	8.0	10.0	7.7
	113	45.0	8.4	7.5	8.7	7.8	9.1	7.7	9.4	8.2	9.4	8.1	9.4	7.8	9.4	7.5
125 (14.0)	50	10.0	12.6	9.5	13.0	9.7	13.7	9.6	14.0	10.1	14.0	9.9	14.0	9.5	14.0	9.0
	68	20.0	12.6	9.5	13.0	9.7	13.7	9.6	14.0	10.1	14.0	9.9	14.0	9.5	14.0	9.0
	86	30.0	12.6	9.5	13.0	9.7	13.7	9.6	14.0	10.1	14.0	9.9	14.0	9.5	14.0	9.0
	104	40.0	11.2	8.8	11.5	9.1	12.1	8.9	12.5	9.5	12.5	9.3	12.5	8.9	12.5	8.5
	113	45.0	10.5	8.5	10.8	8.7	11.4	8.6	11.7	9.2	11.7	9.0	11.7	8.6	11.7	8.3
140 (16.0)	50	10.0	14.4	10.8	14.8	11.1	15.6	11.0	16.0	11.6	16.0	11.3	16.0	10.8	16.0	10.3
	68	20.0	14.4	10.8	14.8	11.1	15.6	11.0	16.0	11.6	16.0	11.3	16.0	10.8	16.0	10.3
	86	30.0	14.4	10.8	14.8	11.1	15.6	11.0	16.0	11.6	16.0	11.3	16.0	10.8	16.0	10.3
	104	40.0	12.8	10.1	13.2	10.4	13.9	10.2	14.2	10.9	14.2	10.6	14.2	10.2	14.2	9.7
	113	45.0	12.0	9.7	12.4	10.0	13.0	9.9	13.4	10.5	13.4	10.3	13.4	9.8	13.4	9.4
200 (22.4)	50	10.0	20.2	15.5	20.7	16.0	21.8	15.8	22.4	16.7	22.4	16.3	22.4	15.6	22.4	14.9
	68	20.0	20.2	15.5	20.7	16.0	21.8	15.8	22.4	16.7	22.4	16.3	22.4	15.6	22.4	14.9
	86	30.0	20.2	15.5	20.7	16.0	21.8	15.8	22.4	16.7	22.4	16.3	22.4	15.6	22.4	14.9
	104	40.0	17.9	14.5	18.4	14.9	19.4	14.7	19.9	15.7	19.9	15.4	19.9	14.7	19.9	14.1
	113	45.0	16.8	14.0	17.3	14.4	18.2	14.2	18.7	15.2	18.7	14.9	18.7	14.3	18.7	13.7
250 (28.0)	50	10.0	25.2	19.3	25.9	19.9	27.3	19.6	28.0	20.7	28.0	20.3	28.0	19.4	28.0	18.5
	68	20.0	25.2	19.3	25.9	19.9	27.3	19.6	28.0	20.7	28.0	20.3	28.0	19.4	28.0	18.5
	86	30.0	25.2	19.3	25.9	19.9	27.3	19.6	28.0	20.7	28.0	20.3	28.0	19.4	28.0	18.5
	104	40.0	22.4	18.0	23.1	18.5	24.3	18.3	24.9	19.5	24.9	19.1	24.9	18.3	24.9	17.5
	113	45.0	21.0	17.3	21.6	17.9	22.8	17.7	23.4	18.8	23.4	18.5	23.4	17.7	23.4	17.0

kcal/h = kW x 860, Btu/h = kW x 3,412

7.CAPACITY TABLES (Indoor unit)

A1. Cooling capacity with PQHY-P650-900YSHM

PEFY-P-VMR-E-L/R

CA : Capacity(kW) SHC : Sensible Heat Capacity(kW)

Model size (Rated kW)	Water temp.		Indoor air temp.													
			71 ˚FDB / 59˚FWB		73˚FDB / 61˚FWB		77˚FDB / 64˚FWB		81˚FDB / 66˚FWB		82˚FDB / 68˚FWB		86˚FDB / 72˚FWB		90˚FDB / 75˚FWB	
			21.5˚CDB / 15˚CWB		23˚CDB / 16˚CWB		25˚CDB / 18˚CWB		27˚CDB / 19˚CWB		28˚CDB / 20˚CWB		30˚CDB / 22˚CWB		32˚CDB / 24˚CWB	
	˚F	˚C	CA	SHC	CA	SHC	CA	SHC	CA	SHC	CA	SHC	CA	SHC	CA	SHC
20 (2.2)	50	10.0	2.0	1.7	2.0	1.7	2.1	1.7	2.2	1.8	2.2	1.8	2.2	1.7	2.2	1.6
	68	20.0	2.0	1.7	2.0	1.7	2.1	1.7	2.2	1.8	2.2	1.8	2.2	1.7	2.2	1.6
	86	30.0	2.0	1.7	2.0	1.7	2.1	1.7	2.2	1.8	2.2	1.8	2.2	1.7	2.2	1.6
	104	40.0	1.8	1.6	1.8	1.6	1.9	1.6	2.0	1.7	2.0	1.7	2.0	1.6	2.0	1.6
	113	45.0	1.7	1.5	1.7	1.6	1.8	1.6	1.8	1.7	1.8	1.6	1.8	1.6	1.8	1.5
25 (2.8)	50	10.0	2.5	1.9	2.6	2.0	2.7	1.9	2.8	2.1	2.8	2.0	2.8	1.9	2.8	1.8
	68	20.0	2.5	1.9	2.6	2.0	2.7	1.9	2.8	2.1	2.8	2.0	2.8	1.9	2.8	1.8
	86	30.0	2.5	1.9	2.6	2.0	2.7	1.9	2.8	2.1	2.8	2.0	2.8	1.9	2.8	1.8
	104	40.0	2.2	1.8	2.3	1.8	2.4	1.8	2.5	1.9	2.5	1.9	2.5	1.8	2.5	1.7
	113	45.0	2.1	1.7	2.2	1.8	2.3	1.8	2.3	1.9	2.3	1.8	2.3	1.8	2.3	1.7
32 (3.6)	50	10.0	3.2	2.3	3.3	2.4	3.5	2.4	3.6	2.5	3.6	2.4	3.6	2.3	3.6	2.2
	68	20.0	3.2	2.3	3.3	2.4	3.5	2.4	3.6	2.5	3.6	2.4	3.6	2.3	3.6	2.2
	86	30.0	3.2	2.3	3.3	2.4	3.5	2.4	3.6	2.5	3.6	2.4	3.6	2.3	3.6	2.2
	104	40.0	2.9	2.2	3.0	2.2	3.1	2.2	3.2	2.3	3.2	2.3	3.2	2.2	3.2	2.1
	113	45.0	2.7	2.1	2.8	2.1	2.9	2.1	3.0	2.2	3.0	2.2	3.0	2.1	3.0	2.0

kcal/h = kW x 860, Btu/h = kW x 3,412

7.CAPACITY TABLES (Indoor unit)

A1. Cooling capacity with PQHY-P650-900YSHM

PEFY-P-VMS1(L)-E

CA : Capacity(kW) SHC : Sensible Heat Capacity(kW)

Model size (Rated kW)	Water temp.		Indoor air temp.													
			71 ˚FDB / 59˚FWB		73˚FDB / 61˚FWB		77˚FDB / 64˚FWB		81˚FDB / 66˚FWB		82˚FDB / 68˚FWB		86˚FDB / 72˚FWB		90˚FDB / 75˚FWB	
			21.5˚CDB / 15˚CWB		23˚CDB / 16˚CWB		25˚CDB / 18˚CWB		27˚CDB / 19˚CWB		28˚CDB / 20˚CWB		30˚CDB / 22˚CWB		32˚CDB / 24˚CWB	
	˚F	˚C	CA	SHC	CA	SHC	CA	SHC	CA	SHC	CA	SHC	CA	SHC	CA	SHC
15 (1.7)	50	10.0	1.5	1.4	1.6	1.5	1.7	1.5	1.7	1.6	1.7	1.6	1.7	1.5	1.7	1.5
	68	20.0	1.5	1.4	1.6	1.5	1.7	1.5	1.7	1.6	1.7	1.6	1.7	1.5	1.7	1.5
	86	30.0	1.5	1.4	1.6	1.5	1.7	1.5	1.7	1.6	1.7	1.6	1.7	1.5	1.7	1.5
	104	40.0	1.4	1.4	1.4	1.4	1.5	1.4	1.5	1.5	1.5	1.5	1.5	1.4	1.5	1.4
	113	45.0	1.3	1.3	1.3	1.3	1.4	1.4	1.4	1.4	1.4	1.4	1.4	1.4	1.4	1.4
20 (2.2)	50	10.0	2.0	1.7	2.0	1.8	2.1	1.8	2.2	1.9	2.2	1.9	2.2	1.8	2.2	1.7
	68	20.0	2.0	1.7	2.0	1.8	2.1	1.8	2.2	1.9	2.2	1.9	2.2	1.8	2.2	1.7
	86	30.0	2.0	1.7	2.0	1.8	2.1	1.8	2.2	1.9	2.2	1.9	2.2	1.8	2.2	1.7
	104	40.0	1.8	1.6	1.8	1.7	1.9	1.7	2.0	1.8	2.0	1.8	2.0	1.7	2.0	1.7
	113	45.0	1.7	1.6	1.7	1.6	1.8	1.6	1.8	1.8	1.8	1.7	1.8	1.7	1.8	1.6
25 (2.8)	50	10.0	2.5	2.1	2.6	2.1	2.7	2.1	2.8	2.2	2.8	2.2	2.8	2.1	2.8	2.0
	68	20.0	2.5	2.1	2.6	2.1	2.7	2.1	2.8	2.2	2.8	2.2	2.8	2.1	2.8	2.0
	86	30.0	2.5	2.1	2.6	2.1	2.7	2.1	2.8	2.2	2.8	2.2	2.8	2.1	2.8	2.0
	104	40.0	2.2	1.9	2.3	2.0	2.4	2.0	2.5	2.1	2.5	2.1	2.5	2.0	2.5	1.9
	113	45.0	2.1	1.9	2.2	1.9	2.3	1.9	2.3	2.1	2.3	2.0	2.3	2.0	2.3	1.9
32 (3.6)	50	10.0	3.2	2.5	3.3	2.6	3.5	2.5	3.6	2.7	3.6	2.6	3.6	2.5	3.6	2.4
	68	20.0	3.2	2.5	3.3	2.6	3.5	2.5	3.6	2.7	3.6	2.6	3.6	2.5	3.6	2.4
	86	30.0	3.2	2.5	3.3	2.6	3.5	2.5	3.6	2.7	3.6	2.6	3.6	2.5	3.6	2.4
	104	40.0	2.9	2.3	3.0	2.4	3.1	2.4	3.2	2.5	3.2	2.5	3.2	2.4	3.2	2.3
	113	45.0	2.7	2.2	2.8	2.3	2.9	2.3	3.0	2.4	3.0	2.4	3.0	2.3	3.0	2.2
40 (4.5)	50	10.0	4.1	3.0	4.2	3.1	4.4	3.1	4.5	3.2	4.5	3.2	4.5	3.0	4.5	2.9
	68	20.0	4.1	3.0	4.2	3.1	4.4	3.1	4.5	3.2	4.5	3.2	4.5	3.0	4.5	2.9
	86	30.0	4.1	3.0	4.2	3.1	4.4	3.1	4.5	3.2	4.5	3.2	4.5	3.0	4.5	2.9
	104	40.0	3.6	2.8	3.7	2.9	3.9	2.9	4.0	3.0	4.0	3.0	4.0	2.8	4.0	2.7
	113	45.0	3.4	2.7	3.5	2.8	3.7	2.8	3.8	2.9	3.8	2.9	3.8	2.8	3.8	2.6
50 (5.6)	50	10.0	5.0	3.7	5.2	3.8	5.5	3.8	5.6	4.0	5.6	3.9	5.6	3.7	5.6	3.5
	68	20.0	5.0	3.7	5.2	3.8	5.5	3.8	5.6	4.0	5.6	3.9	5.6	3.7	5.6	3.5
	86	30.0	5.0	3.7	5.2	3.8	5.5	3.8	5.6	4.0	5.6	3.9	5.6	3.7	5.6	3.5
	104	40.0	4.5	3.4	4.6	3.5	4.9	3.5	5.0	3.7	5.0	3.6	5.0	3.5	5.0	3.3
	113	45.0	4.2	3.3	4.3	3.4	4.6	3.4	4.7	3.6	4.7	3.5	4.7	3.3	4.7	3.2
63 (7.1)	50	10.0	6.4	4.7	6.6	4.8	6.9	4.7	7.1	5.0	7.1	4.9	7.1	4.7	7.1	4.4
	68	20.0	6.4	4.7	6.6	4.8	6.9	4.7	7.1	5.0	7.1	4.9	7.1	4.7	7.1	4.4
	86	30.0	6.4	4.7	6.6	4.8	6.9	4.7	7.1	5.0	7.1	4.9	7.1	4.7	7.1	4.4
	104	40.0	5.7	4.3	5.8	4.5	6.2	4.4	6.3	4.7	6.3	4.6	6.3	4.4	6.3	4.2
	113	45.0	5.3	4.2	5.5	4.3	5.8	4.2	5.9	4.5	5.9	4.4	5.9	4.2	5.9	4.0

kcal/h = kW x 860, Btu/h = kW x 3,412

7.CAPACITY TABLES (Indoor unit)

B1. Cooling capacity with PQHY-P650-900YSHM

PEFY-P-VMA(L)-E

CA : Capacity(kW) SHC : Sensible Heat Capacity(kW)

Model size (Rated kW)	Water temp.		Indoor air temp.													
			71 ˚FDB / 59˚FWB		73˚FDB / 61˚FWB		77˚FDB / 64˚FWB		81˚FDB / 66˚FWB		82˚FDB / 68˚FWB		86˚FDB / 72˚FWB		90˚FDB / 75˚FWB	
			21.5˚CDB / 15˚CWB		23˚CDB / 16˚CWB		25˚CDB / 18˚CWB		27˚CDB / 19˚CWB		28˚CDB / 20˚CWB		30˚CDB / 22˚CWB		32˚CDB / 24˚CWB	
	˚F	˚C	CA	SHC	CA	SHC	CA	SHC	CA	SHC	CA	SHC	CA	SHC	CA	SHC
20 (2.2)	50	10.0	2.0	1.8	2.0	1.9	2.1	1.8	2.2	2.0	2.2	2.0	2.2	1.9	2.2	1.8
	68	20.0	2.0	1.8	2.0	1.9	2.1	1.8	2.2	2.0	2.2	2.0	2.2	1.9	2.2	1.8
	86	30.0	2.0	1.8	2.0	1.9	2.1	1.8	2.2	2.0	2.2	2.0	2.2	1.9	2.2	1.8
	104	40.0	1.8	1.7	1.8	1.8	1.9	1.8	2.0	1.9	2.0	1.9	2.0	1.8	2.0	1.7
	113	45.0	1.7	1.7	1.7	1.7	1.8	1.7	1.8	1.8	1.8	1.8	1.8	1.8	1.8	1.7
25 (2.8)	50	10.0	2.5	2.0	2.6	2.1	2.7	2.1	2.8	2.2	2.8	2.2	2.8	2.1	2.8	2.0
	68	20.0	2.5	2.0	2.6	2.1	2.7	2.1	2.8	2.2	2.8	2.2	2.8	2.1	2.8	2.0
	86	30.0	2.5	2.0	2.6	2.1	2.7	2.1	2.8	2.2	2.8	2.2	2.8	2.1	2.8	2.0
	104	40.0	2.2	1.9	2.3	2.0	2.4	1.9	2.5	2.1	2.5	2.0	2.5	2.0	2.5	1.9
	113	45.0	2.1	1.8	2.2	1.9	2.3	1.9	2.3	2.0	2.3	2.0	2.3	1.9	2.3	1.8
32 (3.6)	50	10.0	3.2	2.5	3.3	2.5	3.5	2.5	3.6	2.6	3.6	2.6	3.6	2.5	3.6	2.4
	68	20.0	3.2	2.5	3.3	2.5	3.5	2.5	3.6	2.6	3.6	2.6	3.6	2.5	3.6	2.4
	86	30.0	3.2	2.5	3.3	2.5	3.5	2.5	3.6	2.6	3.6	2.6	3.6	2.5	3.6	2.4
	104	40.0	2.9	2.3	3.0	2.4	3.1	2.3	3.2	2.5	3.2	2.4	3.2	2.3	3.2	2.2
	113	45.0	2.7	2.2	2.8	2.3	2.9	2.2	3.0	2.4	3.0	2.3	3.0	2.2	3.0	2.2
40 (4.5)	50	10.0	4.1	3.3	4.2	3.4	4.4	3.4	4.5	3.6	4.5	3.5	4.5	3.4	4.5	3.3
	68	20.0	4.1	3.3	4.2	3.4	4.4	3.4	4.5	3.6	4.5	3.5	4.5	3.4	4.5	3.3
	86	30.0	4.1	3.3	4.2	3.4	4.4	3.4	4.5	3.6	4.5	3.5	4.5	3.4	4.5	3.3
	104	40.0	3.6	3.1	3.7	3.2	3.9	3.2	4.0	3.4	4.0	3.3	4.0	3.2	4.0	3.1
	113	45.0	3.4	3.0	3.5	3.1	3.7	3.1	3.8	3.3	3.8	3.3	3.8	3.1	3.8	3.0
50 (5.6)	50	10.0	5.0	4.1	5.2	4.2	5.5	4.2	5.6	4.4	5.6	4.3	5.6	4.2	5.6	4.0
	68	20.0	5.0	4.1	5.2	4.2	5.5	4.2	5.6	4.4	5.6	4.3	5.6	4.2	5.6	4.0
	86	30.0	5.0	4.1	5.2	4.2	5.5	4.2	5.6	4.4	5.6	4.3	5.6	4.2	5.6	4.0
	104	40.0	4.5	3.8	4.6	4.0	4.9	3.9	5.0	4.2	5.0	4.1	5.0	3.9	5.0	3.8
	113	45.0	4.2	3.7	4.3	3.8	4.6	3.8	4.7	4.1	4.7	4.0	4.7	3.8	4.7	3.7
63 (7.1)	50	10.0	6.4	5.1	6.6	5.2	6.9	5.1	7.1	5.5	7.1	5.3	7.1	5.1	7.1	4.9
	68	20.0	6.4	5.1	6.6	5.2	6.9	5.1	7.1	5.5	7.1	5.3	7.1	5.1	7.1	4.9
	86	30.0	6.4	5.1	6.6	5.2	6.9	5.1	7.1	5.5	7.1	5.3	7.1	5.1	7.1	4.9
	104	40.0	5.7	4.7	5.8	4.9	6.2	4.8	6.3	5.1	6.3	5.0	6.3	4.8	6.3	4.6
	113	45.0	5.3	4.6	5.5	4.7	5.8	4.7	5.9	5.0	5.9	4.9	5.9	4.7	5.9	4.5
71 (8.0)	50	10.0	7.2	5.5	7.4	5.6	7.8	5.6	8.0	5.9	8.0	5.8	8.0	5.5	8.0	5.3
	68	20.0	7.2	5.5	7.4	5.6	7.8	5.6	8.0	5.9	8.0	5.8	8.0	5.5	8.0	5.3
	86	30.0	7.2	5.5	7.4	5.6	7.8	5.6	8.0	5.9	8.0	5.8	8.0	5.5	8.0	5.3
	104	40.0	6.4	5.1	6.6	5.3	6.9	5.2	7.1	5.5	7.1	5.4	7.1	5.2	7.1	5.0
	113	45.0	6.0	4.9	6.2	5.1	6.5	5.0	6.7	5.3	6.7	5.2	6.7	5.0	6.7	4.8
80 (9.0)	50	10.0	8.1	5.9	8.3	6.1	8.8	6.0	9.0	6.3	9.0	6.1	9.0	5.8	9.0	5.6
	68	20.0	8.1	5.9	8.3	6.1	8.8	6.0	9.0	6.3	9.0	6.1	9.0	5.8	9.0	5.6
	86	30.0	8.1	5.9	8.3	6.1	8.8	6.0	9.0	6.3	9.0	6.1	9.0	5.8	9.0	5.6
	104	40.0	7.2	5.5	7.4	5.6	7.8	5.5	8.0	5.8	8.0	5.7	8.0	5.5	8.0	5.2
	113	45.0	6.8	5.2	7.0	5.4	7.3	5.3	7.5	5.6	7.5	5.5	7.5	5.3	7.5	5.0
100 (11.2)	50	10.0	10.1	8.1	10.4	8.4	10.9	8.3	11.2	8.8	11.2	8.6	11.2	8.3	11.2	7.9
	68	20.0	10.1	8.1	10.4	8.4	10.9	8.3	11.2	8.8	11.2	8.6	11.2	8.3	11.2	7.9
	86	30.0	10.1	8.1	10.4	8.4	10.9	8.3	11.2	8.8	11.2	8.6	11.2	8.3	11.2	7.9
	104	40.0	9.0	7.6	9.2	7.9	9.7	7.8	10.0	8.3	10.0	8.2	10.0	7.8	10.0	7.5
	113	45.0	8.4	7.4	8.7	7.6	9.1	7.5	9.4	8.1	9.4	7.9	9.4	7.6	9.4	7.4
125 (14.0)	50	10.0	12.6	9.9	13.0	10.2	13.7	10.1	14.0	10.7	14.0	10.4	14.0	10.0	14.0	9.6
	68	20.0	12.6	9.9	13.0	10.2	13.7	10.1	14.0	10.7	14.0	10.4	14.0	10.0	14.0	9.6
	86	30.0	12.6	9.9	13.0	10.2	13.7	10.1	14.0	10.7	14.0	10.4	14.0	10.0	14.0	9.6
	104	40.0	11.2	9.2	11.5	9.5	12.1	9.4	12.5	10.0	12.5	9.8	12.5	9.4	12.5	9.1
	113	45.0	10.5	8.9	10.8	9.2	11.4	9.1	11.7	9.7	11.7	9.5	11.7	9.2	11.7	8.8
140 (16.0)	50	10.0	14.4	11.2	14.8	11.5	15.6	11.4	16.0	12.0	16.0	11.8	16.0	11.3	16.0	10.8
	68	20.0	14.4	11.2	14.8	11.5	15.6	11.4	16.0	12.0	16.0	11.8	16.0	11.3	16.0	10.8
	86	30.0	14.4	11.2	14.8	11.5	15.6	11.4	16.0	12.0	16.0	11.8	16.0	11.3	16.0	10.8
	104	40.0	12.8	10.4	13.2	10.8	13.9	10.6	14.2	11.3	14.2	11.1	14.2	10.6	14.2	10.2
	113	45.0	12.0	10.1	12.4	10.4	13.0	10.3	13.4	11.0	13.4	10.7	13.4	10.3	13.4	9.9

kcal/h = kW x 860, Btu/h = kW x 3,412

7.CAPACITY TABLES (Indoor unit)

D1. Cooling capacity with PQHY-P650-900YSHM

PDFY-P-VM-E

CA : Capacity(kW) SHC : Sensible Heat Capacity(kW)

Model size (Rated kW)	Water temp.		Indoor air temp.													
			71 ˚FDB / 59˚FWB		73˚FDB / 61˚FWB		77˚FDB / 64˚FWB		81˚FDB / 66˚FWB		82˚FDB / 68˚FWB		86˚FDB / 72˚FWB		90˚FDB / 75˚FWB	
			21.5˚CDB / 15˚CWB		23˚CDB / 16˚CWB		25˚CDB / 18˚CWB		27˚CDB / 19˚CWB		28˚CDB / 20˚CWB		30˚CDB / 22˚CWB		32˚CDB / 24˚CWB	
	˚F	˚C	CA	SHC	CA	SHC	CA	SHC	CA	SHC	CA	SHC	CA	SHC	CA	SHC
20 (2.2)	50	10.0	2.0	1.7	2.0	1.8	2.1	1.7	2.2	1.9	2.2	1.8	2.2	1.8	2.2	1.7
	68	20.0	2.0	1.7	2.0	1.8	2.1	1.7	2.2	1.9	2.2	1.8	2.2	1.8	2.2	1.7
	86	30.0	2.0	1.7	2.0	1.8	2.1	1.7	2.2	1.9	2.2	1.8	2.2	1.8	2.2	1.7
	104	40.0	1.8	1.6	1.8	1.7	1.9	1.6	2.0	1.8	2.0	1.7	2.0	1.7	2.0	1.6
	113	45.0	1.7	1.6	1.7	1.6	1.8	1.6	1.8	1.7	1.8	1.7	1.8	1.6	1.8	1.6
25 (2.8)	50	10.0	2.5	2.0	2.6	2.0	2.7	2.0	2.8	2.1	2.8	2.1	2.8	2.0	2.8	1.9
	68	20.0	2.5	2.0	2.6	2.0	2.7	2.0	2.8	2.1	2.8	2.1	2.8	2.0	2.8	1.9
	86	30.0	2.5	2.0	2.6	2.0	2.7	2.0	2.8	2.1	2.8	2.1	2.8	2.0	2.8	1.9
	104	40.0	2.2	1.8	2.3	1.9	2.4	1.9	2.5	2.0	2.5	1.9	2.5	1.9	2.5	1.8
	113	45.0	2.1	1.8	2.2	1.8	2.3	1.8	2.3	1.9	2.3	1.9	2.3	1.8	2.3	1.7
32 (3.6)	50	10.0	3.2	2.4	3.3	2.4	3.5	2.4	3.6	2.5	3.6	2.5	3.6	2.4	3.6	2.2
	68	20.0	3.2	2.4	3.3	2.4	3.5	2.4	3.6	2.5	3.6	2.5	3.6	2.4	3.6	2.2
	86	30.0	3.2	2.4	3.3	2.4	3.5	2.4	3.6	2.5	3.6	2.5	3.6	2.4	3.6	2.2
	104	40.0	2.9	2.2	3.0	2.3	3.1	2.2	3.2	2.4	3.2	2.3	3.2	2.2	3.2	2.1
	113	45.0	2.7	2.1	2.8	2.2	2.9	2.1	3.0	2.3	3.0	2.2	3.0	2.1	3.0	2.0
40 (4.5)	50	10.0	4.1	3.1	4.2	3.2	4.4	3.1	4.5	3.3	4.5	3.2	4.5	3.1	4.5	3.0
	68	20.0	4.1	3.1	4.2	3.2	4.4	3.1	4.5	3.3	4.5	3.2	4.5	3.1	4.5	3.0
	86	30.0	4.1	3.1	4.2	3.2	4.4	3.1	4.5	3.3	4.5	3.2	4.5	3.1	4.5	3.0
	104	40.0	3.6	2.9	3.7	3.0	3.9	2.9	4.0	3.1	4.0	3.0	4.0	2.9	4.0	2.8
	113	45.0	3.4	2.8	3.5	2.9	3.7	2.8	3.8	3.0	3.8	2.9	3.8	2.8	3.8	2.7
50 (5.6)	50	10.0	5.0	3.8	5.2	3.9	5.5	3.9	5.6	4.1	5.6	4.0	5.6	3.8	5.6	3.6
	68	20.0	5.0	3.8	5.2	3.9	5.5	3.9	5.6	4.1	5.6	4.0	5.6	3.8	5.6	3.6
	86	30.0	5.0	3.8	5.2	3.9	5.5	3.9	5.6	4.1	5.6	4.0	5.6	3.8	5.6	3.6
	104	40.0	4.5	3.5	4.6	3.6	4.9	3.6	5.0	3.8	5.0	3.7	5.0	3.6	5.0	3.4
	113	45.0	4.2	3.4	4.3	3.5	4.6	3.5	4.7	3.7	4.7	3.6	4.7	3.5	4.7	3.3
63 (7.1)	50	10.0	6.4	4.8	6.6	4.9	6.9	4.8	7.1	5.1	7.1	5.0	7.1	4.8	7.1	4.5
	68	20.0	6.4	4.8	6.6	4.9	6.9	4.8	7.1	5.1	7.1	5.0	7.1	4.8	7.1	4.5
	86	30.0	6.4	4.8	6.6	4.9	6.9	4.8	7.1	5.1	7.1	5.0	7.1	4.8	7.1	4.5
	104	40.0	5.7	4.4	5.8	4.6	6.2	4.5	6.3	4.8	6.3	4.7	6.3	4.5	6.3	4.3
	113	45.0	5.3	4.3	5.5	4.4	5.8	4.3	5.9	4.6	5.9	4.5	5.9	4.3	5.9	4.1
71 (8.0)	50	10.0	7.2	5.4	7.4	5.5	7.8	5.5	8.0	5.8	8.0	5.6	8.0	5.4	8.0	5.1
	68	20.0	7.2	5.4	7.4	5.5	7.8	5.5	8.0	5.8	8.0	5.6	8.0	5.4	8.0	5.1
	86	30.0	7.2	5.4	7.4	5.5	7.8	5.5	8.0	5.8	8.0	5.6	8.0	5.4	8.0	5.1
	104	40.0	6.4	5.0	6.6	5.2	6.9	5.1	7.1	5.4	7.1	5.3	7.1	5.0	7.1	4.8
	113	45.0	6.0	4.8	6.2	5.0	6.5	4.9	6.7	5.2	6.7	5.1	6.7	4.9	6.7	4.7
80 (9.0)	50	10.0	8.1	5.9	8.3	6.0	8.8	6.0	9.0	6.3	9.0	6.1	9.0	5.8	9.0	5.5
	68	20.0	8.1	5.9	8.3	6.0	8.8	6.0	9.0	6.3	9.0	6.1	9.0	5.8	9.0	5.5
	86	30.0	8.1	5.9	8.3	6.0	8.8	6.0	9.0	6.3	9.0	6.1	9.0	5.8	9.0	5.5
	104	40.0	7.2	5.4	7.4	5.6	7.8	5.5	8.0	5.8	8.0	5.7	8.0	5.4	8.0	5.2
	113	45.0	6.8	5.2	7.0	5.4	7.3	5.3	7.5	5.6	7.5	5.5	7.5	5.3	7.5	5.0
100 (11.2)	50	10.0	10.1	7.4	10.4	7.6	10.9	7.5	11.2	7.9	11.2	7.7	11.2	7.3	11.2	7.0
	68	20.0	10.1	7.4	10.4	7.6	10.9	7.5	11.2	7.9	11.2	7.7	11.2	7.3	11.2	7.0
	86	30.0	10.1	7.4	10.4	7.6	10.9	7.5	11.2	7.9	11.2	7.7	11.2	7.3	11.2	7.0
	104	40.0	9.0	6.8	9.2	7.0	9.7	6.9	10.0	7.4	10.0	7.2	10.0	6.9	10.0	6.6
	113	45.0	8.4	6.6	8.7	6.8	9.1	6.7	9.4	7.1	9.4	6.9	9.4	6.6	9.4	6.4
125 (14.0)	50	10.0	12.6	9.4	13.0	9.6	13.7	9.5	14.0	10.0	14.0	9.8	14.0	9.3	14.0	8.9
	68	20.0	12.6	9.4	13.0	9.6	13.7	9.5	14.0	10.0	14.0	9.8	14.0	9.3	14.0	8.9
	86	30.0	12.6	9.4	13.0	9.6	13.7	9.5	14.0	10.0	14.0	9.8	14.0	9.3	14.0	8.9
	104	40.0	11.2	8.7	11.5	9.0	12.1	8.8	12.5	9.4	12.5	9.2	12.5	8.8	12.5	8.4
	113	45.0	10.5	8.4	10.8	8.6	11.4	8.5	11.7	9.1	11.7	8.9	11.7	8.5	11.7	8.1

kcal/h = kW x 860, Btu/h = kW x 3,412

7.CAPACITY TABLES (Indoor unit)

E1. Cooling capacity with PQHY-P650-900YSHM

PMFY-P-VBM-E

CA : Capacity(kW) SHC : Sensible Heat Capacity(kW)

Model size (Rated kW)	Water temp.		Indoor air temp.													
			71 ˚FDB / 59˚FWB		73˚FDB / 61˚FWB		77˚FDB / 64˚FWB		81˚FDB / 66˚FWB		82˚FDB / 68˚FWB		86˚FDB / 72˚FWB		90˚FDB / 75˚FWB	
			21.5˚CDB / 15˚CWB		23˚CDB / 16˚CWB		25˚CDB / 18˚CWB		27˚CDB / 19˚CWB		28˚CDB / 20˚CWB		30˚CDB / 22˚CWB		32˚CDB / 24˚CWB	
	˚F	˚C	CA	SHC	CA	SHC	CA	SHC	CA	SHC	CA	SHC	CA	SHC	CA	SHC
20 (2.2)	50	10.0	2.0	1.8	2.0	1.8	2.1	1.8	2.2	1.9	2.2	1.9	2.2	1.8	2.2	1.8
	68	20.0	2.0	1.8	2.0	1.8	2.1	1.8	2.2	1.9	2.2	1.9	2.2	1.8	2.2	1.8
	86	30.0	2.0	1.8	2.0	1.8	2.1	1.8	2.2	1.9	2.2	1.9	2.2	1.8	2.2	1.8
	104	40.0	1.8	1.7	1.8	1.7	1.9	1.7	2.0	1.8	2.0	1.8	2.0	1.7	2.0	1.7
	113	45.0	1.7	1.6	1.7	1.7	1.8	1.7	1.8	1.8	1.8	1.8	1.8	1.7	1.8	1.7
25 (2.8)	50	10.0	2.5	2.2	2.6	2.2	2.7	2.2	2.8	2.4	2.8	2.3	2.8	2.2	2.8	2.1
	68	20.0	2.5	2.2	2.6	2.2	2.7	2.2	2.8	2.4	2.8	2.3	2.8	2.2	2.8	2.1
	86	30.0	2.5	2.2	2.6	2.2	2.7	2.2	2.8	2.4	2.8	2.3	2.8	2.2	2.8	2.1
	104	40.0	2.2	2.0	2.3	2.1	2.4	2.1	2.5	2.2	2.5	2.2	2.5	2.1	2.5	2.0
	113	45.0	2.1	2.0	2.2	2.0	2.3	2.0	2.3	2.2	2.3	2.1	2.3	2.1	2.3	2.0
32 (3.6)	50	10.0	3.2	2.5	3.3	2.5	3.5	2.5	3.6	2.7	3.6	2.6	3.6	2.5	3.6	2.4
	68	20.0	3.2	2.5	3.3	2.5	3.5	2.5	3.6	2.7	3.6	2.6	3.6	2.5	3.6	2.4
	86	30.0	3.2	2.5	3.3	2.5	3.5	2.5	3.6	2.7	3.6	2.6	3.6	2.5	3.6	2.4
	104	40.0	2.9	2.3	3.0	2.4	3.1	2.3	3.2	2.5	3.2	2.4	3.2	2.3	3.2	2.2
	113	45.0	2.7	2.2	2.8	2.3	2.9	2.3	3.0	2.4	3.0	2.4	3.0	2.3	3.0	2.2
40 (4.5)	50	10.0	4.1	3.0	4.2	3.1	4.4	3.1	4.5	3.2	4.5	3.2	4.5	3.0	4.5	2.9
	68	20.0	4.1	3.0	4.2	3.1	4.4	3.1	4.5	3.2	4.5	3.2	4.5	3.0	4.5	2.9
	86	30.0	4.1	3.0	4.2	3.1	4.4	3.1	4.5	3.2	4.5	3.2	4.5	3.0	4.5	2.9
	104	40.0	3.6	2.8	3.7	2.9	3.9	2.9	4.0	3.0	4.0	3.0	4.0	2.8	4.0	2.7
	113	45.0	3.4	2.7	3.5	2.8	3.7	2.8	3.8	2.9	3.8	2.9	3.8	2.7	3.8	2.6

kcal/h = kW x 860, Btu/h = kW x 3,412

7.CAPACITY TABLES (Indoor unit)

F1. Cooling capacity with PQHY-P650-900YSHM

PLFY-P-VLMD-E

CA : Capacity(kW) SHC : Sensible Heat Capacity(kW)

Model size (Rated kW)	Water temp.		Indoor air temp.													
			71 ˚FDB / 59˚FWB		73˚FDB / 61˚FWB		77˚FDB / 64˚FWB		81˚FDB / 66˚FWB		82˚FDB / 68˚FWB		86˚FDB / 72˚FWB		90˚FDB / 75˚FWB	
			21.5˚CDB / 15˚CWB		23˚CDB / 16˚CWB		25˚CDB / 18˚CWB		27˚CDB / 19˚CWB		28˚CDB / 20˚CWB		30˚CDB / 22˚CWB		32˚CDB / 24˚CWB	
	˚F	˚C	CA	SHC	CA	SHC	CA	SHC	CA	SHC	CA	SHC	CA	SHC	CA	SHC
20 (2.2)	50	10.0	2.0	1.8	2.0	1.9	2.1	1.9	2.2	2.0	2.2	2.0	2.2	1.9	2.2	1.8
	68	20.0	2.0	1.8	2.0	1.9	2.1	1.9	2.2	2.0	2.2	2.0	2.2	1.9	2.2	1.8
	86	30.0	2.0	1.8	2.0	1.9	2.1	1.9	2.2	2.0	2.2	2.0	2.2	1.9	2.2	1.8
	104	40.0	1.8	1.7	1.8	1.8	1.9	1.8	2.0	1.9	2.0	1.9	2.0	1.8	2.0	1.8
	113	45.0	1.7	1.7	1.7	1.7	1.8	1.7	1.8	1.8	1.8	1.8	1.8	1.8	1.8	1.7
25 (2.8)	50	10.0	2.5	2.1	2.6	2.1	2.7	2.1	2.8	2.2	2.8	2.2	2.8	2.1	2.8	2.0
	68	20.0	2.5	2.1	2.6	2.1	2.7	2.1	2.8	2.2	2.8	2.2	2.8	2.1	2.8	2.0
	86	30.0	2.5	2.1	2.6	2.1	2.7	2.1	2.8	2.2	2.8	2.2	2.8	2.1	2.8	2.0
	104	40.0	2.2	1.9	2.3	2.0	2.4	2.0	2.5	2.1	2.5	2.1	2.5	2.0	2.5	1.9
	113	45.0	2.1	1.9	2.2	1.9	2.3	1.9	2.3	2.1	2.3	2.0	2.3	1.9	2.3	1.9
32 (3.6)	50	10.0	3.2	2.5	3.3	2.5	3.5	2.5	3.6	2.6	3.6	2.6	3.6	2.5	3.6	2.4
	68	20.0	3.2	2.5	3.3	2.5	3.5	2.5	3.6	2.6	3.6	2.6	3.6	2.5	3.6	2.4
	86	30.0	3.2	2.5	3.3	2.5	3.5	2.5	3.6	2.6	3.6	2.6	3.6	2.5	3.6	2.4
	104	40.0	2.9	2.3	3.0	2.4	3.1	2.3	3.2	2.5	3.2	2.4	3.2	2.3	3.2	2.2
	113	45.0	2.7	2.2	2.8	2.3	2.9	2.2	3.0	2.4	3.0	2.3	3.0	2.3	3.0	2.2
40 (4.5)	50	10.0	4.1	2.9	4.2	2.9	4.4	2.9	4.5	3.0	4.5	3.0	4.5	2.8	4.5	2.7
	68	20.0	4.1	2.9	4.2	2.9	4.4	2.9	4.5	3.0	4.5	3.0	4.5	2.8	4.5	2.7
	86	30.0	4.1	2.9	4.2	2.9	4.4	2.9	4.5	3.0	4.5	3.0	4.5	2.8	4.5	2.7
	104	40.0	3.6	2.6	3.7	2.7	3.9	2.7	4.0	2.8	4.0	2.7	4.0	2.6	4.0	2.5
	113	45.0	3.4	2.5	3.5	2.6	3.7	2.6	3.8	2.7	3.8	2.6	3.8	2.5	3.8	2.4
50 (5.6)	50	10.0	5.0	3.7	5.2	3.8	5.5	3.7	5.6	3.9	5.6	3.8	5.6	3.6	5.6	3.5
	68	20.0	5.0	3.7	5.2	3.8	5.5	3.7	5.6	3.9	5.6	3.8	5.6	3.6	5.6	3.5
	86	30.0	5.0	3.7	5.2	3.8	5.5	3.7	5.6	3.9	5.6	3.8	5.6	3.6	5.6	3.5
	104	40.0	4.5	3.4	4.6	3.5	4.9	3.4	5.0	3.6	5.0	3.6	5.0	3.4	5.0	3.2
	113	45.0	4.2	3.3	4.3	3.4	4.6	3.3	4.7	3.5	4.7	3.4	4.7	3.3	4.7	3.1
63 (7.1)	50	10.0	6.4	4.5	6.6	4.7	6.9	4.6	7.1	4.8	7.1	4.7	7.1	4.5	7.1	4.2
	68	20.0	6.4	4.5	6.6	4.7	6.9	4.6	7.1	4.8	7.1	4.7	7.1	4.5	7.1	4.2
	86	30.0	6.4	4.5	6.6	4.7	6.9	4.6	7.1	4.8	7.1	4.7	7.1	4.5	7.1	4.2
	104	40.0	5.7	4.2	5.8	4.3	6.2	4.2	6.3	4.5	6.3	4.4	6.3	4.1	6.3	4.0
	113	45.0	5.3	4.0	5.5	4.1	5.8	4.1	5.9	4.3	5.9	4.2	5.9	4.0	5.9	3.8
80 (9.0)	50	10.0	8.1	6.0	8.3	6.2	8.8	6.1	9.0	6.4	9.0	6.3	9.0	6.0	9.0	5.7
	68	20.0	8.1	6.0	8.3	6.2	8.8	6.1	9.0	6.4	9.0	6.3	9.0	6.0	9.0	5.7
	86	30.0	8.1	6.0	8.3	6.2	8.8	6.1	9.0	6.4	9.0	6.3	9.0	6.0	9.0	5.7
	104	40.0	7.2	5.6	7.4	5.7	7.8	5.7	8.0	6.0	8.0	5.9	8.0	5.6	8.0	5.4
	113	45.0	6.8	5.4	7.0	5.5	7.3	5.5	7.5	5.8	7.5	5.7	7.5	5.4	7.5	5.2
100 (11.2)	50	10.0	10.1	7.4	10.4	7.6	10.9	7.5	11.2	7.9	11.2	7.7	11.2	7.3	11.2	7.0
	68	20.0	10.1	7.4	10.4	7.6	10.9	7.5	11.2	7.9	11.2	7.7	11.2	7.3	11.2	7.0
	86	30.0	10.1	7.4	10.4	7.6	10.9	7.5	11.2	7.9	11.2	7.7	11.2	7.3	11.2	7.0
	104	40.0	9.0	6.8	9.2	7.0	9.7	6.9	10.0	7.3	10.0	7.2	10.0	6.9	10.0	6.6
	113	45.0	8.4	6.6	8.7	6.8	9.1	6.7	9.4	7.1	9.4	6.9	9.4	6.6	9.4	6.3
125 (14.0)	50	10.0	12.6	9.4	13.0	9.7	13.7	9.5	14.0	10.1	14.0	9.8	14.0	9.4	14.0	8.9
	68	20.0	12.6	9.4	13.0	9.7	13.7	9.5	14.0	10.1	14.0	9.8	14.0	9.4	14.0	8.9
	86	30.0	12.6	9.4	13.0	9.7	13.7	9.5	14.0	10.1	14.0	9.8	14.0	9.4	14.0	8.9
	104	40.0	11.2	8.7	11.5	9.0	12.1	8.9	12.5	9.4	12.5	9.2	12.5	8.8	12.5	8.4
	113	45.0	10.5	8.4	10.8	8.7	11.4	8.5	11.7	9.1	11.7	8.9	11.7	8.5	11.7	8.2

kcal/h = kW x 860, Btu/h = kW x 3,412

7.CAPACITY TABLES (Indoor unit)

G1. Cooling capacity with PQHY-P650-900YSHM

PLFY-P-VCM-E

CA : Capacity(kW) SHC : Sensible Heat Capacity(kW)

Model size (Rated kW)	Water temp.		Indoor air temp.													
			71 ˚FDB / 59˚FWB		73˚FDB / 61˚FWB		77˚FDB / 64˚FWB		81˚FDB / 66˚FWB		82˚FDB / 68˚FWB		86˚FDB / 72˚FWB		90˚FDB / 75˚FWB	
			21.5˚CDB / 15˚CWB		23˚CDB / 16˚CWB		25˚CDB / 18˚CWB		27˚CDB / 19˚CWB		28˚CDB / 20˚CWB		30˚CDB / 22˚CWB		32˚CDB / 24˚CWB	
	˚F	˚C	CA	SHC	CA	SHC	CA	SHC	CA	SHC	CA	SHC	CA	SHC	CA	SHC
20 (2.2)	50	10.0	2.0	1.7	2.0	1.8	2.1	1.8	2.2	1.9	2.2	1.9	2.2	1.8	2.2	1.7
	68	20.0	2.0	1.7	2.0	1.8	2.1	1.8	2.2	1.9	2.2	1.9	2.2	1.8	2.2	1.7
	86	30.0	2.0	1.7	2.0	1.8	2.1	1.8	2.2	1.9	2.2	1.9	2.2	1.8	2.2	1.7
	104	40.0	1.8	1.6	1.8	1.7	1.9	1.7	2.0	1.8	2.0	1.8	2.0	1.7	2.0	1.6
	113	45.0	1.7	1.6	1.7	1.6	1.8	1.6	1.8	1.8	1.8	1.7	1.8	1.7	1.8	1.6
25 (2.8)	50	10.0	2.5	2.1	2.6	2.1	2.7	2.1	2.8	2.3	2.8	2.2	2.8	2.1	2.8	2.0
	68	20.0	2.5	2.1	2.6	2.1	2.7	2.1	2.8	2.3	2.8	2.2	2.8	2.1	2.8	2.0
	86	30.0	2.5	2.1	2.6	2.1	2.7	2.1	2.8	2.3	2.8	2.2	2.8	2.1	2.8	2.0
	104	40.0	2.2	1.9	2.3	2.0	2.4	2.0	2.5	2.1	2.5	2.1	2.5	2.0	2.5	1.9
	113	45.0	2.1	1.9	2.2	2.0	2.3	1.9	2.3	2.1	2.3	2.0	2.3	2.0	2.3	1.9
32 (3.6)	50	10.0	3.2	2.5	3.3	2.6	3.5	2.6	3.6	2.7	3.6	2.6	3.6	2.5	3.6	2.4
	68	20.0	3.2	2.5	3.3	2.6	3.5	2.6	3.6	2.7	3.6	2.6	3.6	2.5	3.6	2.4
	86	30.0	3.2	2.5	3.3	2.6	3.5	2.6	3.6	2.7	3.6	2.6	3.6	2.5	3.6	2.4
	104	40.0	2.9	2.3	3.0	2.4	3.1	2.4	3.2	2.5	3.2	2.5	3.2	2.4	3.2	2.3
	113	45.0	2.7	2.3	2.8	2.3	2.9	2.3	3.0	2.5	3.0	2.4	3.0	2.3	3.0	2.2
40 (4.5)	50	10.0	4.1	2.9	4.2	3.0	4.4	3.0	4.5	3.1	4.5	3.0	4.5	2.9	4.5	2.7
	68	20.0	4.1	2.9	4.2	3.0	4.4	3.0	4.5	3.1	4.5	3.0	4.5	2.9	4.5	2.7
	86	30.0	4.1	2.9	4.2	3.0	4.4	3.0	4.5	3.1	4.5	3.0	4.5	2.9	4.5	2.7
	104	40.0	3.6	2.7	3.7	2.8	3.9	2.7	4.0	2.9	4.0	2.8	4.0	2.7	4.0	2.6
	113	45.0	3.4	2.6	3.5	2.7	3.7	2.6	3.8	2.8	3.8	2.7	3.8	2.6	3.8	2.5

kcal/h = kW x 860, Btu/h = kW x 3,412

7.CAPACITY TABLES (Indoor unit)

G1. Cooling capacity with PQHY-P650-900YSHM

PLFY-P-VBM-E

CA : Capacity(kW) SHC : Sensible Heat Capacity(kW)

Model size (Rated kW)	Water temp.		Indoor air temp.													
			71 ˚FDB / 59˚FWB		73˚FDB / 61˚FWB		77˚FDB / 64˚FWB		81˚FDB / 66˚FWB		82˚FDB / 68˚FWB		86˚FDB / 72˚FWB		90˚FDB / 75˚FWB	
			21.5˚CDB / 15˚CWB		23˚CDB / 16˚CWB		25˚CDB / 18˚CWB		27˚CDB / 19˚CWB		28˚CDB / 20˚CWB		30˚CDB / 22˚CWB		32˚CDB / 24˚CWB	
	˚F	˚C	CA	SHC	CA	SHC	CA	SHC	CA	SHC	CA	SHC	CA	SHC	CA	SHC
32 (3.6)	50	10.0	3.2	2.8	3.3	2.8	3.5	2.8	3.6	3.0	3.6	2.9	3.6	2.8	3.6	2.7
	68	20.0	3.2	2.8	3.3	2.8	3.5	2.8	3.6	3.0	3.6	2.9	3.6	2.8	3.6	2.7
	86	30.0	3.2	2.8	3.3	2.8	3.5	2.8	3.6	3.0	3.6	2.9	3.6	2.8	3.6	2.7
	104	40.0	2.9	2.6	3.0	2.7	3.1	2.7	3.2	2.8	3.2	2.8	3.2	2.7	3.2	2.6
	113	45.0	2.7	2.5	2.8	2.6	2.9	2.6	3.0	2.8	3.0	2.7	3.0	2.6	3.0	2.5
40 (4.5)	50	10.0	4.1	3.3	4.2	3.5	4.4	3.4	4.5	3.6	4.5	3.6	4.5	3.4	4.5	3.3
	68	20.0	4.1	3.3	4.2	3.5	4.4	3.4	4.5	3.6	4.5	3.6	4.5	3.4	4.5	3.3
	86	30.0	4.1	3.3	4.2	3.5	4.4	3.4	4.5	3.6	4.5	3.6	4.5	3.4	4.5	3.3
	104	40.0	3.6	3.1	3.7	3.3	3.9	3.2	4.0	3.4	4.0	3.4	4.0	3.2	4.0	3.1
	113	45.0	3.4	3.0	3.5	3.2	3.7	3.1	3.8	3.3	3.8	3.3	3.8	3.2	3.8	3.1
50 (5.6)	50	10.0	5.0	3.9	5.2	4.0	5.5	3.9	5.6	4.1	5.6	4.0	5.6	3.9	5.6	3.7
	68	20.0	5.0	3.9	5.2	4.0	5.5	3.9	5.6	4.1	5.6	4.0	5.6	3.9	5.6	3.7
	86	30.0	5.0	3.9	5.2	4.0	5.5	3.9	5.6	4.1	5.6	4.0	5.6	3.9	5.6	3.7
	104	40.0	4.5	3.6	4.6	3.7	4.9	3.6	5.0	3.9	5.0	3.8	5.0	3.6	5.0	3.5
	113	45.0	4.2	3.5	4.3	3.6	4.6	3.5	4.7	3.8	4.7	3.7	4.7	3.5	4.7	3.4
63 (7.1)	50	10.0	6.4	4.7	6.6	4.9	6.9	4.8	7.1	5.0	7.1	4.9	7.1	4.7	7.1	4.5
	68	20.0	6.4	4.7	6.6	4.9	6.9	4.8	7.1	5.0	7.1	4.9	7.1	4.7	7.1	4.5
	86	30.0	6.4	4.7	6.6	4.9	6.9	4.8	7.1	5.0	7.1	4.9	7.1	4.7	7.1	4.5
	104	40.0	5.7	4.4	5.8	4.5	6.2	4.4	6.3	4.7	6.3	4.6	6.3	4.4	6.3	4.2
	113	45.0	5.3	4.2	5.5	4.3	5.8	4.3	5.9	4.6	5.9	4.5	5.9	4.3	5.9	4.1
80 (9.0)	50	10.0	8.1	5.9	8.3	6.0	8.8	5.9	9.0	6.3	9.0	6.1	9.0	5.8	9.0	5.5
	68	20.0	8.1	5.9	8.3	6.0	8.8	5.9	9.0	6.3	9.0	6.1	9.0	5.8	9.0	5.5
	86	30.0	8.1	5.9	8.3	6.0	8.8	5.9	9.0	6.3	9.0	6.1	9.0	5.8	9.0	5.5
	104	40.0	7.2	5.4	7.4	5.6	7.8	5.5	8.0	5.8	8.0	5.7	8.0	5.4	8.0	5.2
	113	45.0	6.8	5.2	7.0	5.4	7.3	5.3	7.5	5.6	7.5	5.5	7.5	5.2	7.5	5.0
100 (11.2)	50	10.0	10.1	7.4	10.4	7.5	10.9	7.4	11.2	7.8	11.2	7.6	11.2	7.3	11.2	6.9
	68	20.0	10.1	7.4	10.4	7.5	10.9	7.4	11.2	7.8	11.2	7.6	11.2	7.3	11.2	6.9
	86	30.0	10.1	7.4	10.4	7.5	10.9	7.4	11.2	7.8	11.2	7.6	11.2	7.3	11.2	6.9
	104	40.0	9.0	6.8	9.2	7.0	9.7	6.9	10.0	7.3	10.0	7.1	10.0	6.8	10.0	6.5
	113	45.0	8.4	6.5	8.7	6.7	9.1	6.6	9.4	7.0	9.4	6.9	9.4	6.6	9.4	6.3
125 (14.0)	50	10.0	12.6	8.9	13.0	9.2	13.7	9.0	14.0	9.5	14.0	9.2	14.0	8.8	14.0	8.3
	68	20.0	12.6	8.9	13.0	9.2	13.7	9.0	14.0	9.5	14.0	9.2	14.0	8.8	14.0	8.3
	86	30.0	12.6	8.9	13.0	9.2	13.7	9.0	14.0	9.5	14.0	9.2	14.0	8.8	14.0	8.3
	104	40.0	11.2	8.2	11.5	8.4	12.1	8.3	12.5	8.8	12.5	8.6	12.5	8.2	12.5	7.8
	113	45.0	10.5	7.9	10.8	8.1	11.4	8.0	11.7	8.4	11.7	8.2	11.7	7.9	11.7	7.5

kcal/h = kW x 860, Btu/h = kW x 3,412

7.CAPACITY TABLES (Indoor unit)

H1. Cooling capacity with PQHY-P650-900YSHM

PCFY-P-VKM-E

CA : Capacity(kW) SHC : Sensible Heat Capacity(kW)

Model size (Rated kW)	Water temp.		Indoor air temp.													
			71 ˚FDB / 59˚FWB		73˚FDB / 61˚FWB		77˚FDB / 64˚FWB		81˚FDB / 66˚FWB		82˚FDB / 68˚FWB		86˚FDB / 72˚FWB		90˚FDB / 75˚FWB	
			21.5˚CDB / 15˚CWB		23˚CDB / 16˚CWB		25˚CDB / 18˚CWB		27˚CDB / 19˚CWB		28˚CDB / 20˚CWB		30˚CDB / 22˚CWB		32˚CDB / 24˚CWB	
	˚F	˚C	CA	SHC	CA	SHC	CA	SHC	CA	SHC	CA	SHC	CA	SHC	CA	SHC
40 (4.5)	50	10.0	4.1	3.0	4.2	3.0	4.4	3.0	4.5	3.2	4.5	3.1	4.5	2.9	4.5	2.8
	68	20.0	4.1	3.0	4.2	3.0	4.4	3.0	4.5	3.2	4.5	3.1	4.5	2.9	4.5	2.8
	86	30.0	4.1	3.0	4.2	3.0	4.4	3.0	4.5	3.2	4.5	3.1	4.5	2.9	4.5	2.8
	104	40.0	3.6	2.7	3.7	2.8	3.9	2.8	4.0	2.9	4.0	2.9	4.0	2.7	4.0	2.6
	113	45.0	3.4	2.6	3.5	2.7	3.7	2.7	3.8	2.8	3.8	2.8	3.8	2.7	3.8	2.5
63 (7.1)	50	10.0	6.4	4.6	6.6	4.7	6.9	4.7	7.1	4.9	7.1	4.8	7.1	4.5	7.1	4.3
	68	20.0	6.4	4.6	6.6	4.7	6.9	4.7	7.1	4.9	7.1	4.8	7.1	4.5	7.1	4.3
	86	30.0	6.4	4.6	6.6	4.7	6.9	4.7	7.1	4.9	7.1	4.8	7.1	4.5	7.1	4.3
	104	40.0	5.7	4.2	5.8	4.4	6.2	4.3	6.3	4.5	6.3	4.4	6.3	4.2	6.3	4.0
	113	45.0	5.3	4.1	5.5	4.2	5.8	4.1	5.9	4.4	5.9	4.3	5.9	4.1	5.9	3.9
100 (11.2)	50	10.0	10.1	7.1	10.4	7.3	10.9	7.2	11.2	7.5	11.2	7.4	11.2	7.0	11.2	6.6
	68	20.0	10.1	7.1	10.4	7.3	10.9	7.2	11.2	7.5	11.2	7.4	11.2	7.0	11.2	6.6
	86	30.0	10.1	7.1	10.4	7.3	10.9	7.2	11.2	7.5	11.2	7.4	11.2	7.0	11.2	6.6
	104	40.0	9.0	6.6	9.2	6.7	9.7	6.6	10.0	7.0	10.0	6.8	10.0	6.5	10.0	6.2
	113	45.0	8.4	6.3	8.7	6.5	9.1	6.4	9.4	6.7	9.4	6.6	9.4	6.3	9.4	6.0
125 (14.0)	50	10.0	12.6	8.9	13.0	9.1	13.7	8.9	14.0	9.4	14.0	9.1	14.0	8.7	14.0	8.2
	68	20.0	12.6	8.9	13.0	9.1	13.7	8.9	14.0	9.4	14.0	9.1	14.0	8.7	14.0	8.2
	86	30.0	12.6	8.9	13.0	9.1	13.7	8.9	14.0	9.4	14.0	9.1	14.0	8.7	14.0	8.2
	104	40.0	11.2	8.2	11.5	8.4	12.1	8.2	12.5	8.7	12.5	8.5	12.5	8.1	12.5	7.7
	113	45.0	10.5	7.8	10.8	8.0	11.4	7.9	11.7	8.3	11.7	8.1	11.7	7.8	11.7	7.4

kcal/h = kW x 860, Btu/h = kW x 3,412

7.CAPACITY TABLES (Indoor unit)

I1. Cooling capacity with PQHY-P650-900YSHM

PKFY-P-VBM-E,VHM-E,VKM-E

CA : Capacity(kW) SHC : Sensible Heat Capacity(kW)

Model size (Rated kW)	Water temp.		Indoor air temp.													
			71 ˚FDB / 59˚FWB		73˚FDB / 61˚FWB		77˚FDB / 64˚FWB		81˚FDB / 66˚FWB		82˚FDB / 68˚FWB		86˚FDB / 72˚FWB		90˚FDB / 75˚FWB	
			21.5˚CDB / 15˚CWB		23˚CDB / 16˚CWB		25˚CDB / 18˚CWB		27˚CDB / 19˚CWB		28˚CDB / 20˚CWB		30˚CDB / 22˚CWB		32˚CDB / 24˚CWB	
	˚F	˚C	CA	SHC	CA	SHC	CA	SHC	CA	SHC	CA	SHC	CA	SHC	CA	SHC
15 (1.7)	50	10.0	1.5	1.1	1.6	1.1	1.7	1.1	1.7	1.2	1.7	1.2	1.7	1.1	1.7	1.1
	68	20.0	1.5	1.1	1.6	1.1	1.7	1.1	1.7	1.2	1.7	1.2	1.7	1.1	1.7	1.1
	86	30.0	1.5	1.1	1.6	1.1	1.7	1.1	1.7	1.2	1.7	1.2	1.7	1.1	1.7	1.1
	104	40.0	1.4	1.0	1.4	1.1	1.5	1.1	1.5	1.1	1.5	1.1	1.5	1.0	1.5	1.0
	113	45.0	1.3	1.0	1.3	1.0	1.4	1.0	1.4	1.1	1.4	1.1	1.4	1.0	1.4	1.0
20 (2.2)	50	10.0	2.0	1.4	2.0	1.5	2.1	1.4	2.2	1.5	2.2	1.5	2.2	1.4	2.2	1.3
	68	20.0	2.0	1.4	2.0	1.5	2.1	1.4	2.2	1.5	2.2	1.5	2.2	1.4	2.2	1.3
	86	30.0	2.0	1.4	2.0	1.5	2.1	1.4	2.2	1.5	2.2	1.5	2.2	1.4	2.2	1.3
	104	40.0	1.8	1.3	1.8	1.4	1.9	1.3	2.0	1.4	2.0	1.4	2.0	1.3	2.0	1.3
	113	45.0	1.7	1.3	1.7	1.3	1.8	1.3	1.8	1.4	1.8	1.3	1.8	1.3	1.8	1.2
25 (2.8)	50	10.0	2.5	1.8	2.6	1.8	2.7	1.8	2.8	1.9	2.8	1.9	2.8	1.8	2.8	1.7
	68	20.0	2.5	1.8	2.6	1.8	2.7	1.8	2.8	1.9	2.8	1.9	2.8	1.8	2.8	1.7
	86	30.0	2.5	1.8	2.6	1.8	2.7	1.8	2.8	1.9	2.8	1.9	2.8	1.8	2.8	1.7
	104	40.0	2.2	1.7	2.3	1.7	2.4	1.7	2.5	1.8	2.5	1.7	2.5	1.6	2.5	1.6
	113	45.0	2.1	1.6	2.2	1.6	2.3	1.6	2.3	1.7	2.3	1.7	2.3	1.6	2.3	1.5
32 (3.6)	50	10.0	3.2	2.5	3.3	2.6	3.5	2.6	3.6	2.7	3.6	2.7	3.6	2.6	3.6	2.4
	68	20.0	3.2	2.5	3.3	2.6	3.5	2.6	3.6	2.7	3.6	2.7	3.6	2.6	3.6	2.4
	86	30.0	3.2	2.5	3.3	2.6	3.5	2.6	3.6	2.7	3.6	2.7	3.6	2.6	3.6	2.4
	104	40.0	2.9	2.4	3.0	2.4	3.1	2.4	3.2	2.6	3.2	2.5	3.2	2.4	3.2	2.3
	113	45.0	2.7	2.3	2.8	2.4	2.9	2.3	3.0	2.5	3.0	2.4	3.0	2.3	3.0	2.2
40 (4.5)	50	10.0	4.1	3.1	4.2	3.2	4.4	3.1	4.5	3.3	4.5	3.2	4.5	3.1	4.5	3.0
	68	20.0	4.1	3.1	4.2	3.2	4.4	3.1	4.5	3.3	4.5	3.2	4.5	3.1	4.5	3.0
	86	30.0	4.1	3.1	4.2	3.2	4.4	3.1	4.5	3.3	4.5	3.2	4.5	3.1	4.5	3.0
	104	40.0	3.6	2.9	3.7	3.0	3.9	2.9	4.0	3.1	4.0	3.0	4.0	2.9	4.0	2.8
	113	45.0	3.4	2.8	3.5	2.9	3.7	2.8	3.8	3.0	3.8	2.9	3.8	2.8	3.8	2.7
50 (5.6)	50	10.0	5.0	3.6	5.2	3.7	5.5	3.7	5.6	3.9	5.6	3.8	5.6	3.6	5.6	3.4
	68	20.0	5.0	3.6	5.2	3.7	5.5	3.7	5.6	3.9	5.6	3.8	5.6	3.6	5.6	3.4
	86	30.0	5.0	3.6	5.2	3.7	5.5	3.7	5.6	3.9	5.6	3.8	5.6	3.6	5.6	3.4
	104	40.0	4.5	3.4	4.6	3.4	4.9	3.4	5.0	3.6	5.0	3.5	5.0	3.3	5.0	3.2
	113	45.0	4.2	3.2	4.3	3.3	4.6	3.3	4.7	3.5	4.7	3.4	4.7	3.2	4.7	3.1
63 (7.1)	50	10.0	6.4	5.0	6.6	5.2	6.9	5.1	7.1	5.4	7.1	5.3	7.1	5.1	7.1	4.9
	68	20.0	6.4	5.0	6.6	5.2	6.9	5.1	7.1	5.4	7.1	5.3	7.1	5.1	7.1	4.9
	86	30.0	6.4	5.0	6.6	5.2	6.9	5.1	7.1	5.4	7.1	5.3	7.1	5.1	7.1	4.9
	104	40.0	5.7	4.7	5.8	4.8	6.2	4.8	6.3	5.1	6.3	5.0	6.3	4.8	6.3	4.6
	113	45.0	5.3	4.5	5.5	4.7	5.8	4.6	5.9	4.9	5.9	4.8	5.9	4.7	5.9	4.5
100 (11.2)	50	10.0	10.1	7.3	10.4	7.5	10.9	7.4	11.2	7.8	11.2	7.6	11.2	7.3	11.2	6.9
	68	20.0	10.1	7.3	10.4	7.5	10.9	7.4	11.2	7.8	11.2	7.6	11.2	7.3	11.2	6.9
	86	30.0	10.1	7.3	10.4	7.5	10.9	7.4	11.2	7.8	11.2	7.6	11.2	7.3	11.2	6.9
	104	40.0	9.0	6.8	9.2	7.0	9.7	6.9	10.0	7.3	10.0	7.1	10.0	6.8	10.0	6.5
	113	45.0	8.4	6.5	8.7	6.7	9.1	6.6	9.4	7.0	9.4	6.9	9.4	6.6	9.4	6.3

kcal/h = kW x 860, Btu/h = kW x 3,412

7.CAPACITY TABLES (Indoor unit)

J1. Cooling capacity with PQHY-P650-900YSHM

PFFY-P-VKM-E

CA : Capacity(kW) SHC : Sensible Heat Capacity(kW)

Model size (Rated kW)	Water temp.		Indoor air temp.													
			71 ˚FDB / 59˚FWB		73˚FDB / 61˚FWB		77˚FDB / 64˚FWB		81˚FDB / 66˚FWB		82˚FDB / 68˚FWB		86˚FDB / 72˚FWB		90˚FDB / 75˚FWB	
			21.5˚CDB / 15˚CWB		23˚CDB / 16˚CWB		25˚CDB / 18˚CWB		27˚CDB / 19˚CWB		28˚CDB / 20˚CWB		30˚CDB / 22˚CWB		32˚CDB / 24˚CWB	
	˚F	˚C	CA	SHC	CA	SHC	CA	SHC	CA	SHC	CA	SHC	CA	SHC	CA	SHC
20 (2.2)	50	10.0	2.0	1.6	2.0	1.7	2.1	1.7	2.2	1.8	2.2	1.7	2.2	1.7	2.2	1.6
	68	20.0	2.0	1.6	2.0	1.7	2.1	1.7	2.2	1.8	2.2	1.7	2.2	1.7	2.2	1.6
	86	30.0	2.0	1.6	2.0	1.7	2.1	1.7	2.2	1.8	2.2	1.7	2.2	1.7	2.2	1.6
	104	40.0	1.8	1.5	1.8	1.6	1.9	1.6	2.0	1.7	2.0	1.6	2.0	1.6	2.0	1.5
	113	45.0	1.7	1.5	1.7	1.5	1.8	1.5	1.8	1.6	1.8	1.6	1.8	1.5	1.8	1.5
25 (2.8)	50	10.0	2.5	1.9	2.6	2.0	2.7	1.9	2.8	2.1	2.8	2.0	2.8	1.9	2.8	1.8
	68	20.0	2.5	1.9	2.6	2.0	2.7	1.9	2.8	2.1	2.8	2.0	2.8	1.9	2.8	1.8
	86	30.0	2.5	1.9	2.6	2.0	2.7	1.9	2.8	2.1	2.8	2.0	2.8	1.9	2.8	1.8
	104	40.0	2.2	1.8	2.3	1.8	2.4	1.8	2.5	1.9	2.5	1.9	2.5	1.8	2.5	1.7
	113	45.0	2.1	1.7	2.2	1.8	2.3	1.8	2.3	1.9	2.3	1.8	2.3	1.8	2.3	1.7
32 (3.6)	50	10.0	3.2	2.3	3.3	2.4	3.5	2.4	3.6	2.5	3.6	2.4	3.6	2.3	3.6	2.2
	68	20.0	3.2	2.3	3.3	2.4	3.5	2.4	3.6	2.5	3.6	2.4	3.6	2.3	3.6	2.2
	86	30.0	3.2	2.3	3.3	2.4	3.5	2.4	3.6	2.5	3.6	2.4	3.6	2.3	3.6	2.2
	104	40.0	2.9	2.1	3.0	2.2	3.1	2.2	3.2	2.3	3.2	2.2	3.2	2.1	3.2	2.0
	113	45.0	2.7	2.1	2.8	2.1	2.9	2.1	3.0	2.2	3.0	2.2	3.0	2.1	3.0	2.0
40 (4.5)	50	10.0	4.1	2.9	4.2	2.9	4.4	2.9	4.5	3.0	4.5	3.0	4.5	2.8	4.5	2.7
	68	20.0	4.1	2.9	4.2	2.9	4.4	2.9	4.5	3.0	4.5	3.0	4.5	2.8	4.5	2.7
	86	30.0	4.1	2.9	4.2	2.9	4.4	2.9	4.5	3.0	4.5	3.0	4.5	2.8	4.5	2.7
	104	40.0	3.6	2.6	3.7	2.7	3.9	2.7	4.0	2.8	4.0	2.8	4.0	2.6	4.0	2.5
	113	45.0	3.4	2.5	3.5	2.6	3.7	2.6	3.8	2.7	3.8	2.6	3.8	2.5	3.8	2.4

kcal/h = kW x 860, Btu/h = kW x 3,412

7.CAPACITY TABLES (Indoor unit)

J1. Cooling capacity with PQHY-P650-900YSHM

PFFY-P-VLEM-E,VLRM-E

CA : Capacity(kW) SHC : Sensible Heat Capacity(kW)

Model size (Rated kW)	Water temp.		Indoor air temp.													
			71 ˚FDB / 59˚FWB		73˚FDB / 61˚FWB		77˚FDB / 64˚FWB		81˚FDB / 66˚FWB		82˚FDB / 68˚FWB		86˚FDB / 72˚FWB		90˚FDB / 75˚FWB	
			21.5˚CDB / 15˚CWB		23˚CDB / 16˚CWB		25˚CDB / 18˚CWB		27˚CDB / 19˚CWB		28˚CDB / 20˚CWB		30˚CDB / 22˚CWB		32˚CDB / 24˚CWB	
	˚F	˚C	CA	SHC	CA	SHC	CA	SHC	CA	SHC	CA	SHC	CA	SHC	CA	SHC
20 (2.2)	50	10.0	2.0	1.6	2.0	1.7	2.1	1.6	2.2	1.7	2.2	1.7	2.2	1.6	2.2	1.6
	68	20.0	2.0	1.6	2.0	1.7	2.1	1.6	2.2	1.7	2.2	1.7	2.2	1.6	2.2	1.6
	86	30.0	2.0	1.6	2.0	1.7	2.1	1.6	2.2	1.7	2.2	1.7	2.2	1.6	2.2	1.6
	104	40.0	1.8	1.5	1.8	1.6	1.9	1.5	2.0	1.6	2.0	1.6	2.0	1.6	2.0	1.5
	113	45.0	1.7	1.5	1.7	1.5	1.8	1.5	1.8	1.6	1.8	1.6	1.8	1.5	1.8	1.5
25 (2.8)	50	10.0	2.5	1.9	2.6	1.9	2.7	1.9	2.8	2.0	2.8	2.0	2.8	1.9	2.8	1.8
	68	20.0	2.5	1.9	2.6	1.9	2.7	1.9	2.8	2.0	2.8	2.0	2.8	1.9	2.8	1.8
	86	30.0	2.5	1.9	2.6	1.9	2.7	1.9	2.8	2.0	2.8	2.0	2.8	1.9	2.8	1.8
	104	40.0	2.2	1.7	2.3	1.8	2.4	1.8	2.5	1.9	2.5	1.8	2.5	1.7	2.5	1.7
	113	45.0	2.1	1.7	2.2	1.7	2.3	1.7	2.3	1.8	2.3	1.8	2.3	1.7	2.3	1.6
32 (3.6)	50	10.0	3.2	2.4	3.3	2.5	3.5	2.4	3.6	2.5	3.6	2.5	3.6	2.4	3.6	2.3
	68	20.0	3.2	2.4	3.3	2.5	3.5	2.4	3.6	2.5	3.6	2.5	3.6	2.4	3.6	2.3
	86	30.0	3.2	2.4	3.3	2.5	3.5	2.4	3.6	2.5	3.6	2.5	3.6	2.4	3.6	2.3
	104	40.0	2.9	2.2	3.0	2.3	3.1	2.2	3.2	2.4	3.2	2.3	3.2	2.2	3.2	2.1
	113	45.0	2.7	2.1	2.8	2.2	2.9	2.2	3.0	2.3	3.0	2.2	3.0	2.1	3.0	2.1
40 (4.5)	50	10.0	4.1	3.0	4.2	3.1	4.4	3.0	4.5	3.2	4.5	3.1	4.5	3.0	4.5	2.8
	68	20.0	4.1	3.0	4.2	3.1	4.4	3.0	4.5	3.2	4.5	3.1	4.5	3.0	4.5	2.8
	86	30.0	4.1	3.0	4.2	3.1	4.4	3.0	4.5	3.2	4.5	3.1	4.5	3.0	4.5	2.8
	104	40.0	3.6	2.8	3.7	2.9	3.9	2.8	4.0	3.0	4.0	2.9	4.0	2.8	4.0	2.7
	113	45.0	3.4	2.7	3.5	2.8	3.7	2.7	3.8	2.9	3.8	2.8	3.8	2.7	3.8	2.6
50 (5.6)	50	10.0	5.0	3.8	5.2	3.9	5.5	3.8	5.6	4.1	5.6	4.0	5.6	3.8	5.6	3.6
	68	20.0	5.0	3.8	5.2	3.9	5.5	3.8	5.6	4.1	5.6	4.0	5.6	3.8	5.6	3.6
	86	30.0	5.0	3.8	5.2	3.9	5.5	3.8	5.6	4.1	5.6	4.0	5.6	3.8	5.6	3.6
	104	40.0	4.5	3.5	4.6	3.6	4.9	3.6	5.0	3.8	5.0	3.7	5.0	3.6	5.0	3.4
	113	45.0	4.2	3.4	4.3	3.5	4.6	3.4	4.7	3.7	4.7	3.6	4.7	3.4	4.7	3.3
63 (7.1)	50	10.0	6.4	4.7	6.6	4.8	6.9	4.7	7.1	5.0	7.1	4.9	7.1	4.6	7.1	4.4
	68	20.0	6.4	4.7	6.6	4.8	6.9	4.7	7.1	5.0	7.1	4.9	7.1	4.6	7.1	4.4
	86	30.0	6.4	4.7	6.6	4.8	6.9	4.7	7.1	5.0	7.1	4.9	7.1	4.6	7.1	4.4
	104	40.0	5.7	4.3	5.8	4.5	6.2	4.4	6.3	4.7	6.3	4.6	6.3	4.3	6.3	4.2
	113	45.0	5.3	4.2	5.5	4.3	5.8	4.2	5.9	4.5	5.9	4.4	5.9	4.2	5.9	4.0

kcal/h = kW x 860, Btu/h = kW x 3,412

7.CAPACITY TABLES (Indoor unit)

J1. Cooling capacity with PQHY-P650-900YSHM

PFFY-P-VLRMM-E

CA : Capacity(kW) SHC : Sensible Heat Capacity(kW)

Model size (Rated kW)	Water temp.		Indoor air temp.													
			71 ˚FDB / 59˚FWB		73˚FDB / 61˚FWB		77˚FDB / 64˚FWB		81˚FDB / 66˚FWB		82˚FDB / 68˚FWB		86˚FDB / 72˚FWB		90˚FDB / 75˚FWB	
			21.5˚CDB / 15˚CWB		23˚CDB / 16˚CWB		25˚CDB / 18˚CWB		27˚CDB / 19˚CWB		28˚CDB / 20˚CWB		30˚CDB / 22˚CWB		32˚CDB / 24˚CWB	
	˚F	˚C	CA	SHC	CA	SHC	CA	SHC	CA	SHC	CA	SHC	CA	SHC	CA	SHC
20 (2.2)	50	10.0	2.0	1.6	2.0	1.7	2.1	1.6	2.2	1.7	2.2	1.7	2.2	1.6	2.2	1.6
	68	20.0	2.0	1.6	2.0	1.7	2.1	1.6	2.2	1.7	2.2	1.7	2.2	1.6	2.2	1.6
	86	30.0	2.0	1.6	2.0	1.7	2.1	1.6	2.2	1.7	2.2	1.7	2.2	1.6	2.2	1.6
	104	40.0	1.8	1.5	1.8	1.6	1.9	1.5	2.0	1.6	2.0	1.6	2.0	1.6	2.0	1.5
	113	45.0	1.7	1.5	1.7	1.5	1.8	1.5	1.8	1.6	1.8	1.6	1.8	1.5	1.8	1.5
25 (2.8)	50	10.0	2.5	1.9	2.6	1.9	2.7	1.9	2.8	2.0	2.8	2.0	2.8	1.9	2.8	1.8
	68	20.0	2.5	1.9	2.6	1.9	2.7	1.9	2.8	2.0	2.8	2.0	2.8	1.9	2.8	1.8
	86	30.0	2.5	1.9	2.6	1.9	2.7	1.9	2.8	2.0	2.8	2.0	2.8	1.9	2.8	1.8
	104	40.0	2.2	1.7	2.3	1.8	2.4	1.8	2.5	1.9	2.5	1.8	2.5	1.7	2.5	1.7
	113	45.0	2.1	1.7	2.2	1.7	2.3	1.7	2.3	1.8	2.3	1.8	2.3	1.7	2.3	1.6
32 (3.6)	50	10.0	3.2	2.4	3.3	2.5	3.5	2.4	3.6	2.5	3.6	2.5	3.6	2.4	3.6	2.3
	68	20.0	3.2	2.4	3.3	2.5	3.5	2.4	3.6	2.5	3.6	2.5	3.6	2.4	3.6	2.3
	86	30.0	3.2	2.4	3.3	2.5	3.5	2.4	3.6	2.5	3.6	2.5	3.6	2.4	3.6	2.3
	104	40.0	2.9	2.2	3.0	2.3	3.1	2.2	3.2	2.4	3.2	2.3	3.2	2.2	3.2	2.1
	113	45.0	2.7	2.1	2.8	2.2	2.9	2.2	3.0	2.3	3.0	2.2	3.0	2.1	3.0	2.1
40 (4.5)	50	10.0	4.1	3.0	4.2	3.1	4.4	3.0	4.5	3.2	4.5	3.1	4.5	3.0	4.5	2.8
	68	20.0	4.1	3.0	4.2	3.1	4.4	3.0	4.5	3.2	4.5	3.1	4.5	3.0	4.5	2.8
	86	30.0	4.1	3.0	4.2	3.1	4.4	3.0	4.5	3.2	4.5	3.1	4.5	3.0	4.5	2.8
	104	40.0	3.6	2.8	3.7	2.9	3.9	2.8	4.0	3.0	4.0	2.9	4.0	2.8	4.0	2.7
	113	45.0	3.4	2.7	3.5	2.8	3.7	2.7	3.8	2.9	3.8	2.8	3.8	2.7	3.8	2.6
50 (5.6)	50	10.0	5.0	3.8	5.2	3.9	5.5	3.8	5.6	4.1	5.6	4.0	5.6	3.8	5.6	3.6
	68	20.0	5.0	3.8	5.2	3.9	5.5	3.8	5.6	4.1	5.6	4.0	5.6	3.8	5.6	3.6
	86	30.0	5.0	3.8	5.2	3.9	5.5	3.8	5.6	4.1	5.6	4.0	5.6	3.8	5.6	3.6
	104	40.0	4.5	3.5	4.6	3.6	4.9	3.6	5.0	3.8	5.0	3.7	5.0	3.6	5.0	3.4
	113	45.0	4.2	3.4	4.3	3.5	4.6	3.4	4.7	3.7	4.7	3.6	4.7	3.4	4.7	3.3
63 (7.1)	50	10.0	6.4	4.7	6.6	4.8	6.9	4.7	7.1	5.0	7.1	4.9	7.1	4.6	7.1	4.4
	68	20.0	6.4	4.7	6.6	4.8	6.9	4.7	7.1	5.0	7.1	4.9	7.1	4.6	7.1	4.4
	86	30.0	6.4	4.7	6.6	4.8	6.9	4.7	7.1	5.0	7.1	4.9	7.1	4.6	7.1	4.4
	104	40.0	5.7	4.3	5.8	4.5	6.2	4.4	6.3	4.7	6.3	4.6	6.3	4.3	6.3	4.2
	113	45.0	5.3	4.2	5.5	4.3	5.8	4.2	5.9	4.5	5.9	4.4	5.9	4.2	5.9	4.0

kcal/h = kW x 860, Btu/h = kW x 3,412

7. CAPACITY TABLES (Indoor unit)

X1. Heating capacity with PQHY-P650-900YSHM

SHC : Sensible Heat Capacity(kW)

Model size (Rated kW)	Water temp.		Indoor air temp. : ˚CDB				
			59 ˚FDB	66 ˚FDB	68 ˚FDB	77 ˚FDB	81 ˚FDB
			15.0˚CDB	19.0˚CDB	20.0˚CDB	25.0˚CDB	27.0˚CDB
	˚F	˚C	SHC	SHC	SHC	SHC	SHC
15 (1.9)	50	10	1.6	1.6	1.6	1.4	1.2
	68	20	1.9	1.9	1.9	1.6	1.4
	86	30	1.9	1.9	1.9	1.6	1.4
	104	40	1.9	1.9	1.9	1.6	1.4
	113	45	1.9	1.9	1.9	1.6	1.4
20 (2.5)	50	10	2.2	2.2	2.2	1.8	1.6
	68	20	2.5	2.5	2.5	2.1	1.9
	86	30	2.5	2.5	2.5	2.1	1.9
	104	40	2.5	2.5	2.5	2.1	1.9
	113	45	2.5	2.5	2.5	2.1	1.9
25 (3.2)	50	10	2.8	2.8	2.8	2.3	2.1
	68	20	3.2	3.2	3.2	2.6	2.4
	86	30	3.2	3.2	3.2	2.6	2.4
	104	40	3.2	3.2	3.2	2.6	2.4
	113	45	3.2	3.2	3.2	2.6	2.4
32 (4.0)	50	10	3.5	3.5	3.5	2.8	2.6
	68	20	4.0	4.0	4.0	3.3	3.0
	86	30	4.0	4.0	4.0	3.3	3.0
	104	40	4.0	4.0	4.0	3.3	3.0
	113	45	4.0	4.0	4.0	3.3	3.0
40 (5.0)	50	10	4.3	4.3	4.3	3.6	3.2
	68	20	5.0	5.0	5.0	4.1	3.8
	86	30	5.0	5.0	5.0	4.1	3.8
	104	40	5.0	5.0	5.0	4.1	3.8
	113	45	5.0	5.0	5.0	4.1	3.8
50 (6.3)	50	10	5.4	5.4	5.4	4.5	4.1
	68	20	6.3	6.3	6.3	5.2	4.7
	86	30	6.3	6.3	6.3	5.2	4.7
	104	40	6.3	6.3	6.3	5.2	4.7
	113	45	6.3	6.3	6.3	5.2	4.7
63 (8.0)	50	10	6.9	6.9	6.9	5.7	5.2
	68	20	8.0	8.0	8.0	6.6	6.0
	86	30	8.0	8.0	8.0	6.6	6.0
	104	40	8.0	8.0	8.0	6.6	6.0
	113	45	8.0	8.0	8.0	6.6	6.0
71 (9.0)	50	10	7.8	7.8	7.8	6.4	5.8
	68	20	9.0	9.0	9.0	7.4	6.8
	86	30	9.0	9.0	9.0	7.4	6.8
	104	40	9.0	9.0	9.0	7.4	6.8
	113	45	9.0	9.0	9.0	7.4	6.8
80 (10.0)	50	10	8.6	8.6	8.6	7.1	6.5
	68	20	10.0	10.0	10.0	8.2	7.5
	86	30	10.0	10.0	10.0	8.2	7.5
	104	40	10.0	10.0	10.0	8.2	7.5
	113	45	10.0	10.0	10.0	8.2	7.5
100 (12.5)	50	10	10.8	10.8	10.8	8.9	8.1
	68	20	12.5	12.5	12.5	10.3	9.4
	86	30	12.5	12.5	12.5	10.3	9.4
	104	40	12.5	12.5	12.5	10.3	9.4
	113	45	12.5	12.5	12.5	10.3	9.4
125 (16.0)	50	10	13.8	13.8	13.8	11.4	10.4
	68	20	16.0	16.0	16.0	13.2	12.0
	86	30	16.0	16.0	16.0	13.2	12.0
	104	40	16.0	16.0	16.0	13.2	12.0
	113	45	16.0	16.0	16.0	13.2	12.0
140 (18.0)	50	10	15.6	15.6	15.6	12.8	11.7
	68	20	18.0	18.0	18.0	14.8	13.5
	86	30	18.0	18.0	18.0	14.8	13.5
	104	40	18.0	18.0	18.0	14.8	13.5
	113	45	18.0	18.0	18.0	14.8	13.5
200 (25.0)	50	10	21.6	21.6	21.6	17.8	16.2
	68	20	25.0	25.0	25.0	20.6	18.8
	86	30	25.0	25.0	25.0	20.6	18.8
	104	40	25.0	25.0	25.0	20.6	18.8
	113	45	25.0	25.0	25.0	20.6	18.8
250 (31.5)	50	10	27.2	27.2	27.2	22.4	20.5
	68	20	31.5	31.5	31.5	25.9	23.7
	86	30	31.5	31.5	31.5	25.9	23.7
	104	40	31.5	31.5	31.5	25.9	23.7
	113	45	31.5	31.5	31.5	25.9	23.7

kcal/h = kW x 860, Btu/h = kW x 3,412

8-1. Designing of water circuit system

1) Example of basic water circuit

The water circuit of the water heat source CITY MULTI connects the heat source unit with the cooling tower/auxiliary heat source/heat storage tank/circulation pump with a single system water piping as shown in the figure below. The selector valve automatically controls to circulate water toward the cooling tower in the cooling season, while toward the heat storage tank in the heating season. If the circulation water temperature is kept in a range of 10~45°C[50~113°F]* regardless of the building load, the water heat source CITY MULTI can be operated for either cooling or heating. Therefore in the summer when only cooling load exists, the temperature rise of circulation water will be suppressed by operating the cooling tower. While in the winter when heating load increases, the temperature of circulation water may be dropped below 10°C[50°F]. Under such situation, the circulation water will be heated with the auxiliary heat source if it drops below a certain temperature.
When the thermal balance between cooling and heating operation is in a correct proportion, the operation of the auxiliary heat source and cooling tower is not required.
In order to control the above thermal balance properly and use thermal energy effectively, utilizing of heat storage tanks, and night-time discounted electric power as a auxiliary heat source will be economical.
Meantime as this system uses plural sets of heat source unit equipped with water heat exchangers, water quality control is important. Therefore it is recommended to use closed type cooling towers as much as possible to prevent the circulation water from being contaminated.
When open type cooling towers are used, it is essential to provide proper maintenance control such as that to install water treatment system to prevent troubles caused by contaminated circulation water.

Example of basic water circuit for water heat source CITY MULTI

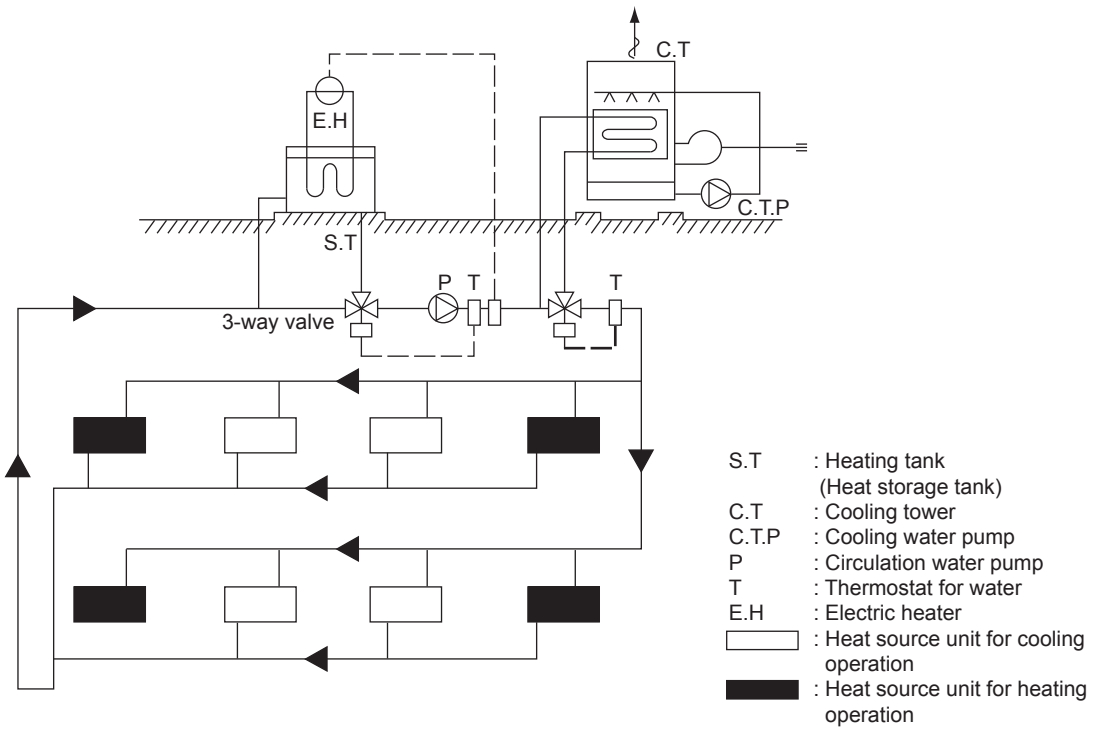

The indoor unit and refrigerant piping system are excluded in this figure.

2) Cooling tower

a) Types of cooling tower

The cooling towers presently used include the open type cooling tower, open type cooling tower + heat exchanger, closed type cooling tower, and air-cooled type cooling tower. However, as the quality control of circulation water is essential when units are installed in decentralized state inside a building, the closed type cooling tower is generally employed in such case.

Although the circulation water will not be contaminated by atmospheric air, it is recommended to periodically blow water inside the system and replenish fresh water instead.

In a district where the coil may be frozen in the winter, it is necessary to apply antifreeze solution to the circulation water, or take freeze protection measures such as to automatically discharge water inside the cooling coil at the stopping of the pump.

When the open type cooling tower is used, be sure to install a water quality control device in addition to the freeze protection measures, as the water may be deteriorated by atmospheric contaminants entered into the cooling tower and dissolved into the circulation water.

Types of cooling towers

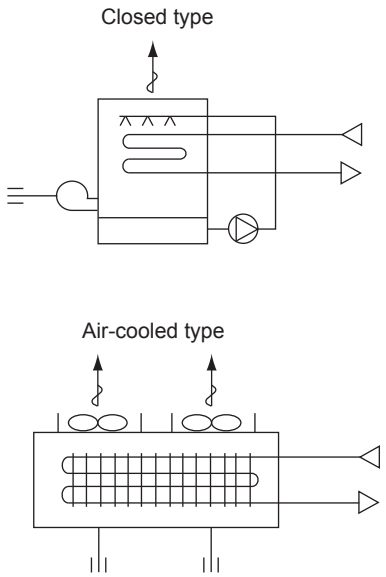

b) Calculation method of cooling tower capacity

All units of the water heat source CITY MULTI may possibly be in cooling operation temporarily (at pulling down) in the summer, however, it is not necessary to determine the capacity according to the total cooling capacity of all CITY MULTI units as this system has a wide operating water temperature range (10~45°C) [50~113°F].

It is determined in accordance with the value obtained by adding the maximum cooling load of an actual building, the input heat equivalent value of all CITY MULTI units, and the cooling load of the circulating pumps. Please check for the values of the cooling water volume and circulation water volume.

$$\text{Cooling tower capacity} = \frac{Qc + 860 \times (\Sigma Qw + Pw)}{3{,}900} \text{ (Refrigeration ton)}$$

Qc : Maximum cooling load under actual state (kcal/h)
Qw : Total input of water heat source CITY MULTI at simultaneous operation under maximum state (kW)
Pw : Shaft power of circulation pumps (kW)

$$\text{Cooling tower capacity} = \frac{Qc + 3{,}412 \times (\Sigma Qw + Pw)}{15{,}500} \text{ (Refrigeration ton)}$$

Qc : Maximum cooling load under actual state (BTU/h)
Qw : Total input of water heat source CITY MULTI at simultaneous operation under maximum state (kW)
Pw : Shaft power of circulation pumps (kW)

* 1 Refrigerant ton of cooling tower capacity ≈ US refrigerant ton x (1+0.3)
= 3,900 kcal/h = 15,500 BTU/h

3) Auxiliary heat source and heat storage tank

When the heating load is larger than the cooling load, the circulation water temperature lowers in accordance with the heat balance of the system. It should be heated by the auxiliary heat source in order to keep the inlet water temperature within the operating range (10°C[50°F] or more) of the water heat source CITY MULTI.

Further in order to operate the water heat source CITY MULTI effectively, it is recommended to utilize the heat storage tank to cover the warming up load in the morning and the insufficient heat amount.
Effective heat utilization can be expected to cover insufficient heat at the warming up in the next morning or peak load time by storing heat by installing a heat storage tank or operating a low load auxiliary heat source at the stopping of the water heat source CITY MULTI. As it can also be possible to reduce the running cost through the heat storage by using the discounted night-time electric power, using both auxiliary heat source and heat storage tank together is recommended.

The effective temperature difference of an ordinary heat storage tank shows about 5deg. even with the storing temperature at 45°C[113°F].
However with the water heat source CITY MULTI, it can be utilized as heating heat source up to 15°C[59°F] with an effective temperature of a high 30deg°C[54deg°F]. approximately, thus the capacity of the heat storage tank can be minimized.

a) Auxiliary heat source

The following can be used as the auxiliary heat source.

- Boiler (Heavy oil, kerosine, gas, electricity)
- Electric heat (Insertion of electric heater into heat storage tank)
- Outdoor air (Air-heat source heat pump chiller)
- Warm discharge water (Exhaust water heat from machines inside building and hot water supply)
- Utilization of night-time lighting
- Solar heat

Please note that the auxiliary heat source should be selected after studying your operating environment and economical feasibility.

Determining the auxiliary heat source capacity

For the CITY MULTI water heat source system, a heat storage tank is recommended to use. When employment of the heat storage tank is difficult, the warming up operation should be arranged to cover the starting up heating load. Since the holding water inside the piping circuit owns heat capacity and the warming up operation can be assumed for about one hour except that in a cold region, the heat storage tank capacity is required to be that at the maximum daily heating load including the warming up load at the next morning of the holiday. However the auxiliary heat source capacity should be determined by the daily heating load including warming up load on the week day.
For the load at the next morning of the holiday, heat storage is required by operating the auxiliary heat source even outside of the ordinary working hour.

When heat storage tank is not used

$$QH = HC_T \left(1 - \frac{1}{COP_h}\right) - 1000 \times Vw \times \Delta T - 860 \times Pw$$

QH	: Auxiliary heat source capacity	(kcal/h)
HC_T	: Total heating capacity of each water heat source CITY MULTI	(kcal/h)
COP_H	: COP of water heat source CITY MULTI at heating	
Vw	: Holding water volume inside piping	(m^3)
ΔT	: Allowable water temperature drop = T_{WH} - T_{WL}	(°C)
T_{WH}	: Heat source water temperature at high temperature side	(°C)
T_{WL}	: Heat source water temperature at low temperature side	(°C)
Pw	: Heat source water pump shaft power	(kW)

$$QH = HC_T \left(1 - \frac{1}{COP_h}\right) - 8.343 \times Vw \times \Delta T - 3412 \times Pw$$

QH	: Auxiliary heat source capacity	(BTU/h)
HC_T	: Total heating capacity of each water heat source CITY MULTI	(BTU/h)
COP_H	: COP of water heat source CITY MULTI at heating	
Vw	: Holding water volume inside piping	(G)
ΔT	: Allowable water temperature drop = T_{WH} - T_{WL}	(°F)
T_{WH}	: Heat source water temperature at high temperature side	(°F)
T_{WL}	: Heat source water temperature at low temperature side	(°F)
Pw	: Heat source water pump shaft power	(kW)

When heat storage tank is not used

$$QH = \frac{HQ_{1T} \cdot \left(1 - \frac{1}{COP_h}\right) - 860 \times Pw \times T_2}{T1} \times K \quad \text{(kcal)}$$

QH_{1T}	: Total of heating load on weekday including warming up	(kcal/day)
T_1	: Operating hour of auxiliary heat source	(h)
T_2	: Operating hour of heat source water pump	(h)
K	: Allowance factor (Heat storage tank, piping loss, etc.)	1.05~1.10

HQ_{1T} is calculated from the result of steady state load calculation similarly by using the equation below.

$HQ_{1T} = 1.15 \times (\Sigma Q'a + \Sigma Q'b + \Sigma Q'c + \Sigma Q'd + \Sigma Q'f)\, T_2 - \psi\, (\Sigma Qe_1 + \Sigma Qe_2 + \Sigma Qe_3)\, (T2 - 1)$

Q'a	: Thermal load from external wall/roof in each zone	(kcal/h)
Q'b	: Thermal load from glass window in each zone	(kcal/h)
Q'c	: Thermal load from partition/ceiling/floor in each zone	(kcal/h)
Q'd	: Thermal load by infiltration in each zone	(kcal/h)
Q'f	: Fresh outdoor air load in each zone	(kcal/h)
$Q'e_1$	: Thermal load from human body in each zone	(kcal/h)
$Q'e_2$	: Thermal load from lighting fixture in each zone	(kcal/h)
$Q'e_3$	: Thermal load from equipment in each zone	(kcal/h)
ψ	: Radiation load rate	0.6~0.8
T2	: Air conditioning hour	

$$QH = \frac{HQ_{1T} \cdot \left(1 - \frac{1}{COP_h}\right) - 3{,}412 \times Pw \times T_2}{T1} \times K \quad \text{(BTU)}$$

QH_{1T}	: Total of heating load on weekday including warming up	(BTU/day)
T_1	: Operating hour of auxiliary heat source	(h)
T_2	: Operating hour of heat source water pump	(h)
K	: Allowance factor (Heat storage tank, piping loss, etc.)	1.05~1.10

HQ_{1T} is calculated from the result of steady state load calculation similarly by using the equation below.

$HQ_{1T} = 1.15 \times (\Sigma Q'a + \Sigma Q'b + \Sigma Q'c + \Sigma Q'd + \Sigma Q'f)\, T_2 - \psi\, (\Sigma Qe_1 + \Sigma Qe_2 + \Sigma Qe_3)\, (T2 - 1)$

Q'a	: Thermal load from external wall/roof in each zone	(BTU/h)
Q'b	: Thermal load from glass window in each zone	(BTU/h)
Q'c	: Thermal load from partition/ceiling/floor in each zone	(BTU/h)
Q'd	: Thermal load by infiltration in each zone	(BTU/h)
Q'f	: Fresh outdoor air load in each zone	(BTU/h)
$Q'e_1$	: Thermal load from human body in each zone	(BTU/h)
$Q'e_2$	: Thermal load from lighting fixture in each zone	(BTU/h)
$Q'e_3$	: Thermal load from equipment in each zone	(BTU/h)
ψ	: Radiation load rate	0.6~0.8
T2	: Air conditioning hour	

b) Heat storage tank

Heat storage tank can be classified by types into the open type heat storage tank exposed to atmosphere, and the closed type heat storage tank with structure separated from atmosphere. Although the size of the tank and its installation place should be taken into account, the closed type tank is being usually employed by considering corrosion problems.

The capacity of heat storage tanks is determined in accordance with the daily maximum heating load that includes warming up load to be applied for the day after the holiday.

When auxiliary heat source is operated during operation and even after stopping of water heat source CITY MULTI unit

$$V = \frac{HQ_{2T}\left(1 - \frac{1}{COP_h}\right) - 860 \times Pw \times T_2 - QH \times T_2}{\Delta T \times 1{,}000 \times \eta V} \quad \text{(ton)}$$

HQ_{2T} : Maximum heating load including load required for the day after the holiday (kcal/day)
ΔT : Temperature difference utilized by heat storage tank (deg°C)
ηV : Heat storage tank efficiency

HQ_{2T} : $1.3 \times (\Sigma Q'a + \Sigma Q'c + \Sigma Q'd + \Sigma Q'f)\ T2 - \psi(\Sigma Qe2 + \Sigma Qe3)\ (T2 - 1)$

$$V = \frac{HQ_{2T}\left(1 - \frac{1}{COP_h}\right) - 3{,}412 \times Pw \times T_2 - QH \times T_2}{\Delta T \times \eta V} \quad \text{(lbs)}$$

HQ_{2T} : Maximum heating load including load required for the day after the holiday (BTU/day)
ΔT : Temperature difference utilized by heat storage tank (deg°F)
ηV : Heat storage tank efficiency

HQ_{2T} : $1.3 \times (\Sigma Q'a + \Sigma Q'c + \Sigma Q'd + \Sigma Q'f)\ T2 - \psi(\Sigma Qe2 + \Sigma Qe3)\ (T2 - 1)$

When auxiliary heat source is operated after stopping of water heat source CITY MULTI unit

$$V = \frac{HQ_{2T}\left(1 - \frac{1}{COP_h}\right) - 860 \times Pw \times T_2}{\Delta T \times 1{,}000 \times \eta V} \quad \text{(ton)}$$

HQ_{2T} : Maximum heating load including load required for the day after the holiday (kcal/day)
ΔT : Temperature difference utilized by heat storage tank (deg°C)
ηV : Heat storage tank efficiency

HQ_{2T} : $1.3 \times (\Sigma Q'a + \Sigma Q'c + \Sigma Q'd + \Sigma Q'f)\ T2 - \psi(\Sigma Qe2 + \Sigma Qe3)\ (T2 - 1)$

$$V = \frac{HQ_{2T}\left(1 - \frac{1}{COP_h}\right) - 3{,}412 \times Pw \times T_2}{\Delta T \times \eta V} \quad \text{(lbs)}$$

HQ_{2T} : Maximum heating load including load required for the day after the holiday (BTU/day)
ΔT : Temperature difference utilized by heat storage tank (deg°F)
ηV : Heat storage tank efficiency

HQ_{2T} : $1.3 \times (\Sigma Q'a + \Sigma Q'c + \Sigma Q'd + \Sigma Q'f)\ T2 - \psi(\Sigma Qe2 + \Sigma Qe3)\ (T2 - 1)$

4) Piping system

The following items should be kept in your mind in planning / designing water circuits.

a) All units should be constituted in a single circuit in principle.

b) When plural numbers of the water heat source CITY MULTI unit are installed, the rated circulating water flow rate should be kept by making the piping resistance to each unit almost same value. As an example, the reverse return system as shown below may be employed.

c) Depending on the structure of a building, the water circuit may be prefabricated by making the layout uniform.

d) When a closed type piping circuit is constructed, install an expansion tank usable commonly for a make-up water tank to absorb the expansion/contraction of water caused by temperature fluctuation.

e) If the operating temperature range of circulation water stays within the temperature near the normal temperature (summer : 29.4°C[85°F], winter : 21.1°C[70°F]), thermal insulation or anti-sweating work is not required for the piping inside buildings.

In case of the conditions below, however, thermal insulation is required.

- When well water is used for heat source water.
- When piped to outdoor or a place where freezing may be caused.
- When vapor condensation may be generated on piping due to an increase in dry bulb temperature caused by the entry of fresh outdoor air.

System example of water circuit

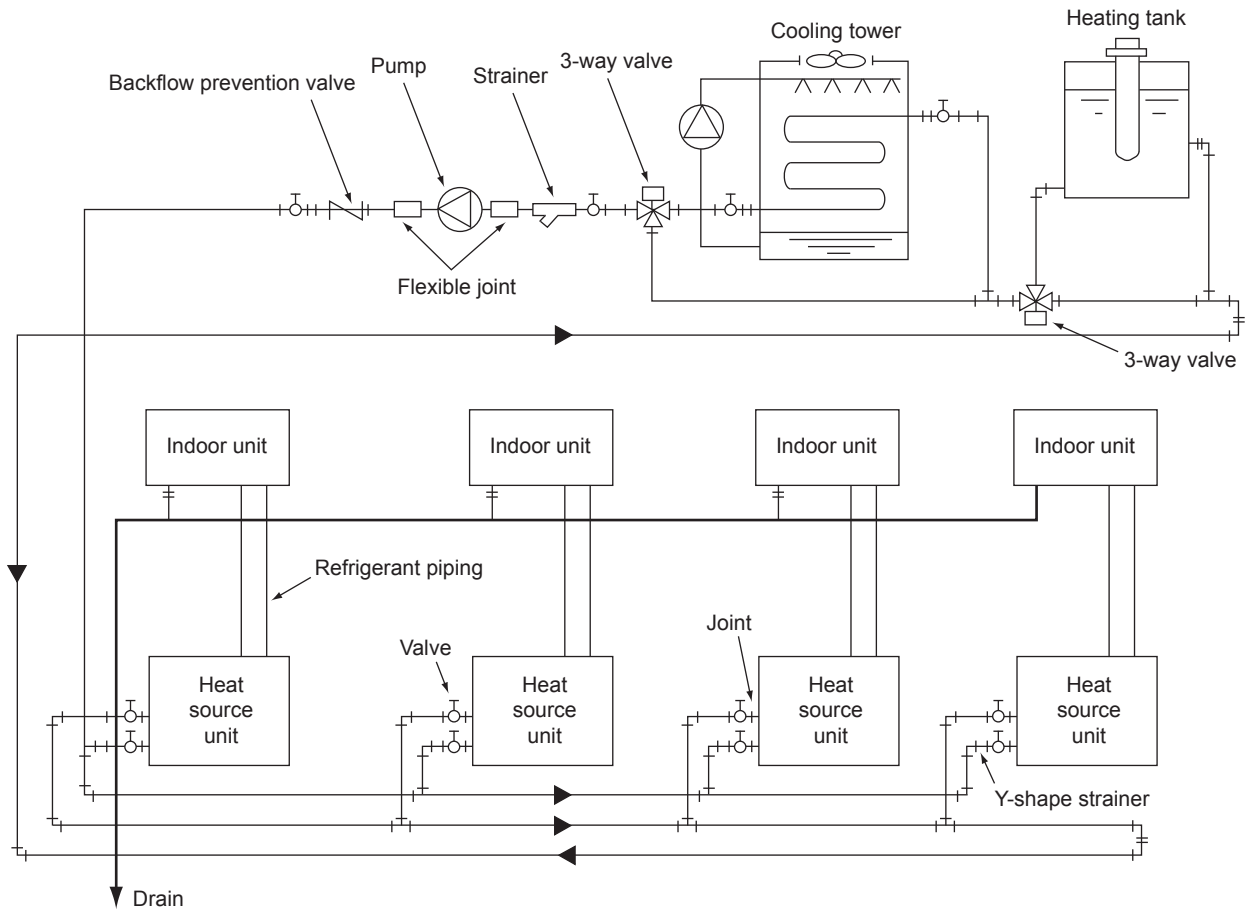

5) Practical System Examples and Circulation Water Control

Since the water heat source CITY MULTI is of water heat source system, versatile systems can be constituted by combining it with various heat sources.
The practical system examples are given below.
Either cooling or heating operation can be performed if the circulation water temperature of the water heat source CITY MULTI stays within a range of 10~45°C [50~113°F]. However, the circulation water temperature near 32°C[90°F] for cooling and 20°C[68°F] for heating is recommended by taking the life, power consumption and capacity of the air conditioning units into consideration. The detail of the control is also shown below.

Example-1 Combination of closed type cooling tower and hot water heat storage tank (using underground hollow slab)

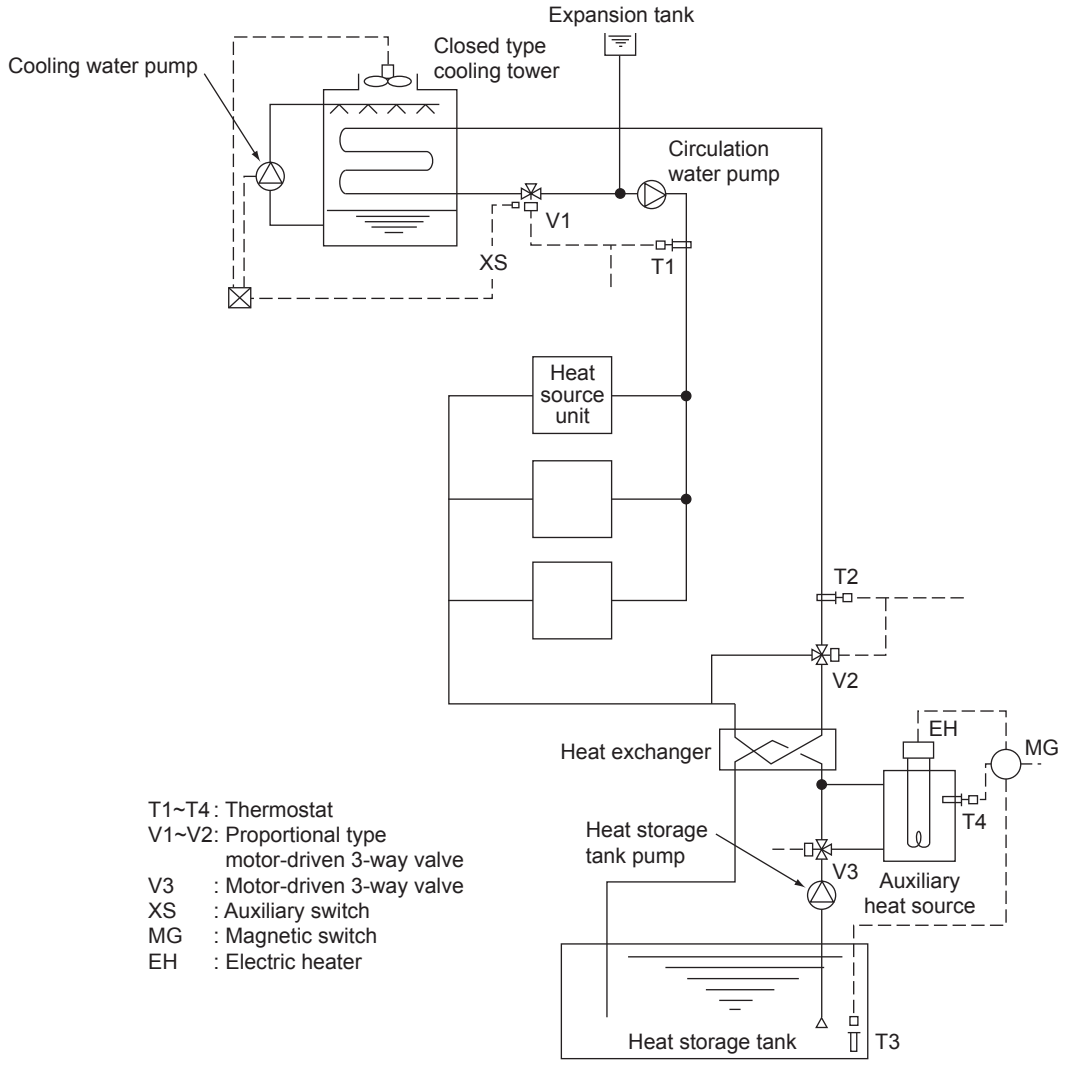

By detecting the circulation water temperature of the water heat source CITY MULTI system with T1 (around 32°C[90°F]) and T2 (around 20°C[68°F]), the temperature will be controlled by opening/closing V1 in the summer and V2 in the winter.
In the summer, as the circulation water temperature rises exceeding the set temperature of T1, the bypass port of V1 will open to lower the circulation water temperature. While in the winter, as the circulation water temperature drops, V2 will open following the command of T2 to rise the circulation water temperature.
The water inside the heat storage tank will be heated by the auxiliary heat source by V3 being opened with timer operation in the night-time. The electric heater of the auxiliary heat source will be controlled by T3 and the timer. The start/stop control of the fan and pump of the closed type cooling tower is applied with the step control of the fan and pump following the command of the auxiliary switch XS of V1, that operates only the fan at the light load while the fan and pump at the maximum load thus controlling water temperature and saving motor power.

Example-2 Combination of closed type cooling tower and hot water heat storage tank

T1 : Proportional type, insertion system thermostat
T2 : Proportional type, insertion system thermostat
T3 : Proportional type, insertion system thermostat
V1 : Proportional type, motor-driven 3-way valve
V2 : Proportional type, motor-driven 3-way valve
XS : Auxiliary switch (Duplex switch type)
SC : Step controller
R : Relay
MG : Magnetic

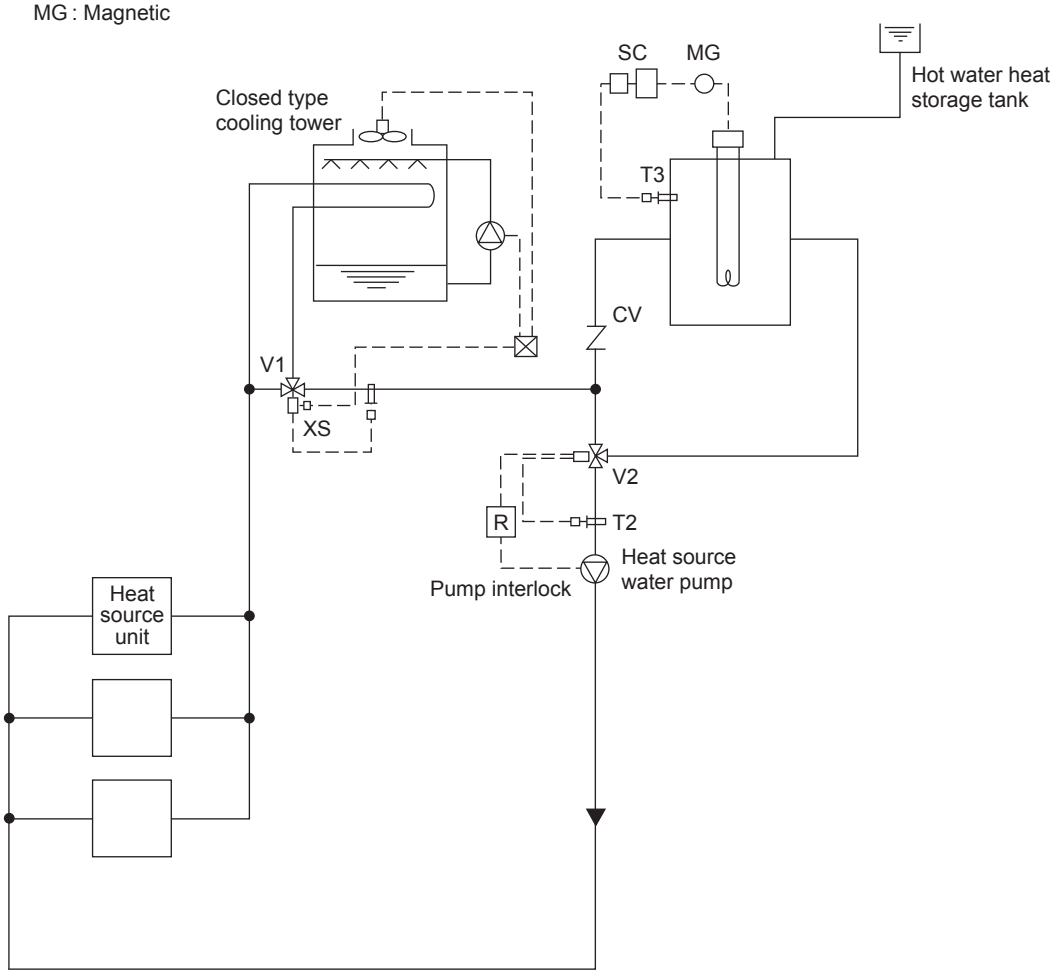

In the summer, as the circulation water temperature rises exceeding the set temperature of T1, the bypass port of V1 will open to lower the circulation water temperature. In the winter, if the circulation water temperature stays below 25°C[77°F], V2 will open/close by the command of T2 to keep the circulation water temperature constant.
The temperature of the hot water inside the heat storage tank will be controlled through the step control of the electric heater by step controller operation following the command of T3.
During the stopping of the heat source water pump, the bypass port of V2 will be closed fully by interlocking thus preventing the high temperature water from entering into the system at the starting of the pump.
The start/stop control of the fan and pump of the closed type cooling tower is applied with the step control of the fan and pump following the command of the auxiliary switch XS of V1, that operates only the fan at the light load while the fan and pump at the maximum load thus controlling water temperature and saving motor power.

Example-3 Combination of closed type cooling tower and boiler

T1 : Proportional type, insertion system thermostat
T2 : Proportional type, insertion system thermostat
T3 : Proportional type, insertion system thermostat
V1 : Proportional type, motor-driven 3-way valve
S : Selector switch
R : Relay
XS : Auxiliary switch (Duplex switch type)

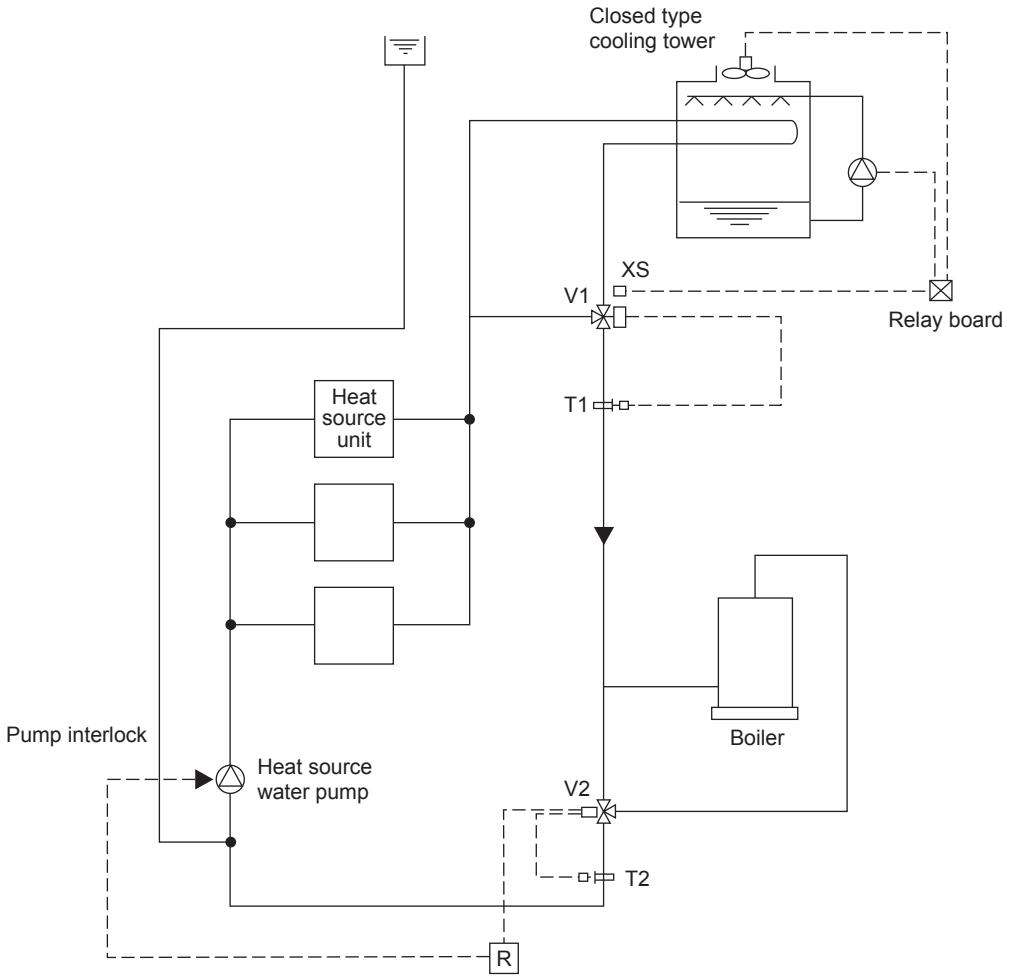

In the summer, as the circulation water temperature rises exceeding the set temperature of T1, the bypass port of V1 will close to lower the circulation water temperature. In the winter, if the circulation water temperature drops below 25°C[77°F], V2 will conduct water temperature control to keep the circulation water temperature constant.
During the stopping of the heat source water pump, the bypass port of V2 will be closed fully by interlocking.
The start/stop control of the fan and pump of the closed type cooling tower is applied with the step control following the command of the auxiliary switch XS of V1, thus controlling water temperature and saving motor power.

Example-4 Combination of closed type cooling tower and heat exchanger (of other heat source)

T1 : Proportional type, insertion system thermostat
T2 : Proportional type, insertion system thermostat
V1 : Proportional type, motor-driven 3-way valve
V2 : Proportional type, motor-driven 3-way valve
S : Selector switch
R : Relay
XS : Auxiliary switch (Duplex switch type)

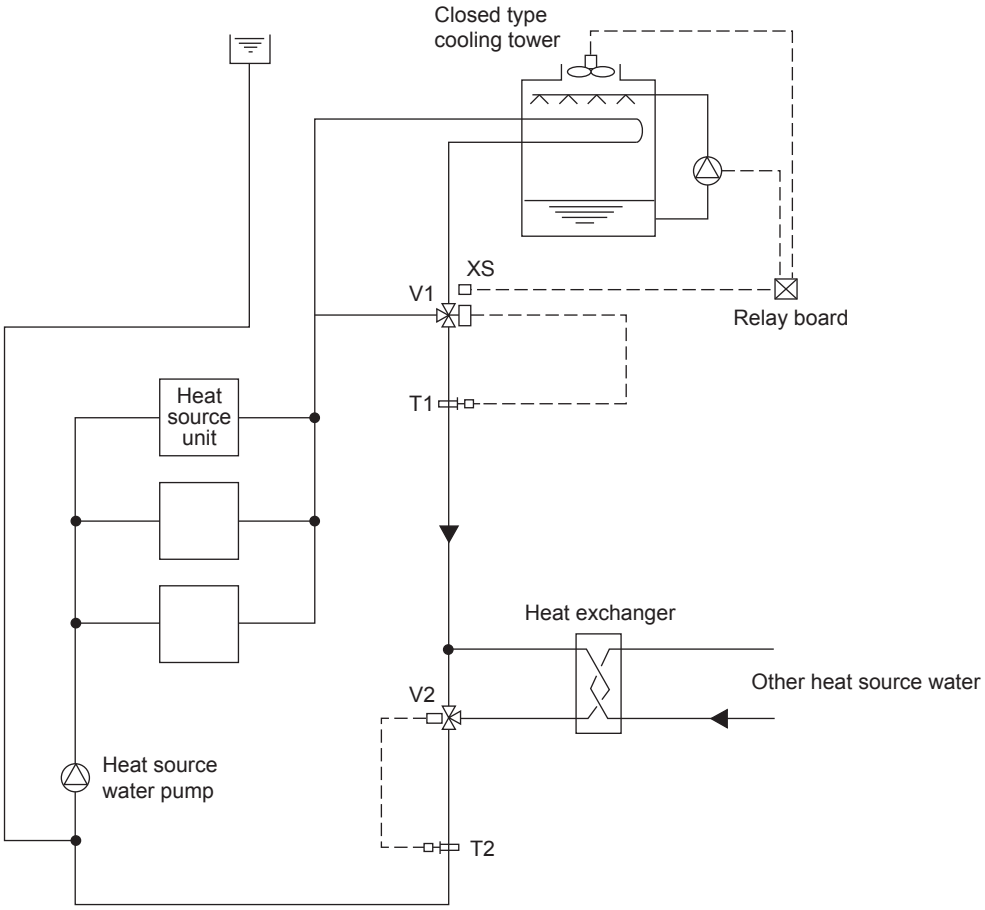

In the summer, as the circulation water temperature rises exceeding the set temperature of T1, the bypass port of V1 will close to lower the circulation water temperature. In the winter, if the circulation water temperature drops below 26°C[79°F], V2 will conduct water temperature control to keep the circulation water temperature constant.
During the stopping of the heat source water pump, the bypass port of V2 will be closed fully by interlocking.
The start/stop control of the fan and pump of the closed type cooling tower is applied with the step control following the command of the auxiliary switch XS of V1, thus controlling water temperature and saving motor power.

6) Pump interlock circuit

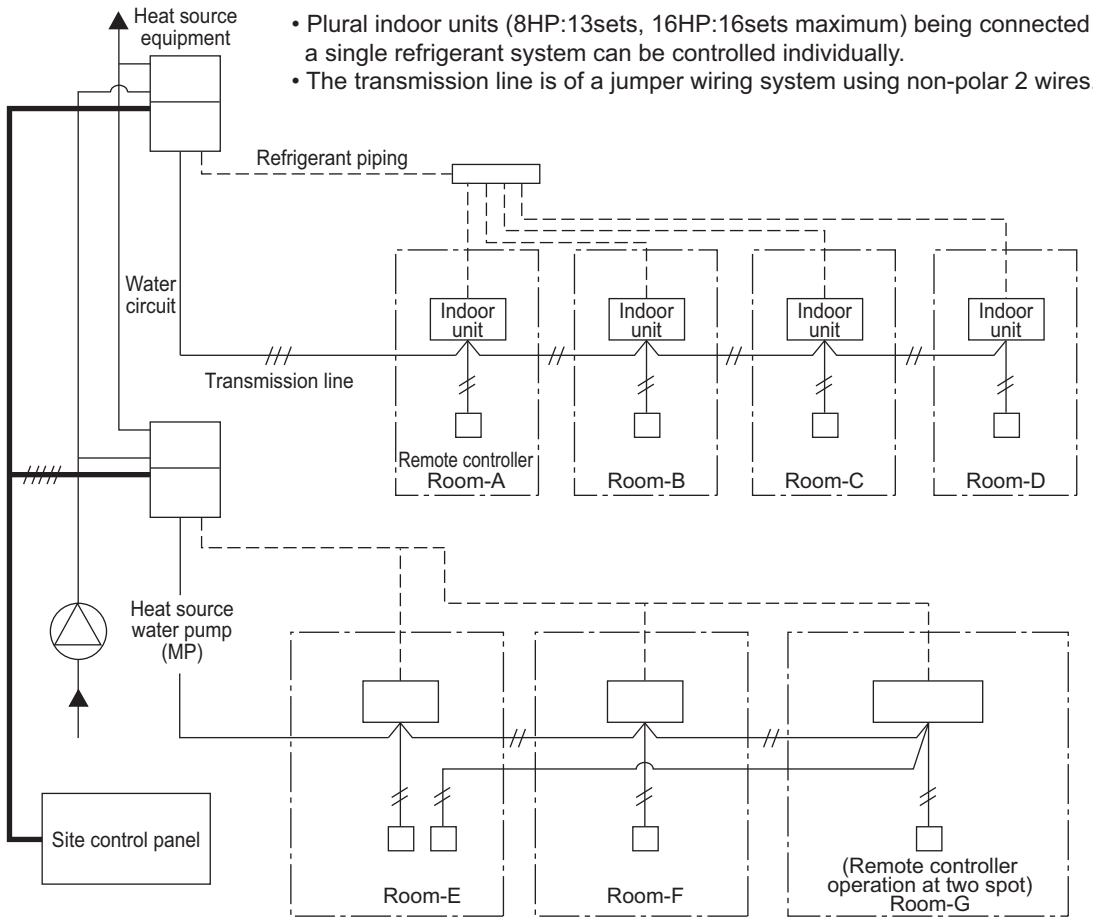

- Plural indoor units (8HP:13sets, 16HP:16sets maximum) being connected to a single refrigerant system can be controlled individually.
- The transmission line is of a jumper wiring system using non-polar 2 wires.

Wiring diagram

This circuit uses the "Terminal block for pump interlock (TB8)" inside the electrical parts box of the heat source equipment. This circuit is for interlocking of the heat source equipment operation and the heat source water pump.

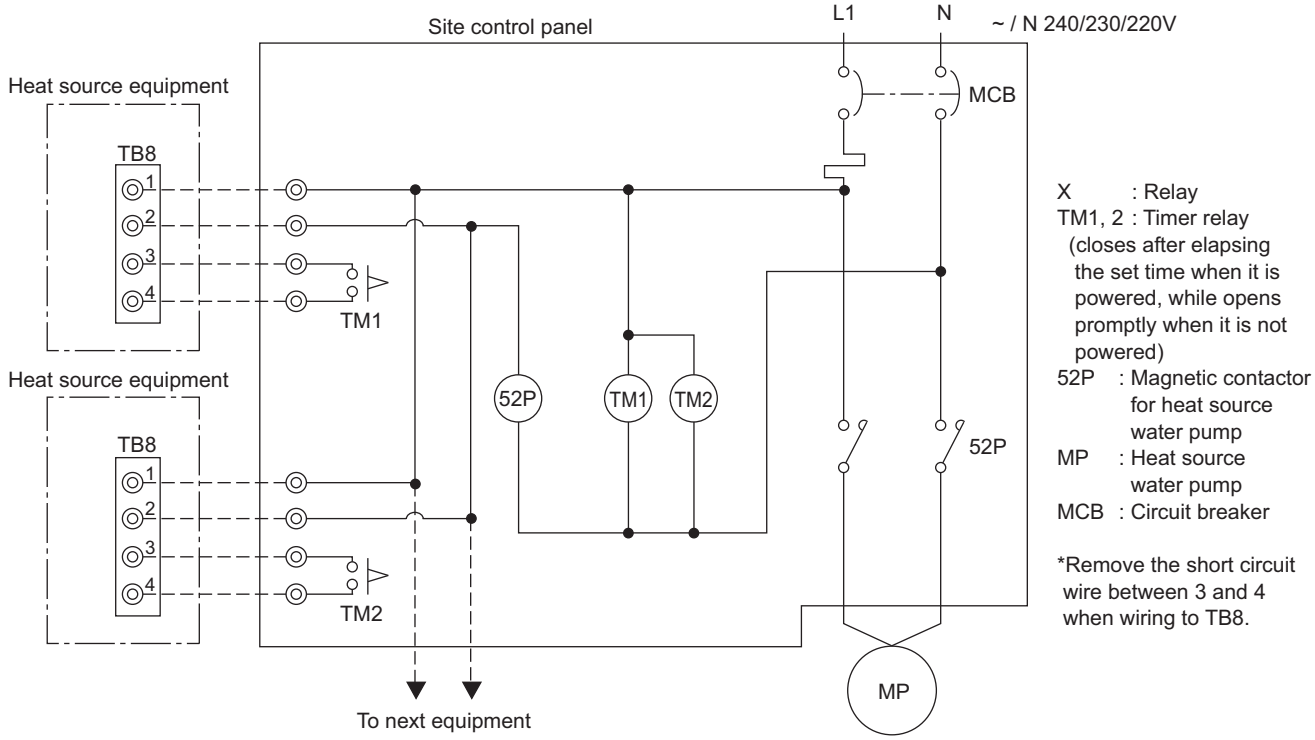

Operation ON signal

Terminal No.	TB8-1, 2
Output	Relay contacts output Rated voltage : L1 - N : 220 ~ 240V Rated load : 1A
Operation	• When Dip switch 2-7 is OFF The relay closes during compressor operation. • When DIP switch 2-7 is ON. The relay closes during reception of cooling or the heating operation signal from the controller. (Note : It is output even if the thermostat is OFF (when the compressor is stopped).)

Pump Interlock

Terminal No.	TB8-3, 4
Input	Level signal
Operation	If the circuit between TB8-3 and TB8-4 is open, compressor operation is prohibited.

8-2. Water piping work

Although the water piping for the CITY MULTI WY system does not differ from that for ordinary air conditioning systems, pay special attention to the items below in conducting the piping work.

1) Items to be observed on installation work

- In order to equalize piping resistance for each unit, adapt the reverse return system.
- Mount a joint and a valve onto the water outlet/inlet of the unit to allow for maintenance, inspection and replacement work. Be sure to mount a strainer at the water inlet piping of the unit. (The strainer is required at the circulation water inlet to protect the heat source unit.)

* The installation example of the heat source unit is shown right.

- Be sure to provide an air relief opening on the water piping properly, and purge air after feeding water to the piping system.
- Condensate will generate at the low temperature part inside the heat source equipment. Connect drain piping to the drain piping connection located at the bottom of the heat source equipment to discharge it outside the equipment.
- At the center of the header of the heat exchanger water inlet inside the unit, a plug for water discharge is being provided. Use it for maintenance work or the like.
- Mount a backflow prevention valve and a flexible joint for vibration control onto the pump.
- Provide a sleeve to the penetrating parts of the wall to prevent the piping.
- Fasten the piping with metal fitting, arrange the piping not to expose to cutting or bending force, and pay sufficient care for possible vibration.
- Be careful not to erroneously judge the position of the inlet and outlet of water.
  (Lower position : Inlet, Upper position : Outlet)
- When connecting heat source unit water piping and water piping on site, apply liquid sealing material for water piping over the sealing tape before connection. (for Maximum water pressure above 1.0MPa)
- Wrap the sealing tape as follows.

a) Wrap the joint with sealing tape in the direction of the threads (clockwise), and do not let the tape run over the edge.

b) Overlap the sealing tape by two-thirds to three-fourths of its width on each turn. Press the tape with your fingers so that it is pressed firmly against each thread.

c) Leave the 1.5th through 2nd farthest threads away from the pipe end unwrapped.

- Hold the pipe on the unit side in place with a spanner when installing the pipes or strainer. Tighten screws to a torque of 150N·m.

2) Thermal insulation work

Thermal insulation or anti sweating work is not required for the piping inside buildings in the case of the CITY MULTI WY system if the operating temperature range of circulation water stays within the temperature near the normal (summer : 29.4°C[85°F], winter : 21.1°C[70°F]).
In case of the conditions below, however, thermal insulation is required.

- Use of well water for heat source water
- Outdoor piping portions
- Indoor piping portions where freezing may be caused in winter
- A place where vapor condensation may be generated on piping due to an increase in dry bulb temperature inside the ceiling caused by the entry of fresh outdoor air
- Drain piping portions

Installation example of heat source unit

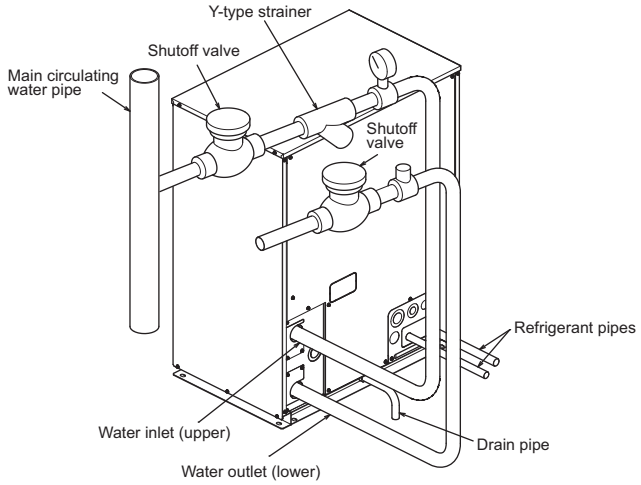

3) Water treatment and water quality control

For the circulation water cooling tower of the CITY MULTI WY system, employment of the closed type is recommended to keep water quality. However, in the case that an open type cooling tower is employed or the circulating water quality is inferior, scale will adhere onto the water heat exchanger leading to the decreased heat exchange capacity or the corrosion of the heat exchanger. Be sufficiently careful for water quality control and water treatment at the installation of the circulation water system.

- Removal of impurities inside piping
  Be careful not to allow impurities such as welding fragment, remaining sealing material and rust from mixing into the piping during installation work.
- Water treatment
  The water quality standards have been established by the industry (Japan Refrigeration, Air Conditioning Industry Association, in case of Japan) for water treatment to be applied.

Items		Lower mid-range temperature water system		Tendency	
		Recirculating water [20<T<60°C] [68<T<140°F]	Make-up water	Corrosive	Scale-forming
Standard items	pH (25°C[77°F])	7.0 ~ 8.0	7.0 ~ 8.0	○	○
	Electric conductivity (mS/m) (25°C[77°F]) (μS/cm) (25°C[77°F])	30 or less [300 or less]	30 or less [300 or less]	○	○
	Chloride ion (mg Cl^-/ℓ)	50 or less	50 or less	○	
	Sulfate ion (mg SO_4^{2-}/ℓ)	50 or less	50 or less	○	
	Acid consumption (pH4.8) (mg $CaCO_3$/ℓ)	50 or less	50 or less		○
	Total hardness (mg $CaCO_3$/ℓ)	70 or less	70 or less		○
	Calcium hardness (mg $CaCO_3$/ℓ)	50 or less	50 or less		○
	Ionic silica (mg SiO_2/ℓ)	30 or less	30 or less		○
Reference items	Iron (mg Fe/ℓ)	1.0 or less	0.3 or less	○	○
	Copper (mg Cu/ℓ)	1.0 or less	0.1 or less	○	
	Sulfide ion (mg S^{2-}/ℓ)	not to be detected	not to be detected	○	
	Ammonium ion (mg NH_4^+/ℓ)	0.3 or less	0.1 or less	○	
	Residual chlorine (mg Cl/ℓ)	0.25 or less	0.3 or less	○	
	Free carbon dioxide (mg CO_2/ℓ)	0.4 or less	4.0 or less	○	
	Ryzner stability index	–	–	○	○

Reference : Guideline of Water Quality for Refrigeration and Air Conditioning Equipment. (JRA GL02E-1994)

In order to keep the water quality within such standards, you are kindly requested to conduct bleeding-off by overflow and periodical water quality tests, and use inhibitors to suppress condensation or corrosion. Since piping may be corroded by some kinds of inhibitor, consult an appropriate water treatment expert for proper water treatment.

4) Pump interlock

Operating the heat source unit without circulation water inside the water piping can cause a trouble. Be sure to provide interlocking for the unit operation and water circuit. Since the terminal block is being provided inside the unit, use it as required.

9. Electrical work

9-1. General cautions

① Follow ordinance of your governmental organization for technical standard related to electrical equipment, wiring regulations, and guidance of each electric power company.
② Wiring for control (hereinafter referred to as transmission cable) shall be (50mm[1-5/8in.] or more) apart from power source wiring so that it is not influenced by electric noise from power source wiring. (Do not insert transmission cable and power source wire in the same conduit.)
③ Be sure to provide designated grounding work to Heat source unit.
④ Give some allowance to wiring for electrical part box of indoor and Heat source unit, because the box is sometimes removed at the time of service work.
⑤ Never connect 380~415V(220~240V) power source to terminal block of transmission cable. If connected,electrical parts will be burnt out.
⑥ Use 2-core shield cable for transmission cable. If transmission cables of different systems are wired with the same multiple-core cable, the resultant poor transmitting and receiving will cause erroneous operations.

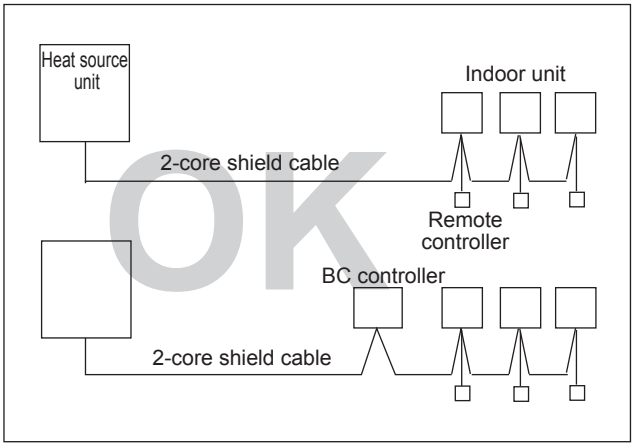

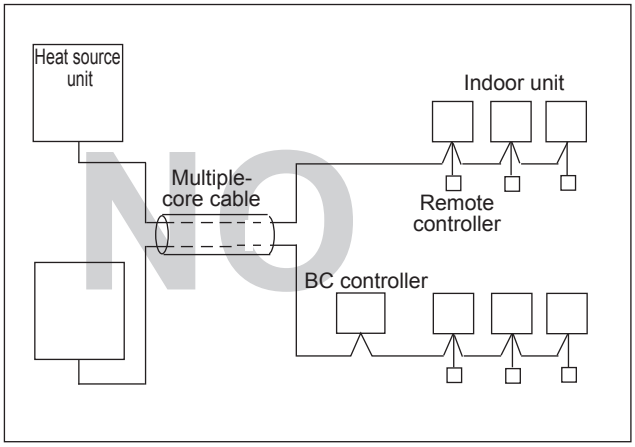

9-2. Power supply for Indoor unit and Heat source unit

9-2-1. Electrical characteristics of Indoor unit

Symbols: MCA : Min.Circuit Amps (=1.25xFLA) FLA : Full Load Amps
IFM :Indoor Fan Motor Output : Fan motor rated output

PMFY-P-VBM-E	Power supply			IFM	
	Volts / Hz	Range +-10%	MCA(A)	Output(kW)	FLA(A)
PMFY-P20VBM-E	220-240V / 50Hz 220V / 60Hz	Max.: 264V Min.: 198V	0.25	0.028	0.20
PMFY-P25VBM-E			0.26	0.028	0.21
PMFY-P32VBM-E			0.26	0.028	0.21
PMFY-P40VBM-E			0.33	0.028	0.26

PLFY-P-VCM-E	Power supply			IFM	
	Volts / Hz	Range +-10%	MCA(A)	Output(kW)	FLA(A)
PLFY-P20VCM-E	220-240V / 50Hz	Max.: 264V Min.: 198V	0.29	0.011	0.23
PLFY-P25VCM-E			0.29	0.015	0.23
PLFY-P32VCM-E			0.35	0.020	0.28
PLFY-P40VCM-E			0.35	0.020	0.28

PLFY-P-VBM-E	Power supply			IFM	
	Volts / Hz	Range +-10%	MCA(A)	Output(kW)	FLA(A)
PLFY-P32VBM-E	220-240V / 50Hz 220V / 60Hz	Max.: 264V Min.: 198V	0.28	0.050	0.22
PLFY-P40VBM-E			0.36	0.050	0.29
PLFY-P50VBM-E			0.36	0.050	0.29
PLFY-P63VBM-E			0.45	0.050	0.36
PLFY-P80VBM-E			0.64	0.050	0.51
PLFY-P100VBM-E			1.25	0.120	1.00
PLFY-P125VBM-E			1.34	0.120	1.07

PLFY-P-VLMD-E	Power supply			IFM	
	Volts / Hz	Range +-10%	MCA(A) (50 / 60Hz)	Output(kW)	FLA(A) (50 / 60Hz)
PLFY-P20VLMD-E	220-240V / 50Hz 220-230V / 60Hz	Max.: 264V Min.: 198V	0.45 / 0.46	0.015	0.36 / 0.37
PLFY-P25VLMD-E			0.45 / 0.46	0.015	0.36 / 0.37
PLFY-P32VLMD-E			0.45 / 0.46	0.015	0.36 / 0.37
PLFY-P40VLMD-E			0.50 / 0.53	0.015	0.40 / 0.42
PLFY-P50VLMD-E			0.51 / 0.54	0.020	0.41 / 0.43
PLFY-P63VLMD-E			0.61 / 0.64	0.020	0.49 / 0.51
PLFY-P80VLMD-E			0.90 / 0.93	0.020	0.72 / 0.74
PLFY-P100VLMD-E			0.94 / 1.10	0.030	0.75 / 0.88
PLFY-P125VLMD-E			1.69 / 1.69	0.078x2	1.35 / 1.35

PEFY-P-VMR-E-L/R	Power supply			IFM	
	Volts / Hz	Range +-10%	MCA(A) (50 / 60Hz)	Output(kW)	FLA(A) (50 / 60Hz)
PEFY-P20VMR-E-L/R	220-240V / 50Hz 220-230V / 60Hz	Max.: 264V Min.: 198V	0.37 / 0.37	0.018	0.29 / 0.29
PEFY-P25VMR-E-L/R			0.37 / 0.37	0.018	0.29 / 0.29
PEFY-P32VMR-E-L/R			0.43 / 0.48	0.023	0.34 / 0.38

PEFY-P-VMS1-E	Power supply			IFM	
	Volts / Hz	Range +-10%	MCA(A) (50 / 60Hz)	Output(kW)	FLA(A) (50 / 60Hz)
PEFY-P15VMS1-E	220-240V / 50Hz 220-240V / 60Hz	Max.: 264V Min.: 198V	0.63 / 0.63	0.096	0.50 / 0.50
PEFY-P20VMS1-E			0.70 / 0.70	0.096	0.56 / 0.56
PEFY-P25VMS1-E			0.75 / 0.75	0.096	0.60 / 0.60
PEFY-P32VMS1-E			0.75 / 0.75	0.096	0.60 / 0.60
PEFY-P40VMS1-E			0.83 / 0.82	0.096	0.66 / 0.65
PEFY-P50VMS1-E			1.02 / 1.00	0.096	0.81 / 0.80
PEFY-P63VMS1-E			1.08 / 1.07	0.096	0.86 / 0.85

Symbols: MCA : Min.Circuit Amps (=1.25xFLA) FLA : Full Load Amps
IFM :Indoor Fan Motor Output : Fan motor rated output

PEFY-P-VMS1L-E	Power supply			IFM	
	Volts / Hz	Range +-10%	MCA(A) (50 / 60Hz)	Output(kW)	FLA(A) (50 / 60Hz)
PEFY-P15VMS1L-E	220-240V / 50Hz 220-240V / 60Hz	Max.: 264V Min.: 198V	0.46 / 0.46	0.096	0.37 / 0.37
PEFY-P20VMS1L-E			0.54 / 0.54	0.096	0.43 / 0.43
PEFY-P25VMS1L-E			0.59 / 0.59	0.096	0.47 / 0.47
PEFY-P32VMS1L-E			0.59 / 0.59	0.096	0.47 / 0.47
PEFY-P40VMS1L-E			0.68 / 0.68	0.096	0.54 / 0.54
PEFY-P50VMS1L-E			0.84 / 0.84	0.096	0.67 / 0.67
PEFY-P63VMS1L-E			0.91 / 0.91	0.096	0.73 / 0.73

PEFY-P-VMH-E	Power supply			IFM	
	Volts / Hz	Range +-10%	MCA(A) (50 / 60Hz)	Output(kW)	FLA(A) (50 / 60Hz)
PEFY-P40VMH-E	220-240V / 50Hz 220-240V / 60Hz	Max.: 264V Min.: 198V	1.21 / 1.61	0.08	0.97 / 1.29
PEFY-P50VMH-E			1.21 / 1.61	0.08	0.97 / 1.29
PEFY-P63VMH-E			1.49 / 1.95	0.12	1.19 / 1.56
PEFY-P71VMH-E			1.58 / 2.18	0.14	1.26 / 1.74
PEFY-P80VMH-E			1.85 / 2.40	0.18	1.48 / 1.92
PEFY-P100VMH-E			3.03 / 3.93	0.26	2.42 / 3.14
PEFY-P125VMH-E			3.03 / 3.93	0.26	2.42 / 3.14
PEFY-P140VMH-E			3.10 / 3.98	0.26	2.48 / 3.18
PEFY-P200VMH-E	380-415V / 50Hz 380-415V / 60Hz	Max.: 456V Min.: 342V	2.03 / 2.33	0.76	1.62 / 1.86
PEFY-P250VMH-E			2.50 / 2.88	1.08	2.00 / 2.30

PEFY-P-VMA-E	Power supply			IFM	
	Volts / Hz	Range +-10%	MCA(A)	Output(kW)	FLA(A)
PEFY-P20VMA-E	220-240V / 50Hz 220-240V / 60Hz	Max.: 264V Min.: 198V	1.03	0.085	0.82
PEFY-P25VMA-E			1.03	0.085	0.82
PEFY-P32VMA-E			1.18	0.085	0.95
PEFY-P40VMA-E			1.43	0.085	1.14
PEFY-P50VMA-E			1.54	0.085	1.23
PEFY-P63VMA-E			2.22	0.121	1.78
PEFY-P71VMA-E			2.46	0.121	1.97
PEFY-P80VMA-E			2.47	0.121	1.98
PEFY-P100VMA-E			3.30	0.244	2.64
PEFY-P125VMA-E			3.39	0.244	2.71
PEFY-P140VMA-E			3.29	0.244	2.63

PEFY-P-VMAL-E	Power supply			IFM	
	Volts / Hz	Range +-10%	MCA(A)	Output(kW)	FLA(A)
PEFY-P20VMAL-E	220-240V / 50Hz 220-240V / 60Hz	Max.: 264V Min.: 198V	0.92	0.085	0.74
PEFY-P25VMAL-E			0.92	0.085	0.74
PEFY-P32VMAL-E			1.07	0.085	0.86
PEFY-P40VMAL-E			1.32	0.085	1.06
PEFY-P50VMAL-E			1.40	0.085	1.12
PEFY-P63VMAL-E			2.08	0.121	1.67
PEFY-P71VMAL-E			2.32	0.121	1.86
PEFY-P80VMAL-E			2.36	0.121	1.89
PEFY-P100VMAL-E			3.19	0.244	2.55
PEFY-P125VMAL-E			3.27	0.244	2.62
PEFY-P140VMAL-E			3.17	0.244	2.53

PEFY-P-VMH-E-F	Power supply			IFM	
	Volts / Hz	Range +-10%	MCA(A) (50 / 60Hz)	Output(kW)	FLA(A) (50 / 60Hz)
PEFY-P80VMH-E-F	220-240V / 50Hz 208-230V / 60Hz	Max.: 264V Min.: 187V	0.92 / 1.15	0.09	0.73 / 0.92
PEFY-P140VMH-E-F			1.58 / 1.84	0.14	1.26 / 1.47
PEFY-P200VMH-E-F	380-415V / 50Hz 380-415V / 60Hz	Max.: 456V Min.: 342V	0.73 / 0.93	0.20	0.58 / 0.74
PEFY-P250VMH-E-F			0.85 / 1.08	0.23	0.68 / 0.86

Symbols: MCA : Min.Circuit Amps (=1.25xFLA) FLA : Full Load Amps
IFM :Indoor Fan Motor Output : Fan motor rated output

PDFY-P-VM-E	Power supply			IFM	
	Volts / Hz	Range +-10%	MCA(A) (50 / 60Hz)	Output(kW)	FLA(A) (50 / 60Hz)
PDFY-P20VM-E	220-240V / 50Hz 220V / 60Hz	Max.: 264V Min.: 198V	0.66 / 0.73	0.075	0.53 / 0.58
PDFY-P25VM-E			0.66 / 0.73	0.075	0.53 / 0.58
PDFY-P32VM-E			0.66 / 0.73	0.075	0.53 / 0.58
PDFY-P40VM-E			0.75 / 0.89	0.075	0.60 / 0.71
PDFY-P50VM-E			0.75 / 0.89	0.075	0.60 / 0.71
PDFY-P63VM-E			0.85 / 1.03	0.078	0.68 / 0.82
PDFY-P71VM-E			0.90 / 1.10	0.078	0.72 / 0.88
PDFY-P80VM-E			1.03 / 1.26	0.078	0.82 / 1.01
PDFY-P100VM-E			1.60-1.68 / 1.70	0.140	1.28-1.34 / 1.36
PDFY-P125VM-E			1.94-2.04 / 2.30	0.190	1.55-1.63 / 1.84

PKFY-P-VBM-E	Power supply			IFM	
	Volts / Hz	Range +-10%	MCA(A)	Output(kW)	FLA(A)
PKFY-P15VBM-E	220-240V / 50Hz 220V / 60Hz	Max.: 264V Min.: 198V	0.25	0.017	0.20
PKFY-P20VBM-E			0.25	0.017	0.20
PKFY-P25VBM-E			0.25	0.017	0.20

PKFY-P-VHM-E	Power supply			IFM	
	Volts / Hz	Range +-10%	MCA(A)	Output(kW)	FLA(A)
PKFY-P32VHM-E	220-240V / 50Hz 220V / 60Hz	Max.: 264V Min.: 198V	0.38	0.030	0.30
PKFY-P40VHM-E			0.38	0.030	0.30
PKFY-P50VHM-E			0.38	0.030	0.30

PKFY-P-VKM-E	Power supply			IFM	
	Volts / Hz	Range +-10%	MCA(A)	Output(kW)	FLA(A)
PKFY-P63VKM-E	220-240V / 50Hz 220V / 60Hz	Max.: 264V Min.: 198V	0.36	0.056	0.29
PKFY-P100VKM-E			0.63	0.056	0.50

PCFY-P-VKM-E	Power supply			IFM	
	Volts / Hz	Range +-10%	MCA(A)	Output(kW)	FLA(A)
PCFY-P40VKM-E	220-240V / 50Hz 220V / 60Hz	Max.: 264V Min.: 198V	0.35	0.090	0.28
PCFY-P63VKM-E			0.41	0.095	0.33
PCFY-P100VKM-E			0.81	0.160	0.65
PCFY-P125VKM-E			0.95	0.160	0.76

PFFY-P-VKM-E	Power supply			IFM	
	Volts / Hz	Range +-10%	MCA(A)	Output(kW)	FLA(A)
PFFY-P20VKM-E	220-240V / 50Hz	Max.: 264V Min.: 198V	0.25	0.03x2	0.20
PFFY-P25VKM-E			0.25	0.03x2	0.20
PFFY-P32VKM-E			0.25	0.03x2	0.20
PFFY-P40VKM-E			0.30	0.03x2	0.24

PFFY-P-VLEM-E	Power supply			IFM	
	Volts / Hz	Range +-10%	MCA(A) (50 / 60Hz)	Output(kW)	FLA(A) (50 / 60Hz)
PFFY-P20VLEM-E	220-240V / 50Hz 208-230V / 60Hz	Max.: 264V Min.: 187V	0.24 / 0.31	0.015	0.19 / 0.25
PFFY-P25VLEM-E			0.24 / 0.31	0.015	0.19 / 0.25
PFFY-P32VLEM-E			0.36 / 0.38	0.018	0.29 / 0.30
PFFY-P40VLEM-E			0.40 / 0.41	0.030	0.32 / 0.33
PFFY-P50VLEM-E			0.50 / 0.51	0.035	0.40 / 0.41
PFFY-P63VLEM-E			0.58 / 0.59	0.050	0.46 / 0.47

Symbols: MCA : Min.Circuit Amps (=1.25xFLA) FLA : Full Load Amps
IFM :Indoor Fan Motor Output : Fan motor rated output

PFFY-P-VLRM-E	Power supply			IFM	
	Volts / Hz	Range +-10%	MCA(A) (50 / 60Hz)	Output(kW)	FLA(A) (50 / 60Hz)
PFFY-P20VLRM-E	220-240V / 50Hz 208-230V / 60Hz	Max.: 264V Min.: 187V	0.24 / 0.31	0.015	0.19 / 0.25
PFFY-P25VLRM-E			0.24 / 0.31	0.015	0.19 / 0.25
PFFY-P32VLRM-E			0.36 / 0.38	0.018	0.29 / 0.30
PFFY-P40VLRM-E			0.40 / 0.41	0.030	0.32 / 0.33
PFFY-P50VLRM-E			0.50 / 0.51	0.035	0.40 / 0.41
PFFY-P63VLRM-E			0.58 / 0.59	0.050	0.46 / 0.47

PFFY-P-VLRMM-E	Power supply			IFM	
	Volts / Hz	Range +-10%	MCA(A) (50 / 60Hz)	Output(kW)	FLA(A) (50 / 60Hz)
PFFY-P20VLRMM-E	220-240V / 50Hz	Max.: 264V Min.: 198V	0.59 / 0.58	0.096	0.47 / 0.46
PFFY-P25VLRMM-E			0.59 / 0.58	0.096	0.47 / 0.46
PFFY-P32VLRMM-E			0.69 / 0.69	0.096	0.55 / 0.55
PFFY-P40VLRMM-E			0.78 / 0.76	0.096	0.62 / 0.61
PFFY-P50VLRMM-E			0.80 / 0.79	0.096	0.64 / 0.63
PFFY-P63VLRMM-E			0.93 / 0.93	0.096	0.74 / 0.74

GUF-RDH3	Power supply			IFM	
	Volts / Hz	Range +-10%	MCA(A) (50 / 60Hz)	Output(kW)	FLA(A) (50 / 60Hz)
GUF-50RD(H)3	220-240V / 50Hz 220V / 60Hz	Max.: 264V Min.: 198V	1.85 / 1.85	0.081x2	1.48 / 1.48
GUF-100RD(H)3			3.49 / 3.49	0.16x2	2.79 / 2.79

9-2-2. Electrical characteristics of Heat source unit at cooling mode

PQHY-P-YHM	Unit combination	Outdoor units				Compressor		RLA(A)	
		Hz	Volts	Voltage range	MCA(A)	Out-put(kw)	SC(A)	cooling	heating
PQHY-P200YHM-A(-BS)	-	50/60	380 400 415	Max:456 Min:342	16.01	4.6	8	6.6/6.2/6.0	6.9/6.6/6.3
PQHY-P250YHM-A(-BS)	-				17.20	6.3		9.2/8.7/8.4	9.7/9.3/8.9
PQHY-P300YHM-A(-BS)	-				19.13	7.4		12.4/11.8/11.3	13.7/13.0/12.5
PQHY-P400YSHM-A(-BS)	PQHY-P200YHM-A(-BS)				33.96	4.6		13.9/13.2/12.7	14.6/13.8/13.3
	PQHY-P200YHM-A(-BS)					4.6			
PQHY-P450YSHM-A(-BS)	PQHY-P200YHM-A(-BS)				35.54	4.6		16.6/15.7/15.2	17.5/16.7/16.1
	PQHY-P250YHM-A(-BS)					6.3			
PQHY-P500YSHM-A(-BS)	PQHY-P250YHM-A(-BS)				36.06	6.3		19.3/18.3/17.6	20.3/19.3/18.6
	PQHY-P250YHM-A(-BS)					6.3			
PQHY-P550YSHM-A(-BS)	PQHY-P250YHM-A(-BS)				39.20	6.3		22.7/21.5/20.8	24.7/23.4/22.6
	PQHY-P300YHM-A(-BS)					7.4			
PQHY-P600YSHM-A(-BS)	PQHY-P300YHM-A(-BS)				40.24	7.4		26.1/24.8/23.9	28.9/27.4/26.4
	PQHY-P300YHM-A(-BS)					7.4			
PQHY-P650YSHM-A(-BS)	PQHY-P250YHM-A(-BS)				52.69	6.3		23.5/22.3/21.5	24.8/23.6/22.7
	PQHY-P200YHM-A(-BS)					4.6			
	PQHY-P200YHM-A(-BS)					4.6			
PQHY-P700YSHM-A(-BS)	PQHY-P250YHM-A(-BS)				53.40	6.3		26.3/24.9/24.0	27.8/26.4/25.5
	PQHY-P250YHM-A(-BS)					6.3			
	PQHY-P200YHM-A(-BS)					4.6			
PQHY-P750YSHM-A(-BS)	PQHY-P250YHM-A(-BS)				54.10	6.3		29.0/27.5/26.5	30.8/29.3/28.2
	PQHY-P250YHM-A(-BS)					6.3			
	PQHY-P250YHM-A(-BS)					6.3			
PQHY-P800YSHM-A(-BS)	PQHY-P300YHM-A(-BS)				57.58	7.4		32.3/30.7/29.6	35.0/33.2/32.0
	PQHY-P250YHM-A(-BS)					6.3			
	PQHY-P250YHM-A(-BS)					6.3			
PQHY-P850YSHM-A(-BS)	PQHY-P300YHM-A(-BS)				58.97	7.4		35.7/33.9/32.7	39.1/37.2/35.8
	PQHY-P300YHM-A(-BS)					7.4			
	PQHY-P250YHM-A(-BS)					6.3			
PQHY-P900YSHM-A(-BS)	PQHY-P300YHM-A(-BS)				60.36	7.4		39.1/37.2/35.8	43.3/41.1/39.6
	PQHY-P300YHM-A(-BS)					7.4			
	PQHY-P300YHM-A(-BS)					7.4			

9-3. Power cable specifications

Thickness of wire for main power supply, capacities of the switch and system impedance

	Model	Minimum wire thickness (mm^2)			Breaker for current leakage	Local swtich (A)		Breaker for wiring (NFB) (A)	Max..Permissive System Impedance
		Main cable	Branch	Ground		Capacity	Fuse		
Heat source unit	PQHY-P200YHM-A(-BS)	4.0	-	4.0	30A 100mA 0.1sec. or less	25	25	30	(apply to EN61000-3-3)
	PQHY-P250YHM-A(-BS)	4.0	-	4.0	30A 100mA 0.1sec. or less	25	25	30	(apply to EN61000-3-3)
	PQHY-P300YHM-A(-BS)	4.0	-	4.0	30A 100mA 0.1sec. or less	25	25	30	(apply to EN61000-3-3)
Total operating current of the indoor unit	16A or less	1.5	1.5	1.5	20A 30mA 0.1sec. or less	16	16	20	(apply to EN61000-3-3)
	25A or less	2.5	2.5	2.5	30A 30mA 0.1sec. or less	25	25	30	(apply to EN61000-3-3)
	32A or less	4.0	4.0	4.0	40A 30mA 0.1sec. or less	32	32	40	(apply to EN61000-3-3)

*1: Meet technical requirements of IEC61000-3-3

1. Use dedicated power supplies for the outdoor unit and indoor unit. Ensure OC and OS are wired individually.
2. Bear in mind ambient conditions (ambient temperature,direct sunlight, rain water,etc.) when proceeding with the wiring and connections.
3. The wire size is the minimum value for metal conduit wiring. If the voltage drops, use a wire that is one rank thicker in diameter. Make sure the power-supply voltage does not drop more than 10%.
4. Specific wiring requirements should adhere to the wiring regulations of the region.
5. Power supply cords of parts of appliances for outdoor use shall not be lighter than polychloroprene sheathed flexible cord (design 245 IEC57). For example, use wiring such as YZW.
6. A switch with at least 3 mm contact separation in each pole shall be provided by the Air Conditioner installer.

⚠WARNING

- Be sure to use specified wires for connections and ensure no external force is imparted to terminal connections. If connections are not fixed firmly, heating or fire may result.
- Be sure to use the appropriate type of overcurrent protection switch. Note that generated overcurrent may include some amount of direct current.

⚠CAUTION

- Some installation sites may require attachment of an earth leakage breaker for the inverter. If no earth leakage breaker is installed, there is a danger of electric shock.
- Do not use anything other than a breaker and fuse with the correct capacity. Using a fuse or wire of too large capacity may cause malfunction or fire.

Note

- This device is intended for the connection to a power supply system with a maximum permissible system impedance shown in the above table at the interface point (power service box) of the user's supply.
- The user must ensure that this device is connected only to a power supply system which fulfils the requirement above.
  If necessary, the user can ask the public power supply company for the system impedance at the interface point.
- This equipment complies with IEC 61000-3-12 provided that the short-circuit power Ssc is greater than or equal to Ssc(*2) at the interface point between the user's supply and the public system. It is the responsibility of the installer or user of the equipment to ensure, by consultation with the distribution network operator if necessary, that the equipment is connected only to a supply with a short-circuit power Ssc greater than or equal to Ssc(*2).

Ssc(*2)

Model	Ssc(MVA)
PQHY-P200YHM	1.24
PQHY-P250YHM	1.34
PQHY-P300YHM	1.49

9-4. Power supply examples

The local standards and/or regulations is applicable at a higher priority.

9-4-1. PQHY-P650-900YSHM

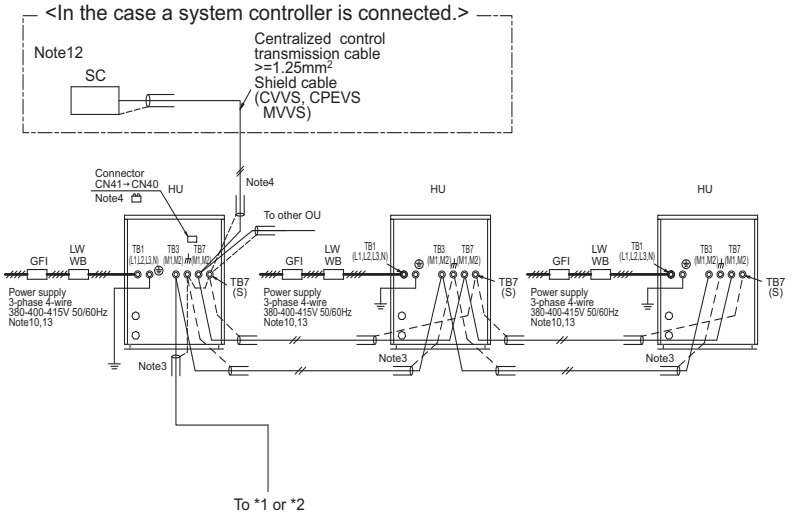

Note:
1 The transmission cable is not-polarity double-wire.
2 Symbol ◎ means a screw terminal for wiring.
3 The shield wire of transmission cable should be connected to the grounding terminal at Heat source unit. All shield wire of M-Net transmission cable among Indoor units should be connected to the S terminal at Indoor unit or all shield wire should be connected together.
The broken line at the scheme means shield wire.
4 When the Heat source unit connected with system controller, power-supply to TB7 of the heat source unit(s) is needed. The connector change from CN41 to CN40 at one of the heat source units will enable the heat source unit to supply power to TB7, or an extra power supplying unit PAC-SC51KUA should be used. The transmission cable (above 1.25mm^2, shielded, CVVS/CPEVS/MVVS) among Heat source units and system controllers is called centralized control transmission cable. The shield wire of the centralized control transmission cable must be grounded at the Heat source unit whose CN41 is changed to CN40.
5 MA R/C transmission cable (0.3-1.25mm^2) must be less than 200m in length, while ME R/C transmission cable (0.3-1.25mm^2) must be less than 10m in length. But transmission cable to the ME R/C can be extend using a M-NET cable (>=1.25mm^2) when the length is counted in the M-Net length. Both Compact MA and ME R/C transmission cables size 0.75~1.25mm^2 in thickness.
6 MA remote controller and ME remote controller should not be grouped together.
7 If using 1 or 2 (main/sub) MA remote controller to control more than 1 Indoor unit, use MA transmission cable to connect all the TB15 terminals of the Indoor units. It is called "Grouping".
If using 1 or 2 (main/sub) ME remote controller control more than 1 indoor unit, set address to Indoor unit and ME remote controller. For the method, refer to 2-4. "Address Setting".
8 Indoor board consumes power from TB3. The power balance should be considered according to System Design 2-3 "System configuration restrictions".
9 If Transmission booster is needed, be sure to connect the shield wires to the both sides to the booster.
10 The critical current for choosing power source equipment is approximate 1.4 times of total rated current of the Heat source unit(s) or Indoor unit(s).
11 Numbers shown with ( ) indicates a diameter of the compact remote controller.
12 When System controller (SC) is connected to the system, turn the SW2-1 on.
13. The phases of electricity power must be confirmed to be right used. Phase-reverse, or phase-missing could break the controllers.

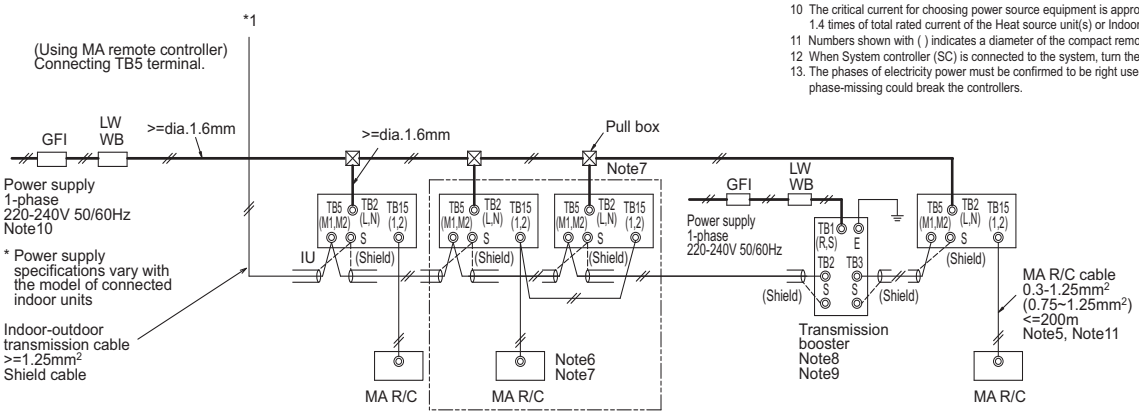

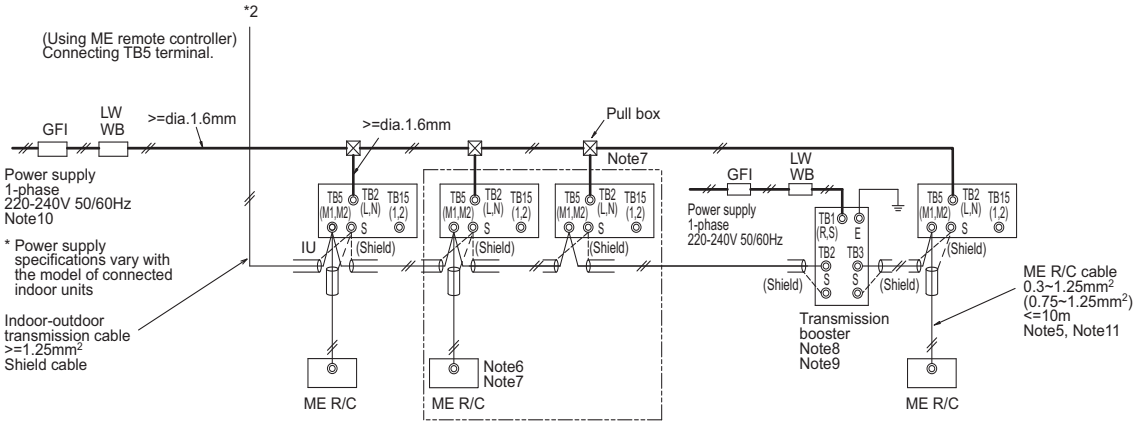

Symbol		Model	Ground-fault interrupter *1, *2	Local switch BC <A>	Local switch OCP*3 <A>	Wiring breaker (NFB) <A>	Minimum Wire thickness Power wire <mm2>	Minimum Wire thickness Earth wire <mm2>
GFI	Ground-fault interrupter	PQHY-P200YHM	30A 100mA 0.1sec. or less	25	25	30	4	4
LW	Local switch	PQHY-P250YHM	30A 100mA 0.1sec. or less	25	25	30	4	4
BC	Breaker capacity	PQHY-P300YHM	30A 100mA 0.1sec. or less	25	25	30	4	4
OCP	Over-current protector							
WB	Wiring breaker							
NFB	Non-fuse breaker							
HU	Heat source unit							
IU	Indoor unit							
SC	System controller							
MA R/C	MA remote controller							
ME R/C	ME remote controller							

*1 The Ground-fault interrupter should support Inverter circuit. (e.g. Mitsubishi Electric's NV-C series or equivalent).
*2 Ground-fault interrupter should combine using of local switch or wiring breaker.
*3 It shows data for B-type fuse of the breaker for current leakage.

10-1. Transmission cable length limitation

10-1-1. Using MA Remote controller(PQHY-P-YHM)

Long transmission cable causes voltage down, therefore, the length limitation should be obeyed to secure proper transmission.

Max. length via Heat source (M-NET cable)	L1+L2+L3+L4, L1+L2+L6+L7, L3+L4+L6+L7	<=500m[1640ft.]	1.25mm^2 [AWG16] or thicker
Max. length to Heat source (M-NET cable)	L1+L8, L3+L4, L6, L2+L6+L8, L7	<=200m[656ft.]	1.25mm^2 [AWG16] or thicker
Max. length from MA to Indoor	a1+a2, a1+a2+a3+a4	<=200m[656ft.]	0.3-1.25 mm^2 [AWG22-16]
24VDC to AG-150A	n	<=50m[164ft.]	0.75-2.0 mm^2 [AWG18-14]

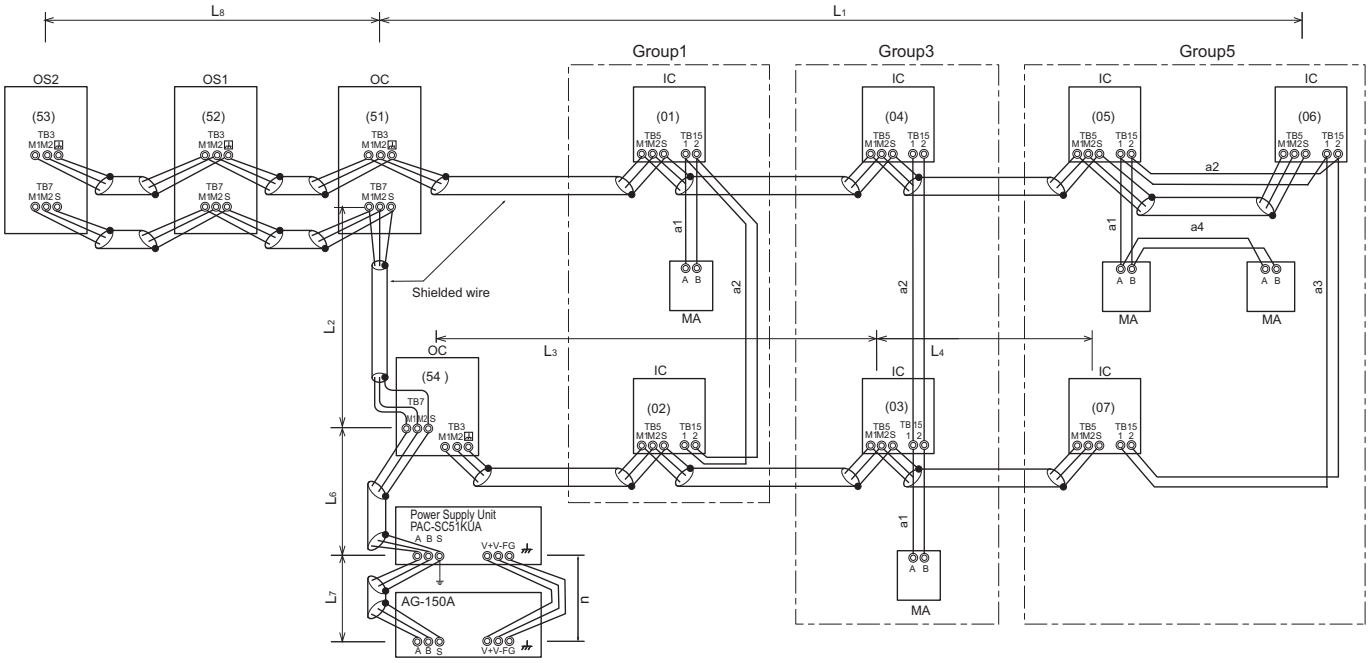

OC, OS1, OS2 : Heat source unit controller; IC: Indoor unit controller; MA: MA remote controller

10-1-2. Using ME Remote controller(PQHY-P-YHM)

Long transmission cable causes voltage down, therefore, the length limitation should be obeyed to secure proper transmission.

Max. length via Heat source (M-NET cable)	L1+L2+L3+L4, L1+L2+L6+L7,L1+L2+L3+L5, L3+L4+L6+L7	<=500m[1640ft.]	1.25mm^2 [AWG16] or thicker
Max. length to Heat source (M-NET cable)	L1+L8, L3+L4, L6, L2+L6+L8, L7, L3+L5	<=200m[656ft.]	1.25mm^2 [AWG16] or thicker
Max. length from ME to Indoor	e1, e2+e3, e4	<=10m[32ft.]*1	0.3-1.25 mm^2 [AWG22-16] *1
24VDC to AG-150A	n	<=50m[164ft.]	0.75-2.0 mm^2 [AWG18-14]

*1. If the length from ME to Indoor exceed 10m, use 1.25 mm^2 [AWG16] shielded cable, but the total length should be counted into Max. length via Heat source.

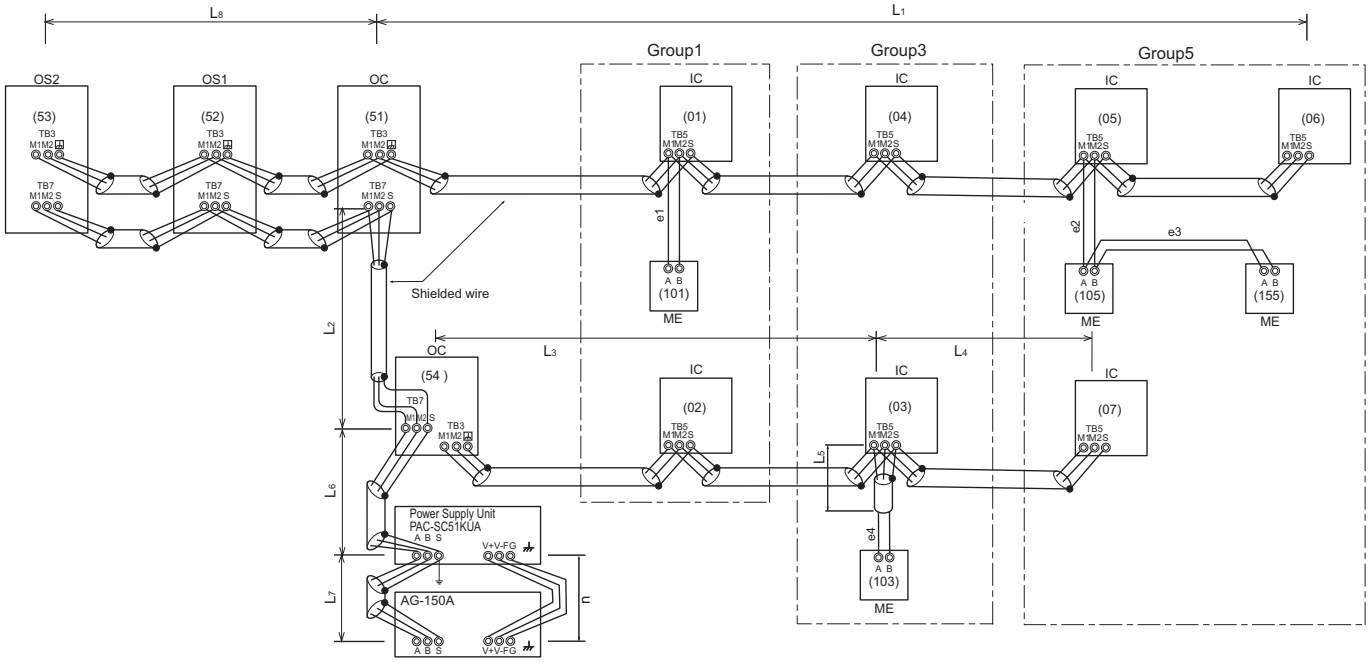

OC, OS1, OS2: Heat source unit controller; IC: Indoor unit controller; ME: ME remote controller

10-2. Transmission cable specifications

	Transmission cables (Li)	ME Remote controller cables	MA Remote controller cables
Type of cable	Shielding wire (2-core) CVVS, CPEVS or MVVS	Sheathed 2-core cable (unshielded) CVV	
Cable size	More than 1.25mm^2 [AWG16]	0.3～1.25mm^2 [AWG22～16] (0.75～1.25mm^2 [AWG18~16])*1	0.3～1.25mm^2 [AWG22～16] (0.75～1.25mm^2 [AWG18~16])*1
Remarks	—	When 10m [32ft] is exceeded, use cables with the same specification as transmission cables.	Max length : 200m [656ft]

*1 Connected with simple remote controller.

CVVS, MVVS : PVC insulated PVC jacketed shielded control cable
CPEVS : PE insulated PVC jacketed shielded communication cable
CVV : PV insulated PVC sheathed control cable

10-3. System configuration restrictions

10-3-1. Common restrictions for the CITYMULTI system

For each Heat source unit, the maximum connectable quantity of Indoor unit is specified at its Specifications table.

A) 1 Group of Indoor units can have 1-16 Indoor units;
*OA processing unit GUF-RD(H) is considered as Indoor unit.

B) Maximum 2 remote controllers for 1 Group; (MA/ME remote controllers cannot be present together in 1group.)

C) 1 LOSSNAY unit can interlock maximum 16 Indoor units; 1 Indoor unit can interlock only 1 LOSSNAY unit.

D) Maximum 3 System controllers are connectable when connecting to TB3 of the Heat source unit.

E) Maximum 3 System controllers are connectable when connecting to TB7 of the Heat source unit, if the transmission power is supplied by the Heat source unit.

F) 4 System controllers or more are connectable when connecting to TB7 of the Heat source unit, if the transmission power is supplied by the power supply unit PAC-SC51KUA. Details refer to 10-3-3-C.
*System controller connected as described in D) and E) would have a risk that the failure of connected Heat source unit would stop power supply to the System controller.

10-3-2. Ensuring proper communication power for M-NET

In order to ensure proper communication among Heat source unit, Indoor unit, LOSSNAY, and OA processing unit GUF-RD(H), and Controllers, the transmission power situation for the M-NET should be observed. In some cases, Transmission booster should be used. Taking the power consumption of Indoor unit sized P20-P140 as 1, the equivalent power consumption or supply of others are listed at Table 10-3-1 and Table 10-3-2.

Table 10-3-1 The equivalent power consumption

Indoor, OA unit	Indoor unit	BC controller	MA RC. LOSSNAY	ME Remote Contr.	Timers, System Contr.		ON/OFF Contr.	MN Conrerter	
Sized P20-P140 GUF-50, 100	Sized P200,P250	CMB	PAR-21MAA PAC-YT51CRA(B) PAR-FA32MA LGH-RX-E PZ-60DR-E	PAR-F27MEA PAC-SE51CRA PZ-52SF-E	PAC-SC30GRA PAC-SF44SRA PAC-YT34STA AG150A	GB-50A	PAC-YT40ANRA	CMS -MNF-B	CMS -MNG-E
1	7	2	0	1/4	1/2	3	1	1/2	2

*RC : Remote Controller

Table 10-3-2 The equivalent power supply

Transmission Booster	Power supply unit	Expansion controller	Heat source unit	Heat source unit
PAC-SF46EPA	PAC-SC51KUA	PAC-YG50ECA	Connector TB3 and TB7 total *	Connector TB7 only
25	5	6	32	6

*If PAC-SC51KUA is used to supply power at TB7 side, no power supply need from Heat source unit at TB7, Connector TB3 itself will therefore have 32.

With the equivalent power consumption values in Table 10-3-1 and Table 10-3-2, PAC-SF46EPA can be designed into the air-conditioner system to ensure proper system communication according to 10-3-2-A, B, C.

10-3-2-A) Firstly, count from TB3 at TB3 side the total quantity of Indoor units, OA process units and ME remote controller, Timers and System controllers. If the total quantity reaches 40, a PAC-SF46EPA should be set. In this case, Indoor unit sized P200, 250 is counted as 7 Indoor units, but MA remote controller(s), LOSSNAY, PZ-60DR-E is NOT counted.

10-3-2-B) Secondly, count from TB7 side to TB3 side the total transmission power consumption. If the total power consumption reaches 32, a PAC-SF46EPAshould be set. Yet, if a PAC-SC51KUAis used to supply power at TB7 side, count from TB3 side only.

10-3-2-C) Thirdly, count from TB7 at TB7 side the total transmission power consumption, If the total power consumption reaches 6, a PAC-SF46EPA should be set.

■ System example

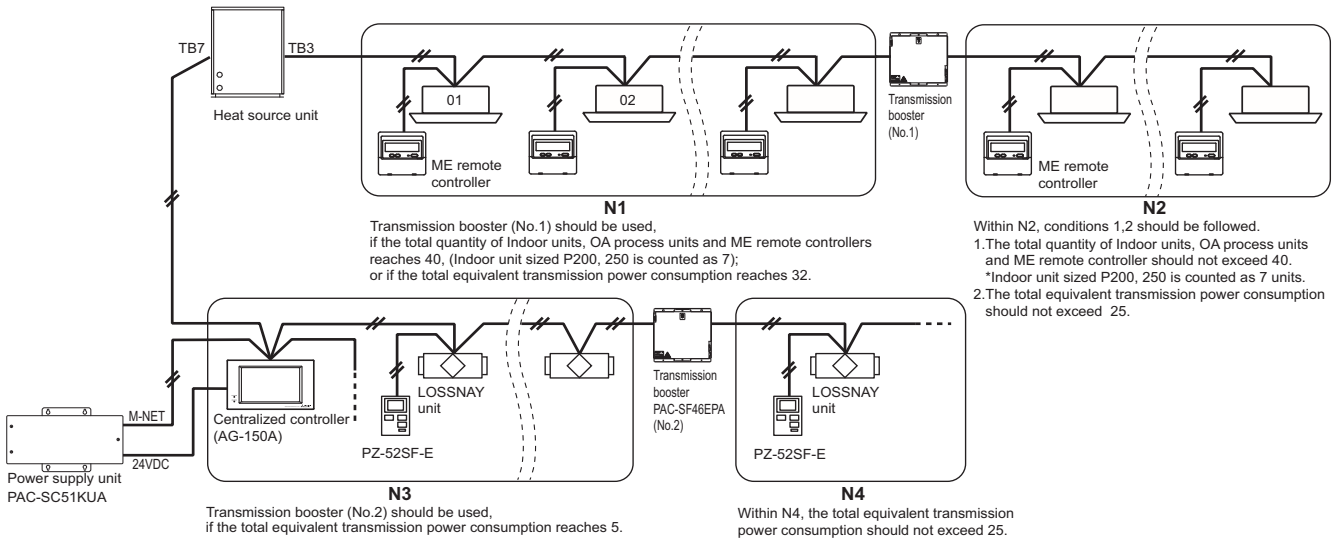

10-3-3. Ensuring proper power supply to System controller

The power to System controller (excluding LMAP02-E) is supplied via M-NET transmission line. M-NET transmission line at TB7 side is called Centralized control transmission line while one at TB3 side is called Indoor-Heat source unit transmission line. There are 3 ways to supply power to the System controller .
A) Connecting to TB3 of the Heat source unit and receiving power from the Heat source unit.
B) Connecting to TB7 of the Heat source unit and receiving power from the Heat source unit.
C) Connecting to TB7 of the Heat source unit but receiving power from power supply unit PAC-SC51KUA.

10-3-3-A. When connecting to TB3 of the Heat source unit and receiving power from the Heat source unit.

Maximum 3 System controllers can be connected to TB3.
If there is more than 1 Heat source unit, it is necessary to replace power supply switch connector CN41 with CN40 on one Heat source unit.

Fig. 10-3-3-A

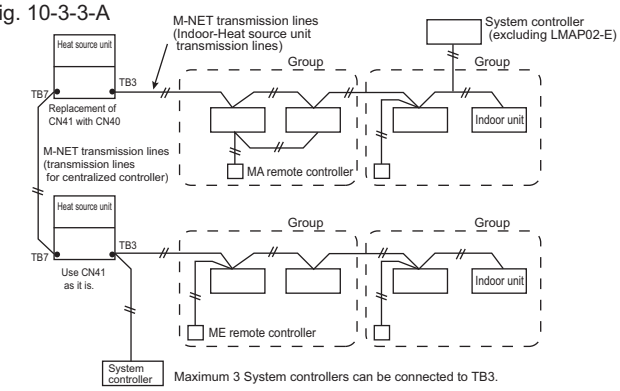

10-3-3-B. When connecting to TB7 of the Heat source unit and receiving power from the Heat source unit.

Maximum 3 System controllers can be connected to TB7 and receiving power from the Heat source unit.
It is necessary to replace power supply switch connector CN41 with CN40 on one Heat source unit.

Fig. 10-3-3-B

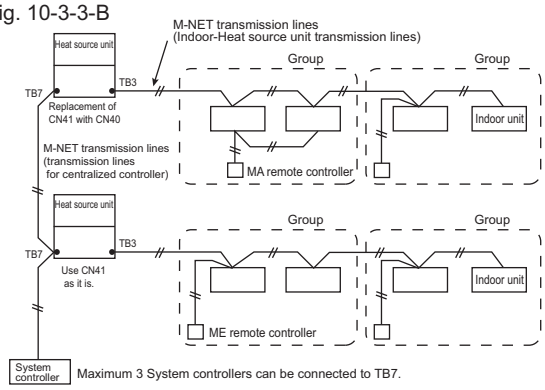

10-3-3-C. When connecting to TB7 of the Heat source unit but receiving power from PAC-SC51KUA.

When using PAC-SC51KUA to supply transmission power, the power supply connector CN41 on the Heat source units should be kept as it is. It is also a factory setting.
1 PAC-SC51KUA supports maximum 1 AG-150A unit due to the limited power 24VDC at its TB3.
However, 1 PAC-SC51KUA supplies transmission power at its TB2 equal to 6 Indoor units, which is referable at Table 10-3-2.
If PZ-52SF-E, Timers, System controller, ON/OFF controller connected to TB7 consume transmission power more than 5 (Indoor units), Transmission booster PAC-SF46EPA is needed. PAC-SF46EPA supplies transmission power equal to 25 Indoor units.

Fig. 10-3-3-C

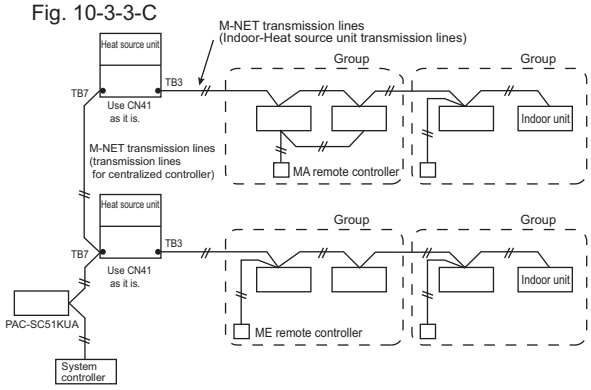

⚠ CAUTION

AG-150A is recommended to connect to TB7 because it performs back-up to a number of data.
In an air conditioner system has more than 1 Heat source units, AG-150A receiving transmission power through TB7 on one of the Heat source units would have a risk that the connected Heat source unit failure would stop power supply to AG-150A, and disrupt the whole system.
When applying apportioned electric power function, AG-150A is necessary to connected to TB7 and has its own power supply unit PAC-SC51KUA.*
*Power supply unit PAC-SC51KUA is for AG-150A.

10-3-4. Power supply to LM adapter LMAP02-E

1-phase 220-240V AC power supply is needed.
The power supply unit PAC-SC51KUA is not necessary when connecting only the LMAP02-E. Yet, make sure to change the power supply changeover connector CN41 to CN40 on the LM adapter.

10-3-5. Power supply to expansion controller

1-phase 100-240VAC power supply is needed.
The power supply unit PAC-SC51KUA is not necessary.
The expansion controller supplies power through TB3, which equals 6 indoor units. (refer to Table 10-3-2)

10-3-6. Power supply to BM ADAPTER

1-phase 100-240VAC power supply is needed.
The power supply unit PAC-SC51KUA is not necessary when only BM ADAPTER is connected.
Yet, make sure to move the power jumper from CN41 to CN40 on the BM ADAPTER.

10-4. Address setting

10-4-1. Switch operation

In order to constitute CITY MULTI in a complete system, switch operation for setting the unit address No. and connection No. is required.

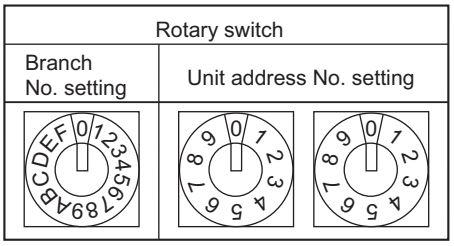

① Address No. of Heat source unit, indoor unit and remote controller.
The address No. is set at the address setting board.
In the case of WR2 system, it is necessary to set the same No. at the branch No. switch of indoor unit as that of the BC controller connected. (When connecting two or more branches, use the lowest branch No.)

② Caution for switch operations

- Be sure to shut off power source before switch setting. If operated with power source on, switch can not operate properly.
- No units with identical unit address shall exist in one whole air conditioner system. If set erroneously, the system can not operate.

③ MA remote controller

- When connecting only one remote controller to one group, it is always the main remote controller.
  When connecting two remote controllers to one group, set one remote controller as the main remote controller and the other as the sub remote controller.
- The factory setting is "Main".

PAR-21MAA
The MA remote controller does not have the switches listed above.
Refer to the installation manual for the function setting.

PAC-YT51CRB

Setting the dip switches

There are switches on the front of the remote controller. Remote controller Main/Sub and other function settings are performed using these switches. Ordinarily, only change the Main/Sub setting of SW1.
(The factory settings are all "ON".)

SW No	SW contents Main	ON	OFF	Comment
1	Remote controller Main/Sub setting	Main	Sub	Set one of the two remote controllers at one group to "Main"
2	Temperature display units setting	Celsius	Fahrenheit	When the temperature is displayed in [Fahrenheit], set to "No".
3	Cooling/heating display in AUTO mode	Yes	No	When you do not want to display "Cooling" and "Heating" in the Auto mode, set to "No".

10-4-2. Rule of setting address

Unit		Address setting	Example	Note
Indoor unit		01 ~ 50	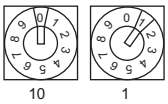	Use the most recent address within the same group of indoor units. Make the indoor units address connected to the BC controller (Sub) larger than the indoor units address connected to the BC controller (Main). If applicable, set the sub BC controllers in an PQRY system in the following order: (1) Indoor unit to be connected to the BC controller (Main) (2) Indoor unit to be connected to the BC controller (No.1 Sub) (3) Indoor unit to be connected to the BC controller (No.2 Sub) Set the address so that (1)<(2)<(3)
Heat source unit		51 ~ 99, 100	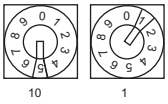	The smallest address of indoor unit in same refrigerant system + 50 ∗The address automatically becomes "100" if it is set as "01~ 50"
BC controller (Main)		52 ~ 99, 100	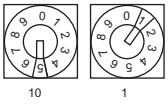	The address of Heat source unit + 1 ∗Please reset another address between 01 and 50 when two addresses overlap. ∗The address automatically becomes "100" if it is set as "01~ 50"
BC controller (Sub)		52 ~ 99, 100	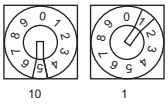	Lowest address within the indoor units connected to the BC controller (Sub) plus 50.
Local remote controller	ME, LOSSNAY Remote controller (Main)	101 ~ 150	1 Fixed 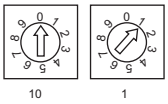	The smallest address of indoor unit in the group + 100 ∗The place of "100" is fixed to "1"
Local remote controller	ME, LOSSNAY Remote controller (Sub)	151 ~ 199, 200	1 Fixed 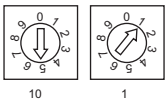	The address of main remote controller + 50 ∗The address automatically becomes "200" if it is set as "00"
System controller	Group remote controller	201 ~ 250	2 Fixed 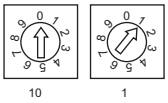	The smallest group No. to be managed + 200
System controller	System remote controller	000, 201 ~ 250	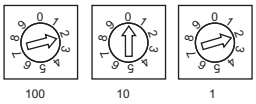	
System controller	ON/OFF remote controller	000, 201 ~ 250	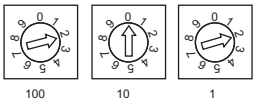	The smallest group No. to be managed + 200 ∗The smallest group No. to be managed is changeable.
System controller	AG-150A GB-50A	000, 201 ~ 250	0 0 0 100 10 1	
System controller	PAC-YG50ECA	000, 201 ~ 250	0 0 0 100 10 1	∗Settings are made on the initial screen of AG-150A.
System controller	BAC-HD150	000, 201 ~ 250	0 0 0 100 10 1	∗Settings are made with setting tool of BM ADAPTER.
System controller	LMAP02-E	201 ~ 250	2 Fixed 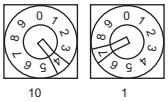	

∗Heat source unit here mentioned includes PQHY, PQRY.

10-4-3. System examples

Factory setting

Original switch setting of the heat source units, indoors, controllers, LMAP and BM ADAPTER at shipment is as follows.

- Heat source unit : Address: 00, CN41: U (Jumper), DipSW2-1: OFF
- Indoor unit : Address: 00
- ME remote controller : Address: 101
- LMAP : Address: 247, CN41: U (Jumper), DipSW1-2: OFF
- BM ADAPTER : Address: 00

Setting at the site

- DipSW2-1(Heat source) : When the System Controller is used, all the Dip SW2-1 at the heat source units should be set to "ON". * Dip SW2-1 remains OFF when only LMAP02-E is used.
- DipSW1-2(LMAP) : When the LMAP is used together with System Controller, DipSW1-2 at the LMAP should be set to "ON".
- CN40/CN41 : Change jumper from CN41 to CN 40 at heat source unit control board will activate central transmission power supply to TB7;
  (Change jumper at only one heat source unit when activating the transmission power supply without using a power supply unit.)
  Change jumper from CN41 to CN 40 at LMAP will activate transmission power supply to LMAP itself;
  Power supply unit is recommended to use for a system having more than 1 heat source unit, because the central transmission power supply from TB7 of one of heat source units is risking that the heat source unit failure may let down the whole system controller system.

10-4-3-1. MA remote controller, Single-refrigerant-system, No System Controller

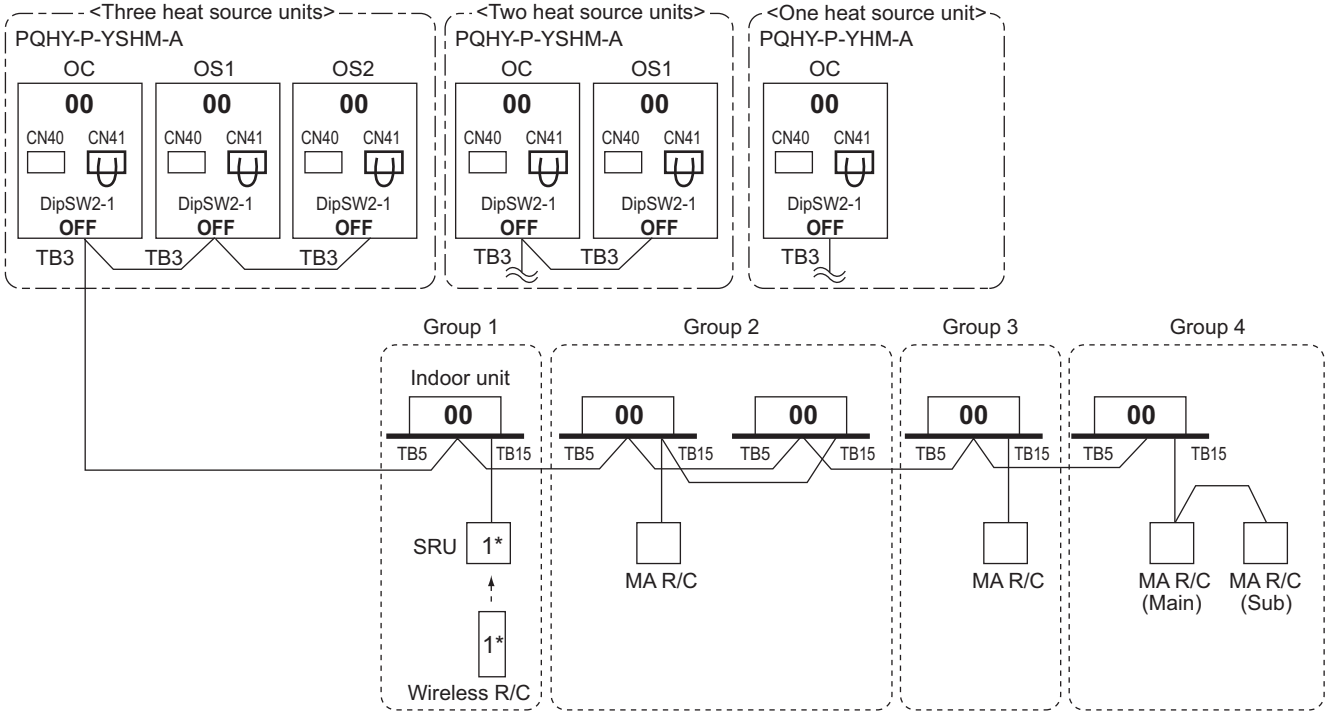

*1 For Wireless R/C and Signal receiver unit (SRU), channel 1, 2 and 3 are selectable and should be set to same channel.

NOTE:

1. Heat source units OC, OS1 and OS2 in one refrigerant circuit system are automatically detected.
   OC, OS1 and OS2 are ranked in descending order of capacity. If units are the same capacity, they are ranked in ascending order of their address.
2. No address setting is needed.
3. For a system having more than 32 indoor unit (P15-P140), confirm the need of Booster at **10-3 "System configuration restrictions".**

10-4-3. System examples

10-4-3-2. MA remote controller, Single-refrigerant-system, System Controller

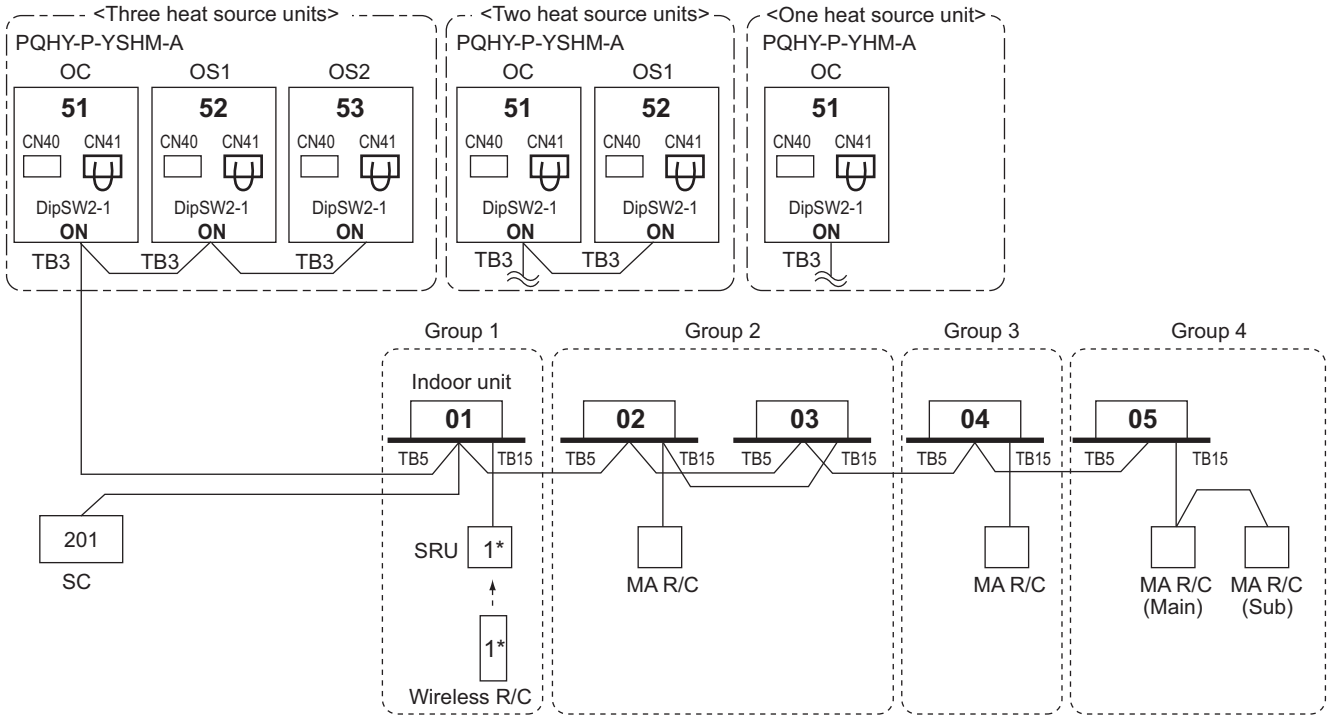

*1 For Wireless R/C and Signal receiver unit (SRU), channel 1, 2 and 3 are selectable and should be set to same channel.

*SC can be connected to TB3 side or TB7 side;
Should SC connected to TB7 side, change Jumper from CN41 to CN40 at the Heat source unit module so as to supply power to the SC.

NOTE:

1. Heat source units OC, OS1 and OS2 in one refrigerant circuit system are automatically detected.
   OC, OS1 and OS2 are ranked in descending order of capacity. If units are the same capacity, they are ranked in ascending order of their address.
2. Address should be set to Indoor units and centralized controller.
3. For a system having more than 32 indoor unit (P15-P140), confirm the need of Booster at **10-3 "System configuration restrictions".**

10-4-3. System examples

10-4-3-3. MA remote controller, Multi-refrigerant-system, System Controller at TB7/TB3 side, Booster for long M-NET wiring

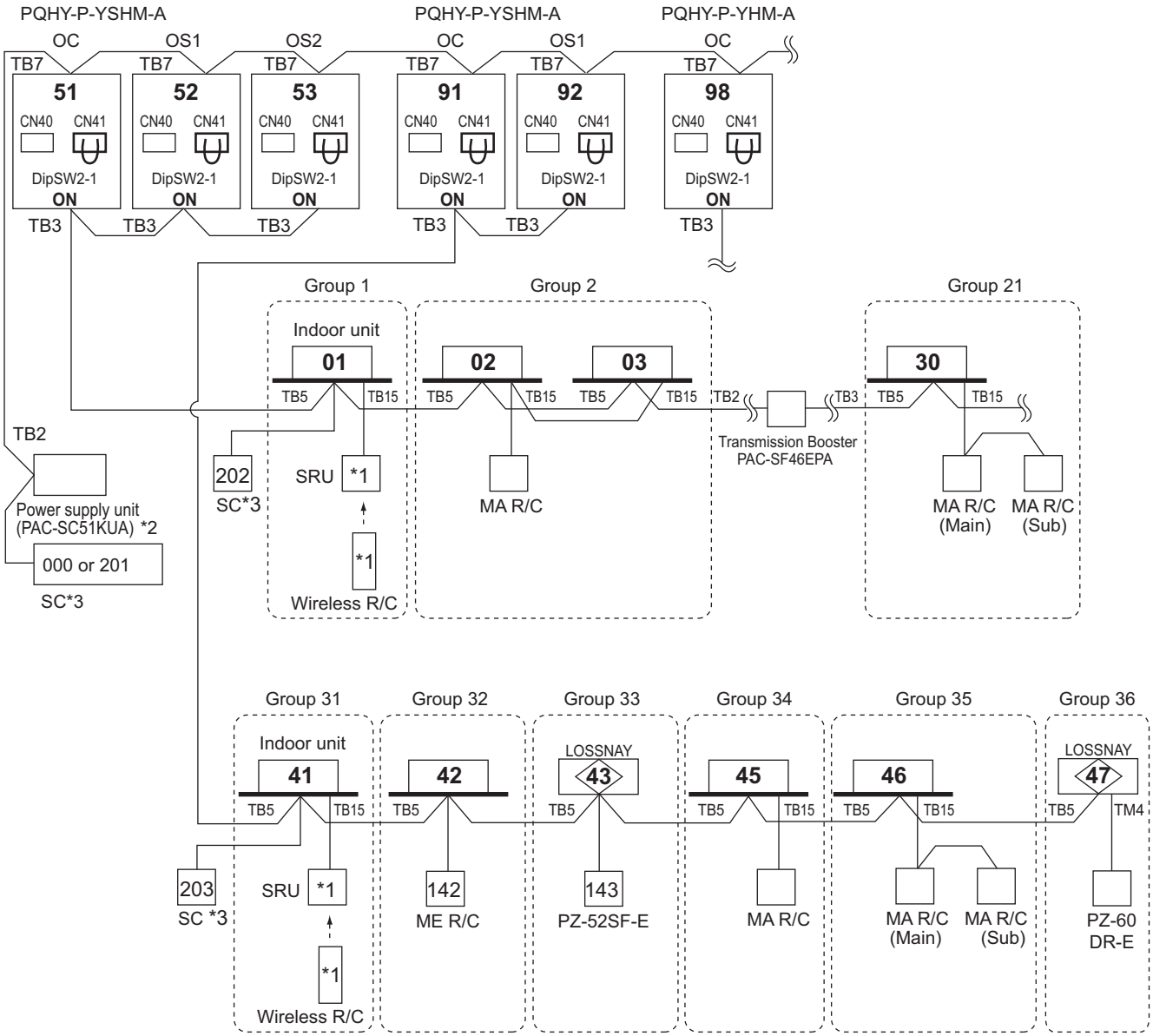

*1 For Wireless R/C and Signal receiver unit (SRU), channel 1, 2 and 3 are selectable and should be set to same channel.

*2 System controller should connect to TB7 at Heat source unit and use power supply unit together in Multi-Refrigerant-System. For AG-150A, 24V DC should be used with the PAC-SC51KUA.

*3 When multiple system controllers are connected in the system, set the controller with more functions than others as a "main" controller and others as "sub".
Make the setting to only one of the system controllers for "prohibition of operation from local remote controller".

NOTE:

1. Heat source units OC, OS1 and OS2 in one refrigerant circuit system are automatically detected.
   OC, OS1 and OS2 are ranked in descending order of capacity. If units are the same capacity, they are ranked in ascending order of their address.
2. Address should be set to Indoor units, LOSSNAY and system controller.
3. M-NET power is supplied by the Heat source unit at TB3, while Indoor unit and ME remote controller consume the M-NET power for transmission use. The power balance is needed to consider for long M-NET wiring. Details refer to **10-3 "System configuration restrictions"**.

10-4-3. System examples

10-4-3-4. ME remote controller, Single-refrigerant-system, No system controller

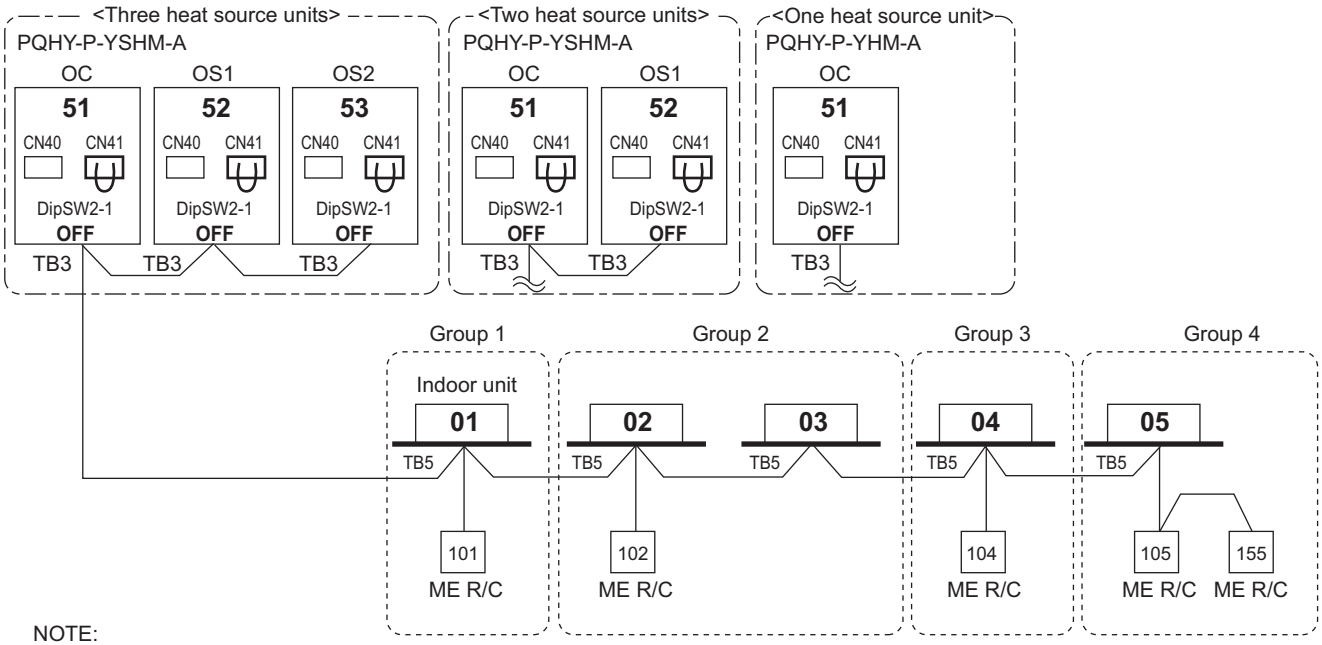

NOTE:

1. Heat source units OC, OS1 and OS2 in one refrigerant circuit system are automatically detected.
   OC, OS1 and OS2 are ranked in descending order of capacity. If units are the same capacity, they are ranked in ascending order of their address.
2. Address should be set to Indoor units, system controller and ME remote controllers.
3. M-NET power is supplied by the Heat source unit at TB3, while Indoor unit and ME RC consume the M-NET power for transmission use. The power balance is needed to consider for long M-NET wiring. Details refer to **10-3 "System configuration restrictions".**

10-4-3-5. ME remote controller, Single-refrigerant-system, System controller, LOSSNAY

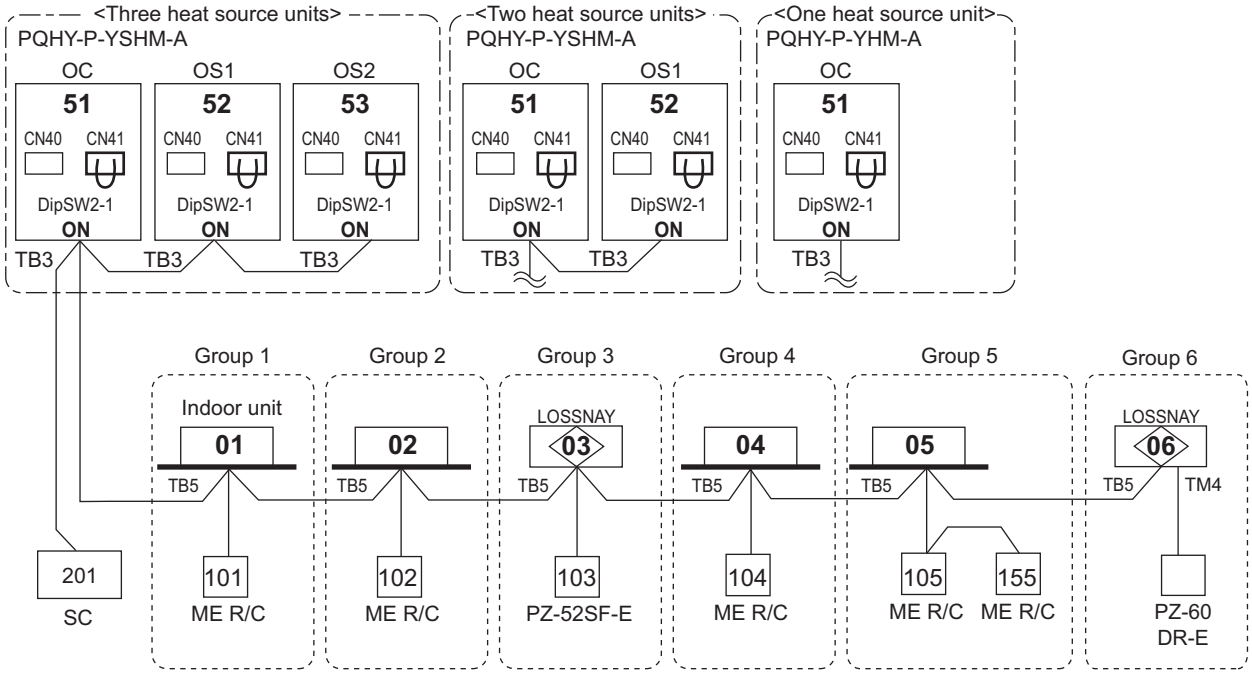

*SC can be connected to TB3 side or TB7 side;
Should SC connected to TB7 side, change Jumper from CN41 to CN40 at the Heat source unit module so as to supply power to the SC.

NOTE:

1. Heat source units OC, OS1 and OS2 in one refrigerant circuit system are automatically detected.
   OC, OS1 and OS2 are ranked in descending order of capacity. If units are the same capacity, they are ranked in ascending order of their address.
2. Address should be set to Indoor units, LOSSNAY centralized controller, ME remote controllers.
3. For a system having more than 32 indoor unit (P15-P140), confirm the need of Booster at **10-3 "System configuration restrictions".**

10-4-3. System examples

10-4-3-6. ME remote controller, Multi-refrigerant-system, System Controller at TB 7side, LOSSNAY, Booster for long M-NET wiring

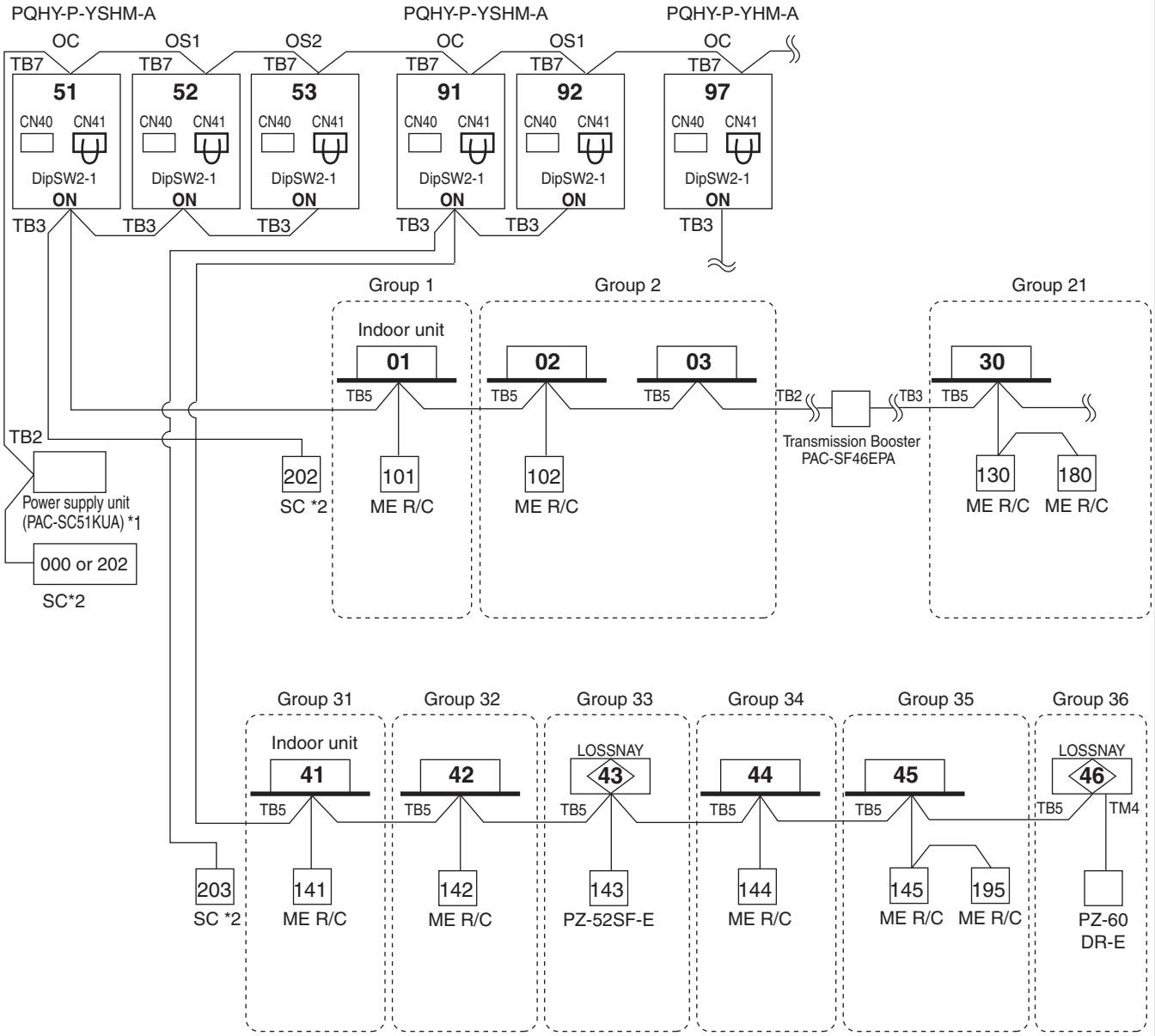

*1 System controller should connect to TB7 at Heat source unit and use power supply unit together in Multi-Refrigerant-System.
For AG-150A, 24V DC should be used with the PAC-SC51KUA.

*2 When multiple system controllers are connected in the system, set the controller with more functions than others as a "main" controller and others as "sub".
Make the setting to only one of the system controllers for "prohibition of operation from local remote controller".

NOTE:

1. Heat source units OC, OS1 and OS2 in one refrigerant circuit system are automatically detected.
OC, OS1 and OS2 are ranked in descending order of capacity. If units are the same capacity, they are ranked in ascending order of their address.

2. M-NET power is supplied by the Heat source unit at TB3, while Indoor unit and ME remote controller consume the M-NET power for transmission use. The power balance is needed to consider for long M-NET wiring.
Details refer to **10-3 "System configuration restrictions".**

10-4-3-7. ME remote controller, Multi-refrigerant-system, No Power supply unit

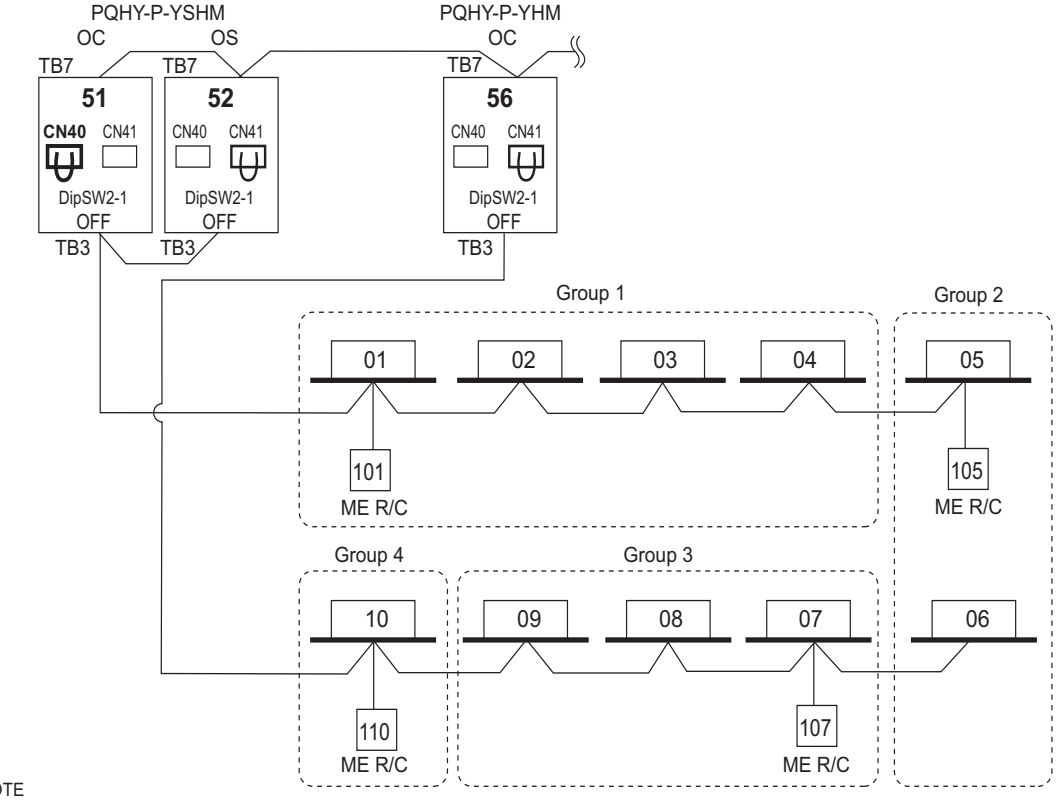

NOTE
- It is necessary to change the connecter to CN40 on the heat source unit control board (only one heat source unit) when the group is set between other refrigerant systems.
- It is necessary to set on the remote controller by manual when group sets on the different refrigerant system. Please refer to remote controller installation manual.

10-4-3-8. ME remote controller, Multi-refrigerant-system, System Controller at TB7 side, No Power sypply unit

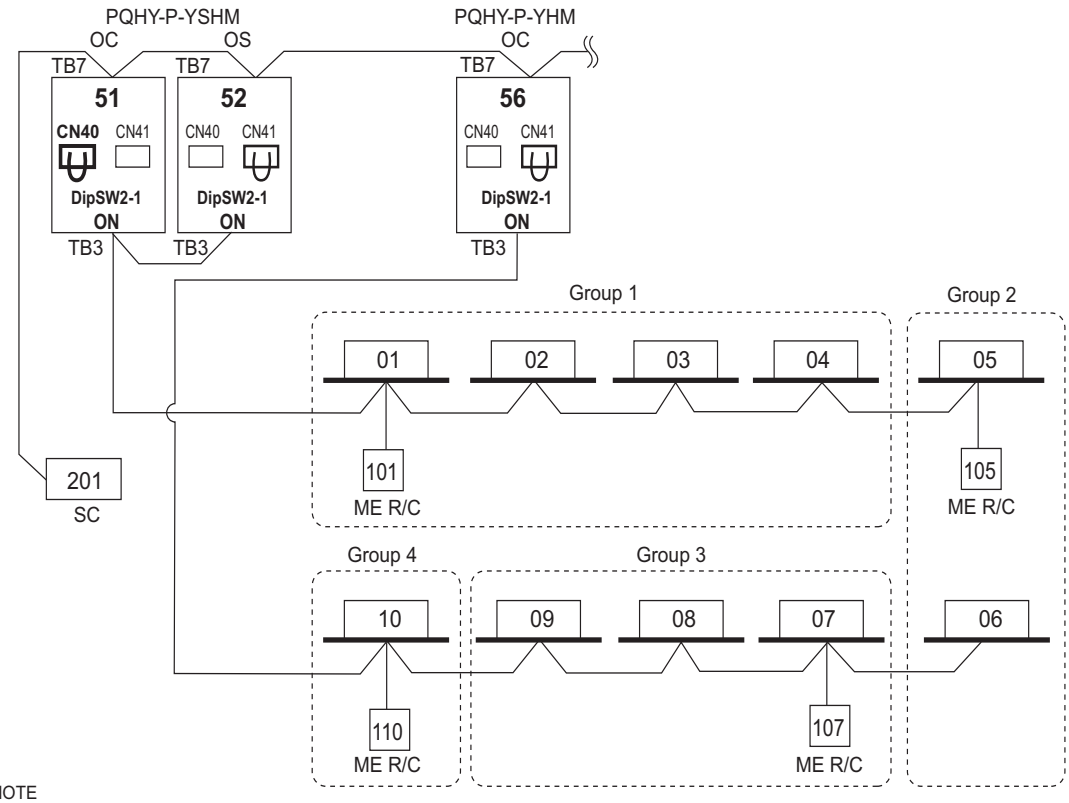

NOTE
- It is necessary to change the connecter to CN40 on the heat source unit control board (only one heat source unit) when the group is set between other refrigerant systems.
- It is necessary to set on the remote controller by manual when group sets on the different refrigerant system. Please refer to remote controller installation manual.

10-4-3-9. TG-2000A(*1)+AG-150A*2

AG-150A can control max. 50 indoor units;
TG-2000A can control max. 40 pieces of AG-150A;*3
TG-2000A can control max. 2000 indoor units.

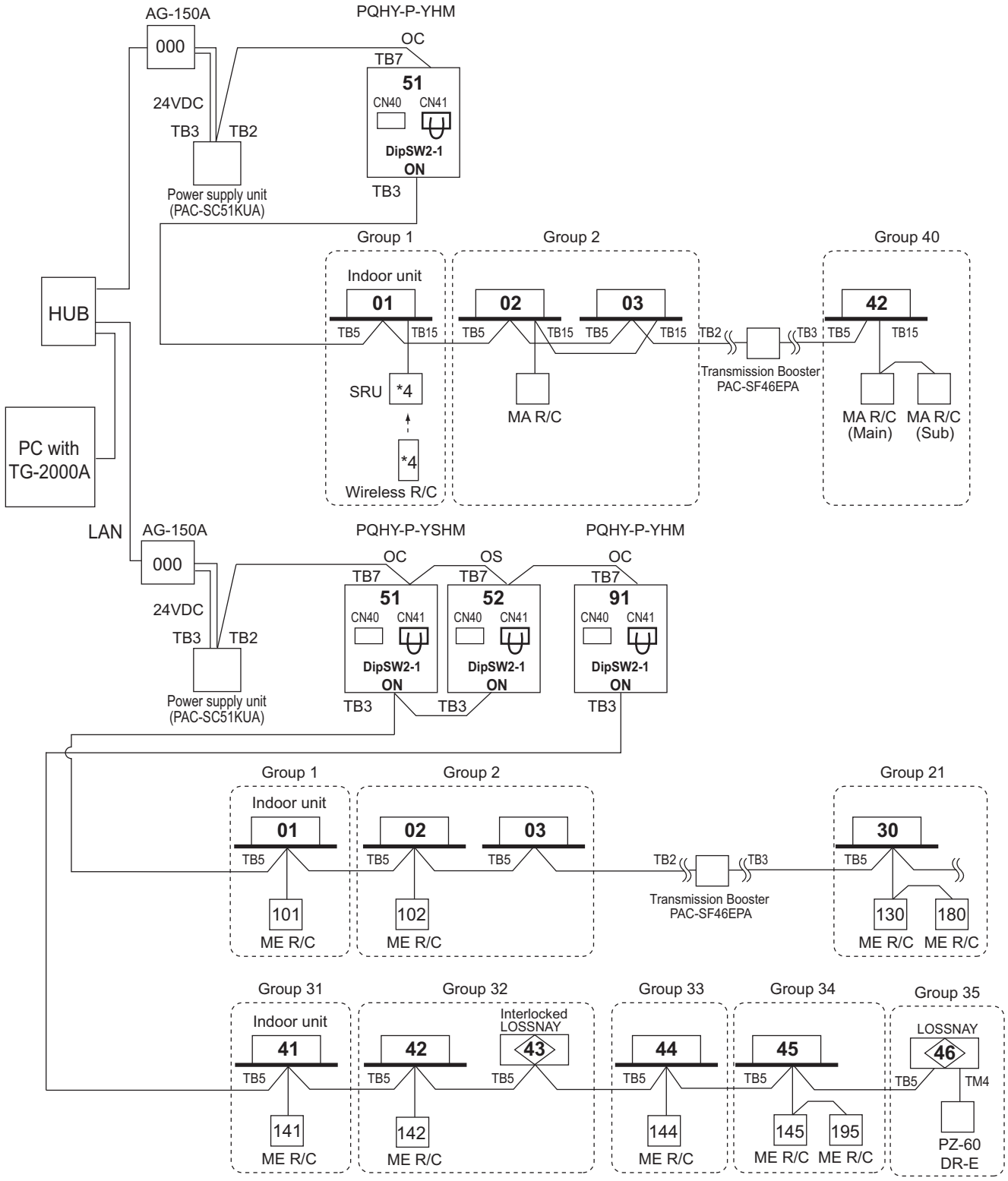

*1 TG-2000A (Ver.5.5 or later) supports AG-150A (Ver.1 series).
TG-2000A (Ver. 6.1), planned to be released in future updates, will support AG-150A (Ver. 2.1) connected with the expansion controller (EC).
*2 AG-150A (Ver.1 series) does not support the expansion controller (EC).
*3 When AG-150A connected with the expansion controller (EC) is connected, the number of EC will be the maximum controllable number.
TG-2000A can control up to 40 pieces of EC or AG-150A (without EC connection).
*4 For Wireless R/C and Signal receiver unit (SRU), channel 1, 2 and 3 are selectable and should be set to same channel.

10-4-3. System examples

10-4-3-10. AG-150A + PAC-YG50ECA (Expansion controller)

AG-150A can control max. 150 indoor units/ via expansion controllers.

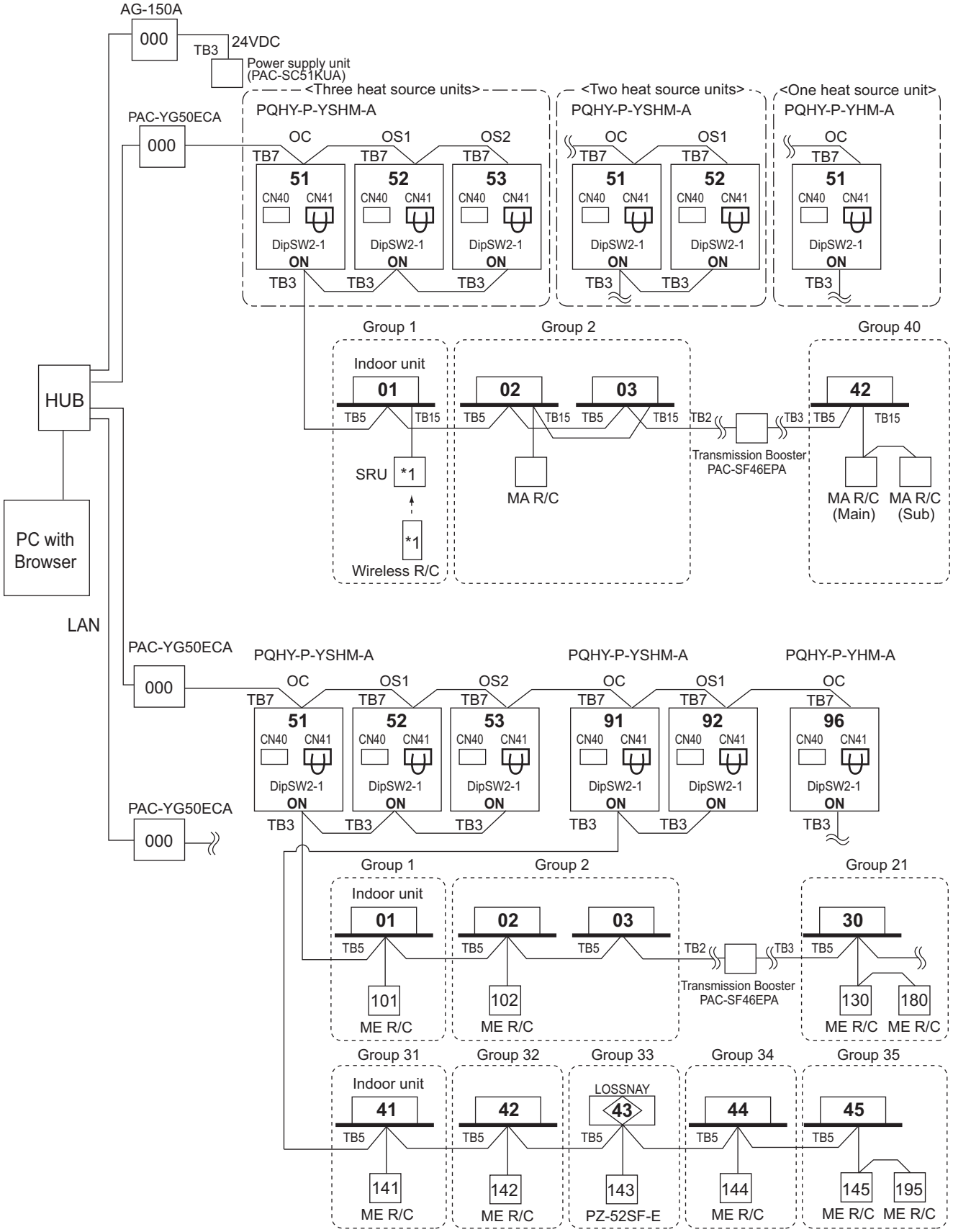

NOTE

- When connecting AG-150A to PAC-YG50ECA, TB2 for power supply unit does not need to be connected to AG-150A.

*1 For Wireless R/C and Signal receiver unit (SRU), channel 1, 2 and 3 are selectable and should be set to same channel.

10-4-3. System examples

10-4-3-11. LMAP

LMAP can transmission for max. 50 indoor units;
If system controller (SC) is used, DipSW1-2 at LMAP and DipSW2-1 at Heat source unit should set to "ON".
Change Jumper from CN41 to CN40 to activate power supply to LMAP itself for those LMAP connected without system controller (SC).

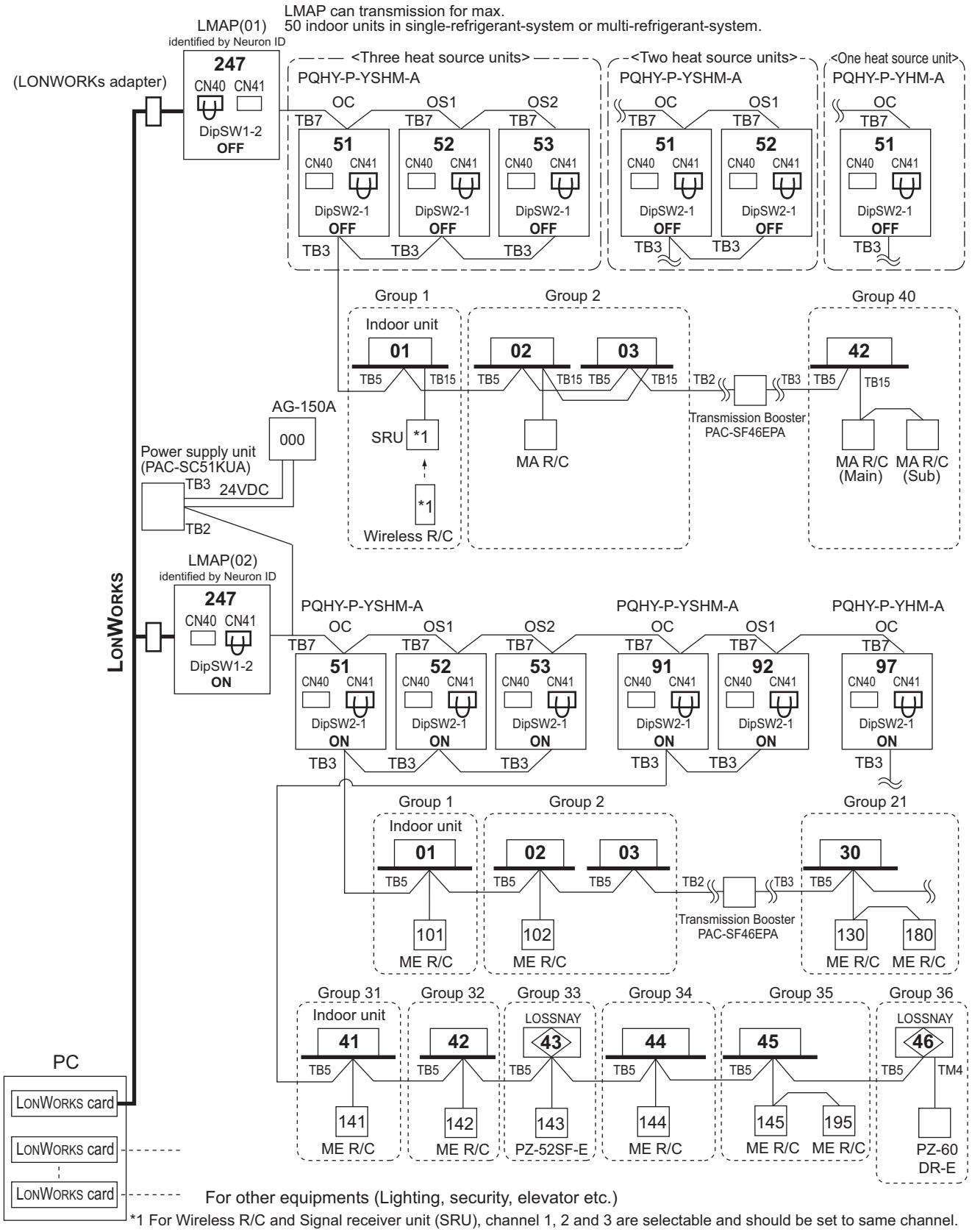

*1 For Wireless R/C and Signal receiver unit (SRU), channel 1, 2 and 3 are selectable and should be set to same channel.

10-4-3. System examples

10-4-3-12. BM ADAPTER

BM ADAPTER can transmission for max. 50 indoor units;
Change Jumper from CN41 to CN40 to activate power supply to BM ADAPTER itself for those BM ADAPTER connected without the power supply unit.

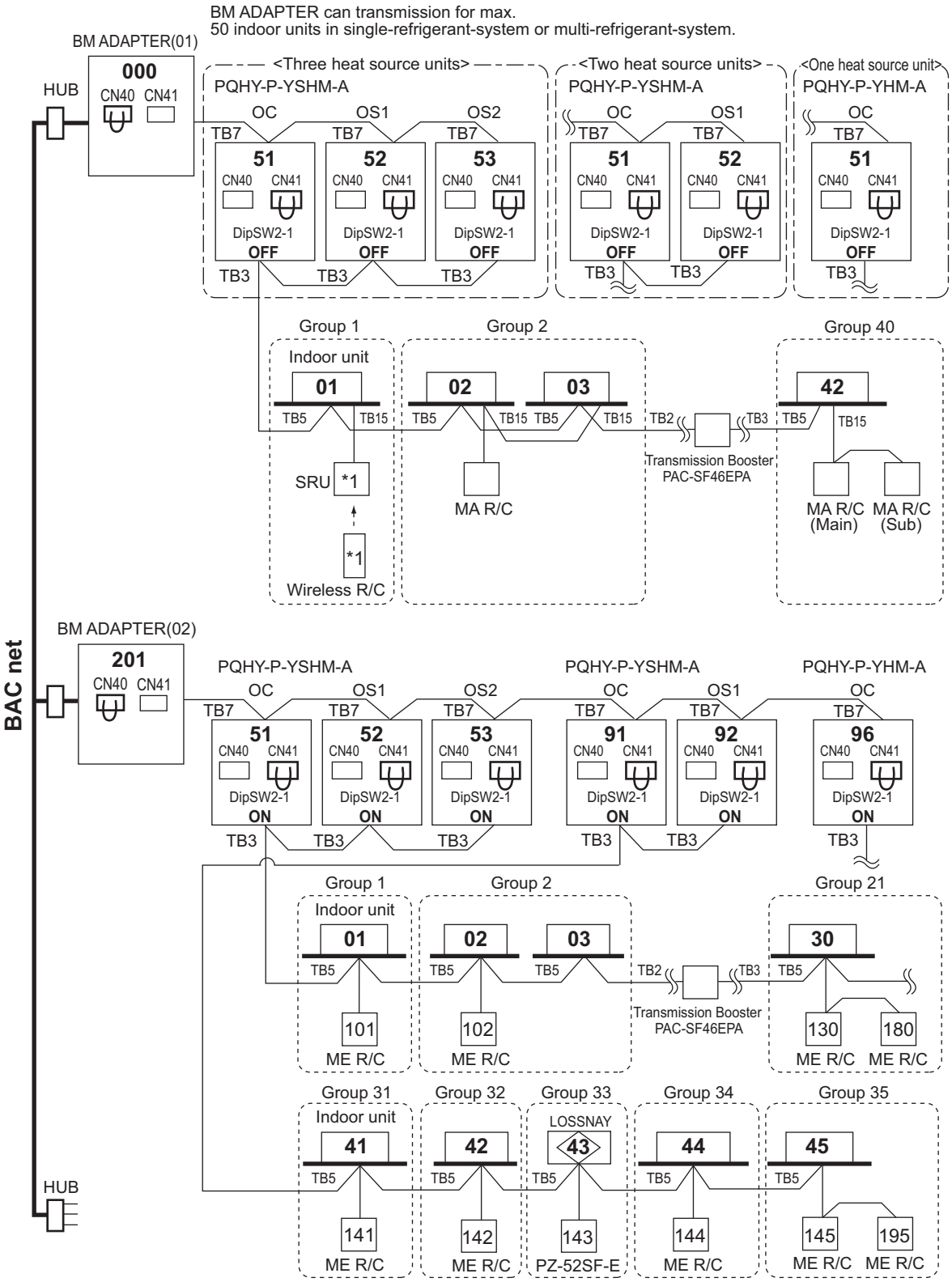

For other equipments (Lighting, security, elevator etc.)

*1 For Wireless R/C and Signal receiver unit (SRU), channel 1, 2 and 3 are selectable and should be set to same channel.

11. Piping Design

11-1. R410A Piping material

Refrigerant pipe for CITY MULTI shall be made of phosphorus deoxidized copper, and has two types.
A. Type-O : Soft copper pipe (annealed copper pipe), can be easily bent with human's hand.
B. Type-1/2H pipe : Hard copper pipe (Straight pipe), being stronger than Type-O pipe of the same radical thickness.

The maximum operation pressure of R410A air conditioner is 4.30 MPa [623psi]. The refrigerant piping should ensure the safety under the maximum operation pressure. MITSUBISHI ELECTRIC recommends pipe size as Table 3-1, or You shall follow the local industrial standard. Pipes of radical thickness 0.7mm or less shall not be used.

Table 3-1. Copper pipe size and radial thickness for R410A CITY MULTI.

Size (mm)	Size (inch)	Radial thickness (mm)	Radial thickness (mil)	Pipe type
ø6.35	ø1/4"	0.8	[32]	Type-O
ø9.52	ø3/8"	0.8	[32]	Type-O
ø12.7	ø1/2"	0.8	[32]	Type-O
ø15.88	ø5/8"	1.0	[40]	Type-O
ø19.05	ø3/4"	1.2	[48]	Type-O
ø19.05	ø3/4"	1.0	[40]	Type-1/2H or H
ø22.2	ø7/8"	1.0	[40]	Type-1/2H or H
ø25.4	ø1"	1.0	[40]	Type-1/2H or H
ø28.58	ø1-1/8"	1.0	[40]	Type-1/2H or H
ø31.75	ø1-1/4"	1.1	[44]	Type-1/2H or H
ø34.93	ø1-3/8"	1.2	[48]	Type-1/2H or H
ø41.28	ø1-5/8"	1.4	[56]	Type-1/2H or H

* For pipe sized ø19.05 (3/4") for R410A air conditioner, choice of pipe type is up to you.
* The figures in the radial thickness column are based on the Japanese standards and provided only as a reference. Use pipes that meet the local standards.

Flare

Due to the relative higher operation pressure of R410A compared to R22, the flare connection should follow dimensions mentioned below so as to achieve enough the air-tightness.

Flare pipe	Pipe size	A (For R410A) (mm[in.])
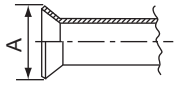	ø6.35 [1/4"]	9.1
	ø9.52 [3/8"]	13.2
	ø12.70 [1/2"]	16.6
	ø15.88 [5/8"]	19.7
	ø19.05 [3/4"]	24.0

Flare nut	Pipe size	B (For R410A) (mm[in.])
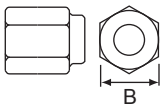	ø6.35 [1/4"]	17.0
	ø9.52 [3/8"]	22.0
	ø12.70 [1/2"]	26.0
	ø15.88 [5/8"]	29.0
	ø19.05 [3/4"]	36.0

11-2. Piping Design

11-2-1. PQHY-P650-900YSHM

Note1. No Joint after Header; Piping direct to Indoor Unit from Header;
Note2. As bents cause pressure loss on transportation of refrigerant, fewer bents design is better;
Piping length needs to consider the actual length and equivalent length which bents are counted.
Equivalent piping length (m)=Actual piping length+"M" x Quantity of bent.

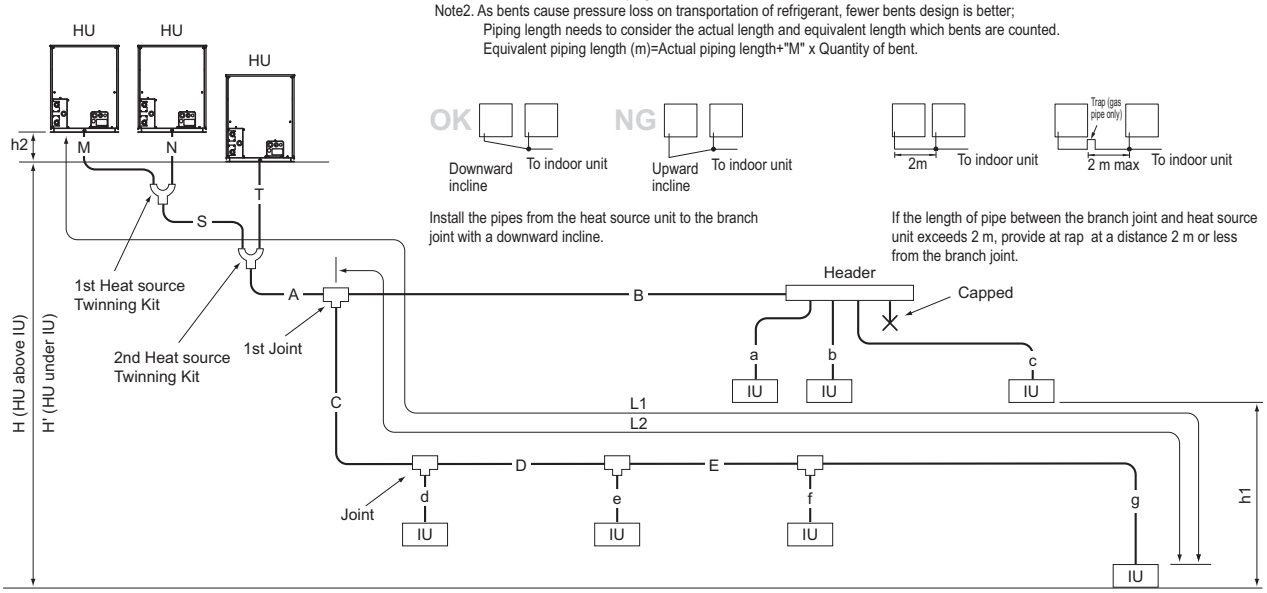

Fig. 3-2-1C Piping scheme

IU : Indoor unit , HU : Heat source unit

Table3-2-3-1. Piping length (m [ft.])

Item	Piping in the figure	Max. length	Max. equivalent length
Total piping length	S+T+M+N+A+B+C+D+E+a+b+c+d+e+f+g	500[1640']	-
Distance between HU and HU	M+N+S+T	10[32']	-
Height between HU and HU	h2	0.1[0.3']	-
Farthest IU from HU (L1)	M(N)+S+A+C+D+E+g / M(N)+S+A+B+c	165[541']	190[623']
Farthest IU from the first Joint (L2)	C+D+E+g / B+c	40[131']	40[131']
Height between HU and IU (HU above IU)	H	50[164'] *1	-
Height between HU and IU (HU above IU)	H'	40[131'] *2	-
Height between IU and IU	h1	15[49']	-

HU: Heat source Unit, IU: Indoor Unit
*1 90m is available depending on the model and installation conditions. For more detailed information, contact your local distributor.
*2 60m is available depending on the model and installation conditions. For more detailed information, contact your local distributor.

Table3-2-3-2. Bent equivalent length "M"

Heat source Model	M (m/bent [ft./bent])
PQHY-P650YSHM-A	0.50 [1.64]
PQHY-P700YSHM-A	0.70 [2.29]
PQHY-P750YSHM-A	0.70 [2.29]
PQHY-P800YSHM-A	0.70 [2.29]
PQHY-P850YSHM-A	0.80 [2.62]
PQHY-P900YSHM-A	0.80 [2.62]

Table3-2-3-3. Piping "A" size selection rule (mm [in.])

Heat source and the first Joint	Pipe(Liquid)	Pipe(Gas)
CMY-Y300VBK2=CMY-Y302-G2	ø19.05[3/4"]	ø34.93[1-3/8"]*1
	ø19.05[3/4"]	ø41.28[1-5/8"]*2

For Piping size"M","N","S","T", please refer to specification of the Twining kit CMY-Y300VBK2 at the Heat source unit's external drawing.

*1 PQHY-P650-800YSHM
*2 PQHY-P850, 900YSHM

Table3-2-3-6. R410A Joint selection rule

Total down-stream Indoor capacity	Joint
~ P200	CMY-Y102S-G2
P201 ~ P400	CMY-Y102L-G2
P401 ~ P650	CMY-Y202-G2
P651 ~	CMY-Y302-G2

*The total capacity of the units in the downstream of the branch joint on at least one of the piping lines that are connected to the branch joint should be 650 or below.
If the total capacity of the units in the downstream of the branch joints on both lines is 650 or above use two branch joints (CMY-Y302-G2).
*Concerning detailed usage of Joint parts, refer to its Installation Manual.

Table3-2-3-4. Piping"B","C","D","E" size selection rule (mm [in.])

Total down-stream Indoor capacity	Pipe(Liquid)	Pipe(Gas)
~ P140	ø9.52 [3/8"]	ø15.88 [5/8"]
P141 ~ P200	ø9.52 [3/8"]	ø19.05 [3/4"]
P201 ~ P300	ø9.52 [3/8"]	ø22.20 [7/8"]
P301 ~ P400	ø12.70 [1/2"]	ø28.58 [1-1/8"]
P401 ~ P650	ø15.88 [5/8"]	ø28.58 [1-1/8"]
P651 ~ P800	ø19.05 [3/4"]	ø34.93 [1-3/8"]
P801 ~	ø19.05 [3/4"]	ø41.28 [1-5/8"]

Table3-2-3-5. Piping"a","b","c","d","e","f","g" size selection rule (mm [in.])

Indoor Unit size	Pipe(Liquid)	Pipe(Gas)
P20,P25,P32,P40,P50,GUF-50RD(H)	ø6.35 [1/4"]	ø12.70 [1/2"]
P63,P71,P80,P100,P125,P140,GUF-100RD(H)	ø9.52 [3/8"]	ø15.88 [5/8"]
P200	ø9.52 [3/8"]	ø19.05 [3/4"]
P250	ø9.52 [3/8"]	ø22.20 [7/8"]

Table3-2-3-7. R410A Header selection rule

	4-branch Header	8-branch Header	10-branch Header
	CMY-Y104-G	CMY-Y108-G	CMY-Y1010-G
Total down-stream Indoor capacity	<=P200	<=P400	<=P650

* CMY-Y104-G can directly connect PQHY-P200YHM, but can NOT directly connect PQHY-P250YHM or above;
* CMY-Y108-G can directly connect PQHY-P200-450Y(S)HM, but can NOT directly connect PQHY-P500YSHM or above;
* CMY-Y1010-G can directly connect PQHY-P200-650Y(S)HM;
* CMY-Y104-G can NOT connect P200,P250 Indoor, but CMY-Y108, Y1010-G can do;
* Concerning detailed usage of Header parts, refer to its Installation Manual.

Note3. Indoor capacity is described as its model size;
For example, PEFY-P32VMA-E, its capacity is P32;
Note4. Total down-stream Indoor capacity is the summary of the model size of Indoors downstream.
For example, PEFY-P25VMA-E+PEFY-P32VMA-E: Total Indoor capacity=P25+P32=P57
Note5. Piping sized determined by the Total down-stream indoor capacity is NOT necessary to be bigger than the up-stream one.
i.e. A>=B; A>=C>=D

11-2-2. Refrigerant charging calculation

Sample connection(with 8 indoor units)

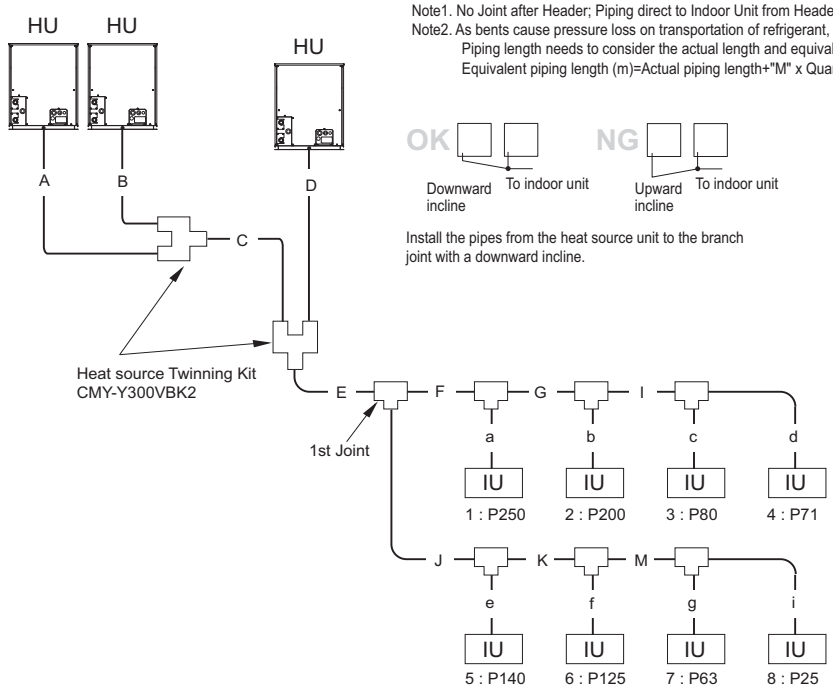

Note1. No Joint after Header; Piping direct to Indoor Unit from Header;
Note2. As bents cause pressure loss on transportation of refrigerant, fewer bents design is better;
Piping length needs to consider the actual length and equivalent length which bents are counted.
Equivalent piping length (m)=Actual piping length+"M" x Quantity of bent.

Install the pipes from the heat source unit to the branch joint with a downward incline.

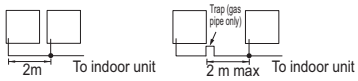

If the length of pipe between the branch joint and heat source unit exceeds 2 m, provide at rap at a distance 2 m or less from the branch joint.

■ Amount of refrigerant to be charged

Refrigerant for extended pipes (field piping) is not factory-charged to the heat source unit. Add an appropriate amount of refrigerant for each pipe on site.

Record the size of each liquid pipe and the amount of refrigerant that was charged on the heat source unit for future reference.

■ Calculating the amount of refrigerant to be charged

- The amount of refrigerant to be charged is calculated with the size of the on-site-installed liquid pipes and their length.
- Calculate the amount of refrigerant to be charged according to the formula below.
- Round up the calculation result to the nearest 0.1kg. (i.e., 16.08 kg = 16.1 kg)

<Amount of refrigerant to be charged>

■ Calculating the amount of refrigerant to be charged

Total length of ø19.05 liquid pipe x 0.29	+	Total length of ø15.88 liquid pipe x 0.2	+	Total length of ø12.7 liquid pipe x 0.12	+	Total length of ø9.52 liquid pipe x 0.06	+	Total length of ø6.35 liquid pipe x 0.024	+
(m)x0.29(kg/m)		(m)x0.2(kg/m)		(m)x0.12(kg/m)		(m)x0.06(kg/m)		(m)x0.024(kg/m)	

Total capacity of connected indoor units	Charged amount
~80	2.0kg
81~160	2.5kg
161~330	3.0kg
331~390	3.5kg
391~480	4.5kg
481~630	5.0kg
631~710	6.0kg
711~800	8.0kg
801~890	9.0kg
891~1070	10.0kg
1071~1250	12.0kg
1251~	14.0kg

■ Amount of factory-charged refrigerant

Heat source unit model	Charged amount
P200 model	5.0kg
P250 model	
P300 model	

■ Sample calculation

		Indoor		
A : ø9.52	3m	1:P250	a : ø9.52	15m
B : ø12.70	2m	2:P200	b : ø9.52	15m
C : ø19.05	2m	3:P80	c : ø9.52	5m
D : ø15.88	1m	4:P71	d : ø9.52	5m
E : ø19.05	40m	5:P140	e : ø9.52	5m
F : ø15.88	10m	6:P125	f : ø9.52	5m
G : ø12.70	5m	7:P63	g : ø9.52	5m
I : ø9.52	5m	8:P25	i : ø6.35	5m
J : ø9.52	30m			
K : ø9.52	5m			
M : ø9.52	5m			

Total length for each pipe size :	ø19.05	C+E=42
	ø15.88	D+F=1+10=11m
	ø12.70	B+G=2+5=7m
	ø9.52	A+I+J+K+M+a+b+c+d+e+f+g=3+5+30+5+5+15+15+5+5+5+5+5=103m
	ø6.35	i=5m
This yields the following result :		=40x0.29+11x0.2+7x0.12+103x0.06+5x0.024+5
		=26.52kg
		≒26.6kg

12. Outdoor Installation

12-1. Requirement on installation site

1. No direct thermal radiation to the unit.
2. No possibility of annoying the neighbors by the sound of the unit.
3. Avoid the sites where strong winds blow.
4. With strength to bear the weight of the unit.
5. Drain flow from the unit is cared at heating mode.
6. Enough space for installation and service as shown at 12-2.
7. Avoid the sites where acidic solutions or chemical sprays (sulfur series) are used frequently.
8. The unit should be secure from combustible gas, oil, steam, chemical gas like acidic solution, sulfur gas and so on.

12-2. Spacing

In case of single installation, 600mm or more of back space as front space makes easier access when servicing the unit from rear side.

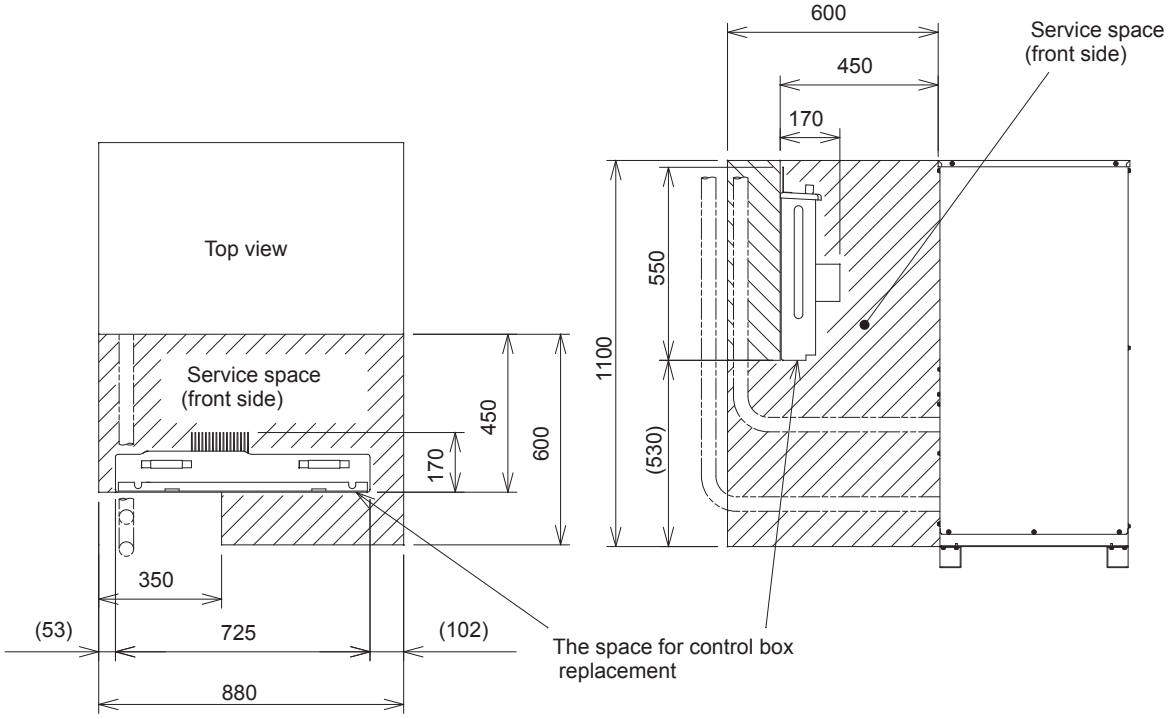

12-3. Piping direction

<Model : PQHY, PQRY-P-YHM-A(-BS)>

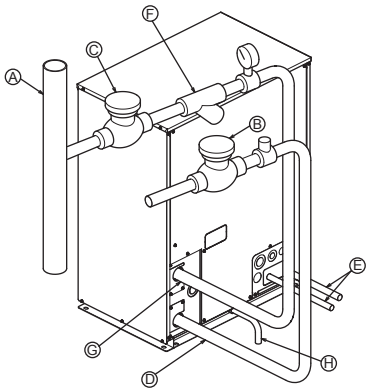

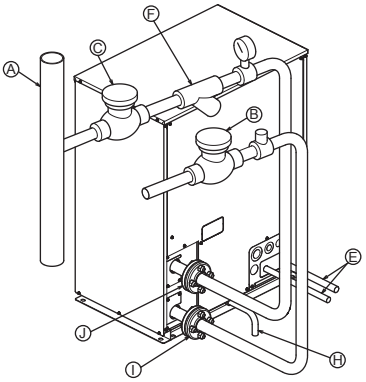

Ⓐ Main circulating water pipe
Ⓑ Shutoff valve
Ⓒ Shutoff valve
Ⓓ Water outlet (lower)
Ⓔ Refrigerant pipes
Ⓕ Y-type strainer
Ⓖ Water inlet (upper)
Ⓗ Drain pipe
Ⓘ Water outlet flange (lower)
Ⓙ Water intlet flange (upper)

1. Insulation installation

With City Multi WY/ WR2 Series piping, as long as the temperature range of the circulating water is kept to average temperatures year-round (29.4°C[85°F] in the summer, 21.1°C[70°F] in the winter), there is no need to insulate or otherwise protect indoor piping from exposure. You should use insulation in the following situations:

- Any heat source piping.
- Indoor piping in cold-weather regions where frozen pipes are a problem.
- When air coming from the outside causes condensation to form on piping.
- Any drainage piping.

2. Water processing and water quality control

To preserve water quality, use the closed type of cooling tower for WY/ WR2. When the circulating water quality is poor, the water heat exchanger can develop scales, leading to a reduction in heat-exchange power and possible corrosion of the heat exchanger. Please pay careful attention to water processing and water quality control when installing the water circulation system.

- Removal of foreign objects or impurities within the pipes.
  During installation, be careful that foreign objects, such as welding fragments, sealant particles, or rust, do not enter the pipes.
- Water Quality Processing
  ① Depending on the quality of the cold-temperature water used in the air conditioner, the copper piping of the heat exchanger may become corroded. We recommend regular water quality processing.
  Cold water circulation systems using open heat storage tanks are particularly prone to corrosion.
  When using an open-type heat storage tank, install a water-to-water heat exchanger, and use a closed-loop circuit on the air conditioner side. If a water supply tank is installed, keep contact with air to a minimum, and keep the level of dissolved oxygen in the water no higher than 1mg/ℓ.
  ② Water quality standard

Items		Lower mid-range temperature water system		Tendency	
		Recirculating water [20<T<60°C] [68<T<140°F]	Make-up water	Corrosive	Scale-forming
Standard items	pH (25°C)[77°F]	7.0 ~ 8.0	7.0 ~ 8.0	○	○
	Electric conductivity (mS/m) (25°C)[77°F] (μS/cm) (25°C)[77°F]	30 or less [300 or less]	30 or less [300 or less]	○	○
	Chloride ion (mg Cl^-/ℓ)	50 or less	50 or less	○	
	Sulfate ion (mg SO_4^{2-}/ℓ)	50 or less	50 or less	○	
	Acid consumption (pH4.8) (mg $CaCO_3$/ℓ)	50 or less	50 or less		○
	Total hardness (mg $CaCO_3$/ℓ)	70 or less	70 or less		○
	Calcium hardness (mg $CaCO_3$/ℓ)	50 or less	50 or less		○
	Ionic silica (mg SiO_2/ℓ)	30 or less	30 or less		○
Refer-ence items	Iron (mg Fe/ℓ)	1.0 or less	0.3 or less	○	○
	Copper (mg Cu/ℓ)	1.0 or less	0.1 or less	○	
	Sulfide ion (mg S^{2-}/ℓ)	not to be detected	not to be detected	○	
	Ammonium ion (mg NH_4^+/ℓ)	0.3 or less	0.1 or less	○	
	Residual chlorine (mg Cl/ℓ)	0.25 or less	0.3 or less	○	
	Free carbon dioxide (mg CO_2/ℓ)	0.4 or less	4.0 or less	○	
	Ryzner stability index	–	–	○	○

Reference : Guideline of Water Quality for Refrigeration and Air Conditioning Equipment. (JRA GL02E-1994)

③ Please consult with a water quality control specialist about water quality control methods and water quality calculations before using anti-corrosive solutions for water quality management.
④ When replacing a previously installed air conditioning device (even when only the heat exchanger is being replaced), first conduct a water quality analysis and check for possible corrosion.
Corrosion can occur in cold-water systems even if there has been no prior signs of corrosion. If the water quality level has dropped, please adjust water quality sufficiently before replacing the unit.

13. Caution for refrigerant leakage

The installer and/or air conditioning system specialist shall secure safety against refrigerant leakage according to local regulations or standards. The following standard may be applicable if no local regulation or standard is available.

13-1. Refrigerant property

R410A refrigerant is harmless and incombustible. The R410A is heavier than the indoor air in density. Leakage of the refrigerant in a room has possibility to lead to a hypoxia situation. Therefore, the Critial concentration specified below shall not be exceeded even if the leakage happens.

- **Critical concentration**

Critical concentration hereby is the refrigerant concentration in which no human body would be hurt if immediate measures can be taken when refrigerant leakage happens.

Critical concentration of R410A: 0.30kg/m^3
(The weight of refrigeration gas per 1 m^3 air conditioning space.);
* The Critical concentration is subject to ISO5149, EN378-1.

For the CITY MULTI system, the concentration of refrigerant leaked should not have a chance to exceed the Critical concentration in any situntion.

13-2. Confirm the Critical concentration and take countermeasure

The maximum refrigerant leakage concentration (Rmax) is defined as the result of the possible maximum refrigerant weight (Wmax) leaked into a room divided by its room capacity (V). It is referable to Fig. 13-1. The refrigerant of Heat source unit here includes its original charge and additional charge at the site.
The additional charge is calculated according to the refrigerant charging calculation of each kind of Heat source unit, and shall not be over charged at the site. Procedure 13-2-1~3 tells how to confirm maximum refrigerant leakage concentration (Rmax) and how to take countermeasures against a possible leakage.

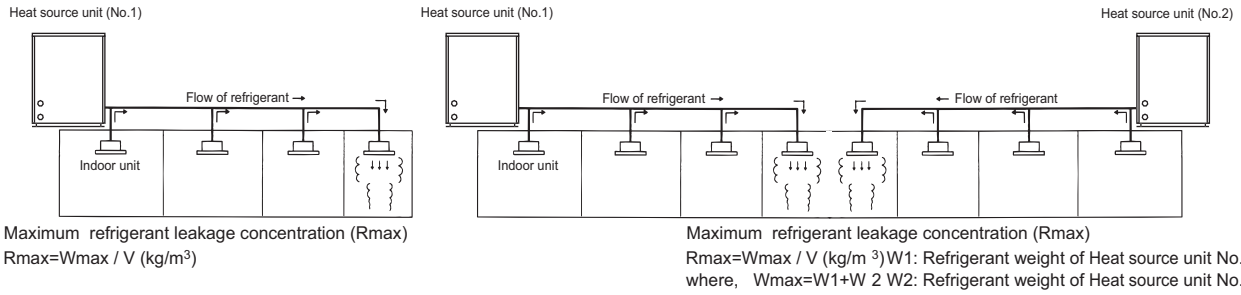

Fig. 13-1 The maximum refrigerant leakage concentration

13-2-1. Find the room capacity (V),
If a room having total opening area more than 0.15% of the floor area at a low position with another room/space, the two rooms/space are considered as one. The total space shall be added up.

13-2-2. Find the possible maximum leakage (Wmax) in the room. If a room has Indoor unit(s) from more than 1 Heat source unit, add up the refrigerant of the Heat source units.

13-2-3. Divide (Wmax) by (V) to get the maximum refrigerant leakage concentration (Rmax).

13-2-4. Find if there is any room in which the maximum refrigerant leakage concentration (Rmax) is over 0.30kg/m^3.
If no, then the CITY MULTI is safe against refrigerant leakage.
If yes, following countermeasure is recommended to do at site.
Countermeasure 1: Let-out (making V bigger)
Design an opening of more than 0.15% of the floor area at a low position of the wall to let out the refrigerant whenever leaked.
e.g. make the upper and lower seams of door big enough.
Countermeasure 2: Smaller total charge (making Wmax smaller)
e.g. Avoid connecting more than 1 Heat source unit to one room.
e.g. Using smaller model size but more Heat source units.
e.g. Shorten the refrigerant piping as much as possible.
Countermeasure 3: Fresh air in from the ceiling (Ventilation)
As the density of the refrigerant is bigger than that of the air. Fresh air supply from the ceiling is better than air exhausting from the ceiling. Fresh air supply solution refers to Fig. 13-2~4.

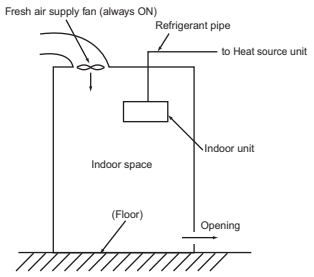

Fig.13-2. Fresh air supply always ON

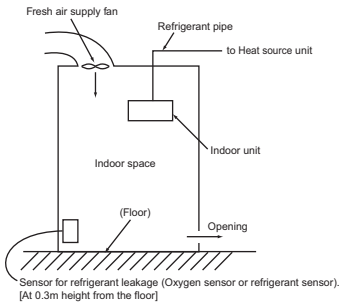

Fig.13-3. Fresh air supply upon sensor action

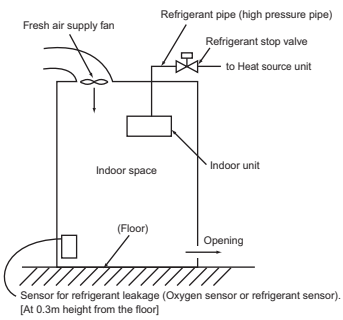

Fig.13-4. Fresh air supply and refrigerant shut-off upon sensor action

Note 1. Countermeasure 3 should be done in a proper way in which the fresh air supply shall be on whenever the leakage happens.
Note 2. In principle, MITSUBISHI ELECTRIC requires proper piping design, installation and air-tight testing after installation to avoid leakage happening.
In the area should earthquake happen, anti-vibration measures should be fully considered.
The piping should consider the extension due to the temperature variation.

14-1. System component

CITY MULTI system can be monitored or controlled with signal to/from the outside as every control board of Indoor unit or heat source unit has input/output signal connectors. Independent control to the individual Indoor or heat source can be carried out by using these connectors. Yet, for large-scale control, MELANS would be much easier. When using input/output connectors, a dedicated adapter (optional part) and a relay circuit needed to be prepared by the site.
Following are some typical example.

Table 4-1. Control can be achieved by using heat source input/output connectors.

Function	Usage	Using connector PQHY	Using connector PQRY	Signal	Option
Demand	Prohibiting cooling/heating operation (thermo OFF) by an external input to the heat source unit. * It can be used as the demand control for each refrigerant system.	CN3D	CN3D	Input (level-signal)	Adapter for external input (PAC-SC36NA-E)
Low noise mode	Performs a low noise operation of the heat source unit by an external input to the heat source unit. * It can be used as the low noise operation device for each refrigerant system.				
Pump Interlock signal input	Forces the heat source unit to stop operation by receiving contact signals from the pump interlock circuit	TB8	TB8		
Auto-changeover	Cooling/heating operation can be changed by an external input to the heat source unit.	CN3N	-		Adapter for external output (PAC-SC37SA-E)
Operation status of the compressor	How to extract signals from the heat source unit. * It can be used as an operation status display device. * It can be used for an interlock operation with external devices.	CN51	CN51	Output (level-signal)	
Error status					
Operation ON signal		TB8	TB8		

*1 For details, refer to 1) through 4) shown below.
*2 Low noise mode is valid when Dip SW4-4 on the heat source unit is set to OFF. When DIP SW4-4 is set to ON, 4 levels of on-DEMAND are possible, using different configurations of low noise mode input and DEMAND input settings.
When 2 or more heat source units exist in one refrigerant circuit system, 8 levels of on-DEMAND are possible. When 3 heat source units exist in one refrigerant circuit system, 12 levels of on-DEMAND are possible.
*3 For detailed drawing, refer to "4-4. heat source unit input/output connector".

1) SW4-4: OFF (Compressor ON/OFF, Low noise mode)

CN3D 1-3P	2-level of on-Demand *1
Open	100%(No Demand)
Short-circuit	0%

CN3D 1-2P	Low noise mode *2
Open	OFF
Short-circuit	ON

*1 When SW4-4 on the heat source unit in one refrigerant circuit system is set to ON (4 levels or 8 levels or 12 levels of on- DEMAND), this function cannot be used.
*2 This function and the 4 levels or 8 levels on-DEMAND function can be used together. Input the order to CN3D 1-2P on the heat source unit whose SW4-4 is set to OFF.

2) When SW4-4 on one heat source unit in one refrigerant circuit system is set to ON (4 levels of on-DEMAND) (*3)

	CN3D 1-2P	
CN3D 1-3P	Open	Short-circuit
Open	100% (No DEMAND)	75%
Short-circuit	0%	50%

Note the following steps to be taken when using STEP DEMAND.
Example: When switching from 100% to 50%

Steps in DEMAND level setting						
	<WRONG>	100%	→	0%	→	50%
	<CORRECT>	100%	→	75%	→	50%

If the demand settings are switched in the wrong order listed as the wrong example above, the unit may go into thermo OFF mode.
The percentage of the DEMAND listed in the table above is an approximate value based on the compressor volume and does not necessarily correspond with the capacity.
This function and the Low noise mode function cannot be used together.

3) When SW4-4 on the two heat source units in one refrigerant circuit system is set to ON (8 levels of on-DEMAND) (*3,*4)

8 levels of on-DEMAND		No.2 CN3D				
		1-2P	Open		Short-circuit	
No.1 CN3D	1-2P	1-3P	Open	Short-circuit	Open	Short-circuit
	Open	Open	100% (No DEMAND)	50%	88%	75%
		Short-circuit	50%	0%	38%	25%
	Short-circuit	Open	88%	38%	75%	63%
		Short-circuit	75%	25%	63%	50%

4) When SW4-4 on the all heat source units in one refrigerant circuit system is set to ON (12 levels of on-DEMAND) (*4)

12 levels of on-DEMAND	No.2 CN3D	1-2P	Open							
		1-3P	Open				Short-circuit			
	No.3 CN3D	1-2P	Open		Short-circuit		Open		Short-circuit	
No.1 CN3D	1-2P	1-3P	Open	Short-circuit	Open	Short-circuit	Open	Short-circuit	Open	Short-circuit
	Open	Open	100%	67%	92%	84%	67%	34%	59%	50%
		Short-circuit	67%	34%	59%	50%	34%	0%	25%	17%
	Short-circuit	Open	92%	59%	84%	75%	59%	25%	50%	42%
		Short-circuit	84%	50%	75%	67%	50%	17%	42%	34%

12 levels of on-DEMAND	No.2 CN3D	1-2P	Short-circuit							
		1-3P	Open				Short-circuit			
	No.3 CN3D	1-2P	Open		Short-circuit		Open		Short-circuit	
No.1 CN3D	1-2P	1-3P	Open	Short-circuit	Open	Short-circuit	Open	Short-circuit	Open	Short-circuit
	Open	Open	92%	59%	84%	75%	84%	50%	75%	67%
		Short-circuit	59%	25%	50%	42%	50%	17%	42%	34%
	Short-circuit	Open	84%	50%	75%	67%	75%	42%	67%	59%
		Short-circuit	75%	42%	67%	59%	67%	34%	59%	50%

*3 Input the order to CN3D on the heat source unit whose SW4-4 is set to ON.
*4 CN3D of No. 1, 2, 3 can be selected arbitrary with the heat source unit whose SW4-4 is set to ON.

Table 4-2. Control can be achieved by using Indoor input/output connectors.

Function	Usage	Using connector	Signal
Remote/Local switching *1 ON/OFF *2*3	Indoor group can be controlled ON/OFF by an ON/OFF switching or contact input to the connector of the head Indoor in an Indoor group. It can be interlocked with timer, door, window, or other equipment to "Force stopping"	CN32	Input (level-signal)
ON/OFF *2*3	Indoor group can be controlled ON/OFF by an external pulse signal input to the connector of the head Indoor in an Indoor group.	CN51	Input (pulse-signal)
Demand	Indoor group can be controlled ON/OFF by an ON/OFF switching or contact input to the connector of every Indoor in an Indoor group.	CN52	Input (pulse-signal)
Monitoring ON/OFF state	Signal output from a head Indoor unit, presenting its Indoor group.	CN51	Output
Monitoring heating state	It can be used for monitoring or interlock with other equipment purpose and so on.	CN52	
Monitoring cooling/drying state		CN52	
Monitoring Error state Monitoring Thermo-OFF(fan) state	Signal output from every Indoor unit, for monitoring Error or Thermo-off (fan) state. It can be used for monitoring or interlock with other equipment purpose and so on.	CN51 CN52	Output

*1. When switching to Remote, control at Local remote controller will NOT be effective, but the "CENTRALLY CONTROLLED" is displayed.
*2. MA or ME remote controller is needed for this function.
*3. If using ON/OFF input function, Automatic-address-start-up can not be performed to start-up the system at commissioning.
*4. If CITY MULTI use GB-50A/AG-150A and PLC software to control the Indoor unit via its external input/output connectors, Dip Switch 1-9 and Dip Switch 1-10 should be set to ON.
In this case, the input/output connectors act as normal connectors, functions mentioned at Table 4-2 are no more available.
Details are available at the PLC software Instruction Manual.

Table 4-3. ON/OFF control to each Indoor unit (group) by using Dip Switch 9 and 10 (SW1-9, SW1-10) of the Indoor unit.

Function	Operation on Indoor units	Setting Dip Switch *1*4	
		1-9	1-10
Auto ON	All indoor units will turn ON and automatically resume to its previous mode after 5 minutes from power recovery.	OFF	ON
Auto recovery	Indoor unit recovers to its previous state (ON/OFF, mode) after 5 minutes from power recovery.	ON	OFF
All OFF	Forced stopping regardless of Indoor units' state.	OFF	OFF

*1. The Dip Switch setting should be carried out on every Indoor unit in the group.
*2. Heat source unit's power supply should NOT be cut. Otherwise, power supply to case heater of the compressor would be cut too, which may cause damage to the compressor.
*3. Above method can not be applied to the power ON/OFF of the drain pump and humidifier equipment.
*4. If CITY MULTI use GB-50A/AG-150A and PLC software to control the Indoor unit via its external input/output connectors, Dip Switch 1-9 and Dip Switch 1-10 should be set to ON.
In this case, the input/output connectors act as normal connectors, functions mentioned at Table 4-3 are no more available.

■ System example

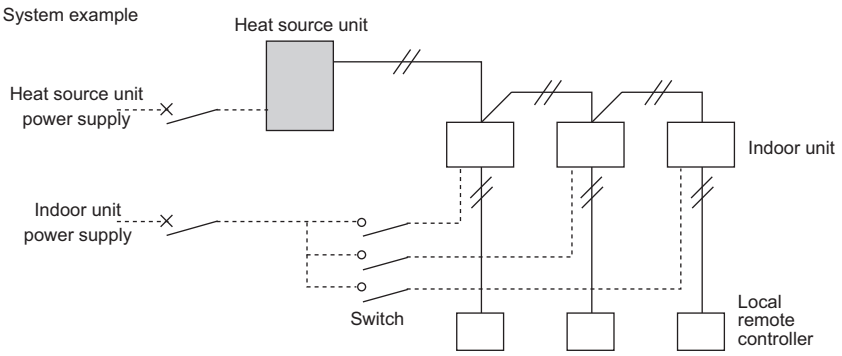

Restart of the CITY MULTI needs to be careful. When no power supply to the heat source unit, no power supply to the compressor case heater too. The compressor needed to be warmed up before running. When using above functions, power supply to the heat source unit should be ensured.

Table 4-4. How to use Remote/Local switching connector CN32

State	Local remote controller display and operation	CN32-SW-1 for Local/Remote control switching	CN32-SW-2 for Remote "ON/OFF" operation
Local remote controller control	Operation is permitted	OFF	OFF
Remote STOP	"CENTRALLY CONTROLLED" flashing, "ON/OFF" at local remote controller is not possible.	ON	OFF
Remote START	"CENTRALLY CONTROLLED" flashing, "ON/OFF" at local remote controller is not possible.	ON	ON

* For details refer to CN32 in section “4-5. Indoor unit “-E” type input/output connector”.

Table 4-5. Limitations to combining system controls

	Description		Control combining distant/local	Pulse ON/OFF	Power ON/OFF	Automatic recover
1	Control combining distant/local	CN32	-	×*1	×*1	×*1
2	Pulse ON/OFF	CN51		-	O	O
3	HA ON/OFF(JEMA)	CN51			O	O
4	Power ON/OFF	-			-	×
5	Automatic recover	-				-

*1. Pulse ON/OFF, power ON/OFF and automatic recover can only be used when the remote/local setting CN32 is set to local.
Therefore, always avoid this function when combining control.

14-2. Heat source unit input/output connector

⚠ Caution:	1.Wiring should be covered by insulation tube with supplementary insulation. 2.Use relays or switches with IEC or equivalent standard. 3.The electric strength between accessible parts and control circuit should have 2750V or more.

14-2-1. Output

• State (CN51)

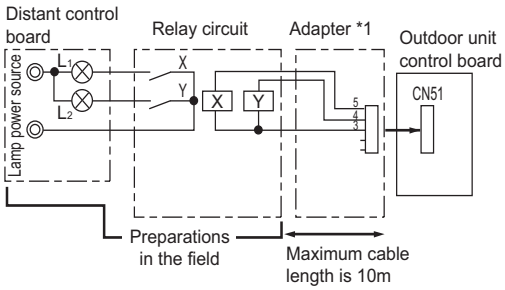

L1 : Heat source unit error display lamp
L2 : Compressor operation lamp (compressor running state)
X, Y : Relay (coil =<0.9W : 12VDC)

*1. Optional part : PAC-SC37SA-E or field supply.

14-2-2. Input

(1) Step demand and Low noise mode (CN3D)

For details, refer to "Table 4-1".

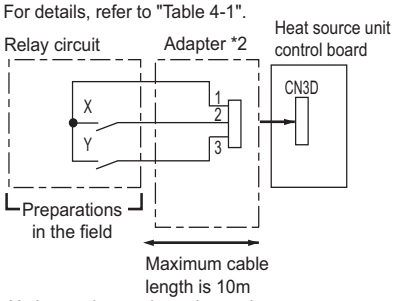

X : Low noise mode or demand
Y : Demand
X,Y : Relay Contact rating voltage >= 15VDC
Contact rating current >= 0.1A
Minimum appicable load =< 1mA at DC
*2. Optional part : PAC-SC36NA-E or field supply.

(2) Low noise mode (CN3D + DipSW4-4 OFF)

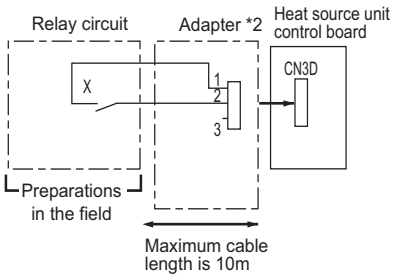

X : Relay Contact rating voltage >= 15VDC
Contact rating current >= 0.1A
Minimum applicable load =< 1mA at DC
*2. Optional part : PAC-SC36NA-E or field supply.

Low noise mode : The sound pressure level is reduced by controlling the maximum fan frequency and compressor frequency.

-Note-
The sound pressure level can not be reduced, when neither the fan frequency nor the compressor frequency are maximum.

(3) Autochangeover (CN3N) (WR2 excluded)

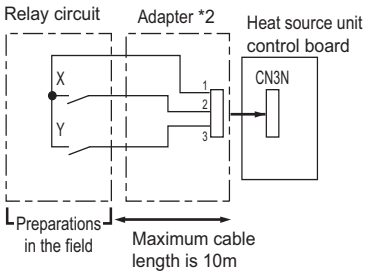

X : Cooling / Heating
Y : Validity / Invalidity of X
X,Y : Relay Contact rating voltage >= 15VDC
Contact rating current >= 0.1A
Minimum applicable load =< 1mA at DC
*2. Optional part : PAC-SC36NA-E or field supply.

		X	
		OFF	ON
Y	OFF	Normal	
	ON	Cooling	Heating

(4) Operation ON signal (TB8)

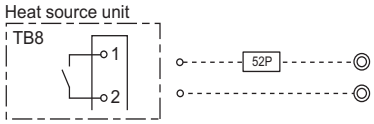

X : Relay (Contact rating 200VAC 1A)
52P : Pump contactor

(5) Pump Interlock signal input (TB8)

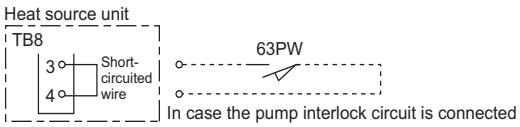

When connecting the pump interlock circuit to terminals 3 and 4 on TB8, remove the short-circuited wire.
63PW : Pressure switch (Contact: Minimum applied load 5mA)

DATA BOOK PQHY-P650YSHM-A
PQHY-P700YSHM-A
PQHY-P750YSHM-A
PQHY-P800YSHM-A
PQHY-P850YSHM-A
PQHY-P900YSHM-A

MITSUBISHI ELECTRIC CORPORATION
HEAD OFFICE: TOKYO BLDG., 2-7-3, MARUNOUCHI, CHIYODA-KU, TOKYO 100-8310, JAPAN

Issued in Sep. 2009 MEE09K024
Printed in Japan

New publication effective Sep. 2009.
Specifications subject to change without notice.