Changes for the Better

MITSUBISHI ELECTRIC

AIR CONDITIONING SYSTEMS

Model PUHY-P-Y(S)HM-A
PFAV-P-VM-E(-F)

DATA BOOK

Contents

I. General Cautions

1. Indoor Unit Line-up

Model type		Standard type		
Model size		P250	P500	P750
Nominal HP		10HP	20HP	30HP
Nominal cooling cap. *1	kW	25.0	50.0	71.0
Nominal heating cap. *2	kW	28.0	56.0	80.0
Floor standing **PFAV-P-VM-E**				
Connectable outdoor unit type		PUHY-P250YHM-A	PUHY-P500YSHM-A	PUHY-P750YSHM-A

*Nominal conditions *1,*2 are referable at the Specification sheet.

Model type		Fresh air intake type		
Model size		P300	P600	P900
Nominal HP		10HP	20HP	30HP
Nominal cooling cap. *1	kW	28.0	56.0	80.0
Nominal heating cap. *2	kW	26.5	50.0	71.0
Floor standing **PFAV-P-VM-E-F**				
Connectable outdoor unit type		PUHY-P250YHM-A	PUHY-P500YSHM-A	PUHY-P750YSHM-A

*Nominal conditions *1,*2 are referable at the Specification sheet.

2. Temperature range

■ Standard type

	Cooling	Heating
Indoor temperature	Wet-bulb temperature 10~25˚C [50~77˚F] (Note 1)	Dry-bulb temperature 15~28˚C [59~82˚F]
Outdoor temperature	Dry-bulb temperature -5~43˚C [23~109˚F]	Wet-bulb temperature -20~15.5˚C [-4~60˚F]

Note 1. If units are operated for a long time at the dew point temperature of 23˚C [73˚F] or more, condensate may collect and drip from the indoor units. If the units are operated under such conditions, cover the entire surface of all indoor units with insulating materials with a thickness of between 0 and 20 mm [13/16 in.] to prevent condensate from collecting.

■ Fresh air intake type

	Cooling	Heating (Note 2)
Indoor temperature	Wet-bulb temperature 15~35˚C [50~95˚F]	Dry-bulb temperature 0~20˚C [32~68˚F]
Outdoor temperature	Dry-bulb temperature 20~43˚C [68~109˚F]	Wet-bulb temperature -4~15.5˚C [24~60˚F]

Note 2. If the indoor intake air is pretreated to 0˚C in the primary treatment, the unit can be operated in the outdoor intake air temperature range of between -20 and 15.5˚CWB [-4 and 60˚FWB].

3. Notes on selecting equipments

(1) Notes on using the Fresh Air Intake type units

①Fresh air intake type indoor units supply pretreated outside air into the room. This type of units are not designed to handle internal thermal load. Use other types of air conditioning units (e.g., CITY MULTI system) that are capable of handling internal thermal load in combination with the Fresh Air Intake type units.

<Fresh Air Intake type sample installation>

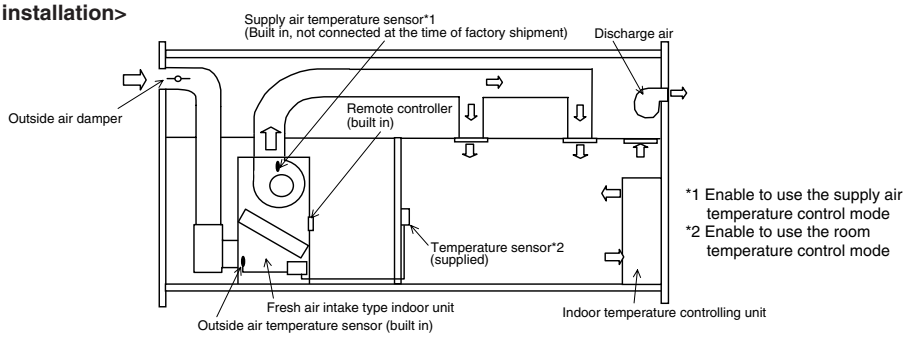

②The control mode is selectable between room temperature control and supply air temperature control. The default mode is room temperature control. Install the supplied thermistor in a location that allows the sensor to measure the representative room temperature.

③

Common items	･Fresh air intake type units are intended to be used in an environment at a temperature of 0˚CDB [32˚FDB] or above. If the units are operated in the fan mode at the temperature below 0˚C[32˚F], condensation may form on the panel under certain conditions. Use caution so that the condensation will not drip on appliances around the unit. ･The unit may be forced to operate in the heating mode to prevent cold draft when the return air temperature (outside air temperature sensor reading) reaches 5˚C[41˚F] or below. The fan will stop during the defrost cycle and when there is a problem with the entire refrigerant systems. The fan can be set to operate in the conditions above by making certain switch settings if a sudden supply of cold air into the room during the heating season will not be a problem. ･Note that untreated outside air may be delivered directly into the room upon Thermo-OFF. Use extra caution when the outside temperature is low. Direct exposure to outdoor air may have an adverse effect on health or cause food spoilage. ･Fresh air intake type units are not equipped with a dehumidifying function. Take appropriate measures to keep condensation from forming on the supply air grill and other parts that are subject to condensation. Line the supply and return air ducts with insulation to prevent condensation.
Room temperature control (factory setting)	･Install the thermistor that is supplied with the indoor unit. Check that Switch 7-2 is set to OFF. ･Install the thermistor in a location that allows the sensor to measure the representative room temperature. ･The unit will go into the forced Thermo-OFF mode when the return air dry bulb temperature (outside air temperature sensor reading) is 21˚C[70˚F] or below during cooling OR 20˚C[68˚F] or above during heating. ･The settable temperature range on the remote controller is as follows: Cooling 19 - 30˚C[66 - 86˚F]; Heating 17-28˚C[63 - 82˚F]. ･Indoor temperature and humidity can fluctuate greatly depending on the outside air load.
Supply air temperature control	･Connect the connector of the supply air temperature sensor that is built in on the indoor unit to the control board. Turn Switch 7-2 to ON. ･The unit will go into the forced Thermo-OFF mode and operate in the Fan mode when the return air dry bulb temperature (outside air temperature sensor reading) is 14˚C[57˚F] or below during cooling OR 28˚C[82˚F] or above during heating. ･Supply air temperature may fluctuate, depending on the temperature/humidity of the outside air or on other operating conditions. Units may go in and out of the Thermo-ON/OFF mode when the following conditions are met: The difference between the outside temperature and the preset temperature is less than approximately 6˚C[43˚F] due to excess capacity. They may change depending on the air flow rate and preset temperature. ･Supply air temperature normally appears on the remote controller. When the unit operation is not stable, this temperature may blink on the display and can be mistakenly interpreted as an error. If this is a problem, change the setting to suppress the temperature display. Refer to the section "How to use the remote controller" in the Instructions Manual for how to make the setting. ･The settable temperature range on the remote controller is as follows: Cooling 14 - 30˚C[57 - 86˚F]; Heating 17-28˚C[63 - 82˚F]. ･Depending on the air conditioning load, outside temperature, and due to the activation of protection functions, the desired preset temperature may not always be achieved.

④Fan control

The unit may be forced to operate in the heating mode to prevent cold draft when the return air temperature (outside air temperature sensor reading) reaches 5˚C[41˚F] or below. At the time of factory shipment, fan setting is made so that the fan will stop during the defrost cycle and when there is a problem with the entire refrigerant systems.

See below for switch settings and unit operation.

Specifications	SW	Operation		Notes
		OFF	ON	
Forced heating operation	SW1-7	·Forced heating operation disabled ·Fan stays on when there is an error. (The fan stops when there is a problem with the fan or a communication error.)	·Forced heating operation enabled ·Fan turns off when there is a problem.	When the return air temperature reaches 5˚C[41˚F] or below, the unit will be forced to operate in the heating mode to prevent cold draft regardless of the actual operation mode setting. If the return air temperature reaches 6˚C[43˚F] or above, the units will resume operation in the selected mode. The fan will stop when there is an error, regardless of the outside temperature.
Fan operation during defrost	SW3-4	·The fan turns off when the entire refrigerant system is in the defrost cycle	·The fan turns on during defrost	

*Settings in the shaded areas indicate factory settings.

*Operating the fan during the defrost cycle can cause cold outside air to be delivered into the room, and it can also delay normal unit operation to be resumed after the defrost cycle is completed, both of which can greatly decrease the room temperature.

⑤Sample operation patterns (supply air temperature control)

The unit will follow the operation control pattern below at the nominal air flow rate and the preset temperature of 22˚C[72˚F]. Use it only as a guide. The range changes with the air flow rate and preset temperature.

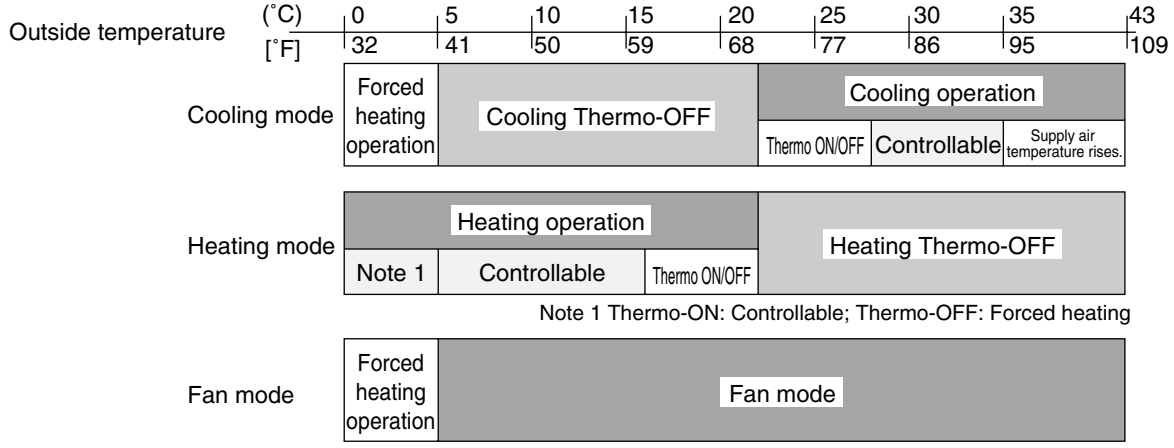

⑥Thermo-ON/OFF conditions (supply air temperature control)

<Cooling operation>

Preset temperature	14 ~ 30˚C [57 ~ 86˚F]
Thermo-OFF conditions (①, ②, or ③)	①Outside temp. < Preset temp.+0.0 ②Supply air temp. < Preset temp.-2˚C lasting for consecutive 10 minutes ③15 or more minutes after startup AND Supply air temp. < Preset temp.-5˚C
Thermo-ON conditions	Supply air temp. > Preset temp +2˚C AND Return air temp. > Preset temp.+1.5˚C, AND at least 3 minutes have passed since Thermo-OFF

<Heating operation>

Preset temperature	17 ~ 28˚C [68 ~ 82˚F]
Thermo-OFF conditions (①, ②, or ③)	①Outside temp. < Preset temp.+0.0 ②Supply air temp.> Preset temp.+5˚C lasting for consecutive 10 minutes ③15 or more minutes after startup and Supply air temp. > Preset temp.+10˚C
Thermo-ON conditions	Supply air temp. < Preset temp.-2˚C AND Return air temp. < Preset temp. -1.5˚C AND at least three minutes have passed since Thermo-OFF

Ⅱ. Indoor Unit

1. Specifications

(1) Standard type

Model Name	Indoor		PFAV-P250VM-E	PFAV-P500VM-E	PFAV-P750VM-E
	Outdoor		PUHY-P250YHM-A	PUHY-P500YSHM-A (PUHY-P250YHM-A x 2, CMY-Y100VBK2)	PUHY-P750YSHM-A (PUHY-P350YHM-A + PUHY-P400YHM-A, CMY-Y200VBK2)
System capacity	Cooling	kW	25.0 (Maximum28.0)	50.0 (Maximum56.0)	71.0 (Maximum 80.0)
	Heating	kW	28.0 (Maximum 31.5)	56.0 (Maximum 63.0)	80.0 (Maximum 90.0)
System Power input	Cooling	kW	7.46 / 7.53	17.85 / 18.84	26.33 / 27.40
	Heating	kW	8.27 / 8.34	17.00 / 17.99	23.93 / 25.00
System current	Cooling	A	14.5-13.8-13.3 / 13.4-12.8-12.3	32.3-30.7-29.6 / 32.6-31.0-29.9	48.1-45.7-44.1 / 47.5-45.1-43.5
	Heating	A	15.8-15.0-14.4 / 14.7-14.0-13.4	30.8-29.3-28.2 / 31.1-29.6-28.5	43.4-41.2-39.8 / 42.8-40.6-39.2
Power source			3-phase 4-wire 380-400-415V (50Hz / 60Hz)		
Power input		kW	0.82 / 0.89	2.37 / 3.36	4.30 / 5.37
Current		A	3.4-3.2-3.1 / 2.3-2.2-2.1	6.2-5.9-5.7 / 6.5-6.2-6.0	10.9-10.4-10.0 / 10.3-9.8-9.4
Fan	Type x Quantity		Sirocco fan x 2	Sirocco fan x 1	Sirocco fan x 1
	Airflow rate	m^3/min	90	180	260
	External static pressure	Pa	30 / 90	30 / 130	100 / 310
	Motor output	kW	2.2	5.5	7.5
Refrigerant			R410A	R410A	R410A
External finish			Galvanized steel plate (with polyester coating) MUNSELL 5Y 8 / 1 or similar		
External dimension		mm	1748(H) x 1200(W) x 485(D)	1899(H) x 1420(W) x 635(D)	1860(H) x 1750(W) x 1064(D)
Protection devices		Fan	Over current protection	Over current protection	Over current protection
Refrigerant piping diameter	Liquid pipe	mm	9.52 Brazed (12.7 for over 90m)	15.88 Brazed	19.05 Brazed
	Gas pipe	mm	22.2 Brazed	28.58 Brazed	34.93 Brazed
Refrigerant piping allowable length		m	165	165	165
Sound pressure level		dB(A)	55	59 / 62	65
Heat exchanger			Cross fin (aluminum plate fin and copper tube)		
Air filter			Synthetic fiber unwoven cloth filter		PP Honeycomb fabric filter
Net weight		kg	156	265	459
Operating temperature range	Cooling		Indoor: 10 to 25 degCWB (Outdoor: -5 to 43 degCDB)		
	Heating		Indoor: 15 to 28 degCDB (Outdoor: -20 to 15.5 degCWB)		

Note

1. Cooling / Heating capacity indicates the value at operation under the following conditions.
   (Cooling) Indoor: 27degCDB / 19degCWB, Outdoor: 35degCDB
   (Heating) Indoor: 20degCDB, Outdoor: 7degDB / 6degCWB
   Pipe length: 7.5m, Height difference: 0m
2. The sound pressure level is measured in an anechoic room.
3. Long period operation in a high temperature and humidity atmosphere (dew point of 23˚C or more) may cause condensation to form in the indoor unit.

Works not included: Installation / foundation work, electric connection work, duct work, insulation work, the power source switch and other items are not specified in the specifications.

(2) Fresh air intake type

Model Name	Indoor		PFAV-P300VM-E-F	PFAV-P600VM-E-F	PFAV-P900VM-E-F
	Outdoor		PUHY-P250YHM-A	PUHY-P500YSHM-A (PUHY-P250YHM-A x 2, CMY-Y100VBK2)	PUHY-P750YSHM-A (PUHY-P350YHM-A + PUHY-P400YHM-A, CMY-Y200VBK2)
System capacity	Cooling	kW	28.0 (Maximum 33.5)	56.0 (Maximum 67.0)	80.0 (Maximum 100.0)
	Heating	kW	26.5 (Maximum 28.0)	50.0 (Maximum 56.0)	71.0 (Maximum 80.0)
System Power input	Cooling	kW	6.73 / 6.72	14.69 / 15.05	22.54 / 22.74
	Heating	kW	7.57 / 7.56	15.43 / 15.79	21.43 / 21.63
System current	Cooling	A	12.6-11.9-11.5 / 12.2-11.5-11.1	26.1-24.9-24.0 / 26.2-25.0-24.0	40.5-38.5-37.1 / 39.6-37.6-36.2
	Heating	A	14.0-13.3-12.8 / 13.6-12.9-12.4	27.4-26.1-25.1 / 27.5-26.2-25.1	38.7-36.8-35.5 / 37.8-35.9-34.6
Power source			3-phase 4-wire 380-400-415V (50Hz / 60Hz)		
Power input		kW	0.37 / 0.36	0.90 / 1.26	1.77 / 1.97
Current		A	1.9-1.8-1.7 / 1.5-1.4-1.3	2.9-2.8-2.8 / 3.0-2.9-2.8	5.6-5.3-5.1 / 4.7-4.4-4.2
Fan	Type x Quantity		Sirocco fan x 2	Sirocco fan x 1	Sirocco fan x 1
	Airflow rate	m^3/min	45	90	120
	External static pressure	Pa	80	110 / 170	210 / 330
	Motor output	kW	1.5	2.2	3.7
Refrigerant			R410A	R410A	R410A
External finish			Galvanized steel plate (with polyester coating) MUNSELL 5Y 8 / 1 or similar		
External dimension		mm	1748(H) x 1200(W) x 485(D)	1899(H) x 1420(W) x 635(D)	1860(H) x 1750(W) x 1064(D)
Protection devices		Fan	Over current protection	Over current protection	Over current protection
Refrigerant piping diameter	Liquid pipe	mm	9.52 Brazed (12.7 for over 90m)	15.88 Brazed	19.05 Brazed
	Gas pipe	mm	22.2 Brazed	28.58 Brazed	34.93 Brazed
Refrigerant piping allowable length		m	165	165	165
Sound pressure level		dB(A)	48.5	50 / 53	57
Heat exchanger			Cross fin (aluminum plate fin and copper tube)		
Air filter			Synthetic fiber unwoven cloth filter		PP Honeycomb fabric filter
Net weight		kg	151	248	437
Operating temperature range	Cooling		Indoor: 15 to 35 degCWB (Outdoor: 20 to 43 degCDB)		
	Heating		Indoor: 0 to 20 degCDB (Outdoor: -4 to 15.5 degCWB)		

Note

1. Cooling / Heating capacity indicates the value at operation under the following conditions.
   (Cooling) Indoor,Outdoor: 33degCDB / 28degCWB
   (Heating) Indoor,Outdoor: 7degDB / 3degCWB
   Pipe length: 7.5m, Height difference: 0m
2. The sound pressure level is measured in an anechoic room.
3. The indoor intake air temperature should be kept more than 0 degC.
4. At factory setting, the fan temporary stops in defrosting. Change DIP SW for fan to operate in defrosting.
5. Indoor temperature and humidity cannnot be controlled with Fresh air intake type.

Works not included: Installation / foundation work, electric connection work, duct work, insulation work, the power source switch and other items are not specified in the specifications.

2. External dimensions

(1) Standard type

•PFAV-P250VM-E

Unit:mm

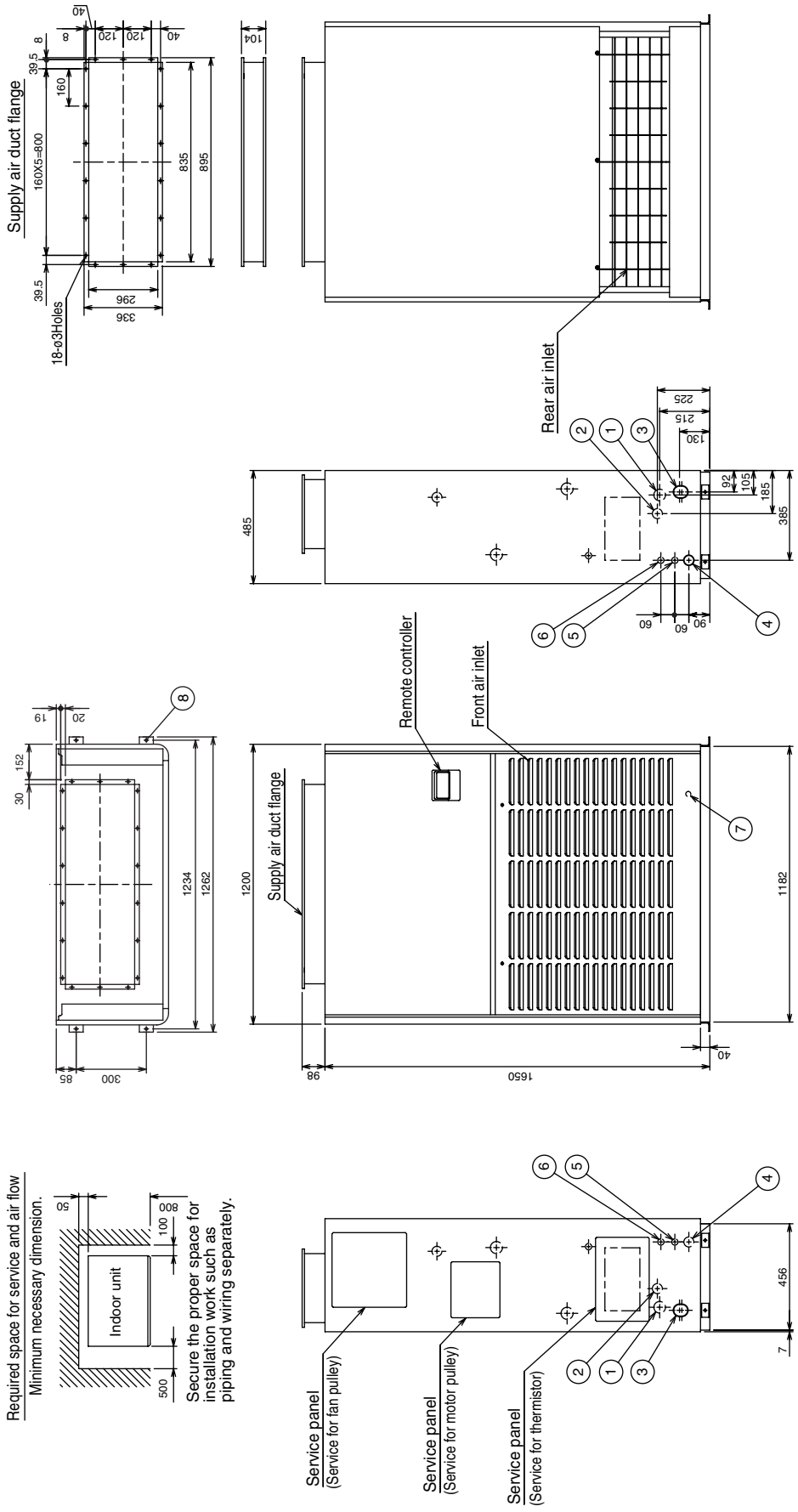

Notes 1.Be sure to wire the transmission line and power line separately.
2.When the room in which the unit is installed is airtight, the pressure in the room may become negative. This may result in problems such as the door to becoming difficult to open etc. To avoid these kinds of problems please ensure that a small amount of air is able to ventilate the room via some kind of small hole or vent.

NO.	Designation
1	Refrigerant pipe<Gas>···ø22.2 brazed
2	Refrigerant pipe<Liquid>···ø9.52 brazed
3	Drain hole·····Rc 1
4	Power supply wiring hole·····ø43
5	Wiring hole·····ø27
6	Wiring hole(The outdoor unit connection,Transmission line)·····ø27
7	Earth terminal(installed in the control box)···M5
8	For mounting anchor bolt 4-ø12 Holes

•PFAV-P500VM-E

Unit:mm

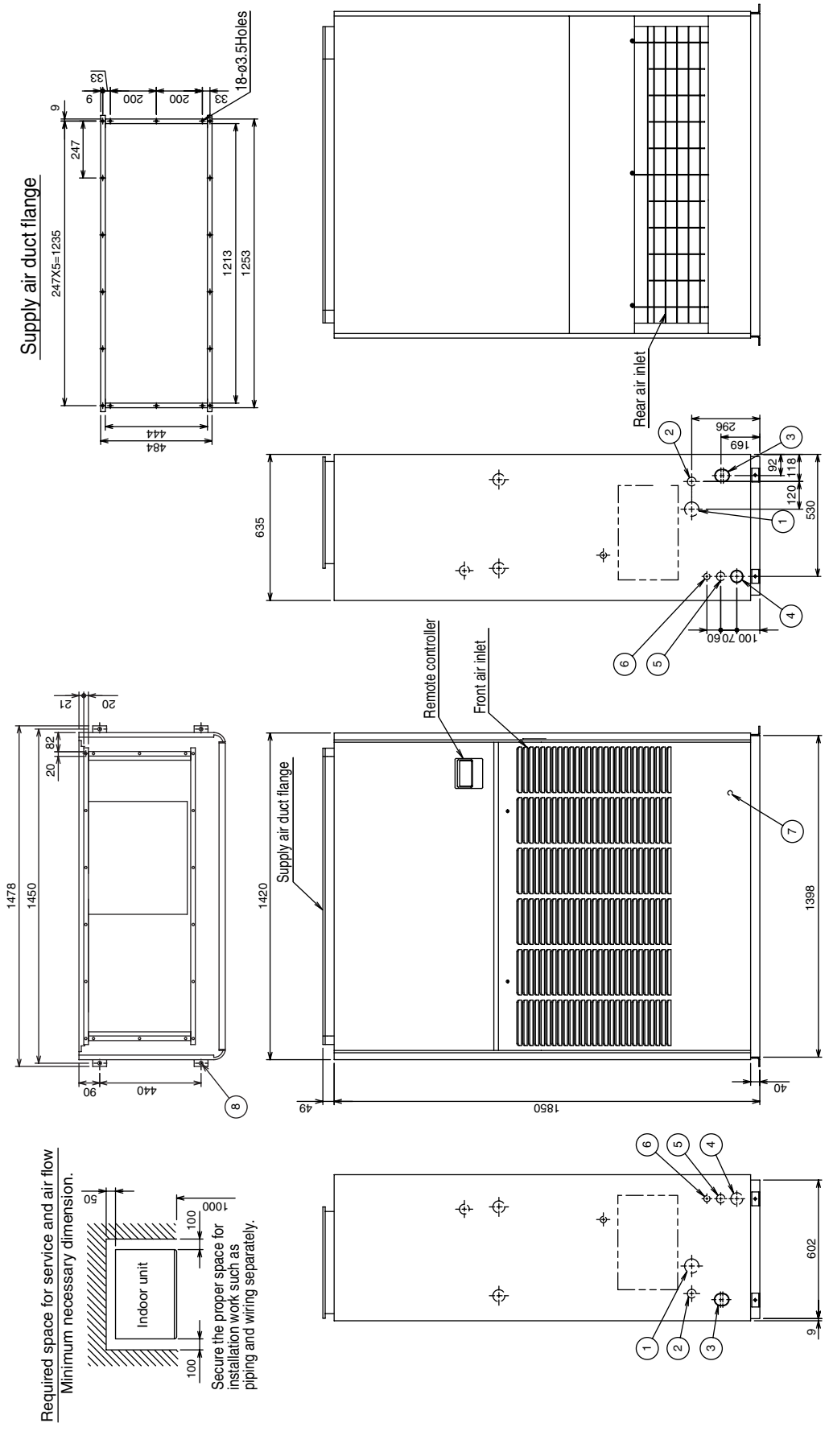

Notes 1.Be sure to wire the transmission line and power line separately.
2.When the room in which the unit is installed is airtight, the pressure in the room may become negative. This may result in problems such as the door to becoming difficult to open etc. To avoid these kinds of problems please ensure that a small amount of air is able to ventilate the room via some kind of small hole or vent.

NO.	Designation
1	Refrigerant pipe<Gas>···ø28.5 brazed
2	Refrigerant pipe<Liquid>·····ø15.88 brazed
3	Drain hole·····Rc 1 1/4
4	Power supply wiring hole···ø52
5	Wiring hole·····ø37
6	Wiring hole(The outdoor unit connection,Transmission line)···ø27
7	Earth terminal(installed in the control box)···M5
8	For mounting anchor bolt 4-ø12 Holes

•PFAV-P750VM-E

Unit:mm

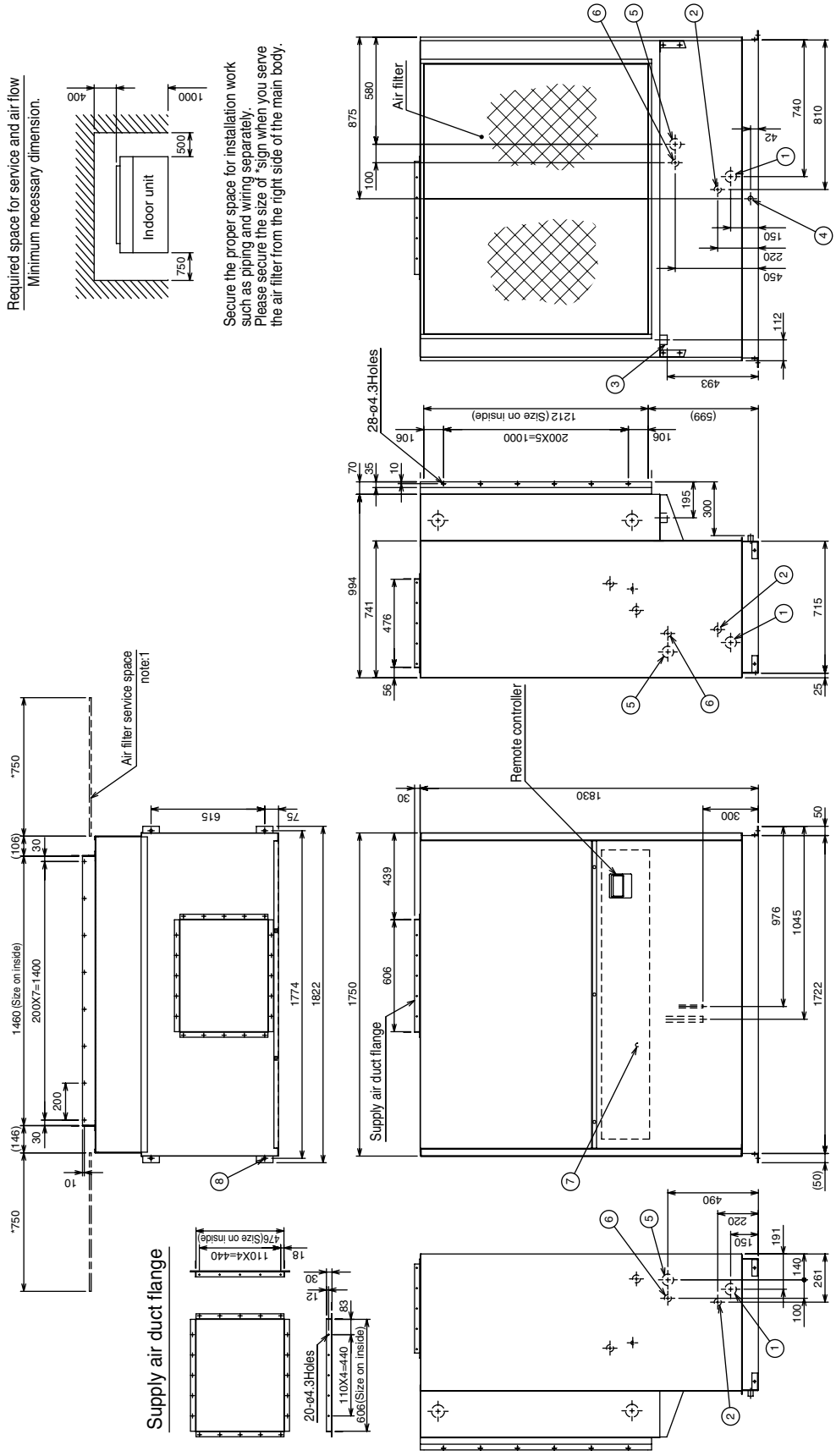

Notes 1.Please secure the size in the service space of the air filter(*sign) for a left side or a right side of the unit.
2.Be sure to wire the transmission line and power line separately.
3.When the room in which the unit is installed is airtight, the pressure in the room may become negative. This may result in problems such as the door to becoming difficult to open etc. To avoid these kinds of problems please ensure that a small amount of air is able to ventilate the room via some kind of small hole or vent.
4.Connect by using the connecting pipes that are supplied.

NO.	Designation
1	Refrigerant pipe<Gas>···ø34.93 brazed
2	Refrigerant pipe<Liquid>···ø19.05 brazed
3	Drain hole<Upper part>·····Rc 1 1/4
4	Drain hole<Lower side>·····Rc 1
5	Wiring hole·····ø62
6	Wiring hole(The outdoor unit connection,Transmission line)·····ø38
7	Earth terminal(installed in the control box)·····M5
8	For mounting anchor bolt 4-ø15 Holes

(2) Fresh air intake type

•PFAV-P300VM-E-F

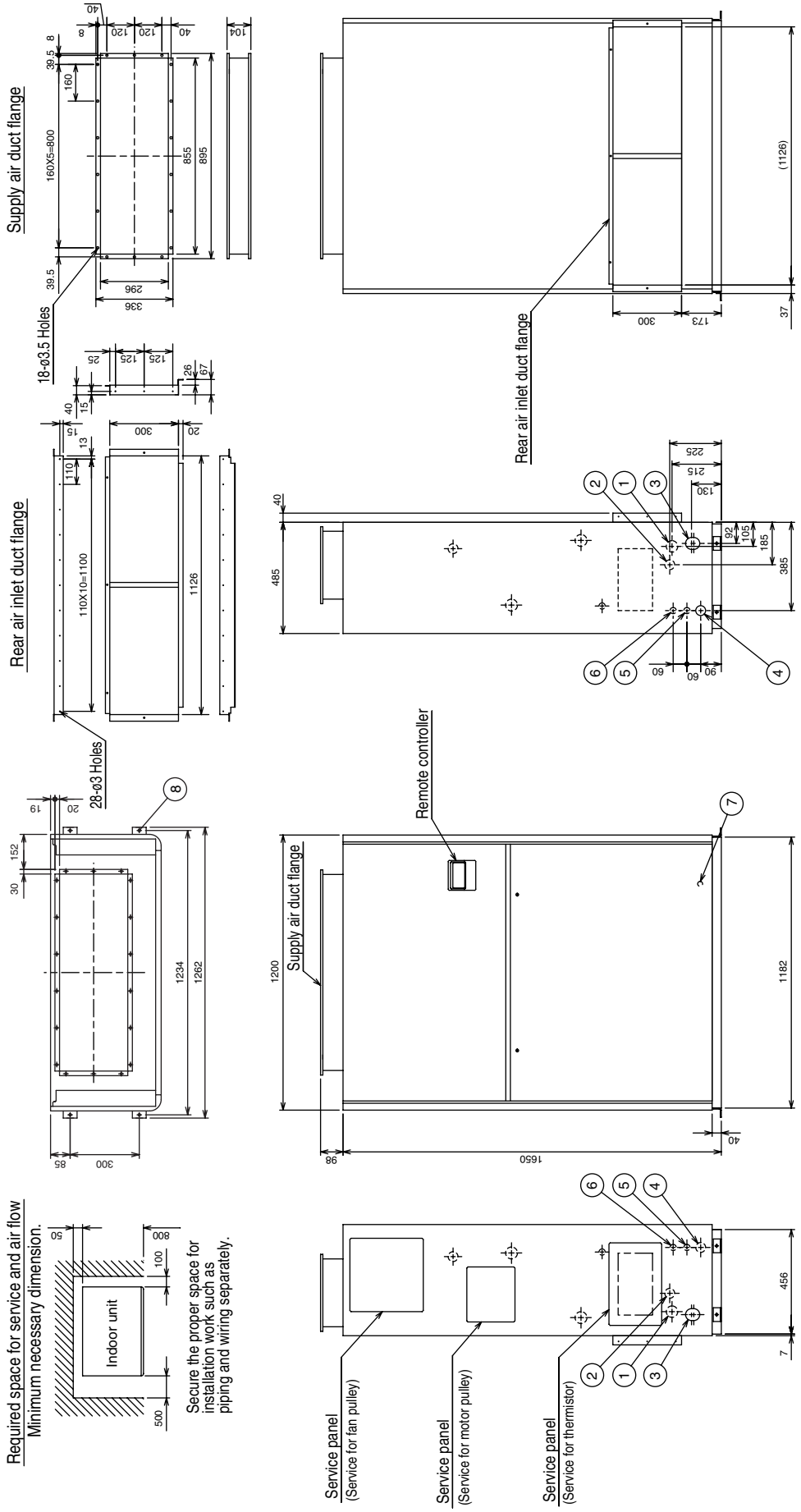

Unit:mm

Notes 1.Be sure to wire the transmission line and power line separately.
2.When the room in which the unit is installed is airtight, the pressure in the room may become negative. This may result in problems such as the door to becoming difficult to open etc. To avoid these kinds of problems please ensure that a small amount of air is able to ventilate the room via some kind of small hole or vent.

NO.	Designation
1	Refrigerant pipe<Gas>---ø22.2 brazed
2	Refrigerant pipe<Liquid>---ø9.52 brazed
3	Drain hole------Rc 1
4	Power supply wiring hole------ø43
5	Wiring hole----ø27
6	Wiring hole(The outdoor unit connection,Transmission line)-----ø27
7	Earth terminal(installed in the control box)---M5
8	For mounting anchor bolt 4-ø12 Holes

•PFAV-P600VM-E-F

Unit:mm

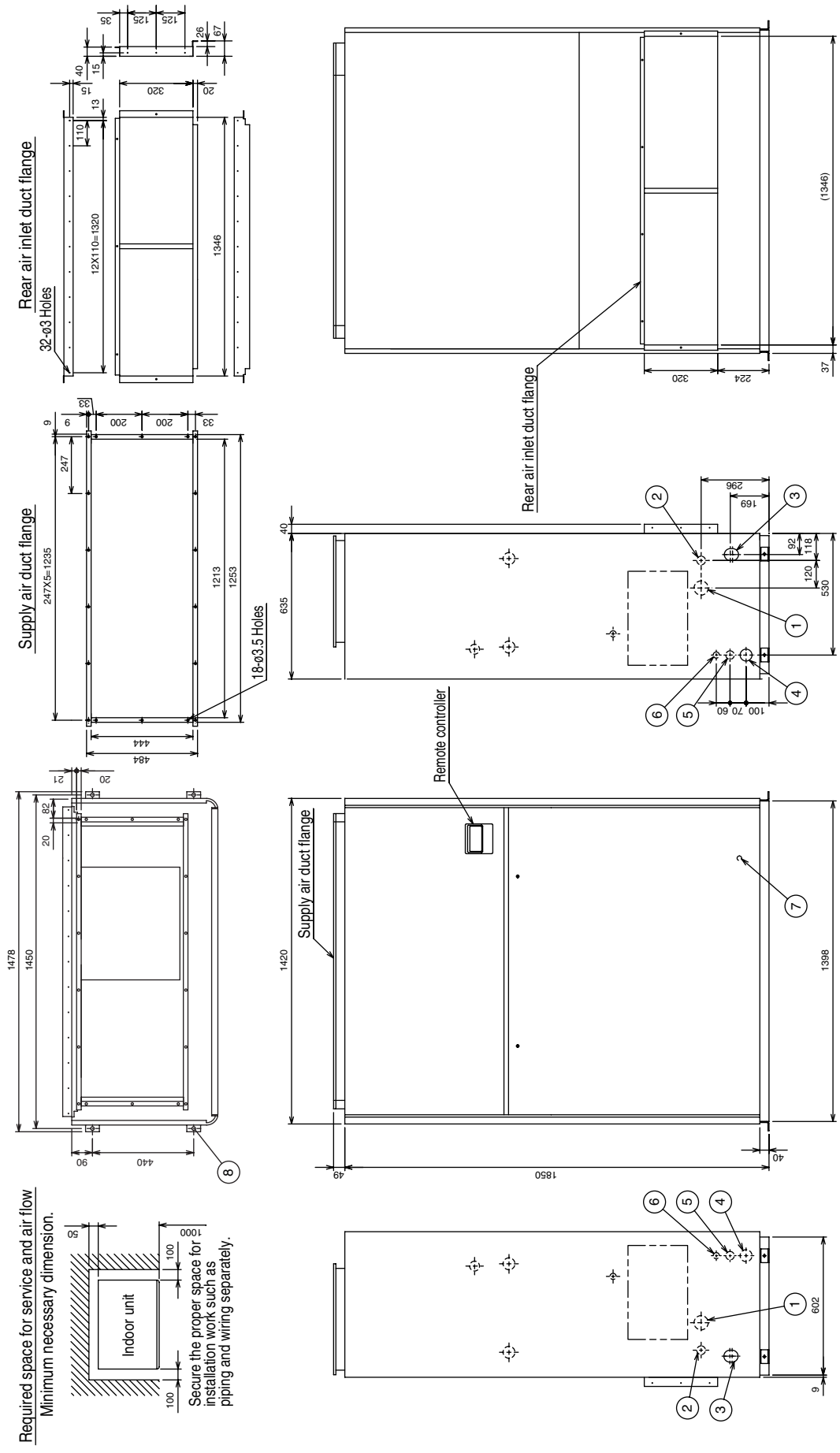

Notes 1.Be sure to wire the transmission line and power line separately.
2.When the room in which the unit is installed is airtight, the pressure in the room may become negative. This may result in problems such as the door to becoming difficult to open etc. To avoid these kinds of problems please ensure that a small amount of air is able to ventilate the room via some kind of small hole or vent.

NO.	Designation
1	Refrigerant pipe<Gas>···ø28.5 brazed
2	Refrigerant pipe<Liquid>···ø15.88 brazed
3	Drain hole·····Rc 1 1/4
4	Power supply wiring hole·····ø52
5	Wiring hole····ø37
6	Wiring hole(The outdoor unit connection,Transmission line)·····ø27
7	Earth terminal(installed in the control box)···M5
8	For mounting anchor bolt 4-ø12 Holes

•PFAV-P900VM-E-F

Unit:mm

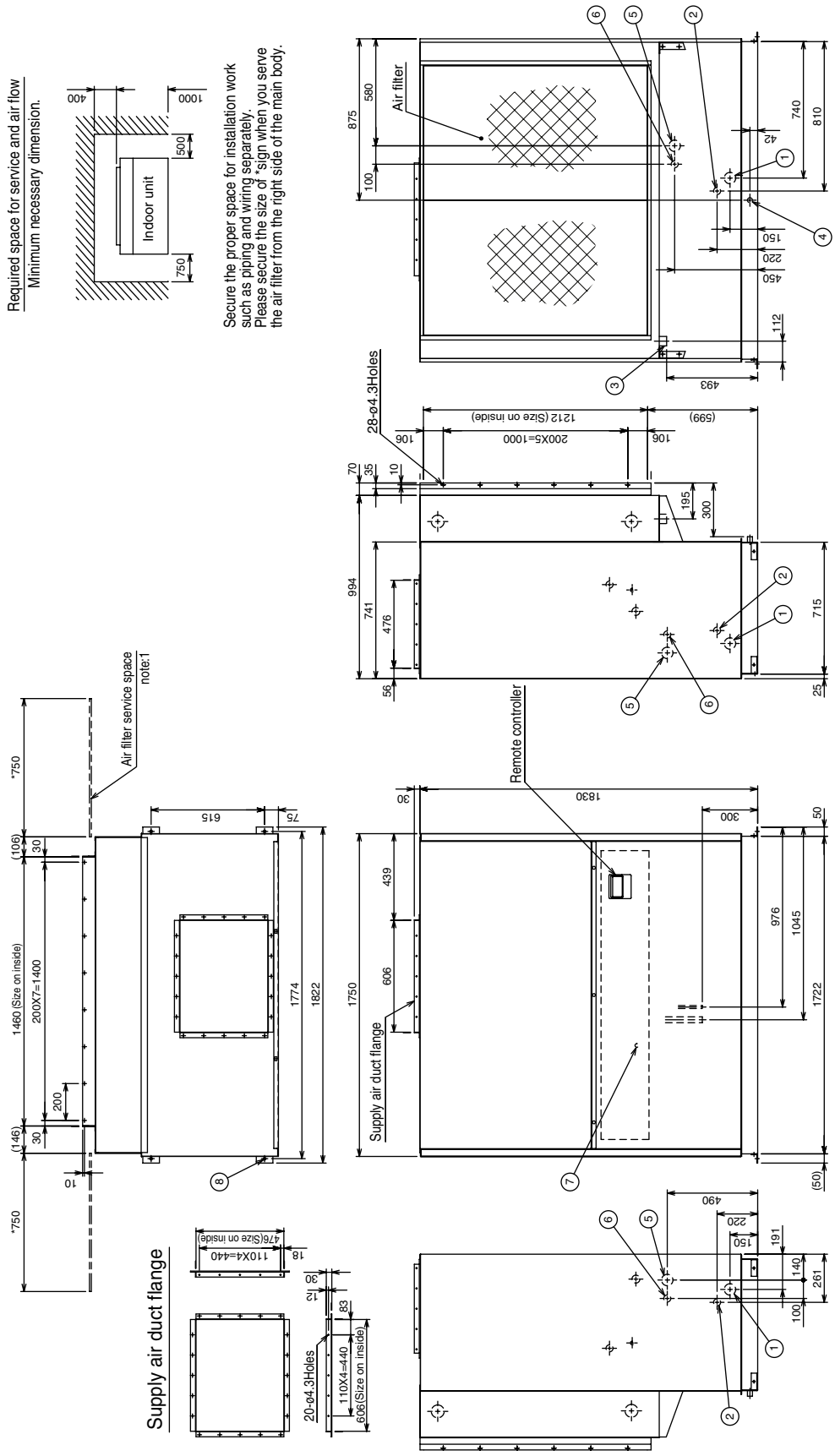

Notes 1.Please secure the size in the service space of the air filter(*sign) for a left side or a right side of the unit.
2.Be sure to wire the transmission line and power line separately.
3.When the room in which the unit is installed is airtight, the pressure in the room may become negative. This may result in problems such as the door to becoming difficult to open etc. To avoid these kinds of problems please ensure that a small amount of air is able to ventilate the room via some kind of small hole or vent.
4.Connect by using the connecting pipes that are supplied.

NO.	Designation
1	Refrigerant pipe<Gas>···ø34.93 brazed
2	Refrigerant pipe<Liquid>···ø19.05 brazed
3	Drain hole<Upper part>·····Rc 1 1/4
4	Drain hole<Lower side>·····Rc 1
5	Wiring hole·····ø62
6	Wiring hole(The outdoor unit connection,Transmission line)·····ø38
7	Earth terminal(installed in the control box)·····M5
8	For mounting anchor bolt 4-ø15 Holes

3. Center of gravity

(1) Indoor unit

•PFAV-P250,P500 (P300-F, P600-F)

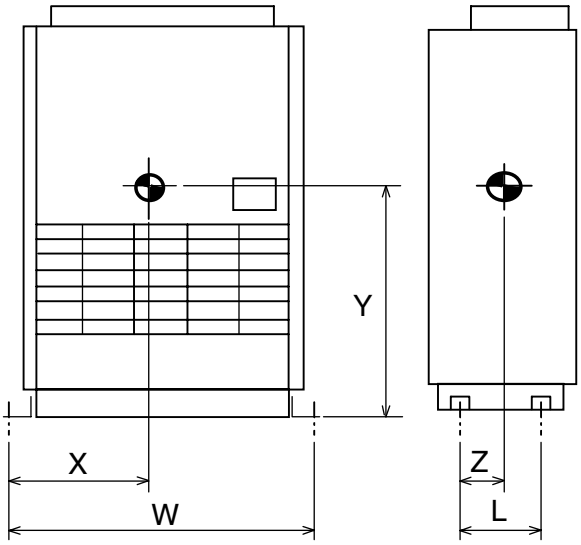

Model	W	L	X	Y	Z
PFAV-P250VM-E	1234	300	573	835	156
PFAV-P500VM-E	1450	440	651	1144	217
PFAV-P300VM-E-F	1234	300	573	825	161
PFAV-P600VM-E-F	1450	440	667	1113	219

•PFAV-P750 (P900-F)

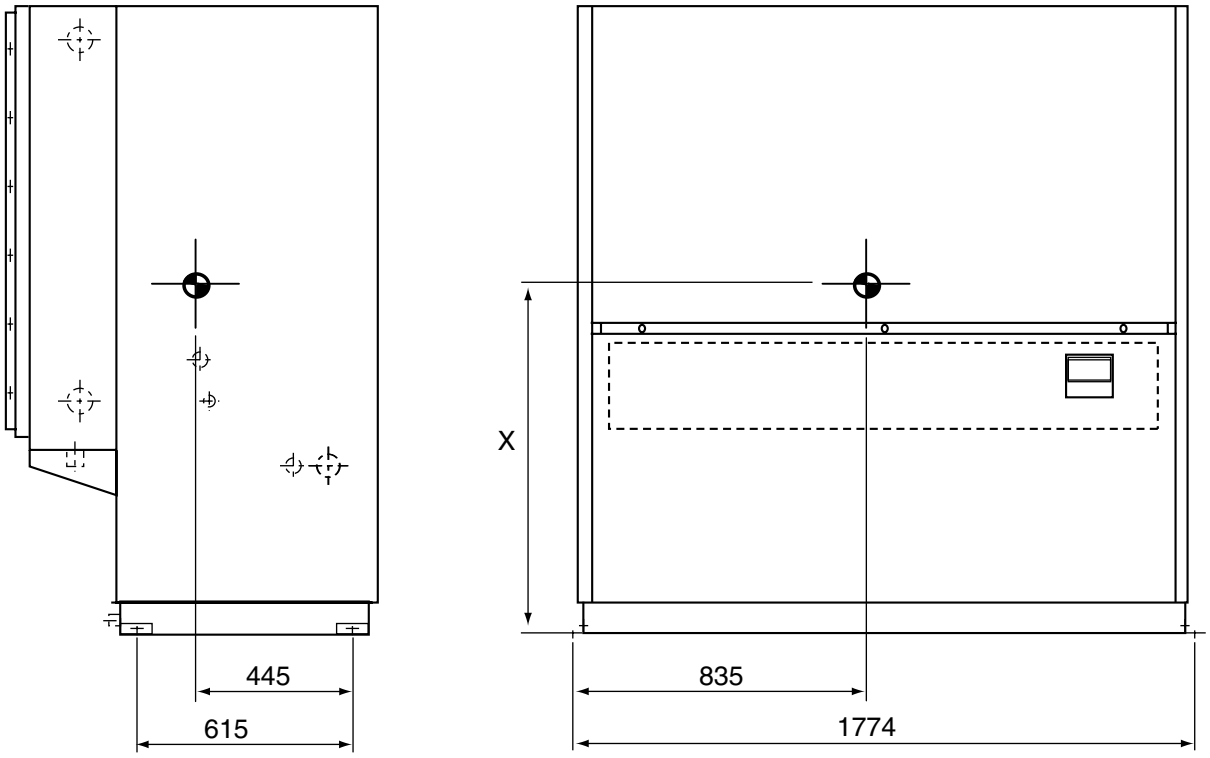

Model	X
PFAV-P750VM-E	1020
PFAV-P900VM-E-F	

4. Electrical wiring diagram

(1) Standard type

•PFAV-P250, 500VM-E

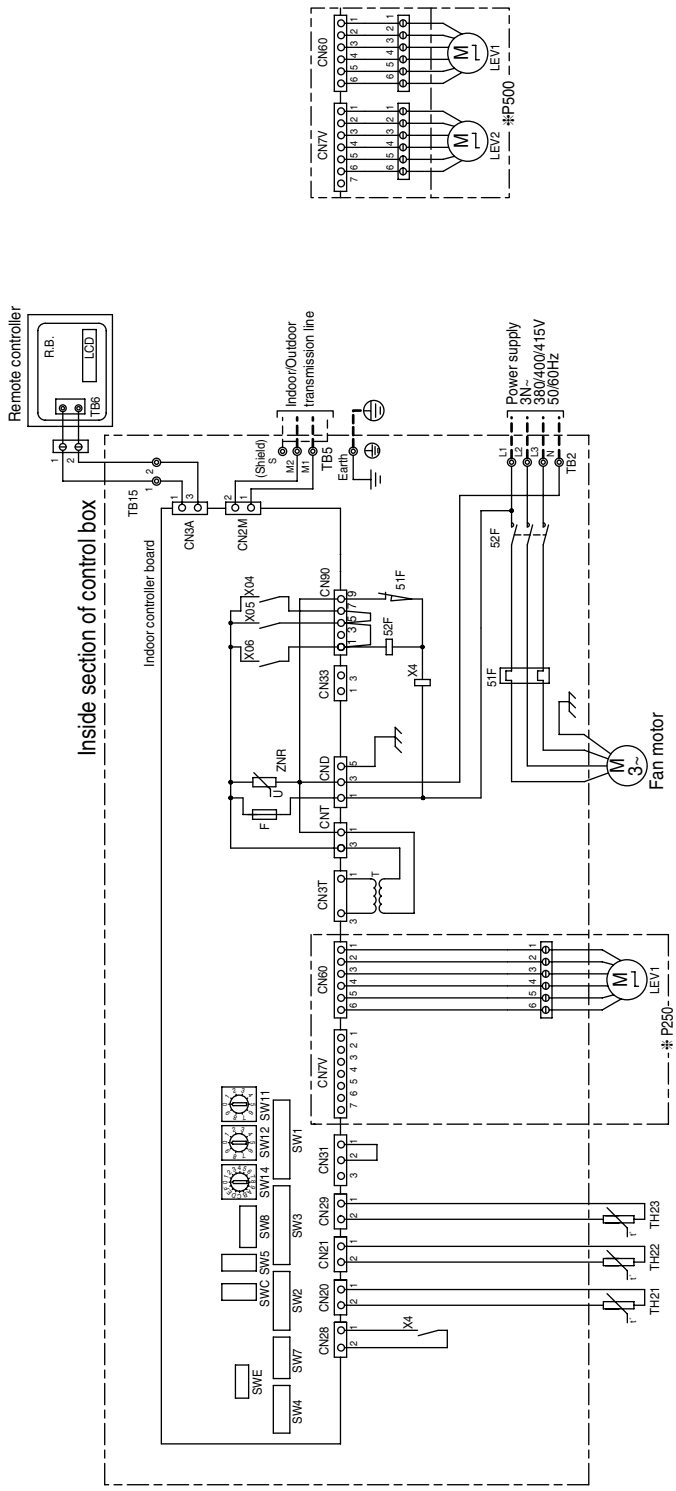

Symbol explanation

Symbol	Name
M	Fan motor
R.B.	Remote controller board
LCD	Liquid crystal monitor
TB2	Power source terminal bed
TB5	Transmission terminal bed
TB6	Terminal bed(Indoor unit)
TB15	MA Remote controller terminal bed
F	Fuse<6.3A>
ZNR	Varistor
T	Transformer
LEV1	Electronic linear expan. valve 1
LEV2	Electronic linear expan. valve 2
51F	Over current relay(Fan motor)
52F	Contactor (Fan motor)
CN28	Connector(Fan failure)
CN33	Connector(Defrost output)
X4	Auxiliary relay(Fan)
TH21	Thermistor(Supply air temp. detection)
TH22	Thermistor(Piping temp. detection/liquid)
TH23	Thermistor(Piping temp. detection/gas)
SW1	Switch (For mode selection)
SW2	Switch (For capacity code)
SW3	Switch (For mode selection)
SW4	Switch (For model selection)
SW5	Switch (For four stages demand selection)
SW7	Switch (For model selection)
SW8	Switch (For trial run)
SW11	Switch (1st digit address set)
SW12	Switch (2nd digit address set)
SW14	Switch (Connection No. set)
SWC	Switch (For mode selection)
SWE	Switch (For trial run of fan)

Note: 1. ---- (Heavy dotted line):Field wiring
2. Have all electric work done by a licensed electrician according to the local regulations.
3. Earth leakage circuit breaker should be set up on the wiring of the power supply.
4. Mark ⊖ indicates terminal bed, ⊖ connector.
5. Auto-restart function from power failure can be turned on by setting SW1-9 dip switch to its ON position. (Note:This function is not set to ON from the factory.)

•PFAV-P750VM-E

Symbol explanation

Symbol	Name
M	Fan motor
R.B.	Remote controller board
LCD	Liquid crystal monitor
TB2	Power source terminal bed
TB5	Transmission terminal bed
TB6	Terminal bed(Indoor unit)
TB15	MA Remote controller terminal bed
F	Fuse<6.3A>
F1	Fuse<6.3A>
ZNR	Varistor
T	Transformer
LEV1	Electronic linear expan. valve 1
LEV2	Electronic linear expan. valve 2
LEV3	Electronic linear expan. valve 3
51F	Over current relay(Fan motor)
52F	Contactor (Fan motor)
CN28	Connector(Fan failure)
CN33	Connector(Defrost output)
X1,X2,X4	Contactor (Fan motor)
TH21	Thermistor(Supply air temp. detection)
TH22	Thermistor(Piping temp. detection/liquid)
TH23	Thermistor(Piping temp. detection/gas)
SW1	Switch (For mode selection)
SW2	Switch (For capacity code)
SW3	Switch (For mode selection)
SW4	Switch (For model selection)
SW5	Switch (For four stages demand selection)
SW7	Switch (For model selection)
SW8	Switch (For trial run)
SW11	Switch (1st digit address set)
SW12	Switch (2nd digit address set)
SW14	Switch (Connection No. set)
SWC	Switch (For mode selection)
SWE	Switch (For trial run of fan)

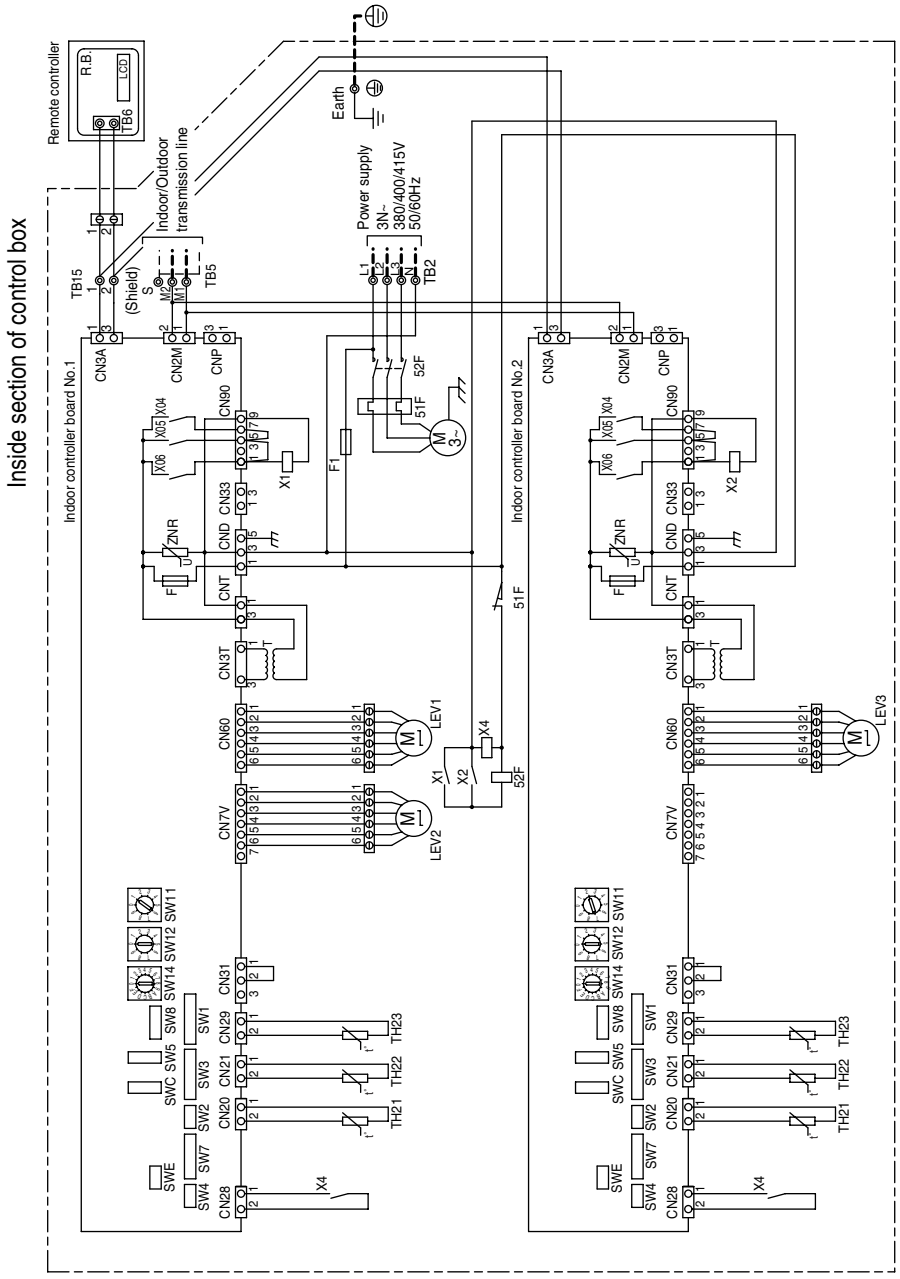

Note: 1. ---- (Heavy dotted line):Field wiring
2. Have all electric work done by a licensed electrician according to the local regulations.
3. Earth leakage circuit breaker should be set up on the wiring of the power supply.
4. Mark ⓪ indicates terminal bed, ⊖ connector.
5. To enable the "auto recovery after power failure" function, set SW1-9 of both No. 1 and No. 2 circuit boards to ON. (Factory setting: OFF)

(2) Fresh air intake type

•PFAV-P300, 600VM-E-F

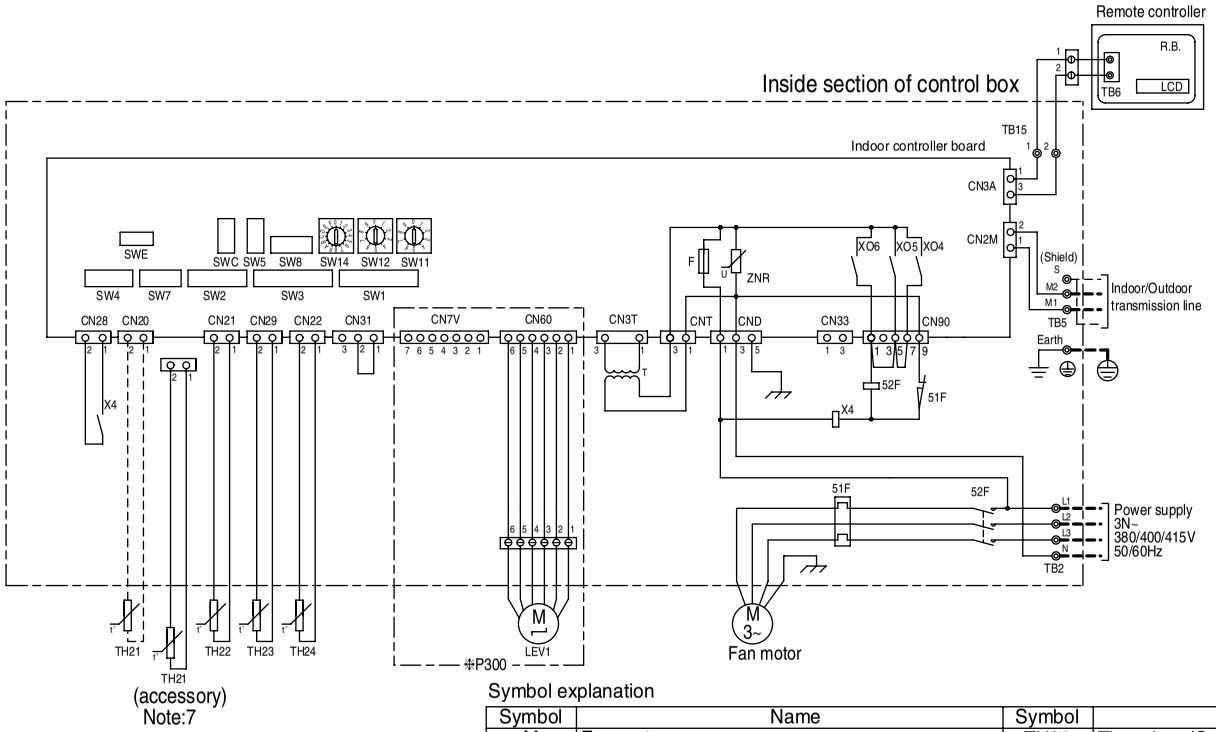

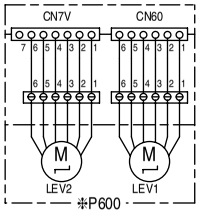

Symbol explanation

Symbol	Name	Symbol	Name
M	Fan motor	TH21	Thermistor(Supply air temp. detection)
R.B.	Remote controller board	TH22	Thermistor(Piping temp. detection/liquid)
LCD	Liquid crystal monitor	TH23	Thermistor(Piping temp. detection/gas)
TB2	Power source terminal bed	TH24	Thermistor(Outdoor temp. detection)
TB5	Transmission terminal bed	SW1	Switch (For mode selection)
TB6	Terminal bed(Indoor unit)	SW2	Switch (For capacity code)
TB15	MA Remote controller terminal bed	SW3	Switch (For mode selection)
F	Fuse<6.3A>	SW4	Switch (For model selection)
ZNR	Varistor	SW5	Switch (For four stages demand selection)
T	Transformer	SW7	Switch (For model selection)
LEV1	Electronic linear expan. valve 1	SW8	Switch (For trial run)
LEV2	Electronic linear expan. valve 2	SW11	Switch (1st digit address set)
51F	Over current relay(Fan motor)	SW12	Switch (2nd digit address set)
52F	Contactor (Fan motor)	SW14	Switch (Connection No. set)
CN28	Connector(Fan failure)	SWC	Switch (For mode selection)
CN33	Connector(Defrost output)	SWE	Switch (For trial run of fan)
X4	Auxiliary relay(Fan)		

Note: 1. ----- (Heavy dotted line): Field wiring
2. Have all electric work done by a licensed electrician according to the local regulations.
3. Earth leakage circuit breaker should be set up on the wiring of the power supply.
4. Mark ◎ indicates terminal bed, ⊖ connector.
5. Auto-restart function from power failure can be turned on by setting SW1-9 dip switch to its ON position.
(Note: This function is not set to ON from the factory.)
6. Supply air thermistor is built in on the inside of the indoor unit.
A jumper is taped inside the control box without it being connected to the connector.
Plug it into CN20 when using the supply air temperature to control the room temperature.
Turn SW7-2 on the indoor unit to ON.
7. Indoor unit is supplied with a thermistor.
Install the sensor in the room to properly control the room temperature.

Inside section of control box

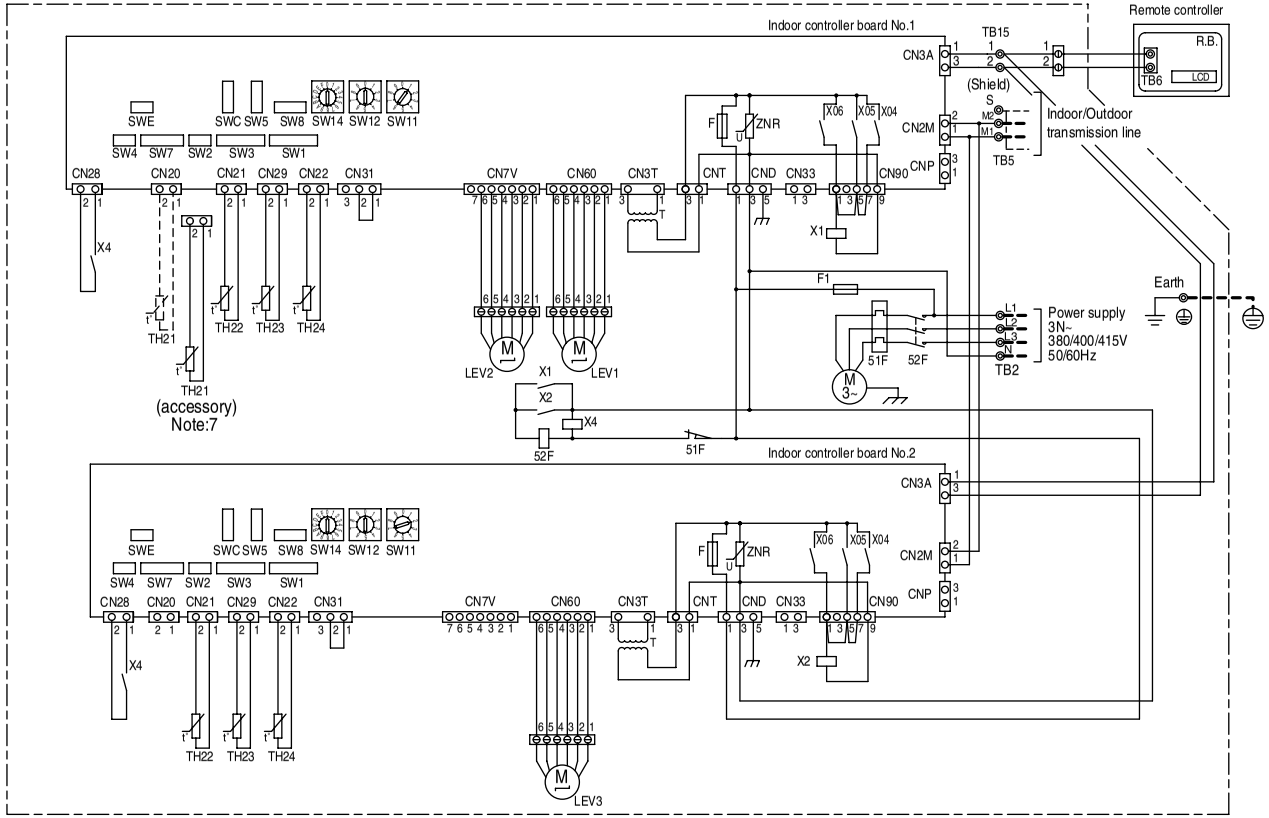

Symbol explanation

Symbol	Name
M	Fan motor
R.B.	Remote controller board
LCD	Liquid crystal monitor
TB2	Power source terminal bed
TB5	Transmission terminal bed
TB6	Terminal bed(Indoor unit)
TB15	MA Remote controller terminal bed
F	Fuse<6.3A>
F1	Fuse<6.3A>
ZNR	Varistor
T	Transformer
LEV1	Electronic linear expan. valve 1
LEV2	Electronic linear expan. valve 2
LEV3	Electronic linear expan. valve 3
51F	Over current relay(Fan motor)
52F	Contactor (Fan motor)
CN28	Connector(Fan failure)
CN33	Connector(Defrost output)
X1,X2,X4	Contactor (Fan motor)
TH21	Thermistor(Supply air temp. detection)
TH22	Thermistor(Piping temp. detection/liquid)
TH23	Thermistor(Piping temp. detection/gas)
TH24	Thermistor(Outdoor temp. detection)
SW1	Switch (For mode selection)
SW2	Switch (For capacity code)
SW3	Switch (For mode selection)
SW4	Switch (For model selection)
SW5	Switch (For four stages demand selection)
SW7	Switch (For model selection)
SW8	Switch (For trial run)
SW11	Switch (1st digit address set)
SW12	Switch (2nd digit address set)
SW14	Switch (Connection No. set)
SWC	Switch (For mode selection)
SWE	Switch (For trial run of fan)

Note: 1. ----- (Heavy dotted line): Field wiring
2. Have all electric work done by a licensed electrician according to the local regulations.
3. Earth leakage circuit breaker should be set up on the wiring of the power supply.
4. Mark ◎ indicates terminal bed, ⊖ connector.
5. To enable the "auto recovery after power failure" function, set SW1-9 of both No. 1 and No. 2 circuit boards to ON.
(Factory setting: OFF)
6. Supply air thermistor is built in on the inside of the indoor unit.
A jumper is taped inside the control box without it being connected to the connector.
Plug the jumper into CN20 on No. 1 circuit board when using the supply air temperature to control the room temperature. Turn SW7-2 of both No. 1 and No. 2 circuit boards on the indoor unit to ON.
7. Indoor unit is supplied with a thermistor.
Install the sensor in the room to properly control the room temperature.

5. Sound Pressure Levels

•PFAV-P250VM-E

Power sorce : 3N 380/400/415V 50/60Hz

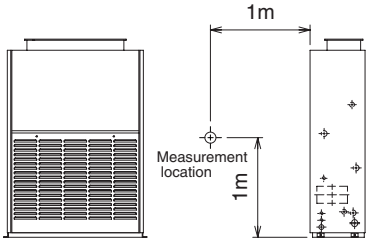

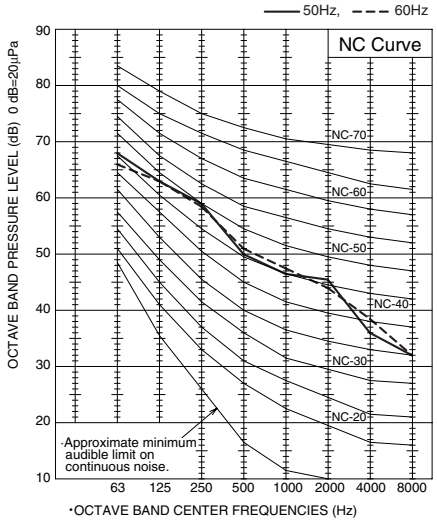

	63Hz	125Hz	250Hz	500Hz	1000Hz	2000Hz	4000Hz	8000Hz	dB(A)
50Hz	68	63	59	50	46.5	45.5	36	32	55
60Hz	66	63	58.5	51	47.5	44	38.5	32	55

Note:The measuring point is the 1m from the bottom of the unit.
(1m from the front of the unit.)

•PFAV-P500VM-E

Power sorce : 3N 380/400/415V 50/60Hz

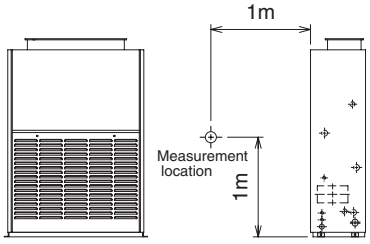

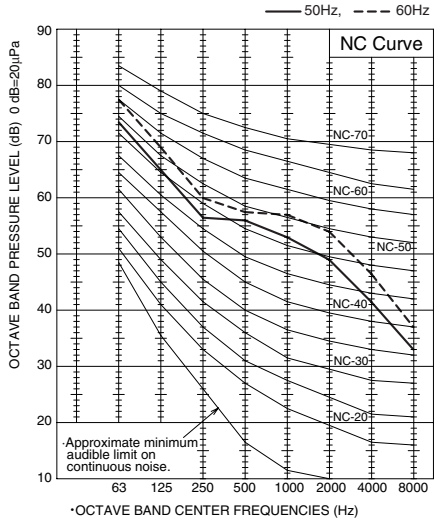

	63Hz	125Hz	250Hz	500Hz	1000Hz	2000Hz	4000Hz	8000Hz	dB(A)
50Hz	73.5	65	56.5	56	53	49	41.5	33	59
60Hz	77.5	69	60	57.5	57	54	46.5	38	62

Note:The measuring point is the 1m from the bottom of the unit.
(1m from the front of the unit.)

•PFAV-P750VM-E

Power sorce : 3N 380/400/415V 50/60Hz

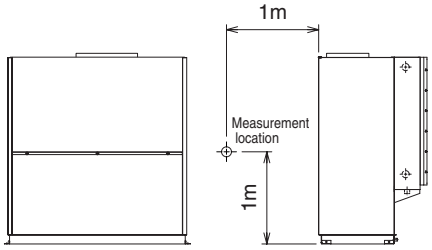

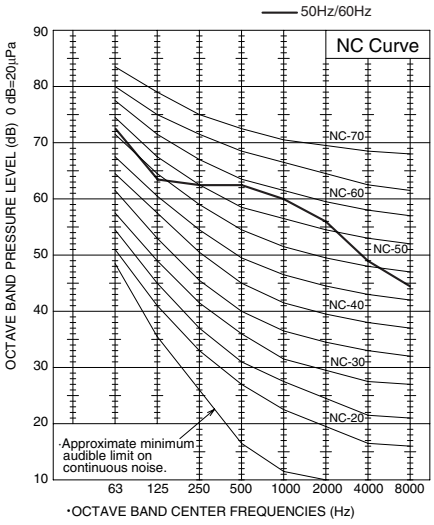

	63Hz	125Hz	250Hz	500Hz	1000Hz	2000Hz	4000Hz	8000Hz	dB(A)
50Hz	72.5	63.5	62.5	62.5	60	56	49	44.5	65
60Hz	72.5	63.5	62.5	62.5	60	56	49	44.5	65

Note:The measuring point is the 1m from the bottom of the unit.
(1m from the front of the unit.)

•PFAV-P300VM-E-F

Power sorce : 3N 380/400/415V 50/60Hz

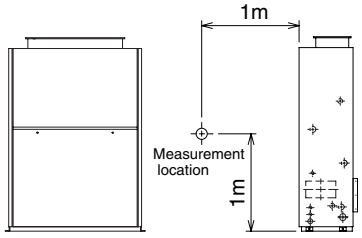

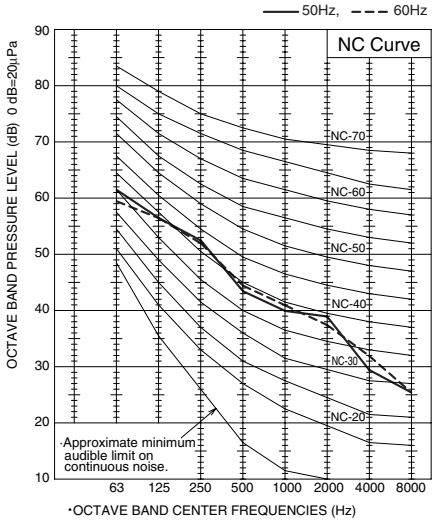

	63Hz	125Hz	250Hz	500Hz	1000Hz	2000Hz	4000Hz	8000Hz	dB(A)
50Hz	61.5	56.5	52.5	43.5	40	39	29.5	25.5	48.5
60Hz	59.5	56.5	52	44.5	41	37.5	32	25.5	48.5

Note:The measuring point is the 1m from the bottom of the unit.
(1m from the front of the unit.)

•PFAV-P600VM-E-F

Power sorce : 3N 380/400/415V 50/60Hz

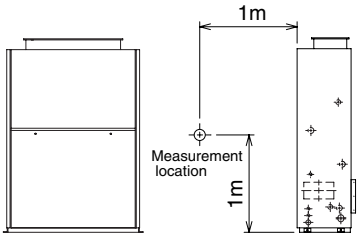

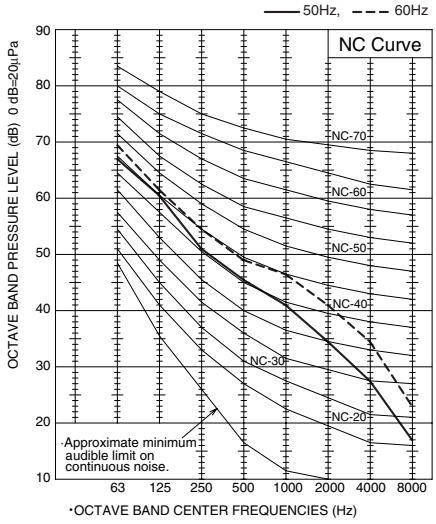

	63Hz	125Hz	250Hz	500Hz	1000Hz	2000Hz	4000Hz	8000Hz	dB(A)
50Hz	67	60.5	51	45.5	41	34.5	27.5	17	50
60Hz	69.5	61.5	54.5	49	46.5	41	34.5	23	53

Note:The measuring point is the 1m from the bottom of the unit.
(1m from the front of the unit.)

•PFAV-P900VM-E-F

Power sorce : 3N 380/400/415V 50/60Hz

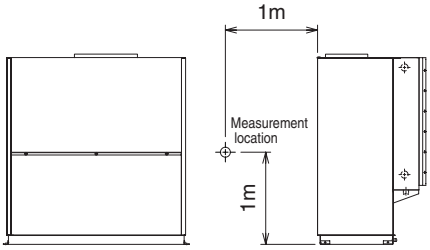

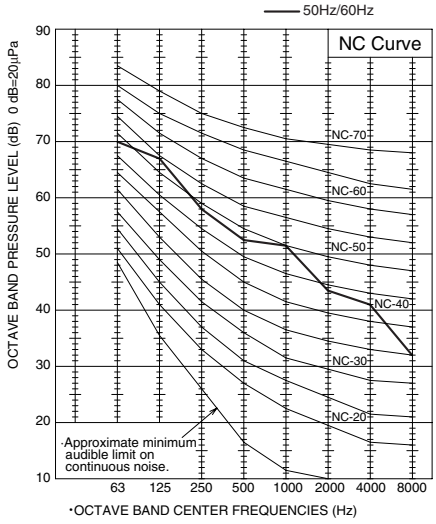

	63Hz	125Hz	250Hz	500Hz	1000Hz	2000Hz	4000Hz	8000Hz	dB(A)
50Hz	70	67	58	52.5	51.5	43.5	41	32	57
60Hz	70	67	58	52.5	51.5	43.5	41	32	57

Note:The measuring point is the 1m from the bottom of the unit.
(1m from the front of the unit.)

6. Vibration levels

•PFAV indoor unit

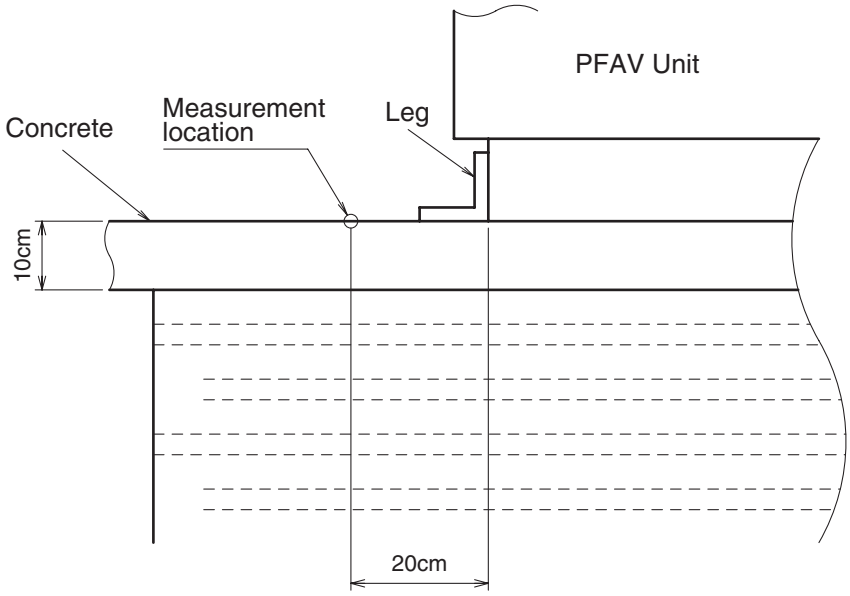

Model	Vibration Levels [dBA]
PFAV-P250,500,750VM-E PFAV-P300,600,900VM-E-F	40 or less

7. Fan characteristic curves

•PFAV-P250VM-E

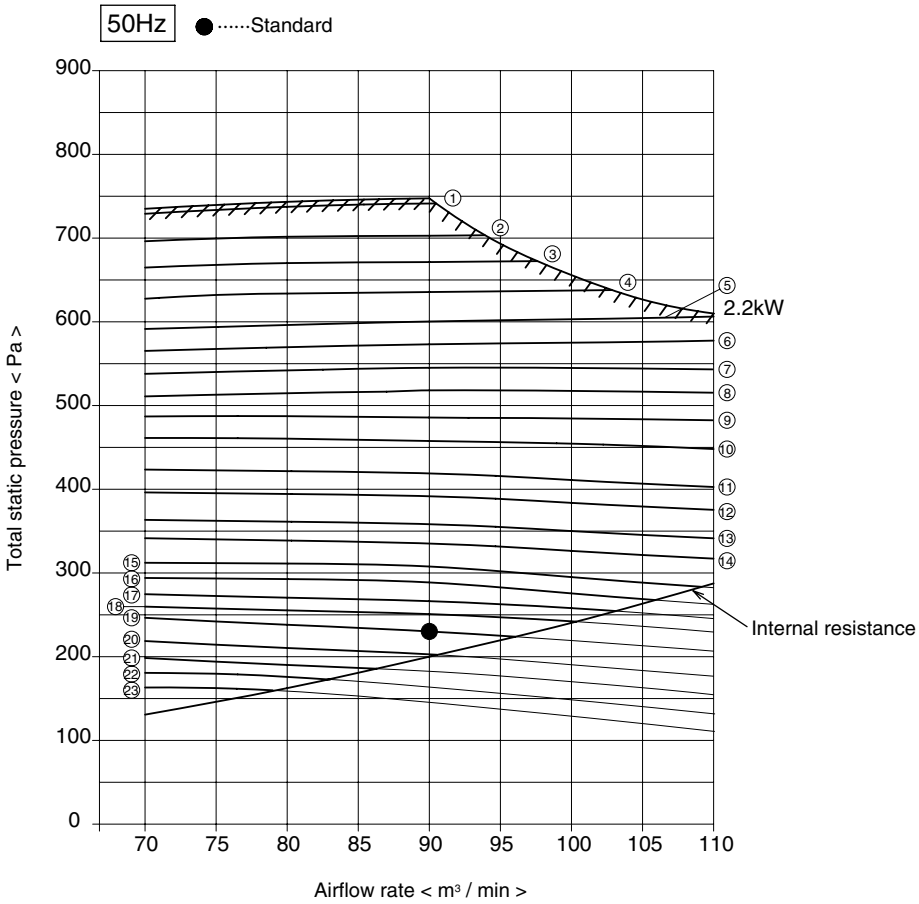

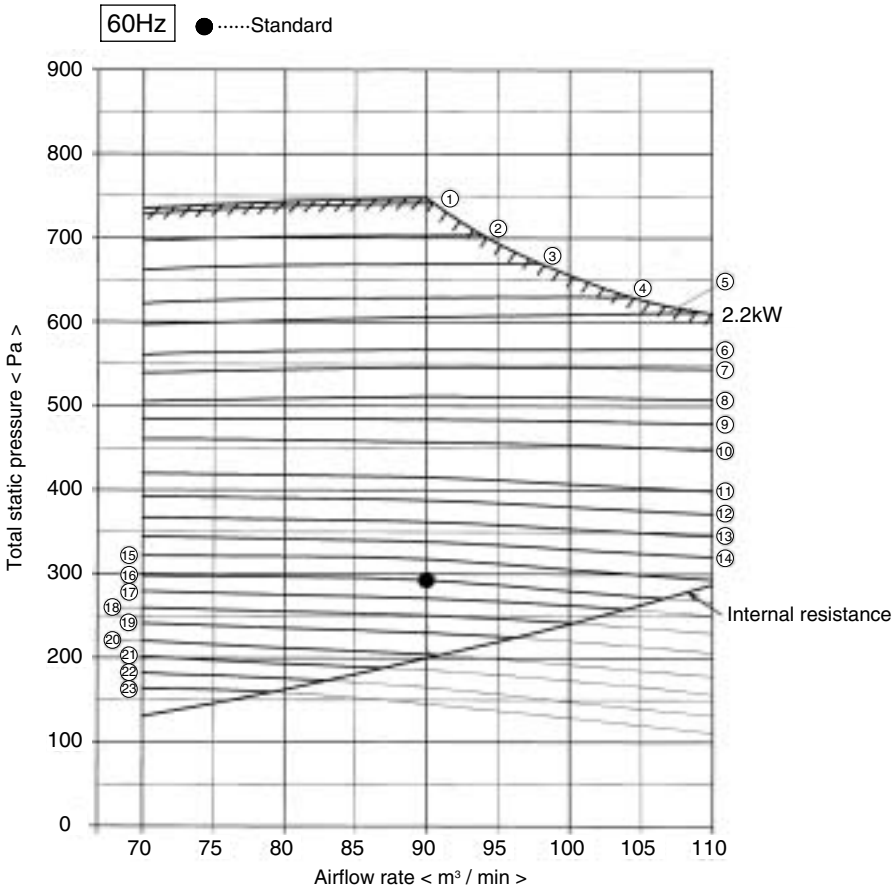

Specification(Pulley , Belt)

Standard(Factory set) <50Hz>

Motor	Motor pulley		Fan pulley		V-belt (H) <mm / in>	Over current relay (Fan motor)
	Pitch diameter (Changeability) <PCø>	Bore (E) <ø>	Nominal diameter (B) <ø>	Bore (E) <ø>		
2.2kW	140.2	28	212	20	1423 / 56	5.0A

		Motor 2.2kW,1450rpm <50Hz>														
		Motor pulley					Fan pulley									
No.	Rotational speed <rpm>	Outside diameter <ø>	Slide peace Rotation number	Bore (E) <ø>	(F) <mm>	(G) <mm>	Outside diameter (A) <ø>	Nominal Diameter (B) <ø>	(C) <ø>	(D) <ø>	Bore (E) <ø>	(F) <mm>	(G) <mm>	V-belt (H) <mm / in>	Deflection force <N>	Amount of deflection <mm>
①	1663	159	3	28	31.3	8	127	118	102	50	20	23.5	7	1270 / 50	17.7	7.0
②	1620	159	1/2	28	31.3	8	141	132	116	50	20	23.5	7	1296 / 51	16.5	6.9
③	1581	159	1·1/4	28	31.3	8	141	132	116	50	20	23.5	7	1296 / 51	16.8	6.9
④	1540	159	2	28	31.3	8	141	132	116	50	20	23.5	7	1296 / 51	17.2	6.9
⑤	1499	159	2·3/4	28	31.3	8	141	132	116	50	20	23.5	7	1296 / 51	17.6	7.0
⑥	1459	159	2·1/2	28	31.3	8	141	132	116	50	20	23.5	7	1296 / 51	18.0	7.0
⑦	1418	159	4·1/4	28	31.3	8	141	132	116	50	20	23.5	7	1296 / 51	18.4	7.1
⑧	1378	159	1·1/2	28	31.3	8	159	150	134	56	20	23.5	7	1321 / 52	16.9	6.9
⑨	1344	159	2·1/2	28	31.3	8	159	150	134	56	20	23.5	7	1321 / 52	17.4	7.0
⑩	1308	159	3	28	31.3	8	159	150	134	56	20	23.5	7	1321 / 52	17.7	7.0
⑪	1261	159	4	28	31.3	8	159	150	134	56	20	23.5	7	1321 / 52	18.2	7.0
⑫	1225	159	4·3/4	28	31.3	8	159	150	134	56	20	23.5	7	1321 / 52	19.0	7.1
⑬	1179	159	3/4	28	31.3	8	189	180	164	56	20	23.5	7	1372 / 54	16.8	6.9
⑭	1139	159	1·3/4	28	31.3	8	189	180	164	56	20	23.5	7	1372 / 54	17.3	6.9
⑮	1100	159	2·3/4	28	31.3	8	189	180	164	56	20	23.5	7	1372 / 54	17.8	7.0
⑯	1060	159	3·3/4	28	31.3	8	189	180	164	56	20	23.5	7	1372 / 54	18.4	7.0
⑰	1018	159	1/4	28	31.3	8	221	212	196	54	20	23.5	7	1423 / 56	16.6	6.8
⑱	992	159	1	28	31.3	8	221	212	196	54	20	23.5	7	1423 / 56	17.5	6.9
⑲	955	159	2	28	31.3	8	221	212	196	54	20	23.5	7	1423 / 56	18.0	6.9
⑳	908	159	2	28	31.3	8	233	224	208	54	20	23.5	7	1423 / 56	18.0	6.7
㉑	868	159	3·1/4	28	31.3	8	233	224	208	54	20	23.5	7	1423 / 56	18.6	6.8
㉒	820	159	4·3/4	28	31.3	8	233	224	208	54	20	23.5	7	1423 / 56	19.6	6.9
㉓	785	159	3	28	31.3	8	259	250	234	54	20	23.5	7	1474 / 58	18.8	6.8

Standard <60Hz>

Motor	Motor pulley		Fan pulley		V-belt (H) <mm / in>	Over current relay (Fan motor)
	Pitch diameter (Changeability) <PCø>	Bore <ø>	Nominal diameter (B) <ø>	Bore (E) <ø>		
2.2kW	129.1 (factory set 140.2)	28	212	20	1423 / 56	5.0A

		Motor 2.2kW,1750rpm <60Hz>														
		Motor pulley					Fan pulley									
No.	Rotational speed <rpm>	Outside diameter <ø>	Slide peace Rotation number	Bore (E) <ø>	(F) <mm>	(G) <mm>	Outside diameter (A) <ø>	Nominal Diameter (B) <ø>	(C) <ø>	(D) <ø>	Bore (E) <ø>	(F) <mm>	(G) <mm>	V-belt (H) <mm / in>	Deflection force <N>	Amount of deflection <mm>
①	1664	159	1·1/2	28	31.3	8	159	150	134	56	20	23.5	7	1321 / 52	14.7	6.9
②	1622	159	2·1/2	28	31.3	8	159	150	134	56	20	23.5	7	1321 / 52	15.1	7.0
③	1579	159	3	28	31.3	8	159	150	134	56	20	23.5	7	1321 / 52	15.3	7.0
④	1535	159	3·3/4	28	31.3	8	159	150	134	56	20	23.5	7	1321 / 52	15.6	7.0
⑤	1506	159	4·1/4	28	31.3	8	159	150	134	56	20	23.5	7	1321 / 52	15.8	7.1
⑥	1458	159	1·1/2	28	31.3	8	189	180	164	56	20	23.5	7	1372 / 54	14.9	6.9
⑦	1422	159	3/4	28	31.3	8	189	180	164	56	20	23.5	7	1372 / 54	14.7	6.9
⑧	1375	159	1·3/4	28	31.3	8	189	180	164	56	20	23.5	7	1372 / 54	15.0	6.9
⑨	1339	159	2·1/2	28	31.3	8	189	180	164	56	20	23.5	7	1372 / 54	15.3	7.0
⑩	1304	159	3·1/4	28	31.3	8	189	180	164	56	20	23.5	7	1372 / 54	15.6	7.0
⑪	1248	159	4·1/4	28	31.3	8	189	180	164	56	20	23.5	7	1372 / 54	16.0	7.1
⑫	1221	159	1/4	28	31.3	8	221	212	196	54	20	23.5	7	1423 / 56	14.5	6.8
⑬	1181	159	1·1/4	28	31.3	8	221	212	196	54	20	23.5	7	1423 / 56	15.3	6.9
⑭	1141	159	2·1/4	28	31.3	8	221	212	196	54	20	23.5	7	1423 / 56	15.7	6.9
⑮	1101	159	3·1/4	28	31.3	8	221	212	196	54	20	23.5	7	1423 / 56	16.1	7.0
⑯	1060	159	4·1/4	28	31.3	8	221	212	196	54	20	23.5	7	1423 / 56	16.5	7.0
⑰	1022	159	3·3/4	28	31.3	8	233	224	208	54	20	23.5	7	1423 / 56	16.3	6.8
⑱	994	159	4·1/2	28	31.3	8	233	224	208	54	20	23.5	7	1423 / 56	16.6	6.9
⑲	967	159	2·1/4	28	31.3	8	259	250	234	54	20	23.5	7	1474 / 58	15.9	6.8
⑳	908	159	4	28	31.3	8	259	250	234	54	20	23.5	7	1474 / 58	16.6	6.9
㉑	879	159	1·3/4	28	31.3	8	289	280	264	54	20	23.5	7	1499 / 59	15.7	6.5
㉒	825	159	3·1/2	28	31.3	8	289	280	264	54	20	23.5	7	1499 / 59	16.9	6.6
㉓	787	159	4·3/4	28	31.3	8	289	280	264	54	20	23.5	7	1499 / 59	17.5	6.7

Variable-width pulley PC ø table

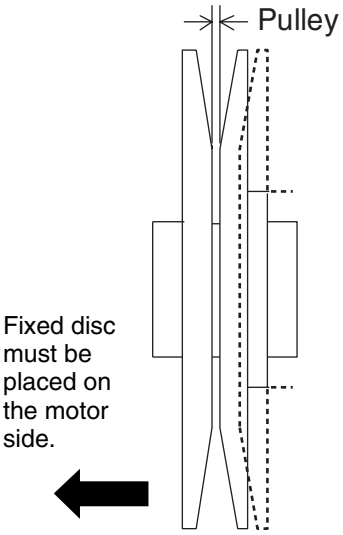

Number of turns to apply	Pulley distance (mm)	PC ø of variable-width pulleys for 2.2kW motor
0	(0)	150.0
1/4	(0.4)	148.8
1/2	(0.8)	147.5
3/4	(1.1)	146.3
1	(1.5)	145.1
1·1/4	(1.9)	143.9
1·1/2	(2.3)	142.6
1·3/4	(2.6)	141.4
2	(3.0)	140.2
2·1/4	(3.4)	139.0
2·1/2	(3.8)	137.7
2·3/4	(4.1)	136.5
3	(4.5)	135.3
3·1/4	(4.9)	134.1
3·1/2	(5.3)	132.8
3·3/4	(5.6)	131.6
4	(6.0)	130.4
4·1/4	(6.4)	129.1
4·1/2	(6.8)	127.9
4·3/4	(7.1)	126.7

Shape of the pulley (unit:mm)

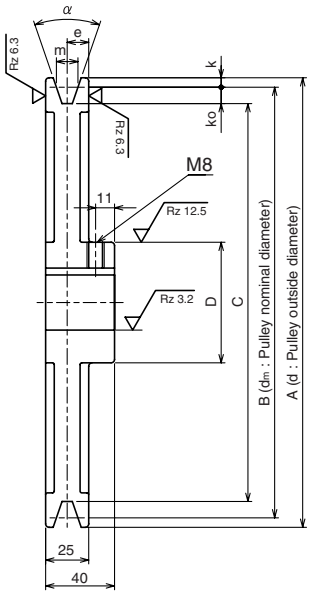

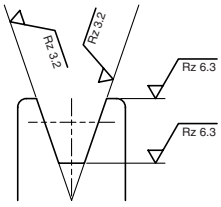

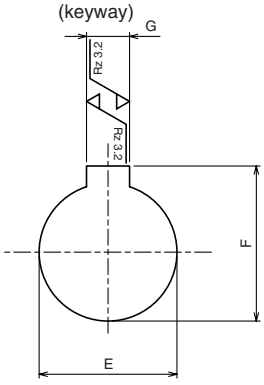

	dm:Pulley nominal diameter	α	m	k	ko	e
Belt	dm ≦ 126	34°	12.5	5.5	9.5	12.5
	161 < dm ≦200	36°				
	201 < dm	38°				

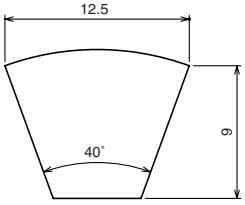

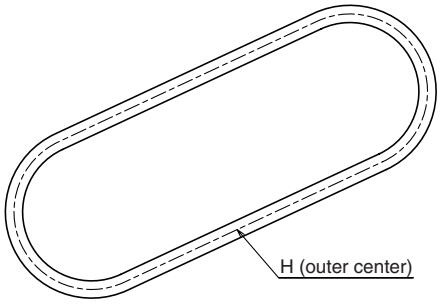

* See p.40 for "How to choose the pulley."

•PFAV-P500VM-E

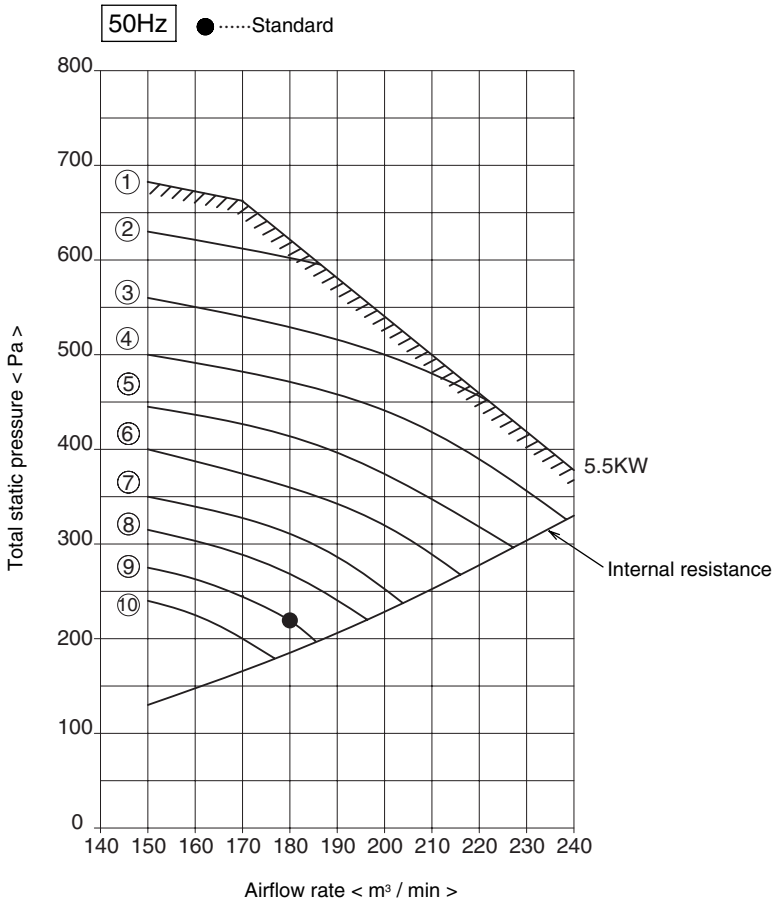

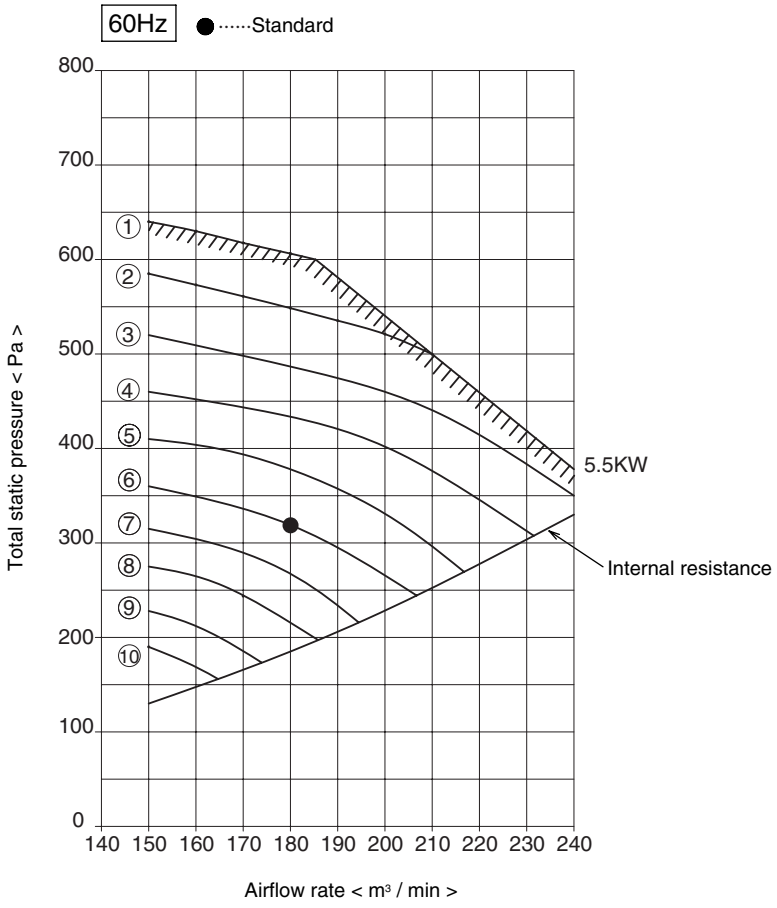

Specification(Pulley , Belt)

Standard(Factory set) <50Hz>

Motor	Motor pulley		Fan pulley		V-belt (H) <mm / in>	Over current relay (Fan motor)
	Nominal diameter (B) <ø>	Bore (E) <ø>	Nominal diameter (B) <ø>	Bore (E) <ø>		
5.5kW	118	38	236	32	1042 / 41	11A

		Motor 5.5kW,1450rpm <50Hz>																
		Motor pulley							Fan pulley									
No.	Rotational speed <rpm>	Outside diameter (A) <ø>	Nominal Diameter (B) <ø>	(C) <ø>	(D) <ø>	Bore (E) <ø>	(F) <mm>	(G) <mm>	Outside diameter (A) <ø>	Nominal Diameter (B) <ø>	(C) <ø>	(D) <ø>	Bore (E) <ø>	(F) <mm>	(G) <mm>	V-belt (H) <mm / in>	Deflection force <N>	Amount of deflection <mm>
①	1135	156	145	126	71	38	41.3	10	201	190	171	80	32	36	10	966 / 38	23.2	3.5
②	1094	136	125	106	70	38	42	10	181	170	151	71	32	36	10	889 / 35	25.9	3.4
③	1034	129	118	99	70	38	42	10	181	170	151	71	32	36	10	889 / 35	27.2	3.4
④	979	129	118	99	70	38	42	10	191	180	161	71	32	36	10	915 / 36	27.6	3.5
⑤	929	129	118	99	70	38	42	10	201	190	171	80	32	36	10	915 / 36	27.6	3.3
⑥	884	129	118	99	70	38	42	10	211	200	181	80	32	36	10	940 / 37	28.5	3.4
⑦	835	129	118	99	70	38	42	10	223	212	193	80	32	36	10	966 / 38	28.5	3.4
⑧	796	136	125	106	70	38	42	10	247	236	217	80	32	36	10	1016 / 40	27.6	3.4
⑨	753	129	118	99	70	38	42	10	247	236	217	80	32	36	10	1042 / 41	28.9	3.6
⑩	712	129	118	99	70	38	42	10	261	250	231	80	32	36	10	1042 / 41	29.9	3.4

Note1. Use two V-belts for P500 indoor unit.

Standard <60Hz>

Motor	Motor pulley		Fan pulley		V-belt (H) <mm / in>	Over current relay (Fan motor)
	Nominal diameter (B) <ø>	Bore (E) <ø>	Nominal diameter (B) <ø>	Bore (E) <ø>		
5.5kW	118	38	236	32	1042 / 41	11A

		Motor 5.5kW,1750rpm <60Hz>																
		Motor pulley							Fan pulley									
No.	Rotational speed <rpm>	Outside diameter (A) <ø>	Nominal Diameter (B) <ø>	(C) <ø>	(D) <ø>	Bore (E) <ø>	(F) <mm>	(G) <mm>	Outside diameter (A) <ø>	Nominal Diameter (B) <ø>	(C) <ø>	(D) <ø>	Bore (E) <ø>	(F) <mm>	(G) <mm>	V-belt (H) <mm / in>	Deflection force <N>	Amount of deflection <mm>
①	1105	156	145	126	71	38	41.3	10	235	224	205	80	32	36	10	1016 / 40	21.4	3.4
②	1059	129	118	99	70	38	42	10	201	190	171	80	32	36	10	915 / 36	23.8	3.3
③	1005	129	118	99	70	38	42	10	211	200	181	80	32	36	10	940 / 37	24.5	3.4
④	946	129	118	99	70	38	42	10	223	212	193	80	32	36	10	966 / 38	24.5	3.4
⑤	894	129	118	99	70	38	42	10	235	224	205	80	32	36	10	991 / 39	24.9	3.4
⑥	847	129	118	99	70	38	42	10	247	236	217	80	32	36	10	1042 / 41	24.9	3.6
⑦	798	129	118	99	70	38	42	10	261	250	231	80	32	36	10	1042 / 41	25.7	3.4
⑧	753	136	125	106	70	38	42	10	291	280	261	80	32	36	10	1118 / 44	25.4	3.4
⑨	701	136	125	106	70	38	42	10	311	300	281	80	32	36	10	1143 / 45	26.2	3.2
⑩	660	129	118	99	70	38	42	10	311	300	281	80	32	36	10	1143 / 45	27.3	3.3

Note1. Use two V-belts for P500 indoor unit.

Shape of the pulley (unit:mm)

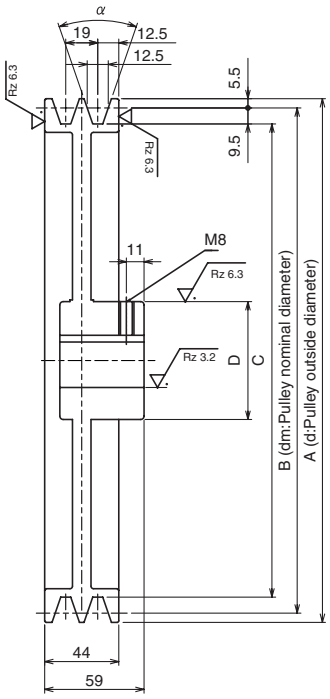

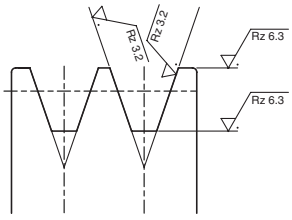

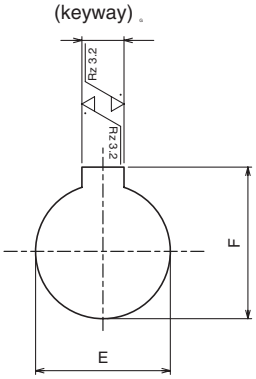

Belt	dm:Pulley nominal diameter	α
	dm ≦ 160	34°
	161 < dm ≦200	36°
	201 < dm	38°

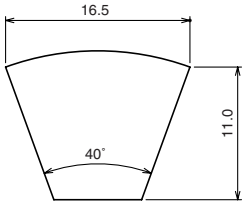

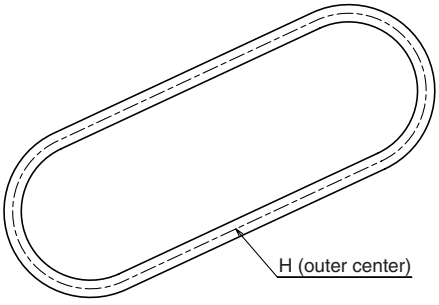

* See p.40 for "How to choose the pulley."

•PFAV-P750VM-E

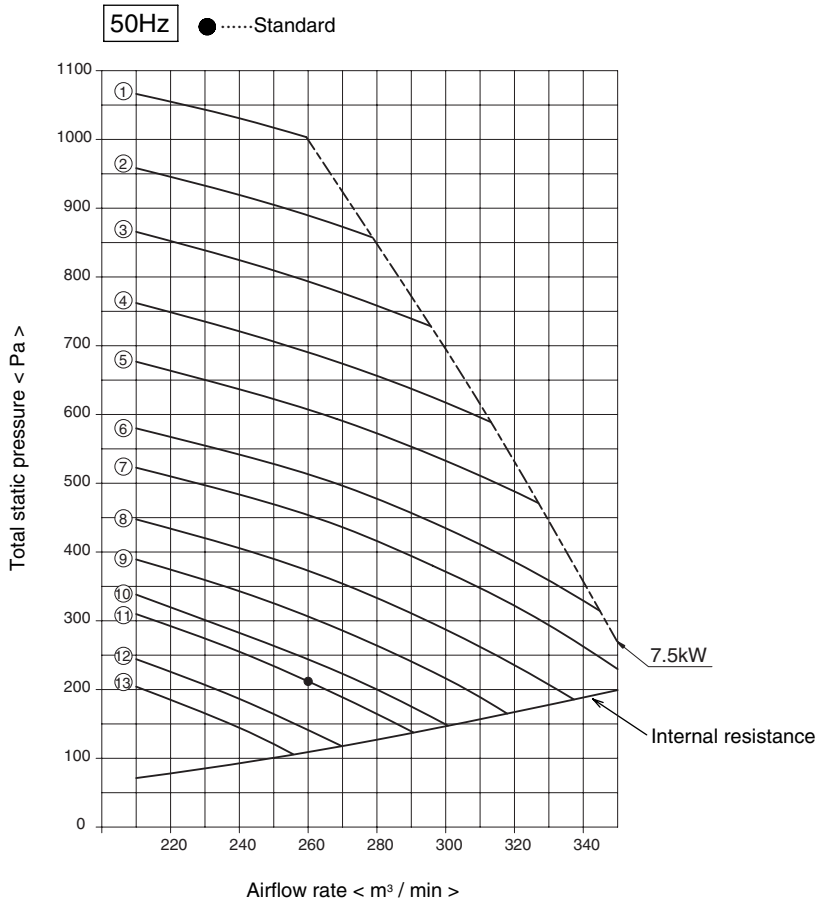

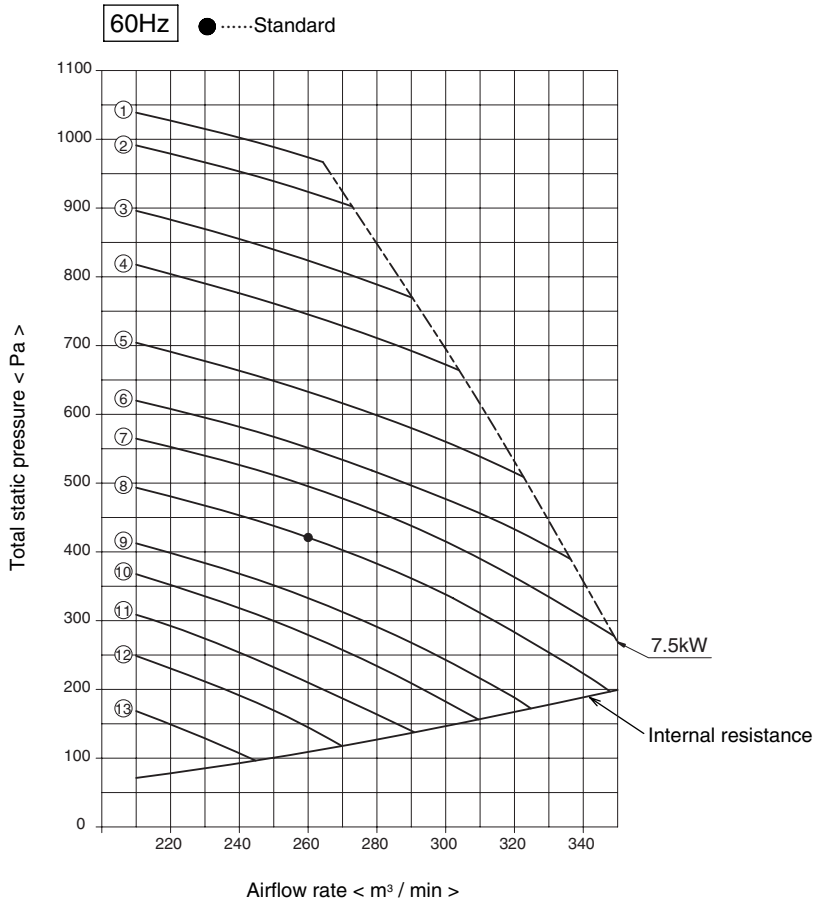

Specification(Pulley , Belt)

Standard(Factory set) <50Hz>

Motor	Motor pulley		Fan pulley		V-belt (H) <mm / in>	Over current relay (Fan motor)
	Nominal diameter (B) <ø>	Bore (E) <ø>	Nominal diameter (B) <ø>	Bore (E) <ø>		
7.5kW	145	38	300	32	1347 / 53	15A

		Motor 7.5kW,1450rpm <50Hz>															
		Motor pulley							Fan pulley								
No.	Rotational speed <rpm>	Outside diameter (A) <ø>	Nominal Diameter (B) <ø>	(C) <ø>	(D) <ø>	Bore (E) <ø>	(F) <mm>	(G) <mm>	Outside diameter (A) <ø>	Nominal Diameter (B) <ø>	(C) <ø>	(D) <ø>	Bore (E) <ø>	(F) <mm>	(G) <mm>	V-belt (H) <mm / in>	Deflection force <N>	Amount of deflection <mm>
①	1193	211	200	181	80	38	41.3	10	254	243	224	70	32	36	10	1321 / 52	23.9	5.0
②	1134	201	190	171	71	38	41.3	10	254	243	224	70	32	36	10	1321 / 52	25.3	5.1
③	1083	235	224	205	80	38	41.3	10	311	300	281	90	32	36	10	1448 / 57	23.3	4.9
④	1025	223	212	193	80	38	41.3	10	311	300	281	90	32	36	10	1448 / 57	24.2	5.1
⑤	976	223	212	193	80	38	41.3	10	326	315	296	90	32	36	10	1448 / 57	24.2	4.8
⑥	918	201	190	171	71	38	41.3	10	311	300	281	90	32	36	10	1423 / 56	25.6	5.1
⑦	875	201	190	171	71	38	41.3	10	326	315	296	90	32	36	10	1423 / 56	26.4	4.8
⑧	822	181	170	151	71	38	41.3	10	311	300	281	90	32	36	10	1372 / 54	28.4	4.9
⑨	773	171	160	141	71	38	41.3	10	311	300	281	90	32	36	10	1372 / 54	29.6	4.9
⑩	725	161	150	131	71	38	41.3	10	311	300	281	90	32	36	10	1347 / 53	31.6	4.8
⑪	701	156	145	126	71	38	41.3	10	311	300	281	90	32	36	10	1347 / 53	32.4	4.9
⑫	653	146	135	116	63	38	41.3	10	311	300	281	90	32	36	10	1347 / 53	34.4	5.0
⑬	621	146	135	116	63	38	41.3	10	326	315	296	90	32	36	10	1347 / 53	35.5	4.7

Note1. Use two V-belts for P750 indoor unit.

Standard <60Hz>

Motor	Motor pulley		Fan pulley		V-belt (H) <mm / in>	Over current relay (Fan motor)
	Nominal diameter (B) <ø>	Bore (E) <ø>	Nominal diameter (B) <ø>	Bore (E) <ø>		
7.5kW	145	38	300	32	1347 / 53	15A

		Motor 7.5kW,1450rpm <50Hz>															
		Motor pulley							Fan pulley								
No.	Rotational speed <rpm>	Outside diameter (A) <ø>	Nominal Diameter (B) <ø>	(C) <ø>	(D) <ø>	Bore (E) <ø>	(F) <mm>	(G) <mm>	Outside diameter (A) <ø>	Nominal Diameter (B) <ø>	(C) <ø>	(D) <ø>	Bore (E) <ø>	(F) <mm>	(G) <mm>	V-belt (H) <mm / in>	Deflection force <N>	Amount of deflection <mm>
①	1178	235	212	193	80	38	41.3	10	326	315	296	90	32	36	10	1474 / 58	22.6	5.0
②	1152	171	160	141	71	38	41.3	10	254	243	224	70	32	36	10	1270 / 50	25.4	5.0
③	1100	201	190	171	71	38	41.3	10	311	300	281	90	32	36	10	1423 / 56	23.3	5.1
④	1056	201	190	171	71	38	41.3	10	326	315	296	90	32	36	10	1423 / 56	24.0	4.8
⑤	992	181	170	151	71	38	41.3	10	311	300	281	90	32	36	10	1372 / 54	25.2	4.9
⑥	944	181	170	151	71	38	41.3	10	326	315	296	90	32	36	10	1372 / 54	25.6	4.6
⑦	(900)	181	170	151	71	38	41.3	10	311	300	281	90	32	36	10	1372 / 54	25.2	4.9
⑧	846	156	145	126	71	38	41.3	10	311	300	281	90	32	36	10	1347 / 53	28.2	4.9
⑨	788	146	135	116	71	38	41.3	10	311	300	281	90	32	36	10	1347 / 53	29.7	5.0
⑩	750	146	135	116	71	38	41.3	10	326	315	296	90	32	36	10	1347 / 53	30.6	4.7
⑪	700	171	160	141	71	38	41.3	10	411	400	381	90	32	36	10	1550 / 61	28.9	4.6
⑫	656	161	150	131	71	38	41.3	10	411	400	381	90	32	36	10	1550 / 61	30.2	4.7
⑬	591	146	135	116	71	38	41.3	10	411	400	381	90	32	36	10	1550 / 61	32.5	4.8

Note1. Use two V-belts for P750 indoor unit.

Note2. Set the scroll damper opening to 2 for the pulley set ⑦. (Factory setting : 0)

Shape of the pulley (unit:mm)

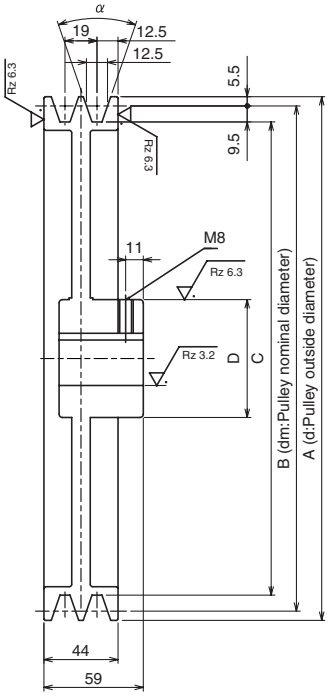

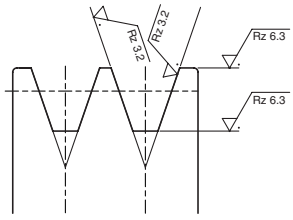

(keyway)

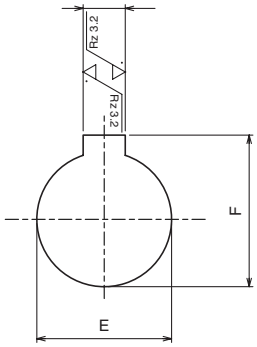

Belt	d_m:Pulley nominal diameter	α
	$d_m \leqq 160$	34°
	$161 < d_m \leqq 200$	36°
	$201 < d_m$	38°

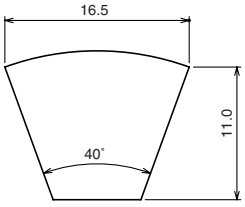

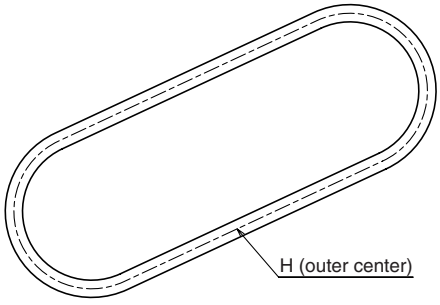

* See p.40 for "How to choose the pulley."

•PFAV-P300VM-E-F

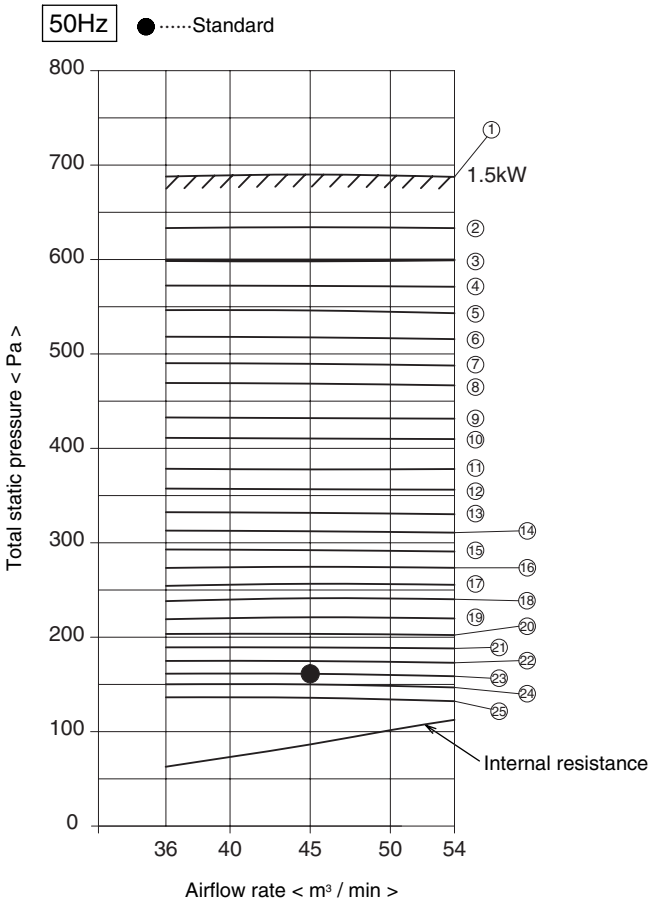

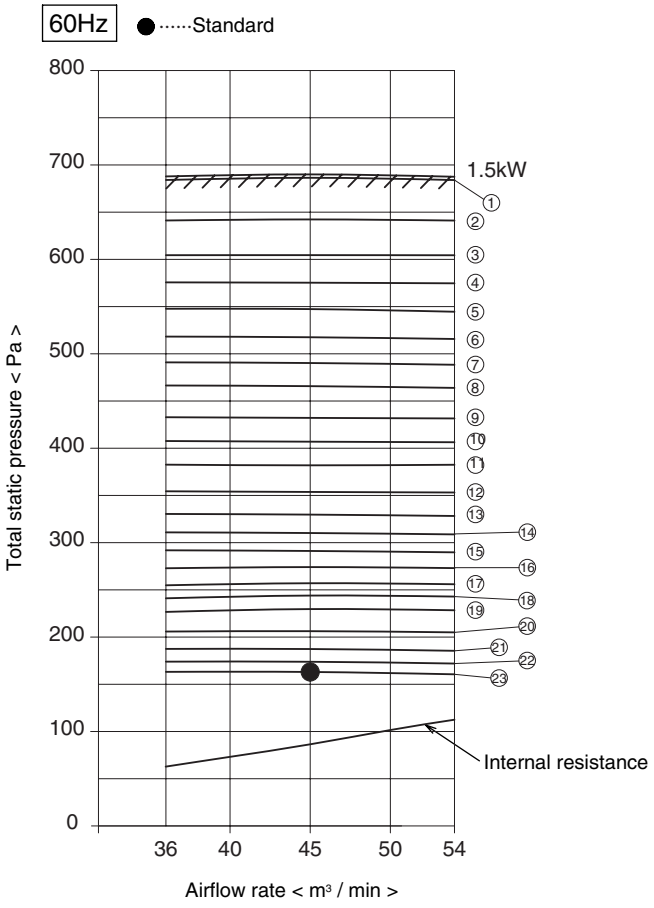

Specification(Pulley , Belt)

Standard(Factory set) <50Hz>

Motor	Motor pulley		Fan pulley		V-belt (H) <mm / in>	Over current relay (Fan motor)
	Pitch diameter (Changeability) <PCø>	Bore <ø>	Nominal diameter (B) <ø>	Bore (E) <ø>		
1.5kW	140	24	280	20	1499 / 59	3.6A

		Motor 1.5kW,1450rpm <50Hz>														
		Motor pulley					Fan pulley									
No.	Rotational speed <rpm>	Outside diameter <ø>	Slide peace Rotation number	Bore (E) <ø>	(F) <mm>	(G) <mm>	Outside diameter (A) <ø>	Nominal Diameter (B) <ø>	(C) <ø>	(D) <ø>	Bore (E) <ø>	(F) <mm>	(G) <mm>	V-belt (H) <mm / in>	Deflection force <N>	Amount of deflection <mm>
①	1600	149	2	24	27.3	8	127	118	102	50	20	23.5	7	1245 / 49	12.8	6.8
②	1538	149	0	24	27.3	8	141	132	116	50	20	23.5	7	1270 / 50	12.1	6.7
③	1497	149	3/4	24	27.3	8	141	132	116	50	20	23.5	7	1270 / 50	12.4	6.8
④	1457	149	1·1/2	24	27.3	8	141	132	116	50	20	23.5	7	1270 / 50	12.6	6.8
⑤	1417	149	2·1/4	24	27.3	8	141	132	116	50	20	23.5	7	1245 / 49	12.9	6.7
⑥	1376	149	3	24	27.3	8	141	132	116	50	20	23.5	7	1245 / 49	13.2	6.7
⑦	1336	149	3·3/4	24	27.3	8	141	132	116	50	20	23.5	7	1245 / 49	13.5	6.8
⑧	1306	149	1	24	27.3	8	159	150	134	56	20	23.5	7	1296 / 51	12.5	6.8
⑨	1259	149	2	24	27.3	8	159	150	134	56	20	23.5	7	1296 / 51	12.8	6.8
⑩	1223	149	2·3/4	24	27.3	8	159	150	134	56	20	23.5	7	1296 / 51	13.3	6.9
⑪	1175	149	3·3/4	24	27.3	8	159	150	134	56	20	23.5	7	1296 / 51	13.7	6.9
⑫	1140	149	4·1/2	24	27.3	8	159	150	134	56	20	23.5	7	1296 / 51	14.1	7.0
⑬	1098	149	3/4	24	27.3	8	189	180	164	56	20	23.5	7	1347 / 53	12.6	6.8
⑭	1059	149	1·3/4	24	27.3	8	189	180	164	56	20	23.5	7	1347 / 53	12.9	6.8
⑮	1019	149	2·3/4	24	27.3	8	189	180	164	56	20	23.5	7	1347 / 53	13.3	6.9
⑯	980	149	3·3/4	24	27.3	8	189	180	164	56	20	23.5	7	1347 / 53	13.7	7.0
⑰	940	149	4·3/4	24	27.3	8	189	180	164	56	20	23.5	7	1347 / 53	14.2	7.0
⑱	906	149	0	24	27.3	8	233	224	196	54	20	23.5	7	1423 / 56	12.7	6.7
⑲	858	149	1·1/2	24	27.3	8	233	224	196	54	20	23.5	7	1423 / 56	13.2	6.8
⑳	819	149	2·3/4	24	27.3	8	233	224	196	54	20	23.5	7	1423 / 56	13.7	6.9
㉑	787	149	3·3/4	24	27.3	8	233	224	196	54	20	23.5	7	1423 / 56	14.2	6.9
㉒	755	149	2·1/4	24	27.3	8	233	224	196	54	20	23.5	7	1423 / 56	13.5	6.9
㉓	725	149	0	24	27.3	8	289	280	234	54	20	23.5	7	1499 / 59	12.8	6.5
㉔	700	149	1	24	27.3	8	289	280	234	54	20	23.5	7	1499 / 59	13.2	6.6
㉕	661	149	2·1/2	24	27.3	8	289	280	234	54	20	23.5	7	1499 / 59	14.2	6.6

Standard <60Hz>

Motor	Motor pulley		Fan pulley		V-belt (H) <mm / in>	Over current relay (Fan motor)
	Pitch diameter (Changeability) <PCø>	Bore <ø>	Nominal diameter (B) <ø>	Bore (E) <ø>		
1.5kW	116.7 (factory set 140)	24	280	20	1499 / 59	3.6A

		Motor 1.5kW,1750rpm <60Hz>														
		Motor pulley					Fan pulley									
No.	Rotational speed <rpm>	Outside diameter <ø>	Slide peace Rotation number	Bore (E) <ø>	(F) <mm>	(G) <mm>	Outside diameter (A) <ø>	Nominal Diameter (B) <ø>	(C) <ø>	(D) <ø>	Bore (E) <ø>	(F) <mm>	(G) <mm>	V-belt (H) <mm / in>	Deflection force <N>	Amount of deflection <mm>
①	1596	149	4	24	27.3	8	141	132	116	50	20	23.5	7	1245 / 49	11.8	6.8
②	1547	149	1·1/2	24	27.3	8	159	150	134	56	20	23.5	7	1296 / 51	11.1	6.8
③	1505	149	2·1/4	24	27.3	8	159	150	134	56	20	23.5	7	1296 / 51	11.3	6.9
④	1462	149	3	24	27.3	8	159	150	134	56	20	23.5	7	1296 / 51	11.7	6.9
⑤	1419	149	3·3/4	24	27.3	8	159	150	134	56	20	23.5	7	1296 / 51	11.9	6.9
⑥	1376	149	4·1/2	24	27.3	8	159	150	134	56	20	23.5	7	1296 / 51	12.2	7.0
⑦	1337	149	1/2	24	27.3	8	189	180	164	56	20	23.5	7	1347 / 53	11.0	6.8
⑧	1302	149	1·1/4	24	27.3	8	189	180	164	56	20	23.5	7	1347 / 53	11.2	6.8
⑨	1254	149	2·1/4	24	27.3	8	189	180	164	56	20	23.5	7	1347 / 53	11.4	6.9
⑩	1218	149	3	24	27.3	8	189	180	164	56	20	23.5	7	1347 / 53	11.7	6.9
⑪	1182	149	3·3/4	24	27.3	8	189	180	164	56	20	23.5	7	1347 / 53	11.9	7.0
⑫	1135	149	4·3/4	24	27.3	8	189	180	164	56	20	23.5	7	1347 / 53	12.3	7.0
⑬	1094	149	0	24	27.3	8	233	224	208	54	20	23.5	7	1423 / 56	11.2	6.7
⑭	1055	149	1	24	27.3	8	233	224	208	54	20	23.5	7	1423 / 56	11.4	6.8
⑮	1017	149	2	24	27.3	8	233	224	208	54	20	23.5	7	1423 / 56	11.7	6.8
⑯	979	149	3	24	27.3	8	233	224	208	54	20	23.5	7	1423 / 56	12.0	6.9
⑰	941	149	4	24	27.3	8	233	224	208	54	20	23.5	7	1423 / 56	12.3	7.0
⑱	912	149	4·3/4	24	27.3	8	233	224	208	54	20	23.5	7	1423 / 56	12.6	7.0
⑲	877	149	3	24	27.3	8	259	250	234	54	20	23.5	7	1474 / 58	12.2	6.9
⑳	825	149	4·1/2	24	27.3	8	259	250	234	54	20	23.5	7	1474 / 58	12.7	7.0
㉑	783	149	3	24	27.3	8	289	280	264	54	20	23.5	7	1499 / 59	12.5	6.7
㉒	753	149	2·1/4	24	27.3	8	289	280	264	54	20	23.5	7	1499 / 59	12.3	6.6
㉓	729	149	4·3/4	24	27.3	8	289	280	264	54	20	23.5	7	1499 / 59	13.2	6.8

Variable-width pulley PC ø table

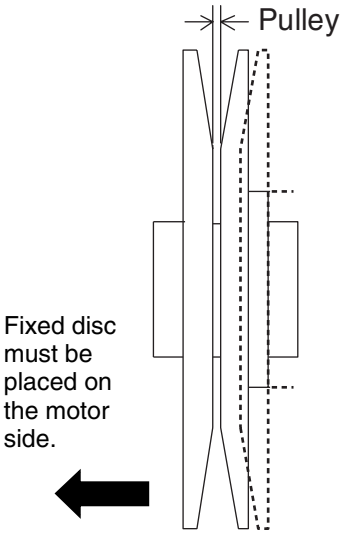

Number of turns to apply	Pulley distance (mm)	PC ø of variable-width pulleys for 2.2kW motor
0	(0)	140.0
1/4	(0.4)	138.8
1/2	(0.8)	137.5
3/4	(1.1)	136.3
1	(1.5)	135.1
1·1/4	(1.9)	133.9
1·1/2	(2.3)	132.6
1·3/4	(2.6)	131.4
2	(3.0)	130.2
2·1/4	(3.4)	129.0
2·1/2	(3.8)	127.7
2·3/4	(4.1)	126.5
3	(4.5)	125.3
3·1/4	(4.9)	124.1
3·1/2	(5.3)	122.8
3·3/4	(5.6)	121.6
4	(6.0)	120.4
4·1/4	(6.4)	119.1
4·1/2	(6.8)	117.9
4·3/4	(7.1)	116.7

Shape of the pulley (unit:mm)

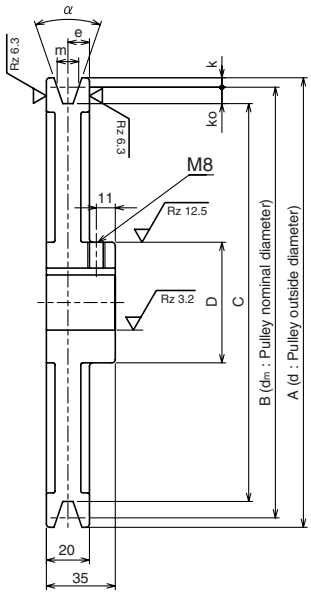

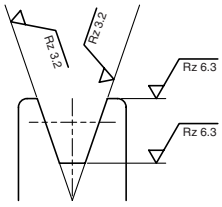

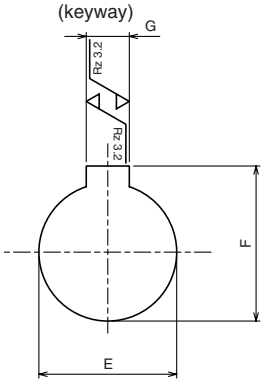

	dm:Pulley nominal diameter	α	m	k	ko	e
Belt	161 < dm ≦200	36°	9.2	4.5	8	10
	201 < dm	38°				

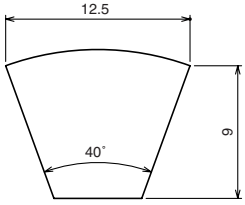

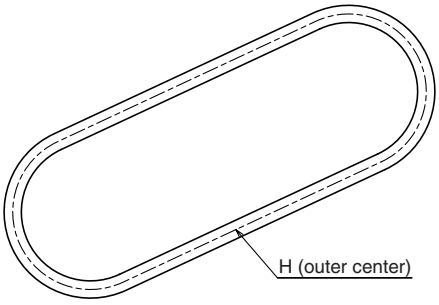

* See p.40 for "How to choose the pulley."

•PFAV-P600VM-E-F

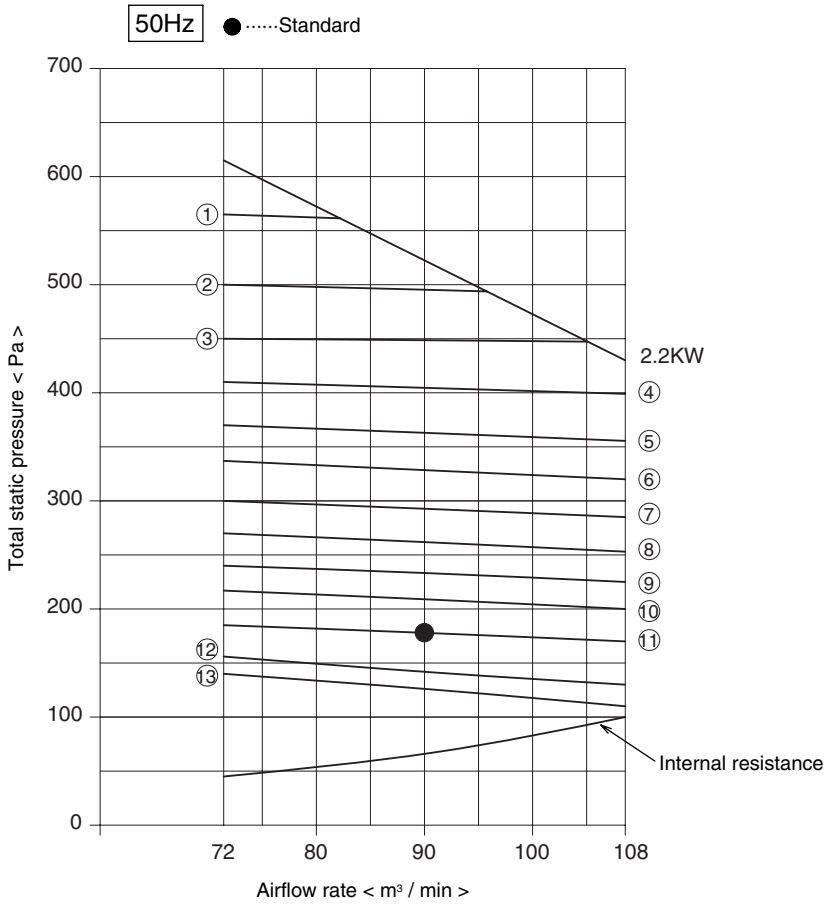

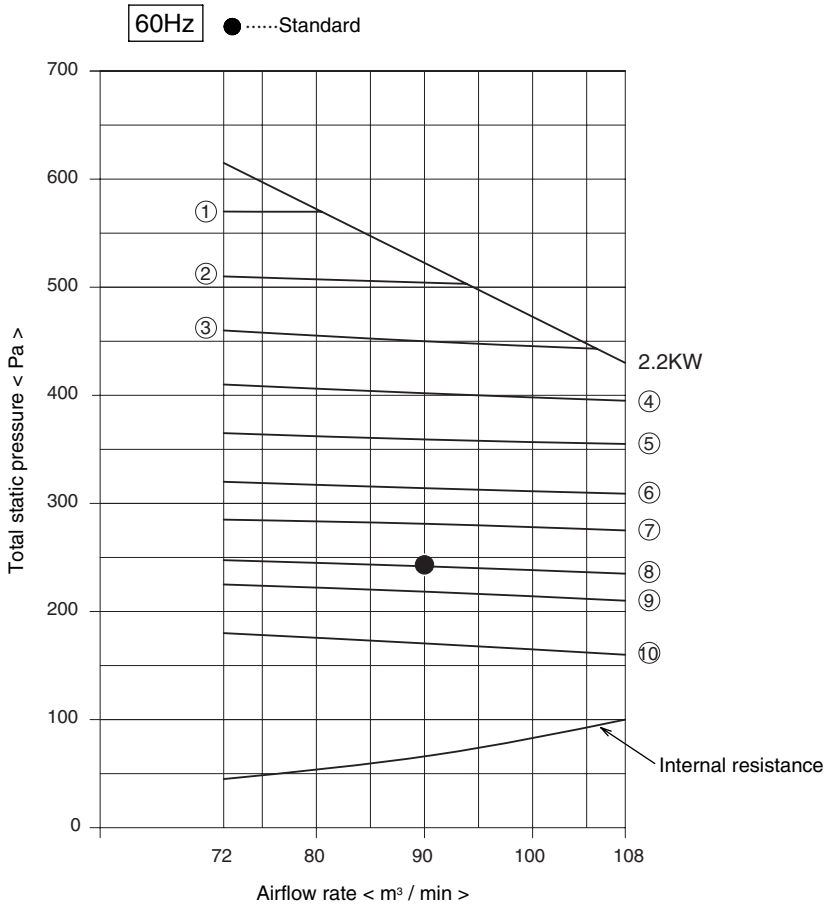

Specification(Pulley , Belt)

Standard(Factory set) <50Hz>

Motor	Motor pulley		Fan pulley		V-belt (H) <mm / in>	Over current relay (Fan motor)
	Nominal diameter (B) <ø>	Bore (E) <ø>	Nominal diameter (B) <ø>	Bore (E) <ø>		
2.2kW	118	28	300	32	1194 / 47	5.0A

		Motor 2.2kW,1450rpm <50Hz>																
		Motor pulley							Fan pulley									
No.	Rotational speed <rpm>	Outside diameter (A) <ø>	Nominal Diameter (B) <ø>	(C) <ø>	(D) <ø>	Bore (E) <ø>	(F) <mm>	(G) <mm>	Outside diameter (A) <ø>	Nominal Diameter (B) <ø>	(C) <ø>	(D) <ø>	Bore (E) <ø>	(F) <mm>	(G) <mm>	V-belt (H) <mm / in>	Deflection force <N>	Amount of deflection <mm>
①	1016	129	118	99	56	28	31.3	8	181	170	151	63	32	36	10	966 / 38	21.3	4.1
②	961	129	118	99	56	28	31.3	8	191	180	161	63	32	36	10	991 / 39	21.3	4.1
③	911	129	118	99	56	28	31.3	8	201	190	171	63	32	36	10	1016 / 40	21.7	4.2
④	866	129	118	99	56	28	31.3	8	211	200	181	63	32	36	10	1016 / 40	21.7	4.0
⑤	817	129	118	99	56	28	31.3	8	223	212	193	63	32	36	10	1042 / 41	22.3	4.0
⑥	774	129	118	99	56	28	31.3	8	235	224	205	63	32	36	10	1067 / 42	22.3	4.1
⑦	735	129	118	99	56	28	31.3	8	247	236	217	63	32	36	10	1093 / 43	22.7	4.1
⑧	694	129	118	99	56	28	31.3	8	261	250	231	71	32	36	10	1118 / 44	22.7	4.1
⑨	657	136	125	106	56	28	31.3	8	291	280	261	71	32	36	10	1169 / 46	22.3	3.9
⑩	621	129	118	99	56	28	31.3	8	291	280	261	71	32	36	10	1169 / 46	23.4	3.9
⑪	580	129	118	99	56	28	31.3	8	311	300	281	71	32	36	10	1194 / 47	24.2	3.8
⑫	521	136	125	106	56	28	31.3	8	366	355	336	71	32	36	10	1372 / 54	23.8	4.2
⑬	492	129	118	99	56	28	31.3	8	366	355	336	71	32	36	10	1347 / 53	25.8	4.0

Standard <60Hz>

Motor	Motor pulley		Fan pulley		V-belt (H) <mm / in>	Over current relay (Fan motor)
	Nominal diameter (B) <ø>	Bore (E) <ø>	Nominal diameter (B) <ø>	Bore (E) <ø>		
2.2kW	118	28	300	32	1194 / 47	5.0A

		Motor 5.5kW,1750rpm <60Hz>																
		Motor pulley							Fan pulley									
No.	Rotational speed <rpm>	Outside diameter (A) <ø>	Nominal Diameter (B) <ø>	(C) <ø>	(D) <ø>	Bore (E) <ø>	(F) <mm>	(G) <mm>	Outside diameter (A) <ø>	Nominal Diameter (B) <ø>	(C) <ø>	(D) <ø>	Bore (E) <ø>	(F) <mm>	(G) <mm>	V-belt (H) <mm / in>	Deflection force <N>	Amount of deflection <mm>
①	1023	129	118	99	56	28	31.3	8	211	200	181	63	32	36	10	1016 / 40	18.7	4.0
②	964	129	118	99	56	28	31.3	8	223	212	193	63	32	36	10	1042 / 41	19.3	4.0
③	912	129	118	99	56	28	31.3	8	235	224	205	63	32	36	10	1067 / 42	19.3	4.1
④	865	129	118	99	56	28	31.3	8	247	236	217	71	32	36	10	1093 / 43	19.6	4.1
⑤	816	129	118	99	56	28	31.3	8	261	250	231	71	32	36	10	1118 / 44	19.6	4.1
⑥	771	136	125	106	56	28	31.3	8	291	280	261	71	32	36	10	1169 / 46	19.4	3.9
⑦	728	129	118	99	56	28	31.3	8	291	280	261	71	32	36	10	1169 / 46	20.2	3.9
⑧	678	129	118	99	56	28	31.3	8	311	300	281	71	32	36	10	1194 / 47	20.8	3.8
⑨	646	129	118	99	56	28	31.3	8	326	315	296	71	32	36	10	1245 / 49	20.8	3.9
⑩	572	129	118	99	56	28	31.3	8	366	355	336	71	32	36	10	1347 / 53	22.2	4.0

Shape of the pulley (unit:mm)

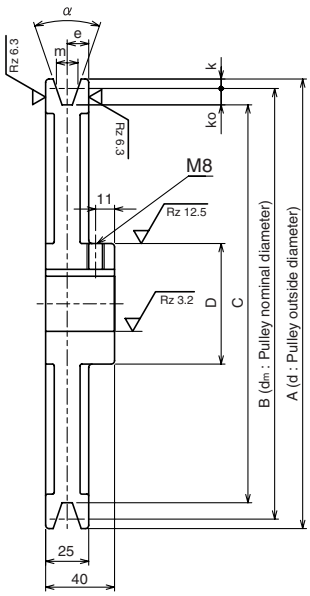

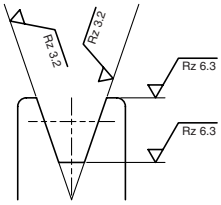

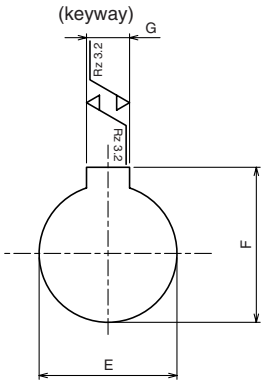

	dm:Pulley nominal diameter	α	m	k	ko	e
Belt	dm ≦ 160	34°	12.5	5.5	9.5	12.5
	161 < dm ≦200	36°				
	201 < dm	38°				

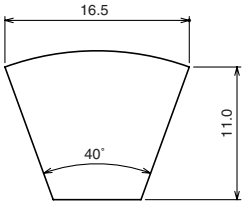

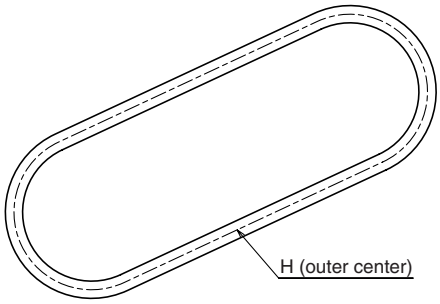

* See p.40 for "How to choose the pulley."

•PFAV-P900VM-E-F

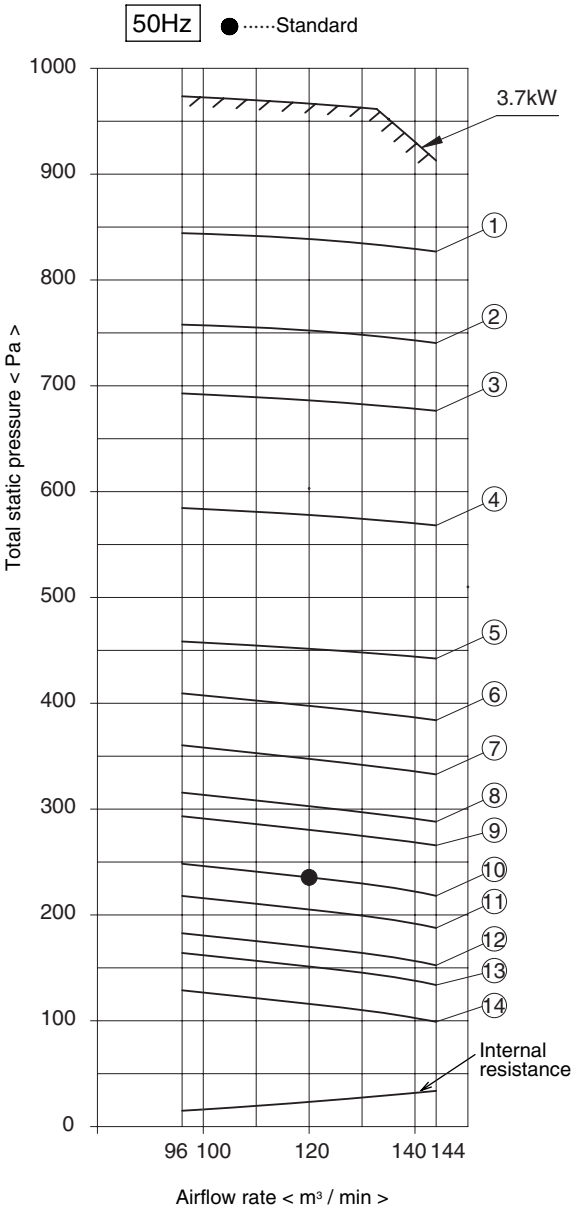

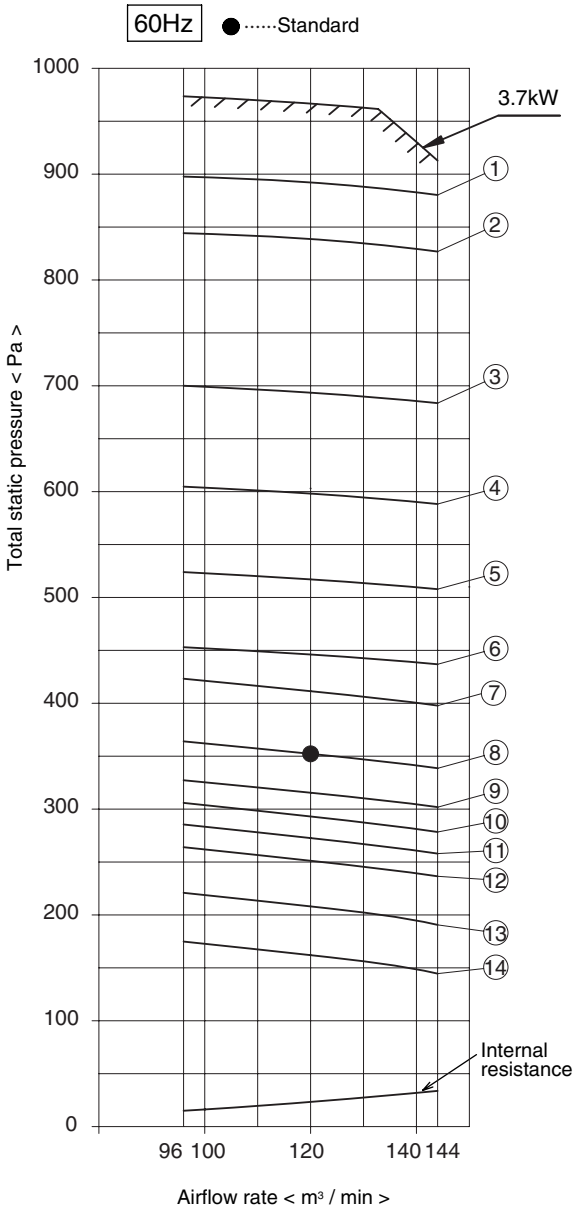

Specification(Pulley , Belt)

Standard(Factory set) <50Hz>

Motor	Motor pulley		Fan pulley		V-belt (H) <mm / in>	Over current relay (Fan motor)
	Nominal diameter (B) <ø>	Bore (E) <ø>	Nominal diameter (B) <ø>	Bore (E) <ø>		
3.7kW	125	28	315	32	1423 / 56	7.5A

		Motor 3.7kW,1450rpm <50Hz>																
		Motor pulley							Fan pulley									
No.	Rotational speed <rpm>	Outside diameter (A) <ø>	Nominal Diameter (B) <ø>	(C) <ø>	(D) <ø>	Bore (E) <ø>	(F) <mm>	(G) <mm>	Outside diameter (A) <ø>	Nominal Diameter (B) <ø>	(C) <ø>	(D) <ø>	Bore (E) <ø>	(F) <mm>	(G) <mm>	V-belt (H) <mm / in>	Deflection force <N>	Amount of deflection <mm>
①	1025	223	212	193	80	28	31.3	8	311	300	281	80	32	36	10	1474 / 58	14.5	5.3
②	976	223	212	193	80	28	31.3	8	326	315	296	90	32	36	10	1474 / 58	14.5	5.0
③	(940)	223	212	193	80	28	31.3	8	326	315	296	90	32	36	10	1474 / 58	14.5	5.0
④	875	201	190	171	71	28	31.3	8	326	315	296	90	32	36	10	1448 / 57	15.2	5.0
⑤	783	181	170	151	71	28	31.3	8	326	315	296	90	32	36	10	1423 / 56	15.8	5.0
⑥	737	171	160	141	71	28	31.3	8	326	315	296	90	32	36	10	1423 / 56	16.5	5.1
⑦	690	161	150	131	71	28	31.3	8	326	315	296	90	32	36	10	1423 / 56	17.2	5.2
⑧	644	151	140	121	71	28	31.3	8	326	315	296	90	32	36	10	1423 / 56	17.9	5.3
⑨	621	146	135	116	71	28	31.3	8	326	315	296	90	32	36	10	1423 / 56	18.4	5.3
⑩	575	136	125	106	63	28	31.3	8	326	315	296	90	32	36	10	1423 / 56	19.4	5.4
⑪	544	161	150	131	71	28	31.3	8	411	400	381	90	32	36	10	1550 / 61	18.7	4.7
⑫	508	151	140	121	71	28	31.3	8	411	400	381	90	32	36	10	1550 / 61	19.6	4.8
⑬	489	146	135	116	63	28	31.3	8	411	400	381	90	32	36	10	1550 / 61	20.1	4.8
⑭	453	136	125	106	63	28	31.3	8	411	400	381	90	32	36	10	1550 / 61	21.2	4.9

Note1. Use two V-belts for P900 indoor unit.

Note2. Set the scroll damper opeing to 5 for the pulley set ③. (Factory setting : 0)

Standard <60Hz>

Motor	Motor pulley		Fan pulley		V-belt (H) <mm / in>	Over current relay (Fan motor)
	Nominal diameter (B) <ø>	Bore (E) <ø>	Nominal diameter (B) <ø>	Bore (E) <ø>		
3.7kW	125	38	315	32	1423 / 56	7.5A

		Motor 3.7kW,1750rpm <60Hz>																
		Motor pulley							Fan pulley									
No.	Rotational speed <rpm>	Outside diameter (A) <ø>	Nominal Diameter (B) <ø>	(C) <ø>	(D) <ø>	Bore (E) <ø>	(F) <mm>	(G) <mm>	Outside diameter (A) <ø>	Nominal Diameter (B) <ø>	(C) <ø>	(D) <ø>	Bore (E) <ø>	(F) <mm>	(G) <mm>	V-belt (H) <mm / in>	Deflection force <N>	Amount of deflection <mm>
①	1056	201	190	171	71	28	31.3	8	326	315	296	90	32	36	10	1448 / 57	14.7	5.0
②	(1025)	201	190	171	71	28	31.3	8	326	315	296	90	32	36	10	1448 / 57	14.7	5.0
③	944	181	170	151	71	28	31.3	8	326	315	296	90	32	36	10	1423 / 56	14.9	5.0
④	889	171	160	141	71	28	31.3	8	326	315	296	90	32	36	10	1423 / 56	15.3	5.1
⑤	833	161	150	131	71	28	31.3	8	326	315	296	90	32	36	10	1423 / 56	15.6	5.2
⑥	778	151	140	121	71	28	31.3	8	326	315	296	90	32	36	10	1423 / 56	16.1	5.3
⑦	750	146	135	116	63	28	31.3	8	326	315	296	90	32	36	10	1423 / 56	16.4	5.3
⑧	694	136	125	106	63	28	31.3	8	326	315	296	90	32	36	10	1423 / 56	17.1	5.4
⑨	656	161	150	131	71	28	31.3	8	411	400	381	90	32	36	10	1550 / 61	16.9	4.7
⑩	634	156	145	126	71	28	31.3	8	411	400	381	90	32	36	10	1550 / 61	17.2	4.7
⑪	613	151	140	121	71	28	31.3	8	411	400	381	90	32	36	10	1550 / 61	17.5	4.8
⑫	591	146	135	116	63	28	31.3	8	411	400	381	90	32	36	10	1550 / 61	17.8	4.8
⑬	547	136	125	106	63	28	31.3	8	411	400	381	90	32	36	10	1550 / 61	18.6	4.9
⑭	(500)	136	125	106	63	28	31.3	8	411	400	381	90	32	36	10	1551 / 61	18.6	4.9

Note1. Use two V-belts for P900 indoor unit.

Note2. Set the scroll damper opeing to 5 for the pulley set ②. (Factory setting : 0)

Note3. Note2. Set the scroll damper opeing to 5 for the pulley set ⑭. (Factory setting : 0)

Shape of the pulley (unit:mm)

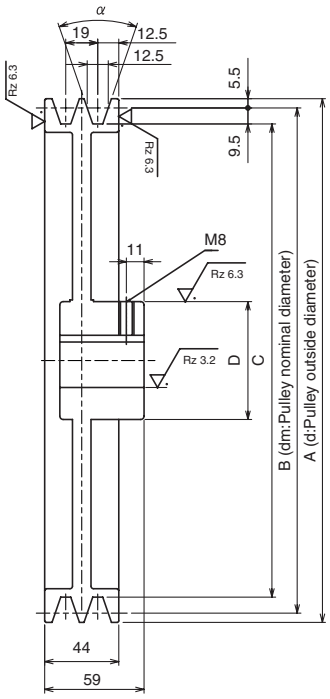

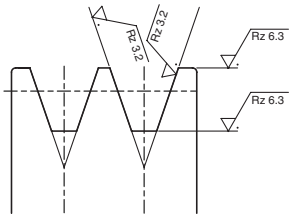

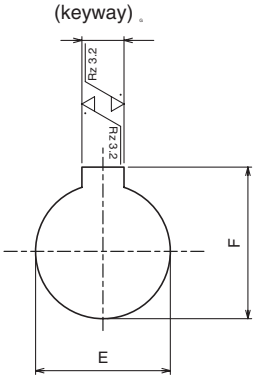

Belt	dm:Pulley nominal diameter	α
	dm ≦ 160	34°
	161 < dm ≦200	36°
	201 < dm	38°

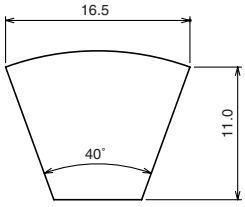

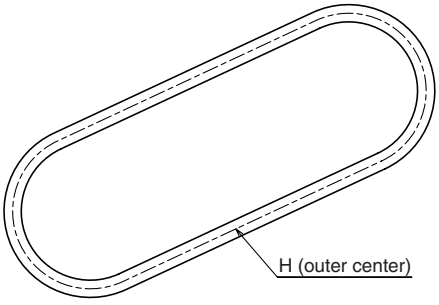

* See p.40 for "How to choose the pulley."

How to choose the pulley

(EXAMPLE)

Indoor unit : PFAV-P750VM-E (50Hz)
Required external static pressure : 600 Pa
Required air flow rate : 250m³/min

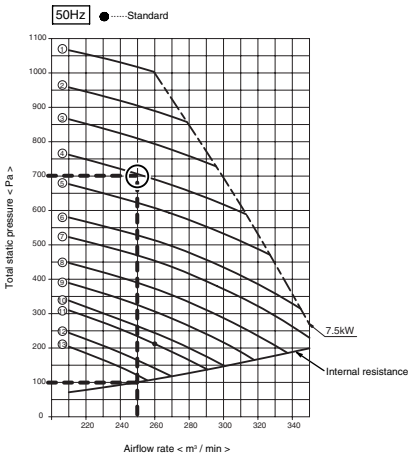

The fan characteristic curve shows the internal resistance is 100 Pa when the air flow rate is 250m³/min.

Total static pressure =
internal resistance + external static pressure
=100 Pa + 600 Pa
=700 Pa

Read the intersection point of the total static pressure 700 Pa and the air flow rate 250m³/min in the fan characteristic curve. You will see that the set of pulleys No.4 is suitable under the condition.

The left table shows the details of appropriate pulley combinations.

Motor pulley : ø212-B-2-38
Fan pulley : ø300-B-2-32
V-belt : B57/1448 mm

		Motor 7.5kW,1450rpm <50Hz>																
		Motor pulley							Fan pulley									
No.	Rotational speed <rpm>	Outside diameter (A) <ø>	Nominal Diameter (B) <ø>	(C) <ø>	(D) <ø>	Bore (E) <ø>	(F) <mm>	(G) <mm>	Outside diameter (A) <ø>	Nominal Diameter (B) <ø>	(C) <ø>	(D) <ø>	Bore (E) <ø>	(F) <mm>	(G) <mm>	V-belt (H) <mm / in>	Deflection force	Amount of Deflection
①	1193	211	200	181	80	38	41.3	10	254	243	224	70	32	36	10	1321 / 52	23.9	5.0
②	1134	201	190	171	71	38	41.3	10	254	243	224	70	32	36	10	1321 / 52	25.3	5.1
③	[illegible]	[illegible]	[illegible]	[illegible]	[illegible]	[illegible]	[illegible]	[illegible]	[illegible]	[illegible]	[illegible]	[illegible]	[illegible]	[illegible]	[illegible]	[illegible]	[illegible]	[illegible]
④	1025	223	212	193	80	38	41.3	10	311	300	281	90	32	36	10	1448 / 57	24.2	5.1
⑤	[illegible]	[illegible]	[illegible]	[illegible]	[illegible]	[illegible]	[illegible]	[illegible]	[illegible]	[illegible]	[illegible]	[illegible]	[illegible]	[illegible]	[illegible]	[illegible]	[illegible]	[illegible]
⑥	918	201	190	171	71	38	41.3	10	311	300	281	90	32	36	10	1423 / 56	25.6	5.1
⑦	875	201	190	171	71	38	41.3	10	326	315	296	90	32	36	10	1423 / 56	26.4	4.8
⑧	822	181	170	151	71	38	41.3	10	311	300	281	90	32	36	10	1372 / 54	28.4	4.9
⑨	773	171	160	141	71	38	41.3	10	311	300	281	90	32	36	10	1372 / 54	29.6	4.9
⑩	725	161	150	131	71	38	41.3	10	311	300	281	90	32	36	10	1347 / 53	31.6	4.8
⑪	701	156	145	126	71	38	41.3	10	311	300	281	90	32	36	10	1347 / 53	32.4	4.9
⑫	653	146	135	116	63	38	41.3	10	311	300	281	90	32	36	10	1347 / 53	34.4	5.0
⑬	621	146	135	116	63	38	41.3	10	326	315	296	90	32	36	10	1347 / 53	35.5	4.7

Note1. Use two V-belts for P750 indoor unit.

Note 1. When replacing the motor on site, reset the thermal relay accordingly.
Note 2. Mitsubishi Electric shall not be held responsible for the pulley or motor modified on site.

8. Optional parts

(1) Plenum chamber

PAC-CC83PL-E
For P250 indoor unit

mm

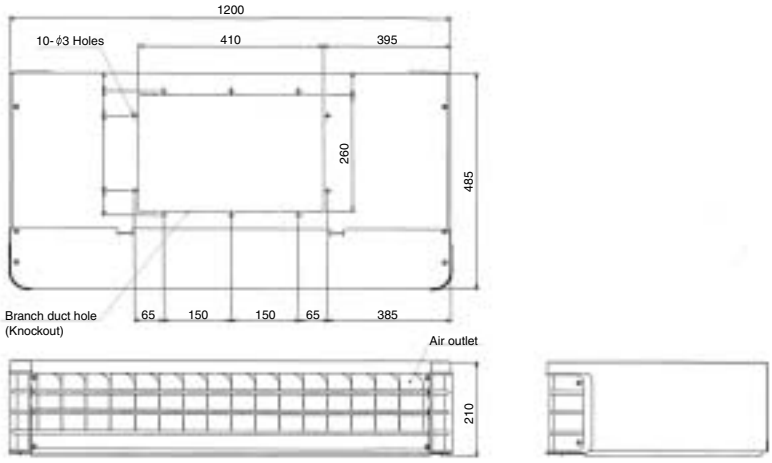

PAC-CC85PL-E
For P500 indoor unit

mm

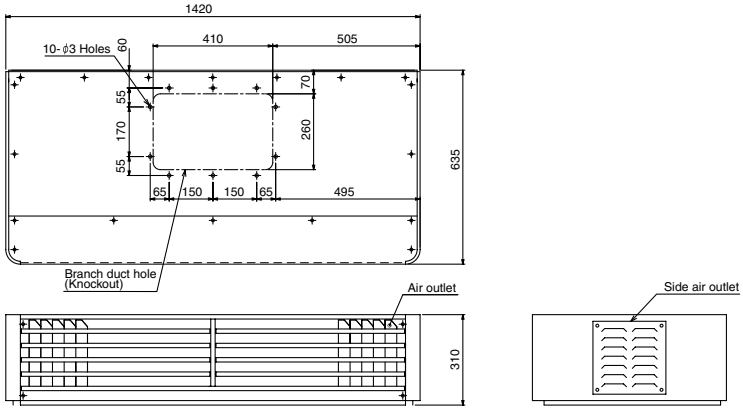

PAC-CC87PL-E
For P750 indoor unit

mm

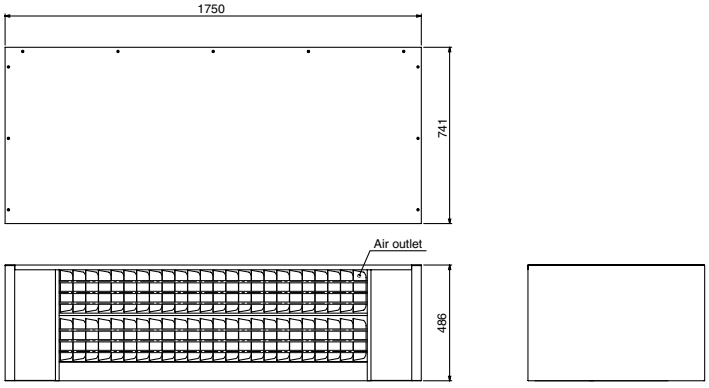

Note: The assembly operation is necessary for this plenum.
This is assembled plenum externals size.

Note 1. The external static pressure in the plenum chamber is 30 Pa.
When the plenum chamber is used, an adjustment of the pully is required.
Note 2. The plenum chamber is not interchangeable with the Fresh air intake type.
Note 3. Largely changing the louver angle may result in condensing or capacity shortage of the unit.
Keep the louver angle within the range of 20˚C from horizontal and vertical standard.

Ⅲ. Outdoor Unit

1. Specifications

Model			PUHY-P250YHM-A	PUHY-P500YSHM-A		PUHY-P750YSHM-A	
Power source			3-phase 4-wire 380-400-415V 50/60Hz				
Sound pressure level (measured in anechoic room)		dB <A>	57	60		63.5	
Refrigerant piping diameter	Liquid pipe	mm(in.)	9.52 (3/8) Brazed (12.7 (1/2) Brazed,total length>=90m)	15.88 (5/8) Brazed		19.05 (3/4) Brazed	
	Gas pipe	mm(in.)	22.2 (7/8) Brazed	28.58 (1-1/8) Brazed		34.93 (1-3/8) Brazed	
Set Model			–	PUHY-P250YHM-A	PUHY-P250YHM-A	PUHY-P350YHM-A	PUHY-P400YHM-A
FAN	Type x Quantity		Propeller fan x 1	Propeller fan x 1	Propeller fan x 1	Propeller fan x 1	Propeller fan x 1
	Air flow rate	m^3 / min	185	185	185	225	225
		L/s	3,083	3,083	3,083	3,750	3,750
		cfm	6,532	6,532	6,532	7,945	7,945
	Control, Driving mechanism		Inverter-control, Direct-driven by motor	Inverter-control, Direct-driven by motor	Inverter-control, Direct-driven by motor	Inverter-control, Direct-driven by motor	Inverter-control, Direct-driven by motor
	Motor output	kW	0.46 x 1	0.46 x 1	0.46 x 1	0.46 x 1	0.46 x 1
	External static press.		0Pa(0mmH2O)	0Pa(0mmH2O)	0Pa(0mmH2O)	0Pa(0mmH2O)	0Pa(0mmH2O)
Compressor	Type x Quantity		Inverter scroll hermetic compressor				
	Manufacture		MITSUBISHI ELECTRIC CORPORATION				
	Starting method		Inverter	Inverter	Inverter	Inverter	Inverter
	Motor output	kW	6.7	6.7	6.7	10.3	10.5
	Case heater	kW	0.035	0.035	0.035	0.045	0.045
	Lubricant		MEL32	MEL32	MEL32	MEL32	MEL32
External finish			Pre-coated galvanized steel sheets <MUNSELL 5Y 8/1 or similar>				
External dimension HxWxD		mm	1710(without legs 1650) x920x760	1710(without legs 1650) x920x760	1710(without legs 1650) x920x760	1710(without legs 1650) x1,220x760	1710(without legs 1650) x1,220x760
		in.	67-3/8(without legs 65) x36-1/4x29-15/16	67-3/8(without legs 65) x36-1/4x29-15/16	67-3/8(without legs 65) x36-1/4x29-15/16	67-3/8(without legs 65) x48-1/16x29-15/16	67-3/8(without legs 65) x48-1/16x29-15/16
Protection devices	High pressure protection		High pres. Sensor & High pres. Switch at 4.15 MPa (601psi)	High pres. Sensor & High pres. Switch at 4.15 MPa (601psi)	High pres. Sensor & High pres. Switch at 4.15 MPa (601psi)	High pres. Sensor & High pres. Switch at 4.15 MPa (601psi)	High pres. Sensor & High pres. Switch at 4.15 MPa (601psi)
	Inverter circuit (COMP. / FAN)		Over-heat protection, Over-current protection	Over-heat protection, Over-current protection	Over-heat protection, Over-current protection	Over-heat protection, Over-current protection	Over-heat protection, Over-current protection
	Compressor		Over-heat protection	Over-heat protection	Over-heat protection	Over-heat protection	Over-heat protection
	Fan motor		Thermal switch	Thermal switch	Thermal switch	Thermal switch	Thermal switch
Refrigerant	Type x original charge		R410A x 9.0 kg (20lb)	R410A x 9.0 kg (20lb)	R410A x 9.0 kg (20lb)	R410A x 11.5 kg (26lb)	R410A x 11.5 kg (26lb)
	Control		LEV and HIC circuit	LEV and HIC circuit		LEV and HIC circuit	
Net weight		kg(lbs)	200 (441)	200 (441)	200 (441)	245 (541)	245 (541)
Heat exchanger			Salt-resistant cross fin & copper tube	Salt-resistant cross fin & copper tube		Salt-resistant cross fin & copper tube	
HIC circuit (HIC: Heat Inter-Changer)			Copper pipe,pipe-in-pipe structure	Copper pipe,pipe-in-pipe structure		Copper pipe,pipe-in-pipe structure	
Pipe between unit and distributor	Liquid pipe	mm(in)	–	9.52 (3/8) Brazed	9.52 (3/8) Brazed	12.7 (1/2) Brazed	15.88 (5/8) Brazed
	Gas pipe	mm(in)	–	22.7 (7/8) Brazed	22.7 (7/8) Brazed	28.58 (1-1/8) Brazed	28.58 (1-1/8) Brazed
Defrosting method			Auto-defrost mode (Reversed refrigerant circle)	Auto-defrost mode (Reversed refrigerant circle)		Auto-defrost mode (Reversed refrigerant circle)	
Drawing	External		WKB94G531	WKB94G533		WKB94G535	
	Wiring		WKE94C140	WKE94C140	WKE94C140	WKE94C140	WKE94C140
Standard attachment	Document		Installation Manual	Installation Manual		Installation Manual	
	Accessory		Refrigerant conn. pipe	Refrigerant conn. pipe		Refrigerant conn. pipe	
Optional parts			–	Outdoor Twinning Kit : CMY-Y100VBK2		Outdoor Twinning Kit : CMY-Y200VBK2	
Remark			•Details on foundation work, duct work, insulation work, electrical wiring, power source switch, and other items shall be referred to the Installation Manual.				

Note :

* Due to continuing improvement, above specifications may be subject to change without notice.
* External static pressure option is available (30Pa, 60Pa / 3.06mmH2O, 6.12mmH2O).

Unit converter	
kcal	=kW x 860
BTU/h	=kW x 3,412
cfm	=m^3/min x 35.31
lb	=kg / 0.4536

*Above specification data is subject to rounding variation.

2. External dimensions

•PUHY-P250YHM-A(-BS)

Unit:mm

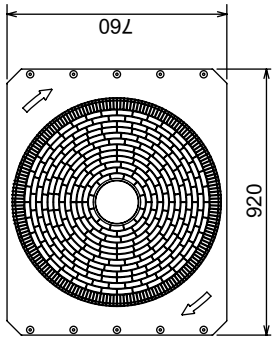

Top view

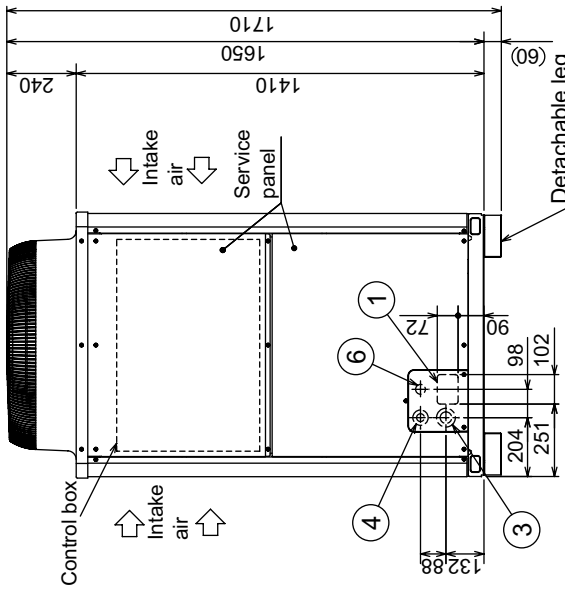

Front view

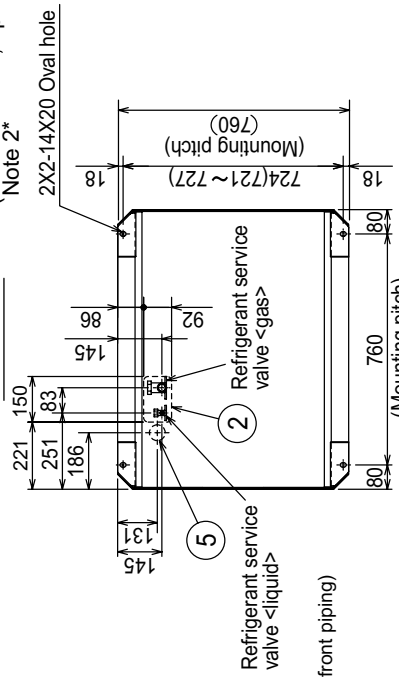

Bottom view

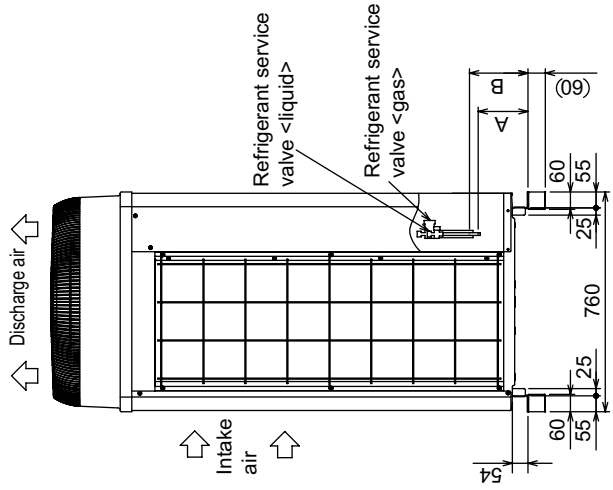

Left side view

<Accessories>

●Connecting pipe

<Gas> ·Elbow(ID25.4XOD25.4)···P250 1pc.
·Pipe (ID25.4XOD22.2) ··· P250 1pc.

<Liquid> ·Pipe (ID9.52XOD9.52) ··· P250 1pc.

Note1. Please refer to the next page for information regarding necessary spacing around the unit and foundation work.
2. The detachable leg can be removed at site.
3. At brazing of pipes, wrap the refrigerant service valve with wet cloth and keep the temperature of refrigerant service valve under 120°C.

NO.	Usage		Specifications
①	For pipes	Front through hole	102X72 Knockout hole
②		Bottom through hole	150X92 Knockout hole
③	For wires	Front through hole	ø65 or ø40 Knockout hole
④		Front through hole	ø52 or ø27 Knockout hole
⑤		Bottom through hole	ø52 Knockout hole
⑥	For transmission cables	Front through hole	ø34 Knockout hole

Connecting pipe specifications

Model	Position dimensions for the refrigerant service valve		Connection specifications for the refrigerant service valve *1	
	Liquid	Gas	Liquid	Gas
	A	B		
PUHY-P250YHM	142	172	ø9.52 Brazed (ø12.7 Brazed)*2	ø22.2 Brazed

*1 Connect by using the connecting pipes (for bottom piping and front piping) that are supplied.
*2 Total length >=90m [295ft]

•PUHY-P350,400YHM-A

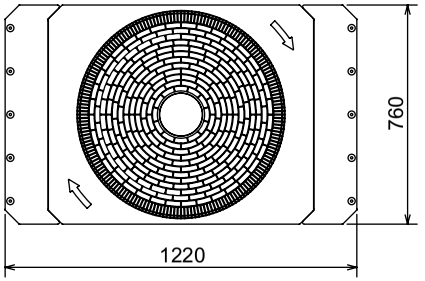

Top view

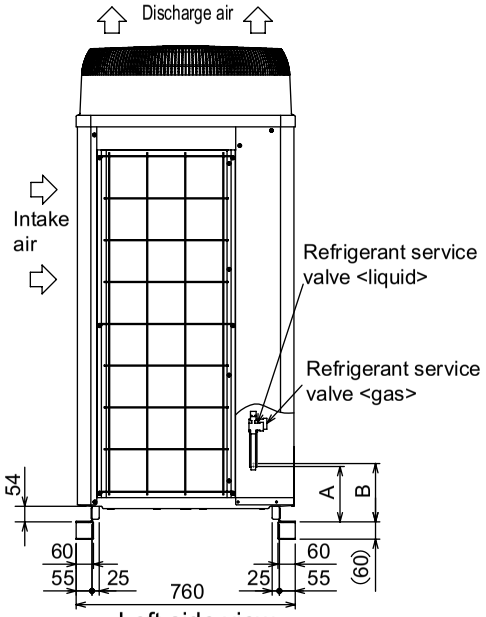

Left side view

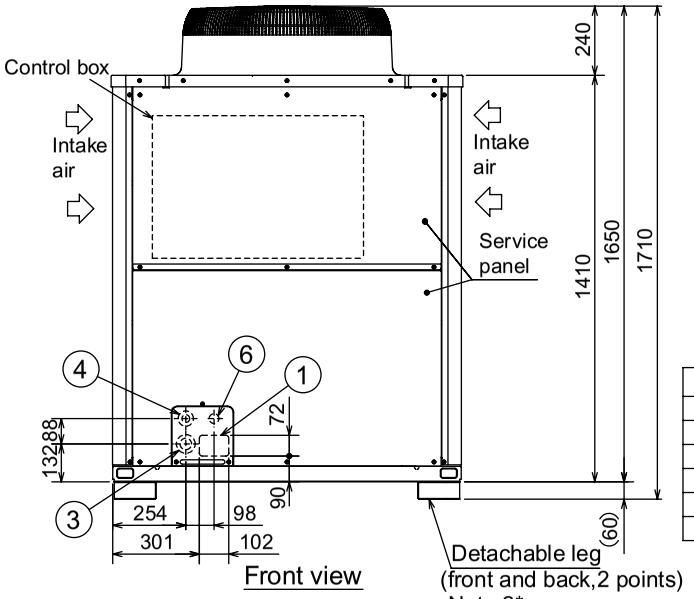

Front view

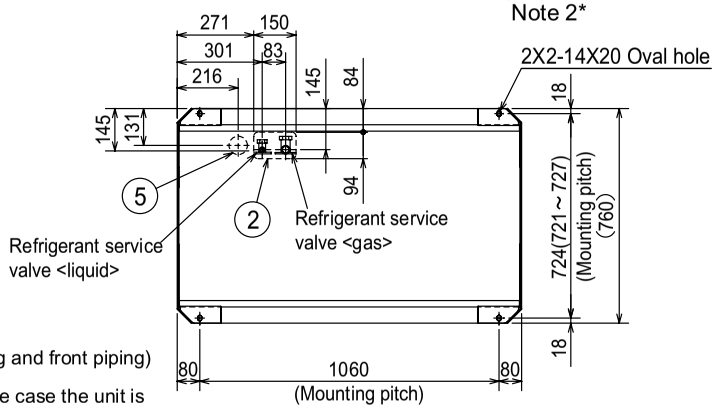

Bottom view

<Accessories>

●Connecting pipe

<Gas> ·Elbow(ID25.4XOD25.4) ···P350,P400 1pc.
·Pipe (ID25.4XOD28.58) ···P350,P400 1pc.

<Liquid> ·Pipe (ID15.88XOD15.88) ···P350,P400 1pc.
·Pipe (ID15.88XOD12.7) ···P350,P400 1pc.

Note1.Please refer to the next page for information regarding necessary spacing around the unit and foundation work.
2.The detachable leg can be removed at site.
3.At brazing of pipes,wrap the refrigerant service valve with wet cloth and keep the temperature of refrigerant service valve under 120˚C.

NO.	Usage		Specifications
①	For pipes	Front through hole	102X72 Knockout hole
②		Bottom through hole	150X94 Knockout hole
③	For wires	Front through hole	ø65 or ø40 Knockout hole
④		Front through hole	ø52 or ø27 Knockout hole
⑤		Bottom through hole	ø65 Knockout hole
⑥	For transmission cables	Front through hole	ø34 Knockout hole

Connecting pipe specifications

Model	Position dimensions for the refrigerant service valve		Connection specifications for the refrigerant service valve *1	
	Liquid	Gas	Liquid	Gas
	A	B		
PUHY-P350YHM	158	172	ø12.7 Brazed	ø28.58 Brazed
PUHY-P400YHM			ø12.7 Brazed (ø15.88 Brazed) *2	

*1 Connect by using the connecting pipes (for bottom piping and front piping) that are supplied.
*2 Indicates dimensions and connection specifications in the case the unit is used in combination with other outdoor units.

Unit:mm

•PUHY-P500YSHM-A(-BS)

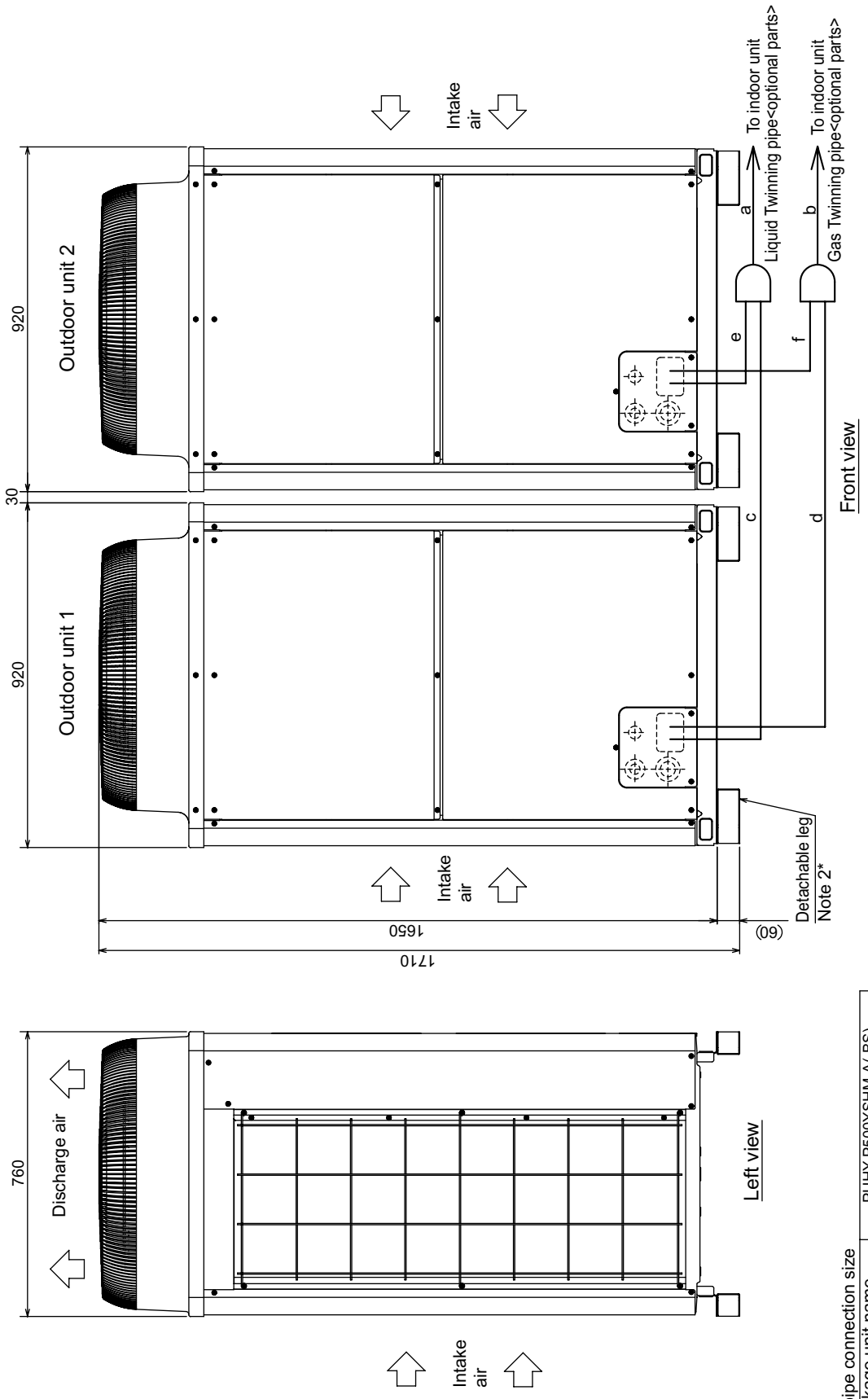

	Unit model	Liquid	Gas
Twinning pipe ~ Outdoor unit	P250	c or e ø9.52	d or f ø22.2

Twinning pipe connection size

Package unit name			PUHY-P500YSHM-A(-BS)
Component unit name	Outdoor unit 1		PUHY-P250YHM-A(-BS)
	Outdoor unit 2		PUHY-P250YHM-A(-BS)
Outdoor Twinning Kit(optional parts)			CMY-Y100VBK2
Indoor unit~ Twinning pipe	Liquid	a	ø15.88
	Gas	b	ø28.58

Note 1.Connect the pipes as shown in the figure above. Refer to the table above for the pipe size.
2.The detachable leg can be removed at site.
3.Twinning pipes should not be tilted more than 15 degrees from the ground.See the Installation Manual for details.

•PUHY-P750YSHM-A(-BS)

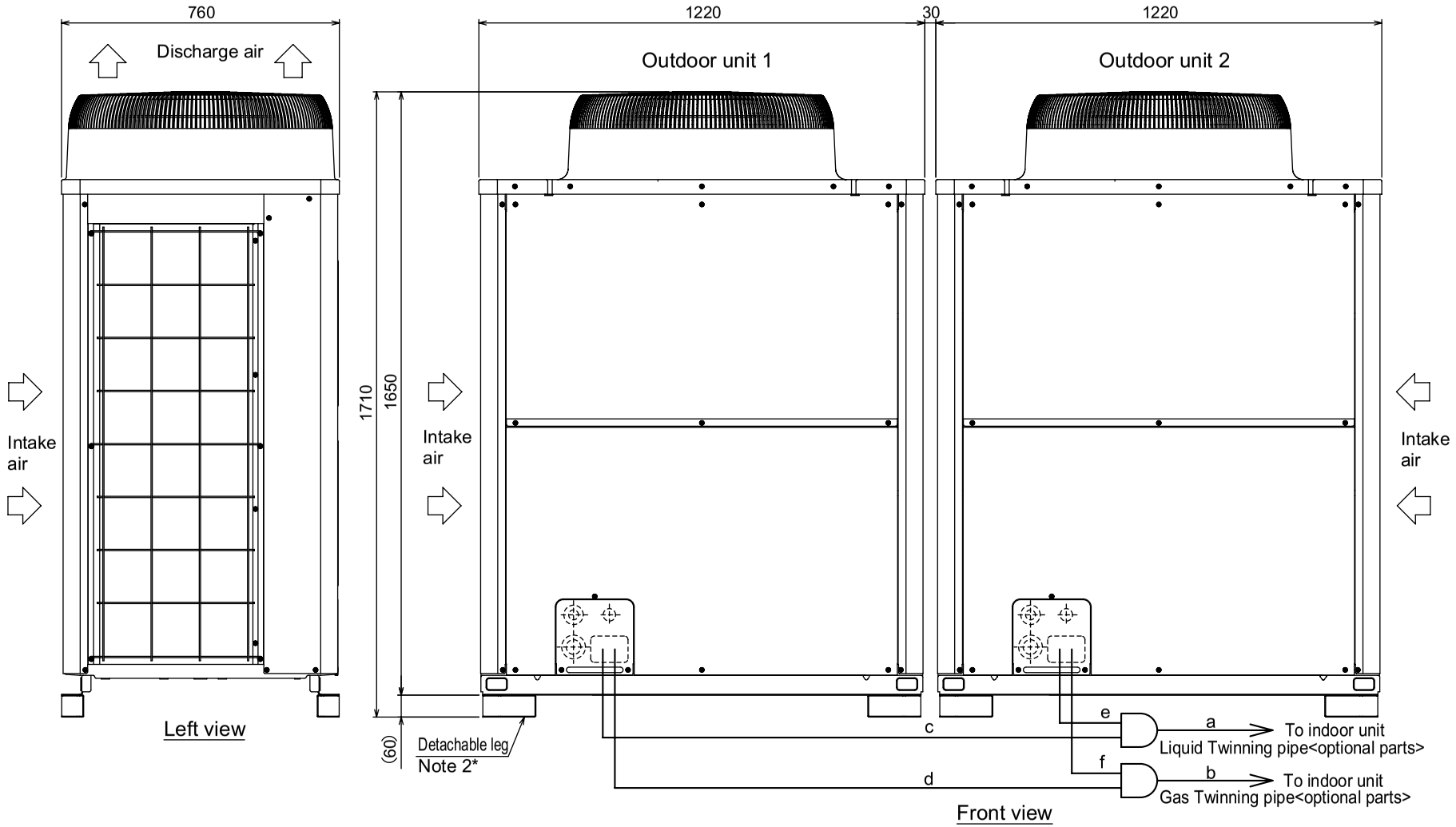

Twinning pipe connection size

Package unit name			PUHY-P750YSHM-A(-BS)
Component unit name	Outdoor unit 1		PUHY-P400YHM-A(-BS)
	Outdoor unit 2		PUHY-P350YHM-A(-BS)
Outdoor Twinning Kit(optional parts)			CMY-Y200VBK2
Indoor unit ~Twinning pipe	Liquid	a	ø19.05
	Gas	b	ø34.93

	Unit model	Liquid	Gas
		c or e	d or f
Twinning pipe ~ Outdoor unit	P350	ø12.7	ø28.58
	P400	ø15.88	ø28.58

Unit:mm

Note 1.Connect the pipes as shown in the figure above. Refer to the table above for the pipe size.
2.The detachable leg can be removed at site.
3.Twinning pipes should not be tilted more than 15 degrees from the ground.See the Installation Manual for details.

3. Center of gravity

• PUHY-P250YHM-A

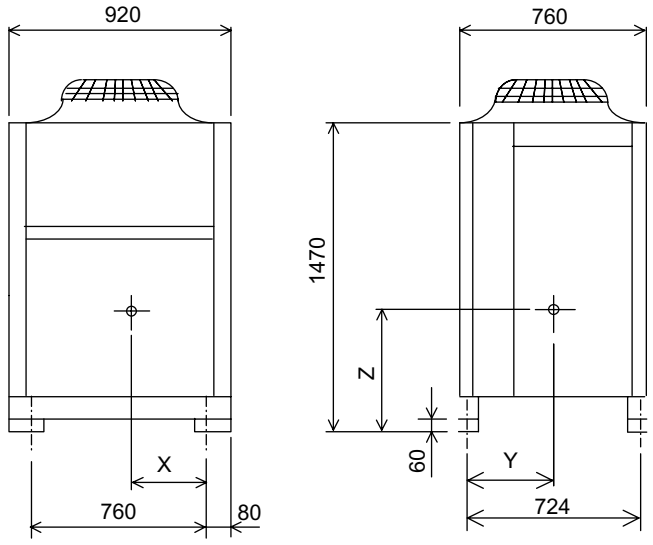

Model	X	Y	Z
PUHY-P250YHM-A (-BS)	334	329	652

Unit:mm

• PUHY-P350, P400YHM-A

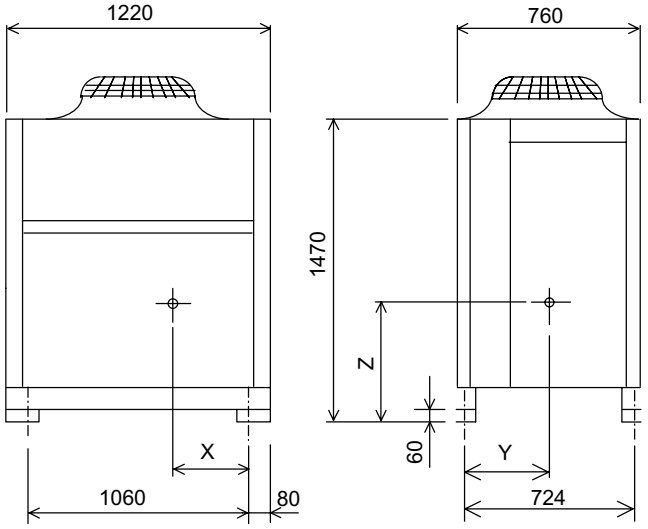

Model	X	Y	Z
PUHY-P350YHM-A (-BS)	440	329	630
PUHY-P400YHM-A (-BS)	440	329	630

Unit:mm

4. Electrical wiring diagram

•PUHY-P250, 350, 400YHM-A

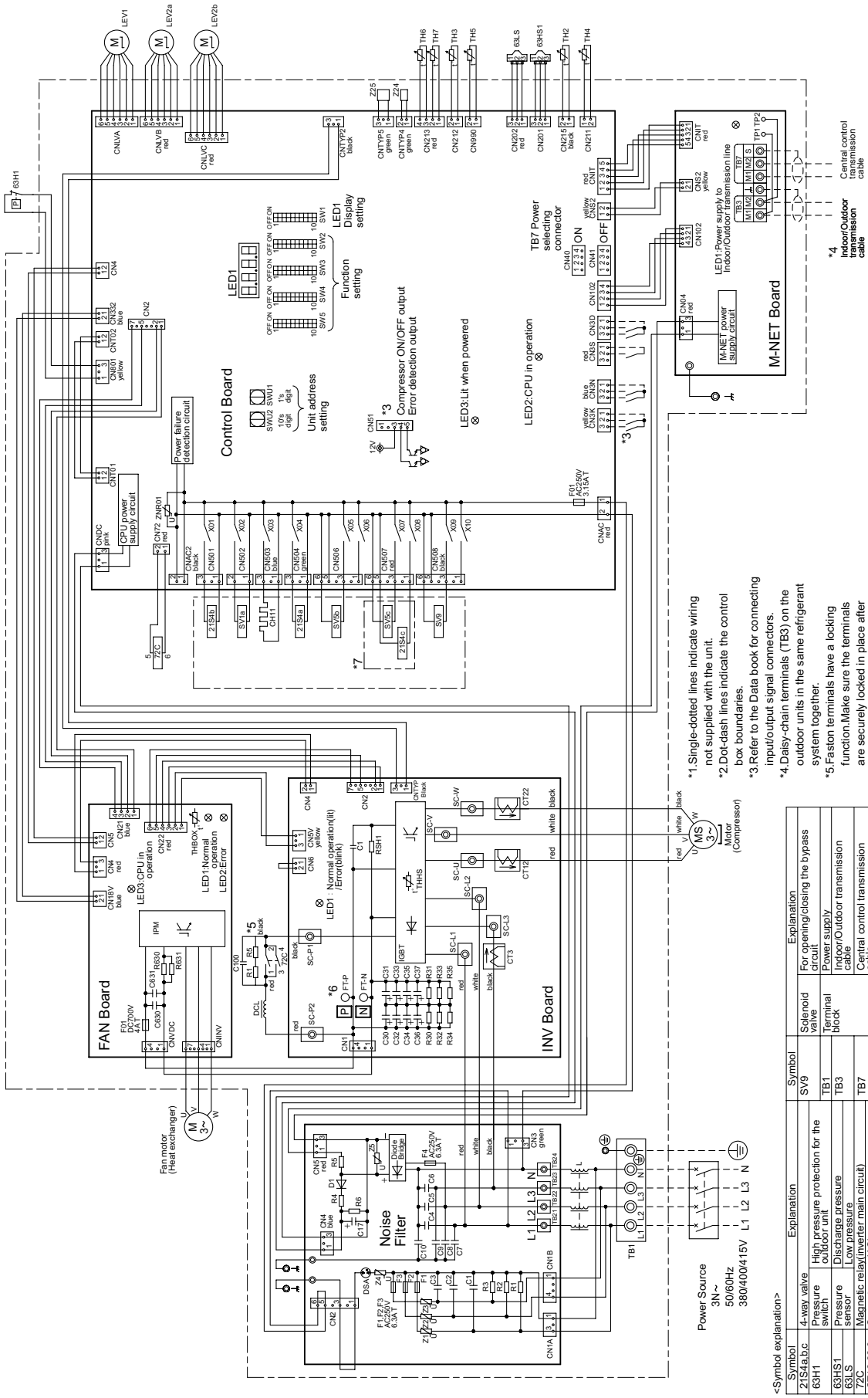

*1.Single-dotted lines indicate wiring not supplied with the unit.
*2.Dot-dash lines indicate the control box boundaries.
*3.Refer to the Data book for connecting input/output signal connectors.
*4.Daisy-chain terminals (TB3) on the outdoor units in the same refrigerant system together.
*5.Faston terminals have a locking function.Make sure the terminals are securely locked in place after insertion.Press the tab on the terminals to removed them.
*6.Control box houses high-voltage parts. Before inspecting the inside of the control box,turn off the power,keep the unit off for at least 10 minutes, and confirm that the voltage between FT-P and FT-N on INV Board has dropped to DC20V or less.

*7.Difference of appliance

Model name	Appliance
P250	*7 do not exist
P350/P400	*7 exist

<Symbol explanation>

Symbol	Explanation	Symbol	Explanation	Symbol	Explanation
21S4a,b,c	4-way valve	SV9	Solenoid valve		For opening/closing the bypass circuit
63H1	Pressure switch	TB1	Terminal block		Power supply
63HS1	Pressure sensor	TB3			Indoor/Outdoor transmission cable
63LS	Low pressure	TB7			Central control transmission cable
72C	Magnetic relay(Inverter main circuit)	TH2	Thermistor		Subcool bypass outlet temperature
CT12,22,3	Current sensor(AC)	TH3			Pipe temperature
CH11	Crankcase heater(for heating the compressor)	TH4			Discharge pipe temperature
DCL	DC reactor	TH5			ACC inlet pipe temperature
LEV1	Linear expansion valve	TH6			Subcooled liquid refrigerant temperature
LEV2a,b		TH7			OA temperature
SV1a	Solenoid valve	THBOX			Control box internal temperature
SV5b,c		THHS			IGBT temperature
	High pressure protection for the outdoor unit	Z24,25			Function setting connector
	Discharge pressure				
	Low pressure				
	HIC bypass,Controls refrigerant flow in HIC circuit				
	Pressure control,Refrigerant flow rate control				
	For opening/dosing the bypass circuit under the O/S				
	Outdoor unit heat exchanger capacity control				

5. Sound Pressure Levels

•PUHY-P250YHM-A(-BS)

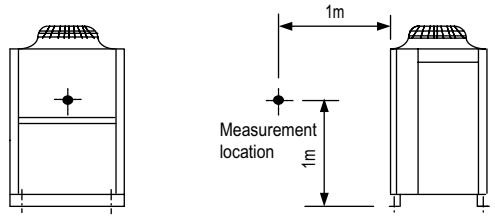

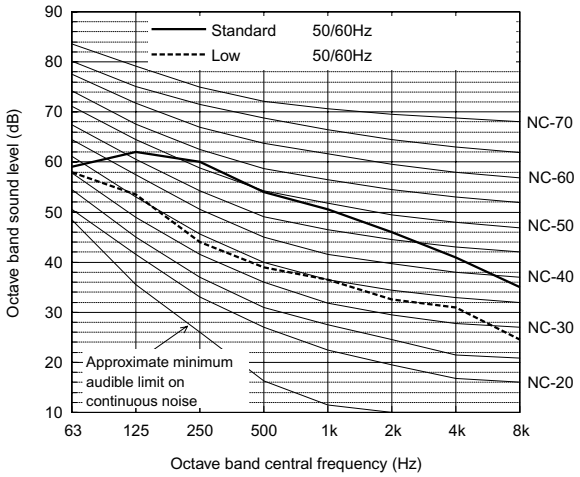

		63	125	250	500	1k	2k	4k	8k	dB(A)
Standard	50/60Hz	59.0	62.0	60.0	54.0	50.5	46.0	41.0	35.0	57.0
Low Noise Mode	50/60Hz	58.0	53.5	44.0	39.0	36.5	32.5	31.0	24.5	44.0

When Low Noise Mode is set,the A/C system's capacity is limited. The system could return to normal operation from Low Noise Mode automatically in the case that the operation condition is severe.

•PUHY-P500YSHM-A(-BS)

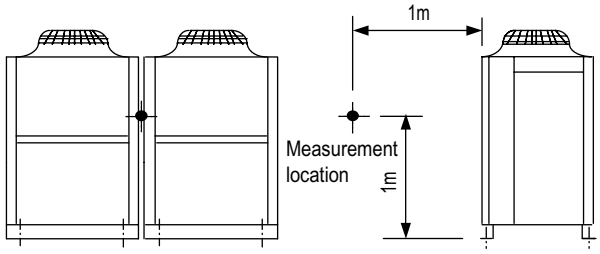

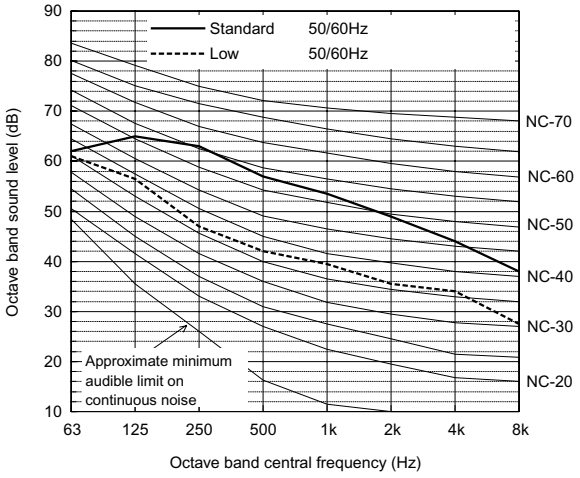

		63	125	250	500	1k	2k	4k	8k	dB(A)
Standard	50/60Hz	62.0	65.0	63.0	57.0	53.5	49.0	44.0	38.0	60.0
Low Noise Mode	50/60Hz	61.0	56.5	47.0	42.0	39.5	35.5	34.0	27.5	47.0

When Low Noise Mode is set,the A/C system's capacity is limited. The system could return to normal operation from Low Noise Mode automatically in the case that the operation condition is severe.

•PUHY-P750YSHM-A(-BS)

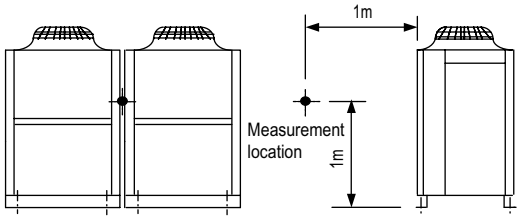

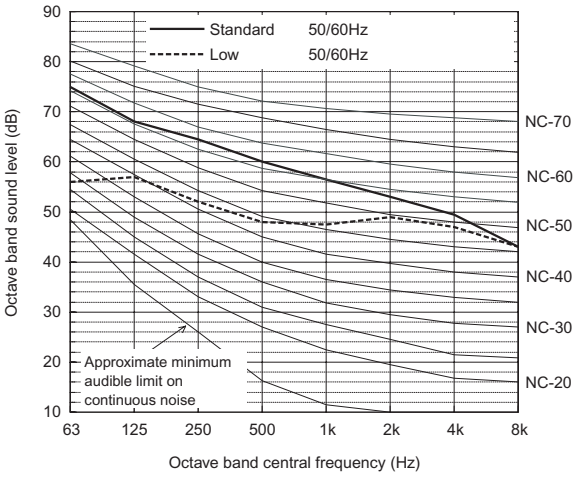

		63	125	250	500	1k	2k	4k	8k	dB(A)
Standard	50/60Hz	75.0	68.0	64.5	60.0	56.5	53.0	49.5	43.0	63.5
Low Noise Mode	50/60Hz	56.0	57.0	52.0	48.0	47.5	49.0	47.0	43.0	55.0

When Low Noise Mode is set,the A/C system's capacity is limited. The system could return to normal operation from Low Noise Mode automatically in the case that the operation condition is severe.

6. Optional parts

(1) Outdoor twinning kit

For PUHY-P-YSHM, following optional Outdoor Twinning Kit is needed to use to combine to refrigerant flows of its PUHY-P-YHM. Details of selecting the proper kit should be referred to the System Design Section.

CMY-Y100VBK2

mm

For Gas pipe:

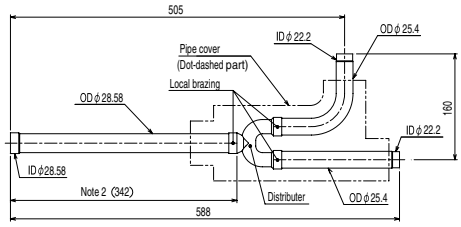

For Liquid pipe:

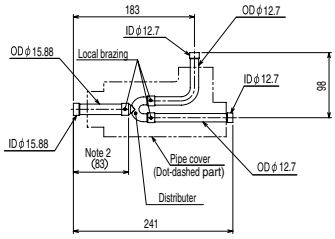

<Deformed pipe(Accessory)>

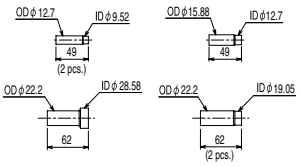

ID: Inner Diameter OD: Outer Diameter

CMY-Y200VBK2

mm

For Gas pipe:

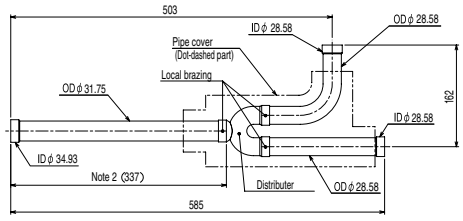

For Liquid pipe:

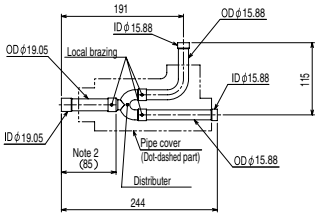

<Deformed pipe(Accessory)>

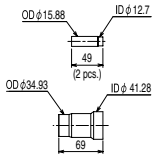

ID: Inner Diameter OD: Outer Diameter

Note 1. Reference the attitude angle of the branch pipe below the fig.

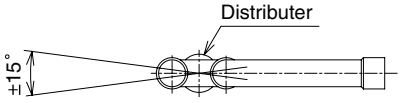

The angle of the branch pipe is within ±15° against the ground.

2. Use the attached pipe to braze the port-opening of the distributer.
3. Pipe diameter is indicated by inside diameter.

Ⅳ. Capacity Tables

(1) Correction by temperature

①Cooling

●P250

• Cooling capacity

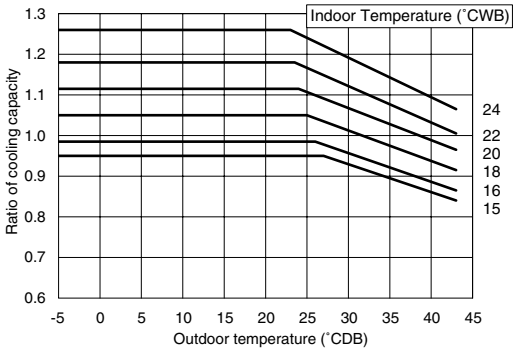

• Cooling input

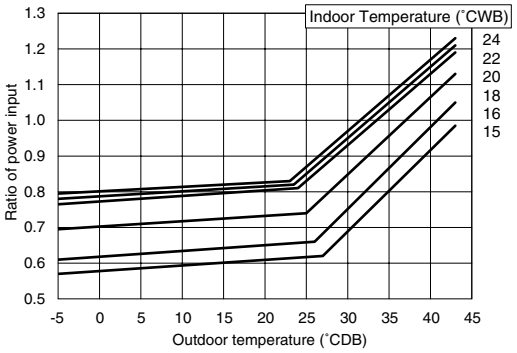

●P500

• Cooling capacity

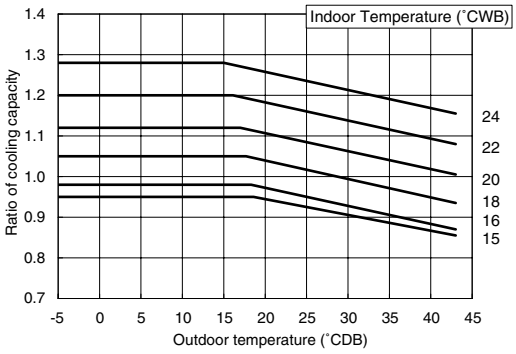

• Cooling input

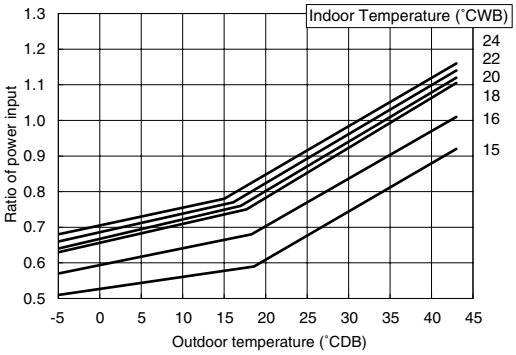

●P750

• Cooling capacity

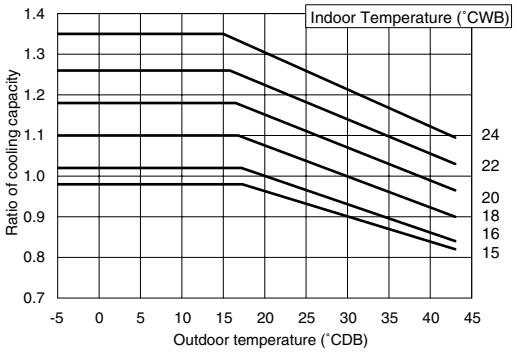

• Cooling input

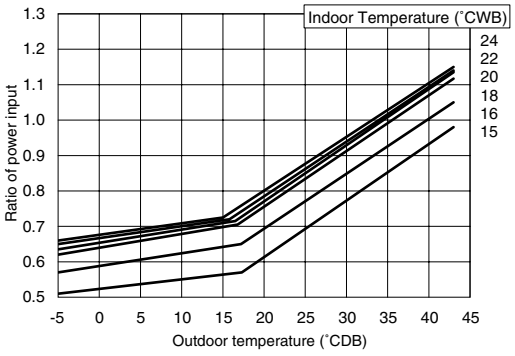

●Fresh air intake type

• Cooling capacity

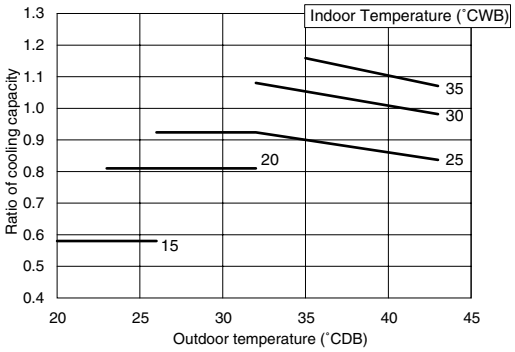

• Cooling input

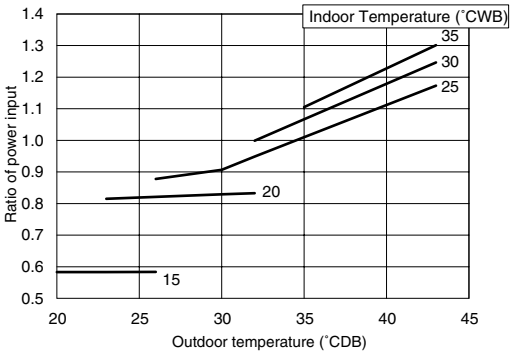

②Heating

●P250

• Heating capacity

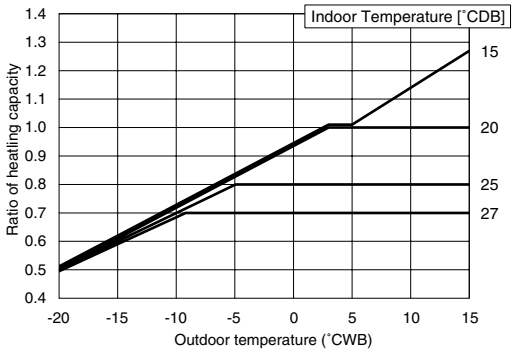

• Heating input

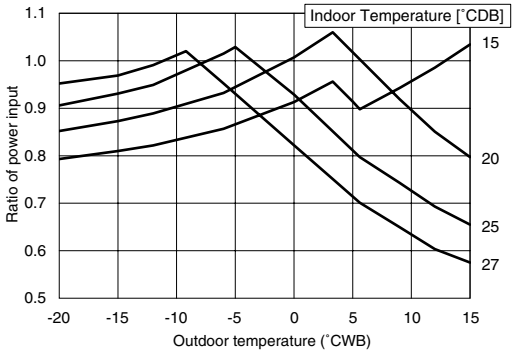

●P500

• Heating capacity

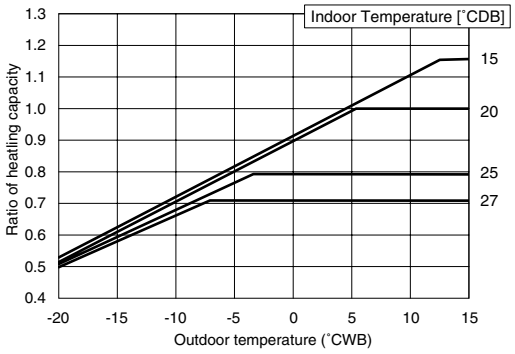

• Heating input

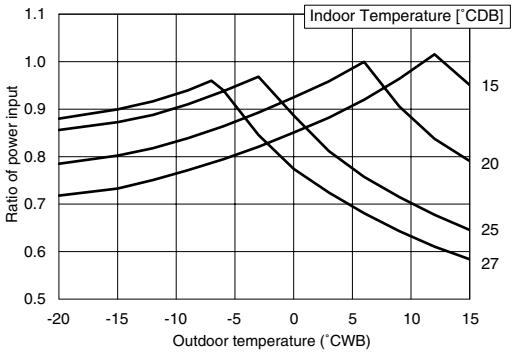

●P750

• Heating capacity

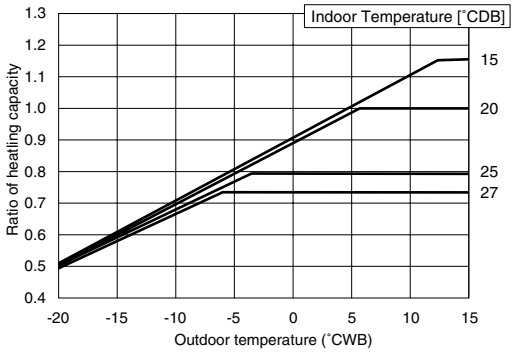

• Heating input

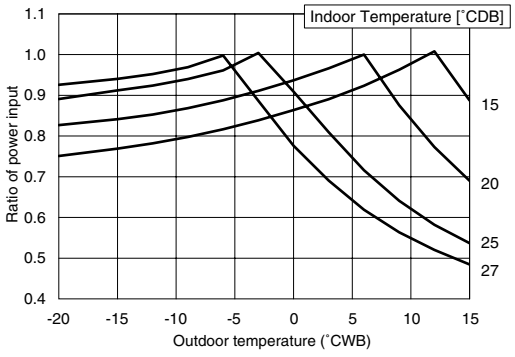

●Fresh air intake type

• Heating capacity

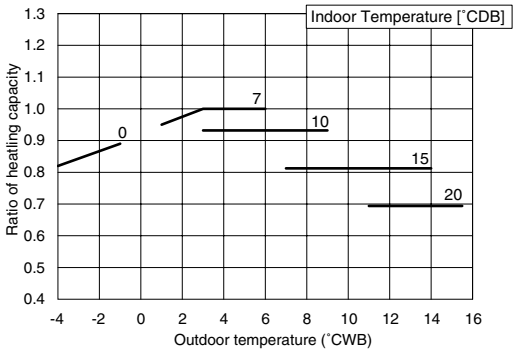

• Heating input

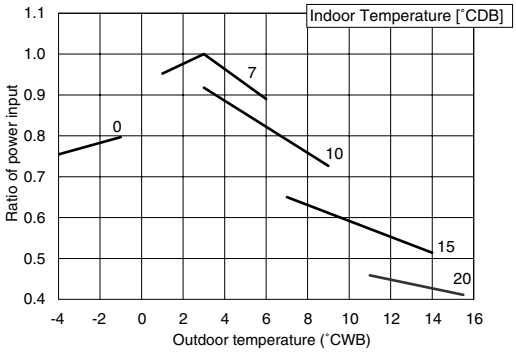

(2) Correction at frosting and defrosting

• Table of correction factor at frosting and defrosting

Outdoor temp. ˚CWB	6	4	2	1	0	-2	-4	-6	-8	-10	-20
PUHY-P250YHM-A	1.00	0.95	0.84	0.83	0.83	0.87	0.90	0.95	0.95	0.95	0.95
PUHY-P500YSHM-A	1.00	0.98	0.89	0.86	0.89	0.90	0.92	0.95	0.95	0.95	0.95
PUHY-P750YSHM-A	1.00	0.98	0.89	0.88	0.89	0.90	0.92	0.95	0.95	0.95	0.95

(3) Correction by refrigerant piping length

●P250,P300-E-F

• Cooling

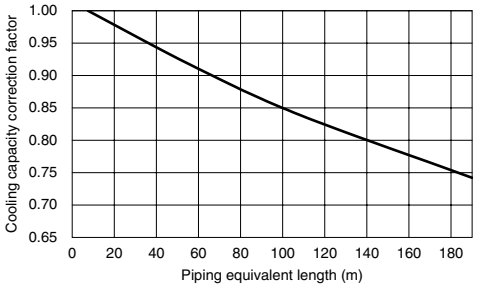

• Heating

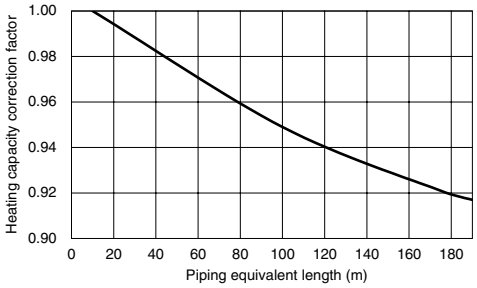

• How to obtain piping equivalent length

Equivalent length = (Actual piping length to the indoor unit)
+ (0.42×number of bent on the piping) m

●P500,P600-E-F

• Cooling

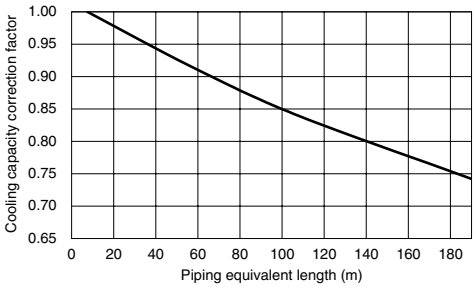

• Heating

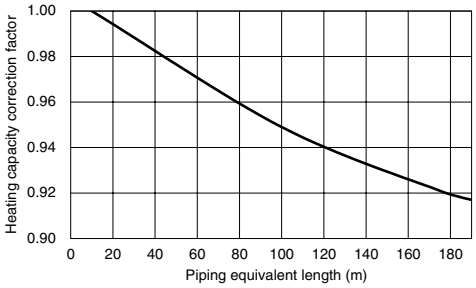

• How to obtain piping equivalent length

Equivalent length = (Actual piping length to the indoor unit)
+ (0.5×number of bent on the piping) m

●P750,P900-E-F

• Cooling

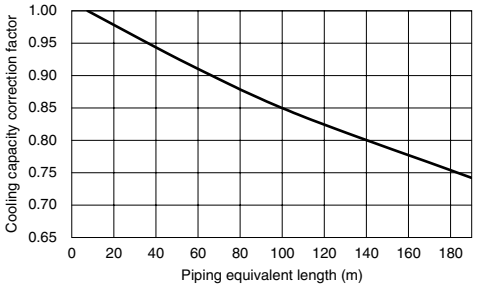

• Heating

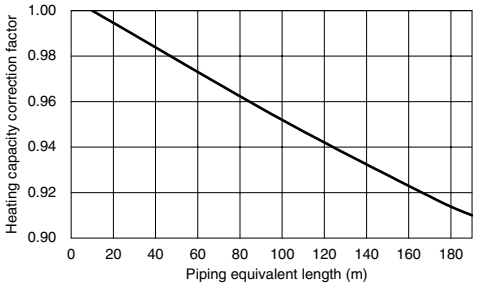

• How to obtain piping equivalent length

Equivalent length = (Actual piping length to the indoor unit)
+ (0.7×number of bent on the piping) m

(4) Correction by indoor unit airflow rate

●P250

• Cooling

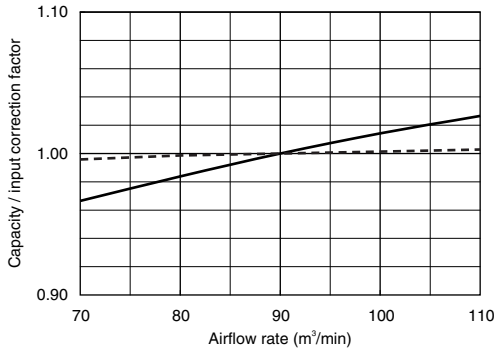

• Heating

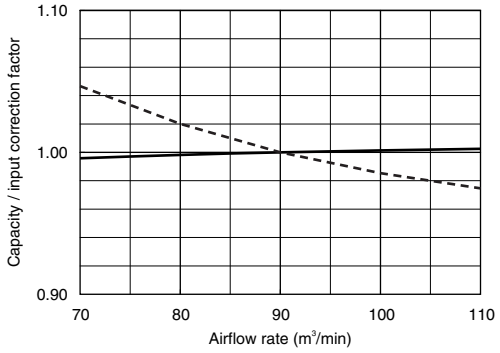

*1.Solid line indicates capacity correction factor
*2.Broken line indicates input correction factor

●P500

• Cooling

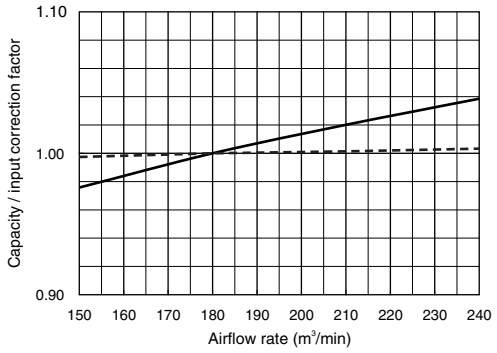

• Heating

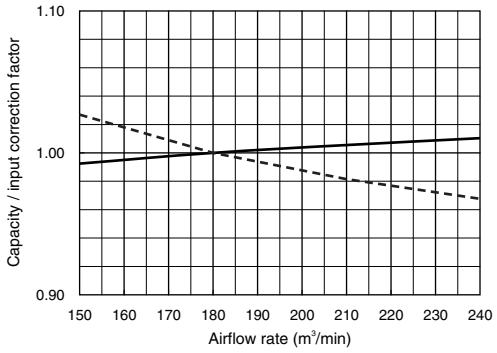

*1.Solid line indicates capacity correction factor
*2.Broken line indicates input correction factor

●P750

• Cooling

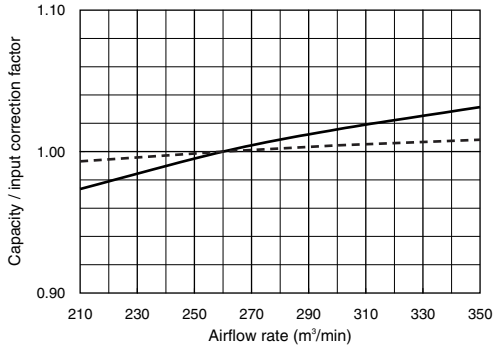

• Heating

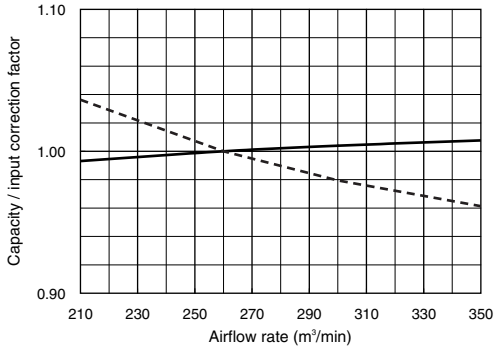

*1.Solid line indicates capacity correction factor
*2.Broken line indicates input correction factor

●Fresh air intake type

• Cooling

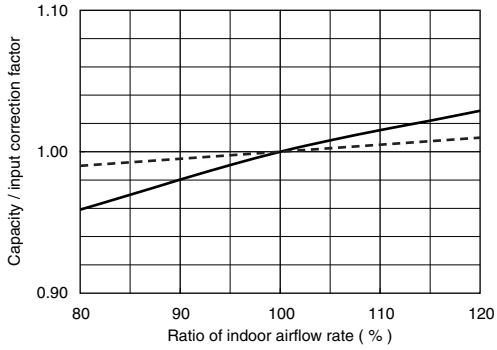

• Heating

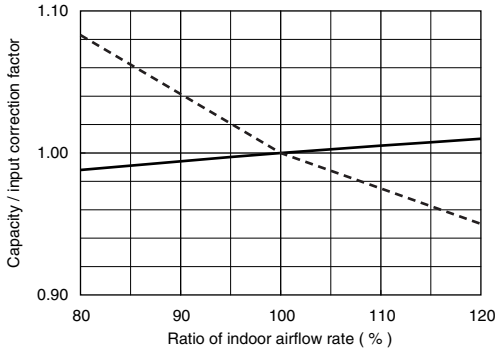

*1.Solid line indicates capacity correction factor
*2.Broken line indicates input correction factor

(5) Input correction by capacity

●P250

• Cooling

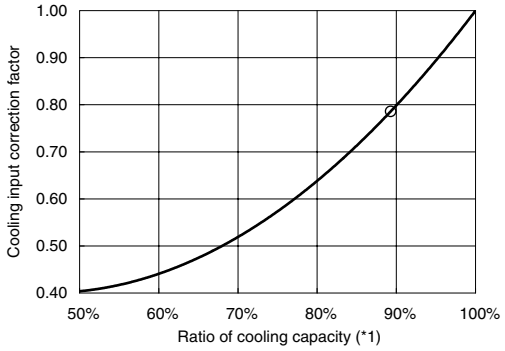

• Heating

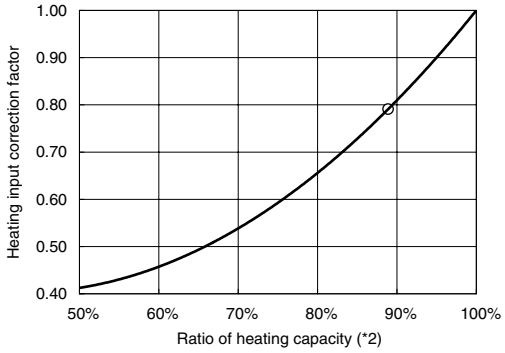

*1.Cooling capacity devided by maximum cooling capacity
*2.Heating capacity devided by maximum heating capacity
*3." ○" in figure indicates nominal input factor at nominal capacity.

●P300-E-F

• Cooling

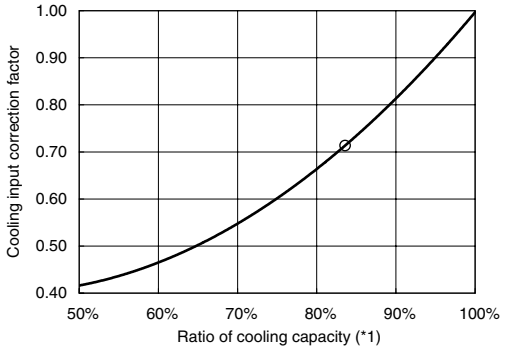

• Heating

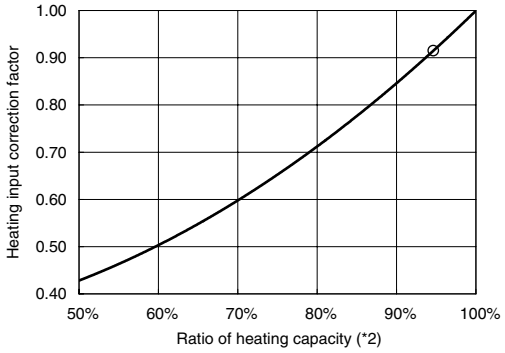

*1.Cooling capacity devided by maximum cooling capacity
*2.Heating capacity devided by maximum heating capacity
*3." ○" in figure indicates nominal input factor at nominal capacity.

●P500,P600-E-F

• Cooling

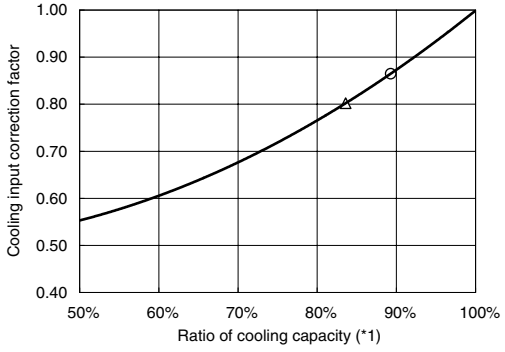

• Heating

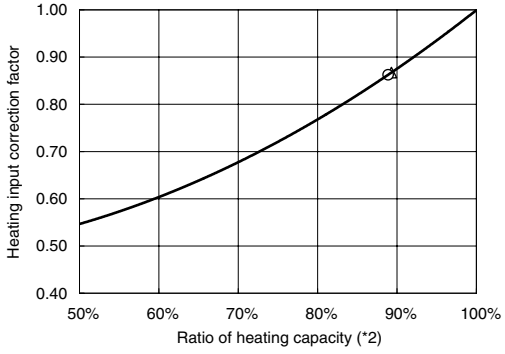

*1.Cooling capacity devided by maximum cooling capacity
*2.Heating capacity devided by maximum heating capacity
*3." ○" in figure indicates P500 type nominal input factor at nominal capacity.
*4." △" in figure indicates P600-F type nominal input factor at nominal capacity.

●P750,P900-E-F

• Cooling

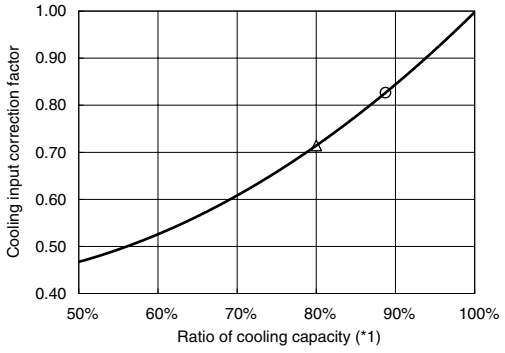

• Heating

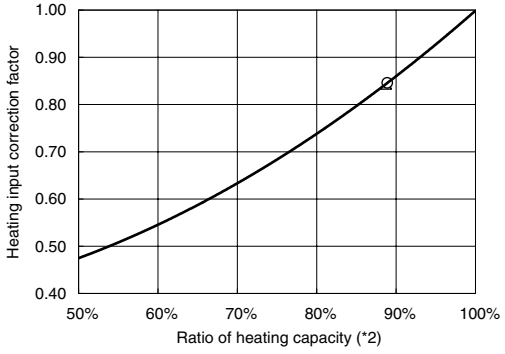

*1.Cooling capacity devided by maximum cooling capacity
*2.Heating capacity devided by maximum heating capacity
*3." ○" in figure indicates P750 type nominal input factor at nominal capacity.
*4." △" in figure indicates P900-F type nominal input factor at nominal capacity.

(6) Bypass factor

●P250

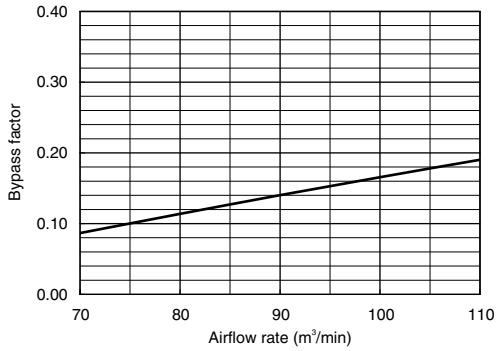

●P750

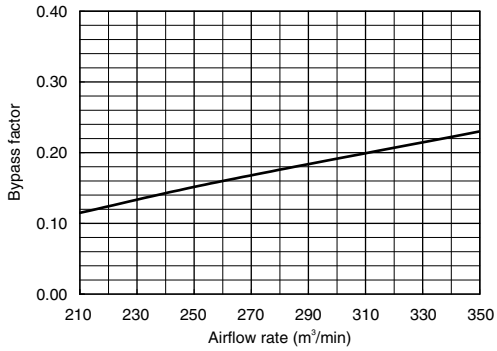

●P500

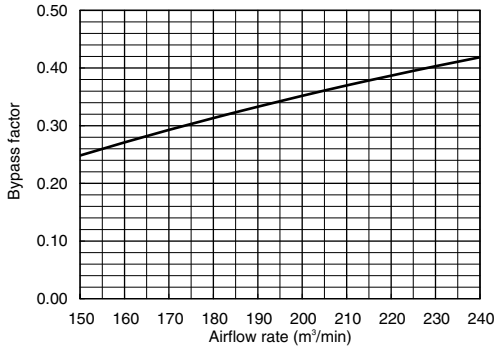

●P300-E-F

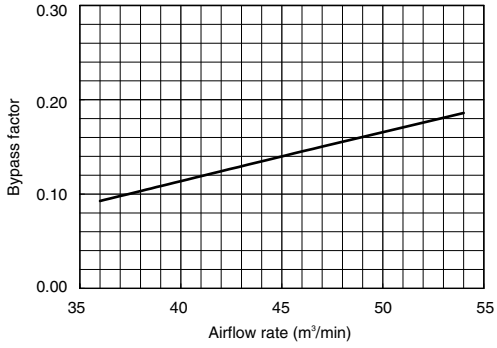

●P600-E-F

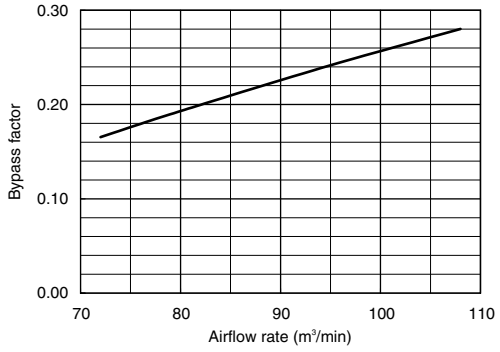

●P900-E-F

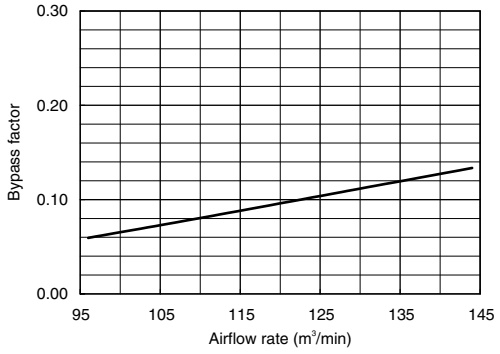

V. Controller

1. Local remote controller

(1) MA Remote controller

PAR-21MAA : built-in the indoor unit.

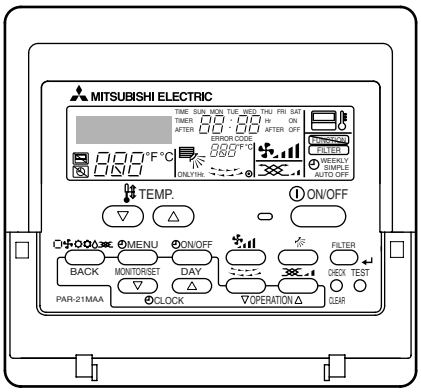

- Dot matrix liquid crystal screen displays complete operating status.
- Digital display lets you set temperature in 1°C/°F increments.
- Weekly Timer: up to 8 ON/OFF/Temperature Settings can be made per day. The time can be set in 1-minute increments. The setting is kept in nonvolatile memory.
  No need to worry about resetting at power failure.
- Equipped with a thermostat sensor in the remote controller that makes possible more comfortable room temperature control.
- Ability to limit the set temperature (upper and lower temperature can be set.)
- Ability to restrict setting changes (either all changes or all except ON/OFF)
- Constantly monitors for malfunctions in the system, and is equipped with a "self-diagnosis function" that lets you know by error code immediately when a malfunction occurs.
- Dimensions: 130(W) x120(H) x 19(D) mm

■ Functions

□:Each unit ○:Each group ●:Each block
△:Each floor ◎:Collective ×:Not available

Item	Description	Operations	Display
ON/OFF	Run and stop operation for a single group	○	○
Operation mode switching	Switches between Cool / Fan / Heat. Operation modes vary depending on the air conditioner unit.	○	○
TEMP. Temperature setting	Sets the temperature for a single group Range of temperature setting Cool : 19°C- 30°C (14°C - 30°C) [66°F- 86°F]([57°F - 86°F]) Heat : 17°C- 28°C (17°C - 28°C) [68°F- 82°F]([68°F - 82°F]) ( ) in case of using middle-temperature on PDFY, PEFY-VML/VMR/VMS/VMH-E by setting DipSW7-1 to ON. Yet, PEFY-P-VMH-E-F is excluded.	○	○
Weekly scheduler	ON/OFF/Temperature setting can be done up to 8 times one day in the week. The time can be set by the minute.	○	○
Permit / Prohibit local operation	Individually prohibit operation of each local remote control function (Start/Stop, Change operation mode, Set temperature, Reset filter). ※1: When the local remote controller inactivation command is received from the master system controller, "" is displayed.	×	※1 ○
Prohibition/permission of specified mode (Cooling prohibited /heating prohibited /cooling-heating prohibited)	By the setting from System Controller, the operation for the following modes is prohibited. At cooling prohibited : Cool At heating prohibited : Heat At cooling-heating prohibited : Cool, Heat	×	○
Indoor unit intake temperature	Measures the intake temperature of the indoor unit when the indoor unit is operating.	×	○
Error	When an error is currently occurring on an air conditioner unit, the afflicted unit and the error code are displayed.	×	□
Test run	This operates air conditioner units in test run mode.	○	○
Function to limit the setting range of room temperature (Set temperature range limit)	Set temperature range limit to cooling, heating, or auto mode.	○	○
Easy-to-operate simplified locking function (Auto lock function)	Setting/releasing of simplified locking for remote control switch can be performed. · Locking of all switches · Locking of all switches except Start/Stop switch	○	○

■ External dimension

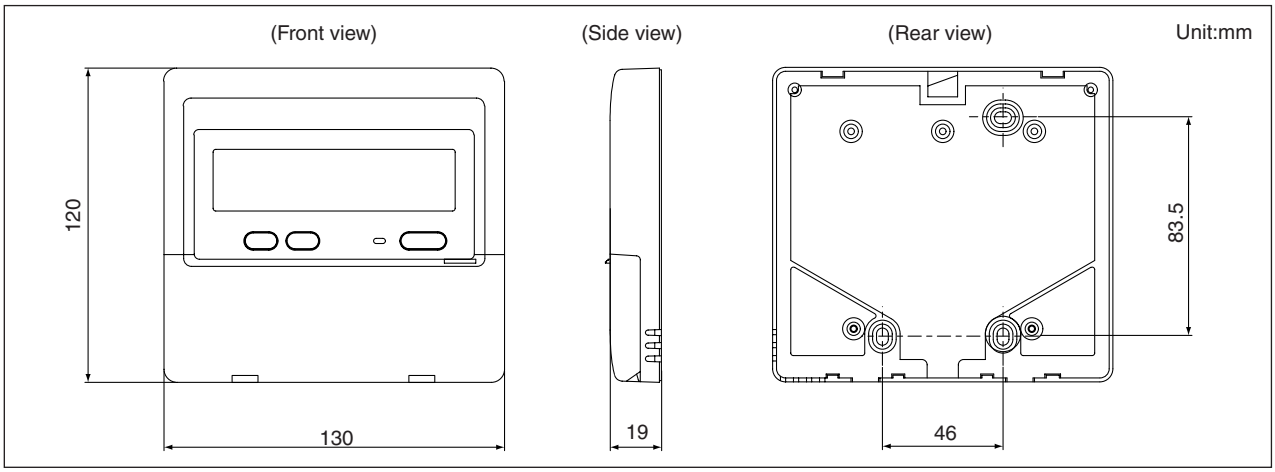

Ⅵ. System Design

1. Outdoor Installation

(1) Requirement on installation site

1. No direct thermal radiation to the unit;
2. No possibility of annoying the neighbors by the sound of the unit;
3. Avoid the sites where strong winds blow.
4. With strength to bear the weight of the unit;
5. Drain flow from the unit is cared at heating mode;
6. Enough space for installation and service as shown at (2);
7. Avoid the sites where acidic solutions or chemical sprays (sulfur series)are used frequently.
8. The unit should be secure from combustible gas,oil,steam,chemical gas like acidic solution,sulfur gas and so on.

1.Required space around the unit

● In case of single installation

① Secure enough space around the unit as shown in the figure below.

ïWith a space of at least 300mm to the wall on the back of the unit

ïWith a space of at least 100mm to the wall on the back of the unit

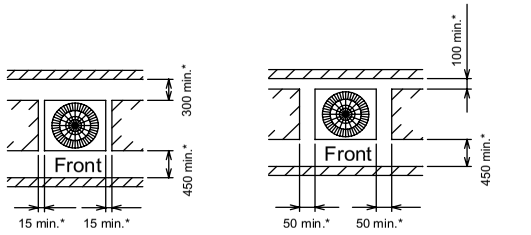

<Unit:mm>

② When the height of the walls on the front,back or on the sides<H> exceeds the wall height limit as defined below
add the height that exceeds the height limit <h> to the figures that are marked with an asterisk.

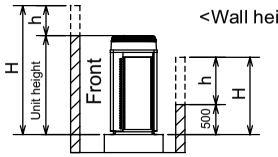

<Wall height limit> Front :Up to the unit height
Back :Up to 500mm from the unit bottom
Side :Up to the unit height

● In case of collective installation

① When multiple units are installed adjacent to each other, secure enough space to allow for air circulation and walkway between groups of units as shown in the figures below.
② At least two sides must be left open.
③ As with the single installation, add the height that exceeds the height limit<h> to the figures that are marked with an asterisk.

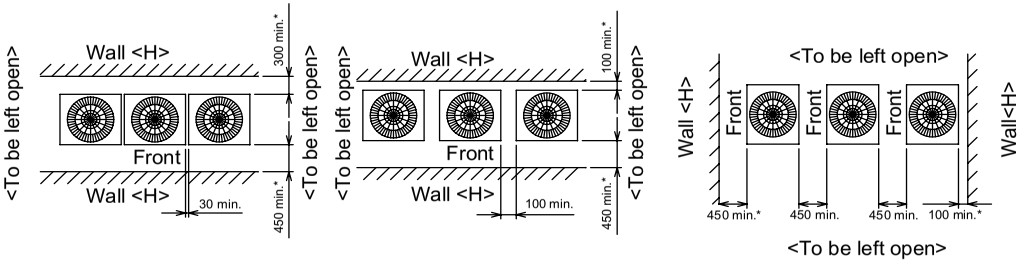

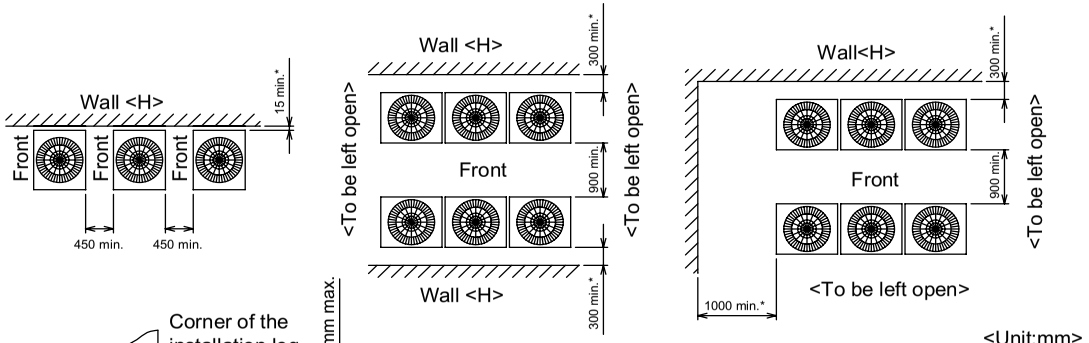

<Unit:mm>

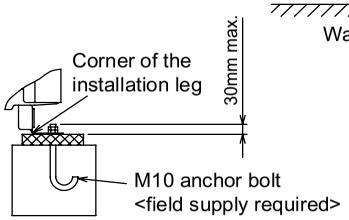

Fig.A (without detachable legs)

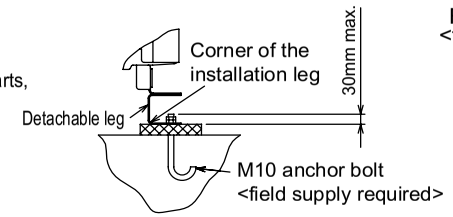

Fig.B (with detachable legs)

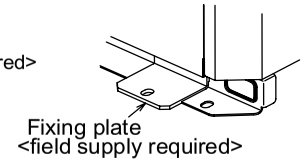

Fig.C (without detachable legs)

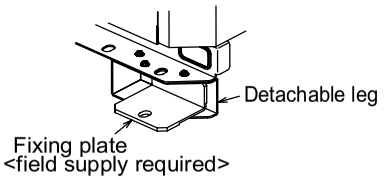

Fig.D (with detachable legs)

2.Foundation work

① Take into consideration the surface strength,water drainage route, piping route,and wiring route when preparing the installation site.
<Note that the drain water comes out of the unit during operation.>
② Build the foundation in such way that the corner of the installation leg is securely supported as shown in the right figure.(Fig.A,B)
When using a rubber isolating cushion, please ensure it is large enough to cover the entire width of each of the unit's legs.
③ The protrusion length of the anchor bolt must not exceed 30mm.(Fig.A,B)
④ Use four fixing plates as shown in the right figure <field supply required> when using post-installed anchor bolts.(Fig.C,D)
⑤ To prevent small animals and water from entering the unit and damaging its parts, close the gap around the edges of through holes for pipes and wires with filler plates <field supply required>.
⑥ When the pipes or cables are routed at the bottom of the unit, make sure that the through hole at the base of the unit does not get blocked with the installation base.
⑦ Refer to the Installation Manual when installing units on an installation base.

(3) Piping direction

a) Lifting method

· When lifting the unit with ropes, run the ropes under the unit and use the lifting hole.
· Support the unit at four points with two ropes, and avoid giving mechanical shock.
· Suspension rope angle must be 40˚ or less, so as to avoid compressing fan guard.
· Use two ropes, each at least 8m [26 ft.] in length
· Use ropes strong enough to support the weight of the unit.
· Always suspend the unit from four corners. (It is dangerous to suspend a unit from two corners and must not be attempted.)
· Use protective pads to keep the ropes from scratching the panels on the unit.

(Unit : m [ft.])

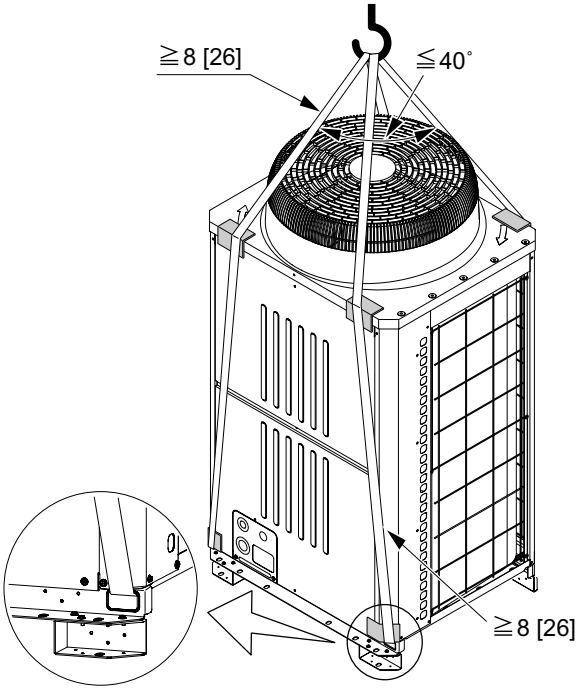

⚠ CAUTION

Exercise caution when transporting products.

· Products weighing more than 20 kg [45 LBS] should not be carried alone.
· Do not carry the product by the PP bands.
· To avoid the risk of injury, do not touch the heat exchanger fins.
· Plastic bags may pose a risk of choking hazard to children. Tear plastic bags into pieces before disposing of them.
· When lifting and transporting outdoor units with ropes, run the ropes through lifting hole at the unit base. Securely fix the unit so that the ropes will not slide off, and always lift the unit at four points to prevent the unit from falling.

b) IInstallation <Outdoor Unit>

When the pipes and/or cables are routed at the bottom of the unit, make sure that the through hole at the base of the unit does not get blocked with the installation base.
When the pipes are routed at the bottom of the unit, the base should be at least 100 mm [3-15/16 in.] in height.

· P250 (Unit : mm [in.])

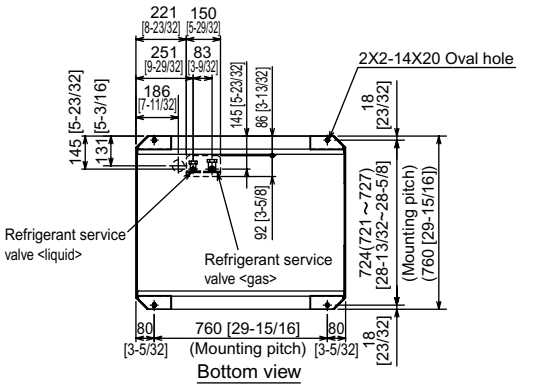

· P350, P400 (Unit : mm [in.])

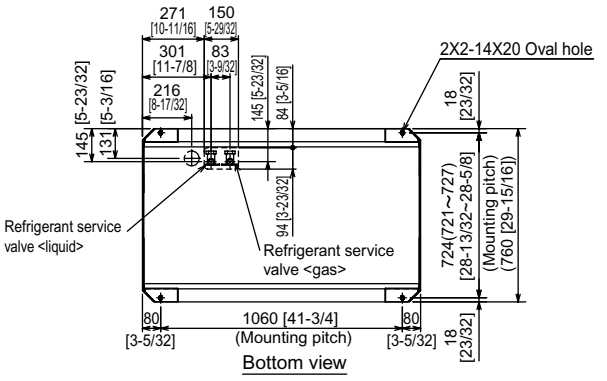

Installation base parallel to the unit's front panel

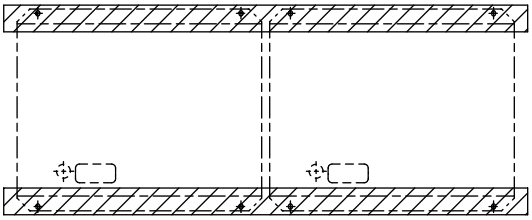

Installation base perpendicular to the unit's front panel

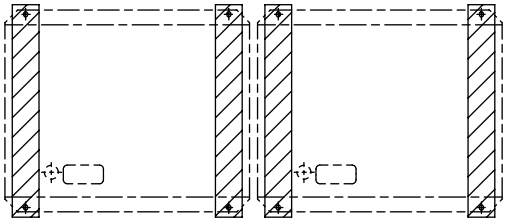

c) Refrigerant pipe routing

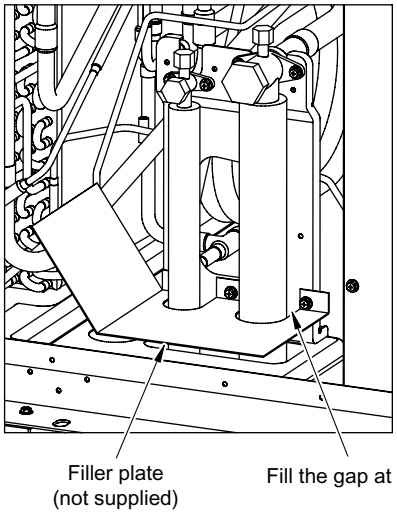

The gaps around the edges of through holes for pipes and wires on the unit allow water or mice to enter the unit and damage its parts. Close these gaps with filler plates.

This unit allows two types of pipe routing:
· Bottom piping
· Front piping

⚠ CAUTION

To prevent small animals, water, and snow from entering the unit and damage its parts, close the gap around the edges of through holes for pipes and wires with filler plates.

d) Installation

· Secure the unit with anchor bolts as shown in the figure below so that the unit will not topple over with strong wind or during an earthquake.
· Install the unit on a durable base made of such materials as concrete or angle steel.
· Take appropriate anti-vibration measures (e.g., vibration damper pad, vibration isolation base) to keep vibrations and noise from being transmitted from the unit through walls and floors.
· When using a rubber cushion, install it so that the cushion covers the entire width of the unit leg.
· Install the unit in such a way that the corner of the angle bracket at the base of the unit shown in the figure below is securely supported.
· Install the anchor bolt in such a way that the top end of the anchor bolt do not stick out more than 30 mm [1-3/16 in.].
· This unit is not designed to be anchored with post-installation-type anchor bolts, although by adding fixing brackets anchoring with such type of anchor bolts becomes possible.

⚠ WARNING

Properly install the unit on a surface that can withstand the weight of the unit. Unit installed on an unstable surface may fall and cause injury.

⚠ WARNING

Take appropriate safety measures against strong winds and earthquakes to prevent the unit from falling.

Ⓐ: M10 anchor bolt procured at the site.
Ⓑ: Corner is not seated.
Ⓒ: Fixing bracket for hole-in anchor bolt (3 locations to fix with screws).
Ⓓ: Detachable leg

<Without detachable leg>

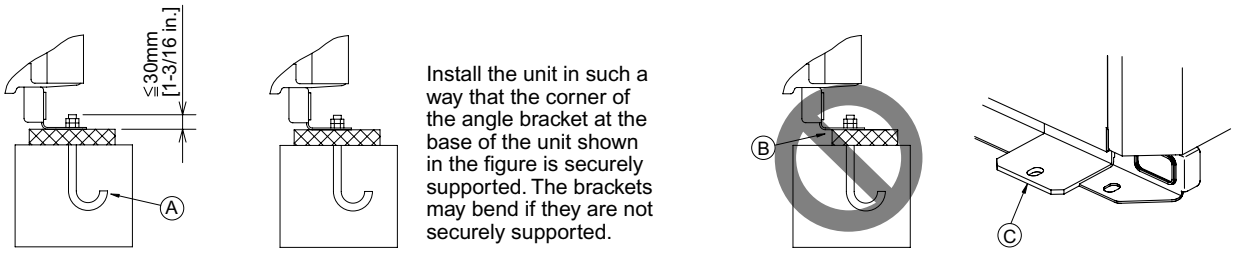

Install the unit in such a way that the corner of the angle bracket at the base of the unit shown in the figure is securely supported. The brackets may bend if they are not securely supported.

<With detachable leg>

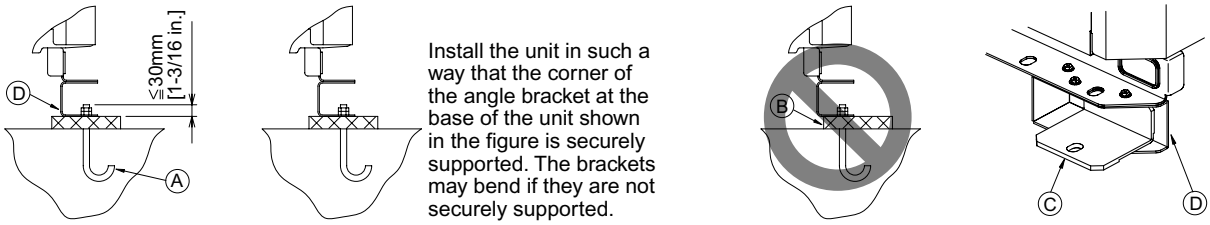

Install the unit in such a way that the corner of the angle bracket at the base of the unit shown in the figure is securely supported. The brackets may bend if they are not securely supported.

Take into consideration the durability of the base, water drainage route (Drain water is discharged from outdoor units during operation.), piping route, and wiring route when performing foundation work.

e) Anchor bolt positions

· Individual installation

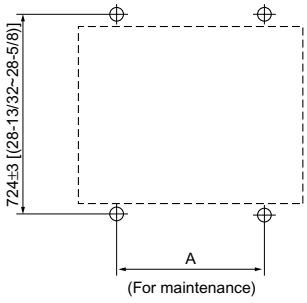

(For maintenance)

· Collective installation

(Unit : mm [in.])

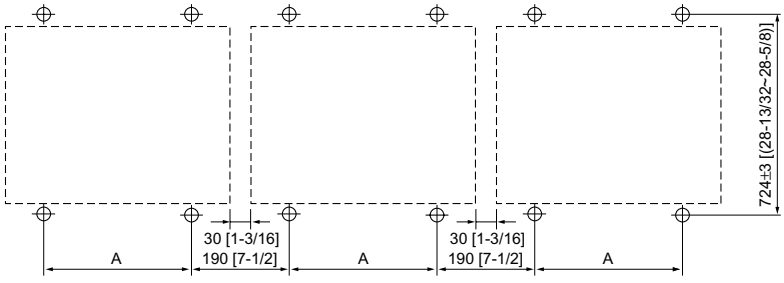

Leave a minimum of 30 mm [1-3/16 in.] between units.

PUHY	P250	P350, P400
A	760±2 [29-15/16(29-27/32~30)]	1060±2 [41-3/4(41-21/32~41-13/16)]

f) Twinning on the outdoor unit side

- The tilt angle of the twinning pipe
  The tilt angle of the twinning pipe must be within ±15 ° with the ground.
  Tilting the twinning pipe more than specified will cause damage to the unit.

- The length of the straight part of the pipe before the branching
  For the twinning kit, always use the accessory piping parts.
  The length of the straight part of pipe connected in front of the twinning pipe must be 500 mm (19 inch) or longer.
  (Connect the field piping so that the length of the straight part of pipe connected in front of the twinning pipe can be 500 mm (19 inch) or longer.)
  If the length is less than 500 mm (19 inch), it will cause damage to the unit.

Note: See the following drawing for the fitting position of the twinning pipe.

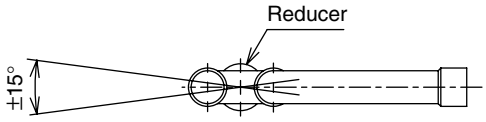

The tilt angle of the reducer should be within ±15° with the ground.

- The piping connection
  When connecting the twinning kit to the outdoor unit, note the following:
  If the length of piping from the twinning kit to the outdoor unit is more than 2 m (6 ft), install a trap within 2 m (6 ft) from the outdoor unit. The height of the trap must be 200 mm (7 inch) or higher.

<2 m (6 ft) or less>

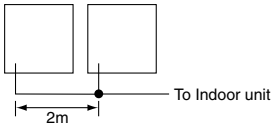

<More than 2 m (6 ft)>

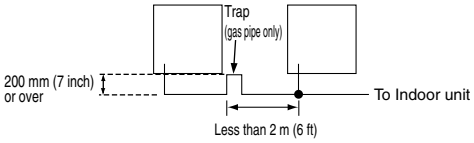

When installing the twinning kit in a higher position than the outdoor unit base, make sure that the twinning kit is installed in a position lower than 200 mm (7 inch) from the outdoor unit base.

<PUHY-P500YSHM-A>

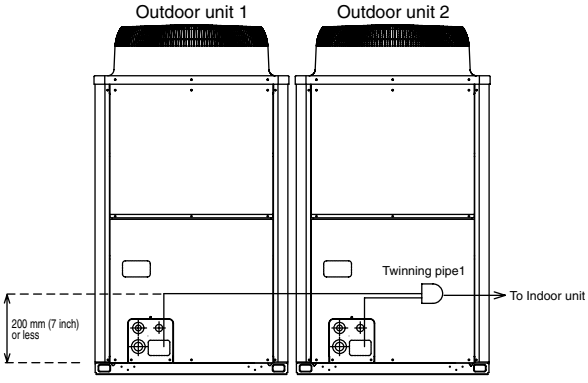

g) Twinning on the outdoor unit side

See the following drawing for connecting the pipes between the outdoor units.

<PUHY-P500YSHM-A>

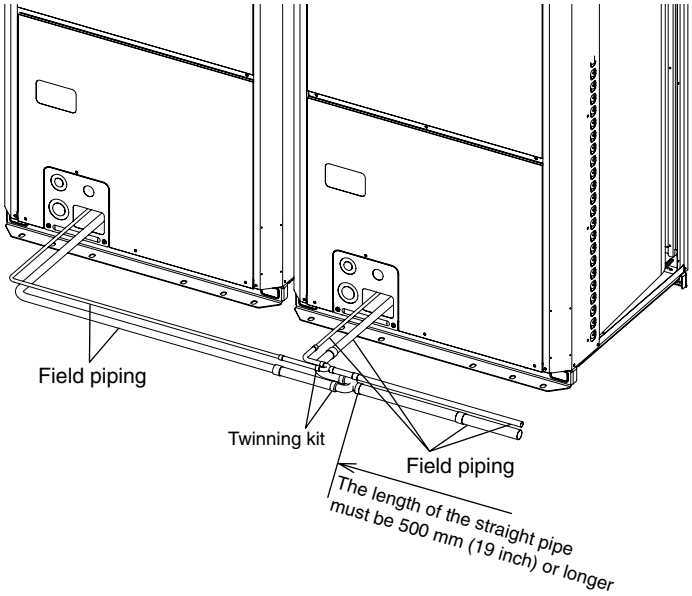

⚠ CAUTION

The length of the straight pipe must be 500mm or longer.
If not, it may cause improper operation.

(4) Weather countermeasure

In cold and/or snowy areas, sufficient countermeasures to wind and snow damages should be taken for operating unit in normal and good condition in winter time. Even in the other areas, full consideration is required for installation of unit in order to prevent abnormal operations caused by wind or snow. **When rain and snow directly fall on unit in the case of air-conditioning operations in 10 or less degrees centigrade outdoor air, mount inlet and outlet ducts on unit for assuring stable operations.**

Countermeasure to snow and wind

Prevention the Outdoor unit from wind and snow damages in cold or snowy areas, snow hood shown below is recommended and helpful.

• Snow hood

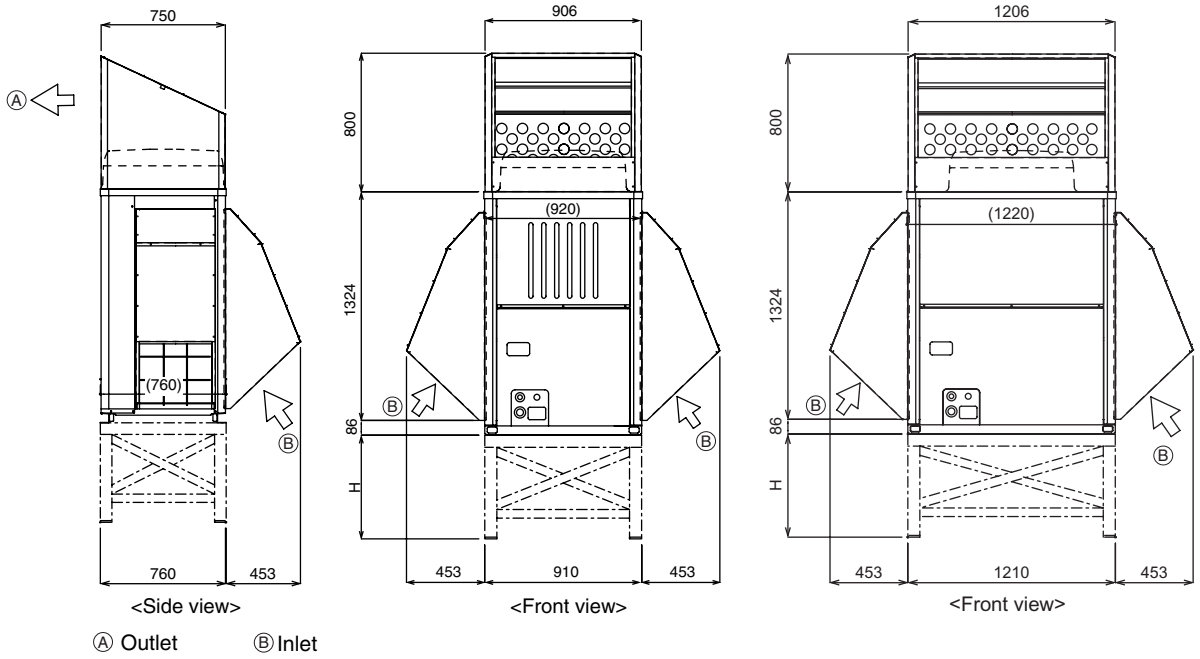

Note:

1. Height of frame base for snow damage prevention (H) shall be twice as high as expected snowfall. Width of frame base shall not exceed that of the unit. The frame base shall be made of angle steel, etc., and designed so that snow and wind slip through the structure. (If frame base is too wide, snow will be accumulated on it.)
2. Install unit so that wind will not directly lash against openings of inlet and outlet ducts.
3. Build frame base at customer referring to this figure.
   Material :Galvanized steel plate 1.2T
   Painting :Overall painting with polyester powder
   Color :Munsell 5Y8/1 (same as that of unit)
4. To install units side by side,install a filler plate between the fan guard and the outlet-side snow food as shown in Figure A.
   (The filler plate provided accommodates the installation pitch of between 30-80 mm.)
5. When the unit is used in a cold region and the heating operation is continuously performed for a long time when the outside air temperature is below freezing, install a heater to the unit base or take other appropriate measures to prevent water from freezing on the base.

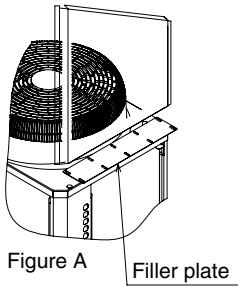

Figure A

Countermeasure to wind
Referring to the figure shown below, take appropriate measures which will suit the actual situation of the place for installation.
A unit installed alone is vulnerable to strong winds. Select the installation site carefully to minimize the effect of winds.
To install a unit in a place where the wind always blows from the same direction, install the unit so that the outlet faces away from the direction of the wind.

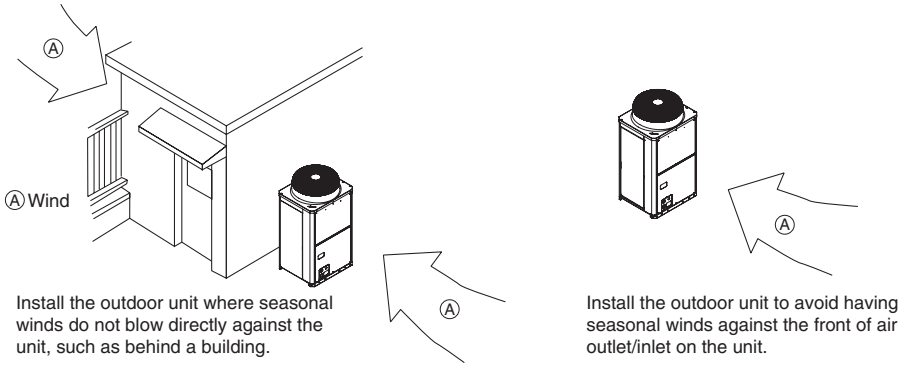

Install the outdoor unit where seasonal winds do not blow directly against the unit, such as behind a building.

Install the outdoor unit to avoid having seasonal winds against the front of air outlet/inlet on the unit.

2. Indoor Installation

(1) Requirement on installation site

1. In the way that the supply air is evenly distributed throughout the room,
2. In a place where the intruding air does not affect the unit's performance,
3. In a place where the flow of supply or return air is not obstructed,
4. In a place where airborne flammable oil droplets or steam are not present,
5. In a place where the risk of flammable gas leakage, migration, and/or accumulation is absent,
6. In a place where no high-frequency emitting devices are used,
7. In the way that the sensor of a fire alarm is not located on the supply air outlet side.
   (Heated supply air may trigger a false alarm during heating operation.)
8. Do not install the unit in a place where acid solutions are frequently used.
9. Do not install the unit in a place where special chemical sprays (e.g., sulfuric gas) are used.
10. Do not install the unit in a place where corrosive gas or organic solvents are present.
11. In an environment high in oil mist, formic acid that is generated from a mixture of oil and drain water can corrode the copper pipe and seriously shorten its life.
12. Corrosive gasses (e.g., sulfuric gas) that are generated in a place where food items are processed and/or stored can damage the indoor unit and seriously shorten its life.

<Caution>

- If the units are operated for a long time at the dew point temperature of 23˚C[73˚F] or more, condensate may collect and drip from the indoor units. If the units are operated under such conditions, cover the entire surface of all indoor units with insulating materials with a thickness of between 10 mm[7/16 in.] and 20 mm[13/16 in.] to prevent condensate from collecting.
- Indoor units that are installed in a machine room and connected to an adjacent room with a duct may collect condensate if the temperature and humidity in the machine room rise high enough. If this situation happens, circulate the air in the machine room and in the adjacent room to lower the temperature and humidity in the machine room.
- If the unit is installed in a room with good airtightness, negative pressure may be created in the room, which can hold the door shut. Create an air passage to prevent negative pressure from developing in the room.

(2) Spacing

• PFAV-P250,500VM-E (Unit mm)

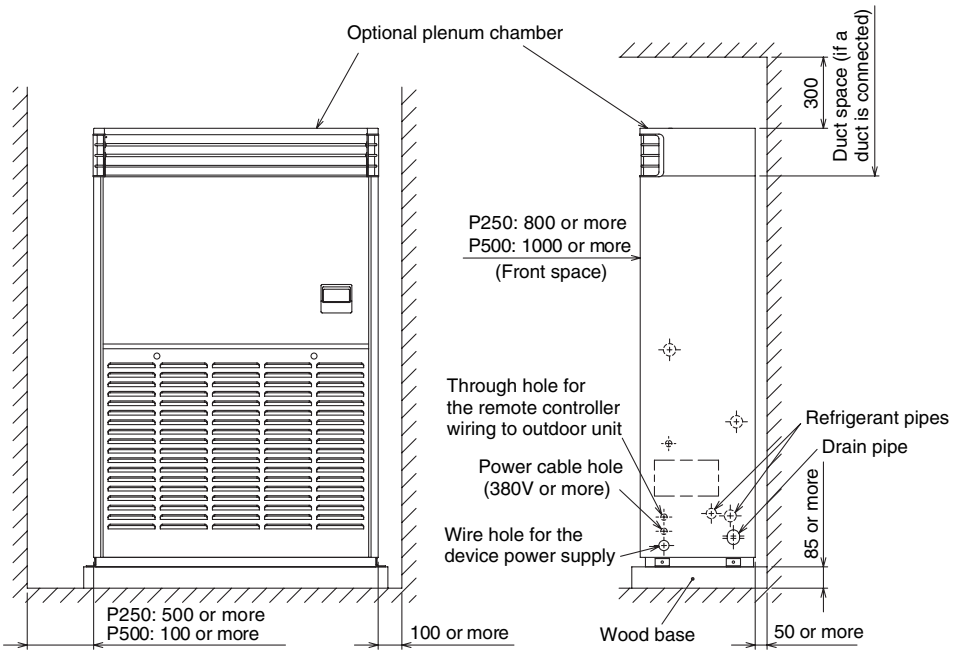

• PFAV-P300,600VM-E-F (Unit mm)

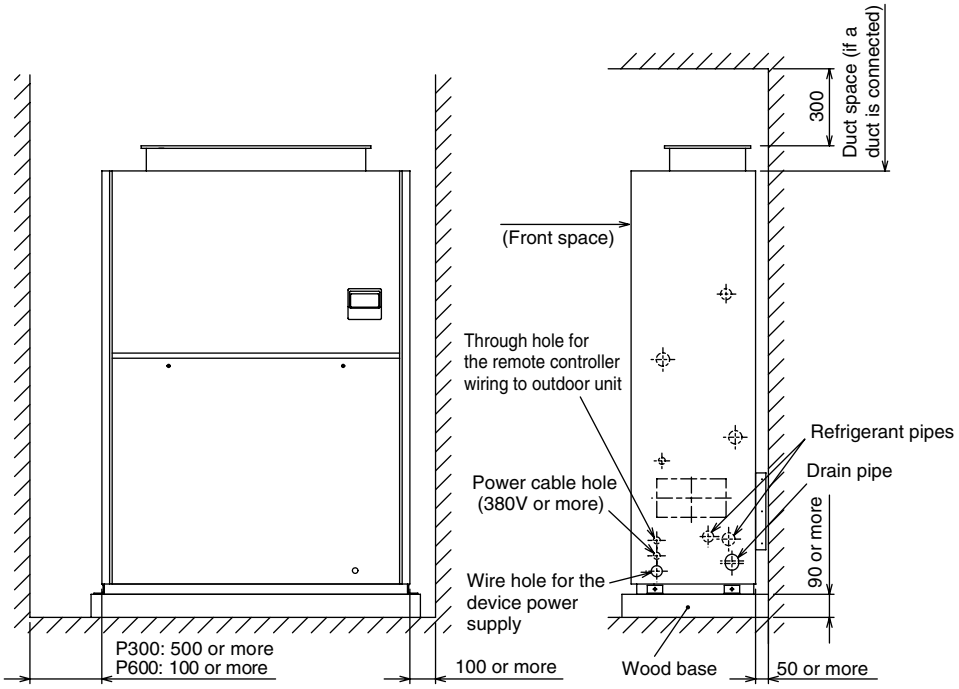

• PFAV-P750VM-E (Unit mm)
• PFAV-P900VM-E-F

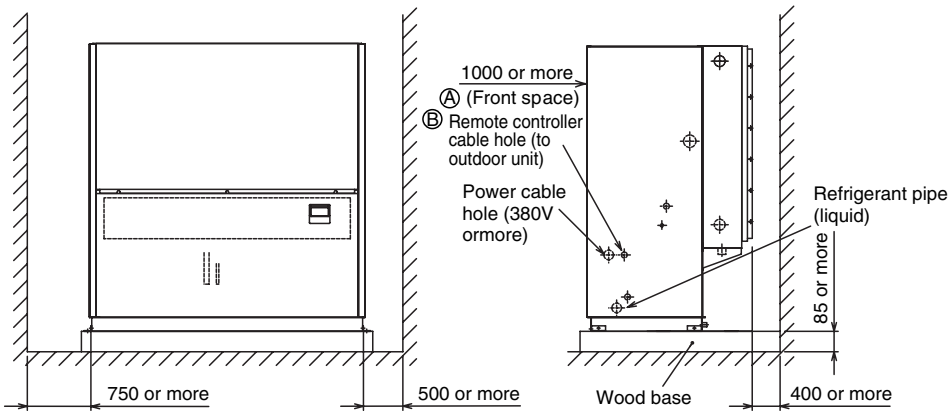

• Select a solid surface, and install the unit on a wood base at least 8.5 cm in thickness to allow for proper discharge of drain water and to prevent vibration from the air conditioning units from being transmitted to the floor.

⁎Secure additional clearance space for piping and wiring installation.

(3) Installing the Indoor Unit

⚠WARNING

Install the unit on a level surface.

- If the unit is installed on an incline, water leakage or malfunctions may result. Check for straightness with a level.

⚠WARNING

Do not stand on the unit.

- You may fall down or the item may fall, causing injury.

⚠CAUTION

Properly dispose of packing materials.

- Pallets and the nails on the pallets can pose the risk of injury.
- Plastic bags can pose suffocation and choking hazards: keep out of the reach of children. Tear the plastics bags before disposing of them.

⚠CAUTION

Exercise caution when transporting units.

- Products weighing 20 kg[45 lbs] or more should not be carried by one person.
- Do not carry the product by the PP bands that are used on some packages.
- To reduce the risk of cuts, keep your hands away from the heat exchanger fins.
- When using a crane or other hoisting equipment to lift a unit, always suspend the unit from four corners.

(1) Installation

- Do not unpack indoor units until they have been transported to the installation site.
- Use a forklift to transport the units.
- Install anchor bolts (locally procured).

  Anchor bolt size

  P250, P500, P300-F, P600-F : ø8 (M8 screw)

  P750, P900-F : ø10 (M10 screw)
- Be sure to install indoor units on a level surface. Since the center of gravity of the unit is in the middle of the unit, if the units are tilted they may fall.

Caution when connecting a duct

- Install a canvas duct between the unit and the duct.
- Use non-flammable parts for the duct.
- Provide sufficient heat/sound insulation to ducts and flanges.
- Avoid using ducts made of flexible aluminum or similar lightweight materials. They may vibrate and produce noise.

Notes on when an optional plenum chamber is installed

The unit described in this manual is designed to be used with a duct. When an Optional plenum chamber is used, an adjustment of the pulley is required.

- Refer to the manual that came with the plenum chamber for how to install it.

Notes on how to remove the top front panel on the unit (P250, P500, P300-F,P600-F models)

Before removing the top front panel (panel with a built-in remote controller) to adjust or replace the pulley or belt, or to install optional parts, remote controller cables need to be disconnected.
Take the following procedures to remove the panel.

(1) Loosen the two securing screws on the bottom front panel, pull the front panel forward, and remove the panel by pulling the panel up and forward.
(2) Disconnect the remote controller connector A in the figure below.
  ⁎ Be sure to disconnect the connector before removing the top front panel to prevent the remote controller cable from being damaged.
(3) Remove the two fixing screws on the top front panel and pull open the panel bottom, and then pull up the remote controller cable (connector A).
(4) Pull up the top front panel to remove it.
  ⁎ Use caution not to place the panel on the cables or connector.

Note : Support the bottom front panel to prevent it from falling forward when removing the securing screws.

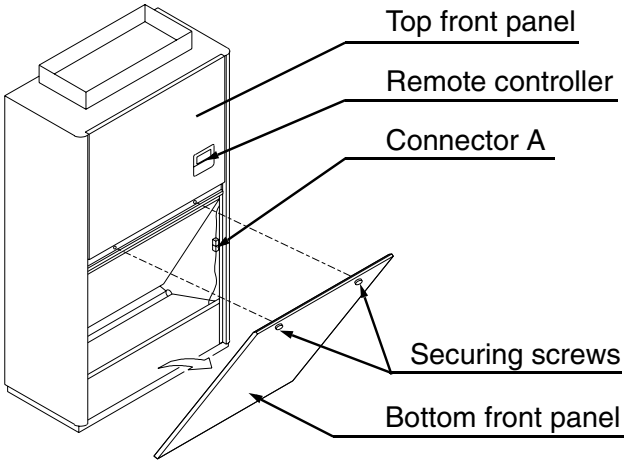

Important notes on pulleys and pulley belts

- **Adjusting the variable-width pulley**

Adjust the PC ø of variable-width pulley according to the procedures described below.

①Loosen the setscrew holding the fixed and the sliding discs in place.

②Turn the sliding disc counter-clockwise until no gap is left (0 mm) between the fixed and the sliding discs.

③Select the PC ø in Table 1 that is closest to the one to be used. Once the PC ø has been selected, see the number of turns to apply that corresponds to the selected PC ø to determine how many turns to apply to the sliding disc.

④Fix the fixed and the sliding discs in place with the setscrew. (Tightening torque:13.5 N·m)
Let the tip of the setscrew rest in the V-shaped notch on the flat part of the fixed disc to hold the sliding disc in position.
Apply Screw Lock (field supplied) to the setscrew to keep it from coming unscrewed. (Screwlock: ThreeBond 1322N or its equivalent)

⑤Perform a test run, and check that the pulley is not loose. When the test run is completed, check the setscrew for looseness.

Note: Check that the desired rotation speed is in the operating range as indicated in the fan performance diagram. (If the rotation speed exceeds the operating range, the overcurrent relay on the fan will trip.)

⚠ CAUTION

Note 1 The fixed disc of the pulley must be placed on the motor side.
(Do not place the sliding piece on the motor side.) See Figure 1.

Note 2 After adjusting the width of the variable-width pulley, also adjust the alignment (centering).
(Using a ruler, align the pulleys so that the width of $\alpha 1$ and $\alpha 2$ in Figure 2 is the same.)

Note 3 The pulley groove width in Table 1 are reference values. Adjust the PC ø of the variable-width pulley by applying the specified number of turns.

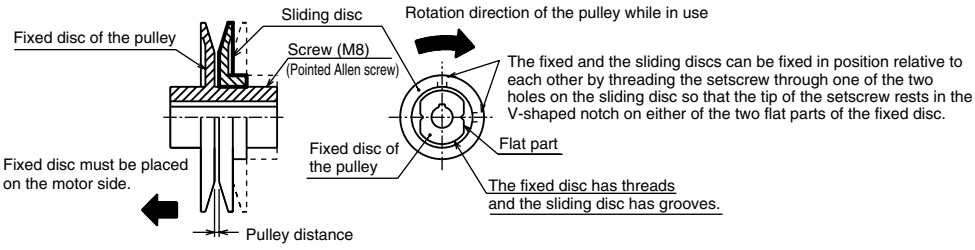

(Figure 1) Variable-width pulley

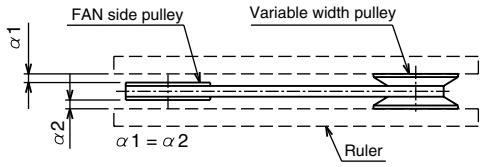

(Figure 2) Adjusting the horizontal alignment of the variable-width pulley

(Table 1) PC ø of variable-width pulleys

Number of turns to apply to the sliding disc	0	1/4	1/2	3/4	1	1·1/4	1·1/2	1·3/4	2	2·1/4	2·1/2	2·3/4	3	3·1/4	3·1/2	3·3/4	4	4·1/4	4·1/2	4·3/4
Pulley distance (mm)	(0)	(0.4)	(0.8)	(1.1)	(1.5)	(1.9)	(2.3)	(2.6)	(3.0)	(3.4)	(3.8)	(4.1)	(4.5)	(4.9)	(5.3)	(5.6)	(6.0)	(6.4)	(6.8)	(7.1)
PC ø of variable-width pulleys for 1.5 kW motor	140.0	138.8	137.5	136.3	135.1	133.9	132.6	131.4	130.2	129.0	127.7	126.5	125.3	124.1	122.8	121.6	120.4	119.1	117.9	116.7
PC ø of variable-width pulleys for 2.2 kW motor	150.0	148.8	147.5	146.3	145.1	143.9	142.6	141.4	140.2	139.0	137.7	136.5	135.3	134.1	132.8	131.6	130.4	129.1	127.9	126.7

• Horizontal pulley alignment and proper belt tension

(1) The fan pulley and the motor pulley must be aligned to meet the criteria shown in Figure 1 and Table 1.
(2) Set the tension for the V-belt so that the deflection force falls within the range as shown in the table in Ⅱ-7.
(3) After the belt has been broken in on the pulley (after 24 to 28 hours of operation), check the belt for looseness and adjust the belt tension as specified in step (2) above as necessary. When setting the tension for a new belt, set it to a value 1.15 times the deflection force W.
(4) After the initial adjustment of the belt as described in step (3) above, readjust the belt tension every 2000 hours of operation. [The belt is due for replacement when the belt has been stretched by 2% of its original length, including the initial stretch of 1%. (Approx. 5000 hours of operation)]

Note: Apply Screwlock (not supplied) to the retention screw on the pulley to prevent the screw from loosening. Tighten the screw to the torque of 13.5 N·m. (Screwlock: Equivalent to ThreeBond 1322N)

(Table 1) Horizontal alignment of the pulley

Degree of parallelism / Pulley	K (arc-minute)	Note
Cast iron pulley	10 or smaller	Equivalent to 3 mm [1/8 in.] of displacement per 1 m[3-1/4 ft]

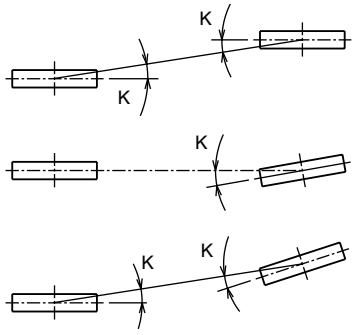

(Figure 1) Pulley's degree of parallelism

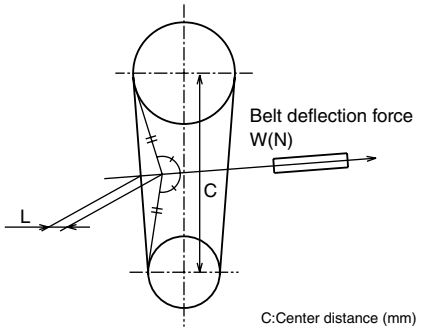

(Figure 2) Belt tension

• Tools for Adjusting Belt Tension

To adjust the belt tension for P500-model, tools in certain size (as shown in Fig. 3-1/3-2) are required for loosening the motor base fixing bolts.

[Fig. 3-1] Extention bar

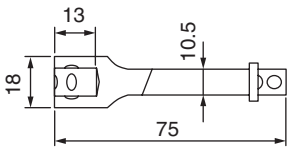

[Fig. 3-2] Ratchet handle/9.5mm (3/8")

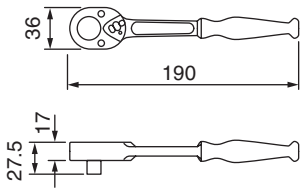

• Fan bearing (P750, P900-F)

Fan bearing needs periodical grease supply in every 2000 hours. Supply grease using a grease gun from a fill opening at the fan bearing. (Fig.4)
Recommended grease: Showa Shell Sekiyu "Alvania No.3"

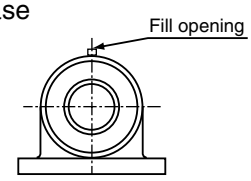

Fig.4 Bearing

(4) Separating the indoor unit to allow for easy transportation

Instructions for separating the P500, P600-F indoor unit into parts

The indoor unit can be separated into the base block, fan block, and other parts.
Place the unit on a level surface before separating the unit.
The dimension of the base block after it is separated from the other parts is marked with ✻ in the figure below.

Base block net weight

	Net weight
P500, P600-F	70kg[155lbs]

1. Take the following steps to separate the unit, referring to the figures below.
   a. Remove the decoration panels ① through ⑥ in that order.
   b. Remove the fan block fixing screws located in the positions as shown in the figure, and pull the fan block ⑦ forward to remove it.
   Please note that the fan block on the P500 model weighs 118 kg[261 lbs] (P600-F model weighs 93kg[205 lbs].).
   c. Remove the beam ⑧.
   d. Remove the side panels ⑨ and ⑩ on the right and left.

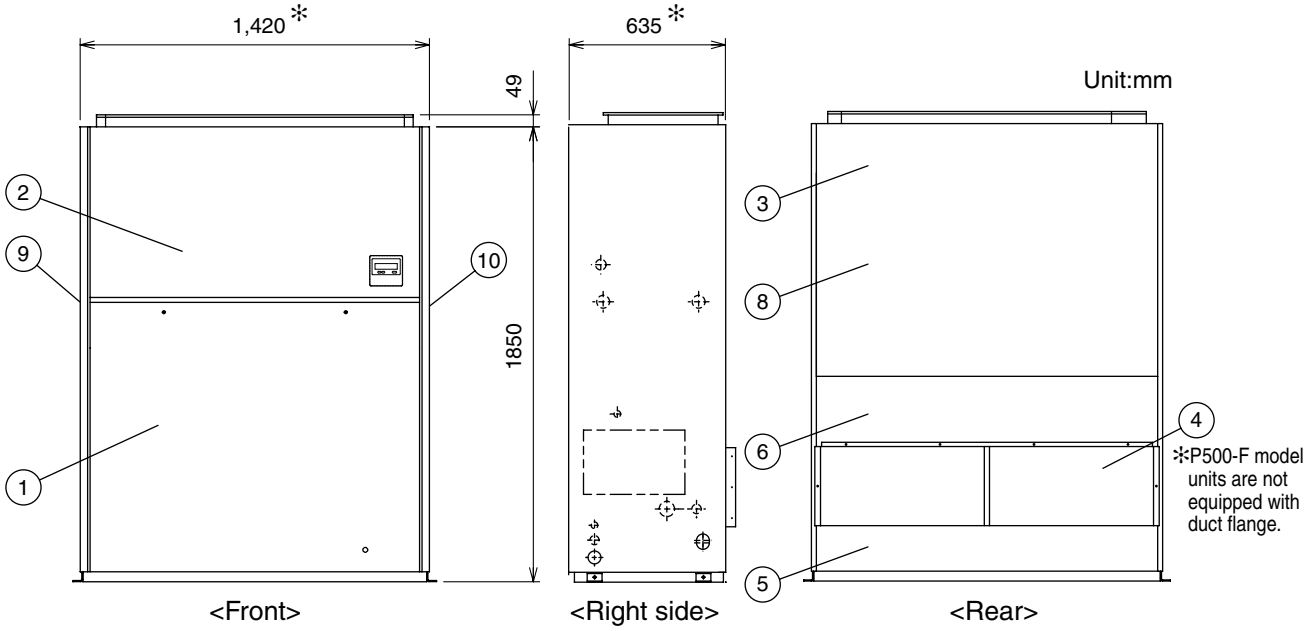

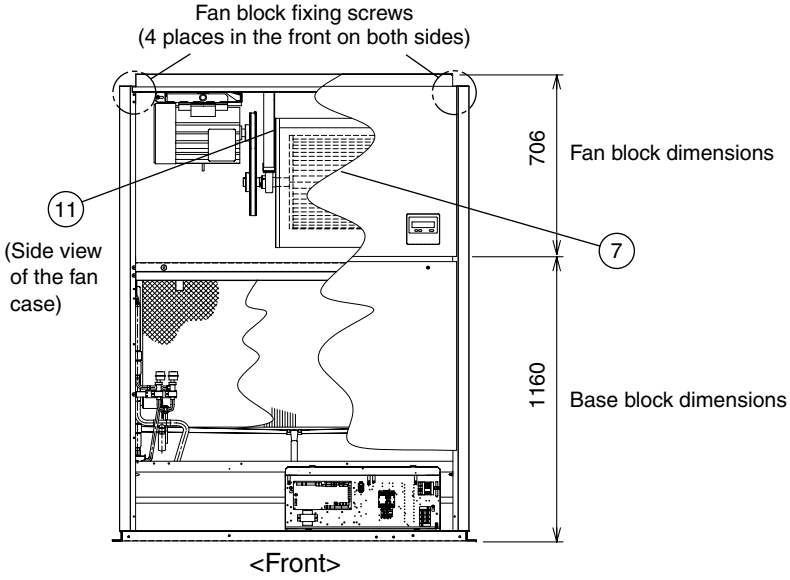

The above step completes the procedure.
Use caution not to damage or scratch the unit during transportation.

2. Reassemble the unit in the reverse order as above.
   Replace all fixing screws and bolts back in, and tighten each of them to the proper tightening torque.
3. Items to be checked during test run
   Check for abnormal sounds and water leakage after test run.

• Instructions for separating the P750, P900-F indoor unit into parts

The heat exchanger block can be separated from the main body of indoor unit (Brazing is required).
Place the unit on a level surface before separating the unit.
→→→ indicates the surface to split up.
The dimensions of the base block after being separated from the heat exchanger block are marked with ✻ in the figure below.

Unit weight

	Weight
PFAV-P750VM-E	459
PFAV-P900VM-E-F	437

The heat exchanger block actually cannot be separated in whole as the figure shows.
Each part needs to be removed to complete the separation.

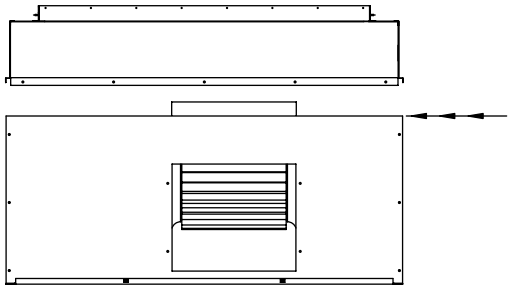

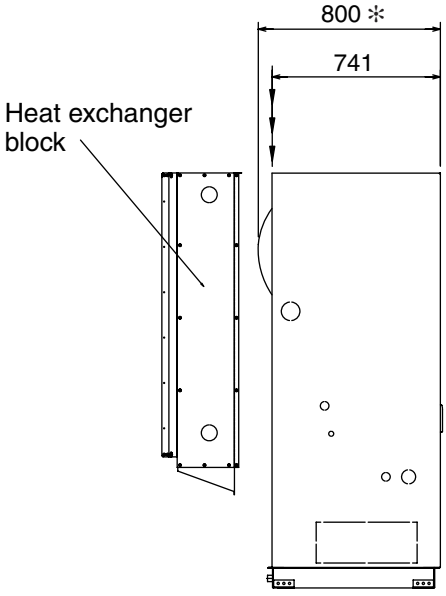

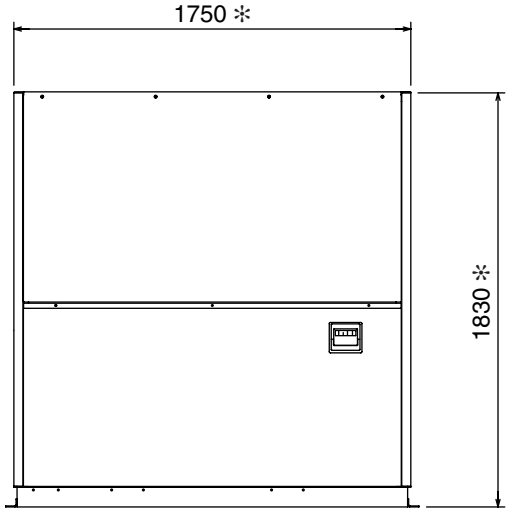

1. Take the following steps to separate the heat exchanger from the main unit referring to the figures in the next page.
   a. Remove filter plates ① (2 screws are attached each) on the right and left side of the heat exchanger block and take out the filter.
   b. Remove air inlet flanges ②③, and then decoration panels ④ through ⑨ in number order.
   c. Cut off the part of the charge pipe connected to the field piping to reduce internal pressure. Then, debraze the piping part shown in the figure (on the very left in the next page) and disconnect the thermistor wiring. Thermistors are mounted both on the right and left side of the heat exchanger, three for each.
      ✻ Braze pipes under nitrogen purge to avoid oxidation, and keep contaminants and water out of the pipes.
   d. Unscrew the screws of the heat exchanger ⑩ fixed to the drain pan B⑫ and remove the heat exchanger.
   e. Unscrew the screw on the drain pan F ⑪. Slightly lift up the drain pan B ⑫ and remove it from the F ⑪.

f. Remove supporting plates ⑬ on both sides of the drain pan B ⑫.
This is the separation process. Use caution not to damage or scratch the unit during transportation. Take extra precautions when transporting the heat exchanger to prevent damaging its fin or heat transfer tube from shock.

2. Reassemble in the reverse order as above.
Replace all fixing screws and bolts back in, and tighten each of them to the proper tightening torque. Also, replace the thermistors back on with their wirings properly reconnected and fixed.
3. Do not compress the unit during separation or transportation.
After unit transportation or reassembling, check that the fan parts (pulley/fan/bearing) have no loosen screws and pulleys are in proper position so that the V-belt will not be damaged.
4. Sound and water leakage check
Check for abnormal sounds and water leakage after test run.

Unit weight rate

	Base block weight	Heat exchanger weight
PFAV-P750VM-E	310	40
PFAV-P900VM-E-F	288	40

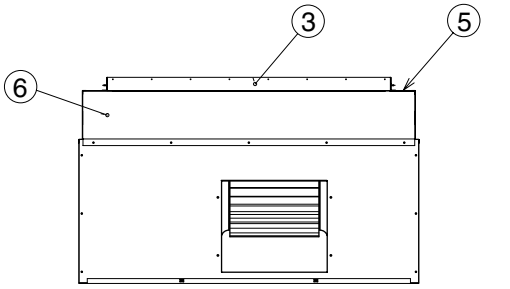

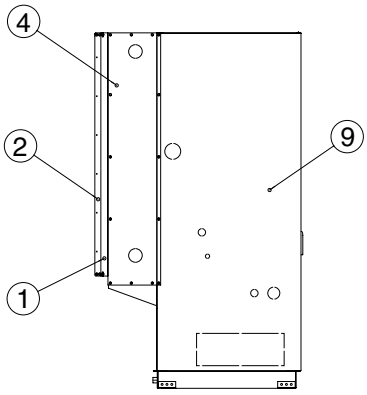

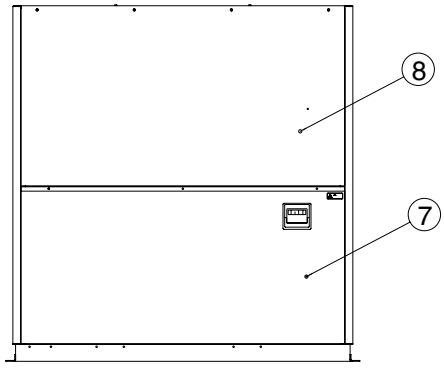

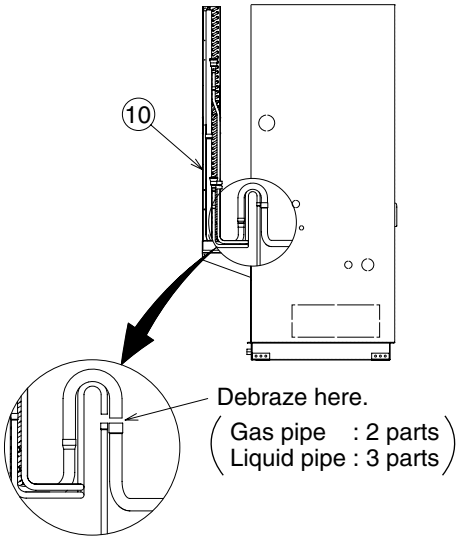

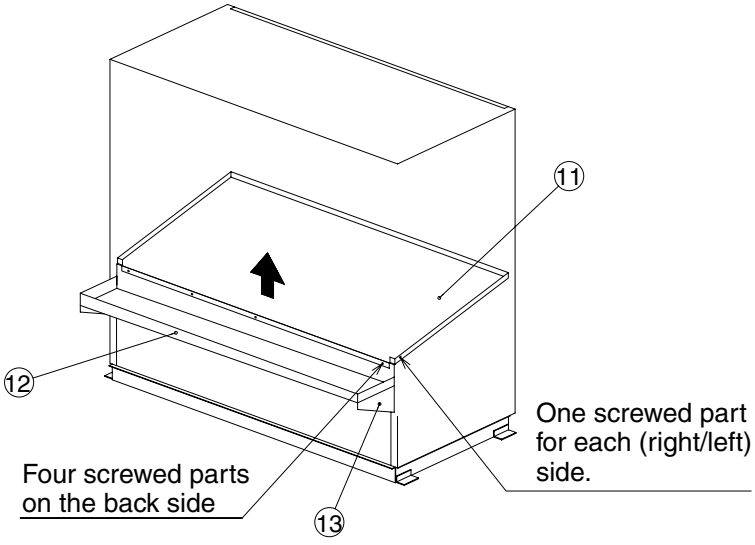

(5) Internal diagram

- PFAV-P250VM-E
- PFAV-P300VM-E-F

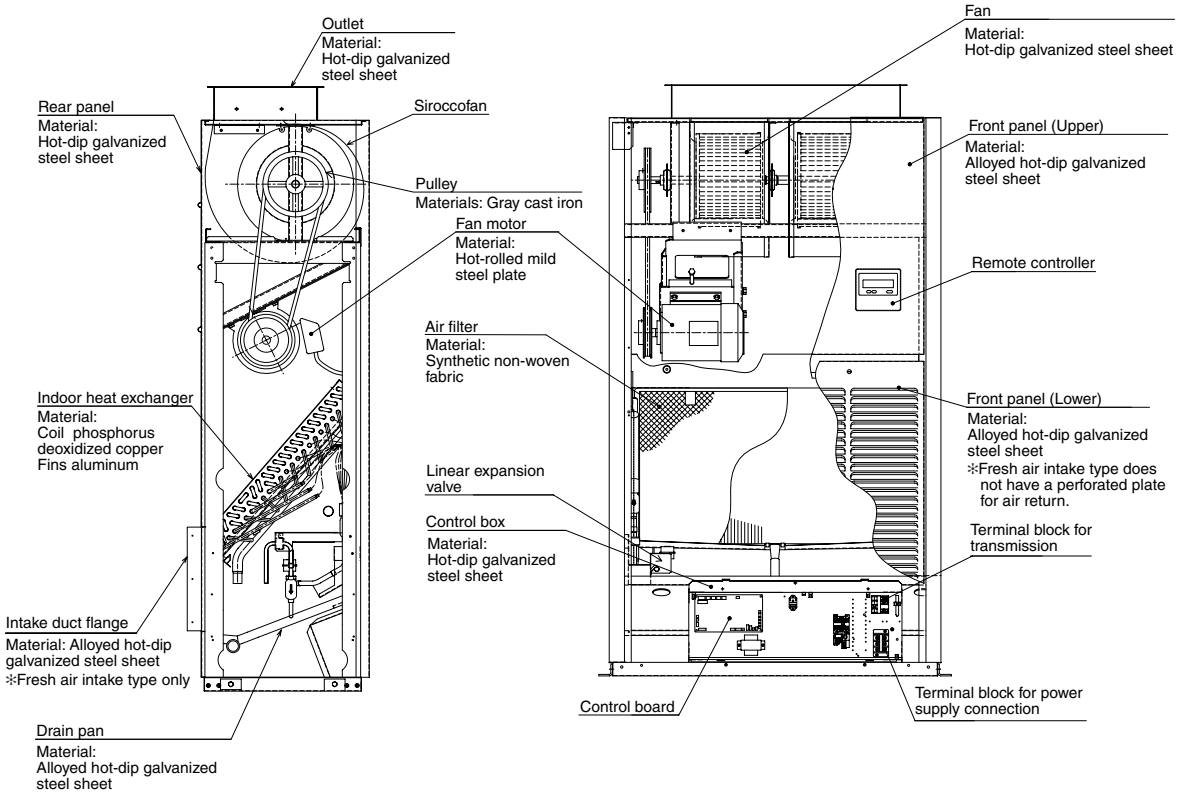

- PFAV-P500VM-E
- PFAV-P600VM-E-F

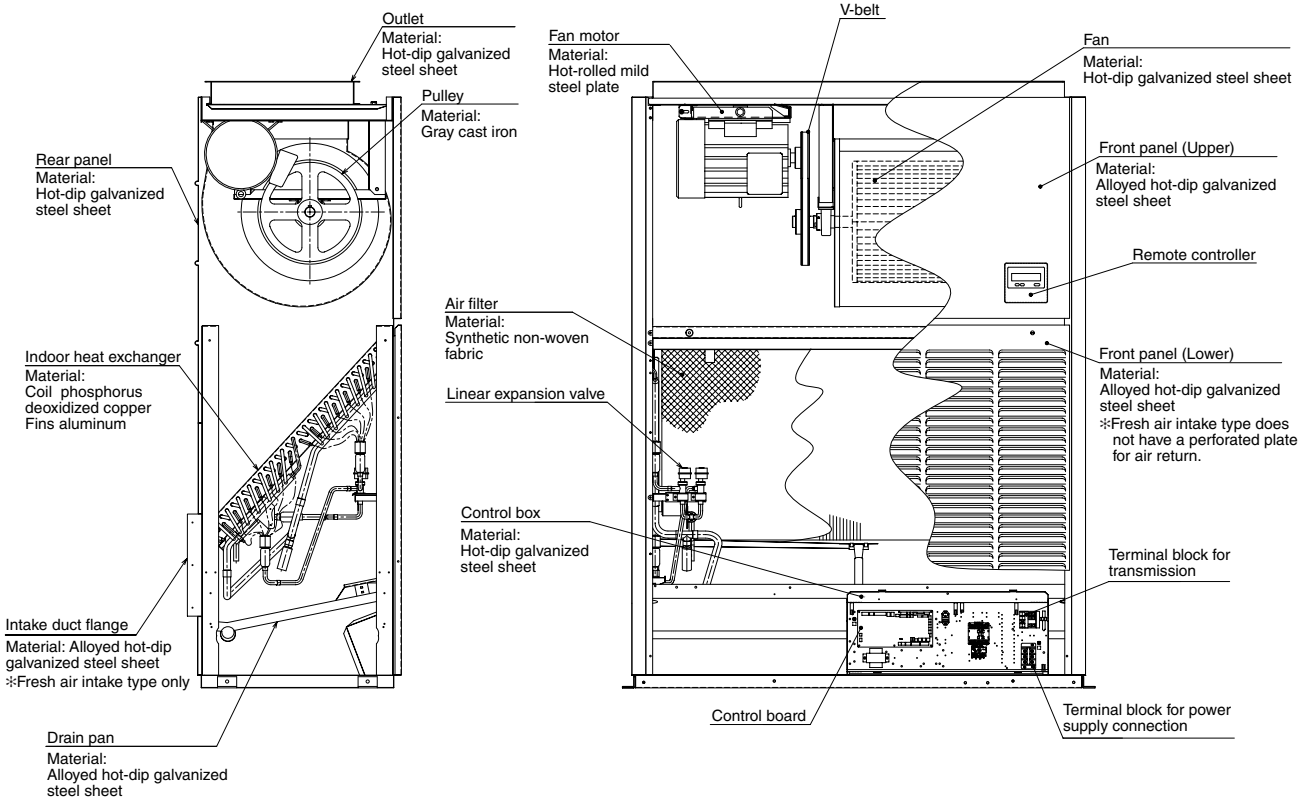

- PFAV-P750VM-E
- PFAV-P900VM-E-F

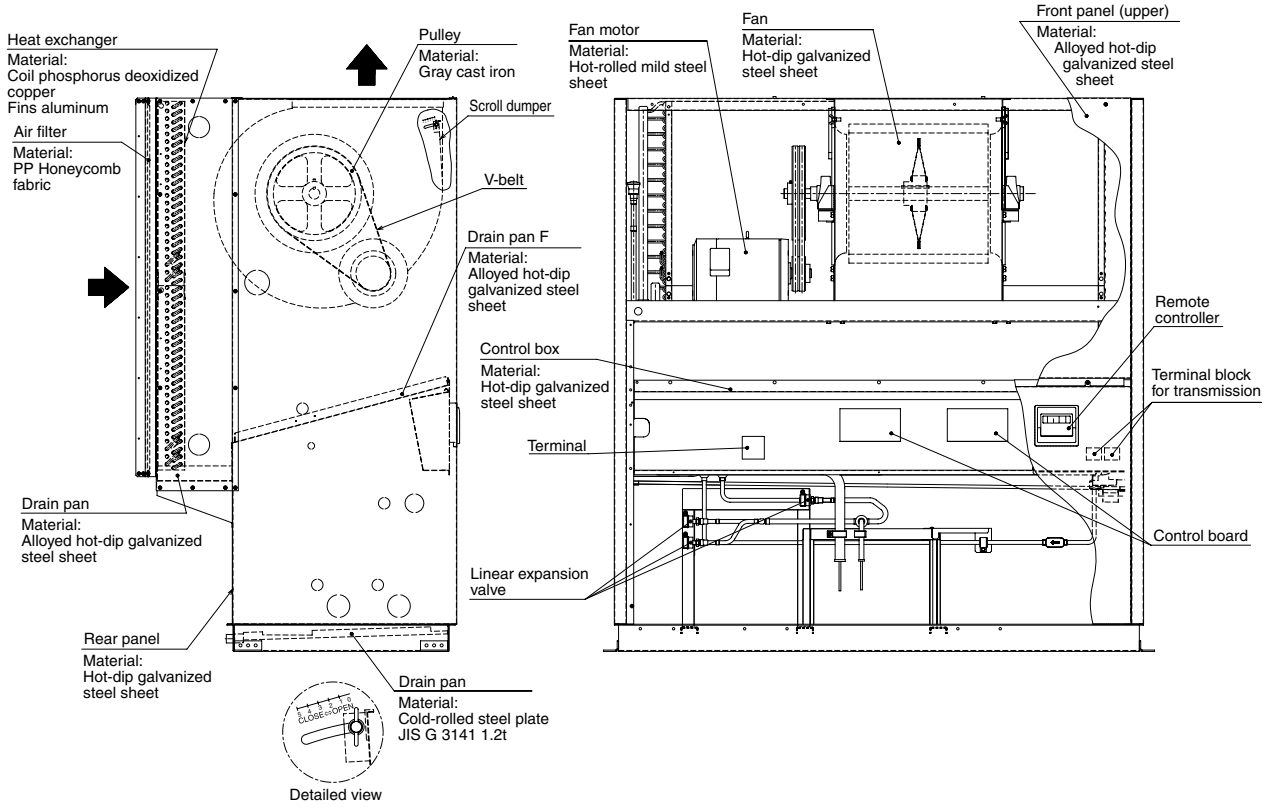

Ⅶ. Piping design

1. R410A Piping material

Refrigerant pipe for PFAV shall be made of phosphorus deoxidized copper, and has two types.
A. Type-O : Soft copper pipe (annealed copper pipe), can be easily bent with human's hand.
B. Type-1/2H pipe : Hard copper pipe (Straight pipe), being stronger than Type-O pipe of the same radical thickness.

The maximum operation pressure of R410A air conditioner is 4.30 MPa. The refrigerant piping should ensure the safety under the maximum operation pressure. MITSUBISHI ELECTRIC recommends pipe size as Table 1-1, or You shall follow the local industrial standard. Pipes of radical thickness 0.7mm or less shall not be used.

Table 1-1. Copper pipe size and radial thickness for R410A PFAV

Size (mm)	Size (inch)	Radial thickness (mm)	Pipe type
ø6.35	ø1/4"	0.8	Type-O
ø9.52	ø3/8"	0.8	Type-O
ø12.7	ø1/2"	0.8	Type-O
ø15.88	ø5/8"	1.0	Type-O
ø19.05	ø3/4"	1.2	Type-O
ø19.05	ø3/4"	1.0	Type-1/2H or H
ø22.2	ø7/8"	1.0	Type-1/2H or H
ø25.4	ø1"	1.0	Type-1/2H or H
ø28.58	ø1-1/8"	1.0	Type-1/2H or H
ø31.75	ø1-1/4"	1.1	Type-1/2H or H
ø34.93	ø1-3/8"	1.2	Type-1/2H or H
ø41.28	ø1-5/8"	1.4	Type-1/2H or H

* For pipe sized ø19.05 (3/4") for R410A air conditioner, choice of pipe type is up to you.

Flare

Due to the relative higher operation pressure of R410A compared to R22, the flare connection should follow dimensions mentioned below so as to achieve enough the air-tightness.

Flare pipe	Pipe size	A (For R410A) (mm[in.])
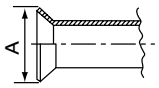	ø6.35 [1/4"]	9.1
	ø9.52 [3/8"]	13.2
	ø12.70 [1/2"]	16.6
	ø15.88 [5/8"]	19.7
	ø19.05 [3/4"]	24.0

Flare nut	Pipe size	B (For R410A) (mm[in.])
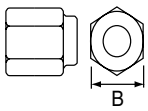	ø6.35 [1/4"]	17.0
	ø9.52 [3/8"]	22.0
	ø12.70 [1/2"]	26.0
	ø15.88 [5/8"]	29.0
	ø19.05 [3/4"]	36.0

2. Piping Design

1-2-1. PUHY-P250 Piping

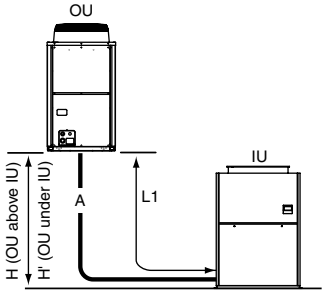

Fig. 1-2-1A Piping scheme

Note1. "-"
Note2. If the A/C system is designed to use cooling mode under outdoor temperature 0˚C, H'<=15m.
Note3. As bents cause pressure loss on transportation of refrigerant, fewer bents design is better;
Piping length needs to consider the actual length and equivalent length which bents are counted.
Equivalent piping length (m)=Actual piping length+"M" x Quantity of bent.

IU : Indoor unit , OU : Outdoor unit

Table1-2-1-1. Piping length **(m [ft.])**

Item	Piping in the figure	Max. length	Max. equivalent length
Farthest IU from OU (L1)	A	165 [541']	190 [623']
Height between OU and IU (OU above IU)	H	50 [164']	-
Height between OU and IU (OU under IU)	H'	40 [131']	-

OU: Outdoor Unit, IU: Indoor Unit

Table1-2-1-2. Bent equivalent length "M"

Outdoor Model	M (m/bent [ft./bent])
PUHY-P250	0.42 [1.38]

Table1-2-1-3. Piping "A" size selection rule **(mm [in.])**

Outdoor	Pipe(Liquid)	Pipe(Gas)
PUHY-P250=CMY-Y102L-G2	ø9.52 [3/8"] *1	ø22.20 [7/8"]

*1. A>=90m [295ft.], ø12.70mm [1/2in.]

Table1-2-1-4. Indoor unit piping size selection rule **(mm [in.])**

Indoor Unit size	Pipe(Liquid)	Pipe(Gas)
P250, P300-F *2	ø9.52 [3/8"]	ø22.20 [7/8"]

*2. "-F" indicates Fresh air intake type

1-2-2. PUHY-P500, 750 Piping

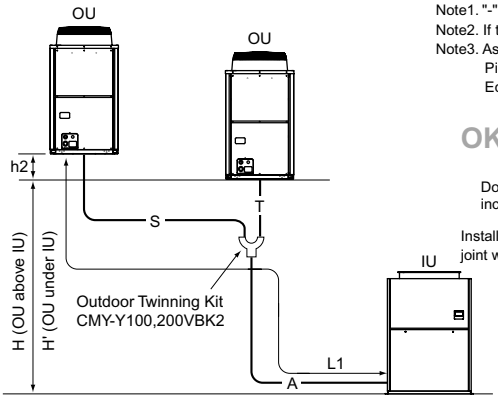

Fig. 1-2-1B Piping scheme

Note1. "-"
Note2. If the A/C system is designed to use cooling mode under outdoor temperature 0˚C, H'<=15m.
Note3. As bents cause pressure loss on transportation of refrigerant, fewer bents design is better;
Piping length needs to consider the actual length and equivalent length which bents are counted.
Equivalent piping length (m)=Actual piping length+"M" x Quantity of bent.

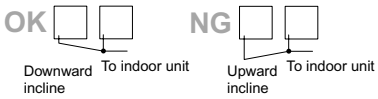

Install the pipes from the outdoor unit to the branch joint with a downward incline.

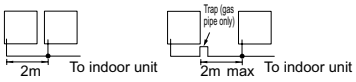

If the length of pipe between the branch joint and outdoor unit exceeds 2 m, provide at rap at a distance 2 m or less from the branch joint.

IU : Indoor unit , OU : Outdoor unit

Table1-2-2-1. Piping length **(m [ft.])**

Item	Piping in the figure	Max. length	Max. equivalent length
Distance between OU and OU	S+T	10[32']	-
Height between OU and OU	h2	0.1[0.3']	-
Farthest IU from OU (L1)	A	165 [541']	190 [623']
Height between OU and IU (OU above IU)	H	50 [164']	-
Height between OU and IU (OU above IU)	H'	40 [131']	-

OU: Outdoor Unit, IU: Indoor Unit

Table1-2-2-2. Bent equivalent length "M"

Outdoor Model	M (m/bent [ft./bent])
PUHY-P500	0.50 [1.64]
PUHY-P750	0.70 [2.29]

Table1-2-2-3. Piping "A" size selection rule **(mm [in.])**

Outdoor	Pipe(Liquid)	Pipe(Gas)
CMY-Y100VBK2	ø15.88[5/8"]	ø28.58[1-1/8"]
CMY-Y200VBK2	ø19.05[3/4"]	ø34.93[1-3/8"]

CMY-Y100VBK2; PUHY-P500
CMY-Y200VBK2; PUHY-P750

Table1-2-2-4. Indoor unit piping size selection rule **(mm [in.])**

Indoor Unit size	Pipe(Liquid)	Pipe(Gas)
P500, P600-F *	ø15.88 [5/8"]	ø28.58 [1-1/8"]
P750, P900-F *	ø19.05 [3/4"]	ø34.93 [1-3/8"]

* "-F" indicates Fresh air intake type

1-2-3. PUHY-P-YHM's refrigerant charging calculation

Sample connection (with PFAV-P600VM-E-F)

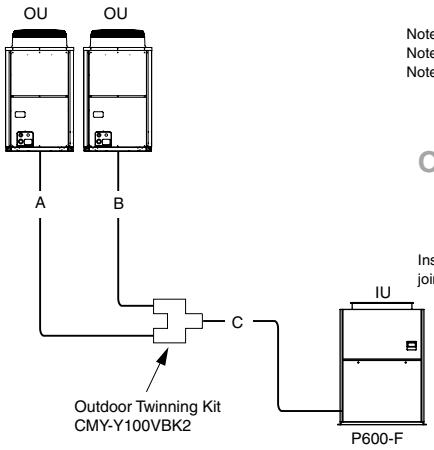

Note1. "-"
Note2. If the A/C system is designed to use Cooling-mode under Outside temperature 0˚C, H'<=15m.
Note3. As bents cause pressure loss on transportation of refrigerant, fewer bents design is better;
Piping length needs to consider the actual length and equivalent length which bents are counted.
Equivalent piping length (m)=Actual piping length+"M" x Quantity of bent.

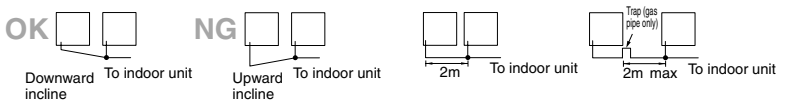

Install the pipes from the outdoor unit to the branch joint with a downward incline.

If the length of pipe between the branch joint and outdoor unit exceeds 2 m, provide at rap at a distance 2 m or less from the branch joint.

■ Amount of refrigerant to be charged

Refrigerant for extended pipes (field piping) is not factory-charged to the outdoor unit. Add an appropriate amount of refrigerant for each pipe on site.

Record the size of each liquid pipe and the amount of refrigerant that was charged on the outdoor unit for future reference.

■ Calculating the amount of refrigerant to be charged

- The amount of refrigerant to be charged is calculated with the size of the on-site-installed liquid pipes and their length.
- Calculate the amount of refrigerant to be charged according to the formula below.
- Round up the calculation result to the nearest 0.1kg. (i.e., 16.08 kg = 16.1 kg)

<Amount of refrigerant to be charged>

■ Calculating the amount of refrigerant to be charged

Total length of ø19.05 liquid pipe x 0.29	+	Total length of ø15.88 liquid pipe x 0.2	+	Total length of ø12.7 liquid pipe x 0.12	+	Total length of ø9.52 liquid pipe x 0.06	+	Total length of ø6.35 liquid pipe x 0.024	+
(m)x0.29(kg/m)		(m)x0.2(kg/m)		(m)x0.12(kg/m)		(m)x0.06(kg/m)		(m)x0.024(kg/m)	

Model connected indoorunits	Amount for the indoor unit
P250, P300-F	3.0kg
P500, P600-F	5.0kg
P750, P900-F	8.0kg

■ Amount of factory-charged refrigerant

Outdoor unit model	Charged amount
P250 model	9.0kg
P350 model	11.5kg
P400 model	11.5kg

■ Sample calculation

A : ø9.52 3m
B : ø9.52 2m
C : ø15.88 2m

Total length for ø15.88 C=2m
each pipe size : ø9.52 A+B=5m
This yields the following result : =2x0.2+5x0.06+5.0
=5.7kg

Ⅷ. Wiring Design

1. External wiring diagram

(1) Power supply examples

•PUHY-P250YHM-A + PFAV-P300VM-E-F

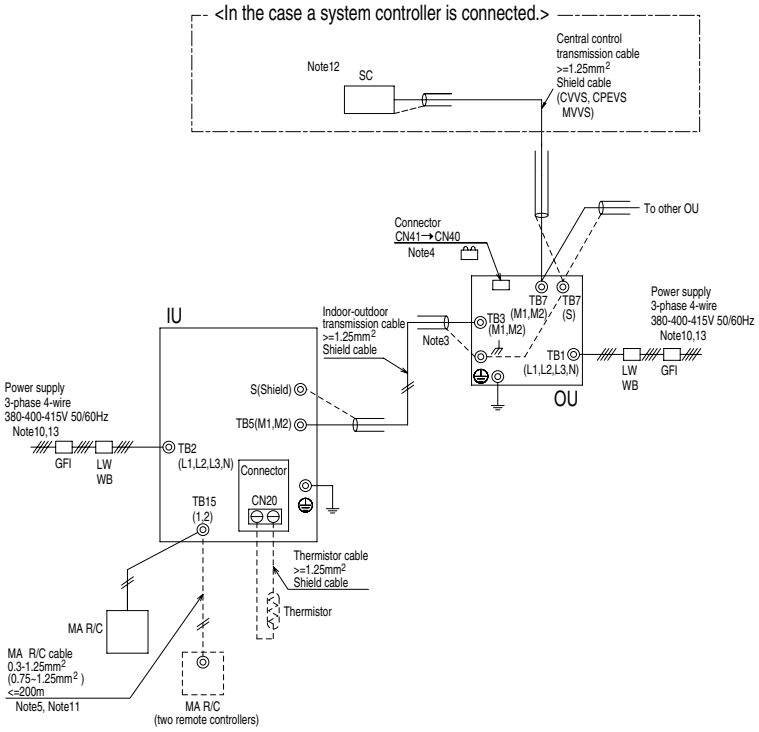

Note:
1 The transmission cable is not-polarity double-wire.
2 Symbol ◎ means a screw terminal for wiring.
3 The shield wire of transmission cable should be connected to the grounding terminal at Outdoor unit. All shield wire of M-Net transmission cable among Indoor units should be connected to the S terminal at Indoor unit or all shield wire should be connected together. The broken line at the scheme means shield wire.
4 When the Outdoor unit connected with system controller, power-supply to TB7 of the outdoor unit(s) is needed. The connector change from CN41 to CN40 at one of the outdoor units will enable the outdoor unit to supply power to TB7, or an extra power supplying unit PAC-SC50KUA should be used. The transmission cable (above 1.25mm^2, shielded, CVVS/CPEVS/MVVS) among Outdoor units and system controllers is called central control transmission cable. The shield wire of the central control transmission cable must be grounded at the Outdoor unit whose CN41 is changed to CN40.
5 MA R/C transmission cable (0.3-1.25mm^2) must be less than 200m in length, while ME R/C transmission cable (0.3-1.25mm^2) must be less than 10m in length. But transmission cable to the ME R/C can be extend using a M-NET cable (>=1.25mm^2) when the length is counted in the M-Net length. Both Compact MA and ME R/C transmission cables size 0.75~1.25mm^2 in thickness.
6 MA remote controller and ME remote controller should not be grouped together.
7 If using 1 or 2 (main/sub) MA remote controller to control more than 1 Indoor unit, use MA transmission cable to connect all the TB15 terminals of the Indoor units. It is called "Grouping".
8 Indoor board consumes power from TB3. The power balance should be considered according to 3.M-NET control.
9 If Transmission booster is needed, be sure to connect the shield wires to the both sides to the booster.
10 The critical current for choosing power source equipment is approximate 1.4 times of total rated current of the Outdoor unit(s) or Indoor unit(s).
11 Numbers shown with ( ) indicates a diameter of the compact remote controller.
12 When System controller (SC) is connected to the system, turn the SW2-1 on.
13 The phases of electricity power must be confirmed to be right used. Phase-reverse, or phase-missing could break the controllers.

Symbol	
GFI	Ground-fault interrupter
LW	Local switch
BC	Breaker capacity
OCP	Over-current protector
WB	Wiring breaker
NFB	Non-fuse breaker
OU	Outdoor unit
IU	Indoor unit
SC	System controller
MA R/C	MA remote controller

Model	Ground-fault interrupter *1, *2	Local switch		Wiring breaker	Minimum Wire thickness	
		BC <A>	OCP*3 <A>	(NFB) <A>	Power wire <mm2>	Earth wire <mm2>
PUHY-P250	30A 100mA 0.1sec. or less	32	32	30	4	4

*1 The Ground-fault interrupter should support Inverter circuit. (e.g. Mitsubishi Electric's NV-C series or equivalent).
*2 Ground-fault interrupter should combine using of local switch or wiring breaker.
*3 It shows data for B-type fuse of the breaker for current leakage.

•PUHY-P500YSHM-A + PFAV-P600VM-E-F

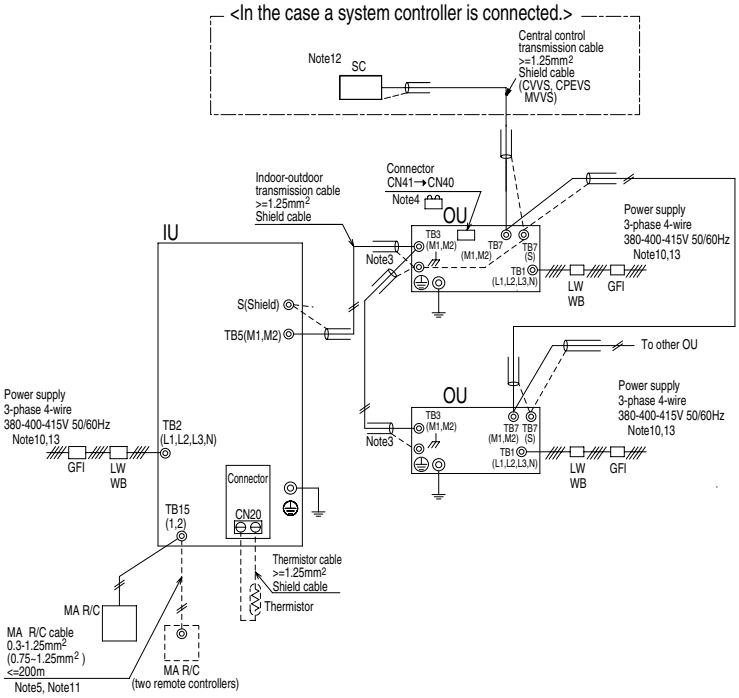

Note:
1 The transmission cable is not-polarity double-wire.
2 Symbol ◎ means a screw terminal for wiring.
3 The shield wire of transmission cable should be connected to the grounding terminal at Outdoor unit. All shield wire of M-Net transmission cable among Indoor units should be connected to the S terminal at Indoor unit or all shield wire should be connected together. The broken line at the scheme means shield wire.
4 When the Outdoor unit connected with system controller, power-supply to TB7 of the outdoor unit(s) is needed. The connector change from CN41 to CN40 at one of the outdoor units will enable the outdoor unit to supply power to TB7, or an extra power supplying unit PAC-SC50KUA should be used. The transmission cable (above 1.25mm^2, shielded, CVVS/CPEVS/MVVS) among Outdoor units and system controllers is called central control transmission cable. The shield wire of the central control transmission cable must be grounded at the Outdoor unit whose CN41 is changed to CN40.
5 MA R/C transmission cable (0.3-1.25mm^2) must be less than 200m in length, while ME R/C transmission cable (0.3-1.25mm^2) must be less than 10m in length. But transmission cable to the ME R/C can be extend using a M-NET cable (>=1.25mm^2) when the length is counted in the M-Net length. Both Compact MA and ME R/C transmission cables size 0.75~1.25mm^2 in thickness.
6 MA remote controller and ME remote controller should not be grouped together.
7 If using 1 or 2 (main/sub) MA remote controller to control more than 1 Indoor unit, use MA transmission cable to connect all the TB15 terminals of the Indoor units. It is called "Grouping".
8 Indoor board consumes power from TB3. The power balance should be considered according to 3.M-NET control.
9 If Transmission booster is needed, be sure to connect the shield wires to the both sides to the booster.
10 The critical current for choosing power source equipment is approximate 1.4 times of total rated current of the Outdoor unit(s) or Indoor unit(s).
11 Numbers shown with ( ) indicates a diameter of the compact remote controller.
12 When System controller (SC) is connected to the system, turn the SW2-1 on.
13. The phases of electricity power must be confirmed to be right used. Phase-reverse, or phase-missing could break the controllers.

Symbol	
GFI	Ground-fault interrupter
LW	Local switch
BC	Breaker capacity
OCP	Over-current protector
WB	Wiring breaker
NFB	Non-fuse breaker
OU	Outdoor unit
IU	Indoor unit
SC	System controller
MA R/C	MA remote controller

Model	Ground-fault interrupter *1, *2	Local switch		Wiring breaker	Minimum Wire thickness	
		BC <A>	OCP*3 <A>	(NFB) <A>	Power wire <mm^2>	Earth wire <mm^2>
PUHY-P250	30A 100mA 0.1sec. or less	32	32	30	4	4
PUHY-P350	40A 100mA 0.1sec. or less	40	40	40	6	6
PUHY-P400	60A 100mA 0.1sec. or less	63	63	60	10.0	10.0

*1 The Ground-fault interrupter should support Inverter circuit. (e.g. Mitsubishi Electric's NV-C series or equivalent).
*2 Ground-fault interrupter should combine using of local switch or wiring breaker.
*3 It shows data for B-type fuse of the breaker for current leakage.

2. Electrical work

(1) Power cable specifications

Thickness of wire for main power supply, capacities of the switch and system impedance

	Model	Minimum wire thickness (mm^2)			Breaker for current leakage	Local swtich (A)		Breaker for wiring (NFB) (A)
		Main cable	Branch	Ground		Capacity	Fuse	
Outdoor unit	PUHY-P250	4.0	-	4.0	30A 100mA 0.1sec. or less	32	32	30
	PUHY-P350	6.0	-	6.0	40A 100mA 0.1sec. or less	40	40	40
	PUHY-P400	10.0	-	10.0	60A 100mA 0.1sec. or less	63	63	60
indoor unit	PFAV-P250	1.5	-	1.5	20A 30mA 0.1sec. or less	16	16	20
	PFAV-P500	4.0	-	4.0	40A 100mA 0.1sec. or less	32	32	40
	PFAV-P750	10.0	-	10.0	50A 100mA 0.1sec. or less	50	50	50
	PFAV-P300-F	1.5	-	1.5	20A 30mA 0.1sec. or less	16	16	20
	PFAV-P600-F	1.5	-	1.5	20A 30mA 0.1sec. or less	16	16	20
	PFAV-P900-F	4.0	-	4.0	30A 30mA 0.1sec. or less	32	20	30

1. **Use dedicated power supplies for the outdoor unit and indoor unit. Ensure OC and OS are wired individually.**
2. **Bear in mind ambient conditions (ambient temperature,direct sunlight, rain water,etc.) when proceeding with the wiring and connections.**
3. **The wire size is the minimum value for metal conduit wiring. If the voltage drops, use a wire that is one rank thicker in diameter. Make sure the power-supply voltage does not drop more than 10%.**
4. **Specific wiring requirements should adhere to the wiring regulations of the region.**
5. **Power supply cords of parts of appliances for outdoor use shall not be lighter than polychloroprene sheathed flexible cord (design 245 IEC57). For example, use wiring such as YZW.**
6. **A switch with at least 3 mm contact separation in each pole shall be provided by the Air Conditioner installer.**

⚠ Warning:

- **Be sure to use specified wires for connections and ensure no external force is imparted to terminal connections. If connections are not fixed firmly, heating or fire may result.**
- **Be sure to use the appropriate type of overcurrent protection switch. Note that generated overcurrent may include some amount of direct current.**

⚠ Caution:

- **Some installation sites may require attachment of an earth leakage breaker for the inverter. If no earth leakage breaker is installed, there is a danger of electric shock.**
- **Do not use anything other than a breaker and fuse with the correct capacity. Using a fuse or wire of too large capacity may cause malfunction or fire.**

3. M-NET control

Control wiring depends on system configurations.

Be sure to read the section "4. An Example of a System to which an MA Remote Controller is connected" before starting wiring work.

(1) Types and maximum allowable length of cables

Control lines are categorized into two types: transmission line and remote controller line. Use the appropriate type of cables and observe the maximum allowable length specified for a given system.

If a noise source is located near the unit, place the unit as far away from the noise source as possible to reduce noise interference.

①Transmission line (M-NET transmission line)

Cable type	Facility type	All facility types
	Type	Shielded cable CVVS·CPEVS·MVVS
	Number of cores	2-core cable
	Cable size	1.25 mm²[AWG 16] min.
Maximum transmission line distance between the outdoor unit and the farthest indoor unit		200 m[656 ft] max.
Maximum transmission line distance for central control and Indoor-outdoor transmission line (Maximum line distance via outdoor unit)		500 m[1640 ft] max. *The maximum line distance from the power supply unit on the transmission line for central control to each outdoor unit or to the system controller is 200 m[656 ft] .

②Remote controller wiring

		MA remote controller
Cable type	Type	VCTF,VCTFK,CVV CVS,VVR,VVF,VCT
	Number of cores	2-core cable
	Cable size	0.3~1.25 mm²[AWG22 to 16] (Note 1)
Maximum total transmission line length		200 m[656 ft] max.

(Note.1) The use of cables that are 0.75 mm²[AWG 18] or smaller in diameter is recommended for easy handling.

(2) Switch settings and address settings

The need for switch settings depends on the system configuration. Be sure to read the section "4. An Example of a System to which an MA Remote Controller is connected" before starting wiring work.

Set the switches with the power to the unit turned off.

Changes that are made to the settings while the unit is being energized will not take effect, and the unit will not function properly.

①Address setting

The need for address settings and the address setting range depend on the system configuration. See "4. An Example of a System to which an MA Remote Controller is connected" for details.

Unit or controller		Mark	Address setting range	Setting procedure	Address set at time of shipment Model
Indoor unit	Main/Sub	IC	01 to 50 Note 1,4	For the indoor units of the same group, set the lowest address for the indoor unit to be used as the main, and set consecutive numbers for the addresses of indoor units.	※1
MA remote controller		MA	An address does not need to be set. (However, when operation is to be performed with two remote controllers, the main/sub selector settings need to be set.)		Main
Outdoor unit		OC OS	51 to 100 Note 2	Set an address equivalent to the lowest indoor unit address in the same refrigerant circuit system + 50. Set consecutive numbers for the addresses of outdoor units in the same refrigerant circuit system. OC and OS are differentiated automatically. (Note 3)	00
System controller	Centralized controller	TR, SC	0, 201 to 250	Any address within the address range on the left.	000
	System remote controller	SR, SC	201 to 250	Any address within the address range on the left.	201
	Schedule timer (M-NET compatible)	ST, SC	201 to 250	Any address within the address range on the left.	202
	ON/OFF remote controller	AN, SC	201 to 250	Set an address that is the smallest group number you want to control + “200”.	201
	Group remote controller	GR, SC	201 to 250	Set an address that is the smallest group number you want to control + “200”.	
	LM adapter	SC	201 to 250	Any address within the address range on the left.	247

Note 1: If an address is a duplicate of an indoor unit or outdoor unit of another refrigerant circuit system, set it to another address, which is within the setting range and is not in use.
Note 2: To set the address of an outdoor unit to “100,” set it as 50.
Note 3: The outdoor units OC and OS of the same refrigerant circuit system are differentiated automatically.
The order of OC and OS becomes from the one with the highest capacity. (If the capacity is the same, the order is from the one with the lowest address.)
Note 4: Two control boards are installed on P750-F and P900-F indoor units. Be sure to assign an address to the No.1 and No. 2 control boards so that the No. 2 control board address equals the No.1 control board address plus 1.

※1

P250, P500 P300-F, P600-F	P750 P900-F
No.1=00	No.1=01 No.2=02

②Connection of the power jumper on the outdoor unit (Factory setting: Power jumper is connected to CN41.)

System configuration	Connection to the system controller	Power supply device	Group operation of the indoor units connected to different outdoor units	Connection of the power jumper on the outdoor unit
Single refrigerant circuit system	——	——	——	Leave the power jumper on CN41 as it is.

③Setting the central control switch for outdoor units

System configuration	Central controller switch settings (SW2-1) (Note 2)
Without connection to the system controller	Leave it to off. (Factory setting)
With connection to the system controller (Note 1)	ON

(Note.1) When only the LM adapter is connected, leave DIP SW2-1 to OFF as it is.
(Note.2) Set SW2-1 on all outdoor units in the same refrigerant circuit to the same setting.

④Selecting the sensor for indoor temperature detection (Factory setting: SW1-1 is set to OFF.)

To use the built-in sensor on the remote controller, set the DIP SW1-1 to ON.

※ Some models of remote controllers do not have a built-in temperature sensor.
Use the built-in temperature sensor on the indoor unit instead.

※ When using the built-in sensor on the remote controller, install the remote controller where the room temperature can be detected.

⑤Main/Sub setting on the MA remote controller "When the MA remote controller is used (Factory setting: Main)"

The MA remote controller has a Main/Sub setting. To connect two controllers to a system, one of them should be set to Sub.

⑥For the models which has more than one control board in an indoor unit, make SW1-1/SW3-8 settings of all control boards to be exactly the same.

4. An Example of a System to which an MA Remote Controller is connected

System using MA remote controller

(1) Sample control wiring

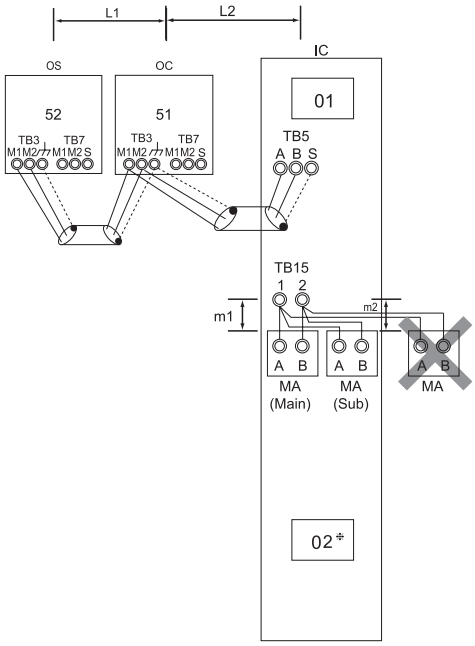

* P750,P900-F models only

(1) Cautions

1) Connecting the terminal block (TB5) of a different refrigerant indoor unit in a daisy-chain is prohibited.
2) Three or more MA remote controllers cannot be connected to indoor units in the same group. If there are three or more indoor units, ensure there are no more than two MA remote controllers.

(2) Maximum allowable length

1) Indoor/outdoor transmission line
   Maximum distance (1.25 mm^2 [AWG16] or larger)
   L1+L2≦200m[656ft]
2) Transmission line for centralized control
   No connection is required.
3) MA remote controller wiring
   Maximum overall cable length (0.3 to 1.25 mm^2) [AWG22 to 16])
   m1+m2≦200m [656ft]

(3) Wiring method and address setting

1) Indoor/outdoor transmission cable
   Connect terminals A and B of the terminal block (TB3) for the indoor-outdoor transmission cable of the outdoor unit (OC, OS) and terminals A and B of the terminal block (TB5) for the indoor-outdoor transmission cable of the indoor unit (IC). (Non-polarized two-wire)
   * Only use shielded cables.
   [Shielded cable connection]
   Use the earth of the shielded cable to connect the earth terminal of OC (⏚) and the S terminal of the IC terminal block (TB5) in a daisy-chain.
2) Transmission cable for centralized control
   No connection is required.
3) MA remote controller wiring
   * This cable is not needed when operation will not be performed with two remote controllers or a group.
   [In the case of operation with two remote controllers]
   In the case of two remote controllers, connect terminals 1 and 2 of the IC terminal block (TB15) and the terminal block of the MA remote controller. (Non-polarized two-wire)
   * Set the connected MA remote controller to the sub remote controller with the main/sub setting. (Refer to the operation manual for the setting method.)
   The MA remote controller is built into the indoor unit.
4) Switch Setting
   Refer to Chapter 3. (2)① "Address Setting". (page 61)

(2) Sample control wiring (Different refrigerant group operation)

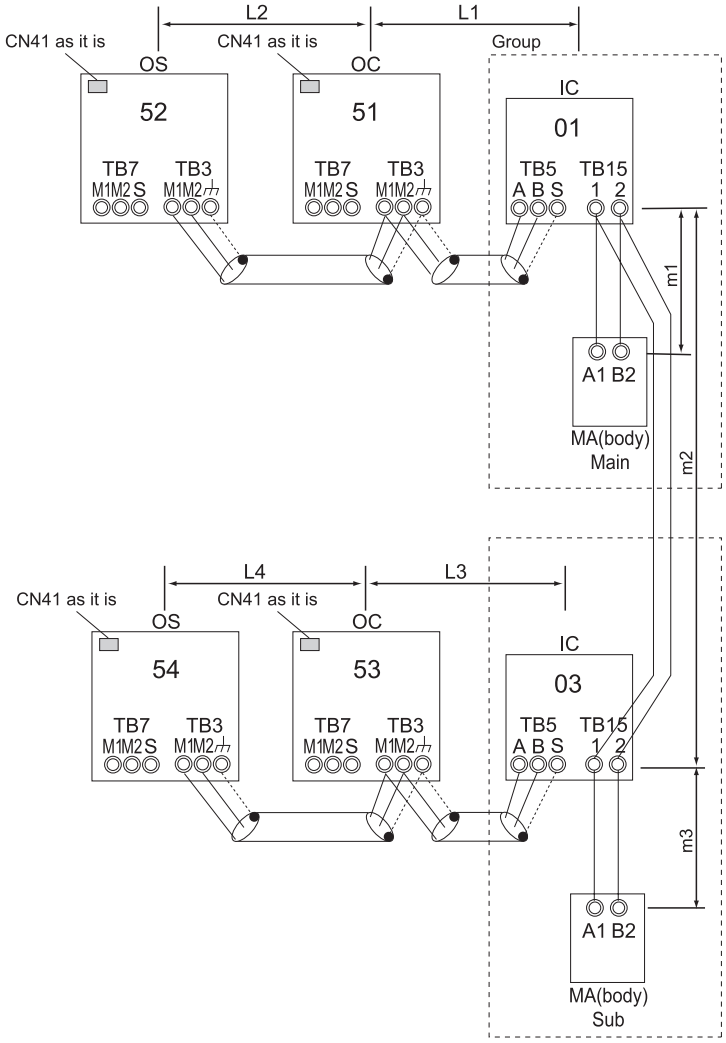

(1) Cautions

1) Do not connect together the terminal blocks (TB5) of indoor units connected to different outdoor units.
2) Three or more MA remote controllers cannot be set for indoor units in the same group. If there are three or more indoor units, ensure there are no more than two MA remote controllers. Disconnecting the relay connector for wiring the MA remote controller in the indoor unit allows for the indoor unit to be set to the same state as when the MA remote controller has been removed.

(2) Maximum allowable length

1) Indoor/outdoor transmission line
   Maximum distance (1.25mm^2 [AWG16] or larger)
   L1+L2, L3+L4≦200m [656ft]
2) Transmission line for centralized control
   Same as 4.(1).
3) MA remote controller wiring
   Maximum overall line length (0.3 to 1.25mm^2)
   [AWG22~16]
   m1+m2+m3≦200m [656ft]

(3) Wiring method and address setting

1) Indoor/outdoor transmission cable
   Connect terminals M1 and M2 of the terminal block (TB3) for the indoor-outdoor transmission cable of the outdoor unit (OC, OS) and terminals A and B of the terminal block (TB5) for the indoor-outdoor transmission cable of each indoor unit (IC). (Non-polarized two-wire)
   * Only use shielded cables.
   [Shielded cable connection]
   Same as 4.(1).
2) Transmission cable for centralized control
   Same as 4.(1).
3) MA remote controller wiring
   * In the case of different refrigerant group operation, be sure to set the MA remote controller of one of the indoor units as the sub remote controller.
   Same as 4.(1).
   [In the case of operation with two remote controllers]
   Same as 4.(1).
   [In the case of indoor group operation]
   In the case of group operation of indoor units, connect together the terminal 1 and 2 pairs of the terminal blocks (TB15) of both indoor units. (Non-polarize two-wire)
   * Set the main/sub selection setting of the remote controller of one of the indoor units to the sub remote controller.
   Set the indoor unit that has the most functions within the same group as the main unit.
4) Switch Setting
   Refer to Chapter 3. (2)① "Address Setting". (page 61)

(3) Sample control wiring (connect the system controller to the transmission cable for the centralized control)

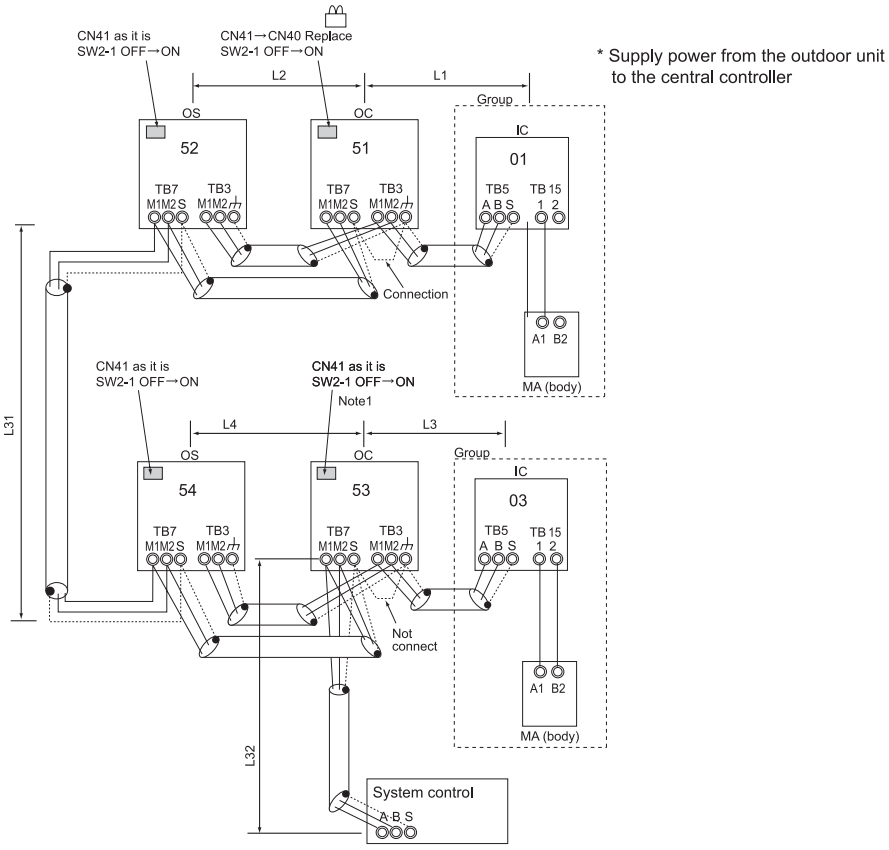

Note 1. When only the LM adapter is connected, leave SW2-1 to OFF (as it is).

(1) Cautions

1) Three or more MA remote controllers cannot be connected to indoor units in the same group.
2) Do not connect together the terminal blocks (TB5) of indoor units connected to different outdoor units.
3) Replace the CN41 power connector with the CN40 power connector for just one unit in the system.
4) Connect the shielded earth (S terminal) of the transmission terminal block (TB7) for the central controller to the earth of the outdoor unit for which the power supply connector was replaced.

(2) Maximum allowable length

1) Indoor/outdoor transmission line
   Same as 4.(2).
2) Transmission line for centralized control
   Maximum line distance via outdoor unit
   (1.25mm^2 [AWG16] or larger)
   L1+L2+L31+L3+L4≤500m [1640ft]
   L32+L3≤500m [1640ft]
   L32+L4+L31+L1+L2≤500m [1640ft]
   (* L2 + L31 + L4 + L32 ≤ 200m [656ft])
3) MA remote controller wiring
   Same as 4.(1).

(3) Wiring method

1) Indoor/outdoor transmission cable
   Same as 4.(2).
   [Shielded cable connection]
   Same as 4.(1).
2) Transmission cable for centralized control
   Connect terminals M1 and M2 of the transmission terminal block (TB7) for the central controller of each OC, OS and terminals A and B of the system controller in a daisy-chain. (Non-polarized two-wire)
   For just one OC, replace the CN41 power connector on the control board with the CN40 power connector. Set the centralized control switch (SW2-1) on the control boards of all OCs and OSs to ON.
   * Only use shielded cables.
   [Shielded cable connection]
   Use the earth of the shielded cable to connect the S terminal of the terminal block (TB7) of each OC and the S terminal of the system controller in a daisy-chain.
   Short the S terminal and earth terminal (⏚) of the terminal block (TB7) of the one OC for which CN40 was replaced.
3) MA remote controller wiring
   Same as 4.(1).
   [In the case of operation with two remote controllers]
   Same as 4.(1).
   [In the case of indoor group operation]
   Same as 4.(1).
4) Switch Setting
   Refer to Chapter 3. (2)① "Address Setting". (page 61)

5. System control

(1) System control for the indoor units

1. Various start/stop control (Indoor unit setting)

(1) The restart setting for the indoor unit can be set with the DIP SW (SW1-9, 10) on the unit.

Function	Operation recovery after power failure	Setting(SW1)(Note 4)	
		9	10
Power reset (Notes 1, 2, and 3)	Indoor unit will go into operation within approximately five minutes of power restoration regardless of its operation status before power off (or power failure).	OFF	ON
Automatic recovery after power failure(Note 3)	Indoor unit will go into operation within approximately five minutes of power restoration if it was in operation when the power was turned off (or power failure).	ON	OFF
	Indoor unit will remain stopped regardless of its operation status before power off (or power failure).	OFF	OFF

(Note 1) Do not turn off the power to the outdoor unit.
Turning off the power to the outdoor unit cuts of the power to the crankcase heater, and this may lead to compressor failure when the operation is resumed after power failure.
(Note 2) Power resetting cannot be performed on the models with both a drain pump and a humidifier. Power resetting this type of models will cause water leakage.
(Note 3) This setting can be used when SWC is turned off.
(Note 4) Dipswitches on all indoor units need to be set.

(2) Sequential starting of indoor unit fan and outdoor unit compressor is possible by setting the indoor unit address.

● Startup time of each unit when operation signals are sent via MELANS

MELANS group number (example)	01	02	···	16	17	···	50
Indoor unit (address)	01	02	···	16	17	···	50
Fan/compressor sequential startup time (Notes 1)	0 second	1 second	···	15 seconds	16 seconds	···	49 seconds

● Startup time of each unit when operation signals are sent via the MA remote controller

Indoor unit (address)	01	02	···	16	17	···	50
Fan/compressor sequential startup time (Notes 1 and 2)	0.5 seconds	1 second	...	8 seconds	0.5 seconds	...	1 second

(Note 1) Sequential startup time for the main unit is 0, regardless of the address that is assigned to it.
(Note 2) The maximum sequential startup time is 8 seconds when operation signals are sent via the MA remote controller.

(3) Emergency Operation Mode

1. Problems with the outdoor unit

- Emergency operation mode is a temporary operation mode in which the outdoor unit that is not in trouble operates when one of the outdoor units is in trouble.
- This mode can be started by performing an error reset via the remote controller.

(1) Starting the emergency operation

1) When an error occurs, the error source and the error code will be displayed on the display on the remote controller.
2) The error is reset using the remote controller.
3) If an error code appears that permits an emergency operation in step 1) above, (See the table below.), the retry operation starts.
4) If the same error is detected during the retry operation step 3) above , an emergency operation can be started by resetting the error via the remote controller.

Error codes that permit an emergency operation (Applicable to both OC and OS)

Trouble source		Error codes that permit an emergency operation	Error code description
Compressor Fan motor Inverter		0403	Serial communication error
		4220, 4225	Bus voltage drop
		4230	Heatsink overheat protection
		4240	Overload protection
		4250, 4255	Overcurrent relay trip
		5110	Heatsink temperature sensor failure (THHS)
		5301	Current sensor/circuit failure
Thermistor	TH2	5102	Subcool heat exchanger bypass outlet temperature sensor failure
	TH3	5103	Pipe temperature sensor failure
	TH4	5104	Discharge temperature sensor failure
	TH5	5105	Accumulator inlet temperature sensor failure
	TH6	5106	Subcool heat exchanger liquid outlet sensor failure
	TH7	5107	Outside air temperature sensor failure

* Capacity is reduced during emergency operation. (Capacity varies depending on the number of outdoor units that have failed.)

Emergency operation pattern (2 outdoor units)

		OC failure pattern	OS failure pattern
OC		Trouble	Normal
OS		Normal	Trouble
Emergency operation	Cooling	Permitted	Permitted
	Heating	Permitted	Permitted
Maximum total capacity of indoor units (Note 1)		100%	

(Note 1) If an attempt is made to put into operation a group of indoor units whose total capacity exceeds the maximum allowable capacity, some of the indoor units will go into the same condition as Thermo-OFF.

(2) Ending the emergency operation

1) End conditions

When one of the following conditions is met, emergency operation stops, and the unit makes an error stop.

- When the integrated operation time of compressor in cooling mode has reached four hours.
- When the integrated operation time of compressor in heating mode has reached two hours.
- When an error is detected that does not permit the unit to perform an emergency operation.

2) Control at or after the completion of emergency operation

- At or after the completion of emergency operation, the compressor stops, and the error code reappears on the remote controller.
- If another error reset is performed at the completion of an emergency mode, the unit repeats the procedures in section (1) above.
- To stop the emergency mode and perform a current-carrying operation after correcting the error, perform a power reset.

2. Communication circuit failure or when some of the outdoor units are turned off

This is a temporary operation mode in which the outdoor unit that is not in trouble operates when communication circuit failure occurs or when some of the outdoor units are turned off.

(1) Starting the emergency operation (When the OC is in trouble)

1) When an error occurs, the error source and the error code appear on the display on the remote controller.
2) Reset the error via the remote controller to start an emergency operation.

Precautions before servicing the unit

- When the OC is in trouble, the OS temporarily takes over the OC's function and performs an emergency operation. When this happens, the indoor unit connection information are changed.
- In a system that has a billing function, a message indicating that the billing system information has an error may appear on the TG-2000A. Even if this message appears, do not change (or set) the refrigerant system information on the TG-2000A. After the completion of an emergency operation, the correct connection information will be restored.

(2) Starting the emergency operation (When the OS is in trouble)

1) A communication error occurs. -> An emergency operation starts in approximately six minutes.

Error codes that permit an emergency operation (Applicable to both OC and OS)

Trouble source	Error codes that permit an emergency operation	Error code description
Circuit board failure or the power to the outdoor units is off	6607	No acknowledgement error
	6608	No response error

Emergency operation pattern (2 outdoor units)

		OC failure pattern	OS failure pattern
OC		Trouble	Normal
OS		Normal	Trouble
Emergency operation	Cooling	Permitted	Permitted
	Heating	Permitted	Permitted
Maximum total capacity of indoor units (Note 1)		Capacity that matches the total capacity of the operable outdoor units	

(Note 1) If an attempt is made to put into operation a group of indoor units whose total capacity exceeds the maximum allowable capacity, some of the indoor units will go into the same condition as Thermo-OFF.

(2) System control for the outdoor units

1. Various types of control using input-output signal connector on the outdoor unit (various connection options)

Type	Usage	Function	Terminal to be used*1	Option
Input	Prohibiting cooling/heating operation (thermo OFF) by an external input to the outdoor unit. *It can be used as the DEMAND control device for each system.	DEMAND (level)	CN3D*2	Adapter for external input (PAC-SC36NA-E)
	Performs a low level noise operation of the outdoor unit by an external input to the outdoor unit. * It can be used as the silent operation device for each refrigerant system.	Low-noise mode (level)*3*4		
	Forces the outdoor unit to perform a fan operation by receiving signals from the snow sensor.	Snow sensor signal input (level)	CN3S	
Output	How to extract signals from the outdoor unit *It can be used as an operation status display device. *It can be used for an interlock operation with external devices.	Operation status of the compressor	CN51	Adapter for external output (PAC-SC37SA-E)
		Error status*6		

*1. For detailed drawing, refer to "Example of wiring connection".

*2. For details, refer to 1) through 4) shown below.

*3. Low-noise mode is valid when Dip SW4-4 on the outdoor unit is set to OFF. When DIP SW4-4 is set to ON, 4 levels of on-DEMAND are possible, using different configurations of low-noise mode input and DEMAND input settings.When 2 outdoor units exist in one refrigerant circuit system, 8 levels of on-DEMAND are possible.

*4. By setting Dip SW5-5, the Low-noise mode can be switched between the Capacity priority mode and the Low-noise priority mode.
When SW5-5 is set to ON: The low-noise mode always remains effective.
When SW5-5 is set to OFF: The low-noise mode is cancelled when certain outside temperature or pressure criteria are met, and the unit goes into normal operation (capacity priority mode).

Low-noise mode is effective		Capacity priority mode becomes effective	
Cooling	Heating	Cooling	Heating
TH7<30°C[86°F] and 63HS1<32kg/cm^2	TH7>3°C[37°F] and 63LS>4.6kg/cm^2	TH7>35°C[95°F] and 63HS1>35kg/cm^2	TH7<0°C[32°F] and 63LS<3.9kg/cm^2

*5. When multiple outdoor units exist in one refrigerant circuit system, settings on every outdoor unit (signal input) are required.

*6. Take out signals from the outdoor unit that is designated as OC if multiple outdoor units exist in a single system.

⚠ CAUTION

1) Wiring should be covered by insulation tube with supplementary insulation.
2) Use relays or switches with IEC or equivalent standard.
3) The electric strength between accessible parts and control circuit should have 2750V or more.

Example of wiring connection

■ CN51

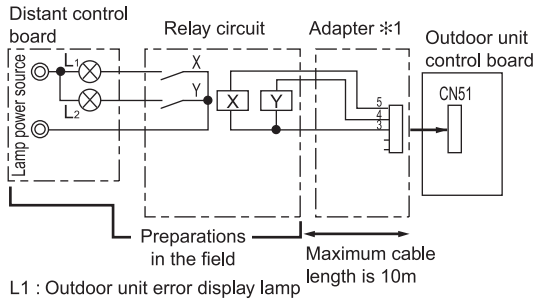

L1 : Outdoor unit error display lamp
L2 : Compressor operation lamp (compressor running state)
X, Y : Relay (coil =<0.9W : DC12V)
⁎1. Optional part : PAC-SC37SA-E or field supply.

■ CN3S

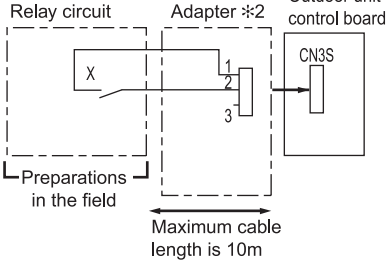

X : Relay Contact rating voltage >= DC15V
Contact rating current >= 0.1A
Minimum applicable load =< 1mA at DC

Snow sensor : The outdoor fan runs when X is closed in stop mode or thermostat mode.

⁎2. Optional part : PAC-SC36NA-E or field supply.

■ CN3D

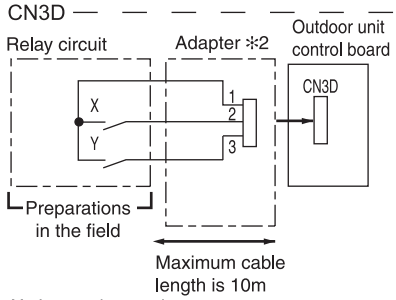

X : Low-noise mode
Y : Compressor ON/OFF
X,Y : Relay Contact rating voltage >= DC15V
Contact rating current >= 0.1A
Minimum appicable load =< 1mA at DC
⁎2. Optional part : PAC-SC36NA-E or field supply.

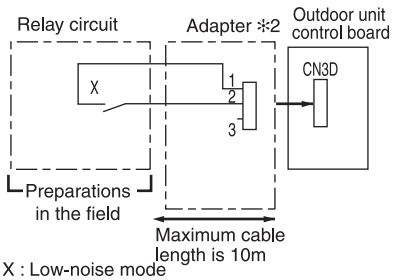

X : Low-noise mode
X : Relay Contact rating voltage >= DC15V
Contact rating current >= 0.1A
Minimum applicable load =< 1mA at DC
⁎2. Optional part : PAC-SC36NA-E or field supply.

Low-noise mode (Night mode) : The noise level is reduced by controlling the maximum fan frequency and maximum compressor frequency.

1) SW4-4: OFF (Compressor ON/OFF, Low-noise mode)

CN3D 1-3P	Compressor ON/OFF
Open	Compressor ON
Short-circuit	Compressor OFF

CN3D 1-2P	Low-noise mode*2
Open	OFF
Short-circuit	ON

*1. When SW4-4 on the outdoor unit in one refrigerant circuit system is set to ON , this function cannot be used.
*2. This function and the 4 levels or 8 levels on-DEMAND function can be used together. Input the order to CN3D 1-2P on the outdoor unit whose SW4-4 is set to OFF.

2) When SW4-4 on one outdoor unit in one refrigerant circuit system is set to ON (4 levels of on-DEMAND) (*3)

	CN3D 1-2P	
CN3D 1-3P	Open	Short-circuit
Open	100% (No DEMAND)	75%
Short-circuit	0% (Compressor OFF)	50%

*3. Input the order to CN3D on the outdoor unit whose SW4-4 is set to ON.

Note the following steps to be taken when using the STEP DEMAND
(Example) When switching from 100% to 50%

Demand control steps						
	(Wrong)	100%	→	~~0%~~	→	50%
	(Correct)	100%	→	75%	→	50%

If the step listed as the wrong example above is taken, thermo may go off.
The percentage of the demand listed in the table above is an approximate value based on the compressor volume and does not necessarily correspond with the capacity.

3) When SW4-4 on the two outdoor units in one refrigerant circuit system is set to ON (8 levels of on-DEMAND) (*4, *5)

8 levels of on-DEMAND		No.2 CN3D				
		1-2P	Open		Short-circuit	
No.1 CN3D	1-2P	1-3P	Open	Short-circuit	Open	Short-circuit
	Open	Open	100%	50%	88%	75%
		Short-circuit	50%	0%	38%	25%
	Short-circuit	Open	88%	38%	75%	63%
		Short-circuit	75%	25%	63%	50%

*4. Input the order to CN3D on the outdoor unit whose SW4-4 is set to ON.
*5. CN3D of No. 1, 2 can be selected arbitrary with the outdoor unit whose SW4-4 is set to ON.

6. Caution for refrigerant leakage

The installer and/or air conditioning system specialist shall secure safety against refrigerant leakage according to local regulations or standards. The following standard may be applicable if no local regulation or standard is available.

6-1. Refrigerant property

R410A refrigerant is harmless and incombustible. The R410A is heavier than the indoor air in density. Leakage of the refrigerant in a room has possibility to lead to a hypoxia situation. Therefore, the Critial concentration specified below shall not be exceeded even if the leakage happens.

- **Critical concentration**

  Critical concentration hereby is the refrigerant concentration in which no human body would be hurt if immediate measures can be taken when refrigerant leakage happens.

Critical concentration of R410A: 0.30kg/m^3
(The weight of refrigeration gas per 1 m^3 air conditioning space.);
* The Critical concentration is subject to ISO5149, EN378-1.

For the PFAV system, the concentration of refrigerant leaked should not have a chance to exceed the Critical concentration in any situntion.

6-2. Confirm the Critical concentration and take countermeasure

The maximum refrigerant leakage concentration (Rmax) is defined as the result of the possible maximum refrigerant weight (Wmax) leaked into a room divided by its room capacity (V). It is referable to Fig. 6-1. The refrigerant of Outdoor unit here includes its original charge and additional charge at the site.

The additional charge is calculated according to 3-3. "Refrigerant charging calculation", and shall not be over charged at the site. Procedure 6-2-1~3 tells how to confirm maximum refrigerant leakage concentration (Rmax) and how to take countermeasures against a possible leakage.

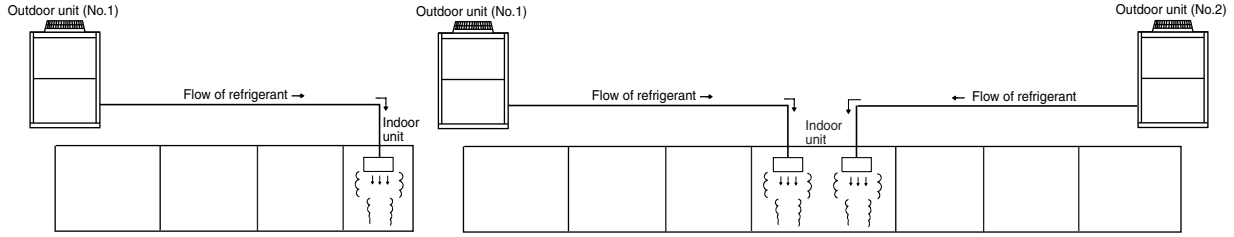

Maximum refrigerant leakage concentration (Rmax)
Rmax=Wmax / V (kg/m^3)

Maximum refrigerant leakage concentration (Rmax)
Rmax=Wmax / V (kg/m^3) W1: Refrigerant weight of Outdoor unit No.1
where, Wmax=W1+W2 W2: Refrigerant weight of Outdoor unit No.2

Fig. 6-1 The maximum refrigerant leakage concentration

6-2-1. Find the room capacity (V),
If a room having total opening area more than 0.15% of the floor area at a low position with another room/space, the two rooms/space are considered as one. The total space shall be added up.

6-2-2. Find the possible maximum leakage (Wmax) in the room. If a room has Indoor unit(s) from more than 1 Outdoor unit, add up the refrigerant of the Outdoor units.

6-2-3. Divide (Wmax) by (V) to get the maximum refrigerant leakage concentration (Rmax).

6-2-4. Find if there is any room in which the maximum refrigerant leakage concentration (Rmax) is over 0.30kg/m^3.
If no, then the PFAV is safe against refrigerant leakage.
If yes, following countermeasure is recommended to do at site.

Countermeasure 1: Let-out (making V bigger)
Design an opening of more than 0.15% of the floor area at a low position of the wall to let out the refrigerant whenever leaked.
e.g. make the upper and lower seams of door big enough.

Countermeasure 2: Smaller total charge (making Wmax smaller)
e.g. Avoid connecting more than 1 Outdoor unit to one room.
e.g. Using smaller model size but more Outdoor units.
e.g. Shorten the refrigerant piping as much as possible.

Countermeasure 3: Fresh air in from the ceiling (Ventilation)
As the density of the refrigerant is bigger than that of the air. Fresh air supply from the ceiling is better than air exhausting from the ceiling. Fresh air supply solution refers to Fig. 6-2~4.

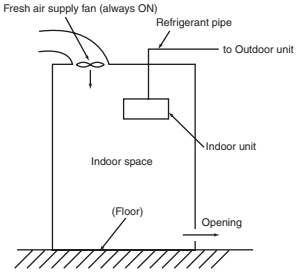

Fig.6-2. Fresh air supply always ON

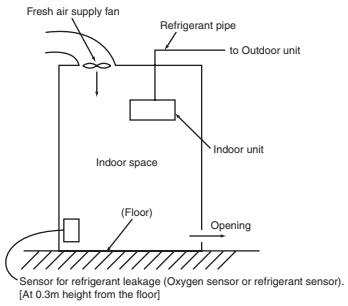

Fig.6-3. Fresh air supply upon sensor action

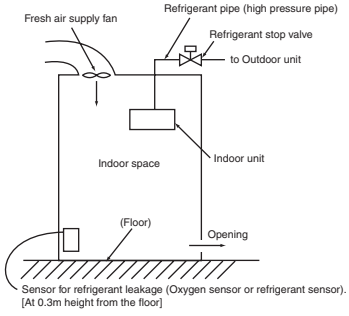

Fig.6-4. Fresh air supply and refrigerant shut-off upon sensor action

Note 1. Countermeasure 3 should be done in a proper way in which the fresh air supply shall be on whenever the leakage happens.
Note 2. In principle, MITSUBISHI ELECTRIC requires proper piping design, installation and air-tight testing after installation to avoid leakage happening.
In the area should earthquake happen, anti-vibration measures should be fully considered.
The piping should consider the extension due to the temperature variation.

DATA BOOK PUHY-P-Y(S)HM-A
PFAV-P-VM-E(-F)

MITSUBISHI ELECTRIC CORPORATION
HEAD OFFICE: TOKYO BLDG., 2-7-3, MARUNOUCHI, CHIYODA-KU, TOKYO 100-8310, JAPAN

Issued in Jul. 2009 MEE08K100
Printed in Japan

New publication effective Jul. 2009.
Specifications subject to change without notice.