Changes for the Better

MITSUBISHI ELECTRIC

AIR CONDITIONERS

Model PUHY-P250YHM-A
PFD-P250VM-E
PFD-P500VM-E

DATA BOOK

Close control

PUHY-P-YHM-A
PFD-P-VM-E

CONTENTS

1. Specifications

1-1.Main Features

(1) List of Models

PUHY-P250YHM-A Outdoor Unit

10HP(Down flow): PFD-P250VM-E
20HP(Down flow): PFD-P500VM-E } Indoor Unit

✻ PFD-type indoor units cannot be connected to outdoor units other than the ones specified above.
✻ PFD-type indoor units and other types of indoor units cannot coexist in the same refrigerant system.
✻ It is necessary to change pulley and V-belt when using it by the power supply frequency 60Hz.
✻ For restrictions when the PFD-type indoor units are connected (related to the system), see P20.

<10HP System>

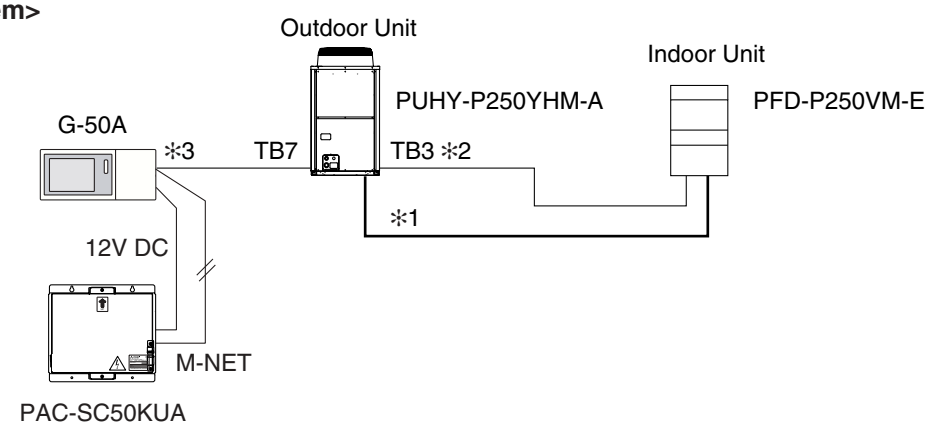

When using a PFD-P250VM-E as an indoor unit, connect an outdoor unit PUHY-P250YHM-A to each indoor unit and operate with a built-in remote control for the indoor unit.
✻1: Bold line indicates refrigerant piping (gas/liquid). This system consists of single refrigerant circuit.
✻2: Indicates TB3-type transmission line that connects the indoor and outdoor units.
This system consists of single refrigerant circuit.
✻3: Indicates TB7-Type transmission line that allows the unit to communicate with the controller.

<20HP System>

■ Two refrigerant circuits

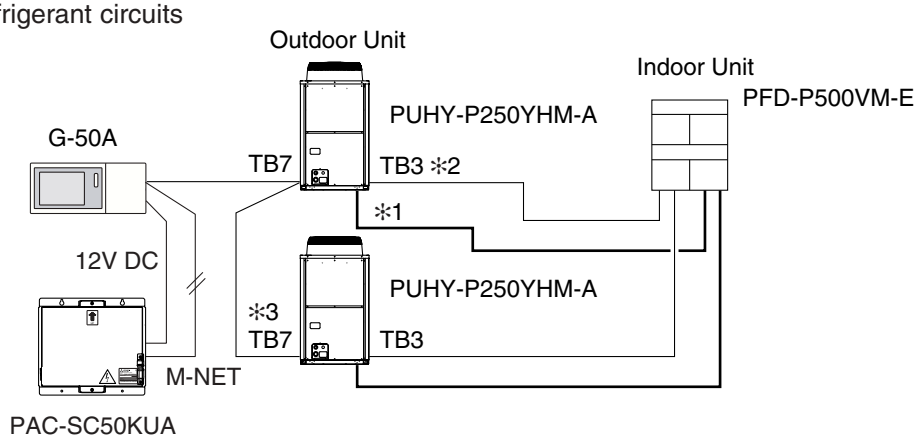

When using a PFD-P500VM-E as an indoor unit, connect 2 PUHY-P250YHM-A outdoor units to each indoor unit and operate with a built-in remote control for the indoor unit.
At factory shipment, this model of indoor unit is designed and set to accommodate a single refrigerant circuit.
Connection of two refrigerant circuits to the indoor unit requires setting change and pipe work.
✻1: Bold line indicates refrigerant piping (gas/liquid). This system consists of two refrigerant circuits.
✻2: Indicates TB3-type transmission line that connects the indoor and outdoor units.
This system consists of two refrigerant circuits.
✻3: Indicates TB7-type transmission line that allows the unit to communicate with the controller.

1-2. List of Possible Combinations of Indoor and Outdoor Units

		10HP system		20HP system	
Model Name	Indoor unit	PFD-P250VM-E		PFD-P500VM-E	
	Outdoor unit	PUHY-P250YHM-A		PUHY-P250YHM-A x 2	
		Cooling	Heating	Cooling	Heating
System capacity	kW	28.0	31.5	56.0	63.0
System Power input	kW	9.3	9.1	18.6	18.2
System current	A	16.7/15.9/15.4	16.4/15.5/15.1	32.3/30.8/29.7	31.7/30.0/29.1

*1: Refer to the following pages for detailed specifications of each unit.
*2: They were measured at operation under the following conditions:
<Cooling> Indoor:27˚CDB/19˚CWB Outdoor:35˚CDB
<Heating> Indoor:20˚CDB Outdoor: 7˚CDB/6˚CWB
Pipe length:7.5m, Height difference:0m

1-3. Unit Specifications

(1) Outdoor Unit

Model name			PUHY-P250YHM-A (-BS) connected with PFD series	
			Cooling	Heating
Capacity ✻1		kW	28.0	31.5
Power source			3N ~ 380/400/415V 50/60Hz	
Power input		kW	6.8	6.6
Current		A	11.4/10.9/10.5	11.1/10.5/10.2
Fan	Type × Quantity		Propeller fan x 1	
	Airflow rate	m^3/min	185	
	Motor output	kW	0.46	
Compressor	Type		Hermetic	
	Motor output	kW	6.7	
	Crankcase heater	kW	0.035 x 1	
Heat exchanger			Salt resistant fin	
Refrigerant / Lubricant			R410A/MEL32	
External finish			Pre-coated galvanized steel sheets (+ powder coating for -BS type) <MUNSEL 5Y 8/1 or similar>	
External dimension H x W x D		mm	1,710 (without legs 1,650) x 920 x 760	
Protection devices	High pressure protection		High pres. Sensor & High pres. Switch at 4.15MPa	
	Compressor		Over heat protection	
	Fan		Thermal switch	
	Inverter circuit (COMP./FAN)		Over-heat protection, Over current protection	
Refrigerant piping diameter	High press. pipe		ø9.52 Brazed (ø12.7 for over 90m)	
	Low press. pipe		ø22.2 Brazed	
Noise level ✻2		dB(A)	57	
Net weight		kg	200	

Note: *1. Cooling/Heating capacity indicates the maximum value at operation under the following condition.
<Cooling> Indoor : 27˚CDB / 19˚CWB Outdoor : 35˚CDB
<Heating> Indoor : 20˚CDB Outdoor : 7˚CDB / 6˚CWB
Pipe length : 7.5m Height difference : 0m
*2. It is measured in anechoic room.
** Installation/foundation work, electrical connection work, duct work, insulation work, power source switch, and other items shall be referred to the Installation Manual.

(2) Indoor Unit

Model name			PFD-P250VM-E		PFD-P500VM-E	
			Cooling	Heating ✻1	Cooling	Heating ✻1
System capacity		kW	28.0	31.5	56.0	63.0
Power source			3N~380/400/415V(50Hz), 400/415V(60Hz)			
Power input		kW	2.5		5.0	
Current		A	5.3/5.0/4.9		9.5/9.0/8.7	
Fan	Type x Quantity		Sirocco fan x 1		Sirocco fan x 2	
	Airflow rate	m^3/min	160		320	
	External static pressure	Pa	120		120	
	Motor Output	kW	2.2		4.4	
Refrigerant			R410A			
External finish			Galvanized steel plate (with polyester coating) <MUNSEL 2.9GY 8.6/0.3(White) 7.2GB 3.2/5.3(Blue) or similar>			
External dimensions H x W x D		mm	1,950 x 1,380 x 780		1,950 x 1,980 x 780	
Protection devices (Fan)			Thermal switch			
Refrigerant piping diameter ✻2	Single refrigerant circuit		Liquid pipe	ø 9.52 Brazed (ø 12.7 for over 90m)	Liquid pipe	ø 15.88 Brazed
			Gas pipe	ø 22.2 Brazed	Gas pipe	ø 28.58 Brazed
	Two refrigerant circuit		-		Liquid pipe	ø 9.52 Brazed (ø 12.7 for over 90m)
					Gas pipe	ø 22.2 Brazed
Refrigerant piping allowable length		m	150		150	
Noise level		dB(A)	59		63	
Heat exchanger			Cross fin (Aluminum plate fin and copper tube)			
Air filter			PP Honeycomb fabric (washable)			
Net weight		kg	380		520	

Note: *1. Heating can be used only by the indoor warming-up.
*2. At factory shipment, this model of indoor unit is designed and set to accommodate a single refrigerant circuit. Connection of two refrigerant circuits to the indoor unit requires setting change and pipe work.
** Installation/foundation work, electric connection work, duct work, insulation work, power source switch and other items are not specified in the specifications.

2. Capacity Curves

2-1. Cooling Capacity

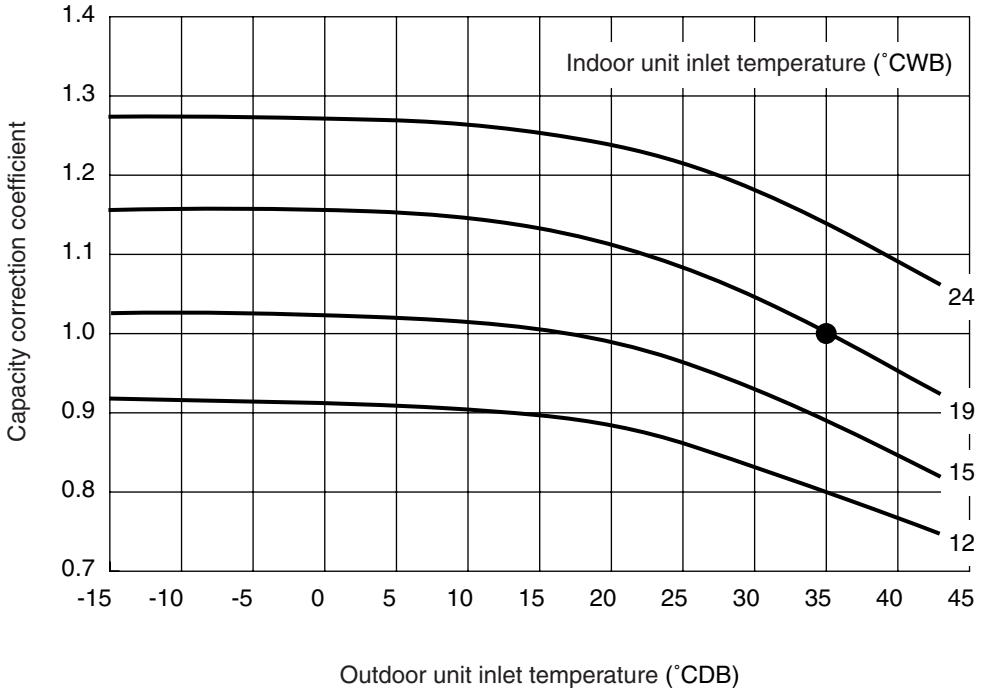

2-2. Cooling Input

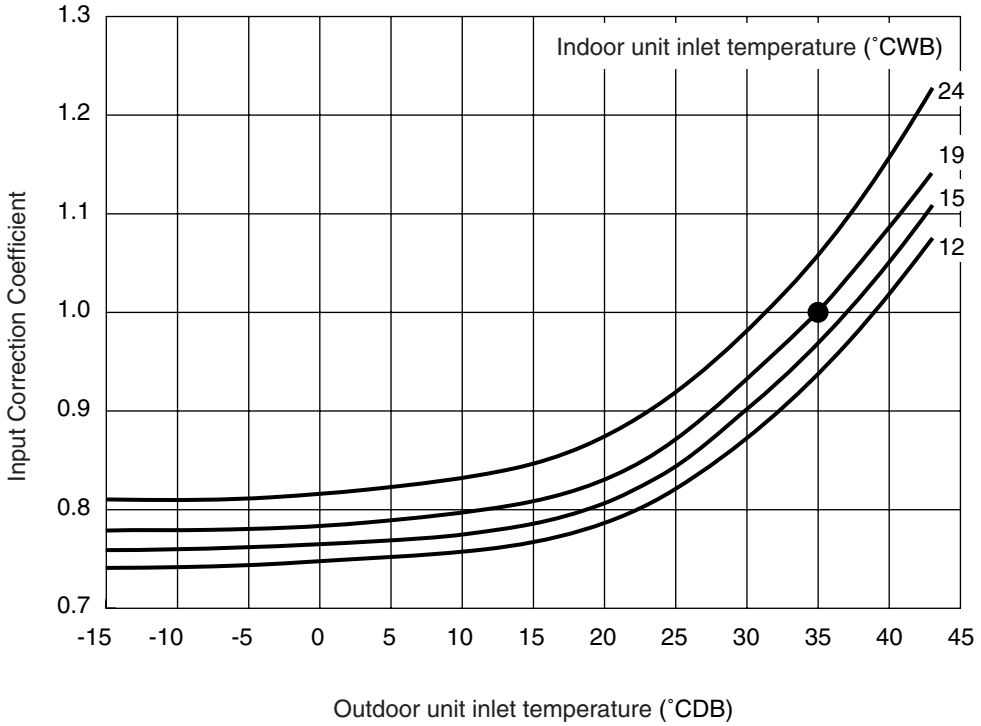

⁎ The correction curves indicate the values measured at the point where the compressor was operated at its maximum capacity.

⁎ ● indicates the standard value.

2-3. Part Load Performance

● 10HP System
Indoor Unit : PFD-P250VM-E
Outdoor Unit : PUHY-P250YHM-A

		System Power input (kW)						
Outdoor unit inlet temp. (˚CDB)	Cooling Capacity (kW)	100% Capacity	90% Capacity	80% Capacity	70% Capacity	60% Capacity	50% Capacity	40% Capacity
40 ˚C	26.6	10.05	8.75	7.68	6.79	6.08	5.50	5.04
35 ˚C	28.0	9.30	8.11	7.18	6.41	5.82	5.13	4.60
30 ˚C	29.4	8.65	7.61	6.81	6.17	5.50	4.94	4.52
25 ˚C	30.2	8.10	7.21	6.56	6.00	5.38	4.89	4.50
20 ˚C	31.1	7.72	6.92	6.26	5.74	5.27	4.85	4.47
15 ˚C	31.6	7.54	6.87	6.31	5.80	5.35	4.94	4.56

* Indoor air temperature condition: 27˚CDB/19˚CWB

● 20HP System
Indoor Unit : PFD-P500VM-E
Outdoor Unit : PUHY-P250YHM-A × 2

		System Power input (kW)							
Outdoor unit inlet temp. (˚CDB)	Cooling Capacity (kW)	100% Capacity	90% Capacity	80% Capacity	70% Capacity	60% Capacity	50% Capacity	40% Capacity	30% Capacity
40 ˚C	53.2	20.09	17.46	15.24	13.49	12.08	10.94	10.07	8.37
35 ˚C	56.0	18.60	16.19	14.30	12.77	11.51	10.11	9.05	8.06
30 ˚C	58.8	17.30	15.24	13.58	12.24	10.79	9.76	8.92	7.68
25 ˚C	60.5	16.19	14.47	13.06	11.79	10.59	9.67	8.79	7.55
20 ˚C	62.2	15.44	13.88	12.53	11.42	10.48	9.64	8.52	7.49
15 ˚C	63.3	15.07	13.83	12.63	11.58	10.67	9.84	8.62	7.64

* Indoor air temperature condition: 27˚CDB/19˚CWB

2-4. SHF Curves

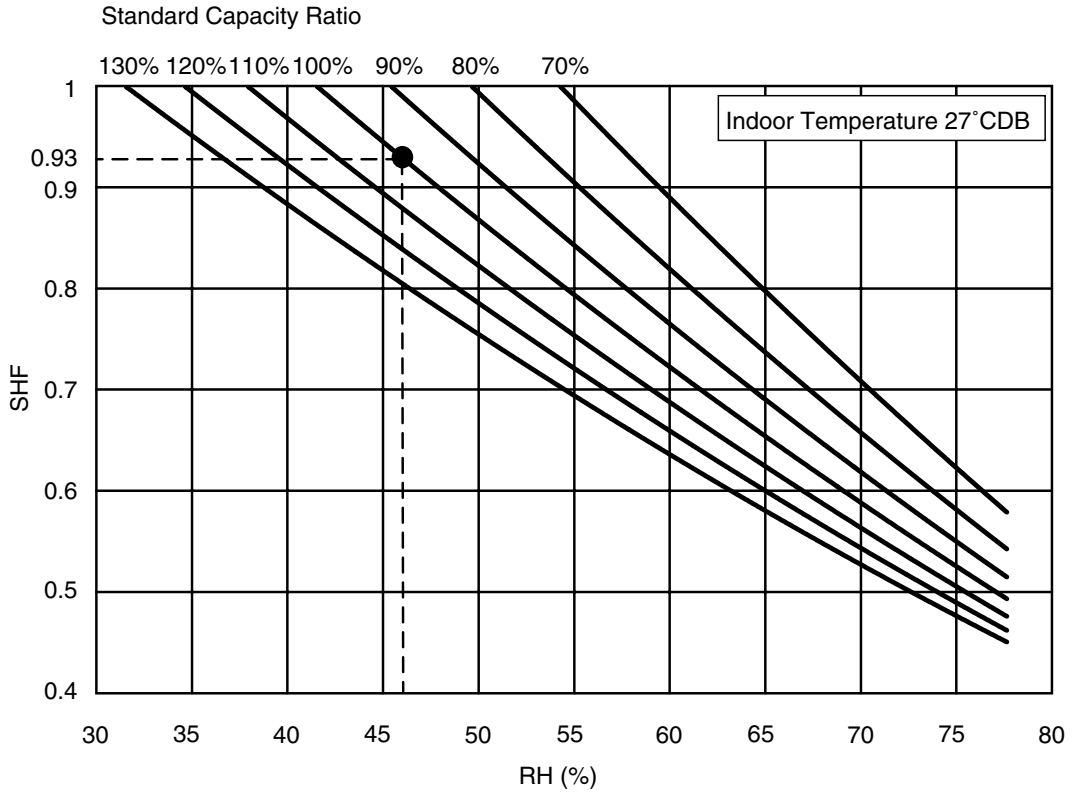

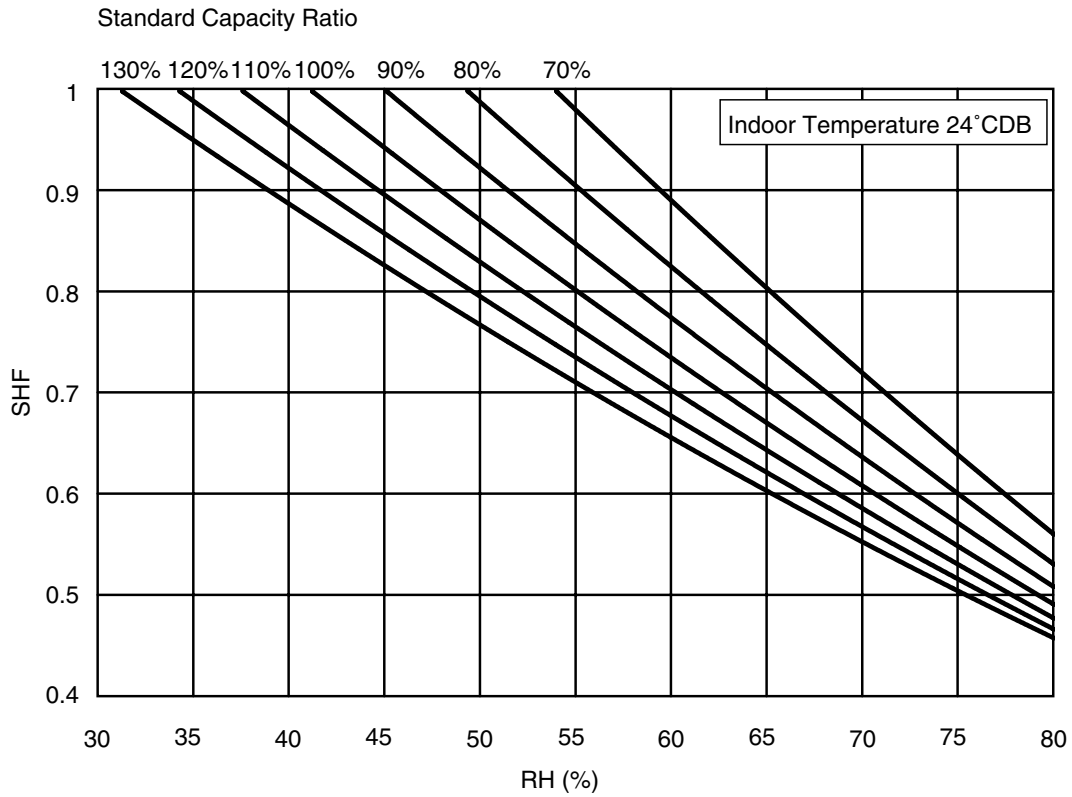

Operation Temparature Range: Indoor : 12˚CWB~24˚CWB
Outdoor: -15˚CDB~43˚CDB
(RH : 30~80%)
Standard Point "●" : Indoor : 27˚CDB/19˚CWB
Outdoor: 35˚CDB/-

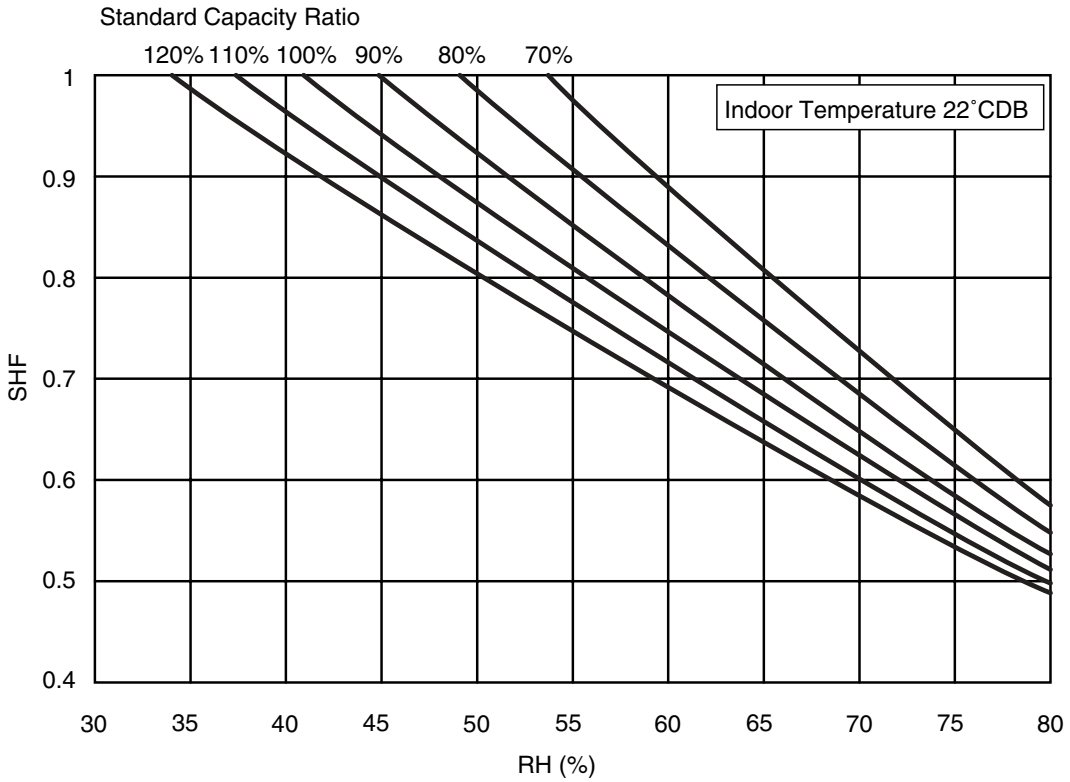

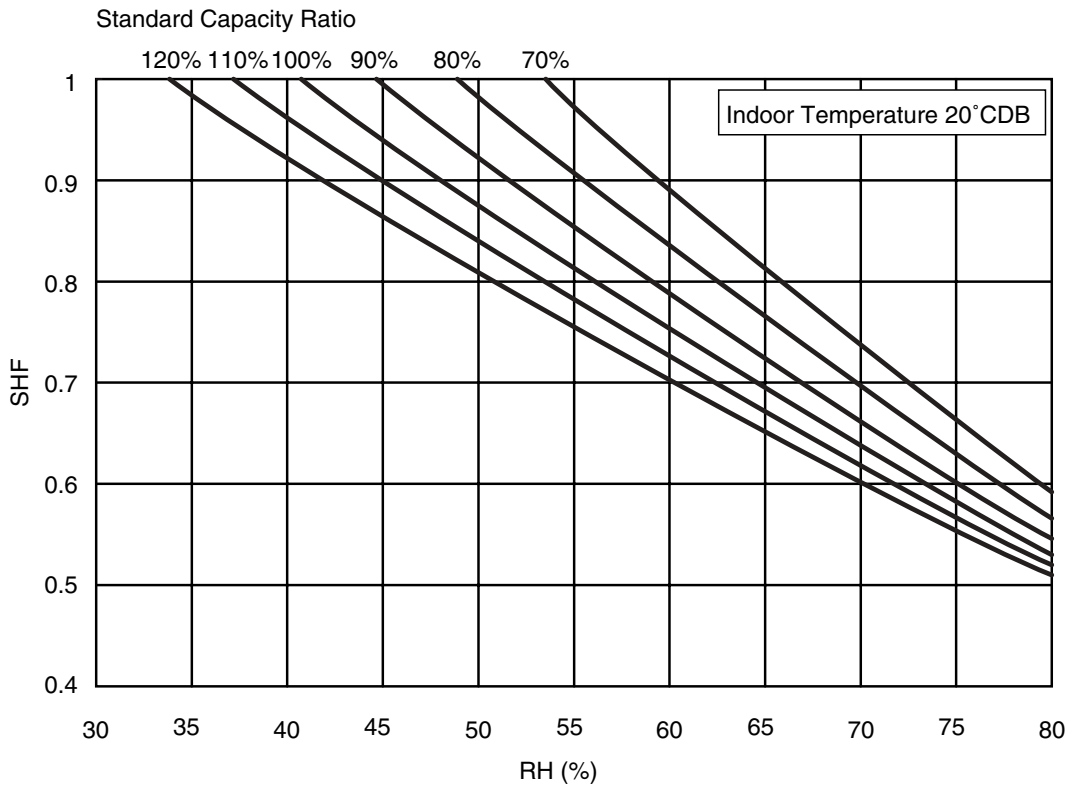

Operation Temparature Range: Indoor: 12˚CWB~24˚CWB
Outdoor: -15˚CDB~43˚CDB
(RH: 30~80%)

2-5. Correction by refrigerant piping length

To obtain a decrease in cooling/heating capacity due to refrigerant piping extension, multiply by the capacity correction factor based on the refrigerant piping equivalent length in the table below.

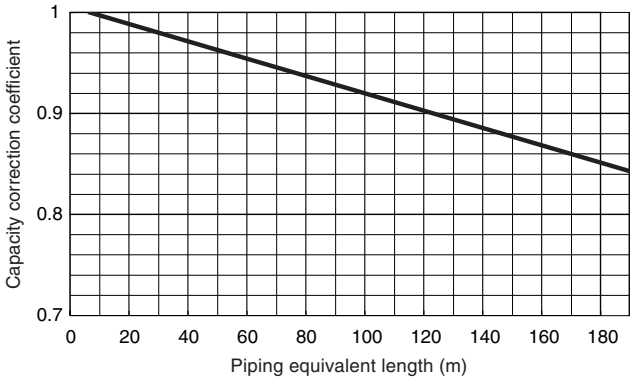

- **How to obtain piping equivalent length**

  Equivalent length = (Actual piping length to the farthest indoor unit) + (0.50 × number of bent on the piping)m

2-6. Operation limit

- Cooling

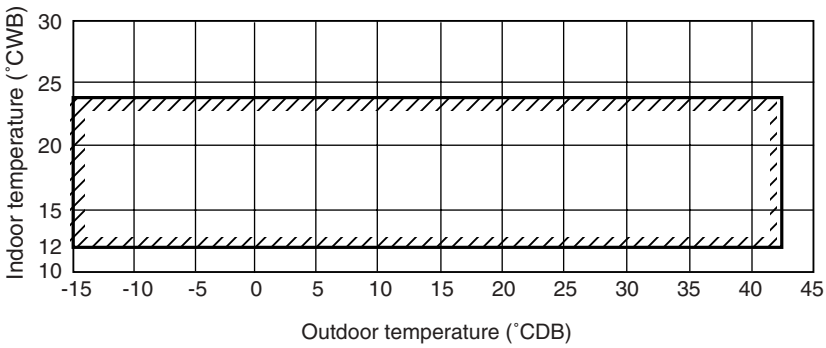

* The height between the Outdoor PUHY-P-YHM-A and Indoor could make the running temperature range narrow. For details refer to P19, 7-1 Refrigerant Piping System.

- Heating

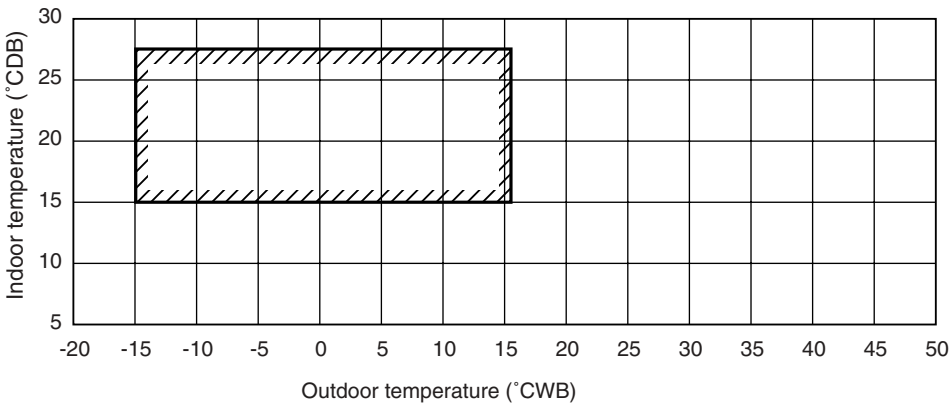

3. Sound Levels

3-1. Noise Level

(1) Outdoor Unit

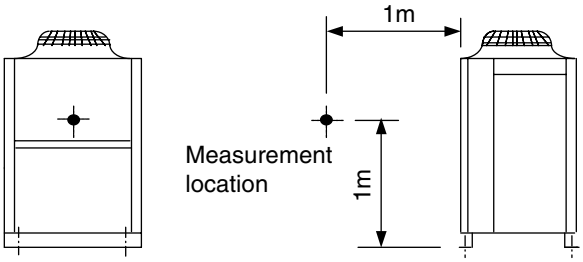

Series	Noise Level (dB [Type A])
PUHY-P250YHM-A	57

(2) Indoor Unit

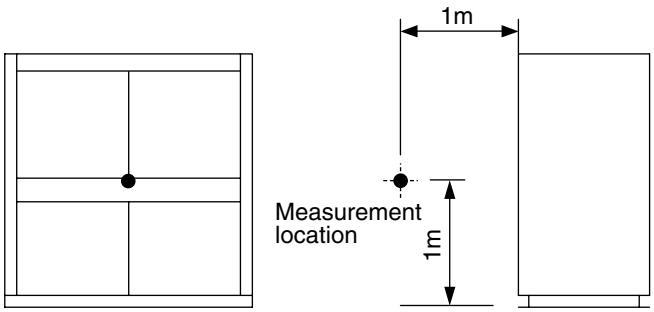

Series	Noise Level (dB [Type A])
PFD-P250VM-E	59
PFD-P500VM-E	63

3-2. NC Curves

PUHY-P250YHM-A (External static pressure 0Pa)

		63Hz	125Hz	250Hz	500Hz	1000Hz	2000Hz	4000Hz	8000Hz	dB(A)
Standard	50/60Hz	59.0	62.0	60.0	54.0	50.5	46.0	41.0	35.0	57.0
NightMode	50/60Hz	58.0	53.5	44.0	39.0	36.5	32.5	31.0	24.5	44.0

When Night Mode is set,the A/C system's capacity is limited. The system could return to normal operation from Night Mode automaticall in the case that the operation condition is severe.

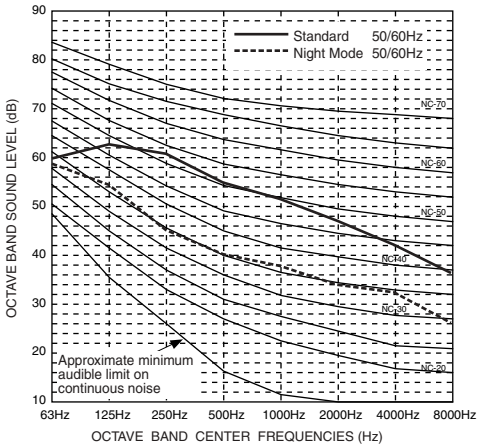

PFD-P250VM-E (External static pressure 120Pa)

63Hz	125Hz	250Hz	500Hz	1000Hz	2000Hz	4000Hz	8000Hz	dB(A)
70.6	62.7	60.5	56.1	54.8	45.7	39.7	32.9	59

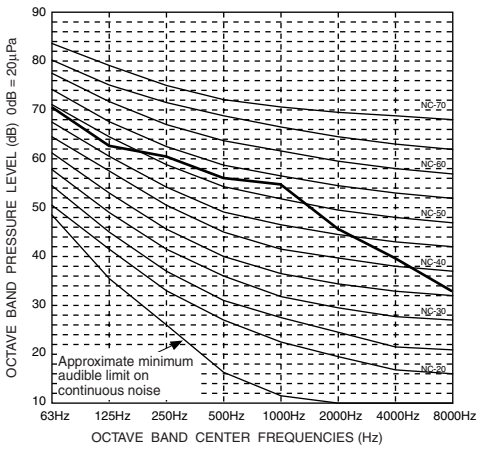

PFD-P500VM-E (External static pressure 120Pa)

63Hz	125Hz	250Hz	500Hz	1000Hz	2000Hz	4000Hz	8000Hz	dB(A)
82.8	70.5	65.6	57,0	55.1	51.1	44.7	37.9	63

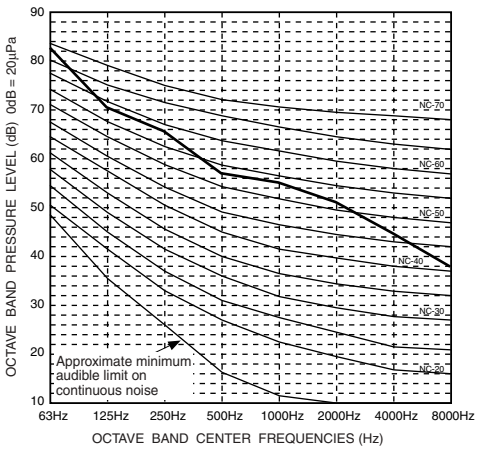

3-3. Fan Characteristics Curves

PFD-P250VM-E

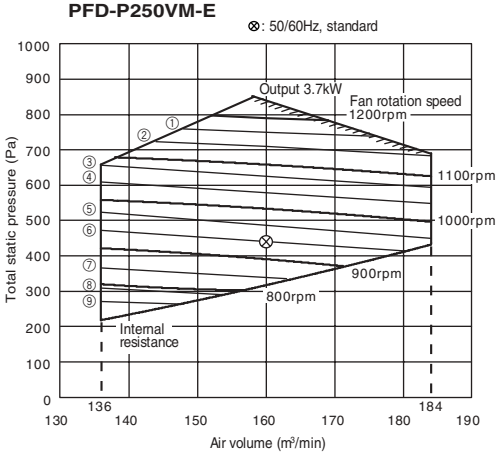

		50Hz			60Hz		
No.	Rotational speed (rpm)	Motor pulley	Fan pulley	V-belte	Motor pulley	Fan pulley	V-belte
①	1170	ø160-B-2-28	ø200-B-2-42	B48	ø165-B-2-28	ø250-B-2-42	B52
②	1140	ø165-B-2-28	ø212-B-2-42	B49	ø180-B-2-28	ø280-B-2-42	B56
③	1080	ø165-B-2-28	ø224-B-2-42	B50	ø170-B-2-28	ø280-B-2-42	B54
④	1040	ø165-B-2-28	ø236-B-2-42	B51	ø165-B-2-28	ø280-B-2-42	B54
⑤	973	ø165-B-2-28	ø250-B-2-42	B52	ø165-B-2-28	ø300-B-2-42	B55
⑥	930	ø170-B-2-28	ø280-B-2-42	B54	ø160-B-2-28	ø315-B-2-42	B56
⑦	845	ø160-B-2-28	ø280-B-2-42	B54	ø170-B-2-28	ø355-B-2-42	B60
⑧	797	ø170-B-2-28	ø315-B-2-42	B57	ø160-B-2-28	ø355-B-2-42	B59
⑨	748	ø160-B-2-28	ø315-B-2-42	B56	-	-	-

⁜ Pulley and V-belt is procured on site.

PFD-P500VM-E

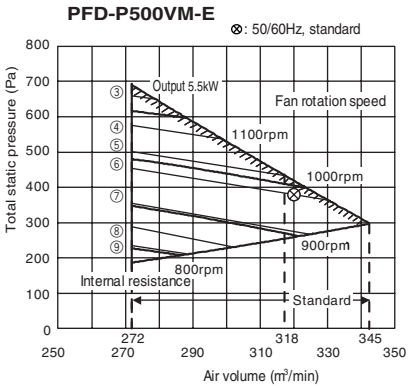

		50Hz			60Hz		
No.	Rotational speed (rpm)	Motor pulley	Fan pulley	V-belte	Motor pulley	Fan pulley	V-belte
③	1135	ø180-B-2-38	ø236-B-2-42	B51	ø160-B-2-38	ø250-B-2-42	B50
④	1070	ø180-B-2-38	ø250-B-2-42	B51	ø180-B-2-38	ø300-B-2-42	B55
⑤	1015	ø170-B-2-38	ø250-B-2-42	B51	ø160-B-2-38	ø280-B-2-42	B52
⑥	978	ø160-B-2-38	ø250-B-2-42	B50	ø160-B-2-38	ø300-B-2-42	B54
⑦	905	ø170-B-2-38	ø280-B-2-42	B53	ø160-B-2-38	ø315-B-2-42	B55
⑧	850	ø180-B-2-38	ø315-B-2-42	B56	ø170-B-2-38	ø355-B-2-42	B58
⑨	803	ø170-B-2-38	ø315-B-2-42	B55	ø160-B-2-38	ø355-B-2-42	B58

⁜ Pulley and V-belt is procured on site.

4. External Dimensions

PUHY-P250YHM-A(-BS)

Unit : mm

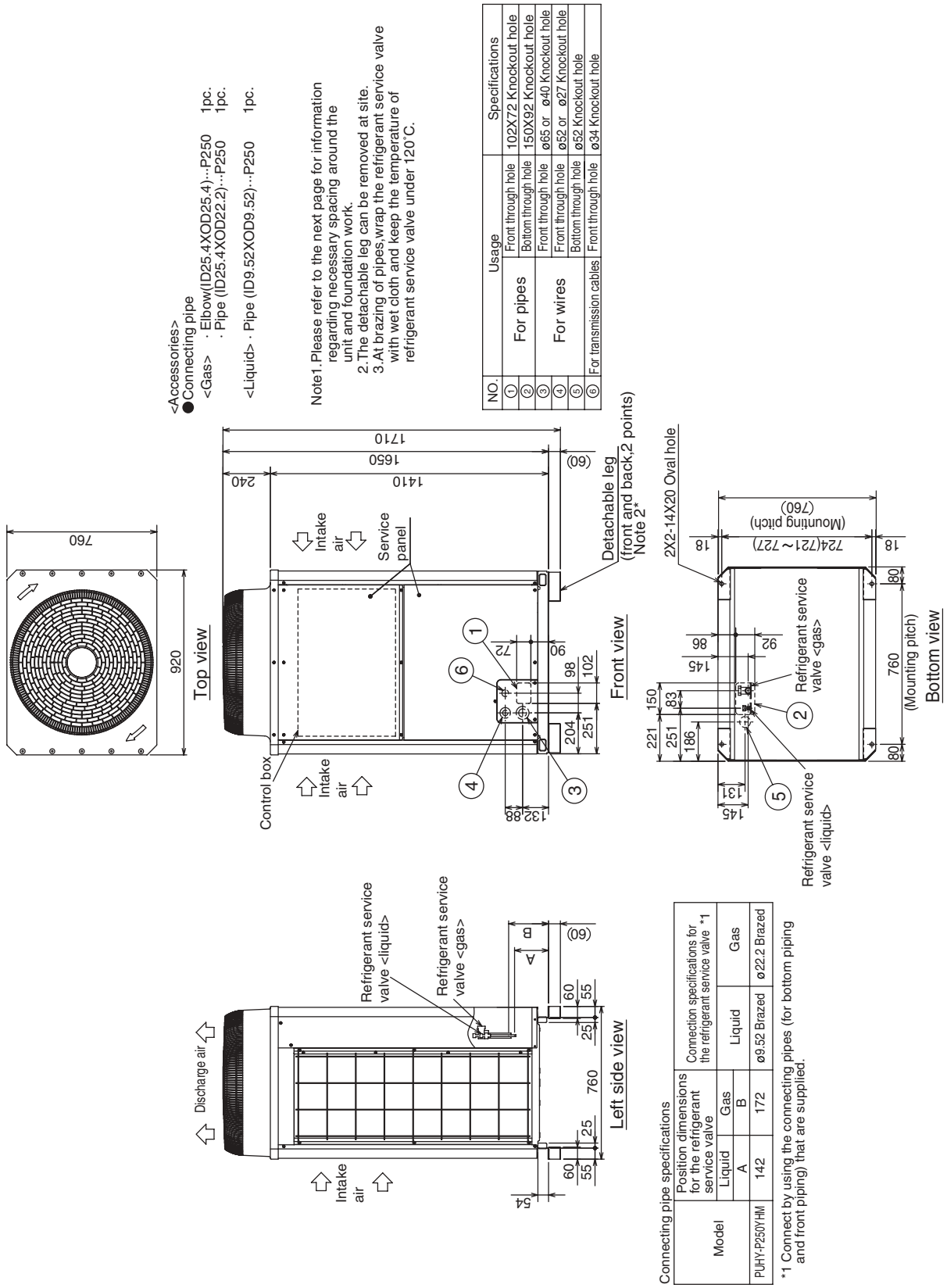

<Accessories>
●Connecting pipe
<Gas> · Elbow(ID25.4XOD25.4)···P250 1pc.
· Pipe (ID25.4XOD22.2)···P250 1pc.
<Liquid> · Pipe (ID9.52XOD9.52)···P250 1pc.

Note1.Please refer to the next page for information regarding necessary spacing around the unit and foundation work.
2.The detachable leg can be removed at site.
3.At brazing of pipes,wrap the refrigerant service valve with wet cloth and keep the temperature of refrigerant service valve under 120˚C.

NO.	Usage		Specifications
①	For pipes	Front through hole	102X72 Knockout hole
②		Bottom through hole	150X92 Knockout hole
③	For wires	Front through hole	ø65 or ø40 Knockout hole
④		Front through hole	ø52 or ø27 Knockout hole
⑤		Bottom through hole	ø52 Knockout hole
⑥	For transmission cables	Front through hole	ø34 Knockout hole

PFD-P250VM-E

Unit : mm

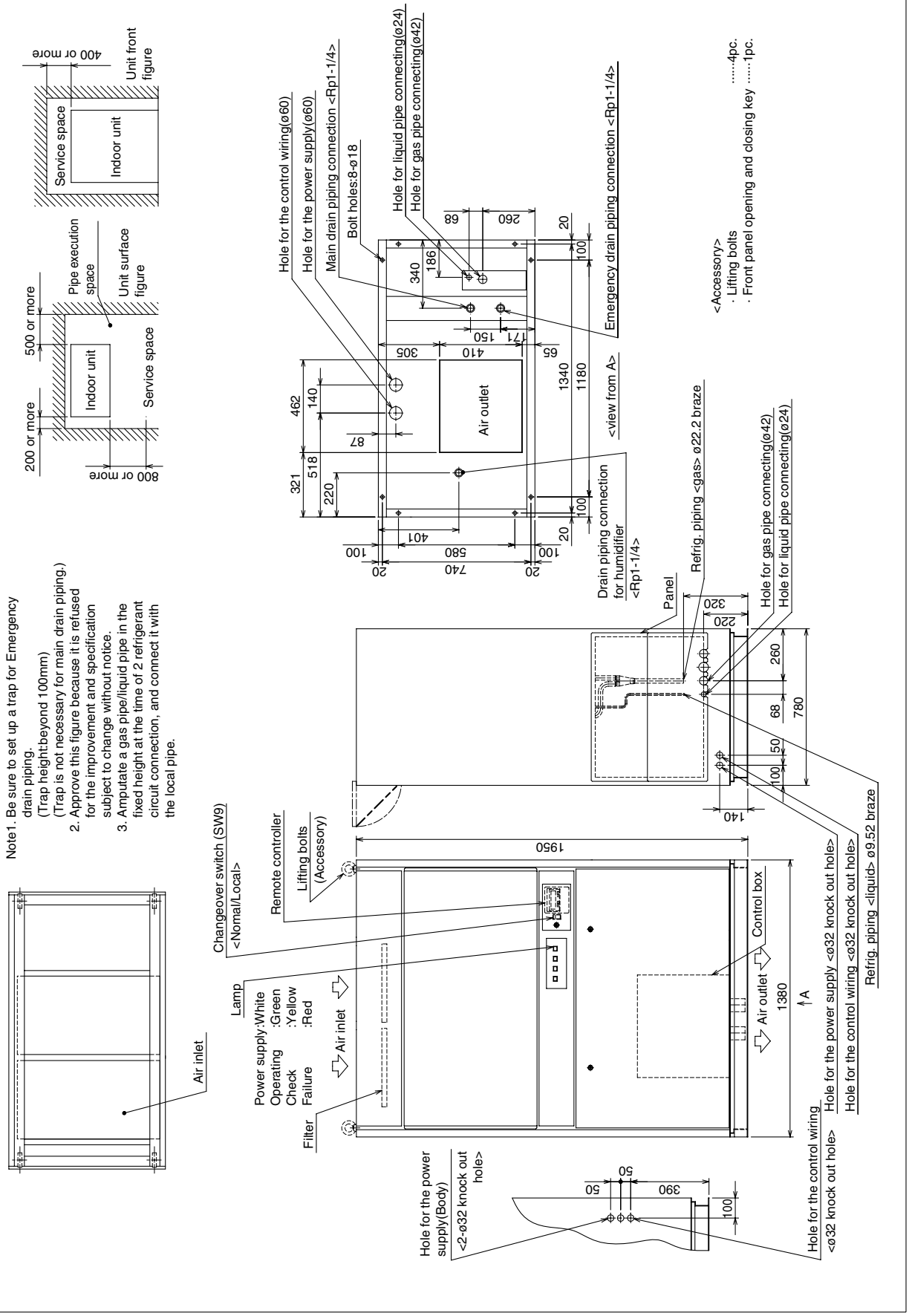

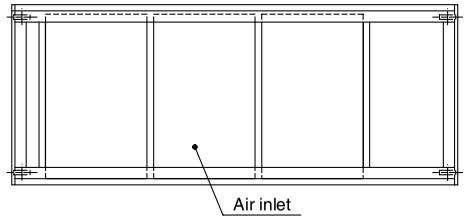

Note 1. Be sure to set up a trap for Emergency drain piping.
(Trap height:beyond 100mm)
(Trap is not necessary for main drain piping.)
2. Approve this figure because it is refused for the improvement and specification subject to change without notice.
3. Amputate a gas pipe/liquid pipe in the fixed height at the time of 2 refrigerant circuit connection, and connect it with the local pipe.

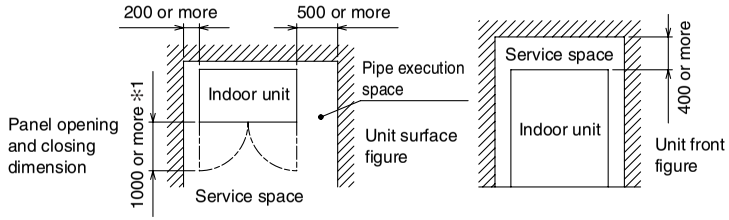

※1. It is necessary for the removal of the panel beyond 600mm.

<Accessory>
· Lifting bolts ·····4pc.
· Front panel opening and closing key ·····1pc.

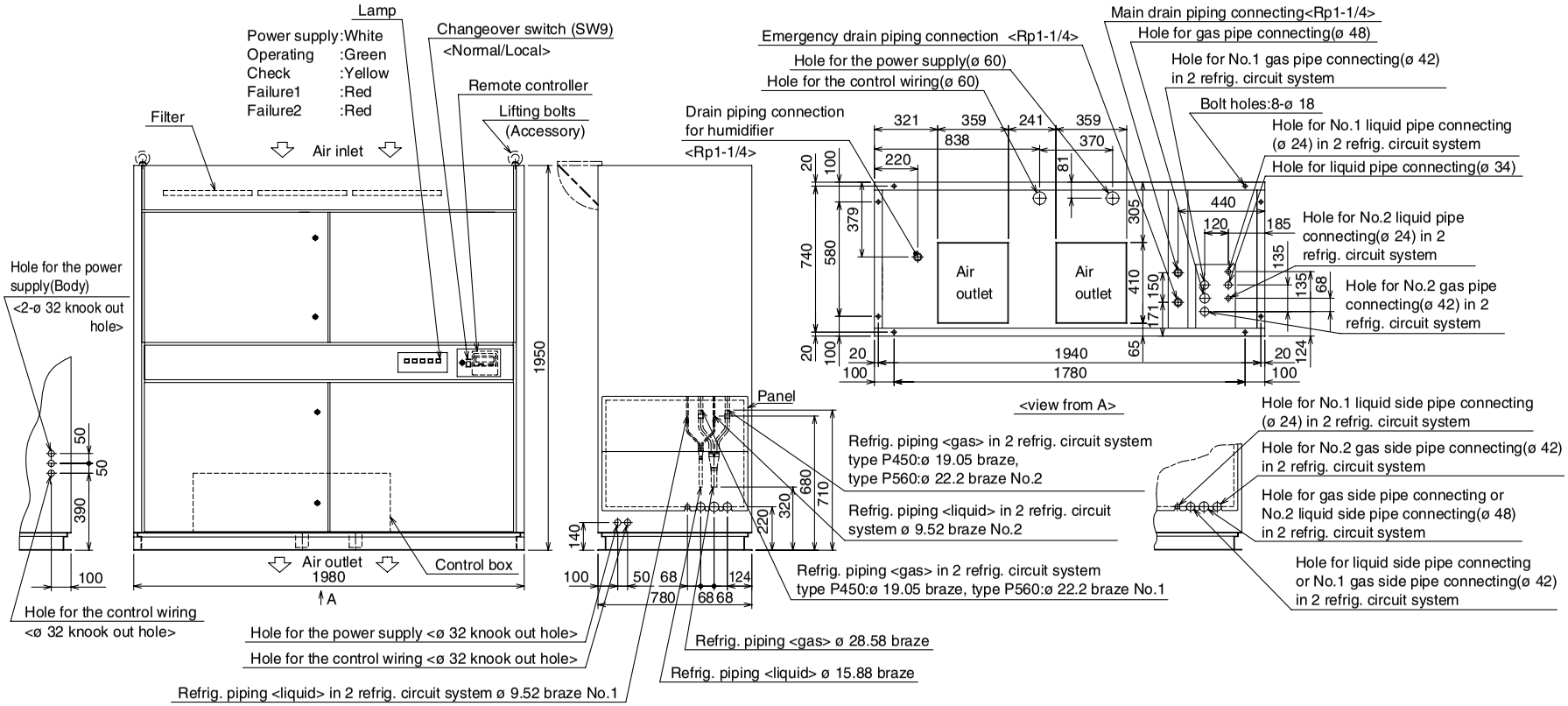

Unit : mm

5. Electrical Wiring Diagrams

PUHY-P250YHM-A

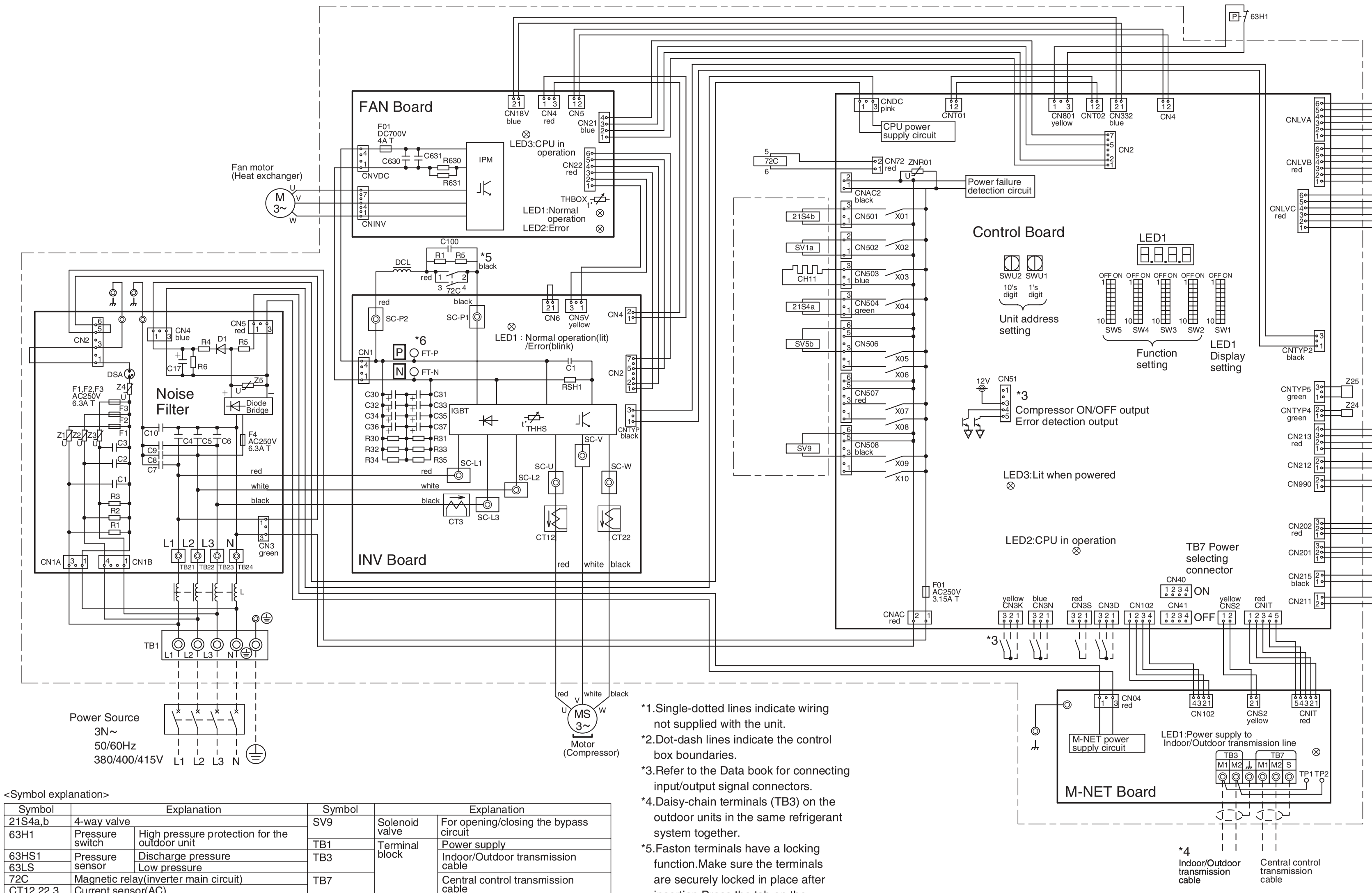

*1.Single-dotted lines indicate wiring not supplied with the unit.

*2.Dot-dash lines indicate the control box boundaries.

*3.Refer to the Data book for connecting input/output signal connectors.

*4.Daisy-chain terminals (TB3) on the outdoor units in the same refrigerant system together.

*5.Faston terminals have a locking function.Make sure the terminals are securely locked in place after insertion.Press the tab on the terminals to removed them.

*6.Control box houses high-voltage parts. Before inspecting the inside of the control box,turn off the power,keep the unit off for at least 10 minutes, and confirm that the voltage between FT-P and FT-N on INV Board has dropped to DC20V or less.

<Symbol explanation>

Symbol	Explanation	
21S4a,b	4-way valve	
63H1	Pressure switch	High pressure protection for the outdoor unit
63HS1	Pressure sensor	Discharge pressure
63LS		Low pressure
72C	Magnetic relay(inverter main circuit)	
CT12,22,3	Current sensor(AC)	
CH11	Crankcase heater(for heating the compressor)	
DCL	DC reactor	
LEV1	Linear expansion valve	HIC bypass,Controls refrigerant flow in HIC circuit
LEV2a,b		Pressure control,Refrigerant flow rate control
SV1a	Solenoid valve	For opening/closing the bypass circuit under the O/S
SV5b		Outdoor unit heat exchanger capacity control

Symbol	Explanation	
SV9	Solenoid valve	For opening/closing the bypass circuit
TB1	Terminal block	Power supply
TB3		Indoor/Outdoor transmission cable
TB7		Central control transmission cable
TH2	Thermistor	Subcool bypass outlet temperature
TH3		Pipe temperature
TH4		Discharge pipe temperature
TH5		ACC inlet pipe temperature
TH6		Subcooled liquid refrigerant temperature
TH7		OA temperature
THBOX		Control box internal temperature
THHS		IGBT temperature
Z24,25	Function setting connector	

PFD-P250VM-E

SYMBOL	NAME
MF	Fan motor
I.B.	Indoor controller board
S.B.	Surge absorber board
IFB	External input/output board
TB2	Power source terminal bed
TB5	Transmission terminal bed
TB15	Transmission terminal bed
TB21	Terminal bed for distant location on/off <No voltage or current>
TB22	Terminal bed for distant location display
TB23	Terminal bed for distant location on/off <With voltage and current>
F901	Fuse<6-3/6A>
F1	Fuse<5A>
ZNR1, ZNR2, ZNR901	Varistor
DSA1	Surge absorber
T	Transformer
LEV	Electronic linear expan.valve
52F	Contactor(fan I/D)
51F	Over current relay (fan I/D)
33P1	Float switch
TH21	Thermistor (inlet temp.detection)
TH22	Thermistor (piping temp.detection/liquid)
TH23	Thermistor (piping temp.detection/gas)
TH24	Thermistor (outlet temp.detection)
SW1(I.B.)	Switch (for mode selection)
SW2(I.B.)	Switch (for capacity code)
SW3(I.B.)	Switch (for mode selection)
SW4(I.B.)	Switch (for model selection)
SW9	Switch (normal/local)
SW11(I.B.)	Switch (1st digit address set)
SW12(I.B.)	Switch (2nd digit address set)
SW14(I.B.)	Switch (connection No.set)
SWC(I.B.)	Switch (outlet/inlet temp.control)
X11	Auxiliary relay(check)
Z1	Auxiliary relay(fan)
Z3	Auxiliary relay(fan failure detection)
L1	LED display (failure)
L2	LED display (status)
L3	LED display (check)
L4	LED display (power supply)
RC	MA Remote controller

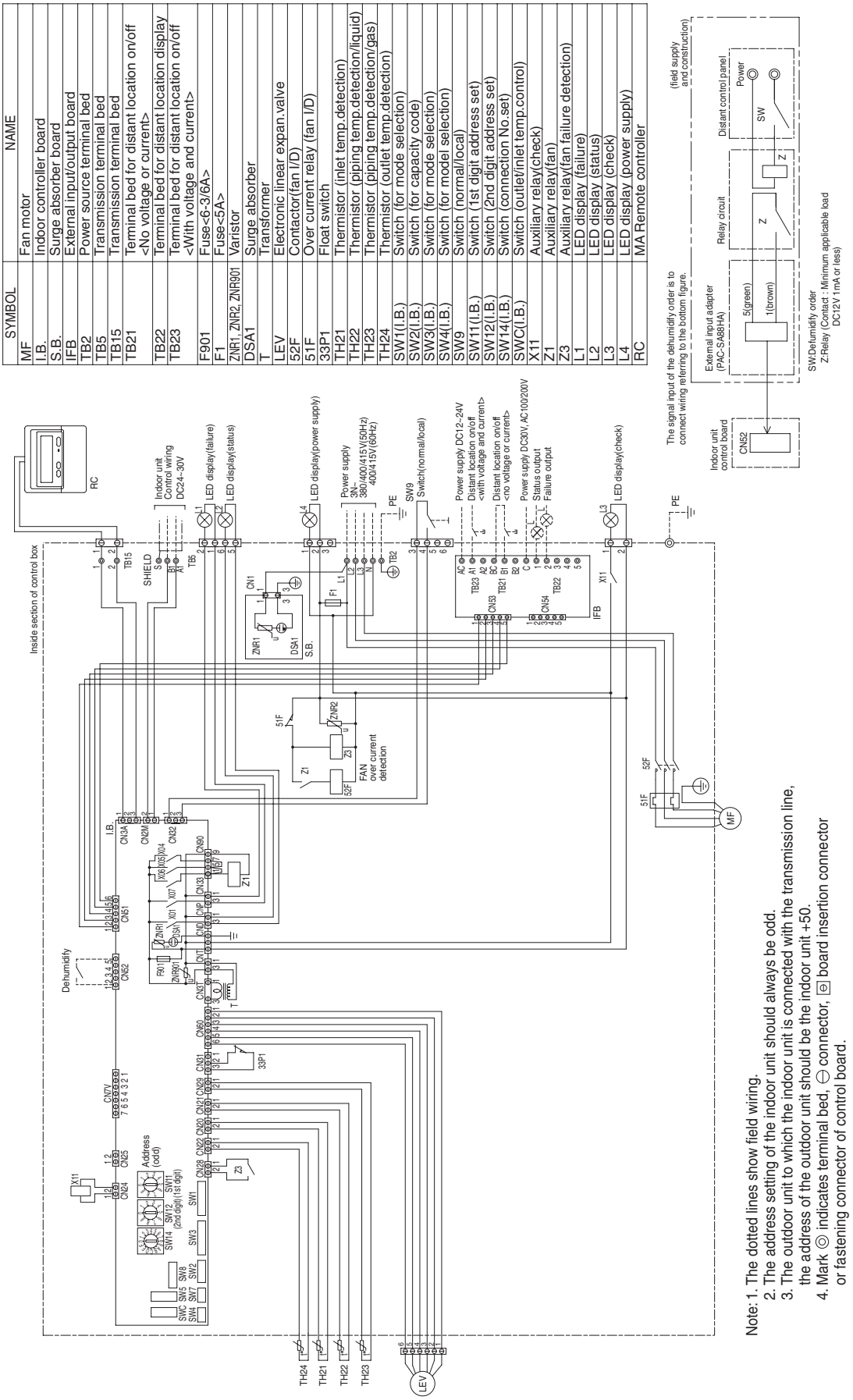

Note: 1. The dotted lines show field wiring.
2. The address setting of the indoor unit should always be odd.
3. The outdoor unit to which the indoor unit is connected with the transmission line, the address of the outdoor unit should be the indoor unit +50.
4. Mark ⓪ indicates terminal bed, ⊖ connector, ⊟ board insertion connector or fastening connector of control board.

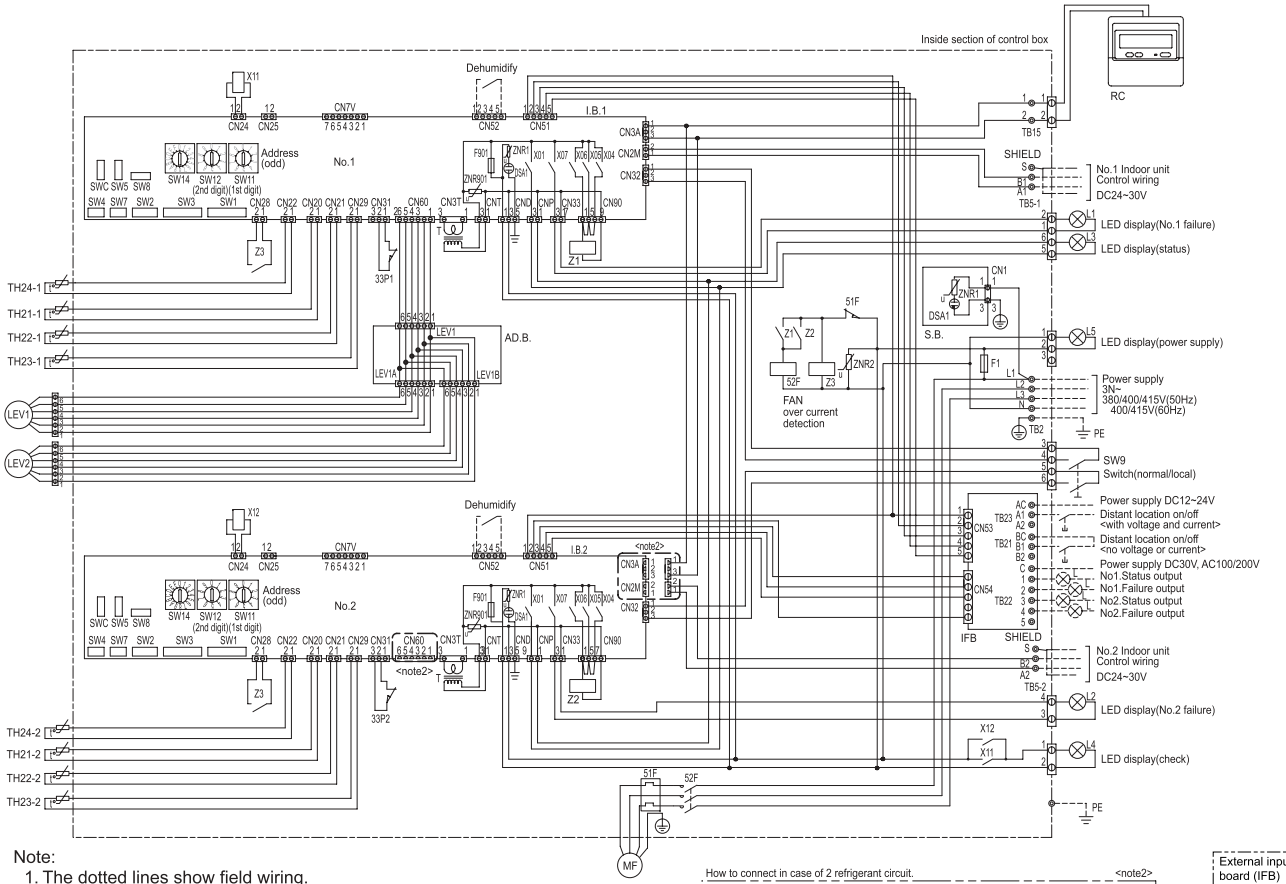

SYMBOL	NAME
MF	Fan motor
I.B.1, I.B.2	Indoor controller board
AD.B.	Adapter board
S.B.	Surge absorber board
IFB	External input/output board
TB2	Power source terminal bed
TB5-1, -2	Transmission terminal bed
TB15	Transmission terminal bed
TB21	Terminal bed for distant location on/off <No voltage or current>
TB22	Terminal bed for distant location display
TB23	Terminal bed for distant location on/off <With voltage and current>
F901	Fuse <6.3/6A>
F1	Fuse <5A>
ZNR1, ZNR2, ZNR901	Varistor
DSA1	Surge absorber
T	Transformer
LEV1, 2	Electronic linear expan.valve
52F	Contactor(fan I/D)
51F	Over current relay (fan I/D)
33P1, 33P2	Float switch
TH21-1, TH21-2	Thermistor (inlet temp.detection)
TH22-1, TH22-2	Thermistor (piping temp.detection/liquid)
TH23-1, TH23-2	Thermistor (piping temp.detection/gas)
TH24-1, TH24-2	Thermistor (outlet temp.detection)
SW1(I.B.)	Switch (for mode selection)
SW2(I.B.)	Switch (for capacity code)
SW3(I.B.)	Switch (for mode selection)
SW4(I.B.)	Switch (for model selection)
SW9	Switch (normal/local)
SW11(I.B.)	Switch (1st digit address set)
SW12(I.B.)	Switch (2nd digit address set)
SW14(I.B.)	Switch (connection No.set)
SWC(I.B.)	Switch (outlet/inlet temp.control)
X11, X12	Auxiliary relay(check)
Z1, Z2	Auxiliary relay(fan)
Z3	Auxiliary relay(fan failure detection)
L1	LED display (No.1 failure)
L2	LED display (No.2 failure)
L3	LED display (status)
L4	LED display (check)
L5	LED display (power supply)
RC	MA Remote controller

Note:
1. The dotted lines show field wiring.
2. It is wiring for 1 refrigerant system at the time of shipping. Change wiring and SW2, 3, 4 (No.1&No.2) as this figure in field when you change it to 2 refrigerant circuit
3. Set up the address of No.1 board in the odd number, and set up the address of No.2 board in the even number. But, set up the address of the No.2 board in the No.1 board +1.
4. The outdoor unit to which the indoor unit is connected with the transmission line, the address of the outdoor unit should be the indoor unit +50.
5. Mark ◎ indicates terminal bed, ⊖connector, ⊡board insertion connector or fastening connector of control board.

How to connect in case of 2 refrigerant circuit. <note2>

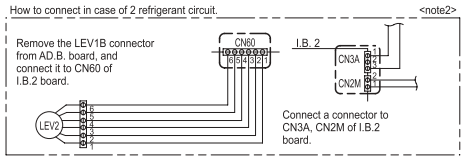

How to set up to SW2, 3, 4.
(In case of 2 refrigerant circuit) <note2>

PFD-P500VM-E	SW2	SW3	SW4
1 refrigerant circuit (at the time of shipping)	ON 1 2 3 4 5 6	ON 1 2 3 4 5 6 7 8 9 10	ON 1 2 3 4 5
2 refrigerant circuit	ON 1 2 3 4 5 6	ON 1 2 3 4 5 6 7 8 9 10	ON 1 2 3 4 5

External input-output board (IFB)

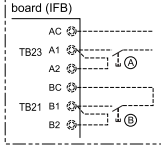

When using the external input function on the indoor unit that is connected to a two-refrigerant circuit, connect the short-circuit plate that is supplied with the unit to the appropriate terminals on the external input-output board.

The case of with-voltage input ···Ⓐ
The case of no-voltage input ····Ⓑ

The signal input of the dehumidify order is to connect wiring referring to the bottom figure.

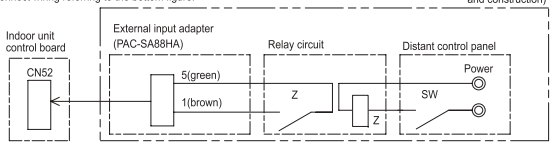

SW:Defumidify order
Z:Relay (Contact : Minimum applicable load DC12V 1mA or less)

6. Refrigerant Circuit Diagram And Thermal Sensor

Outdoor Unit : PUHY-P250YHM-A
Indoor Unit : PFD-P250VM-E

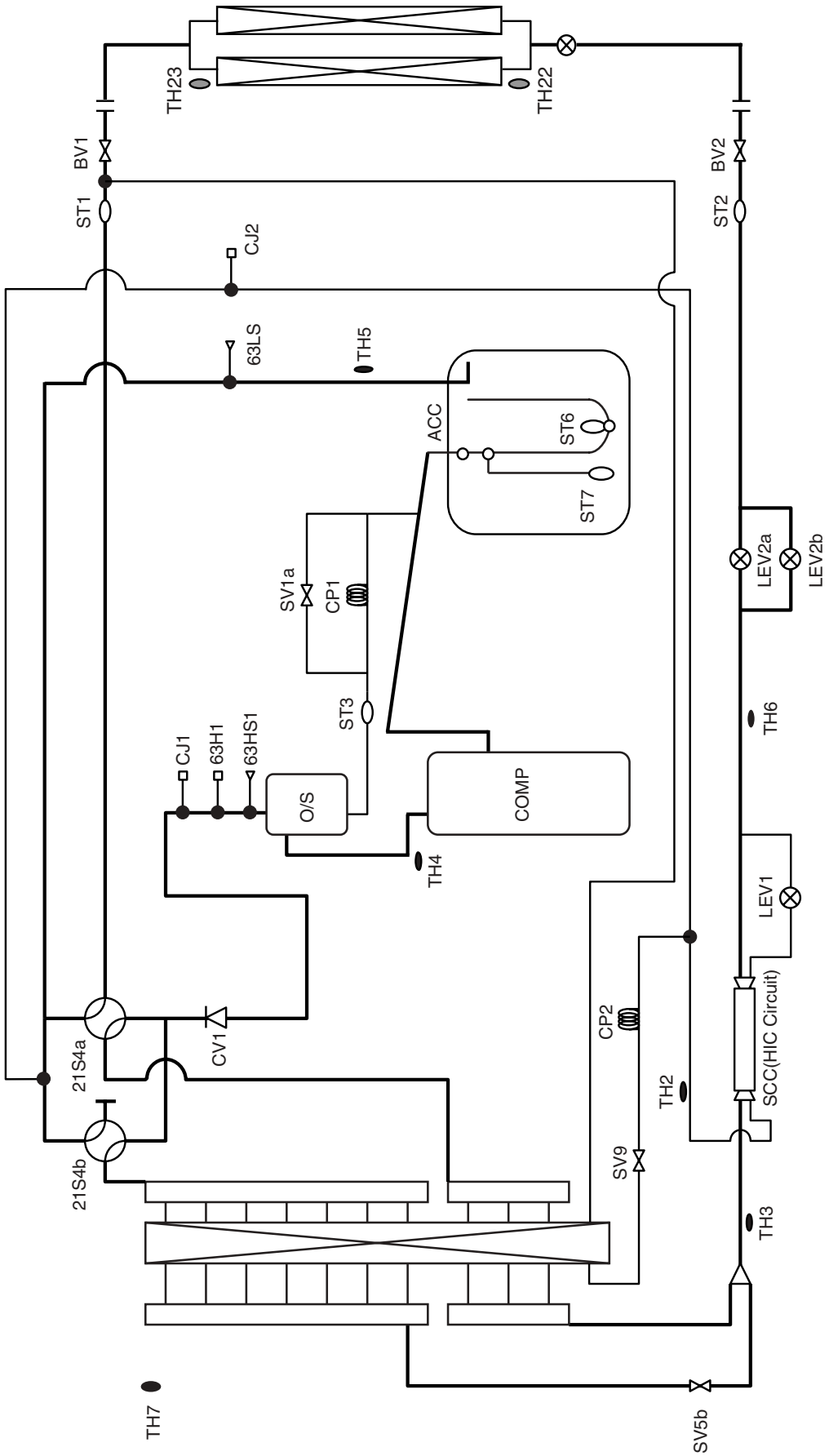

Outdoor Unit : PUHY-P250YHM-A x 2
Indoor Unit : PFD-P500VM-E

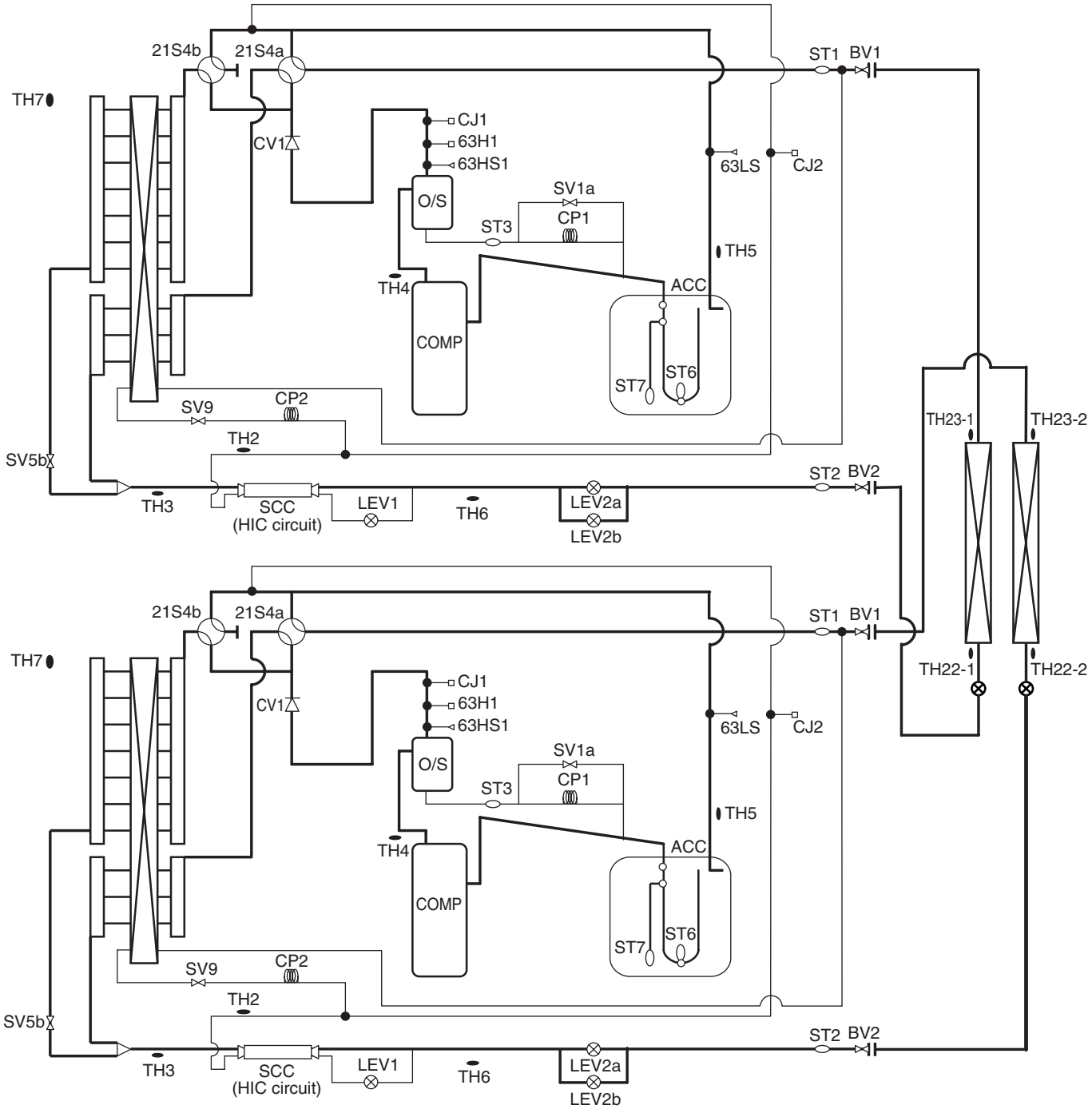

7. System Design

7-1.Refrigerant Piping System

■ **Sample connection**

<Refrigerant system with one outdoor unit>

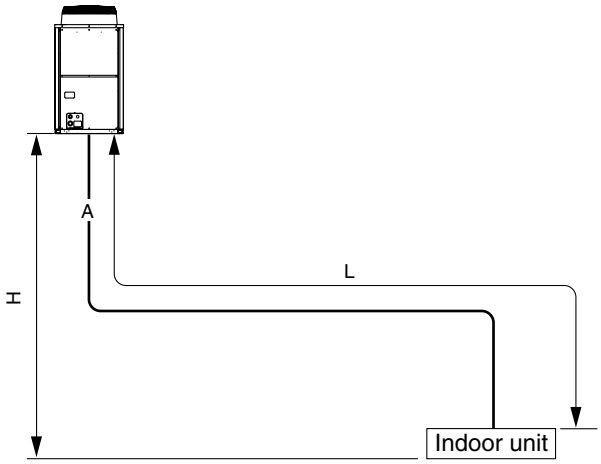

<Refrigerant system with two outdoor units>

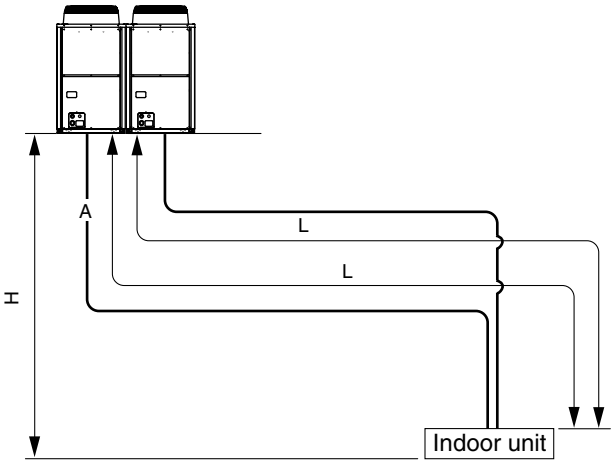

Allowable piping length	Farthest piping length(L)	165 m or less in actual length
Allowable height difference	Height difference between indoor and outdoor units (H)	50 m or less (40 m if outdoor unit is below indoor unit, 15 m if outside temperature is 10˚C or below)

■ **Pipe selection**

Outdoor unit model	Liquid pipe size	Gas pipe size
P250	ø 9.52 ✻1	ø 22.2

✻1 Use ø 12.7 pipes when the pipe length exceeds 90 m.

■ **Amount of refrigerant charge**

Refrigerant for extension piping is not included at factory shipment. Add an appropriate amount of refrigerant for each system on site. Write down the size and the length of the piping in each system as well as the amount of added refrigerant on the outdoor unit as a reference for servicing.

■ **Calculating the amount of refrigerant to be added**

- The amount of refrigerant that is necessary for extension piping is calculated based on the size and the length of the liquid piping.
- Use the following formula to figure out the amount of refrigerant to be added.
- Round up the calculation result to the nearest 0.1 kg. (e.g., If the result is 16.08 kg, round up the .08 to .1 , which yields 16.1 kg.)

<Amount of refrigerant to be added>

✻ Refrigerant charge calculation

Liquid pipe size Total length of the ø 12.7 pipes x 0.12	+	Liquid pipe size Total length of the ø 9.52 pipes x 0.06	+
(m) x 0.12(kg/m)		(m) x 0.06(kg/m)	

Total capacity of connected indoor units	Amount for the indoor unit
P250 model	2.0kg
P500 model	4.0kg ✻ 2 kg x 2 when connected to a system with two outdoor units

✻ Amount of charged refrigerant at factory shipment

Outdoor unit model	Charged refrigerant amount(kg)
P250	9.0

✻Sample calculation

<Connection to a system with two outdoor unit>

500 model indoor unit : When ø 9.52 pipes are used and the piping length is 80 m
80(m) x 0.06(kg/m)+2.0kg=6.8kg
(Amount for the extension pipe to each outdoor unit)

⚠ **Caution**

Charge Liquid Refrigerant

Filling the equipment with gas refrigerant will result in a power loss due to transformation of refrigerant in the tank.

7-2.Control Wiring

Restrictions when the PFD-type indoor units are connected (related to the system)

(1) The PFD-type indoor units cannot be connected to the ME remote controller.
(2) The address settings must be made on this system.
(3) The following functions cannot be selected on the PFD-type indoor units.
  1) Switching between automatic power recovery Enabled/Disabled (Fixed to "Enabled" in the PFD-type indoor units)
  2) Switching between power source start/stop (Fixed to "Disabled" in the PFD-type indoor units)
(4) The PFD-type indoor units and other types of indoor units cannot be grouped.
(5) The following functions are limited when the system controller (such as G-50A) is connected.
  1) To perform group operation in the system with two refrigerant circuits (combination of two outdoor units and one indoor unit: P500 model only), the addresses of the controller boards No.1 and No.2 on a indoor unit must be set within a group.
  2) The local operation cannot be prohibited with the system controller.
  3) When the switches of the PFD-type indoor units are set as follows, the unit ON/OFF operation cannot be made with the system controller.
  · When the Normal/Local switching switch is set to "Local"
  · When the DipSW1-10 on the control circuit board is set to "ON"
  4) The PFD type indoor units cannot be grouped with other types of indoor units.

(1) Specifications of control wiring and maximum length of wiring

Transmission line is a type of control line. When the source of noise is located adjacent to the unit, the use of shield cable as well as moving the unit as far away from the noise source are recommended.

① Transmission line (M-NET transmission line)

System component		For multiple-refrigerant system
Wiring specifications	Length of transmission line	n/a
	Facility type (noise level measurement)	All types of facilities
	Cable type	Shield cable CVVS · CPEVS · MVVS
	No. of cable	2-core cable
	Diameter	Over 1.25mm^2
Total length of indoor/outdoor transmission line		Maximum length: 200m Maximum length of centralized control transmission line and Indoor/Outdoor transmission line via indoor/outdoor units: 500m maximum

② Remote control wiring

		MA remote controller ✻ 1
Wiring specifications	Cable type	VCTF · VCTFK · CVV · CVS · VVR · VVF · VCT
	No. of cable	2-core cable
	Diameter	0.3~1.25mm^2 ✻ 2 (0.75~1.25mm^2) ✻ 3
Total Length		Maximum length: 200 m

✻ 1: “MA remote controller” includes MA remote controller, Simple MA controller, and wireless remote controller.
✻ 2: Cables with a diameter of 0.75mm^2 or smaller recommended for easier handling.
✻ 3: When connecting to Simple MA controller terminal, use a cable with a diameter within the range shown in the parenthesis.

7-3.Types of switch settings and setting methods

Whether a particular system requires switch settings depends on its components. Refer to the section “7-4 Sample System Connection” before conducting electrical work.
Keep the power turned off while setting the switches. If settings are changed while being powered, the changed settings will not register, and the unit may malfunction.

Unit		Symbol	Turn off the power to
Outdoor unit		OC	Outdoor unit
Indoor unit	Main/sub controllers ✻	IC	Indoor and outdoor units

✻ 10HP has only the main controller

(1) Address setting

The need for address settings and the range of address setting depend on the configuration of the system. Refer to “Sample System Connection”.

Unit or controller		Symbol	Address setting range	Address setting method	Factory setting Model
Indoor unit	Main · Sub	IC	01~50 (Note 1)	In case of 10HP system, assign an odd number starting with "01". In case of 20HP system with two refrigerant circuits, assign a sequential odd number starting with "01" to the upper indoor controller, and assign "the address of the upper indoor controller + 1" to the lower indoor controller. (For the system with one refrigerant circuit, the lower circuit board is not used.)	00
MA remote controller		MA	No address setting required.	(The main/sub switch must be configured if two remote controllers are connected to the system or if the indoor units are connected to different outdoor units.)	Main
Outdoor unit		OC	51~100	Add 50 to the address assigned to the indoor unit connected the system with one outdoor unit.	00

(Note1) If a given address overlaps any of the addresses that are assigned to other outdoor units, use a different, unused address within the setting range.

(2) Power supply switch connector connection on the outdoor unit

(Factory setting: The male power supply switch connector is connected to CN41.)

System configuration	Connection to the system controller	Power supply unit for transmission lines	Grouping the indoor units connected to different outdoor units	Power supply switch connector connection
System in which indoor units connected to one outdoor unit	——	——	——	Leave the male connector on CN41 as it is. (Factory setting)
System in which indoor units connected to multiple outdoor units	Not connected	——	Not grouped	
			Grouped	Disconnect the male connector from the female power supply switch connector (CN41) and connect it to the female power supply switch connector (CN40) on only one of the outdoor units (OC). *Connect the S (shielded) terminal on the terminal block (TB7) on the outdoor unit whose male connector on CN41 was disconnected and connected to CN40 to the earth terminal (⏚) on the control box.
	With connection to indoor-outdoor transmission line	Not required	Grouped /Not grouped	
	With connection to transmission line for centralized control	Not required (Powered from the outdoor unit)	Grouped /Not grouped	
		Required	Grouped /Not grouped	Leave the male connector on CN41 as it is. (Factory setting)

⁎ When the system controller is connected to the indoor/outdoor transmission line and the power is supplied from the outdoor unit, do not to turn off the outdoor unit. If its power supply is cut, the power is not supplied to the system controller, and the functions will not work.

(3) Choosing the temperature detection spot by indoor unit (Factory Setting: SWC "Standard")

When using the suction temperature sensor, set SWC to "Option."
(The discharge temperature sensor is supplied as standard specification.)

(4) Setting the MA "Sub" controller

When using two remote controllers or running two indoor units as a group, one of the controllers must be set to "Sub" controller.
⁎ No more than two remote controllers can be connected to a group.
(Factory setting: "Main")
Set the controller according to the following procedure. Refer also to the instructions manual supplied with the MA remote controller.

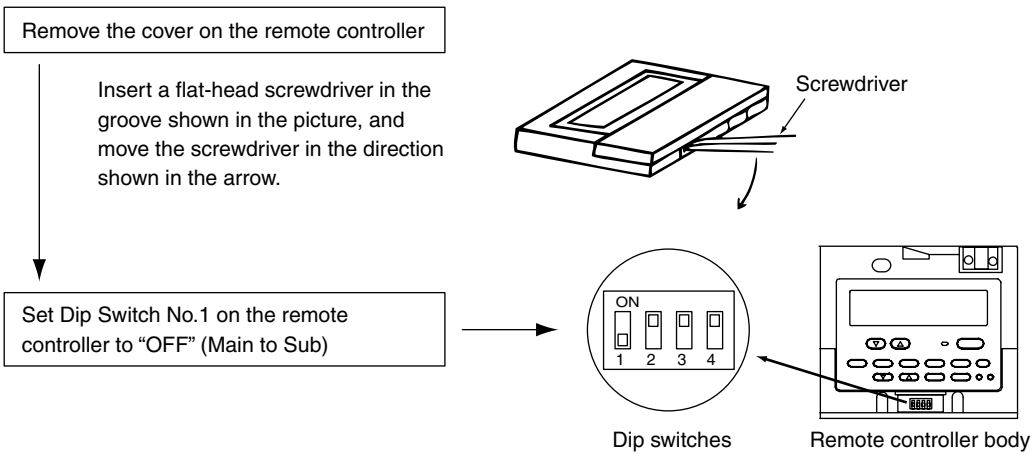

(5) Connection of two refrigerant circuits

When two refrigerant circuits are connected on site, make the switch settings on the controller circuit board following the instructions described in the installation manual for the indoor unit.

7-4.Sample System Connection

(1) An example of a system to which an MA remote controller is connected

① System connected to one outdoor unit

Control Wiring Diagram

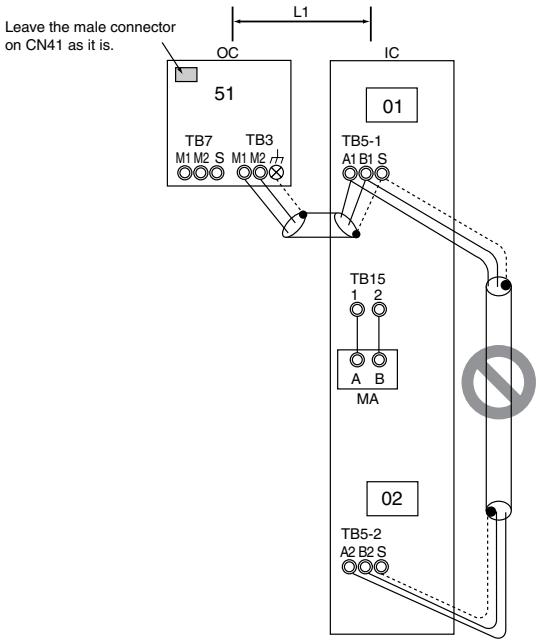

※ One indoor controller (controller circuit board) is equipped in the indoor unit (10HP), and two indoor controllers (controller circuit boards) are equipped in the indoor unit (20HP).

Notes

1. Leave the male connector on the female power supply switch connector (CN41) as it is.
2. Grounding to S terminal on the terminal block for transmission line for centralized control (TB7) is not required.
3. Although two indoor controllers (controller circuit boards) are equipped inside the indoor unit (20HP), the board on No.2 side (lower side) is not used. Do not connect wiring to the lower controller circuit board.
4. The outdoor unit cannot be connected to the units other than the PFD series indoor units.

Maximum Allowable Length

<a. Indoor/Outdoor transmission line>
Maximum Length (1.25mm² or more)
L1 ≦ 200m

Wiring and Address Setting

<a. Indoor/Outdoor transmission line>
Connect M1, M2 terminals of the indoor/outdoor transmission line terminal block (TB3) on the outdoor unit (OC) and A1, B1 terminals of the indoor/outdoor terminal block (TB5-1) on the indoor unit (IC). (Non-polarized 2-core cable) *Only use shielded cables.

[Shielded cable connection]
Connect the earth terminal of the OC and S terminal of the IC terminal block (TB5-1).

<b. Switch setting>
Address setting is required as follows.

Steps	Unit or controller			Address setting range	Address setting method	Notes	Factory setting
1	Indoor unit	Main	IC	01~50	Assign a sequential odd number starting with "01" to the upper indoor controller.		00
		Sub	IC	01~50	Assign sequential numbers starting with the address of the main unit in the same group. (Main unit address +1)		
2	Outdoor unit		OC	51~100	Add 50 to the address assigned to the indoor unit connected to the system with one outdoor unit.		00
3	MA remote controller	Main Controller	MA	Setting not required.	———		Main
		Sub Controller	MA	Sub Controller	Settings to be made with the sub/main switch		

(1) An example of a system to which an MA remote controller is connected

② System connected to two outdoor units

Control Wiring Diagram

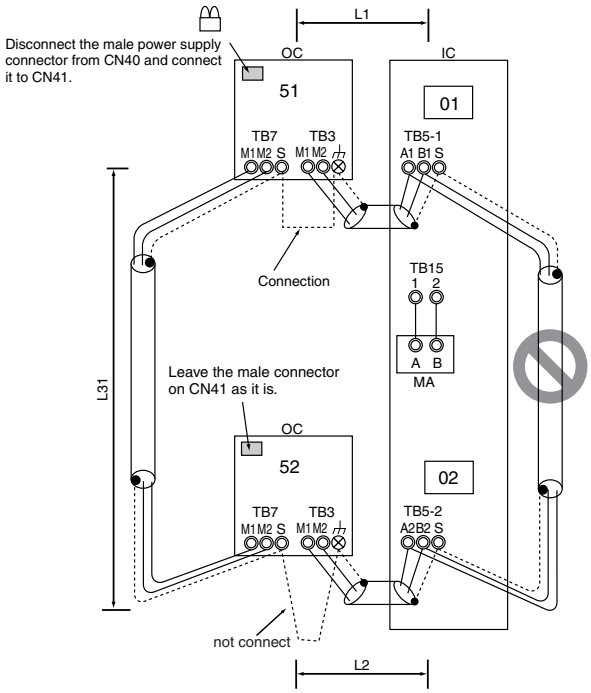

※ One indoor controller (controller circuit board) is equipped in the indoor unit (10HP), and two indoor controllers (controller circuit boards) are equipped in the indoor unit (20HP).

Notes

1. Assign a sequential number to the outdoor unit.
2. Do not connect the terminal blocks (TB5) of the indoor units connected to different outdoor units.
3. Disconnect the male connector on the controller board from the female power supply switch connector (CN41), and connect it to the female power supply switch connector (CN40) on only one of the outdoor units.
4. Provide grounding to S terminal on the terminal block for transmission line for centralized control (TB7) on only one of the outdoor units.
5. When the power supply unit is connected to the transmission line for centralized control, leave the male connector on the female power supply switch connector (CN41) as it is at factory shipment.
6. The outdoor unit cannot be connected to the units other than the PFD series indoor units.

Maximum Allowable Length

<a. Indoor/Outdoor transmission line>
Maximum Length (1.25mm² or more)
L1, L2 ≦ 200m

<b. Transmission line for centralized control>
Maximum Length via outdoor unit (1.25mm² or more)
L1 + L31 + L2 ≦ 500m

Wiring and Address Setting

<a. Indoor/Outdoor transmission line>
Connect M1, M2 terminals of the indoor/outdoor transmission line terminal block (TB3) on the outdoor unit (OC) and A1, B1 terminals of the indoor/outdoor terminal block (TB5-1) on the indoor unit (IC). (Non-polarized 2-core cable) *Only use shielded cables.
[Shielded cable connection] Connect the earth terminal of the OC and S terminal of the IC terminal block (TB5-1).

<b. Transmission line for centralized control>
Daisy-chain terminals M1 and M2 on the terminal block for transmission line for centralized control (TB7) on each outdoor unit (OC).
Disconnect the male connector on the controller board from the female power supply switch connector (CN41), and connect it to the female power supply switch connector (CN40) on only one of the outdoor units. *Only use shielded cables.
[Shielded cable connection] To ground the shielded cable, daisy-chain the S-terminals on the terminal block (TB7) on each of the outdoor units. Connect the S (shielded) terminal on the terminal block (TB7) on the outdoor unit whose male connector on CN41 was disconnected and connected to CN40 to the earth terminal (⏚) on the electric box.

<c. Switch setting>
Address setting is required as follows.

Steps	Unit or controller			Address setting range	Address setting method	Notes	Factory setting
1	Indoor unit	Main	IC	01~50	Assign a sequential odd number starting with "01" to the upper indoor controller.		00
		Sub	IC	01~50	Assign sequential numbers starting with the address of the main unit in the same group. (Main unit address +1)		
2	Outdoor unit		OC	51~100	Add 50 to the address assigned to the indoor unit connected to the system with one outdoor unit.		00
3	MA remote controller	Main Controller	MA	Setting not required.	———		Main
		Sub Controller	MA	Sub Controller	Settings to be made with the sub/main switch		

(1) An example of a system to which an MA remote controller is connected

③ System in which two MA remote controllers are connected to one indoor unit

Control Wiring Diagram

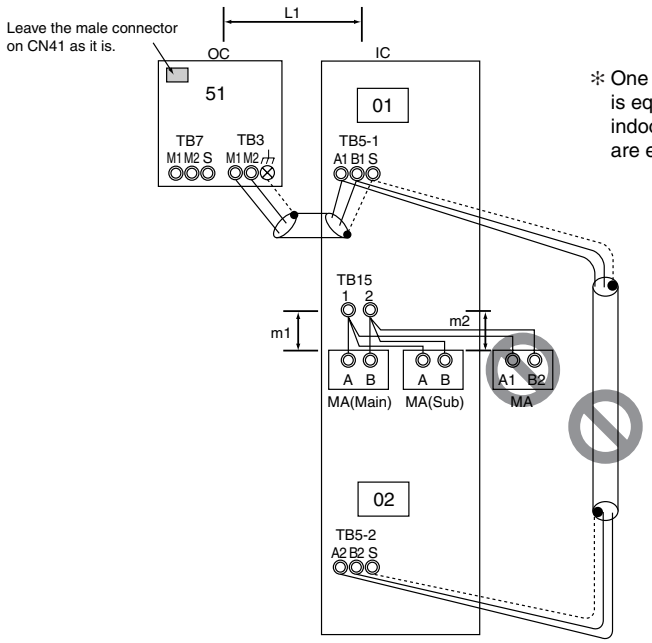

※ One indoor controller (controller circuit board) is equipped in the indoor unit (10HP), and two indoor controllers (controller circuit boards) are equipped in the indoor unit (20HP).

Notes

1. Leave the male connector on the female power supply switch connector (CN41) as it is.
2. Grounding to S terminal on the terminal block for transmission line for centralized control (TB7) is not required.
3. Although two indoor controllers (controller circuit boards) are equipped inside the indoor unit, the board on No.2 side (lower side) is not used. Do not connect wiring to the lower controller circuit board.
4. No more than two MA remote controllers (including both main and sub controllers) can be connected to a group of indoor units. If three or more MA remote controllers are connected, remove the wire for the MA remote controller from the terminal block (TB15).
5. The outdoor unit cannot be connected to the units other than the PFD series indoor units.

Maximum Allowable Length

<a. Indoor/Outdoor transmission line>
Same as (1) ①.

<b. MA remote controller wiring>
Maximum overall length (0.3-1.25mm^2 or more)
m1 + m2 ≦ 200m

Wiring and Address Setting

<a. Indoor/Outdoor transmission line>
Same as (1) ①.

<b. MA remote controller wiring>
[When two remote controllers are connected to the system]
When two remote controllers are connected to the system, connect terminals 1 and 2 of the terminal block (TB15) on the indoor unit (IC) to the terminal block on the MA remote controllers (option).
*Set the Main/Sub switch on the connected MA remote controllers (option) to SUB.
(See the installation manual for the MA remote controller for the setting method.)

<c. Switch setting>
Address setting is required as follows.

Steps	Unit or controller			Address setting range	Address setting method	Notes	Factory setting
1	Indoor unit	Main	IC	01~50	Assign a sequential odd number starting with "01" to the upper indoor controller.		00
		Sub	IC	01~50	Assign sequential numbers starting with the address of the main unit in the same group. (Main unit address +1)		
2	Outdoor unit		OC	51~100	Add 50 to the address assigned to the indoor unit connected to the system with one outdoor unit.		00
3	MA remote controller	Main Controller	MA	Setting not required.	———		Main
		Sub Controller	MA	Sub Controller	Settings to be made with the sub/main switch		

(1) An example of a system to which an MA remote controller is connected

④ System in which two indoor units are grouped with the MA remote controller

Control Wiring Diagram

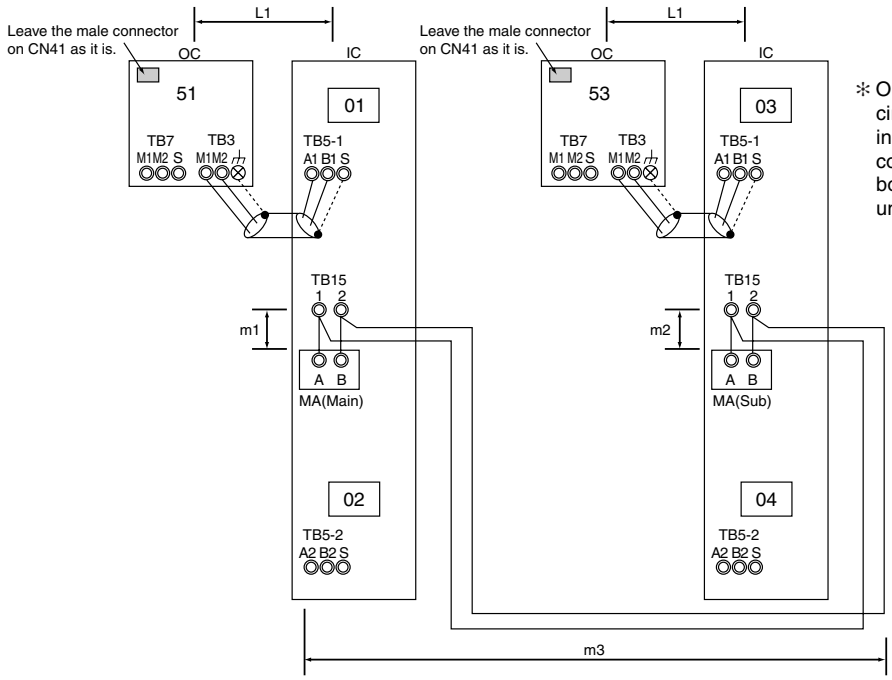

※ One indoor controller (controller circuit board) is equipped in the indoor unit (10HP), and two indoor controllers (controller circuit boards) are equipped in the indoor unit (20HP).

Notes

1. Leave the male connector on the female power supply switch connector (CN41) as it is.
2. Grounding to S terminal on the terminal block for transmission line for centralized control (TB7) is not required.
3. Although two indoor controllers (controller circuit boards) are equipped inside the indoor unit, the board on No.2 side (lower side) is not used. Do not connect wiring to the lower controller circuit board.
4. No more than two MA remote controllers (including both main and sub controllers) can be connected to a group of indoor units. If three or more MA remote controllers are connected, remove the wire for the MA remote controller from the terminal block (TB15).
5. The outdoor unit cannot be connected to the units other than the PFD series indoor units.

Maximum Allowable Length

<a. Indoor/Outdoor transmission line>
Same as (1) ①.

<b. MA remote controller wiring>
Maximum overall length (0.3-1.25mm^2 or more)
m1 + m2 + m3 ≦ 200m

Wiring and Address Setting

<a. Indoor/Outdoor transmission line>
Same as (1) ①.

<b. MA remote controller wiring>
[Group operation of indoor units]
To perform a group operation of indoor units (IC), daisy-chain terminals 1 and 2 on the terminal block (TB15) on all indoor units (IC). (Non-polarized 2-core cable)
*Set the Main/Sub switch on one of the MA remote controllers to SUB.

<c. Switch setting>
Address setting is required as follows.

Steps	Unit or controller			Address setting range	Address setting method	Notes	Factory setting
1	Indoor unit	Main	IC	01~50	Assign a sequential odd number starting with "01" to the upper indoor controller.		00
		Sub	IC	01~50	Assign sequential numbers starting with the address of the main unit in the same group. (Main unit address +1)		
2	Outdoor unit		OC	51~100	Add 50 to the address assigned to the indoor unit connected to the system with one outdoor unit.		00
3	MA remote controller	Main Controller	MA	Setting not required.	———		Main
		Sub Controller	MA	Sub Controller	Settings to be made with the sub/main switch		

(2) System with MA remote controller and G-50A

① System with multiple indoor units (10HP, 20HP)

Control Wiring Diagram

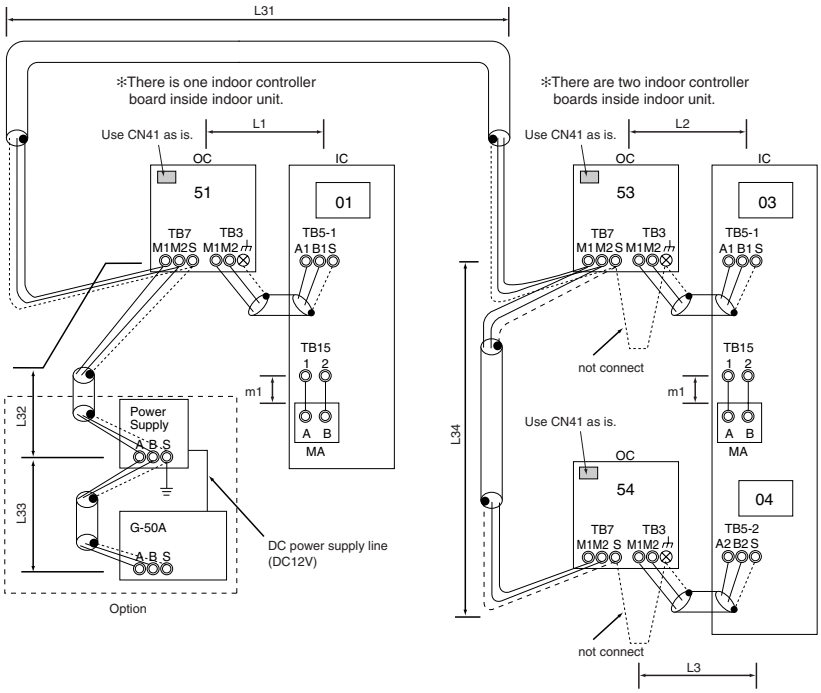

Notes

1. Be sure to use odd numbers to set the address for indoor units (10 HP and 20HP connected to the one outdoor unit).
2. To set the indoor unit address for 20 HP connected to two outdoor units, use odd numbers for the top controllers and use even numbers for the bottom controllers (Main controller plus 1).
3. Use the power supply switch connector (CN41) on the outdoor unit as is.
4. It is not necessary to ground the S terminal of transmission line terminal board for centralized controller on the outdoor unit.
5 No more than two main/sub remote controllers can be connected to the indoor unit in the same group. When more than two remote controllers are present in the system, disconnect MA remote controller from TB15 in the indoor unit.
6. Put both types of the addresses for P500-type indoor units in the same group when setting groups for indoor units with system controller (ex. G-50A).

Maximum Allowable Length

<a. Indoor/Outdoor transmission line>
L1, L2, L3 ≦ 200m

<b. Transmission Line for Centralized Control >
L31 + L32 + L33 + L34 + L3 ≦ 500m
L1 + L31 + L34 + L3 ≦ 500m

<c. MA Remote Controller Line >
Total Length (0.3 ~ 1.25mm^2)
m1 ≦ 200m

Wiring and Address Setting

<a. Indoor/Outdoor transmission line>
Same as (1) ①.

<b. Transmission line for centralized control>
Daisy-chain terminals M1 and M2 on the terminal block for transmission line for centralized control (TB7) on each outdoor unit (OC).
*Only use shielded cables.
[Shielded cable connection]
To ground the shielded cable, daisy-chain the S-terminals on the terminal block (TB7) on each of the outdoor units.

<c. Switch setting>
Address setting is required as follows.

Steps	Unit or controller			Address setting range	Address setting method	Notes	Factory setting
1	Indoor unit	Main (10HP, 20HP)	IC	01~50	Assign a sequential odd number starting with "01" to the upper indoor controller.		00
		Sub (20HP)	IC	01~50	Assign sequential numbers starting with the address of the main unit in the same group. (Main unit address +1)		
2	Outdoor unit		OC	51~100	Add 50 to the address assigned to the indoor unit connected to the system with one outdoor unit.		00
3	MA remote controller	Main Controller	MA	Setting not required.	———		Main
		Sub Controller	MA	Sub Controller	Settings to be made with the sub/main switch		

7-5.External input/output specifications

(1) Input/output specifications

Input

Function	Usage	Signals
Start/stop	Turning ON/OFF the indoor unit	· Pulse [Factory setting: Dip SW1-9 ON] (a-contact with voltage/without voltage) ⁎1 **<With voltage>** Power Source: DC12~24V Electrical Current: Approximately 10mA (DC12V) **<Standard Pulse>** 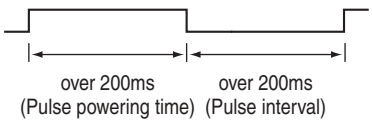 · Level [Dip SW1-9 OFF] Short: operate Open: stop
Dehumidi-fication signal	Sending a command to perform dehumidifi-cation with priority	Level Refer to the wiring diagram <Dehumidification command> shown on the page31.

⁎1 Use minute-current contact (DC12V 1mA)

Output

Function	Usage	Signal
No.1 Operation Status	Obtaining signals indicating operation status of indoor units in each refrigerant circuit.	Relay a-contact output DC 30V or AC 220~240V Standard Current : 1A Minimum Current : 1mA
No. 1 Error Status	Obtaining signals indicating error status of indoor units in each refrigerant circuit.	
No. 2 Operation Status ⁎	Obtaining signals indicating operation status of indoor units in each refrigerant circuit.	
No. 2 Error Status ⁎	Obtaining signals indicating error status of indoor units in each refrigerant circuit.	

⁎ 20HP only

(2) Wiring

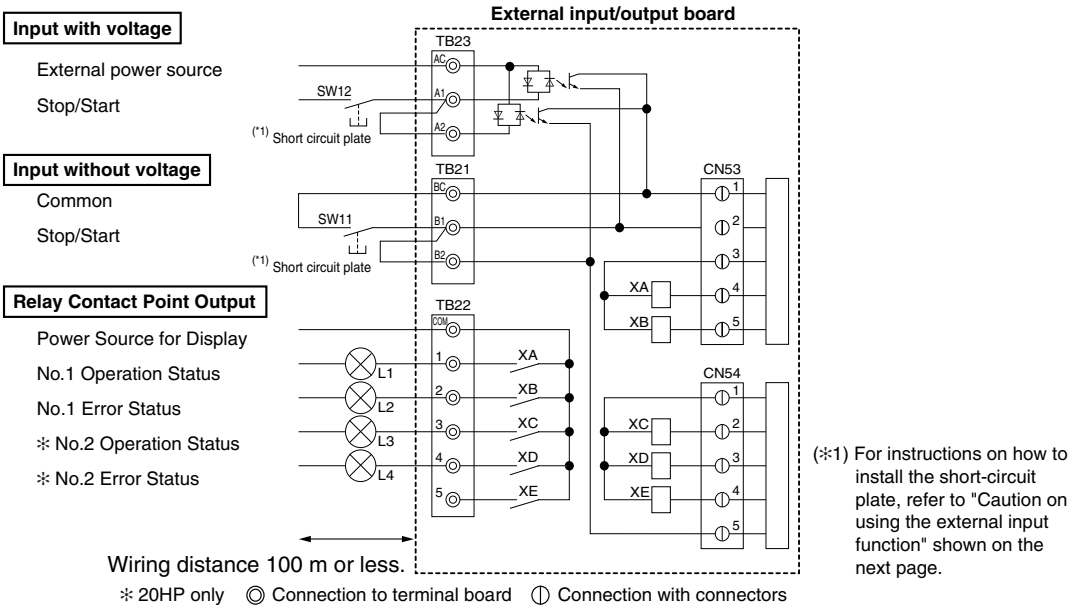

<Input with Applied Voltage>

External power source	DC12~24V Electrical current input (per contact) Approximately 10mA (DC12V)
SW12	Remote start/stop switch Each pressing of the SW (Pulse input) switches between ON and OFF.

<Input without voltage applied>

SW11	Remote start/stop ✻ Each pressing of the SW (Pulse input) switches between ON and OFF.
Contact: Minimum applicable load DC12V 1mA Contact rating DC12V 0.1A and over	

<Relay contact output>

Power supply for displays	DC30V or less 1A AC220-240V 1A	L3	No.2 Operation Status Indicator Lamp
L1	No.1 Operation Status Indicator Lamp	L4	No.2 Error Status Indicator Lamp
L2	No.1 Error Status Indicator Lamp	XA~XE	Relay (Permissible Electrical Current: 10mA~1A)

● Setting on the Indoor Unit

Confirm the following setting when using external input.

① No.1, No.2 Controller board Dip SW 3-8: ON (Factory Setting: ON; External input will not be available when OFF.)
② No.1, No.2 address board Dip SW 1-10: OFF (Factory Setting: OFF; External input will not be available when ON.)
③ Normal/Local switch inside the unit controller box is set to “Normal.” (Factory Setting: Normal; External input will not be available when it is set to “Local.”)

● Caution on using the external input function (20HP only)

> ⚠ **Caution**
>
> When using the external input function on the indoor unit that is connected to a two-refrigerant circuit, connect the short-circuit plate that is supplied with the unit to the appropriate terminals on the external input-output board.
> Without the short-circuit plate, the unit will not function properly.
> Don't connect the short-circuit plate in case of a one-refrigerant circuit.

· Connecting the short-circuit plate

<The case of with-voltage input>

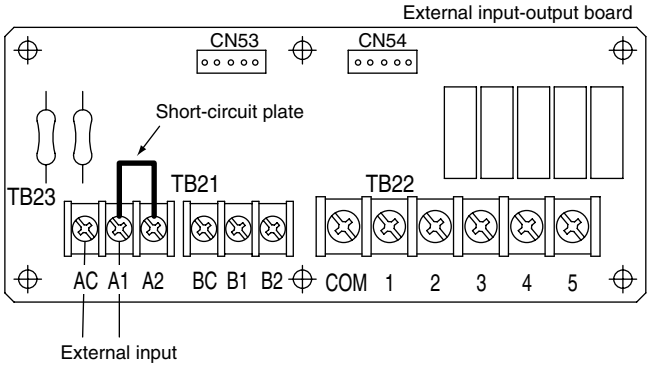

<The case of no-voltage input>

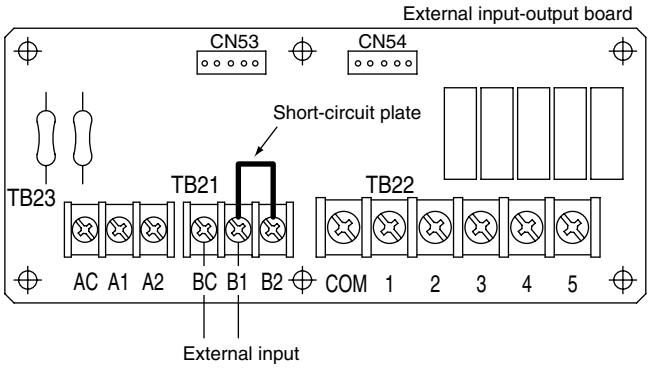

<Dehumidification command>

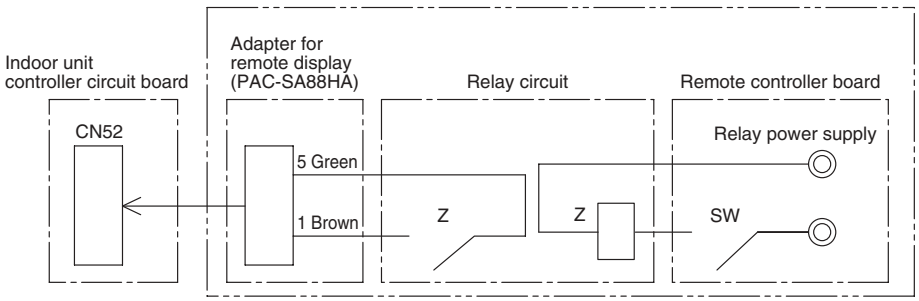

SW : Dehumidification command
Z : Relay
(Contact: Minimum applicable load DC12V 1mA
Contact rating DC12V 0.1A and over)

(3) Wiring Method

① Check the indoor unit setting (Refer to 7-5.(2) Wiring)
② When using the external output function, connect each signal line to External output Terminal (TB22) on the unit, depending on the usage.
③ When using external input function, peal the outer layer of the signal line off, and connect it to external input terminal (TB21 or TB23) on the unit, depending on the usage.

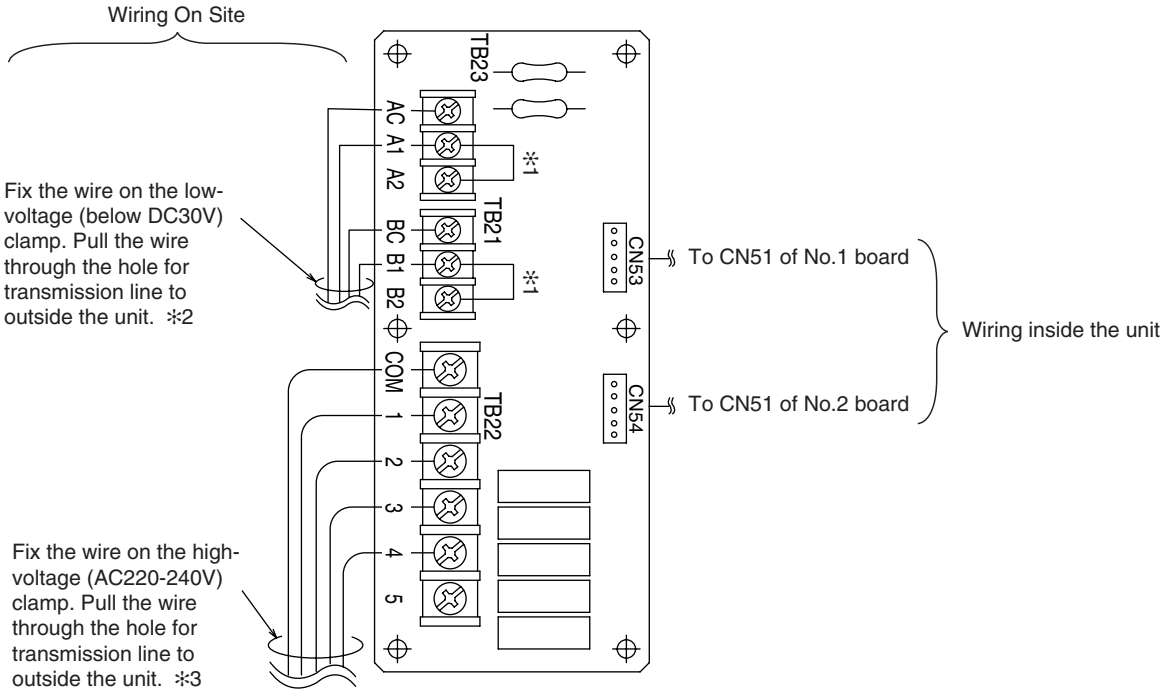

*1 For instructions on how to install the short circuit plate on the 20HP indoor unit, refer to "Caution on using the external input function" shown on the previous page.
*2 Do not bundle with high-voltage (AC220-240V) wire, since noise interference from such wire may cause the unit to malfunction.
*3 Do not bundle with minute-voltage (DC30V or below) wire, since noise interference from such wire may cause the unit to malfunction.

⚠ **Caution**

1) Wiring should be covered by insulation tube with supplementary insulation.
2) Use relays or switches with IEC or equivalent standard.
3) The electric strength between accessible parts and control circuit should have 2750V or more.
4) TB21 is a terminal specifically for No-voltage contact point input. Do not apply voltage to TB21, since it must result in malfunction of indoor unit controller board.
5) TB23 is specifically for contact point input with voltage. Check the polarity before connecting to avoid damage to the unit.
6) **Keep the wires on the input side and on the output side away from each other when using AC220-240V as a power source for displays.**
7) Keep the length of the extension part of external signal line under 100m.
8) 20HP is shipped with B1 and B2 terminals of TB21 and A1 and A2 terminals of TB23 short-circuited respectively. Do not eliminate this feature. If it is eliminated, the units in one of the two refrigerant circuits may not operate.

(4) Switch setting

● **The suction/discharge temperature control of the indoor unit.**

Either suction temperature control or discharge temperature control can be selected .
The suction/discharge temperature control can be switched by the switches (SWC) on the controller circuit board inside the controller of the indoor unit.
The discharge temperature control is selected at factory shipment. (SWC is set to “Standard.”)
To switch the control, set SWC on two controller circuit boards inside the controller as follows.

To perform suction temperature control: Set SWC to “Option (OP)”
To perform discharge temperature control: Set SWC to “Standard”

The setting for the SWC on the two controller circuit boards must be the same (applicable only when connecting to a two-refrigerant circuit).
*Only the suction temperature control is performed in the heating mode regardless of the SWC setting.

(5) Dehumidification priority control

This unit can be operated in the dehumidification priority control by receiving external signals (CN52 on indoor unit).
The unit goes into the dehumidification priority control when dehumidification signal is received for 10 continuous minutes during cooling operation. The unit resumes normal operation when the signal goes off or when the suction temperature reaches 13˚C or below.
When the unit is in this control, the unit is operated at the maximum capacity regardless of the actual setting, so the room temperature may reach below the preset temperature.
If this is a problem, install a circuit that turns off the dehumidification signal based on the room temperature.
The model of units described in this manual does not support the reheat function, so it does not allow both the temperature and humidity to be controlled simultaneously.

(6) Normal/Local switching switch (SW9)

When selecting the “Local” mode using the Normal/Local switching switch beside the MA remote controller on indoor unit, the local operation is enabled, and the remote ON/OFF operation (external input or system controller) is disabled.
If no external input is available, the local operation is enabled in both “Nomal” and “Local” modes.
The occurred error is not reported to the upper system, such as building management system including system controller. (If an error occurs during inspection, the occurred error is reported only to the units, and the error history remains on the units.)

7-6.System Rotation Control

Applicable Units

Indoor units: PFD-P250, 500VM-E
Outdoor unit: PUHY-P250YHM-A(-BS)

⚠ CAUTION

● To enable this control function, the following wiring and settings are required at installation.

1) Daisy-chain terminals M1 and M2 on the terminal block for transmission line for centralized control (TB7) on all applicable outdoor units.
   Move the power jumper connected to CN41 to CN40 on only one of the outdoor units.
   To supply power to the outdoor unit from a power supply unit, leave the power jumper connected to CN41as it is (factory setting).
2) Check that the label on the indoor unit circuit board reads KE90D352, if it does not, replace the circuit board.
3) Set the SW1-9 and SW1-10 on indoor units as follows to enable the external input: (SW1-9: ON; SW1-10: OFF).
4) Assign sequential addresses to the units as shown below (Figure 1).
   (Only use odd numbers for the 10HP system.)
5) Make the rotation group settings by setting the appropriate switches on the outdoor units.

1. General Descriptions

- Each group can consist of a maximum of 5 systems and a minimum of 2 systems.
- With the use of this control function, one system in a given group serves as a backup and remains stopped.
- The unit designated as the control unit (System 1 in Figure 1) sends command signals to other units in the group to start or stop, and rotates the backup unit every 480 hours.
- Rotation sequence is in the ascending order of address, starting from the lowest address after the control unit address.
  (e.g., System 2→System 3→System 4→System 5→System 1 in Figure 1 below)
- If other units in the group detect an error or if there is a communication failure between the systems, this control is terminated, and the backup unit goes into operation.

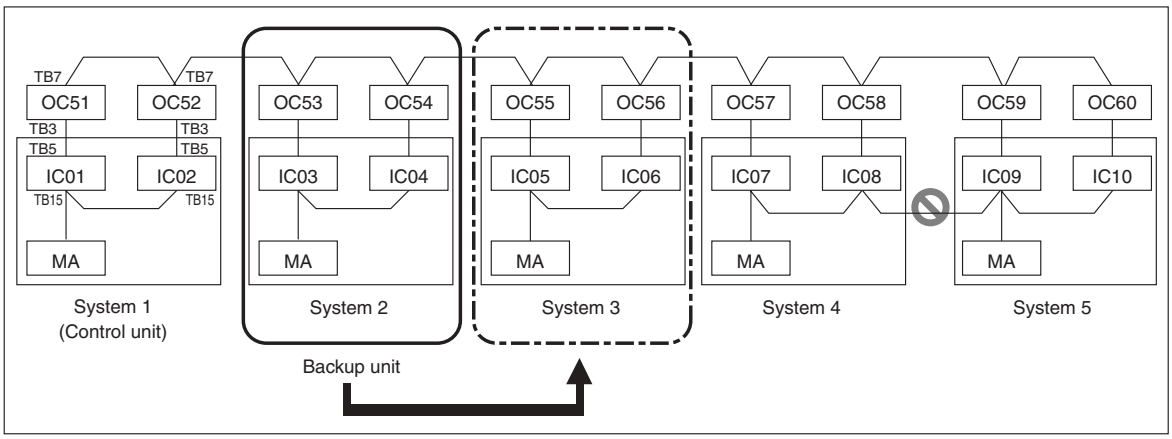

Figure 1 Sample 20HP system group

7-7.Notes on the use of optional accessories

⚠ WARNING

Only use optional parts recommended by Mitsubishi Electric. These parts should only be installed by a qualified technician. Improper installation may result in water leakage, electric shock, or fire.

8. Air Conditioning the Computer Room

8-1 Main Features of the Floor-Duct Air Conditioners

This system is installed by building a floor over an existing floor and using the space between these two floors as an air-conditioning duct.
This system has the following characteristics:

① The temperature and humidity can efficiently and reliably be controlled, since the air-conditioned air is sent directly to the machine.

② It provides a comfortable environment for the operator, since the air can be conditioned to best suit the needs of the operator and machines.

③ It is favorable in terms of appearance because the air-conditioning duct is out of sight.

④ The location of the duct is irrelevant when considering adding new machines or rearranging the existing machines, since the entire floor serves as the air duct.

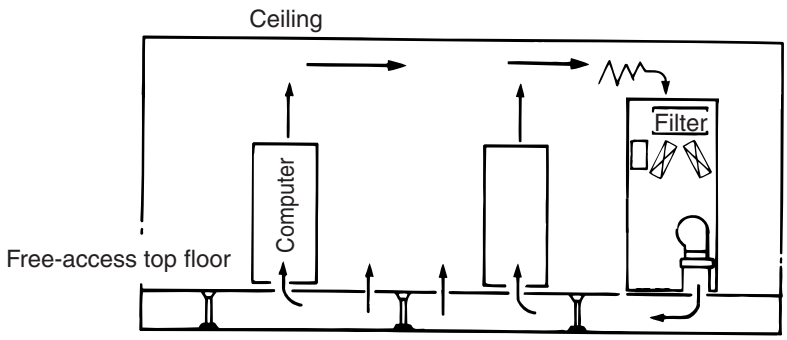

Caution

(1) Unlike plenum ventilation and overhead-duct type conditioners, since the conditioned air is not mixed with the air in the room, the air that comes out of the unit has to meet the predetermined conditions (constant temperature/constant humidity) at the time the air exits the unit.
Close attention must be paid to the auto-controlling system.

(2) Dust in the duct space (between the free-access top floor and the existing floor) must be thoroughly removed before installing the unit.

(3) Since the existing floor is cooled by the unit, it may produce dews on the ceiling of the room down below.

8-2 Features of air-conditioner for computer room

Air-conditioner for computer room is designed to maintain a constant room temperature and humidity. For underfloor air supply systems, providing air that meets predetermined requirements is a must. The compressor installed in this unit runs year around. The capacity controlled compressor regulates the outlet air temperature (or inlet air temperature) depending on the load change. The humidifier (Configure to Order) installed in this unit humidifies a room to a target humidity, and regulates the humidity. With priority dehumidification control (a dehumidifier must be installed on site), a room is dehumidified to a target humidity. Since the reheat function is not equipped, the room temperature may drop below the predetermined temperature due to a load inside the room. Therefore, the absolute humidity drops whereas the relative humidity may not drop to a target humidity.

8-3 Step-by-Step Plan for the Implementation of the Air-Conditioning

Purpose — Making decisions on the computer system

↓

Basic Conditions
- Accommodates possible future expansion (ensuring the acquisition route)
- Operation schedule
- Back-up system (in case of breakdowns, power outage, water-supply cut offs etc.)
- Air conditioning methods (continuous, floor-duct type etc.)

↓

Securing Necessary Rooms
- Computer room, CVCF room, MT Disk Storage room
- Supplementary computer room, system surveillance room
- Programmer room, operator room
- Battery room, transformer room

↓

Decision to Install the Air-Conditioning System

↓

Setting the Conditions for the Room — Temperature/humidity Condition

↓

Calculating the Load

↓

Selecting the Air-Conditioner Model

↓

Selecting the Controllers

↓

Total System — Air-conditioning operation panel (secure individual operation circuit), Auto Controller (temperature and humidity indicator/recorder), management, safety, laws, maintenance, earthquake proof, anti-vibration (floor load, anti-vibration device), noise control, etc.

8-4 Conditions for the Installation of Computer-Room Air Conditioners

(1) Outdoor Temperature and Humidity

Generally the values set for general air conditioners are used, although the value higher than the maximum outdoor temperature and humidity may be set for devices like computer-room air conditioners that must keep the air temperature and humidity under predetermined levels.

(2) Indoor Temperature and Humidity

There is a wide range of conditions set by different computer manufacturers, and the conditions need to be set in consultation with the manufacturers. The most basic conditions include keeping dew condensation and static electricity from forming. It is also necessary to keep the room free of dust to ensure a smooth operation of the computer.

(3) Matching the Volume of Air Flow

It is possible to use the fan on the computer to cool the room. This controlling method requires a certain volume of cold air in proportion to the amount of heat produced by the device. The inlet panel is located at the bottom of the unit, and the exhaust pipe is located either on the ceiling, front and back, or on the side.

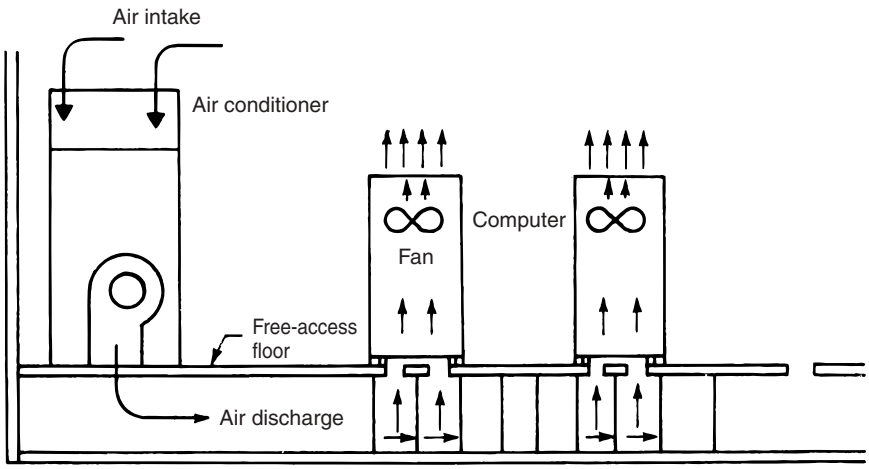

(4) Considering a Back-up Air Conditioning System

When the system is not allowed to stop at all, a back-up system is necessary.
There are several different options for a back-up as the following:

① Installing two sets of air conditioning systems necessary for the computer.
② Utilizing regular office air conditioners (for people)
③ Using one of the units as a back-up

① is used infrequently due to high costs involved. ② involves many technical problems such as the difference between preset conditions for computer rooms and office rooms. In general, ③ is a preferred method. If ③ is chosen, the unit method (package method) is more economical than the central method.

8-5 Setting the Air conditioners

(1) Air-Conditioning Load

① Once the floor plan is made and the conditions for the air-conditioning system are set, air conditioning capacity has to be determined by calculating the load.

② Unlike the outdoor air, computer load remains constant throughout the year. However, it is possible that there are considerable fluctuations within a day. This is due to the fact that, depending on the time of the day, there are changes in the number of computers that are turned on and that the different computer systems are in operation.

③ If there is a plan to expand the current computer system in the future, it is important to include the load for the units to be added in the future when calculating the thermal load because it is practically impossible to keep the computers off for days on end during the installation of the new units.

④ The following items need to be checked before calculating the unit capacity:

- Floor area of the computer room (m^2)
- Total quantity of heat generated by computers

(2) Sample Selection of Air Conditioners

(2-1) Conditions

Computer-generated heat	20.9kW
Number of workers	5
Lighting	20W/m^2
Temperature and humidity	Indoor ˚CDB/Indoor WBT : 24˚C/17˚C ˚CDB of the air going into the computer : 18˚C
Frequency	60Hz

(2-2) Building Conditions

Windows	(W: 4.5m, H: 1.5m) × 2
Inside Measurement	Ceiling height 2.2m
Surroundings	Upstairs room, downstairs room, heat and air conditioning

① Coefficient of Overall Heat Transmission U (W/m^2 ·K)

Outer Walls	Summer 3.6, Winter 3.8
Inner Walls	2.05
Ceiling	Downward convection 3.36, upward convection 3.3
Floor (free access)	Downward convection 3.05, upward convection 4.56
Floor	Downward convection 2.42, upward convection 3.3
Windows	Summer 5.93, Winter 6.5

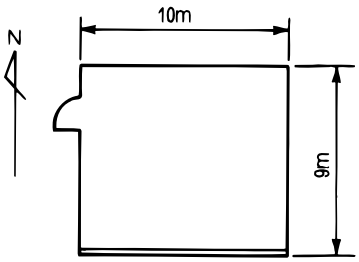

Window

② Internal Load

Number of People in the Room 5

Lighting	20W/m^2
Calculator	20.9kW
Draft	0.2 times/h

③ Volume of Outdoor Air Intake

25m^3/h·person

(2-3) Calculating the Load and Selecting a Model

Calculate the temperature difference by setting the outdoor temperature; then, calculate hourly loads.
The chart shows the result of a calculation, supposing that the system reaches its highest load at 12 o'clock.
Outdoor temperatures in this example Summer : 32˚CDB relative humidity 60%
Winter : -2˚CDB relative humidity 42%

① Load (in the summer with air-conditioning)

< Sensible Heat > SH

Computer		20.9 kW
Lighting	1,800W	1.8 kW
Number of people in the room	5 persons × 64 (U)	0.32 kW
Infiltration draft	(0.2 times/h) 39.6m^3 × 0.336 × 8	0.11 kW
Outer wall (heat transmission)	8.5m^2 × 3.6 × 8	0.25 kW
Windows (radiation)	13.5m^2 × 0.65 × 188	1.91 kW
Windows (heat transmission)	13.5 × 5.93 × 8	0.64 kW
Inner wall(heat transmission)	61.6 × 2.05 × 4	0.5 kW
Outside air	125m^3 × 0.336 × 8	0.34 kW
	Total	26.8 kW

< Latent Heat > LH

Infiltration draft	39.6 × 834 × 0.0117	0.39 kW
Number of people in the room	5 persons × 82	0.41 kW
Outside air	125m^3 × 834 × 0.0117	1.22 kW
	Total	2.0 kW

Total load is 28.8kW

② Necessary Air Circulation

$$V = \frac{26800}{0.336 \times (24 - 18)} \div 60 = 221\text{m}^3/\text{min}$$

③ Model Selection

PUHY-P250YHM-A × 2, PFD-P500VM-E type
Indoor ˚CDB 24˚C / Indoor ˚CWB 17˚C outdoor ˚CDB 32˚C
Capacity of the Moment 54.3kW SHF = 0.92
Capacity of Sensible Heat 54.3 × 0.92 = 49.9/kW
Standard Air-Flow Volume: 320m^3/min can be accommodated with PUHY-P250YHM-A × 2 and PFD-P500VM-E.

8-6 Automatic Control of the Computer Room

Example

PFD-P500VM-E automatically controls the cooling temperature with a built-in controller.
(suction temperature or discharge temperature control)
This unit is designed for high sensible-heat specifications, and it does not include a humidifier or a dehumidifier. Install such components as necessary.

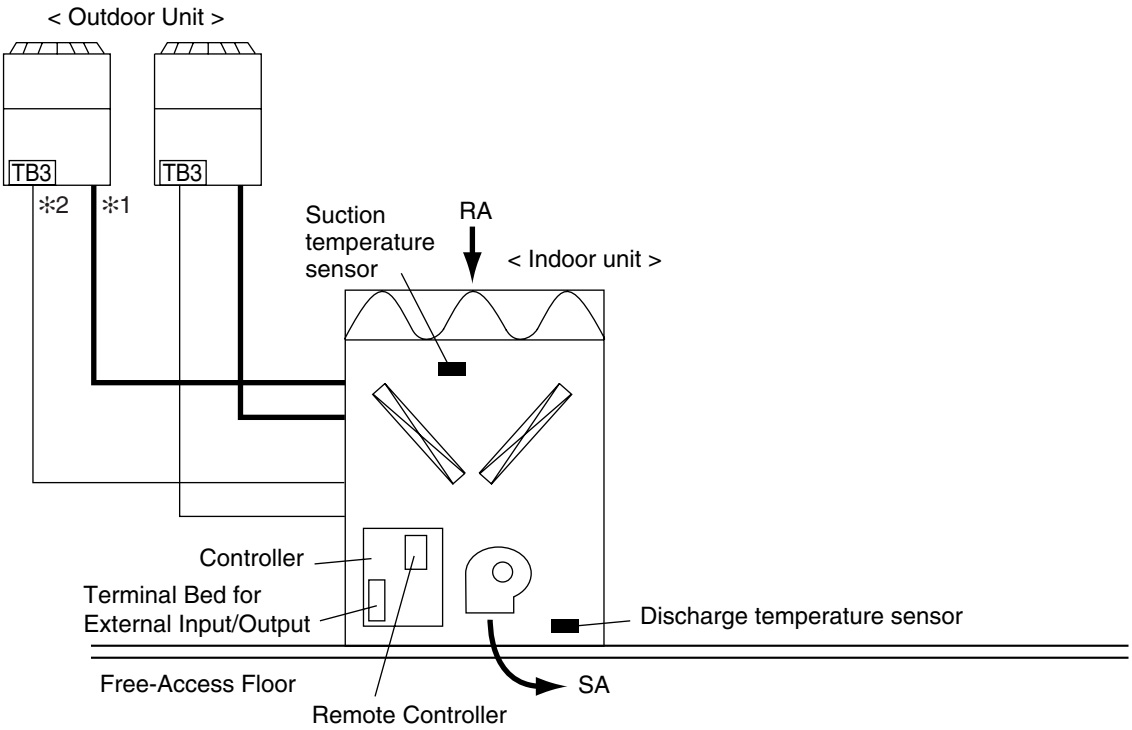

*1 Bold lines in the diagram indicate refrigerant piping (gas/liquid).
This system consists of two refrigerant circuit.

*2 Indicates TB3-type transmission line used to communicate with the indoor unit.
This system is made up of two circuit.

9. Maintenance/Inspection

9-1. Maintenance/Inspection Schedule

Having the units inspected by a specialist on a regular basis, in addition to regular maintenance such as changing the filters, will allow the users to use them safely and in good condition for an extended period of time.
The chart below indicates standard maintenance schedule.

(1) Approximate Long evity of Various Parts

The chart shows an approximate longevity of parts. It is an estimation of the time when old parts may need to be replaced or repairs need to be made.
It does not mean that the parts must absolutely be replaced (except for the fan belt).
Please note that the figures in the chart do not mean warranty periods.

Unit	Parts	Check every	Replace after	Daily check	Periodically check	Remarks
Indoor	Fan Motor	6 months	40000 hours		Yes	
	Bearing	6 months	40000 hours		Yes	Add lubricant once a year
	Fan Belt	6 months	8000 hours		Yes	Disposable parts
	Air Filter	3 months	5 years	Yes		Maintenance schedule changes depending on the local conditions
	Drain Pan	6 months	8 years		Yes	
	Drain Hose	6 months	8 years		Yes	
	Linear Expansion Valve	1 year	25000 hours		Yes	
	Heat Exchanger	1 year	5 years		Yes	
	Float Switch	6 months	25000 hours		Yes	
	Display Lamp (LED)	1year	25000 hours		Yes	
Outdoor	Compressor	6 months	40000 hours		Yes	
	Fan motor	6 months	40000 hours		Yes	
	Linear Expansion Valve	1 year	25000 hours		Yes	
	4-way valve	1 year	25000 hours		Yes	
	Heat Exchanger	1 year	5 years		Yes	
	Pressure Switch	1 year	25000 hours		Yes	

(2) Notes

- The above chart shows a maintenance schedule for a unit that is used under the following conditions:
  A. Less than 6 times per hour of compressor stoppage
  B. The unit stays on 24 hours a day.

- Shortening the inspection cycle may need to be considered when the following conditions apply:
  ① When used in high temperature/high humidity area or when used in a place where the temperature and/or humidity fluctuate greatly
  ② When plugged into an unstable power source (sudden change in voltage, frequency, wave distortions) (Do not exceed the maximum capacity.)
  ③ When the unit is installed in a place where it receives vibrations or major impacts.
  ④ When used in a place with poor air quality (containing dust particles, salt, poisonous gas such as sulfuric acid gas and sulfuric hydrogen gas, oil mist).

- Even when the above maintenance schedule is followed, there could be unexpected problems that cannot be predicted.

- Holding of Parts
  We will hold parts for the units for at least 9 years after the termination of the production of the unit, following the standards set by the ministry of economics and industries.

(3) Details of Maintenance/Inspection

Unit	Parts	Inspection Cycle	Check points	Assessment	What to do
Indoor	Fan motor	6 months	· Check for unusual noise · Measure the insulation resistance	· Free of unusual noise · Insulation resistance over 1MΩ	Replace when insulation resistance is under 1MΩ
	Bearing		· Check for unusual noise	· Free of unusual noise	If the noise doesn't stop after lubrication, change the oil. Add lubricant once a year.
	Fan belt		· Check for excessive slack · Check for wear and tear · Check for unusual noise	· Resistance (30~40N/belt) · Adequate amount of slack=5mm · Belt length=no longer than 102% of the original length · Free of wear and tear · Free of unusual noise	Adjust the belt Replace if the belt length exceeds 2% of the original length, worn, or used over 8000 hours
	Air filter	3 months	· Check for clogging and tear · Clean the filter	· Clean, free of damage	Clean the filter Replace if extremely dirty or damaged
	Drain pan	6 months	· Check for clogging of the drainage system · Check for loosened bolts · Check for corrosion	· Clean, free of clogging · Free of loose screws · No major disintegration	Clean if dirty or clogged Tighten bolts Replace if extremely worn
	Drain hose		· Check for clogging of the drainage system · Check for corrosion · Check the drainage of the drain trap	· Clean, free of clogging · Free of wear and tear	Clean if dirty or clogged Replace if extremely worm Pour water into the drain trap
	Linear expansion valve	1 year	· Perform an operation check using the operation data	· Adequately controls the air temperature	Replace if malfunctioning
	Heat exchanger		· Check for clogging, dirt, and damage	· Clean, free of clogging or damage	Clean
	Float switch	6 months	· Check the outer appearance · Make sure its free of foreign objects	· Free of frayed or cut wires · Free of foreign objects	Replace if damaged or extremely worn Remove foreign objects
	Display lamp (LED)	1 year	· Make sure the lamp comes on	· Comes on when the output is on · Rapid drop in brightness	Replace if the light does not come on when the power is on
Outdoor	Compressor	6 months	· Check for unusual noise · Check insulation resistance · Check for loosened terminals	· Free of unusual sound · Insulation resistance over 1MΩ · Free of loosened terminals	Replace if insulation resistance goes below 1MΩ (under the condition that the refrigerant is not liquefied) Tighten loosened bolts
	Fan motor		· Check for unusual noise · Measure insulation resistance	· Free of unusual sound · Insulation resistance over 1MΩ	Replace if insulation resistance goes below 1MΩ
	Linear expansion valve	1 year	· Perform an operation check using the operation data	· Adequately controls the air temperature	Replace if malfunctioning
	4-way valve		· Perform an operation check using the operation data	· Adequately controls the refrigerant temperature when the valve is switched (Check temperature change when cooling/heating is switched.)	Replace if malfunctioning
	Heat exchanger		· Check for clogging, dirt, and damage	· Clean, free of clogging or damage	Clean
	Pressure switch		· Check for torn wire, fraying, and unplugged connectors · Check insulation resistance	· No frayed or cut wires or unplugged connectors · Insulation resistance over 1MΩ	Replace when cut or shorted, when the insulation resistance goes below 1MΩ, or if there is a history of abnormal operation

DATA BOOK PUHY-P250YHM-A
PFD-P250VM-E
PFD-P500VM-E

MITSUBISHI ELECTRIC CORPORATION
HEAD OFFICE: TOKYO BLDG., 2-7-3, MARUNOUCHI, CHIYODA-KU, TOKYO 100-8310, JAPAN

Issued in June 2008 MEE07K622
Printed in Japan

New publication effective June 2008.
Specifications subject to change without notice.