MITSUBISHI ELECTRIC

AIR-COOLED ROOFTOP PACKAGED AIR CONDITIONERS

Series

**COOLING ONLY :PR-5, 8, 10, 15, 20**

**HEAT PUMP :PRH-5, 8, 10, 15, 20**
**PRH-5, 8, 10, 15, 20-L**

# DATA BOOK

# CONTENTS



Specifications subject to change without notice.

# SAFETY FOR USE

Before conducting installation work, please read this "SAFETY FOR USE" carefully for correct installation.
Since the caution items shown here contain important description relative to safety, please observe them without fail.

| | |
|---|---|
| ⚠ Warning | Erroneous handling gives a high possibility to induce serious results such as death or heavy injury. |
| ⚠ Caution | Erroneous handling may induce serious injury depending on the situation. |

After reading, please keep it with you together the Instruction Manual, and read it again at the movement of the unit.

## ⚠ Warning

**The unit should not be installed by the user.**
If the unit is installed improperly, explosion, water leakage, electric shock or fire may be result.
Consult your dealer or specialist subcontractor for repair and movement.

**For installation, conduct the work correctly by following the Installation Manual.**
Improper installation may cause a fire, electrical shock or water leakage.

**Install the unit on a spot sufficiently durable against the unit weight.**
Insufficient durability can cause an injury by the falling down of unit.

**All electric work must be performed by licensed technician, according to local regulations and the instructions given in this manual.**
The units should be powered by dedicated power lines. Power lines with insufficient capacity or improper electrical work may result in electric shock or fire.

**Use only the specified cables for wiring.**
**The connections must be made secured without tension the terminals.**
Improper connection or fastening can cause a fire or electrical shock.

**The unit should be installed according to the instructions in order to minimize the risk of damage from earthquakes, typhoons or strong winds.**
Improper installation work can cause an injury by the falling down of the unit.

**The unit must be installed on stable, flat surface, in a place where there is no accumulation of snow, leaves or rubbish.**

**The unit should be installed in a location where air and noise emitted by the unit will not disturb the neighbors.**
If the unit is loosely mounted, it may fall, and cause injury.

**Never repair the unit, remodel or transfer it to another site by yourself.**
If they are performed improperly, water leakage, electric shock or fire may result. If you need to have the unit repaired or moved, consult your dealer.

**Use only the specified refrigerant (R-22) to charge the refrigerant circuit.**
Do not mix it with any other refrigerant and do not allow air to remain in the circuit.
Air enclosed in the circuit can cause high pressure resulting in a rupture and other hazards.

**After completing installation work, make sure that refrigerant gas has not leaked.**
If refrigerant gas has leaked and exposed to fan heater, stove, oven and so on, it may generate noxious gases.

**Take a proper measure to suppress the critical concentration of refrigerant if leaked when installing the unit in a small room.**
The limit density is made not to be exceeded even if the refrigerant leaks by any chance.
You are necessary to ventilation measures to prevent the accident. If the refrigerant leaks, hypoxia accident may caused.
For the countermeasure to be taken, consult your dealer.

**The terminal block cover of unit must be firmly attached to prevent entry of dust and moisture.**
Improper mounting of the cover cause electric shock or fire.

**Use only optional parts authorised by Mitsubishi Electric.**
If the accessories are installed improperly, water leakage, electric shock or fire may result.
Ask your dealer or an authorised company to install them.

## ⚠Caution

**Refrain from installing the unit in an area where flammable gas can accumulate around the unit.**
If the flammable gas can accumulate around the unit, an explosion can occur.

**When the unit is installed at telecommunication centers or hospitals, take a proper provision against noise.**
The erroneous operation of air conditioner may be induced by inverter equipment, independent power device, medical equipment or communication equipment.
While the erroneous operation of medical equipment or communication equipment may caused by the air conditioner.

**For special use as for foods, animals/plants, precision equipment or art objects, the applicability should be confirmed beforehand.**
As the use for the applications other than that designed originally may result in the deterioration of the quality. Consult your dealer in this regard.

**Do not use the unit under a special atmosphere.**
Installing the unit at the following places may cause a trouble, a place where much machine oil, salt sonnet, humidity or dust, spa district, a place full of sulfur gas, volatile gas, or corrosive gas, a place near high frequency processing machine.

**Thermal insulation of the drain pipes is necessary prevent dew condensation.**
If the drain pipes are not properly insulated, condensation will result and drip on ceiling, floor or other possessions.

**The drain piping must process by surely,and insulate the drain piping not to be dewy.**
When the room humidity exceeds 80% or when the drain pipe is clogged, water may drip from the indoor unit. The outdoor unit produces condensation during the heating operation.
Make sure to provide drainage around the outdoor unit if such condensation is likely to cause damage.

**Install drain piping according to this Installation Manual to ensure proper drainage.**
**Place thermal insulation on the pipes to prevent condensation.**
Improper drain piping may cause water leakage and damage to furniture or other possessions.

**The unit must be properly earth connected.**
Do not connect the earth wire to gas pipe, city water pipe, lightning rod or telephone earth wire.
Improper earth connection may cause electrical shock.

**When installing at a watery place, provide an electric leak breaker.**
Failure to mount the electric leak breaker may cause electrical shock.

**Use breaker or fuse with proper capacity.**
**Make sure that there is a main power switch.**
Using a wire or a copper wire instead of proper capacity of fuse can cause fire or trouble.
Other appliances connected to the same line could cause an overload.

**For the power lines, use standard cables of sufficient current capacity.**
Otherwise, current leakage, overheating or fire may occur.

**When installing the power lines, do not apply tension to the cables.**
The tighten or loosen the connections may cause generate heat and cause fire.

**Arrange the configuration of wiring not to bring up the panel and terminal cover, and fasten the panel and terminal cover securely.**
The poor mounting of the panel or terminal cover may cause the heat generation of the terminal connection, a fire or electrical shock.

**Do not wash the unit with water.**
If washed with water, electrical shock may be caused.

**Do not handle the switch with wet hands.**
Otherwise electrical shock can be resulted.

**Be very careful on handling the unit.**
When carrying in outdoor unit, be sure to support it at four points.
Carrying in and lifting with 3-point support may make outdoor unit unstable, resulting in a fall of it.
The unit should not be carried by only one person if it is more than 20kg.
Some units use PP bands for packing.
Do not use any PP band for delivery purpose.
Do not touch the heat exchanger fins with your bear hands.
Doing so may cut your hands.
Be sure to safely dispose the packaging materials.
Packaging materials, such as catches and other metal or wooden parts, may cause stabs or other injuries.
Tear off and discard plastic packing bags so that children will not play any of them.
If children play with a plastic bag which was not torn off, it may cause a risk of suffocation.

**The base and attachments of the unit should be periodically checked for looseness, cracks or other damage.**
If such defects are left uncorrected, the unit may fall and cause personal injury or property damage.

**Turn on the main power switch more than 6 hours before starting operation.**
Do not turn the main power switch OFF during seasons of heavy use, doing so can result In failure.

**Do not touch the compressor or refrigerant piping without wearing glove on your hands.**
Touching directly such part can cause a burn or frostbite as it becomes high or low temperature according to the refrigerant state.

**Do not touch the metal edges inside the unit without wearing glove on your hands.**
Touching directly it may injure your hands.

**Do not remove the front panel or the fan guard from the unit when it is running.**
You could be injured if you touch rotating, hot or high-voltage parts.

**Do not operate the air conditioner without the air filter set place.**
Dust may accumulate, and cause a failure.

**At emergency (if you smell something burning), stop operation and turn the power source switch off.**
Continuing the operation without eliminating the emergency state may cause a machine trouble, fire, or electrical shock.

**After stopping operation, be sure to wait for five minutes before turning off the main power switch.**
Otherwise, water leakage or unit failure may occur.

# A COMPLETE LINE UP

**PR-5YC$_1$**
**PRH-5YA$_1$**
**PRH-5YA$_1$-L**

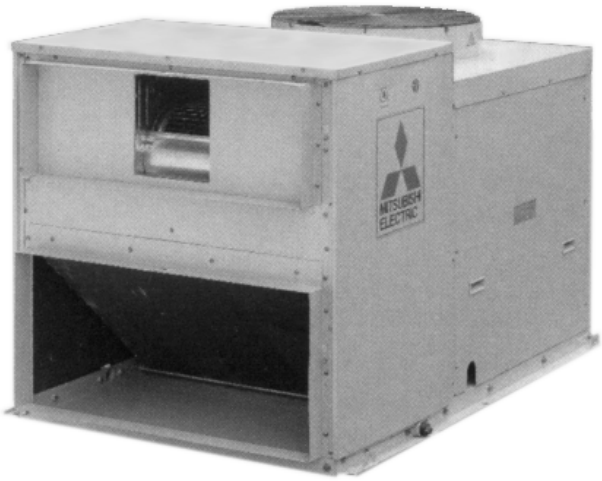

| Cooling capacity | (PRH ONLY) Heatling capacity |
|---|---|
| 14,000 kcal/h | 13,000 kcal/h |
| 55,600 BTU/h | 51,600 BTU/h |
| 16.3 kW | 15.1 kW |

**PR-8YC$_1$**
**PRH-8YA$_1$**
**PRH-8YA$_1$-L**

| Cooling capacity | (PRH ONLY) Heatling capacity |
|---|---|
| 20,500 kcal/h | 19,800 kcal/h |
| 81,300 BTU/h | 78,600 BTU/h |
| 23.8 kW | 23 kW |

**PR-10YC$_1$**
**PRH-10YA$_1$**
**PRH-10YA$_1$-L**

| Cooling capacity | (PRH ONLY) Heatling capacity |
|---|---|
| 25,500 kcal/h | 27,500 kcal/h |
| 101,200 BTU/h | 109,100 BTU/h |
| 29.7 kW | 32 kW |

**PR-15YC$_1$**
**PRH-15YA$_1$**
**PRH-15YA$_1$-L**

| Cooling capacity | (PRH ONLY) Heatling capacity |
|---|---|
| 39,800 kcal/h | 39,100 kcal/h |
| 157,900 BTU/h | 155,100 BTU/h |
| 46.3 kW | 45.5 kW |

**PR-20YC$_1$**
**PRH-20YA$_1$**
**PRH-20YA$_1$-L**

| Cooling capacity | (PRH ONLY) Heatling capacity |
|---|---|
| 52,300 kcal/h | 52,600 kcal/h |
| 207,500 BTU/h | 208,700 BTU/h |
| 60.8 kW | 61.2 kW |

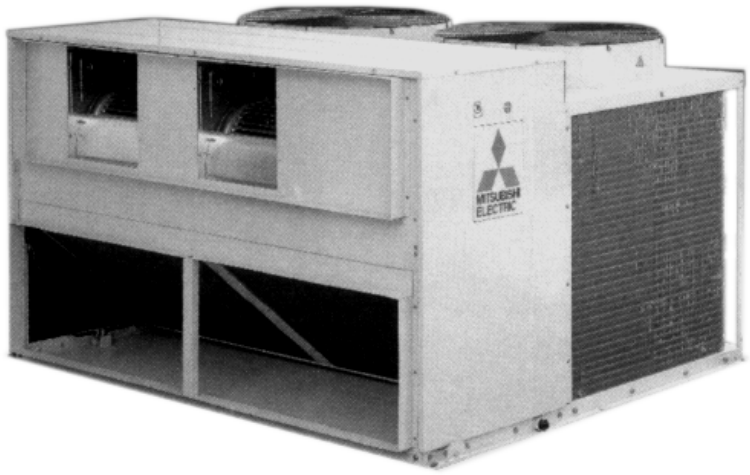

# FEATURES

## High Sensible Cooling Capacity

The sensible cooling capacity has been significantly improved through optimized heat exchanger design.

## Comfort Heating

The PRH series are designed to provide effective heating even when the outside temperature is down to 0˚C. The PRH-L series are designed to provide effective heating even when the outside temperature is down to -10˚C. In addition, the twin circuit models, PRH-15,20YA1, PRH-15,20YA1-L are provided with control features that prevents both refrigeration circuits defrosting at the same time. This ensures constant comfort conditions during defrost and varying loads.

## Highly Efficient Operation

The EER (Energy Efficiency Ratio) on these models is greatly improved by revised design specifications and by being manufactured stringently to Mitsubishi Electric high quality standards.

## Flexibility of Supply Air Delivery

All series feature belt driven Supply Air fans enabling accurate matching of actual airflow rates to the specified quantities. Accurate commissioning is assisted by the capability to exchange pulleys and belts if necessary to achieve the desired air balance.

## Labor Saving Installation

Because of the single unit configuration, all refrigeration work can be omitted. The unit operation can commence immediately after connection to the power supply, drain piping, ducting and control system.

## Low Ambient Cooling

In applications with relatively high internal loads, there may be a requirement for all series to operate on cooling at low ambient conditions. An optional accessory is available to maintain the refrigeration circuit in balance at outdoor temperatures as low as 0˚C (PRH only). In case of PR,PRH-L is -5˚C.
Please consult your local Mitsubishi Electric Sales office for application advice on this accessory.

## Wide Electrical Control Capability

All series is flexible mechanical control configuration.
In addition Global Remote Controller is prepared as special order.
The Global Remote Controller gives the programmable weekly timer, compressor anti-short cycle timer (3min.), cool/heat/fan/auto changeover etc. (Heat and auto changeover are only PRH(L).)
The factory standard is for provision of 24 volt terminal block to enable a field wired control of contractors choice to be connected.
Please consult your local Mitsubishi Electric Sales office for application advice on these control.

Grobal Remote Controller

# DESCRIPTIONS

MITSUBISHI ELECTRIC Rooftop Air Conditioners Series PR,PRH,PRH-L are available in a wide range of sizes and models to enable the designer to select the best model for each application.
The complete range has been designed for outdoor installation, and the units are provided with the latest technological features to ensure economical, reliable and comfortable ducted type air conditioning.
All series units are completely assembled, wired and strictly tested at the factory. They consist of a compressors, air-cooled condensers, evaporator fans, condenser fans and auxiliary and control equipment, completely packaged in a water-proof enclosure.
With the development of all series demands for such features as light weight, compactness, increased capacity, appropriate static pressure, air flow control, and having flexibility of inter-facing energy saving electronic controls Mitsubishi Electric have met market expectations.

# MECHANICAL SPECIFICATIONS

## General

All units are factory assembled, piped, internally wired and fully charged with R-22. They are also tested and checked under a strict quality control system in the factory. All units are designed for outdoor rooftop or ground level installation. Exterior surfaces of all units are phosphatized, zinc-coated steel with acrylic resin primer and ivory white baked enamel finish.

## Refrigeration Controls

Refrigeration controls include condenser fan, evaporator fan and compressor contactor. Each circuit of the unit has a separate set of refrigeration controls. PR, PRH, PRH-L-15, 20 units have two independent circuits.

## Compressors

All units have high efficiency type hermetic line starting compressors. Compressors are equipped with thermal overload protector, overcurrent relay and high pressure protection controls. Crankcase heaters are standard.

## Evaporator Coils

Highly efficient cross-finned coils are applied to provide a larger cooling capacity with low air speed on the coil. Coils are made of 9.52mm OD and 0.35mm thick seamless copper tubing mechanically bonded to 0.12mm thick aluminium fins and are factory leak tested at a pressure of 3.3MPa. They are provided with strainers attached to the capillary tubes to further ensure a clean system.

## Condenser Coils

Unnecessary power input due to higher discharge pressure is avoided by high performance designs of cross-finned coils. Condenser coils are made of 9.52mm OD, 0.35mm thick seamless copper tubes mechanically bonded to 0.12mm thick aluminium plate fins. Each coil is factory pressure and leak tested at 3.3MPa.

## Evaporator Fans

Belt-drive, forward curved, centrifugal type fans made of galvanized steel are used to deliver an accurate airflow at low noise level.

## Condenser Fan

This direct-drive propeller fan is dynamically balanced, to ensure smooth airflow. A weather-proof three-phase squirrel cage induction motor is used to drive the condenser fan.

# TYPICAL INSTALLATION EXAMPLE

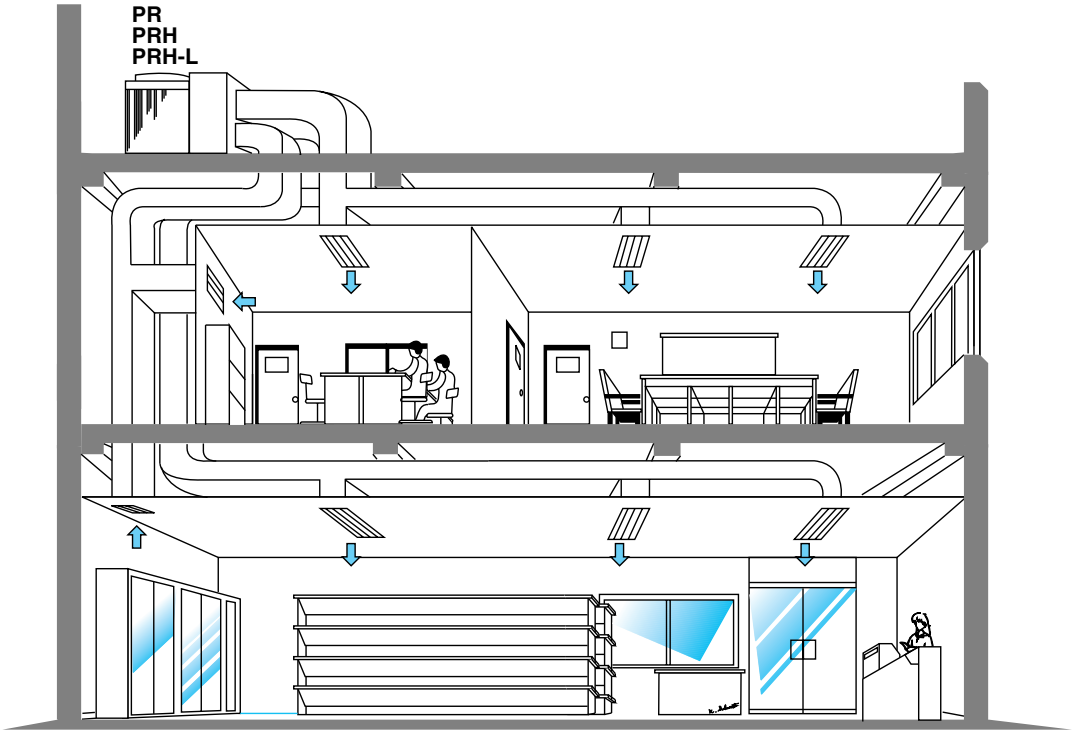

# SPECIFICATIONS

| ITEM | | | PR-5YC1<br>PRH-5YA1<br>PRH-5YA1-L | PR-8YC1<br>PRH-8YA1<br>PRH-8YA1-L | PR-10YC1<br>PRH-10YA1<br>PRH-10YA1-L | PR-15YC1<br>PRH-15YA1<br>PRH-15YA1-L | PR-20YC1<br>PRH-20YA1<br>PRH-20YA1-L |
|---|---|---|---|---|---|---|---|
| TOTAL COOLING CAPACITY (GROSS) | | kW | 16.3 | 23.8 | 29.7 | 46.3 | 60.8 |
| | | BTU/h | 55,600 | 81,300 | 101,200 | 157,900 | 207,500 |
| | | kcal/h | 14,000 | 20,500 | 25,500 | 39,800 | 52,300 |
| SENSIBLE COOLING CAPACITY (GROSS) | | kW | 13 | 19.7 | 25.3 | 38.4 | 50.2 |
| | | BTU/h | 44,400 | 67,100 | 86,500 | 130,900 | 171,400 |
| | | kcal/h | 11,200 | 16,900 | 21,800 | 33,000 | 43,200 |
| TOTAL HEATING CAPACITY (GROSS) (PRH-YA,PRH-YA-L ONLY) | | kW | 15.1 | 23 | 32 | 45.5 | 61.2 |
| | | BTU/h | 51,600 | 78,600 | 109,100 | 155,100 | 208,700 |
| | | kcal/h | 13,000 | 19,800 | 27,500 | 39,100 | 52,600 |
| CAPACITY STEPS | | % | 0-100 | | | 0-50-100 | |
| REFRIGERANT | | | R22 (FACTORY CHARGED) | | | | |
| REFRIGERANT CONTROL | | | CAPILLARY TUBE | | | | |
| EXTERNAR FINISH | | | ACRYLIC RESIN COATING | | | | |
| COLOR (MUNSELL NO.) | | | MUNSELL 5Y8/1 | | | | |
| DIMENSION | HEIGHT | mm | 1,000 | | | 1,200 | |
| | WIDTH | mm | 1,000 | 1,300 | | 1,990 | |
| | DEPTH | mm | 1,600 | | | 1,840 | |
| NET WEIGHT | | kg | 299 | 393 | 413 | 698 | 729 |
| COMPRESSOR | | | HERMETIC LINE START (RECIPROCATING) | | | | |
| MOTOR OUTPUT | | kW | 3.73 | 5.6 | 7.5 | 2 × 5.6 | 2 × 7.5 |
| INDOOR COIL | | | CROSS FIN COIL | | | | |
| FAN | | | CENTRIFUGAL (GALVANIZED STEEL) - BELT DRIVE | | | | |
| FAN MOTOR | | | THREE PHASE CAGE INDUCTION MOTOR | | | | |
| FAN MOTOR OUTPUT | | kW | 0.75 | 1.1 | 1.5 | 2.2 | 3 |
| NOMINAL AIR FLOW | | CMM | 54 | 84 | 100 | 168 | 190 |
| | | CFM | 1,907 | 2,967 | 3,532 | 5,934 | 6,711 |
| | | L/S | 900 | 1,400 | 1,660 | 2,800 | 3,160 |
| EXTERNAL STATIC PRESSURE | | mmAq | 10 | 10 | 10 | 20 | 20 |
| | | Pa | 100 | 100 | 100 | 200 | 200 |
| OUTDOOR COIL | | | CROSS FIN COIL | | | | |
| FAN | | | PROPELLER - DIRECT DRIVE | | | | |
| FAN MOTOR | | | THREE PHASE CAGE INDUCTION MOTOR | | | | |
| FAN MOTOR OUTPUT | | kW | 0.15 | 0.35 | 0.35 | 2 × 0.35 | 2 × 0.35 |
| NOMINAL AIR FLOW | | CMM | 95 | 185 | 185 | 2 × 185 | 2 × 185 |
| | | CFM | 3,355 | 6,534 | 6,534 | 2 × 6,534 | 2 × 6,534 |
| | | L/S | 1,583 | 3,083 | 3,083 | 2 × 3,083 | 2 × 3,083 |
| DRAIN CONNECTION | | mm | 25.4 | | | | |
| PROTECTION DEVICES | | | HIGH PRESSURE SWITCH, FUSE<br>OVER CURRENT RELAY (COMP. & INDOOR FAN,OUTDOOR FAN)<br>INTERNAL THERMOSTAT (COMP. & OUTDOOR FAN)<br>ANTI SHORT-CYCLE TIMER, FREEZE & FROST PROTECTOR | | | | |

NOTE 1. NOMINAL COOLING & HEATING CAPACITIES ARE BASED FOLLOWING CONDITIONS.
COOLING: INDOOR:27˚C DB, 19˚C WB ; OUTDOOR:35˚C DB.
HEATING: INDOOR:21˚C DB ; OUTDOOR:7 DB, 6˚C WB.
2. CAPACITIES ARE GROSS CAPACITIES WHICH DO NOT INCLUDE A DEDUCTION FOR EVAPORATOR FAN MOTOR HEAT.

# ELECTRICAL DATA

## Cooling

| VOLT | ITEM | | PR-5YC1<br>PRH-5YA1<br>PRH-5YA1-L | PR-8YC1<br>PRH-8YA1<br>PRH-8YA1-L | PR-10YC1<br>PRH-10YA1<br>PRH-10YA1-L | PR-15YC1<br>PRH-15YA1<br>PRH-15YA1-L | PR-20YC1<br>PRH-20YA1<br>PRH-20YA1-L |
|---|---|---|---|---|---|---|---|
| 415V | TOTAL INPUT | kW | 5.4 | 8.3 | 11.4 | 16.8 | 22.7 |
| | TOTAL RUN CURRENT | A | 10.3 | 15.9 | 20.2 | 30.8 | 39.1 |
| | POWER FACTOR | % | 73 | 73 | 79 | 76 | 81 |
| | START CURRENT | A | 62 | 87 | 100 | 115 | 135 |
| | COMPRESSOR INPUT | kW | 3.92 | 6.46 | 9.22 | 2 × 6.55 | 2 × 9.30 |
| | RUN CURRENT | A | 7.44 | 11.70 | 15.62 | 2 × 11.74 | 2 × 15.22 |
| | I/D FAN INPUT | kW | 1.24 | 1.30 | 1.64 | 2.62 | 3.02 |
| | RUN CURRENT | A | 2.26 | 2.90 | 3.28 | 4.72 | 6.06 |
| | O/D FAN INPUT | kW | 0.24 | 0.54 | 0.54 | 2 × 0.54 | 2 × 0.54 |
| | RUN CURRENT | A | 0.6 | 1.3 | 1.3 | 2 × 1.3 | 2 × 1.3 |
| 380V | TOTAL INPUT | kW | 5.4 | 8.3 | 11.4 | 16.8 | 22.7 |
| | TOTAL RUN CURRENT | A | 11.2 | 17.3 | 21.9 | 33.6 | 42.6 |
| | POWER FACTOR | % | 73 | 73 | 79 | 76 | 81 |
| | START CURRENT | A | 68 | 95 | 109 | 126 | 147 |
| | COMPRESSOR INPUT | kW | 3.92 | 6.46 | 9.22 | 2 × 6.55 | 2 × 9.30 |
| | RUN CURRENT | A | 8.06 | 12.71 | 16.90 | 2 × 12.80 | 2 × 16.57 |
| | I/D FAN INPUT | kW | 1.24 | 1.30 | 1.64 | 2.62 | 3.02 |
| | RUN CURRENT | A | 2.48 | 3.17 | 3.58 | 5.16 | 6.62 |
| | O/D FAN INPUT | kW | 0.24 | 0.54 | 0.54 | 2 × 0.54 | 2 × 0.54 |
| | RUN CURRENT | A | 0.66 | 1.42 | 1.42 | 2 × 1.42 | 2 × 1.42 |

## Heating (PRH,PRH-L Only)

| VOLT | ITEM | | PRH-5YA1<br>PRH-5YA1-L | PRH-8YA1<br>PRH-8YA1-L | PRH-10YA1<br>PRH-10YA1-L | PRH-15YA1<br>PRH-15YA1-L | PRH-20YA1<br>PRH-20YA1-L |
|---|---|---|---|---|---|---|---|
| 415V | TOTAL INPUT | kW | 4.8 | 7.0 | 9.6 | 14.4 | 19.3 |
| | TOTAL RUN CURRENT | A | 9.8 | 14.1 | 18.2 | 27.2 | 34.8 |
| | POWER FACTOR | % | 68 | 69 | 73 | 74 | 77 |
| | START CURRENT | A | 62 | 87 | 100 | 111 | 131 |
| | COMPRESSOR INPUT | kW | 3.32 | 5.16 | 7.42 | 2 × 5.35 | 2 × 7.60 |
| | RUN CURRENT | A | 6.94 | 9.90 | 13.62 | 2 × 9.94 | 2 × 13.07 |
| | I/D FAN INPUT | kW | 1.24 | 1.30 | 1.64 | 2.62 | 3.02 |
| | RUN CURRENT | A | 2.26 | 2.90 | 3.28 | 4.72 | 6.06 |
| | O/D FAN INPUT | kW | 0.24 | 0.54 | 0.54 | 2 × 0.54 | 2 × 0.54 |
| | RUN CURRENT | A | 0.6 | 1.3 | 1.3 | 2 × 1.3 | 2 × 1.3 |
| 380V | TOTAL INPUT | kW | 4.8 | 7.0 | 9.6 | 14.4 | 19.3 |
| | TOTAL RUN CURRENT | A | 10.7 | 15.4 | 20.0 | 29.6 | 38.1 |
| | POWER FACTOR | % | 68 | 69 | 73 | 74 | 77 |
| | START CURRENT | A | 68 | 95 | 109 | 121 | 143 |
| | COMPRESSOR INPUT | kW | 3.32 | 5.16 | 7.42 | 2 × 5.35 | 2 × 7.60 |
| | RUN CURRENT | A | 7.56 | 10.81 | 15.00 | 2 × 10.8 | 2 × 14.32 |
| | I/D FAN INPUT | kW | 1.24 | 1.30 | 1.64 | 2.62 | 3.02 |
| | RUN CURRENT | A | 2.48 | 3.17 | 3.58 | 5.16 | 6.62 |
| | O/D FAN INPUT | kW | 0.24 | 0.54 | 0.54 | 2 × 0.54 | 2 × 0.54 |
| | RUN CURRENT | A | 0.66 | 1.42 | 1.42 | 2 × 1.42 | 2 × 1.42 |

## Cooling Capacity (Nominal Air Flow): PR-5YC$_1$, PRH-5YA$_1$, PRH-5YA$_1$-L

OPERATION RANGE: PR-5YC$_1$ / PRH-5YA$_1$-L / PRH-5YA$_1$

| INDOOR | INDOOR | OUTDOOR DB °C | | | | | | | | | | | | | | | | | | | | | | | |
|---|---|---|---|---|---|---|---|---|---|---|---|---|---|---|---|---|---|---|---|---|---|---|---|---|---|
| | | 20.0 | | | | 25.0 | | | | 30.0 | | | | 35.0 | | | | 40.0 | | | | 46.0 | | | |
| DB°C | WB°C | Q kW | SHCkW | SHF | T/I kW | Q kW | SHCkW | SHF | T/I kW | Q kW | SHCkW | SHF | T/I kW | Q kW | SHCkW | SHF | T/I kW | Q kW | SHCkW | SHF | T/I kW | Q kW | SHCkW | SHF | T/I kW |
| 20 | 15 | 16.4 | 11.3 | 0.69 | 4.5 | 15.8 | 11.1 | 0.70 | 4.7 | 15.2 | 10.8 | 0.71 | 4.9 | 14.5 | 10.4 | 0.72 | 5.1 | 13.8 | 10.1 | 0.73 | 5.4 | 13.0 | 9.8 | 0.75 | 5.7 |
| | 16 | 16.9 | 10.3 | 0.61 | 4.6 | 16.3 | 10.1 | 0.62 | 4.8 | 15.6 | 9.8 | 0.63 | 5.0 | 15.0 | 9.6 | 0.64 | 5.2 | 14.2 | 9.2 | 0.65 | 5.5 | 13.3 | 8.9 | 0.67 | 5.8 |
| | 17 | 17.4 | 9.4 | 0.54 | 4.6 | 16.8 | 9.1 | 0.54 | 4.8 | 16.1 | 8.9 | 0.55 | 5.0 | 15.4 | 8.5 | 0.55 | 5.3 | 14.7 | 8.2 | 0.56 | 5.5 | 13.7 | 7.8 | 0.57 | 5.8 |
| 22 | 15 | 16.4 | 13.1 | 0.80 | 4.5 | 15.8 | 12.8 | 0.81 | 4.7 | 15.2 | 12.5 | 0.82 | 4.9 | 14.5 | 12.2 | 0.84 | 5.1 | 13.8 | 11.9 | 0.86 | 5.4 | 13.0 | 11.6 | 0.89 | 5.7 |
| | 16 | 16.9 | 12.2 | 0.72 | 4.6 | 16.3 | 11.9 | 0.73 | 4.8 | 15.6 | 11.5 | 0.74 | 5.0 | 15.0 | 11.4 | 0.76 | 5.2 | 14.2 | 11.1 | 0.78 | 5.5 | 13.3 | 10.6 | 0.80 | 5.8 |
| | 17 | 17.4 | 11.1 | 0.64 | 4.6 | 16.8 | 10.9 | 0.65 | 4.8 | 16.1 | 10.6 | 0.66 | 5.0 | 15.4 | 10.3 | 0.67 | 5.3 | 14.7 | 10.1 | 0.69 | 5.5 | 13.7 | 9.7 | 0.71 | 5.8 |
| | 18 | 17.9 | 10.2 | 0.57 | 4.7 | 17.3 | 10.0 | 0.58 | 4.9 | 16.6 | 9.8 | 0.59 | 5.1 | 15.9 | 9.4 | 0.59 | 5.3 | 15.1 | 9.1 | 0.60 | 5.6 | 14.2 | 8.8 | 0.62 | 5.9 |
| | 19 | 18.5 | 9.4 | 0.51 | 4.7 | 17.8 | 9.1 | 0.51 | 4.9 | 17.1 | 8.9 | 0.52 | 5.2 | 16.3 | 8.5 | 0.52 | 5.4 | 15.6 | 8.3 | 0.53 | 5.7 | 14.6 | 7.9 | 0.54 | 6.0 |
| 24 | 16 | 16.9 | 14.0 | 0.83 | 4.6 | 16.3 | 13.7 | 0.84 | 4.8 | 15.6 | 13.4 | 0.86 | 5.0 | 15.0 | 13.2 | 0.88 | 5.2 | 14.2 | 12.8 | 0.90 | 5.5 | 13.3 | 12.5 | 0.94 | 5.8 |
| | 17 | 17.4 | 13.1 | 0.75 | 4.6 | 16.8 | 12.8 | 0.76 | 4.8 | 16.1 | 12.4 | 0.77 | 5.0 | 15.4 | 12.2 | 0.79 | 5.3 | 14.7 | 11.9 | 0.81 | 5.5 | 13.7 | 11.5 | 0.84 | 5.8 |
| | 18 | 17.9 | 12.2 | 0.68 | 4.7 | 17.3 | 11.9 | 0.69 | 4.9 | 16.6 | 11.6 | 0.70 | 5.1 | 15.9 | 11.3 | 0.71 | 5.3 | 15.1 | 11.0 | 0.73 | 5.6 | 14.2 | 10.7 | 0.75 | 5.9 |
| | 19 | 18.5 | 11.1 | 0.60 | 4.7 | 17.8 | 10.9 | 0.61 | 4.9 | 17.1 | 10.6 | 0.62 | 5.2 | 16.3 | 10.3 | 0.63 | 5.4 | 15.6 | 10.0 | 0.64 | 5.7 | 14.6 | 9.6 | 0.66 | 6.0 |
| | 20 | 19.0 | 10.1 | 0.53 | 4.8 | 18.3 | 9.7 | 0.53 | 5.0 | 17.6 | 9.5 | 0.54 | 5.2 | 16.8 | 9.2 | 0.55 | 5.5 | 16.0 | 9.0 | 0.56 | 5.8 | 15.0 | 8.6 | 0.57 | 6.1 |
| | 21 | 19.5 | 9.2 | 0.47 | 4.8 | 18.8 | 8.8 | 0.47 | 5.1 | 18.0 | 8.6 | 0.48 | 5.3 | 17.3 | 8.5 | 0.49 | 5.6 | 16.4 | 8.2 | 0.50 | 5.9 | 15.4 | 7.9 | 0.51 | 6.2 |
| 26 | 18 | 17.9 | 14.0 | 0.78 | 4.7 | 17.3 | 13.7 | 0.79 | 4.9 | 16.6 | 13.4 | 0.81 | 5.1 | 15.9 | 13.2 | 0.83 | 5.3 | 15.1 | 12.8 | 0.85 | 5.6 | 14.2 | 12.5 | 0.88 | 5.9 |
| | 19 | 18.5 | 13.0 | 0.70 | 4.7 | 17.8 | 12.6 | 0.71 | 4.9 | 17.1 | 12.3 | 0.72 | 5.2 | 16.3 | 12.1 | 0.74 | 5.4 | 15.6 | 11.9 | 0.76 | 5.7 | 14.6 | 11.4 | 0.78 | 6.0 |
| | 20 | 19.0 | 12.0 | 0.63 | 4.8 | 18.3 | 11.7 | 0.64 | 5.0 | 17.6 | 11.4 | 0.65 | 5.2 | 16.8 | 11.1 | 0.66 | 5.5 | 16.0 | 10.7 | 0.67 | 5.8 | 15.0 | 10.4 | 0.69 | 6.1 |
| | 21 | 19.5 | 10.9 | 0.56 | 4.8 | 18.8 | 10.7 | 0.57 | 5.1 | 18.0 | 10.4 | 0.58 | 5.3 | 17.3 | 10.2 | 0.59 | 5.6 | 16.4 | 9.8 | 0.60 | 5.9 | 15.4 | 9.5 | 0.62 | 6.2 |
| | 22 | 20.1 | 10.1 | 0.50 | 4.9 | 19.3 | 9.7 | 0.50 | 5.1 | 18.5 | 9.4 | 0.51 | 5.4 | 17.7 | 9.2 | 0.52 | 5.7 | 16.9 | 9.0 | 0.53 | 6.0 | 15.9 | 8.6 | 0.54 | 6.3 |
| | 23 | 20.7 | 9.1 | 0.44 | 4.9 | 19.9 | 8.8 | 0.44 | 5.2 | 19.1 | 8.6 | 0.45 | 5.5 | 18.3 | 8.2 | 0.45 | 5.8 | 17.4 | 8.0 | 0.46 | 6.1 | 16.4 | 7.5 | 0.46 | 6.4 |
| 28 | 19 | 18.5 | 14.8 | 0.80 | 4.7 | 17.8 | 14.4 | 0.81 | 4.9 | 17.1 | 14.2 | 0.83 | 5.2 | 16.3 | 13.9 | 0.85 | 5.4 | 15.6 | 13.6 | 0.87 | 5.7 | 14.6 | 13.1 | 0.90 | 6.0 |
| | 20 | 19.0 | 13.7 | 0.72 | 4.8 | 18.3 | 13.4 | 0.73 | 5.0 | 17.6 | 13.2 | 0.75 | 5.2 | 16.8 | 12.8 | 0.76 | 5.5 | 16.0 | 12.5 | 0.78 | 5.8 | 15.0 | 12.2 | 0.81 | 6.1 |
| | 21 | 19.5 | 12.9 | 0.66 | 4.8 | 18.8 | 12.6 | 0.67 | 5.1 | 18.0 | 12.2 | 0.68 | 5.3 | 17.3 | 11.9 | 0.69 | 5.6 | 16.4 | 11.6 | 0.71 | 5.9 | 15.4 | 11.2 | 0.73 | 6.2 |
| | 22 | 20.1 | 11.9 | 0.59 | 4.9 | 19.3 | 11.6 | 0.60 | 5.1 | 18.5 | 11.3 | 0.61 | 5.4 | 17.7 | 11.0 | 0.62 | 5.7 | 16.9 | 10.6 | 0.63 | 6.0 | 15.9 | 10.3 | 0.65 | 6.3 |
| | 23 | 20.7 | 11.0 | 0.53 | 4.9 | 19.9 | 10.5 | 0.53 | 5.2 | 19.1 | 10.3 | 0.54 | 5.5 | 18.3 | 10.1 | 0.55 | 5.8 | 17.4 | 9.7 | 0.56 | 6.1 | 16.4 | 9.3 | 0.57 | 6.4 |
| | 24 | 21.4 | 10.1 | 0.47 | 5.0 | 20.6 | 9.7 | 0.47 | 5.3 | 19.8 | 9.5 | 0.48 | 5.6 | 18.9 | 9.1 | 0.48 | 5.9 | 18.0 | 8.8 | 0.49 | 6.2 | 16.8 | 8.4 | 0.50 | 6.5 |
| 30 | 20 | 19.0 | 15.6 | 0.82 | 4.8 | 18.3 | 15.2 | 0.83 | 5.0 | 17.6 | 15.0 | 0.85 | 5.2 | 16.8 | 14.6 | 0.87 | 5.5 | 16.0 | 14.2 | 0.89 | 5.8 | 15.0 | 14.0 | 0.93 | 6.1 |
| | 21 | 19.5 | 14.6 | 0.75 | 4.8 | 18.8 | 14.3 | 0.76 | 5.1 | 18.0 | 14.0 | 0.78 | 5.3 | 17.3 | 13.8 | 0.80 | 5.6 | 16.4 | 13.4 | 0.82 | 5.9 | 15.4 | 13.1 | 0.85 | 6.2 |
| | 22 | 20.1 | 13.7 | 0.68 | 4.9 | 19.3 | 13.3 | 0.69 | 5.1 | 18.5 | 13.0 | 0.70 | 5.4 | 17.7 | 12.7 | 0.72 | 5.7 | 16.9 | 12.5 | 0.74 | 6.0 | 15.9 | 12.1 | 0.76 | 6.3 |
| | 23 | 20.7 | 12.6 | 0.61 | 4.9 | 19.9 | 12.3 | 0.62 | 5.2 | 19.1 | 12.0 | 0.63 | 5.5 | 18.3 | 11.9 | 0.65 | 5.8 | 17.4 | 11.7 | 0.67 | 6.1 | 16.4 | 11.3 | 0.69 | 6.4 |
| | 24 | 21.4 | 11.8 | 0.55 | 5.0 | 20.6 | 11.5 | 0.56 | 5.3 | 19.8 | 11.3 | 0.57 | 5.6 | 18.9 | 11.0 | 0.58 | 5.9 | 18.0 | 10.6 | 0.59 | 6.2 | 16.8 | 10.2 | 0.61 | 6.5 |

Note1. * Q:COOLING CAPACITY SHC:SENSIBLE HEAT CAPACITY T/I:TOTAL INPUT

## Factor for Various Air Flow

| PR-5YC$_1$ PRH-5YA$_1$ PRH-5YA$_1$-L | AIR VOLUME | CMM | 45 | 50 | 55 | 60 |
|---|---|---|---|---|---|---|
| | | L/S | 750 | 830 | 920 | 1,000 |
| COOLING | CAPACITY | | 0.975 | 0.988 | 1.0 | 1.013 |
| | TOTAL INPUT | | 0.987 | 0.994 | 1.0 | 1.005 |

# Cooling Capacity (Nominal Air Flow)
## (Use for low ambient temp. parts): PR-5YC$_1$, PRH-5YA$_1$, PRH-5YA$_1$-L

OPERATION RANGE:
- PR-5YC$_1$
- PRH-5YA$_1$-L
- PRH-5YA$_1$

| INDOOR DB°C | INDOOR WB°C | OUTDOOR DB°C -5.0 Q kW | SHCkW | SHF | T/I kW | 0.0 Q kW | SHCkW | SHF | T/I kW | 5.0 Q kW | SHCkW | SHF | T/I kW | 10.0 Q kW | SHCkW | SHF | T/I kW | 15.0 Q kW | SHCkW | SHF | T/I kW |
|---|---|---|---|---|---|---|---|---|---|---|---|---|---|---|---|---|---|---|---|---|---|
| 20 | 15 | 18.0 | 12.1 | 0.67 | 4.0 | 17.9 | 12.0 | 0.67 | 4.0 | 17.7 | 12.0 | 0.68 | 4.1 | 17.4 | 11.8 | 0.68 | 4.2 | 16.9 | 11.7 | 0.69 | 4.3 |
| | 16 | 18.5 | 11.1 | 0.60 | 4.0 | 18.4 | 11.0 | 0.60 | 4.0 | 18.2 | 10.9 | 0.60 | 4.1 | 17.9 | 10.9 | 0.61 | 4.2 | 17.4 | 10.6 | 0.61 | 4.4 |
| | 17 | 19.1 | 10.1 | 0.53 | 4.1 | 19.0 | 10.1 | 0.53 | 4.1 | 18.7 | 9.9 | 0.53 | 4.2 | 18.3 | 9.7 | 0.53 | 4.3 | 17.9 | 9.7 | 0.54 | 4.4 |
| 22 | 15 | 18.0 | 13.9 | 0.77 | 4.0 | 17.9 | 13.8 | 0.77 | 4.0 | 17.7 | 13.8 | 0.78 | 4.1 | 17.4 | 13.6 | 0.78 | 4.2 | 16.9 | 13.4 | 0.79 | 4.3 |
| | 16 | 18.5 | 13.0 | 0.70 | 4.0 | 18.4 | 12.9 | 0.70 | 4.0 | 18.2 | 12.9 | 0.71 | 4.1 | 17.9 | 12.7 | 0.71 | 4.2 | 17.4 | 12.5 | 0.72 | 4.4 |
| | 17 | 19.1 | 12.0 | 0.63 | 4.1 | 19.0 | 12.0 | 0.63 | 4.1 | 18.7 | 11.8 | 0.63 | 4.2 | 18.3 | 11.7 | 0.64 | 4.3 | 17.9 | 11.5 | 0.64 | 4.4 |
| | 18 | 19.7 | 11.0 | 0.56 | 4.1 | 19.6 | 11.0 | 0.56 | 4.1 | 19.3 | 10.8 | 0.56 | 4.2 | 18.9 | 10.8 | 0.57 | 4.3 | 18.5 | 10.5 | 0.57 | 4.5 |
| | 19 | 20.3 | 10.2 | 0.50 | 4.2 | 20.2 | 10.1 | 0.50 | 4.2 | 19.9 | 10.0 | 0.50 | 4.3 | 19.5 | 9.8 | 0.50 | 4.4 | 19.1 | 9.7 | 0.51 | 4.5 |
| 24 | 16 | 18.5 | 14.8 | 0.80 | 4.0 | 18.4 | 14.7 | 0.80 | 4.0 | 18.2 | 14.7 | 0.81 | 4.1 | 17.9 | 14.5 | 0.81 | 4.2 | 17.4 | 14.3 | 0.82 | 4.4 |
| | 17 | 19.1 | 13.9 | 0.73 | 4.1 | 19.0 | 13.9 | 0.73 | 4.1 | 18.7 | 13.8 | 0.74 | 4.2 | 18.3 | 13.5 | 0.74 | 4.3 | 17.9 | 13.4 | 0.75 | 4.4 |
| | 18 | 19.7 | 13.0 | 0.66 | 4.1 | 19.6 | 12.9 | 0.66 | 4.1 | 19.3 | 12.9 | 0.67 | 4.2 | 18.9 | 12.7 | 0.67 | 4.3 | 18.5 | 12.6 | 0.68 | 4.5 |
| | 19 | 20.3 | 12.0 | 0.59 | 4.2 | 20.2 | 11.9 | 0.59 | 4.2 | 19.9 | 11.7 | 0.59 | 4.3 | 19.5 | 11.7 | 0.60 | 4.4 | 19.1 | 11.5 | 0.60 | 4.5 |
| | 20 | 20.9 | 10.9 | 0.52 | 4.2 | 20.8 | 10.8 | 0.52 | 4.2 | 20.5 | 10.7 | 0.52 | 4.3 | 20.1 | 10.7 | 0.53 | 4.4 | 19.6 | 10.4 | 0.53 | 4.6 |
| | 21 | 21.6 | 9.9 | 0.46 | 4.3 | 21.5 | 9.9 | 0.46 | 4.3 | 21.2 | 9.8 | 0.46 | 4.4 | 20.8 | 9.8 | 0.47 | 4.5 | 20.2 | 9.5 | 0.47 | 4.6 |
| 26 | 18 | 19.7 | 14.8 | 0.75 | 4.1 | 19.6 | 14.7 | 0.75 | 4.1 | 19.3 | 14.7 | 0.76 | 4.2 | 18.9 | 14.4 | 0.76 | 4.3 | 18.5 | 14.2 | 0.77 | 4.5 |
| | 19 | 20.3 | 13.8 | 0.68 | 4.2 | 20.2 | 13.7 | 0.68 | 4.2 | 19.9 | 13.7 | 0.69 | 4.3 | 19.5 | 13.5 | 0.69 | 4.4 | 19.1 | 13.4 | 0.70 | 4.5 |
| | 20 | 20.9 | 12.7 | 0.61 | 4.2 | 20.8 | 12.7 | 0.61 | 4.2 | 20.5 | 12.7 | 0.62 | 4.3 | 20.1 | 12.5 | 0.62 | 4.4 | 19.6 | 12.3 | 0.63 | 4.6 |
| | 21 | 21.6 | 11.9 | 0.55 | 4.3 | 21.5 | 11.8 | 0.55 | 4.3 | 21.2 | 11.7 | 0.55 | 4.4 | 20.8 | 11.6 | 0.56 | 4.5 | 20.2 | 11.3 | 0.56 | 4.6 |
| | 22 | 22.3 | 10.9 | 0.49 | 4.3 | 22.1 | 10.8 | 0.49 | 4.3 | 21.8 | 10.7 | 0.49 | 4.4 | 21.4 | 10.7 | 0.50 | 4.5 | 20.8 | 10.4 | 0.50 | 4.7 |
| | 23 | 23.0 | 9.9 | 0.43 | 4.4 | 22.8 | 9.8 | 0.43 | 4.4 | 22.5 | 9.7 | 0.43 | 4.5 | 22.0 | 9.7 | 0.44 | 4.6 | 21.4 | 9.4 | 0.44 | 4.7 |
| 28 | 19 | 20.3 | 15.6 | 0.77 | 4.2 | 20.2 | 15.6 | 0.77 | 4.2 | 19.9 | 15.5 | 0.78 | 4.3 | 19.5 | 15.2 | 0.78 | 4.4 | 19.1 | 15.1 | 0.79 | 4.5 |
| | 20 | 20.9 | 14.6 | 0.70 | 4.2 | 20.8 | 14.6 | 0.70 | 4.2 | 20.5 | 14.6 | 0.71 | 4.3 | 20.1 | 14.3 | 0.71 | 4.4 | 19.6 | 14.1 | 0.72 | 4.6 |
| | 21 | 21.6 | 13.6 | 0.63 | 4.3 | 21.5 | 13.5 | 0.63 | 4.3 | 21.2 | 13.6 | 0.64 | 4.4 | 20.8 | 13.3 | 0.64 | 4.5 | 20.2 | 13.1 | 0.65 | 4.6 |
| | 22 | 22.3 | 12.7 | 0.57 | 4.3 | 22.1 | 12.6 | 0.57 | 4.3 | 21.8 | 12.6 | 0.58 | 4.4 | 21.4 | 12.4 | 0.58 | 4.5 | 20.8 | 12.3 | 0.59 | 4.7 |
| | 23 | 23.0 | 11.7 | 0.51 | 4.4 | 22.8 | 11.6 | 0.51 | 4.4 | 22.5 | 11.5 | 0.51 | 4.5 | 22.0 | 11.4 | 0.52 | 4.6 | 21.4 | 11.1 | 0.52 | 4.7 |
| | 24 | 23.7 | 10.7 | 0.45 | 4.4 | 23.5 | 10.6 | 0.45 | 4.4 | 23.2 | 10.4 | 0.45 | 4.5 | 22.7 | 10.4 | 0.46 | 4.6 | 22.1 | 10.2 | 0.46 | 4.8 |
| 30 | 20 | 20.9 | 16.3 | 0.78 | 4.2 | 20.8 | 16.2 | 0.78 | 4.2 | 20.5 | 16.2 | 0.79 | 4.3 | 20.1 | 16.1 | 0.80 | 4.4 | 19.6 | 15.9 | 0.81 | 4.6 |
| | 21 | 21.6 | 15.3 | 0.71 | 4.3 | 21.5 | 15.3 | 0.71 | 4.3 | 21.2 | 15.3 | 0.72 | 4.4 | 20.8 | 15.2 | 0.73 | 4.5 | 20.2 | 14.9 | 0.74 | 4.6 |
| | 22 | 22.3 | 14.5 | 0.65 | 4.3 | 22.1 | 12.2 | 0.55 | 4.3 | 21.8 | 14.4 | 0.66 | 4.4 | 21.4 | 14.1 | 0.66 | 4.5 | 20.8 | 13.9 | 0.67 | 4.7 |
| | 23 | 23.0 | 13.6 | 0.59 | 4.4 | 22.8 | 13.5 | 0.59 | 4.4 | 22.5 | 13.5 | 0.60 | 4.5 | 22.0 | 13.2 | 0.60 | 4.6 | 21.4 | 13.1 | 0.61 | 4.7 |
| | 24 | 23.7 | 12.6 | 0.53 | 4.4 | 23.5 | 12.5 | 0.53 | 4.4 | 23.2 | 12.5 | 0.54 | 4.5 | 22.7 | 12.3 | 0.54 | 4.6 | 22.1 | 12.2 | 0.55 | 4.8 |

Note1. * Q:COOLING CAPACITY SHC:SENSIBLE HEAT CAPACITY T/I:TOTAL INPUT

# Heating Capacity
## (Nominal Air Flow): PRH-5YA$_1$, PRH-5YA$_1$-L

OPERATION RANGE:
- PRH-5YA$_1$-L
- PRH-5YA$_1$

| INDOOR DB°C | OUTDOOR WB°C -10.0 Q kW | T/I kW | -5.0 Q kW | T/I kW | 0.0 Q kW | T/I kW |
|---|---|---|---|---|---|---|
| 15 | 9.5 | 3.7 | 11.2 | 3.8 | 13.1 | 4.0 |
| 16 | 9.5 | 3.7 | 11.2 | 3.8 | 13.0 | 4.0 |
| 17 | 9.4 | 3.7 | 11.1 | 3.8 | 12.9 | 4.1 |
| 18 | 9.4 | 3.7 | 11.1 | 3.8 | 12.9 | 4.1 |
| 19 | 9.3 | 3.7 | 11.0 | 3.9 | 12.8 | 4.2 |
| 20 | 9.3 | 3.7 | 10.9 | 3.9 | 12.7 | 4.2 |
| 21 | 9.2 | 3.7 | 10.9 | 3.9 | 12.7 | 4.2 |
| 22 | 9.2 | 3.8 | 10.8 | 4.0 | 12.6 | 4.3 |
| 23 | 9.1 | 3.8 | 10.7 | 4.0 | 12.5 | 4.3 |
| 24 | 9.1 | 3.8 | 10.7 | 4.0 | 12.5 | 4.3 |
| 25 | 9.0 | 3.8 | 10.6 | 4.1 | 12.4 | 4.4 |
| 26 | 8.9 | 3.8 | 10.5 | 4.1 | 12.3 | 4.4 |
| 27 | 8.9 | 3.8 | 10.5 | 4.1 | 12.3 | 4.4 |

OPERATION RANGE:
- PRH-5YA$_1$-L
- PRH-5YA$_1$

| INDOOR DB°C | OUTDOOR WB°C 5.0 Q kW | T/I kW | 10.0 Q kW | T/I kW | 15.0 Q kW | T/I kW |
|---|---|---|---|---|---|---|
| 15 | 15.1 | 4.3 | 17.4 | 4.7 | 19.6 | 5.1 |
| 16 | 15.0 | 4.3 | 17.3 | 4.7 | 19.5 | 5.1 |
| 17 | 14.9 | 4.3 | 17.2 | 4.8 | 19.4 | 5.2 |
| 18 | 14.9 | 4.4 | 17.2 | 4.8 | 19.4 | 5.2 |
| 19 | 14.8 | 4.4 | 17.1 | 4.9 | 19.3 | 5.3 |
| 20 | 14.8 | 4.5 | 17.0 | 4.9 | 19.2 | 5.3 |
| 21 | 14.7 | 4.5 | 16.9 | 5.0 | 19.1 | 5.4 |
| 22 | 14.6 | 4.6 | 16.8 | 5.0 | 19.0 | 5.4 |
| 23 | 14.5 | 4.6 | 16.7 | 5.1 | 18.9 | 5.5 |
| 24 | 14.4 | 4.7 | 16.6 | 5.1 | 18.8 | 5.5 |
| 25 | 14.3 | 4.7 | 16.5 | 5.2 | 18.7 | 5.6 |
| 26 | 14.2 | 4.8 | 16.4 | 5.2 | 18.6 | 5.6 |
| 27 | 14.2 | 4.8 | 16.3 | 5.3 | 18.4 | 5.7 |

* Q:HEATING CAPACITY T/I:TOTAL INPUT

# Factor for Various Air Flow

| PR-5YC$_1$ PRH-5YA$_1$ PRH-5YA$_1$-L | AIR VOLUME | CMM | 45 | 50 | 55 | 60 |
|---|---|---|---|---|---|---|
| | | L/S | 750 | 830 | 920 | 1,000 |
| COOLING | CAPACITY | | 0.975 | 0.988 | 1.0 | 1.013 |
| | TOTAL INPUT | | 0.987 | 0.994 | 1.0 | 1.005 |

# Factor for Various Air Flow

| PRH-5YA$_1$ PRH-5YA$_1$-L | AIR VOLUME | CMM | 45 | 50 | 55 | 60 |
|---|---|---|---|---|---|---|
| | | L/S | 750 | 830 | 920 | 1,000 |
| HEATING | CAPACITY | | 0.975 | 0.988 | 1.0 | 1.008 |
| | TOTAL INPUT | | 1.035 | 1.018 | 1.0 | 0.990 |

# Cooling Capacity (Nominal Air Flow):PR-8YC$_1$, PRH-8YA$_1$, PRH-8YA$_1$-L

| OPERATION RANGE | | PR-8YC$_1$ / PRH-8YA$_1$-L / PRH-8YA$_1$ | | | | | | | | | | | | | | | | | | | | | | | |
|---|---|---|---|---|---|---|---|---|---|---|---|---|---|---|---|---|---|---|---|---|---|---|---|---|---|
| | | OUTDOOR DB˚C | | | | | | | | | | | | | | | | | | | | | | | |
| INDOOR | INDOOR | 20.0 | | | | 25.0 | | | | 30.0 | | | | 35.0 | | | | 40.0 | | | | 46.0 | | | |
| DB˚C | WB˚C | Q kW | SHCkW | SHF | T/I kW | Q kW | SHCkW | SHF | T/I kW | Q kW | SHCkW | SHF | T/I kW | Q kW | SHCkW | SHF | T/I kW | Q kW | SHCkW | SHF | T/I kW | Q kW | SHCkW | SHF | T/I kW |
| 20 | 15 | 22.8 | 16.2 | 0.71 | 6.9 | 22.3 | 15.8 | 0.71 | 7.2 | 21.7 | 15.6 | 0.72 | 7.5 | 21.0 | 15.3 | 0.73 | 7.8 | 20.3 | 15.0 | 0.74 | 8.2 | 19.4 | 14.7 | 0.76 | 8.7 |
| | 16 | 23.5 | 14.8 | 0.63 | 6.9 | 22.9 | 14.4 | 0.63 | 7.2 | 22.3 | 14.3 | 0.64 | 7.6 | 21.6 | 14.0 | 0.65 | 7.9 | 20.9 | 13.8 | 0.66 | 8.3 | 20.1 | 13.5 | 0.67 | 8.8 |
| | 17 | 24.2 | 13.3 | 0.55 | 7.0 | 23.6 | 13.0 | 0.55 | 7.3 | 23.0 | 12.7 | 0.55 | 7.7 | 22.3 | 12.5 | 0.56 | 8.1 | 21.6 | 12.1 | 0.56 | 8.5 | 20.7 | 11.8 | 0.57 | 9.0 |
| 22 | 15 | 22.8 | 19.2 | 0.84 | 6.9 | 22.3 | 19.0 | 0.85 | 7.2 | 21.7 | 18.7 | 0.86 | 7.5 | 21.0 | 18.3 | 0.87 | 7.8 | 20.3 | 17.9 | 0.88 | 8.2 | 19.4 | 17.5 | 0.90 | 8.7 |
| | 16 | 23.5 | 17.6 | 0.75 | 6.9 | 22.9 | 17.4 | 0.76 | 7.2 | 22.3 | 17.2 | 0.77 | 7.6 | 21.6 | 16.8 | 0.78 | 7.9 | 20.9 | 16.5 | 0.79 | 8.3 | 20.1 | 16.3 | 0.81 | 8.8 |
| | 17 | 24.2 | 16.2 | 0.67 | 7.0 | 23.6 | 15.8 | 0.67 | 7.3 | 23.0 | 15.6 | 0.68 | 7.7 | 22.3 | 15.4 | 0.69 | 8.1 | 21.6 | 15.1 | 0.70 | 8.5 | 20.7 | 14.7 | 0.71 | 9.0 |
| | 18 | 25.0 | 14.8 | 0.59 | 7.0 | 24.4 | 14.4 | 0.59 | 7.4 | 23.7 | 14.2 | 0.60 | 7.8 | 23.0 | 14.0 | 0.61 | 8.2 | 22.3 | 13.8 | 0.62 | 8.6 | 21.3 | 13.4 | 0.63 | 9.1 |
| | 19 | 25.7 | 13.4 | 0.52 | 7.1 | 25.2 | 13.1 | 0.52 | 7.5 | 24.5 | 13.0 | 0.53 | 7.9 | 23.8 | 12.6 | 0.53 | 8.3 | 23.0 | 12.4 | 0.54 | 8.7 | 22.0 | 11.9 | 0.54 | 9.2 |
| 24 | 16 | 23.5 | 20.4 | 0.87 | 6.9 | 22.9 | 20.2 | 0.88 | 7.2 | 22.3 | 19.8 | 0.89 | 7.6 | 21.6 | 19.7 | 0.91 | 7.9 | 20.9 | 19.4 | 0.93 | 8.3 | 20.1 | 19.1 | 0.95 | 8.8 |
| | 17 | 24.2 | 18.9 | 0.78 | 7.0 | 23.6 | 18.6 | 0.79 | 7.3 | 23.0 | 18.6 | 0.81 | 7.7 | 22.3 | 18.3 | 0.82 | 8.1 | 21.6 | 18.1 | 0.84 | 8.5 | 20.7 | 17.6 | 0.85 | 9.0 |
| | 18 | 25.0 | 17.5 | 0.70 | 7.0 | 24.4 | 17.3 | 0.71 | 7.4 | 23.7 | 17.1 | 0.72 | 7.8 | 23.0 | 16.8 | 0.73 | 8.2 | 22.3 | 16.7 | 0.75 | 8.6 | 21.3 | 16.2 | 0.76 | 9.1 |
| | 19 | 25.7 | 15.9 | 0.62 | 7.1 | 25.2 | 15.6 | 0.62 | 7.5 | 24.5 | 15.4 | 0.63 | 7.9 | 23.8 | 15.2 | 0.64 | 8.3 | 23.0 | 15.0 | 0.65 | 8.7 | 22.0 | 14.5 | 0.66 | 9.2 |
| | 20 | 26.5 | 14.6 | 0.55 | 7.2 | 25.9 | 14.2 | 0.55 | 7.6 | 25.2 | 14.1 | 0.56 | 8.0 | 24.5 | 13.7 | 0.56 | 8.4 | 23.7 | 13.5 | 0.57 | 8.9 | 22.7 | 13.2 | 0.58 | 9.4 |
| | 21 | 27.3 | 13.1 | 0.48 | 7.3 | 26.7 | 12.8 | 0.48 | 7.7 | 25.9 | 12.7 | 0.49 | 8.1 | 25.2 | 12.3 | 0.49 | 8.6 | 24.4 | 12.2 | 0.50 | 9.0 | 23.4 | 11.7 | 0.50 | 9.6 |
| 26 | 18 | 25.0 | 20.5 | 0.82 | 7.0 | 24.4 | 20.3 | 0.83 | 7.4 | 23.7 | 19.9 | 0.84 | 7.8 | 23.0 | 19.6 | 0.85 | 8.2 | 22.3 | 19.2 | 0.86 | 8.6 | 21.3 | 18.7 | 0.88 | 9.1 |
| | 19 | 25.7 | 18.8 | 0.73 | 7.1 | 25.2 | 18.6 | 0.74 | 7.5 | 24.5 | 18.4 | 0.75 | 7.9 | 23.8 | 18.1 | 0.76 | 8.3 | 23.0 | 17.7 | 0.77 | 8.7 | 22.0 | 17.4 | 0.79 | 9.2 |
| | 20 | 26.5 | 17.2 | 0.65 | 7.2 | 25.9 | 17.1 | 0.66 | 7.6 | 25.2 | 16.9 | 0.67 | 8.0 | 24.5 | 16.7 | 0.68 | 8.4 | 23.7 | 16.4 | 0.69 | 8.9 | 22.7 | 15.9 | 0.70 | 9.4 |
| | 21 | 27.3 | 15.8 | 0.58 | 7.3 | 26.7 | 15.8 | 0.59 | 7.7 | 25.9 | 15.5 | 0.60 | 8.1 | 25.2 | 15.4 | 0.61 | 8.6 | 24.4 | 15.1 | 0.62 | 9.0 | 23.4 | 14.5 | 0.62 | 9.6 |
| | 22 | 28.1 | 14.3 | 0.51 | 7.4 | 27.5 | 14.3 | 0.52 | 7.8 | 26.7 | 14.2 | 0.53 | 8.3 | 26.0 | 13.8 | 0.53 | 8.7 | 25.2 | 13.6 | 0.54 | 9.2 | 24.1 | 13.0 | 0.54 | 9.7 |
| | 23 | 29.0 | 13.1 | 0.45 | 7.5 | 28.4 | 12.8 | 0.45 | 7.9 | 27.6 | 12.7 | 0.46 | 8.4 | 26.8 | 12.3 | 0.46 | 8.8 | 26.0 | 12.2 | 0.47 | 9.3 | 24.9 | 11.7 | 0.47 | 9.9 |
| 28 | 19 | 25.7 | 21.6 | 0.84 | 7.1 | 25.2 | 21.4 | 0.85 | 7.5 | 24.5 | 21.1 | 0.86 | 7.9 | 23.8 | 20.7 | 0.87 | 8.3 | 23.0 | 20.5 | 0.89 | 8.7 | 22.0 | 20.0 | 0.91 | 9.2 |
| | 20 | 26.5 | 20.1 | 0.76 | 7.2 | 25.9 | 19.9 | 0.77 | 7.6 | 25.2 | 19.7 | 0.78 | 8.0 | 24.5 | 19.4 | 0.79 | 8.4 | 23.7 | 19.0 | 0.80 | 8.9 | 22.7 | 18.6 | 0.82 | 9.4 |
| | 21 | 27.3 | 18.6 | 0.68 | 7.3 | 26.7 | 18.4 | 0.69 | 7.7 | 25.9 | 18.1 | 0.70 | 8.1 | 25.2 | 17.9 | 0.71 | 8.6 | 24.4 | 17.6 | 0.72 | 9.0 | 23.4 | 17.3 | 0.74 | 9.6 |
| | 22 | 28.1 | 17.1 | 0.61 | 7.4 | 27.5 | 16.8 | 0.61 | 7.8 | 26.7 | 16.6 | 0.62 | 8.3 | 26.0 | 16.4 | 0.63 | 8.7 | 25.2 | 16.1 | 0.64 | 9.2 | 24.1 | 15.7 | 0.65 | 9.7 |
| | 23 | 29.0 | 15.7 | 0.54 | 7.5 | 28.4 | 15.3 | 0.54 | 7.9 | 27.6 | 15.2 | 0.55 | 8.4 | 26.8 | 15.0 | 0.56 | 8.8 | 26.0 | 14.6 | 0.56 | 9.3 | 24.9 | 14.2 | 0.57 | 9.9 |
| | 24 | 30.0 | 14.4 | 0.48 | 7.6 | 29.3 | 14.1 | 0.48 | 8.1 | 28.5 | 14.0 | 0.49 | 8.5 | 27.7 | 13.6 | 0.49 | 9.0 | 26.8 | 13.1 | 0.49 | 9.5 | 25.6 | 12.8 | 0.50 | 10.0 |
| 30 | 20 | 26.5 | 22.8 | 0.86 | 7.2 | 25.9 | 22.5 | 0.87 | 7.6 | 25.2 | 22.2 | 0.88 | 8.0 | 24.5 | 22.1 | 0.90 | 8.4 | 23.7 | 21.8 | 0.92 | 8.9 | 22.7 | 21.3 | 0.94 | 9.4 |
| | 21 | 27.3 | 21.6 | 0.79 | 7.3 | 26.7 | 21.4 | 0.80 | 7.7 | 25.9 | 21.0 | 0.81 | 8.1 | 25.2 | 20.7 | 0.82 | 8.6 | 24.4 | 20.5 | 0.84 | 9.0 | 23.4 | 20.1 | 0.86 | 9.6 |
| | 22 | 28.1 | 20.0 | 0.71 | 7.4 | 27.5 | 19.8 | 0.72 | 7.8 | 26.7 | 19.5 | 0.73 | 8.3 | 26.0 | 19.2 | 0.74 | 8.7 | 25.2 | 18.9 | 0.75 | 9.2 | 24.1 | 18.6 | 0.77 | 9.7 |
| | 23 | 29.0 | 18.6 | 0.64 | 7.5 | 28.4 | 18.2 | 0.64 | 7.9 | 27.6 | 17.9 | 0.65 | 8.4 | 26.8 | 17.7 | 0.66 | 8.8 | 26.0 | 17.4 | 0.67 | 9.3 | 24.9 | 17.2 | 0.69 | 9.9 |
| | 24 | 30.0 | 17.1 | 0.57 | 7.6 | 29.3 | 16.7 | 0.57 | 8.1 | 28.5 | 16.5 | 0.58 | 8.5 | 27.7 | 16.3 | 0.59 | 9.0 | 26.8 | 16.1 | 0.60 | 9.5 | 25.6 | 15.6 | 0.61 | 10.0 |

Note1.* Q:COOLING CAPACITY SHC:SENSIBLE HEAT CAPACITY T/I:TOTAL INPUT

# Factor for Various Air Flow

| PR-8YC$_1$ PRH-8YA$_1$ PRH-8YA$_1$-L | AIR VOLUME | CMM | 60 | 70 | 80 | 90 | 95 |
|---|---|---|---|---|---|---|---|
| | | L/S | 1,000 | 1,170 | 1,330 | 1,500 | 1,580 |
| COOLING | CAPACITY | | 0.940 | 0.963 | 0.987 | 1.010 | 1.022 |
| | TOTAL INPUT | | 0.978 | 0.987 | 0.996 | 1.005 | 1.010 |

# Cooling Capacity (Nominal Air Flow)
## (Use for low ambient temp. parts): PR-8YC$_1$, PRH-8YA$_1$, PRH-8YA$_1$-L

OPERATION RANGE: PR-8YC$_1$ ; PRH-8YA$_1$-L ; PRH-8YA$_1$

| INDOOR | INDOOR | OUTDOOR DB°C | | | | | | | | | | | | | | | | | | | |
|---|---|---|---|---|---|---|---|---|---|---|---|---|---|---|---|---|---|---|---|---|---|
| | | -5.0 | | | | 0.0 | | | | 5.0 | | | | 10.0 | | | | 15.0 | | | |
| DB°C | WB°C | Q kW | SHCkW | SHF | T/I kW | Q kW | SHCkW | SHF | T/I kW | Q kW | SHCkW | SHF | T/I kW | Q kW | SHCkW | SHF | T/I kW | Q kW | SHCkW | SHF | T/I kW |
| 20 | 15 | 24.4 | 15.1 | 0.70 | 6.1 | 24.2 | 15.0 | 0.70 | 6.1 | 24.0 | 14.9 | 0.70 | 6.2 | 23.7 | 14.9 | 0.71 | 6.4 | 23.3 | 14.7 | 0.71 | 6.6 |
| | 16 | 25.2 | 13.6 | 0.62 | 6.1 | 25.0 | 13.5 | 0.62 | 6.1 | 24.8 | 13.4 | 0.62 | 6.2 | 24.4 | 13.4 | 0.63 | 6.4 | 24.0 | 13.2 | 0.63 | 6.6 |
| | 17 | 25.8 | 20.9 | 0.54 | 6.2 | 25.7 | 21.1 | 0.54 | 6.2 | 25.5 | 20.9 | 0.54 | 6.3 | 25.2 | 20.9 | 0.55 | 6.5 | 24.8 | 20.8 | 0.55 | 6.7 |
| 22 | 15 | 24.4 | 17.8 | 0.81 | 6.1 | 24.2 | 17.9 | 0.82 | 6.1 | 24.0 | 17.8 | 0.82 | 6.2 | 23.7 | 17.8 | 0.83 | 6.4 | 23.3 | 17.5 | 0.84 | 6.6 |
| | 16 | 25.2 | 16.4 | 0.73 | 6.1 | 25.0 | 16.5 | 0.74 | 6.1 | 24.8 | 16.4 | 0.74 | 6.2 | 24.4 | 16.3 | 0.75 | 6.4 | 24.0 | 16.1 | 0.75 | 6.6 |
| | 17 | 25.8 | 15.0 | 0.65 | 6.2 | 25.7 | 14.9 | 0.66 | 6.2 | 25.5 | 14.8 | 0.66 | 6.3 | 25.2 | 14.9 | 0.67 | 6.5 | 24.8 | 14.6 | 0.67 | 6.7 |
| | 18 | 26.5 | 13.5 | 0.58 | 6.2 | 26.4 | 13.5 | 0.58 | 6.2 | 26.2 | 13.4 | 0.58 | 6.3 | 25.9 | 13.2 | 0.59 | 6.5 | 25.5 | 13.3 | 0.59 | 6.7 |
| | 19 | 27.4 | 23.3 | 0.51 | 6.3 | 27.3 | 23.5 | 0.51 | 6.3 | 27.1 | 23.3 | 0.51 | 6.4 | 26.8 | 23.3 | 0.51 | 6.6 | 26.3 | 22.9 | 0.52 | 6.8 |
| 24 | 16 | 25.2 | 19.4 | 0.85 | 6.1 | 25.0 | 19.3 | 0.86 | 6.1 | 24.8 | 19.1 | 0.86 | 6.2 | 24.4 | 19.0 | 0.87 | 6.4 | 24.0 | 18.7 | 0.87 | 6.6 |
| | 17 | 25.8 | 17.8 | 0.77 | 6.2 | 25.7 | 17.7 | 0.77 | 6.2 | 25.5 | 17.6 | 0.77 | 6.3 | 25.2 | 17.6 | 0.78 | 6.5 | 24.8 | 17.4 | 0.78 | 6.7 |
| | 18 | 26.5 | 16.2 | 0.69 | 6.2 | 26.4 | 16.1 | 0.69 | 6.2 | 26.2 | 16.0 | 0.69 | 6.3 | 25.9 | 16.1 | 0.70 | 6.5 | 25.5 | 15.8 | 0.70 | 6.7 |
| | 19 | 27.4 | 14.8 | 0.61 | 6.3 | 27.3 | 14.7 | 0.61 | 6.3 | 27.1 | 14.6 | 0.61 | 6.4 | 26.8 | 14.5 | 0.62 | 6.6 | 26.3 | 14.5 | 0.62 | 6.8 |
| | 20 | 28.3 | 13.3 | 0.54 | 6.3 | 28.2 | 13.3 | 0.54 | 6.3 | 27.9 | 13.1 | 0.54 | 6.4 | 27.6 | 13.0 | 0.54 | 6.6 | 27.1 | 13.0 | 0.55 | 6.9 |
| | 21 | 29.2 | 23.4 | 0.47 | 6.4 | 29.0 | 23.2 | 0.47 | 6.4 | 28.7 | 23.2 | 0.47 | 6.5 | 28.4 | 23.0 | 0.47 | 6.7 | 27.9 | 22.9 | 0.48 | 7.0 |
| 26 | 18 | 26.5 | 18.8 | 0.80 | 6.2 | 26.4 | 18.7 | 0.80 | 6.2 | 26.2 | 18.9 | 0.81 | 6.3 | 25.9 | 18.6 | 0.81 | 6.5 | 25.5 | 18.6 | 0.82 | 6.7 |
| | 19 | 27.4 | 17.5 | 0.71 | 6.3 | 27.3 | 17.5 | 0.71 | 6.3 | 27.1 | 17.3 | 0.72 | 6.4 | 26.8 | 17.4 | 0.72 | 6.6 | 26.3 | 17.1 | 0.73 | 6.8 |
| | 20 | 28.3 | 16.1 | 0.64 | 6.3 | 28.2 | 16.1 | 0.64 | 6.3 | 27.9 | 15.9 | 0.64 | 6.4 | 27.6 | 16.0 | 0.65 | 6.6 | 27.1 | 15.7 | 0.65 | 6.9 |
| | 21 | 29.2 | 14.6 | 0.57 | 6.4 | 29.0 | 14.5 | 0.57 | 6.4 | 28.7 | 14.4 | 0.57 | 6.5 | 28.4 | 14.5 | 0.58 | 6.7 | 27.9 | 14.2 | 0.58 | 7.0 |
| | 22 | 30.1 | 13.2 | 0.50 | 6.5 | 29.9 | 13.2 | 0.50 | 6.5 | 29.6 | 13.0 | 0.50 | 6.6 | 29.2 | 12.8 | 0.51 | 6.8 | 28.7 | 12.9 | 0.51 | 7.1 |
| | 23 | 31.0 | 25.1 | 0.44 | 6.6 | 30.8 | 24.9 | 0.44 | 6.6 | 30.5 | 25.0 | 0.44 | 6.7 | 30.1 | 24.7 | 0.44 | 6.9 | 29.6 | 24.6 | 0.45 | 7.2 |
| 28 | 19 | 27.4 | 20.0 | 0.81 | 6.3 | 27.3 | 19.9 | 0.81 | 6.3 | 27.1 | 20.1 | 0.82 | 6.4 | 26.8 | 19.8 | 0.82 | 6.6 | 26.3 | 19.7 | 0.83 | 6.8 |
| | 20 | 28.3 | 18.7 | 0.73 | 6.3 | 28.2 | 18.6 | 0.73 | 6.3 | 27.9 | 18.7 | 0.74 | 6.4 | 27.6 | 18.5 | 0.74 | 6.6 | 27.1 | 18.4 | 0.75 | 6.9 |
| | 21 | 29.2 | 17.2 | 0.66 | 6.4 | 29.0 | 17.1 | 0.66 | 6.4 | 28.7 | 16.9 | 0.67 | 6.5 | 28.4 | 17.0 | 0.67 | 6.7 | 27.9 | 16.7 | 0.68 | 7.0 |
| | 22 | 30.1 | 16.0 | 0.59 | 6.5 | 29.9 | 15.8 | 0.59 | 6.5 | 29.6 | 15.7 | 0.59 | 6.6 | 29.2 | 15.5 | 0.60 | 6.8 | 28.7 | 15.5 | 0.60 | 7.1 |
| | 23 | 31.0 | 14.6 | 0.53 | 6.6 | 30.8 | 14.5 | 0.53 | 6.6 | 30.5 | 14.3 | 0.53 | 6.7 | 30.1 | 14.1 | 0.53 | 6.9 | 29.6 | 14.2 | 0.54 | 7.2 |
| | 24 | 32.0 | 26.6 | 0.47 | 6.7 | 31.8 | 26.4 | 0.47 | 6.7 | 31.5 | 26.5 | 0.47 | 6.8 | 31.1 | 26.1 | 0.47 | 7.0 | 30.6 | 26.0 | 0.48 | 7.3 |
| 30 | 20 | 28.3 | 21.5 | 0.83 | 6.3 | 28.2 | 21.4 | 0.83 | 6.3 | 27.9 | 21.5 | 0.84 | 6.4 | 27.6 | 21.3 | 0.84 | 6.6 | 27.1 | 21.1 | 0.85 | 6.9 |
| | 21 | 29.2 | 20.1 | 0.76 | 6.4 | 29.0 | 20.0 | 0.76 | 6.4 | 28.7 | 20.1 | 0.77 | 6.5 | 28.4 | 19.9 | 0.77 | 6.7 | 27.9 | 19.8 | 0.78 | 7.0 |
| | 22 | 30.1 | 18.7 | 0.69 | 6.5 | 29.9 | 18.5 | 0.69 | 6.5 | 29.6 | 18.6 | 0.70 | 6.6 | 29.2 | 18.4 | 0.70 | 6.8 | 28.7 | 18.4 | 0.71 | 7.1 |
| | 23 | 31.0 | 17.1 | 0.62 | 6.6 | 30.8 | 16.9 | 0.62 | 6.6 | 30.5 | 16.8 | 0.63 | 6.7 | 30.1 | 16.9 | 0.63 | 6.9 | 29.6 | 16.6 | 0.64 | 7.2 |
| | 24 | 32.0 | 0.0 | 0.55 | 6.7 | 31.8 | 0.0 | 0.55 | 6.7 | 31.5 | 0.0 | 0.55 | 6.8 | 31.1 | 0.0 | 0.56 | 7.0 | 30.6 | 0.0 | 0.56 | 7.3 |

Note1.* Q:COOLING CAPACITY SHC:SENSIBLE HEAT CAPACITY T/I:TOTAL INPUT

# Heating Capacity
## (Nominal Air Flow): PRH-8YA$_1$, PRH-8YA$_1$-L

OPERATION RANGE: PRH-8YA$_1$-L ; PRH-8YA$_1$

| INDOOR | OUTDOOR WB°C | | | | | |
|---|---|---|---|---|---|---|
| | -10 | | -5.0 | | 0.0 | |
| DB°C | Q kW | T/I kW | Q kW | T/I kW | Q kW | T/I kW |
| 15 | 15.4 | 5.3 | 17.6 | 5.6 | 20.1 | 6.1 |
| 16 | 15.3 | 5.3 | 17.5 | 5.6 | 20.0 | 6.1 |
| 17 | 15.2 | 5.3 | 17.4 | 5.6 | 19.9 | 6.1 |
| 18 | 15.1 | 5.3 | 17.3 | 5.6 | 19.9 | 6.2 |
| 19 | 15.1 | 5.3 | 17.3 | 5.7 | 19.8 | 6.2 |
| 20 | 15.0 | 5.4 | 17.2 | 5.7 | 19.7 | 6.3 |
| 21 | 14.9 | 5.4 | 17.1 | 5.7 | 19.6 | 6.3 |
| 22 | 14.8 | 5.4 | 17.0 | 5.8 | 19.5 | 6.3 |
| 23 | 14.7 | 5.4 | 17.0 | 5.8 | 19.5 | 6.4 |
| 24 | 14.7 | 5.5 | 16.9 | 5.8 | 19.4 | 6.4 |
| 25 | 14.6 | 5.5 | 16.8 | 5.9 | 19.3 | 6.5 |
| 26 | 14.5 | 5.5 | 16.7 | 5.9 | 19.2 | 6.5 |
| 27 | 14.5 | 5.5 | 16.7 | 5.9 | 19.2 | 6.5 |

OPERATION RANGE: PRH-8YA$_1$-L ; PRH-8YA$_1$

| INDOOR | OUTDOOR WB°C | | | | | |
|---|---|---|---|---|---|---|
| | 5.0 | | 10.0 | | 15.0 | |
| DB°C | Q kW | T/I kW | Q kW | T/I kW | Q kW | T/I kW |
| 15 | 22.9 | 6.5 | 26.0 | 7.1 | 29.5 | 7.7 |
| 16 | 22.8 | 6.6 | 25.9 | 7.2 | 29.5 | 7.8 |
| 17 | 22.7 | 6.6 | 25.9 | 7.2 | 29.4 | 7.9 |
| 18 | 22.6 | 6.7 | 25.8 | 7.3 | 29.3 | 8.0 |
| 19 | 22.6 | 6.8 | 25.7 | 7.4 | 29.2 | 8.1 |
| 20 | 22.5 | 6.8 | 25.6 | 7.5 | 29.1 | 8.2 |
| 21 | 22.4 | 6.9 | 25.5 | 7.5 | 29.1 | 8.3 |
| 22 | 22.3 | 6.9 | 25.5 | 7.6 | 29.0 | 8.4 |
| 23 | 22.2 | 7.0 | 25.4 | 7.6 | 28.9 | 8.4 |
| 24 | 22.2 | 7.0 | 25.3 | 7.7 | 28.8 | 8.5 |
| 25 | 22.1 | 7.1 | 25.2 | 7.8 | 28.7 | 8.6 |
| 26 | 22.0 | 7.1 | 25.1 | 7.9 | 28.6 | 8.7 |
| 27 | 22.0 | 7.1 | 25.1 | 7.9 | 28.6 | 8.7 |

* Q:HEATING CAPACITY T/I:TOTAL INPUT

# Factor for Various Air Flow

| PR-8YC$_1$ PRH-8YA$_1$ PRH-8YA$_1$-L | AIR VOLUME | CMM | 60 | 70 | 80 | 90 | 95 |
|---|---|---|---|---|---|---|---|
| | | L/S | 1,000 | 1,170 | 1,330 | 1,500 | 1,580 |
| COOLING | CAPACITY | | 0.940 | 0.963 | 0.987 | 1.010 | 1.022 |
| | TOTAL INPUT | | 0.978 | 0.987 | 0.996 | 1.005 | 1.010 |

# Factor for Various Air Flow

| PRH-8YA$_1$ PRH-8YA$_1$-L | AIR VOLUME | CMM | 60 | 70 | 80 | 90 | 95 |
|---|---|---|---|---|---|---|---|
| | | L/S | 1,000 | 1,170 | 1,330 | 1,500 | 1,580 |
| HEATING | CAPACITY | | 0.970 | 0.981 | 0.992 | 1.003 | 1.008 |
| | TOTAL INPUT | | 1.070 | 1.050 | 1.020 | 0.995 | 0.982 |

# Cooling Capacity (Nominal Air Flow):PR-10YC$_1$, PRH-10YA$_1$, PRH-10YA$_1$-L

| OPERATION RANGE | | PR-10YC$_1$ | | | | | | | | | | | | | | | | | | | | | | | |
|---|---|---|---|---|---|---|---|---|---|---|---|---|---|---|---|---|---|---|---|---|---|---|---|---|---|
| | | PRH-10YA$_1$-L | | | | | | | | | | | | | | | | | | | | | | | |
| | | PRH-10YA$_1$ | | | | | | | | | | | | | | | | | | | | | | | |
| | | OUTDOOR DB°C | | | | | | | | | | | | | | | | | | | | | | | |
| INDOOR | INDOOR | 20.0 | | | | 25.0 | | | | 30.0 | | | | 35.0 | | | | 40.0 | | | | 46.0 | | | |
| DB°C | WB°C | Q kW | SHCkW | SHF | T/I kW | Q kW | SHCkW | SHF | T/I kW | Q kW | SHCkW | SHF | T/I kW | Q kW | SHCkW | SHF | T/I kW | Q kW | SHCkW | SHF | T/I kW | Q kW | SHCkW | SHF | T/I kW |
| 20 | 15 | 29.4 | 21.2 | 0.72 | 9.5 | 28.4 | 20.7 | 0.73 | 9.8 | 27.3 | 20.2 | 0.74 | 10.2 | 26.1 | 19.6 | 0.75 | 10.7 | 24.4 | 18.5 | 0.76 | 11.2 | 23.3 | 18.4 | 0.79 | 11.9 |
| | 16 | 30.4 | 19.5 | 0.64 | 9.6 | 29.4 | 18.8 | 0.64 | 9.9 | 28.2 | 18.3 | 0.65 | 10.4 | 27.0 | 17.8 | 0.66 | 10.8 | 25.7 | 17.2 | 0.67 | 11.4 | 24.1 | 16.6 | 0.69 | 12.1 |
| | 17 | 31.4 | 17.6 | 0.56 | 9.7 | 30.3 | 17.0 | 0.56 | 10.1 | 29.1 | 16.6 | 0.57 | 10.5 | 27.9 | 15.9 | 0.57 | 11.0 | 26.6 | 15.4 | 0.58 | 11.6 | 24.9 | 14.7 | 0.59 | 12.3 |
| 22 | 15 | 29.4 | 24.7 | 0.84 | 9.5 | 28.4 | 24.1 | 0.85 | 9.8 | 27.3 | 23.8 | 0.87 | 10.2 | 26.1 | 23.2 | 0.89 | 10.7 | 24.4 | 22.2 | 0.91 | 11.2 | 23.3 | 22.1 | 0.95 | 11.9 |
| | 16 | 30.4 | 23.1 | 0.76 | 9.6 | 29.4 | 22.6 | 0.77 | 9.9 | 28.2 | 22.0 | 0.78 | 10.4 | 27.0 | 21.6 | 0.80 | 10.8 | 25.7 | 21.1 | 0.82 | 11.4 | 24.1 | 20.5 | 0.85 | 12.1 |
| | 17 | 31.4 | 21.4 | 0.68 | 9.7 | 30.3 | 20.6 | 0.68 | 10.1 | 29.1 | 20.1 | 0.69 | 10.5 | 27.9 | 19.5 | 0.70 | 11.0 | 26.6 | 18.9 | 0.71 | 11.6 | 24.9 | 18.4 | 0.74 | 12.3 |
| | 18 | 32.4 | 19.4 | 0.60 | 9.8 | 31.3 | 18.8 | 0.60 | 10.2 | 30.0 | 18.3 | 0.61 | 10.7 | 28.7 | 17.8 | 0.62 | 11.2 | 27.4 | 17.3 | 0.63 | 11.8 | 25.7 | 16.7 | 0.65 | 12.5 |
| | 19 | 33.5 | 17.4 | 0.52 | 9.9 | 32.3 | 16.8 | 0.52 | 10.3 | 31.0 | 16.4 | 0.53 | 10.9 | 29.7 | 16.0 | 0.54 | 11.4 | 28.3 | 15.6 | 0.55 | 12.0 | 26.6 | 14.9 | 0.56 | 12.7 |
| 24 | 16 | 30.4 | 26.8 | 0.88 | 9.6 | 29.4 | 26.5 | 0.90 | 9.9 | 28.2 | 25.9 | 0.92 | 10.4 | 27.0 | 25.4 | 0.94 | 10.8 | 25.7 | 24.7 | 0.96 | 11.4 | 24.1 | 24.1 | 1.00 | 12.1 |
| | 17 | 31.4 | 25.1 | 0.80 | 9.7 | 30.3 | 24.5 | 0.81 | 10.1 | 29.1 | 23.9 | 0.82 | 10.5 | 27.9 | 23.2 | 0.83 | 11.0 | 26.6 | 22.6 | 0.85 | 11.6 | 24.9 | 22.2 | 0.89 | 12.3 |
| | 18 | 32.4 | 23.3 | 0.72 | 9.8 | 31.3 | 22.8 | 0.73 | 10.2 | 30.0 | 22.2 | 0.74 | 10.7 | 28.7 | 21.5 | 0.75 | 11.2 | 27.4 | 21.1 | 0.77 | 11.8 | 25.7 | 20.3 | 0.79 | 12.5 |
| | 19 | 33.5 | 21.1 | 0.63 | 9.9 | 32.3 | 20.7 | 0.64 | 10.3 | 31.0 | 20.2 | 0.65 | 10.9 | 29.7 | 19.6 | 0.66 | 11.4 | 28.3 | 19.0 | 0.67 | 12.0 | 26.6 | 18.4 | 0.69 | 12.7 |
| | 20 | 34.6 | 19.0 | 0.55 | 10.0 | 33.4 | 18.4 | 0.55 | 10.5 | 32.1 | 18.0 | 0.56 | 11.0 | 30.6 | 17.4 | 0.57 | 11.6 | 29.2 | 16.9 | 0.58 | 12.2 | 27.4 | 16.4 | 0.60 | 12.9 |
| | 21 | 35.7 | 17.1 | 0.48 | 10.1 | 34.4 | 16.5 | 0.48 | 10.6 | 33.0 | 16.2 | 0.49 | 11.2 | 31.6 | 15.8 | 0.50 | 11.8 | 30.1 | 15.4 | 0.51 | 12.4 | 28.3 | 14.7 | 0.52 | 13.1 |
| 26 | 18 | 32.4 | 26.9 | 0.83 | 9.8 | 31.3 | 26.3 | 0.84 | 10.2 | 30.0 | 25.8 | 0.86 | 10.7 | 28.7 | 25.3 | 0.88 | 11.2 | 27.4 | 24.7 | 0.90 | 11.8 | 25.7 | 23.9 | 0.93 | 12.5 |
| | 19 | 33.5 | 24.8 | 0.74 | 9.9 | 32.3 | 24.2 | 0.75 | 10.3 | 31.0 | 23.6 | 0.76 | 10.9 | 29.7 | 23.2 | 0.78 | 11.4 | 28.3 | 22.6 | 0.80 | 12.0 | 26.6 | 21.8 | 0.82 | 12.7 |
| | 20 | 34.6 | 22.8 | 0.66 | 10.0 | 33.4 | 22.4 | 0.67 | 10.5 | 32.1 | 21.8 | 0.68 | 11.0 | 30.6 | 21.1 | 0.69 | 11.6 | 29.2 | 20.4 | 0.70 | 12.2 | 27.4 | 20.0 | 0.73 | 12.9 |
| | 21 | 35.7 | 20.7 | 0.58 | 10.1 | 34.4 | 20.0 | 0.58 | 10.6 | 33.0 | 19.5 | 0.59 | 11.2 | 31.6 | 19.0 | 0.60 | 11.8 | 30.1 | 18.4 | 0.61 | 12.4 | 28.3 | 18.1 | 0.64 | 13.1 |
| | 22 | 36.8 | 18.8 | 0.51 | 10.3 | 35.4 | 18.1 | 0.51 | 10.8 | 34.0 | 17.7 | 0.52 | 11.4 | 32.5 | 17.2 | 0.53 | 12.0 | 31.0 | 16.7 | 0.54 | 12.6 | 29.1 | 16.3 | 0.56 | 13.3 |
| | 23 | 38.0 | 17.1 | 0.45 | 10.4 | 36.6 | 16.5 | 0.45 | 11.0 | 35.1 | 16.1 | 0.46 | 11.6 | 33.5 | 15.4 | 0.46 | 12.2 | 31.9 | 15.0 | 0.47 | 12.8 | 30.0 | 14.4 | 0.48 | 13.6 |
| 28 | 19 | 33.5 | 28.1 | 0.84 | 9.9 | 32.3 | 27.5 | 0.85 | 10.3 | 31.0 | 27.0 | 0.87 | 10.9 | 29.7 | 26.4 | 0.89 | 11.4 | 28.3 | 25.8 | 0.91 | 12.0 | 26.6 | 25.3 | 0.95 | 12.7 |
| | 20 | 34.6 | 26.3 | 0.76 | 10.0 | 33.4 | 25.7 | 0.77 | 10.5 | 32.1 | 25.4 | 0.79 | 11.0 | 30.6 | 24.8 | 0.81 | 11.6 | 29.2 | 24.2 | 0.83 | 12.2 | 27.4 | 23.6 | 0.86 | 12.9 |
| | 21 | 35.7 | 24.6 | 0.69 | 10.1 | 34.4 | 24.1 | 0.70 | 10.6 | 33.0 | 23.4 | 0.71 | 11.2 | 31.6 | 23.1 | 0.73 | 11.8 | 30.1 | 22.6 | 0.75 | 12.4 | 28.3 | 21.8 | 0.77 | 13.1 |
| | 22 | 36.8 | 22.4 | 0.61 | 10.3 | 35.4 | 21.9 | 0.62 | 10.8 | 34.0 | 21.4 | 0.63 | 11.4 | 32.5 | 21.1 | 0.65 | 12.0 | 31.0 | 20.5 | 0.66 | 12.6 | 29.1 | 19.8 | 0.68 | 13.3 |
| | 23 | 38.0 | 20.5 | 0.54 | 10.4 | 36.6 | 20.1 | 0.55 | 11.0 | 35.1 | 19.7 | 0.56 | 11.6 | 33.5 | 19.1 | 0.57 | 12.2 | 31.9 | 18.5 | 0.58 | 12.8 | 30.0 | 18.0 | 0.60 | 13.6 |
| | 24 | 39.2 | 18.8 | 0.48 | 10.6 | 37.7 | 18.1 | 0.48 | 11.2 | 36.1 | 17.7 | 0.49 | 11.8 | 34.5 | 17.3 | 0.50 | 12.4 | 32.9 | 16.8 | 0.51 | 13.1 | 30.8 | 16.0 | 0.52 | 13.9 |
| 30 | 20 | 34.6 | 30.1 | 0.87 | 10.0 | 33.4 | 29.7 | 0.89 | 10.5 | 32.1 | 29.2 | 0.91 | 11.0 | 30.6 | 28.5 | 0.93 | 11.6 | 29.2 | 28.0 | 0.96 | 12.2 | 27.4 | 27.1 | 0.99 | 12.9 |
| | 21 | 35.7 | 28.2 | 0.79 | 10.1 | 34.4 | 27.9 | 0.81 | 10.6 | 33.0 | 27.4 | 0.83 | 11.2 | 31.6 | 26.9 | 0.85 | 11.8 | 30.1 | 26.2 | 0.87 | 12.4 | 28.3 | 25.8 | 0.91 | 13.1 |
| | 22 | 36.8 | 26.1 | 0.71 | 10.3 | 35.4 | 25.5 | 0.72 | 10.8 | 34.0 | 25.2 | 0.74 | 11.4 | 32.5 | 24.7 | 0.76 | 12.0 | 31.0 | 24.2 | 0.78 | 12.6 | 29.1 | 23.3 | 0.80 | 13.3 |
| | 23 | 38.0 | 24.3 | 0.64 | 10.4 | 36.6 | 23.8 | 0.65 | 11.0 | 35.1 | 23.5 | 0.67 | 11.6 | 33.5 | 22.8 | 0.68 | 12.2 | 31.9 | 22.3 | 0.70 | 12.8 | 30.0 | 21.6 | 0.72 | 13.6 |
| | 24 | 39.2 | 22.3 | 0.57 | 10.6 | 37.7 | 21.9 | 0.58 | 11.2 | 36.1 | 21.3 | 0.59 | 11.8 | 34.5 | 20.7 | 0.60 | 12.4 | 32.9 | 20.1 | 0.61 | 13.1 | 30.8 | 19.7 | 0.64 | 13.9 |

Note1.* Q:COOLING CAPACITY SHC:SENSIBLE HEAT CAPACITY T/I:TOTAL INPUT

# Factor for Various Air Flow

| PR-10YC$_1$ PRH-10YA$_1$ PRH-10YA$_1$-L | AIR VOLUME | CMM | 90 | 100 | 110 | 120 |
|---|---|---|---|---|---|---|
| | | L/S | 1,500 | 1,660 | 1,830 | 2,000 |
| COOLING | CAPACITY | | 0.987 | 1.0 | 1.033 | 1.066 |
| | TOTAL INPUT | | 0.995 | 1.0 | 1.026 | 1.052 |

# Cooling Capacity (Nominal Air Flow)
## (Use for low ambient temp. parts): PR-10YC$_1$, PRH-10YA$_1$, PRH-10YA$_1$-L

OPERATION RANGE: PR-10YC$_1$ / PRH-10YA$_1$-L / PRH-10YA$_1$

| INDOOR | INDOOR | OUTDOOR DB°C | | | | | | | | | | | | | | | | | | | |
|---|---|---|---|---|---|---|---|---|---|---|---|---|---|---|---|---|---|---|---|---|---|
| | | -5.0 | | | | 0.0 | | | | 5.0 | | | | 10.0 | | | | 15.0 | | | |
| DB °C | WB °C | Q kW | SHCkW | SHF | T/I kW | Q kW | SHCkW | SHF | T/I kW | Q kW | SHCkW | SHF | T/I kW | Q kW | SHCkW | SHF | T/I kW | Q kW | SHCkW | SHF | T/I kW |
| 20 | 15 | 32.7 | 22.6 | 0.69 | 8.6 | 32.3 | 22.3 | 0.69 | 8.6 | 31.8 | 22.3 | 0.70 | 8.7 | 31.2 | 22.2 | 0.71 | 8.9 | 30.4 | 21.9 | 0.72 | 9.1 |
| | 16 | 33.6 | 20.8 | 0.62 | 8.6 | 33.2 | 20.6 | 0.62 | 8.6 | 32.7 | 20.3 | 0.62 | 8.7 | 32.2 | 20.3 | 0.63 | 8.9 | 31.4 | 19.8 | 0.63 | 9.2 |
| | 17 | 34.7 | 18.7 | 0.54 | 8.7 | 34.3 | 18.5 | 0.54 | 8.7 | 33.8 | 18.3 | 0.54 | 8.8 | 33.2 | 18.3 | 0.55 | 9.0 | 32.4 | 17.8 | 0.55 | 9.3 |
| 22 | 15 | 32.7 | 26.5 | 0.81 | 8.6 | 32.3 | 26.5 | 0.82 | 8.6 | 31.8 | 26.1 | 0.82 | 8.7 | 31.2 | 25.9 | 0.83 | 8.9 | 30.4 | 25.2 | 0.83 | 9.1 |
| | 16 | 33.6 | 24.5 | 0.73 | 8.6 | 33.2 | 24.6 | 0.74 | 8.6 | 32.7 | 24.2 | 0.74 | 8.7 | 32.2 | 24.2 | 0.75 | 8.9 | 31.4 | 23.6 | 0.75 | 9.2 |
| | 17 | 34.7 | 22.6 | 0.65 | 8.7 | 34.3 | 22.6 | 0.66 | 8.7 | 33.8 | 22.3 | 0.66 | 8.8 | 33.2 | 22.2 | 0.67 | 9.0 | 32.4 | 21.7 | 0.67 | 9.3 |
| | 18 | 35.7 | 20.7 | 0.58 | 8.8 | 35.3 | 20.5 | 0.58 | 8.8 | 34.8 | 20.2 | 0.58 | 8.9 | 34.2 | 20.2 | 0.59 | 9.1 | 33.4 | 19.7 | 0.59 | 9.4 |
| | 19 | 36.8 | 18.8 | 0.51 | 8.9 | 36.5 | 18.6 | 0.51 | 8.9 | 36.0 | 18.4 | 0.51 | 9.0 | 35.3 | 18.0 | 0.51 | 9.2 | 34.5 | 17.9 | 0.52 | 9.5 |
| 24 | 16 | 33.6 | 28.6 | 0.85 | 8.6 | 33.2 | 28.6 | 0.86 | 8.6 | 32.7 | 28.1 | 0.86 | 8.7 | 32.2 | 28.0 | 0.87 | 8.9 | 31.4 | 27.6 | 0.88 | 9.2 |
| | 17 | 34.7 | 26.4 | 0.76 | 8.7 | 34.3 | 26.1 | 0.76 | 8.7 | 33.8 | 26.0 | 0.77 | 8.8 | 33.2 | 25.9 | 0.78 | 9.0 | 32.4 | 25.6 | 0.79 | 9.3 |
| | 18 | 35.7 | 24.6 | 0.69 | 8.8 | 35.3 | 24.4 | 0.69 | 8.8 | 34.8 | 24.4 | 0.70 | 8.9 | 34.2 | 23.9 | 0.70 | 9.1 | 33.4 | 23.7 | 0.71 | 9.4 |
| | 19 | 36.8 | 22.4 | 0.61 | 8.9 | 36.5 | 22.3 | 0.61 | 8.9 | 36.0 | 22.3 | 0.62 | 9.0 | 35.3 | 21.9 | 0.62 | 9.2 | 34.5 | 21.7 | 0.63 | 9.5 |
| | 20 | 38.1 | 20.6 | 0.54 | 9.0 | 37.8 | 20.4 | 0.54 | 9.0 | 37.3 | 20.1 | 0.54 | 9.1 | 36.6 | 19.8 | 0.54 | 9.3 | 35.7 | 19.6 | 0.55 | 9.6 |
| | 21 | 39.4 | 18.5 | 0.47 | 9.1 | 39.1 | 18.4 | 0.47 | 9.1 | 38.6 | 18.1 | 0.47 | 9.2 | 37.8 | 17.8 | 0.47 | 9.4 | 36.8 | 17.7 | 0.48 | 9.7 |
| 26 | 18 | 35.7 | 28.2 | 0.79 | 8.8 | 35.3 | 27.9 | 0.79 | 8.8 | 34.8 | 27.8 | 0.80 | 8.9 | 34.2 | 27.4 | 0.80 | 9.1 | 33.4 | 27.1 | 0.81 | 9.4 |
| | 19 | 36.8 | 26.1 | 0.71 | 8.9 | 36.5 | 25.9 | 0.71 | 8.9 | 36.0 | 25.9 | 0.72 | 9.0 | 35.3 | 25.4 | 0.72 | 9.2 | 34.5 | 25.2 | 0.73 | 9.5 |
| | 20 | 38.1 | 24.0 | 0.63 | 9.0 | 37.8 | 24.2 | 0.64 | 9.0 | 37.3 | 23.9 | 0.64 | 9.1 | 36.6 | 23.8 | 0.65 | 9.3 | 35.7 | 23.2 | 0.65 | 9.6 |
| | 21 | 39.4 | 22.1 | 0.56 | 9.1 | 39.1 | 22.3 | 0.57 | 9.1 | 38.6 | 22.0 | 0.57 | 9.2 | 37.8 | 21.9 | 0.58 | 9.4 | 36.8 | 21.3 | 0.58 | 9.7 |
| | 22 | 40.7 | 20.4 | 0.50 | 9.2 | 40.4 | 20.2 | 0.50 | 9.2 | 39.8 | 19.9 | 0.50 | 9.4 | 39.1 | 19.9 | 0.51 | 9.6 | 38.1 | 19.4 | 0.51 | 9.9 |
| | 23 | 42.1 | 18.5 | 0.44 | 9.3 | 41.8 | 18.4 | 0.44 | 9.3 | 41.2 | 18.1 | 0.44 | 9.5 | 40.4 | 17.8 | 0.44 | 9.7 | 39.3 | 17.7 | 0.45 | 10.0 |
| 28 | 19 | 36.8 | 29.8 | 0.81 | 8.9 | 36.5 | 29.6 | 0.81 | 8.9 | 36.0 | 29.5 | 0.82 | 9.0 | 35.3 | 28.9 | 0.82 | 9.2 | 34.5 | 28.6 | 0.83 | 9.5 |
| | 20 | 38.1 | 27.8 | 0.73 | 9.0 | 37.8 | 27.6 | 0.73 | 9.0 | 37.3 | 27.6 | 0.74 | 9.1 | 36.6 | 27.1 | 0.74 | 9.3 | 35.7 | 26.8 | 0.75 | 9.6 |
| | 21 | 39.4 | 26.0 | 0.66 | 9.1 | 39.1 | 25.8 | 0.66 | 9.1 | 38.6 | 25.9 | 0.67 | 9.2 | 37.8 | 25.3 | 0.67 | 9.4 | 36.8 | 25.0 | 0.68 | 9.7 |
| | 22 | 40.7 | 24.0 | 0.59 | 9.2 | 40.4 | 23.8 | 0.59 | 9.2 | 39.8 | 23.9 | 0.60 | 9.4 | 39.1 | 23.5 | 0.60 | 9.6 | 38.1 | 23.2 | 0.61 | 9.9 |
| | 23 | 42.1 | 21.9 | 0.52 | 9.3 | 41.8 | 21.7 | 0.52 | 9.3 | 41.2 | 21.8 | 0.53 | 9.5 | 40.4 | 21.4 | 0.53 | 9.7 | 39.3 | 21.2 | 0.54 | 10.0 |
| | 24 | 43.4 | 20.0 | 0.46 | 9.4 | 43.1 | 19.8 | 0.46 | 9.4 | 42.5 | 20.0 | 0.47 | 9.6 | 41.6 | 19.6 | 0.47 | 9.8 | 40.5 | 19.0 | 0.47 | 10.2 |
| 30 | 20 | 38.1 | 31.2 | 0.82 | 9.0 | 37.8 | 31.4 | 0.83 | 9.0 | 37.3 | 31.3 | 0.84 | 9.1 | 36.6 | 31.1 | 0.85 | 9.3 | 35.7 | 30.7 | 0.86 | 9.6 |
| | 21 | 39.4 | 29.6 | 0.75 | 9.1 | 39.1 | 29.3 | 0.75 | 9.1 | 38.6 | 29.3 | 0.76 | 9.2 | 37.8 | 29.1 | 0.77 | 9.4 | 36.8 | 28.7 | 0.78 | 9.7 |
| | 22 | 40.7 | 27.7 | 0.68 | 9.2 | 40.4 | 27.5 | 0.68 | 9.2 | 39.8 | 27.5 | 0.69 | 9.4 | 39.1 | 27.0 | 0.69 | 9.6 | 38.1 | 26.7 | 0.70 | 9.9 |
| | 23 | 42.1 | 25.7 | 0.61 | 9.3 | 41.8 | 25.5 | 0.61 | 9.3 | 41.2 | 25.5 | 0.62 | 9.5 | 40.4 | 25.0 | 0.62 | 9.7 | 39.3 | 24.8 | 0.63 | 10.0 |
| | 24 | 43.4 | 23.9 | 0.55 | 9.4 | 43.1 | 23.7 | 0.55 | 9.4 | 42.5 | 23.8 | 0.56 | 9.6 | 41.6 | 23.3 | 0.56 | 9.8 | 40.5 | 23.1 | 0.57 | 10.2 |

Note1.* Q:COOLING CAPACITY SHC:SENSIBLE HEAT CAPACITY T/I:TOTAL INPUT

# Heating Capacity
## (Nominal Air Flow): PRH-10YA$_1$, PRH-10YA$_1$-L

OPERATION RANGE: PRH-10YA$_1$-L / PRH-10YA$_1$

| INDOOR | OUTDOOR WB°C | | | | | |
|---|---|---|---|---|---|---|
| | -10.0 | | -5.0 | | 0.0 | |
| DB °C | Q kW | T/I kW | Q kW | T/I kW | Q kW | T/I kW |
| 15 | 21.5 | 7.6 | 24.6 | 7.9 | 28.0 | 8.4 |
| 16 | 21.4 | 7.6 | 24.5 | 7.9 | 27.9 | 8.5 |
| 17 | 21.3 | 7.6 | 24.4 | 8.0 | 27.8 | 8.5 |
| 18 | 21.2 | 7.7 | 24.3 | 8.0 | 27.7 | 8.6 |
| 19 | 21.1 | 7.7 | 24.2 | 8.1 | 27.6 | 8.7 |
| 20 | 21.0 | 7.7 | 24.1 | 8.1 | 27.5 | 8.7 |
| 21 | 20.9 | 7.8 | 24.0 | 8.2 | 27.4 | 8.8 |
| 22 | 20.8 | 7.8 | 23.9 | 8.2 | 27.3 | 8.9 |
| 23 | 20.7 | 7.8 | 23.8 | 8.3 | 27.2 | 8.9 |
| 24 | 20.6 | 7.9 | 23.7 | 8.3 | 27.1 | 9.0 |
| 25 | 20.5 | 7.9 | 23.5 | 8.4 | 26.9 | 9.0 |
| 26 | 20.5 | 7.9 | 23.5 | 8.4 | 26.9 | 9.1 |
| 27 | 20.4 | 7.9 | 23.4 | 8.4 | 26.8 | 9.1 |

OPERATION RANGE: PRH-10YA$_1$-L / PRH-10YA$_1$

| INDOOR | OUTDOOR WB°C | | | | | |
|---|---|---|---|---|---|---|
| | 5.0 | | 10.0 | | 15.0 | |
| DB °C | Q kW | T/I kW | Q kW | T/I kW | Q kW | T/I kW |
| 15 | 31.9 | 9.0 | 36.5 | 9.8 | 41.1 | 10.5 |
| 16 | 31.8 | 9.1 | 36.4 | 9.9 | 40.9 | 10.6 |
| 17 | 31.7 | 9.2 | 36.2 | 10.0 | 40.7 | 10.7 |
| 18 | 31.6 | 9.2 | 36.1 | 10.0 | 40.6 | 10.8 |
| 19 | 31.4 | 9.3 | 35.9 | 10.1 | 40.4 | 10.9 |
| 20 | 31.3 | 9.4 | 35.8 | 10.2 | 40.2 | 11.0 |
| 21 | 31.2 | 9.5 | 35.7 | 10.3 | 40.1 | 11.1 |
| 22 | 31.1 | 9.5 | 35.5 | 10.4 | 39.9 | 11.2 |
| 23 | 30.9 | 9.6 | 35.3 | 10.5 | 39.7 | 11.3 |
| 24 | 30.8 | 9.7 | 35.2 | 10.6 | 39.6 | 11.4 |
| 25 | 30.7 | 9.8 | 35.1 | 10.7 | 39.4 | 11.5 |
| 26 | 30.6 | 9.8 | 35.0 | 10.7 | 39.3 | 11.6 |
| 27 | 30.5 | 9.9 | 34.8 | 10.8 | 39.1 | 11.7 |

* Q:HEATING CAPACITY T/I:TOTAL INPUT

# Factor for Various Air Flow

| PR-10YC$_1$ PRH-10YA$_1$-L PRH-10YA$_1$ | AIR VOLUME | CMM | 90 | 100 | 110 | 120 |
|---|---|---|---|---|---|---|
| | | L/S | 1,500 | 1,660 | 1,830 | 2,000 |
| COOLING | CAPACITY | | 0.987 | 1.0 | 1.033 | 1.066 |
| | TOTAL INPUT | | 0.995 | 1.0 | 1.026 | 1.052 |

# Factor for Various Air Flow

| PRH-10YA$_1$ PRH-10YA$_1$-L | AIR VOLUME | CMM | 90 | 100 | 110 | 120 |
|---|---|---|---|---|---|---|
| | | L/S | 1,500 | 1,660 | 1,830 | 2,000 |
| HEATING | CAPACITY | | 0.992 | 1.0 | 1.025 | 1.050 |
| | TOTAL INPUT | | 1.016 | 1.0 | 0.971 | 0.942 |

# Cooling Capacity (Nominal Air Flow):PR-15YC$_1$, PRH-15YA$_1$, PRH-15YA$_1$-L

| OPERATION RANGE | | PR-15YC$_1$ / PRH-15YA$_1$-L / PRH-15YA$_1$ | | | | | | | | | | | | | | | | | | | | | | | |
|---|---|---|---|---|---|---|---|---|---|---|---|---|---|---|---|---|---|---|---|---|---|---|---|---|---|
| | | OUTDOOR DB°C | | | | | | | | | | | | | | | | | | | | | | | |
| INDOOR | INDOOR | 20.0 | | | | 25.0 | | | | 30.0 | | | | 35.0 | | | | 40.0 | | | | 46.0 | | | |
| DB °C | WB °C | Q kW | SHCkW | SHF | T/I kW | Q kW | SHCkW | SHF | T/I kW | Q kW | SHCkW | SHF | T/I kW | Q kW | SHCkW | SHF | T/I kW | Q kW | SHCkW | SHF | T/I kW | Q kW | SHCkW | SHF | T/I kW |
| 20 | 15 | 44.5 | 32.0 | 0.72 | 13.9 | 43.3 | 31.2 | 0.72 | 14.5 | 42.0 | 30.7 | 0.73 | 15.2 | 40.8 | 30.2 | 0.74 | 15.9 | 39.5 | 29.6 | 0.75 | 16.6 | 37.8 | 29.1 | 0.77 | 17.5 |
| | 16 | 45.7 | 29.2 | 0.64 | 14.0 | 44.5 | 28.5 | 0.64 | 14.7 | 43.2 | 28.1 | 0.65 | 15.4 | 42.0 | 27.7 | 0.66 | 16.1 | 40.7 | 27.3 | 0.67 | 16.9 | 39.0 | 26.5 | 0.68 | 17.8 |
| | 17 | 47.2 | 26.0 | 0.55 | 14.1 | 46.0 | 25.3 | 0.55 | 14.9 | 44.7 | 25.0 | 0.56 | 15.6 | 43.3 | 24.7 | 0.57 | 16.3 | 41.9 | 23.9 | 0.57 | 17.1 | 40.1 | 23.3 | 0.58 | 18.1 |
| 22 | 15 | 44.5 | 37.8 | 0.85 | 13.9 | 43.3 | 37.2 | 0.86 | 14.5 | 42.0 | 36.5 | 0.87 | 15.2 | 40.8 | 35.9 | 0.88 | 15.9 | 39.5 | 35.2 | 0.89 | 16.6 | 37.8 | 34.4 | 0.91 | 17.5 |
| | 16 | 45.7 | 34.7 | 0.76 | 14.0 | 44.5 | 34.3 | 0.77 | 14.7 | 43.2 | 33.7 | 0.78 | 15.4 | 42.0 | 33.2 | 0.79 | 16.1 | 40.7 | 32.6 | 0.80 | 16.9 | 39.0 | 32.0 | 0.82 | 17.8 |
| | 17 | 47.2 | 31.6 | 0.67 | 14.1 | 46.0 | 31.3 | 0.68 | 14.9 | 44.7 | 30.8 | 0.69 | 15.6 | 43.3 | 30.3 | 0.70 | 16.3 | 41.9 | 29.7 | 0.71 | 17.1 | 40.1 | 28.9 | 0.72 | 18.1 |
| | 18 | 48.9 | 28.9 | 0.59 | 14.3 | 47.6 | 28.1 | 0.59 | 15.0 | 46.2 | 27.7 | 0.60 | 15.8 | 44.8 | 27.3 | 0.61 | 16.6 | 43.2 | 26.8 | 0.62 | 17.4 | 41.2 | 26.0 | 0.63 | 18.4 |
| | 19 | 50.5 | 26.3 | 0.52 | 14.5 | 49.2 | 25.6 | 0.52 | 15.2 | 47.8 | 25.3 | 0.53 | 16.0 | 46.3 | 24.5 | 0.53 | 16.8 | 44.7 | 24.1 | 0.54 | 17.7 | 42.6 | 23.4 | 0.55 | 18.7 |
| 24 | 16 | 45.7 | 40.2 | 0.88 | 14.0 | 44.5 | 39.6 | 0.89 | 14.7 | 43.2 | 39.3 | 0.91 | 15.4 | 42.0 | 39.1 | 0.93 | 16.1 | 40.7 | 38.7 | 0.95 | 16.9 | 39.0 | 37.8 | 0.97 | 17.8 |
| | 17 | 47.2 | 37.3 | 0.79 | 14.1 | 46.0 | 36.8 | 0.80 | 14.9 | 44.7 | 36.2 | 0.81 | 15.6 | 43.3 | 35.9 | 0.83 | 16.3 | 41.9 | 35.6 | 0.85 | 17.1 | 40.1 | 34.9 | 0.87 | 18.1 |
| | 18 | 48.9 | 34.7 | 0.71 | 14.3 | 47.6 | 34.3 | 0.72 | 15.0 | 46.2 | 33.7 | 0.73 | 15.8 | 44.8 | 33.2 | 0.74 | 16.6 | 43.2 | 32.4 | 0.75 | 17.4 | 41.2 | 31.7 | 0.77 | 18.4 |
| | 19 | 50.5 | 31.8 | 0.63 | 14.5 | 49.2 | 31.0 | 0.63 | 15.2 | 47.8 | 30.6 | 0.64 | 16.0 | 46.3 | 30.1 | 0.65 | 16.8 | 44.7 | 29.5 | 0.66 | 17.7 | 42.6 | 28.5 | 0.67 | 18.7 |
| | 20 | 52.1 | 28.7 | 0.55 | 14.6 | 50.7 | 27.9 | 0.55 | 15.4 | 49.3 | 27.6 | 0.56 | 16.2 | 47.7 | 27.2 | 0.57 | 17.0 | 46.1 | 26.7 | 0.58 | 17.9 | 44.1 | 26.0 | 0.59 | 19.0 |
| | 21 | 53.9 | 26.4 | 0.49 | 14.8 | 52.3 | 25.6 | 0.49 | 15.6 | 50.8 | 25.4 | 0.50 | 16.4 | 49.2 | 24.6 | 0.50 | 17.2 | 47.6 | 24.3 | 0.51 | 18.2 | 45.5 | 23.2 | 0.51 | 19.3 |
| 26 | 18 | 48.9 | 40.6 | 0.83 | 14.3 | 47.6 | 40.0 | 0.84 | 15.0 | 46.2 | 39.7 | 0.86 | 15.8 | 44.8 | 39.0 | 0.87 | 16.6 | 43.2 | 38.4 | 0.89 | 17.4 | 41.2 | 37.1 | 0.90 | 18.4 |
| | 19 | 50.5 | 37.4 | 0.74 | 14.5 | 49.2 | 36.9 | 0.75 | 15.2 | 47.8 | 36.3 | 0.76 | 16.0 | 46.3 | 35.7 | 0.77 | 16.8 | 44.7 | 34.9 | 0.78 | 17.7 | 42.6 | 34.1 | 0.80 | 18.7 |
| | 20 | 52.1 | 34.4 | 0.66 | 14.6 | 50.7 | 33.5 | 0.66 | 15.4 | 49.3 | 33.0 | 0.67 | 16.2 | 47.7 | 32.4 | 0.68 | 17.0 | 46.1 | 31.8 | 0.69 | 17.9 | 44.1 | 31.3 | 0.71 | 19.0 |
| | 21 | 53.9 | 31.8 | 0.59 | 14.8 | 52.3 | 30.9 | 0.59 | 15.6 | 50.8 | 30.5 | 0.60 | 16.4 | 49.2 | 30.0 | 0.61 | 17.2 | 47.6 | 29.5 | 0.62 | 18.2 | 45.5 | 28.7 | 0.63 | 19.3 |
| | 22 | 55.7 | 29.0 | 0.52 | 15.0 | 54.0 | 28.1 | 0.52 | 15.8 | 52.4 | 27.8 | 0.53 | 16.6 | 50.7 | 26.9 | 0.53 | 17.5 | 49.0 | 26.5 | 0.54 | 18.4 | 47.0 | 25.9 | 0.55 | 19.6 |
| | 23 | 57.3 | 25.8 | 0.45 | 15.1 | 55.7 | 25.1 | 0.45 | 16.0 | 54.0 | 24.3 | 0.45 | 16.8 | 52.3 | 24.1 | 0.46 | 17.7 | 50.5 | 23.2 | 0.46 | 18.6 | 48.4 | 22.7 | 0.47 | 19.8 |
| 28 | 19 | 50.5 | 43.4 | 0.86 | 14.5 | 49.2 | 42.8 | 0.87 | 15.2 | 47.8 | 42.1 | 0.88 | 16.0 | 46.3 | 41.2 | 0.89 | 16.8 | 44.7 | 40.7 | 0.91 | 17.7 | 42.6 | 39.6 | 0.93 | 18.7 |
| | 20 | 52.1 | 40.1 | 0.77 | 14.6 | 50.7 | 39.5 | 0.78 | 15.4 | 49.3 | 38.9 | 0.79 | 16.2 | 47.7 | 38.2 | 0.80 | 17.0 | 46.1 | 37.3 | 0.81 | 17.9 | 44.1 | 36.6 | 0.83 | 19.0 |
| | 21 | 53.9 | 37.2 | 0.69 | 14.8 | 52.3 | 36.6 | 0.70 | 15.6 | 50.8 | 36.1 | 0.71 | 16.4 | 49.2 | 35.4 | 0.72 | 17.2 | 47.6 | 34.7 | 0.73 | 18.2 | 45.5 | 34.1 | 0.75 | 19.3 |
| | 22 | 55.7 | 34.5 | 0.62 | 15.0 | 54.0 | 34.0 | 0.63 | 15.8 | 52.4 | 33.5 | 0.64 | 16.6 | 50.7 | 32.4 | 0.64 | 17.5 | 49.0 | 31.9 | 0.65 | 18.4 | 47.0 | 31.0 | 0.66 | 19.6 |
| | 23 | 57.3 | 31.5 | 0.55 | 15.1 | 55.7 | 31.2 | 0.56 | 16.0 | 54.0 | 30.2 | 0.56 | 16.8 | 52.3 | 29.8 | 0.57 | 17.7 | 50.5 | 28.8 | 0.57 | 18.6 | 48.4 | 28.1 | 0.58 | 19.8 |
| | 24 | 59.0 | 28.3 | 0.48 | 15.3 | 57.4 | 28.1 | 0.49 | 16.2 | 55.6 | 27.2 | 0.49 | 17.1 | 53.9 | 27.0 | 0.50 | 18.0 | 52.0 | 26.0 | 0.50 | 18.9 | 49.8 | 25.4 | 0.51 | 20.0 |
| 30 | 20 | 52.1 | 45.8 | 0.88 | 14.6 | 50.7 | 45.1 | 0.89 | 15.4 | 49.3 | 44.4 | 0.90 | 16.2 | 47.7 | 43.9 | 0.92 | 17.0 | 46.1 | 43.3 | 0.94 | 17.9 | 44.1 | 41.9 | 0.95 | 19.0 |
| | 21 | 53.9 | 43.1 | 0.80 | 14.8 | 52.3 | 42.4 | 0.81 | 15.6 | 50.8 | 41.7 | 0.82 | 16.4 | 49.2 | 41.3 | 0.84 | 17.2 | 47.6 | 40.9 | 0.86 | 18.2 | 45.5 | 40.0 | 0.88 | 19.3 |
| | 22 | 55.7 | 40.7 | 0.73 | 15.0 | 54.0 | 39.4 | 0.73 | 15.8 | 52.4 | 38.8 | 0.74 | 16.6 | 50.7 | 38.0 | 0.75 | 17.5 | 49.0 | 37.2 | 0.76 | 18.4 | 47.0 | 36.7 | 0.78 | 19.6 |
| | 23 | 57.3 | 37.2 | 0.65 | 15.1 | 55.7 | 36.2 | 0.65 | 16.0 | 54.0 | 35.6 | 0.66 | 16.8 | 52.3 | 35.0 | 0.67 | 17.7 | 50.5 | 34.3 | 0.68 | 18.6 | 48.4 | 33.9 | 0.70 | 19.8 |
| | 24 | 59.0 | 33.6 | 0.57 | 15.3 | 57.4 | 32.7 | 0.57 | 16.2 | 55.6 | 32.2 | 0.58 | 17.1 | 53.9 | 31.8 | 0.59 | 18.0 | 52.0 | 31.2 | 0.60 | 18.9 | 49.8 | 30.9 | 0.62 | 20.0 |

Note1.* Q:COOLING CAPACITY SHC:SENSIBLE HEAT CAPACITY T/I:TOTAL INPUT

# Factor for Various Air Flow

| PR-15YC$_1$ PRH-15YA$_1$ PRH-15YA$_1$-L | AIRVOLUME | CMM | 120 | 130 | 140 | 150 | 160 | 170 | 180 |
|---|---|---|---|---|---|---|---|---|---|
| | | L/S | 2,000 | 2,170 | 2,330 | 2,500 | 2,670 | 2,830 | 3,000 |
| COOLING | CAPACITY | | 0.944 | 0.955 | 0.966 | 0.978 | 0.981 | 1.0 | 1.011 |
| | TOTAL INPUT | | 0.980 | 0.984 | 0.988 | 0.992 | 0.996 | 1.0 | 1.005 |

# Cooling Capacity (Nominal Air Flow)
## (Use for low ambient temp. parts): PR-15YC$_1$, PRH-15YA$_1$, PRH-15YA$_1$-L

OPERATION RANGE: PR-15YC$_1$ ; PRH-15YA$_1$-L ; PRH-15YA$_1$

| INDOOR | INDOOR | OUTDOOR DB°C | | | | | | | | | | | | | | | | | | | |
|---|---|---|---|---|---|---|---|---|---|---|---|---|---|---|---|---|---|---|---|---|---|
| | | -5.0 | | | | 0.0 | | | | 5.0 | | | | 10.0 | | | | 15.0 | | | |
| DB°C | WB°C | Q kW | SHCkW | SHF | T/I kW | Q kW | SHCkW | SHF | T/I kW | Q kW | SHCkW | SHF | T/I kW | Q kW | SHCkW | SHF | T/I kW | Q kW | SHCkW | SHF | T/I kW |
| 20 | 15 | 47.6 | 33.8 | 0.71 | 12.4 | 47.2 | 33.5 | 0.71 | 12.5 | 46.8 | 33.2 | 0.71 | 12.7 | 46.2 | 33.3 | 0.72 | 13.0 | 45.4 | 32.7 | 0.72 | 13.4 |
| | 16 | 49.0 | 29.9 | 0.61 | 12.5 | 48.6 | 30.1 | 0.62 | 12.6 | 48.1 | 29.8 | 0.62 | 12.8 | 47.4 | 29.9 | 0.63 | 13.1 | 46.6 | 29.4 | 0.63 | 13.5 |
| | 17 | 50.9 | 27.0 | 0.53 | 12.6 | 50.5 | 26.8 | 0.53 | 12.7 | 49.9 | 26.4 | 0.53 | 12.9 | 49.2 | 27.1 | 0.55 | 13.2 | 48.3 | 26.6 | 0.55 | 13.6 |
| 22 | 15 | 47.6 | 39.5 | 0.83 | 12.4 | 47.2 | 39.2 | 0.83 | 12.5 | 46.8 | 38.8 | 0.83 | 12.7 | 46.2 | 38.8 | 0.84 | 13.0 | 45.4 | 38.1 | 0.84 | 13.4 |
| | 16 | 49.0 | 36.3 | 0.74 | 12.5 | 48.6 | 36.0 | 0.74 | 12.6 | 48.1 | 35.6 | 0.74 | 12.8 | 47.4 | 35.6 | 0.75 | 13.1 | 46.6 | 35.0 | 0.75 | 13.5 |
| | 17 | 50.9 | 33.6 | 0.66 | 12.6 | 50.5 | 33.3 | 0.66 | 12.7 | 49.9 | 32.9 | 0.66 | 12.9 | 49.2 | 33.0 | 0.67 | 13.2 | 48.3 | 32.4 | 0.67 | 13.6 |
| | 18 | 52.7 | 30.6 | 0.58 | 12.7 | 52.3 | 30.3 | 0.58 | 12.8 | 51.7 | 30.0 | 0.58 | 13.0 | 51.0 | 30.1 | 0.59 | 13.3 | 50.0 | 29.5 | 0.59 | 13.7 |
| | 19 | 54.7 | 27.9 | 0.51 | 12.8 | 54.2 | 27.6 | 0.51 | 12.9 | 53.6 | 27.3 | 0.51 | 13.1 | 52.8 | 27.5 | 0.52 | 13.4 | 51.7 | 26.9 | 0.52 | 13.8 |
| 24 | 16 | 49.0 | 42.1 | 0.86 | 12.5 | 48.6 | 42.3 | 0.87 | 12.6 | 48.1 | 41.8 | 0.87 | 12.8 | 47.4 | 41.7 | 0.88 | 13.1 | 46.6 | 41.0 | 0.88 | 13.5 |
| | 17 | 50.9 | 39.7 | 0.78 | 12.6 | 50.5 | 39.4 | 0.78 | 12.7 | 49.9 | 38.9 | 0.78 | 12.9 | 49.2 | 38.9 | 0.79 | 13.2 | 48.3 | 38.2 | 0.79 | 13.6 |
| | 18 | 52.7 | 36.9 | 0.70 | 12.7 | 52.3 | 36.6 | 0.70 | 12.8 | 51.7 | 36.2 | 0.70 | 13.0 | 51.0 | 36.2 | 0.71 | 13.3 | 50.0 | 35.5 | 0.71 | 13.7 |
| | 19 | 54.7 | 33.4 | 0.61 | 12.8 | 54.2 | 33.1 | 0.61 | 12.9 | 53.6 | 32.7 | 0.61 | 13.1 | 52.8 | 32.7 | 0.62 | 13.4 | 51.7 | 32.1 | 0.62 | 13.8 |
| | 20 | 56.7 | 30.6 | 0.54 | 12.9 | 56.2 | 30.3 | 0.54 | 13.0 | 55.5 | 30.0 | 0.54 | 13.2 | 54.6 | 30.0 | 0.55 | 13.6 | 53.5 | 29.4 | 0.55 | 14.0 |
| | 21 | 58.6 | 27.5 | 0.47 | 13.0 | 58.0 | 27.3 | 0.47 | 13.1 | 57.3 | 26.9 | 0.47 | 13.3 | 56.3 | 27.0 | 0.48 | 13.7 | 55.2 | 26.5 | 0.48 | 14.1 |
| 26 | 18 | 52.7 | 42.2 | 0.80 | 12.7 | 52.3 | 41.8 | 0.80 | 12.8 | 51.7 | 41.9 | 0.81 | 13.0 | 51.0 | 41.3 | 0.81 | 13.3 | 50.0 | 41.0 | 0.82 | 13.7 |
| | 19 | 54.7 | 38.8 | 0.71 | 12.8 | 54.2 | 38.5 | 0.71 | 12.9 | 53.6 | 38.6 | 0.72 | 13.1 | 52.8 | 38.0 | 0.72 | 13.4 | 51.7 | 37.7 | 0.73 | 13.8 |
| | 20 | 56.7 | 36.3 | 0.64 | 12.9 | 56.2 | 36.0 | 0.64 | 13.0 | 55.5 | 35.5 | 0.64 | 13.2 | 54.6 | 35.5 | 0.65 | 13.6 | 53.5 | 34.8 | 0.65 | 14.0 |
| | 21 | 58.6 | 33.4 | 0.57 | 13.0 | 58.0 | 33.1 | 0.57 | 13.1 | 57.3 | 32.7 | 0.57 | 13.3 | 56.3 | 32.7 | 0.58 | 13.7 | 55.2 | 32.0 | 0.58 | 14.1 |
| | 22 | 60.3 | 30.2 | 0.50 | 13.1 | 59.9 | 30.0 | 0.50 | 13.2 | 59.1 | 29.6 | 0.50 | 13.4 | 58.1 | 29.6 | 0.51 | 13.8 | 57.0 | 29.1 | 0.51 | 14.3 |
| | 23 | 62.4 | 27.5 | 0.44 | 13.2 | 61.8 | 27.2 | 0.44 | 13.3 | 61.0 | 26.8 | 0.44 | 13.5 | 60.0 | 27.0 | 0.45 | 13.9 | 58.8 | 26.5 | 0.45 | 14.4 |
| 28 | 19 | 54.7 | 44.9 | 0.82 | 12.8 | 54.2 | 44.4 | 0.82 | 12.9 | 53.6 | 44.5 | 0.83 | 13.1 | 52.8 | 44.4 | 0.84 | 13.4 | 51.7 | 43.9 | 0.85 | 13.8 |
| | 20 | 56.7 | 42.0 | 0.74 | 12.9 | 56.2 | 41.6 | 0.74 | 13.0 | 55.5 | 41.6 | 0.75 | 13.2 | 54.6 | 41.0 | 0.75 | 13.6 | 53.5 | 40.7 | 0.76 | 14.0 |
| | 21 | 58.6 | 39.3 | 0.67 | 13.0 | 58.0 | 38.9 | 0.67 | 13.1 | 57.3 | 39.0 | 0.68 | 13.3 | 56.3 | 38.3 | 0.68 | 13.7 | 55.2 | 38.1 | 0.69 | 14.1 |
| | 22 | 60.3 | 36.2 | 0.60 | 13.1 | 59.9 | 35.9 | 0.60 | 13.2 | 59.1 | 36.1 | 0.61 | 13.4 | 58.1 | 35.4 | 0.61 | 13.8 | 57.0 | 35.3 | 0.62 | 14.3 |
| | 23 | 62.4 | 33.1 | 0.53 | 13.2 | 61.8 | 32.8 | 0.53 | 13.3 | 61.0 | 32.9 | 0.54 | 13.5 | 60.0 | 32.4 | 0.54 | 13.9 | 58.8 | 32.3 | 0.55 | 14.4 |
| | 24 | 64.3 | 30.2 | 0.47 | 13.3 | 63.6 | 29.9 | 0.47 | 13.4 | 62.8 | 29.5 | 0.47 | 13.7 | 61.8 | 29.7 | 0.48 | 14.1 | 60.5 | 29.0 | 0.48 | 14.6 |
| 30 | 20 | 56.7 | 47.6 | 0.84 | 12.9 | 56.2 | 47.8 | 0.85 | 13.0 | 55.5 | 47.2 | 0.85 | 13.2 | 54.6 | 47.0 | 0.86 | 13.6 | 53.5 | 46.5 | 0.87 | 14.0 |
| | 21 | 58.6 | 44.5 | 0.76 | 13.0 | 58.0 | 44.7 | 0.77 | 13.1 | 57.3 | 44.1 | 0.77 | 13.3 | 56.3 | 43.9 | 0.78 | 13.7 | 55.2 | 43.6 | 0.79 | 14.1 |
| | 22 | 60.3 | 41.6 | 0.69 | 13.1 | 59.9 | 41.3 | 0.69 | 13.2 | 59.1 | 41.4 | 0.70 | 13.4 | 58.1 | 41.3 | 0.71 | 13.8 | 57.0 | 41.0 | 0.72 | 14.3 |
| | 23 | 62.4 | 38.7 | 0.62 | 13.2 | 61.8 | 38.3 | 0.62 | 13.3 | 61.0 | 37.8 | 0.62 | 13.5 | 60.0 | 37.8 | 0.63 | 13.9 | 58.8 | 37.6 | 0.64 | 14.4 |
| | 24 | 64.3 | 36.0 | 0.56 | 13.3 | 63.6 | 35.6 | 0.56 | 13.4 | 62.8 | 35.2 | 0.56 | 13.7 | 61.8 | 35.2 | 0.57 | 14.1 | 60.5 | 34.5 | 0.57 | 14.6 |

Note1.* Q:COOLING CAPACITY SHC:SENSIBLE HEAT CAPACITY T/I:TOTAL INPUT

# Heating Capacity
## (Nominal Air Flow): PPRH-15YA$_1$, PRH-15YA$_1$-L

OPERATION RANGE: PRH-15YA$_1$-L ; PRH-15YA$_1$

| INDOOR | OUTDOOR WB°C | | | | | |
|---|---|---|---|---|---|---|
| | -10.0 | | -5.0 | | 0.0 | |
| DB°C | Q kW | T/I kW | Q kW | T/I kW | Q kW | T/I kW |
| 15 | 31.0 | 10.7 | 35.1 | 11.4 | 39.9 | 12.2 |
| 16 | 30.8 | 10.7 | 34.9 | 11.4 | 39.7 | 12.3 |
| 17 | 30.6 | 10.8 | 34.7 | 11.5 | 39.5 | 12.4 |
| 18 | 30.4 | 10.8 | 34.5 | 11.5 | 39.3 | 12.5 |
| 19 | 30.2 | 10.9 | 34.4 | 11.6 | 39.2 | 12.6 |
| 20 | 30.1 | 10.9 | 34.3 | 11.7 | 39.0 | 12.7 |
| 21 | 29.9 | 11.0 | 34.1 | 11.7 | 38.9 | 12.8 |
| 22 | 29.8 | 11.0 | 34.0 | 11.8 | 38.8 | 12.8 |
| 23 | 29.6 | 11.1 | 33.8 | 11.8 | 38.7 | 12.9 |
| 24 | 29.5 | 11.1 | 33.7 | 11.9 | 38.5 | 13.0 |
| 25 | 29.4 | 11.2 | 33.6 | 12.0 | 38.4 | 13.1 |
| 26 | 29.3 | 11.2 | 33.5 | 12.1 | 38.2 | 13.2 |
| 27 | 29.1 | 11.3 | 33.3 | 12.2 | 38.0 | 13.3 |

OPERATION RANGE: PRH-15YA$_1$-L ; PRH-15YA$_1$

| INDOOR | OUTDOOR WB°C | | | | | |
|---|---|---|---|---|---|---|
| | 5.0 | | 10.0 | | 15.0 | |
| DB°C | Q kW | T/I kW | Q kW | T/I kW | Q kW | T/I kW |
| 15 | 45.4 | 13.2 | 51.6 | 14.3 | 58.8 | 15.5 |
| 16 | 45.2 | 13.3 | 51.4 | 14.4 | 58.6 | 15.7 |
| 17 | 45.0 | 13.4 | 51.2 | 14.6 | 58.3 | 15.8 |
| 18 | 44.8 | 13.5 | 51.0 | 14.7 | 58.1 | 16.0 |
| 19 | 44.6 | 13.6 | 50.8 | 14.8 | 57.8 | 16.2 |
| 20 | 44.5 | 13.8 | 50.6 | 15.0 | 57.6 | 16.3 |
| 21 | 44.3 | 13.9 | 50.5 | 15.1 | 57.4 | 16.5 |
| 22 | 44.2 | 14.0 | 50.3 | 15.2 | 57.2 | 16.6 |
| 23 | 44.1 | 14.1 | 50.2 | 15.3 | 57.0 | 16.8 |
| 24 | 43.9 | 14.2 | 50.0 | 15.5 | 56.7 | 16.9 |
| 25 | 43.8 | 14.3 | 49.8 | 15.6 | 56.5 | 17.1 |
| 26 | 43.6 | 14.4 | 49.6 | 15.7 | 56.2 | 17.3 |
| 27 | 43.4 | 14.5 | 49.4 | 15.9 | 56.0 | 17.4 |

* Q:HEATING CAPACITY T/I:TOTAL INPUT

# Factor for Various Air Flow

| PR-15YC$_1$ PRH-15YA$_1$ PRH-15YA$_1$-L | AIR VOLUME | CMM | 120 | 130 | 140 | 150 | 160 | 170 | 180 |
|---|---|---|---|---|---|---|---|---|---|
| | | L/S | 2,000 | 2,170 | 2,330 | 2,500 | 2,670 | 2,830 | 3,000 |
| COOLING | CAPACITY | | 0.944 | 0.955 | 0.966 | 0.978 | 0.981 | 1.0 | 1.011 |
| | TOTAL INPUT | | 0.980 | 0.984 | 0.988 | 0.992 | 0.996 | 1.0 | 1.005 |

# Factor for Various Air Flow

| PRH-15YA$_1$ PRH-15YA$_1$-L | AIR VOLUME | CMM | 120 | 130 | 140 | 150 | 160 | 170 | 180 |
|---|---|---|---|---|---|---|---|---|---|
| | | L/S | 2,000 | 2,170 | 2,330 | 2,500 | 2,670 | 2,830 | 3,000 |
| HEATING | CAPACITY | | 0.976 | 0.981 | 0.986 | 0.990 | 0.995 | 1.0 | 1.004 |
| | TOTAL INPUT | | 1.070 | 1.056 | 1.042 | 1.028 | 1.014 | 1.0 | 0.991 |

# Cooling Capacity (Nominal Air Flow):PR-20YC$_1$, PRH-20YA$_1$, PRH-20YA$_1$-L

| OPERATION RANGE | | PR-20YC$_1$ / PRH-20YA$_1$-L / PRH-20YA$_1$ | | | | | | | | | | | | | | | | | | | | | | | |
|---|---|---|---|---|---|---|---|---|---|---|---|---|---|---|---|---|---|---|---|---|---|---|---|---|---|
| | | OUTDOOR DB°C | | | | | | | | | | | | | | | | | | | | | | | |
| INDOOR | INDOOR | 20.0 | | | | 25.0 | | | | 30.0 | | | | 35.0 | | | | 40.0 | | | | 46.0 | | | |
| DB °C | WB °C | Q kW | SHCkW | SHF | T/I kW | Q kW | SHCkW | SHF | T/I kW | Q kW | SHCkW | SHF | T/I kW | Q kW | SHCkW | SHF | T/I kW | Q kW | SHCkW | SHF | T/I kW | Q kW | SHCkW | SHF | T/I kW |
| 20 | 15 | 59.3 | 42.7 | 0.72 | 18.7 | 57.4 | 41.9 | 0.73 | 19.5 | 55.4 | 40.4 | 0.73 | 20.3 | 53.4 | 39.5 | 0.74 | 21.3 | 51.4 | 38.6 | 0.75 | 22.3 | 48.8 | 37.6 | 0.77 | 23.6 |
| | 16 | 61.3 | 39.2 | 0.64 | 19.0 | 59.5 | 38.1 | 0.64 | 19.8 | 57.6 | 37.4 | 0.65 | 20.7 | 55.5 | 36.1 | 0.65 | 21.7 | 53.2 | 35.1 | 0.66 | 22.7 | 50.4 | 34.3 | 0.68 | 24.0 |
| | 17 | 63.2 | 34.8 | 0.55 | 19.1 | 61.2 | 33.7 | 0.55 | 20.0 | 59.2 | 33.2 | 0.56 | 21.0 | 57.0 | 31.9 | 0.56 | 22.0 | 54.8 | 31.2 | 0.57 | 23.1 | 51.9 | 30.1 | 0.58 | 24.5 |
| 22 | 15 | 59.3 | 50.4 | 0.85 | 18.7 | 57.4 | 49.4 | 0.86 | 19.5 | 55.4 | 48.2 | 0.87 | 20.3 | 53.4 | 47.0 | 0.88 | 21.3 | 51.4 | 46.3 | 0.90 | 22.3 | 48.8 | 44.9 | 0.92 | 23.6 |
| | 16 | 61.3 | 46.6 | 0.76 | 19.0 | 59.5 | 45.8 | 0.77 | 19.8 | 57.6 | 44.9 | 0.78 | 20.7 | 55.5 | 43.8 | 0.79 | 21.7 | 53.2 | 43.1 | 0.81 | 22.7 | 50.4 | 41.8 | 0.83 | 24.0 |
| | 17 | 63.2 | 43.0 | 0.68 | 19.1 | 61.2 | 41.6 | 0.68 | 20.0 | 59.2 | 40.8 | 0.69 | 21.0 | 57.0 | 39.9 | 0.70 | 22.0 | 54.8 | 38.9 | 0.71 | 23.1 | 51.9 | 37.9 | 0.73 | 24.5 |
| | 18 | 65.0 | 39.0 | 0.60 | 19.3 | 63.0 | 37.8 | 0.60 | 20.3 | 60.9 | 37.1 | 0.61 | 21.3 | 58.7 | 35.8 | 0.61 | 22.4 | 56.4 | 35.0 | 0.62 | 23.5 | 53.4 | 33.6 | 0.63 | 24.9 |
| | 19 | 67.0 | 34.8 | 0.52 | 19.5 | 64.9 | 34.4 | 0.53 | 20.5 | 62.7 | 33.2 | 0.53 | 21.6 | 60.8 | 32.2 | 0.53 | 22.7 | 58.0 | 31.3 | 0.54 | 23.9 | 54.9 | 29.6 | 0.54 | 25.3 |
| 24 | 16 | 61.3 | 54.6 | 0.89 | 19.0 | 59.5 | 53.6 | 0.90 | 19.8 | 57.6 | 53.0 | 0.92 | 20.7 | 55.5 | 51.6 | 0.93 | 21.7 | 53.2 | 50.5 | 0.95 | 22.7 | 50.4 | 49.4 | 0.98 | 24.0 |
| | 17 | 63.2 | 50.6 | 0.80 | 19.1 | 61.2 | 49.6 | 0.81 | 20.0 | 59.2 | 48.5 | 0.82 | 21.0 | 57.0 | 47.3 | 0.83 | 22.0 | 54.8 | 46.6 | 0.85 | 23.1 | 51.9 | 45.7 | 0.88 | 24.5 |
| | 18 | 65.0 | 46.2 | 0.71 | 19.3 | 63.0 | 45.4 | 0.72 | 20.3 | 60.9 | 44.5 | 0.73 | 21.3 | 58.7 | 43.4 | 0.74 | 22.4 | 56.4 | 42.3 | 0.75 | 23.5 | 53.4 | 41.7 | 0.78 | 24.9 |
| | 19 | 67.0 | 42.2 | 0.63 | 19.5 | 64.9 | 41.5 | 0.64 | 20.5 | 62.7 | 40.8 | 0.65 | 21.6 | 60.8 | 40.1 | 0.66 | 22.7 | 58.0 | 38.9 | 0.67 | 23.9 | 54.9 | 37.3 | 0.68 | 25.3 |
| | 20 | 69.0 | 38.0 | 0.55 | 19.8 | 66.8 | 37.4 | 0.56 | 20.8 | 64.6 | 36.8 | 0.57 | 21.9 | 62.2 | 35.5 | 0.57 | 23.1 | 59.7 | 34.6 | 0.58 | 24.3 | 56.5 | 33.3 | 0.59 | 25.7 |
| | 21 | 71.2 | 34.2 | 0.48 | 20.0 | 68.9 | 33.8 | 0.49 | 21.2 | 66.6 | 32.6 | 0.49 | 22.3 | 64.0 | 32.0 | 0.50 | 23.5 | 61.4 | 31.3 | 0.51 | 24.7 | 58.2 | 30.3 | 0.52 | 26.2 |
| 26 | 18 | 65.0 | 54.0 | 0.83 | 19.3 | 63.0 | 52.9 | 0.84 | 20.3 | 60.9 | 51.8 | 0.85 | 21.3 | 58.7 | 51.1 | 0.87 | 22.4 | 56.4 | 50.2 | 0.89 | 23.5 | 53.4 | 48.6 | 0.91 | 24.9 |
| | 19 | 67.0 | 49.6 | 0.74 | 19.5 | 64.9 | 48.7 | 0.75 | 20.5 | 62.7 | 47.7 | 0.76 | 21.6 | 60.8 | 46.8 | 0.77 | 22.7 | 58.0 | 45.8 | 0.79 | 23.9 | 54.9 | 44.5 | 0.81 | 25.3 |
| | 20 | 69.0 | 45.5 | 0.66 | 19.8 | 66.8 | 44.8 | 0.67 | 20.8 | 64.6 | 43.9 | 0.68 | 21.9 | 62.2 | 42.9 | 0.69 | 23.1 | 59.7 | 41.8 | 0.70 | 24.3 | 56.5 | 40.7 | 0.72 | 25.7 |
| | 21 | 71.2 | 42.0 | 0.59 | 20.0 | 68.9 | 41.3 | 0.60 | 21.2 | 66.6 | 40.6 | 0.61 | 22.3 | 64.0 | 39.7 | 0.62 | 23.5 | 61.4 | 38.7 | 0.63 | 24.7 | 58.2 | 37.8 | 0.65 | 26.2 |
| | 22 | 73.4 | 38.2 | 0.52 | 20.3 | 71.0 | 37.6 | 0.53 | 21.5 | 68.6 | 37.0 | 0.54 | 22.7 | 66.0 | 35.6 | 0.54 | 23.9 | 63.3 | 34.8 | 0.55 | 25.2 | 59.8 | 33.5 | 0.56 | 26.8 |
| | 23 | 75.7 | 34.1 | 0.45 | 20.6 | 73.3 | 33.0 | 0.45 | 21.8 | 70.8 | 32.6 | 0.46 | 23.1 | 68.0 | 31.3 | 0.46 | 24.4 | 65.0 | 30.6 | 0.47 | 25.6 | 61.1 | 28.7 | 0.47 | 27.3 |
| 28 | 19 | 67.0 | 57.0 | 0.85 | 19.5 | 64.9 | 55.8 | 0.86 | 20.5 | 62.7 | 54.5 | 0.87 | 21.6 | 60.8 | 54.1 | 0.89 | 22.7 | 58.0 | 52.8 | 0.91 | 23.9 | 54.9 | 52.2 | 0.95 | 25.3 |
| | 20 | 69.0 | 53.1 | 0.77 | 19.8 | 66.8 | 52.1 | 0.78 | 20.8 | 64.6 | 51.0 | 0.79 | 21.9 | 62.2 | 50.4 | 0.81 | 23.1 | 59.7 | 49.6 | 0.83 | 24.3 | 56.5 | 48.0 | 0.85 | 25.7 |
| | 21 | 71.2 | 49.8 | 0.70 | 20.0 | 68.9 | 48.9 | 0.71 | 21.2 | 66.6 | 48.0 | 0.72 | 22.3 | 64.0 | 46.7 | 0.73 | 23.5 | 61.4 | 45.4 | 0.74 | 24.7 | 58.2 | 44.2 | 0.76 | 26.2 |
| | 22 | 73.4 | 45.5 | 0.62 | 20.3 | 71.0 | 44.7 | 0.63 | 21.5 | 68.6 | 43.9 | 0.64 | 22.7 | 66.0 | 42.9 | 0.65 | 23.9 | 63.3 | 41.8 | 0.66 | 25.2 | 59.8 | 40.7 | 0.68 | 26.8 |
| | 23 | 75.7 | 41.6 | 0.55 | 20.6 | 73.3 | 41.0 | 0.56 | 21.8 | 70.8 | 39.6 | 0.56 | 23.1 | 68.0 | 38.8 | 0.57 | 24.4 | 65.0 | 37.7 | 0.58 | 25.6 | 61.1 | 36.7 | 0.60 | 27.3 |
| | 24 | 78.0 | 37.4 | 0.48 | 20.9 | 75.6 | 37.0 | 0.49 | 22.2 | 72.8 | 35.7 | 0.49 | 23.5 | 69.9 | 35.0 | 0.50 | 24.8 | 66.7 | 34.0 | 0.51 | 26.2 | 62.5 | 32.5 | 0.52 | 27.8 |
| 30 | 20 | 69.0 | 60.0 | 0.87 | 19.8 | 66.8 | 58.8 | 0.88 | 20.8 | 64.6 | 58.1 | 0.90 | 21.9 | 62.2 | 57.2 | 0.92 | 23.1 | 59.7 | 56.1 | 0.94 | 24.3 | 56.5 | 55.4 | 0.98 | 25.7 |
| | 21 | 71.2 | 56.2 | 0.79 | 20.0 | 68.9 | 55.1 | 0.80 | 21.2 | 66.6 | 54.6 | 0.82 | 22.3 | 64.0 | 53.8 | 0.84 | 23.5 | 61.4 | 52.8 | 0.86 | 24.7 | 58.2 | 51.8 | 0.89 | 26.2 |
| | 22 | 73.4 | 52.1 | 0.71 | 20.3 | 71.0 | 51.1 | 0.72 | 21.5 | 68.6 | 50.1 | 0.73 | 22.7 | 66.0 | 49.5 | 0.75 | 23.9 | 63.3 | 48.7 | 0.77 | 25.2 | 59.8 | 47.8 | 0.80 | 26.8 |
| | 23 | 75.7 | 48.4 | 0.64 | 20.6 | 73.3 | 47.6 | 0.65 | 21.8 | 70.8 | 46.7 | 0.66 | 23.1 | 68.0 | 45.6 | 0.67 | 24.4 | 65.0 | 44.9 | 0.69 | 25.6 | 61.1 | 43.4 | 0.71 | 27.3 |
| | 24 | 78.0 | 44.5 | 0.57 | 20.9 | 75.6 | 43.8 | 0.58 | 22.2 | 72.8 | 43.0 | 0.59 | 23.5 | 69.9 | 41.9 | 0.60 | 24.8 | 66.7 | 41.4 | 0.62 | 26.2 | 62.5 | 40.0 | 0.64 | 27.8 |

Note1.* Q:COOLING CAPACITY SHC:SENSIBLE HEAT CAPACITY T/I:TOTAL INPUT

# Factor for Various Air Flow

| PR-20YC$_1$ PRH-20YA$_1$ PRH-20YA$_1$-L | AIR VOLUME | CMM | 170 | 180 | 190 | 200 | 210 | 220 |
|---|---|---|---|---|---|---|---|---|
| | | L/S | 2,830 | 3,000 | 3,160 | 3,330 | 3,500 | 3,670 |
| COOLING | CAPACITY | | 0.980 | 0.990 | 1.0 | 1.008 | 1.017 | 1.025 |
| | TOTAL INPUT | | 0.990 | 0.995 | 1.0 | 1.003 | 1.007 | 1.010 |

# Cooling Capacity (Nominal Air Flow)
## (Use for low ambient temp. parts): PR-20YC$_1$, PRH-20YA$_1$, PRH-20YA$_1$-L

| OPERATION RANGE | | PR-20YC$_1$ | | | | | | | | | | | | | | | | | | | |
|---|---|---|---|---|---|---|---|---|---|---|---|---|---|---|---|---|---|---|---|---|---|
| | | PRH-20YA$_1$-L | | | | | | | | | | | | | | | | | | | |
| | | PRH-20YA$_1$ | | | | | | | | | | | | | | | | | | | |
| | | OUTDOOR DB°C | | | | | | | | | | | | | | | | | | | |
| INDOOR | INDOOR | -5.0 | | | | 0.0 | | | | 5.0 | | | | 10.0 | | | | 15.0 | | | |
| DB°C | WB°C | Q kW | SHCkW | SHF | T/I kW | Q kW | SHCkW | SHF | T/I kW | Q kW | SHCkW | SHF | T/I kW | Q kW | SHCkW | SHF | T/I kW | Q kW | SHCkW | SHF | T/I kW |
| 20 | 15 | 64.2 | 44.9 | 0.70 | 16.7 | 63.9 | 44.7 | 0.70 | 16.9 | 63.2 | 44.2 | 0.70 | 17.2 | 62.3 | 43.6 | 0.70 | 17.6 | 61.0 | 43.3 | 0.71 | 18.1 |
| | 16 | 66.2 | 41.0 | 0.62 | 16.9 | 65.9 | 40.9 | 0.62 | 17.1 | 65.2 | 40.4 | 0.62 | 17.4 | 64.2 | 40.4 | 0.63 | 17.8 | 62.8 | 39.6 | 0.63 | 18.3 |
| | 17 | 68.4 | 37.6 | 0.55 | 17.0 | 68.0 | 37.4 | 0.55 | 17.2 | 67.2 | 37.0 | 0.55 | 17.5 | 66.2 | 36.4 | 0.55 | 17.9 | 64.7 | 35.6 | 0.55 | 18.4 |
| 22 | 15 | 64.2 | 52.6 | 0.82 | 16.7 | 63.9 | 52.4 | 0.82 | 16.9 | 63.2 | 52.5 | 0.83 | 17.2 | 62.3 | 51.7 | 0.83 | 17.6 | 61.0 | 51.2 | 0.84 | 18.1 |
| | 16 | 66.2 | 49.0 | 0.74 | 16.9 | 65.9 | 48.8 | 0.74 | 17.1 | 65.2 | 48.9 | 0.75 | 17.4 | 64.2 | 48.2 | 0.75 | 17.8 | 62.8 | 47.7 | 0.76 | 18.3 |
| | 17 | 68.4 | 45.1 | 0.66 | 17.0 | 68.0 | 44.9 | 0.66 | 17.2 | 67.2 | 44.4 | 0.66 | 17.5 | 66.2 | 44.4 | 0.67 | 17.9 | 64.7 | 43.3 | 0.67 | 18.4 |
| | 18 | 70.6 | 40.9 | 0.58 | 17.2 | 70.0 | 40.6 | 0.58 | 17.3 | 69.3 | 40.2 | 0.58 | 17.6 | 68.2 | 40.2 | 0.59 | 18.0 | 66.6 | 39.3 | 0.59 | 18.6 |
| | 19 | 72.9 | 37.2 | 0.51 | 17.4 | 72.4 | 36.9 | 0.51 | 17.5 | 71.4 | 36.4 | 0.51 | 17.8 | 70.2 | 36.5 | 0.52 | 18.2 | 68.7 | 35.7 | 0.52 | 18.8 |
| 24 | 16 | 66.2 | 56.3 | 0.85 | 16.9 | 65.9 | 56.0 | 0.85 | 17.1 | 65.2 | 56.1 | 0.86 | 17.4 | 64.2 | 55.9 | 0.87 | 17.8 | 62.8 | 55.3 | 0.88 | 18.3 |
| | 17 | 68.4 | 52.7 | 0.77 | 17.0 | 68.0 | 52.4 | 0.77 | 17.2 | 67.2 | 52.4 | 0.78 | 17.5 | 66.2 | 51.6 | 0.78 | 17.9 | 64.7 | 51.1 | 0.79 | 18.4 |
| | 18 | 70.6 | 48.7 | 0.69 | 17.2 | 70.0 | 48.3 | 0.69 | 17.3 | 69.3 | 48.5 | 0.70 | 17.6 | 68.2 | 47.7 | 0.70 | 18.0 | 66.6 | 47.3 | 0.71 | 18.6 |
| | 19 | 72.9 | 44.5 | 0.61 | 17.4 | 72.4 | 44.2 | 0.61 | 17.5 | 71.4 | 44.3 | 0.62 | 17.8 | 70.2 | 43.5 | 0.62 | 18.2 | 68.7 | 43.3 | 0.63 | 18.8 |
| | 20 | 75.3 | 40.7 | 0.54 | 17.5 | 74.8 | 40.4 | 0.54 | 17.6 | 73.7 | 39.8 | 0.54 | 17.9 | 72.6 | 39.9 | 0.55 | 18.4 | 71.0 | 39.1 | 0.55 | 19.0 |
| | 21 | 77.8 | 36.6 | 0.47 | 17.7 | 77.2 | 36.3 | 0.47 | 17.8 | 76.0 | 35.7 | 0.47 | 18.1 | 75.0 | 36.0 | 0.48 | 18.6 | 73.3 | 35.2 | 0.48 | 19.2 |
| 26 | 18 | 70.6 | 55.8 | 0.79 | 17.2 | 70.0 | 55.3 | 0.79 | 17.3 | 69.3 | 55.4 | 0.80 | 17.6 | 68.2 | 55.2 | 0.81 | 18.0 | 66.6 | 54.6 | 0.82 | 18.6 |
| | 19 | 72.9 | 51.8 | 0.71 | 17.4 | 72.4 | 51.4 | 0.71 | 17.5 | 71.4 | 51.4 | 0.72 | 17.8 | 70.2 | 50.5 | 0.72 | 18.2 | 68.7 | 50.2 | 0.73 | 18.8 |
| | 20 | 75.3 | 48.2 | 0.64 | 17.5 | 74.8 | 47.9 | 0.64 | 17.6 | 73.7 | 47.9 | 0.65 | 17.9 | 72.6 | 47.2 | 0.65 | 18.4 | 71.0 | 46.9 | 0.66 | 19.0 |
| | 21 | 77.8 | 44.3 | 0.57 | 17.7 | 77.2 | 44.0 | 0.57 | 17.8 | 76.0 | 44.1 | 0.58 | 18.1 | 75.0 | 43.5 | 0.58 | 18.6 | 73.3 | 43.2 | 0.59 | 19.2 |
| | 22 | 80.4 | 40.2 | 0.50 | 17.8 | 79.6 | 39.8 | 0.50 | 17.9 | 78.8 | 40.2 | 0.51 | 18.3 | 77.4 | 39.5 | 0.51 | 18.8 | 75.6 | 39.3 | 0.52 | 19.5 |
| | 23 | 83.0 | 36.5 | 0.44 | 18.0 | 82.4 | 36.3 | 0.44 | 18.1 | 81.2 | 35.7 | 0.44 | 18.5 | 79.8 | 35.9 | 0.45 | 19.0 | 78.0 | 35.1 | 0.45 | 19.7 |
| 28 | 19 | 72.9 | 59.0 | 0.81 | 17.4 | 72.4 | 58.6 | 0.81 | 17.5 | 71.4 | 58.5 | 0.82 | 17.8 | 70.2 | 58.3 | 0.83 | 18.2 | 68.7 | 57.7 | 0.84 | 18.8 |
| | 20 | 75.3 | 55.0 | 0.73 | 17.5 | 74.8 | 54.6 | 0.73 | 17.6 | 73.7 | 54.5 | 0.74 | 17.9 | 72.6 | 54.5 | 0.75 | 18.4 | 71.0 | 54.0 | 0.76 | 19.0 |
| | 21 | 77.8 | 51.3 | 0.66 | 17.7 | 77.2 | 51.0 | 0.66 | 17.8 | 76.0 | 50.9 | 0.67 | 18.1 | 75.0 | 51.0 | 0.68 | 18.6 | 73.3 | 50.6 | 0.69 | 19.2 |
| | 22 | 80.4 | 47.4 | 0.59 | 17.8 | 79.6 | 47.8 | 0.60 | 17.9 | 78.8 | 48.1 | 0.61 | 18.3 | 77.4 | 47.2 | 0.61 | 18.8 | 75.6 | 46.9 | 0.62 | 19.5 |
| | 23 | 83.0 | 44.0 | 0.53 | 18.0 | 82.4 | 43.7 | 0.53 | 18.1 | 81.2 | 43.8 | 0.54 | 18.5 | 79.8 | 43.1 | 0.54 | 19.0 | 78.0 | 42.9 | 0.55 | 19.7 |
| | 24 | 85.6 | 40.2 | 0.47 | 18.1 | 84.8 | 39.9 | 0.47 | 18.3 | 83.6 | 39.3 | 0.47 | 18.7 | 82.2 | 39.5 | 0.48 | 19.2 | 80.4 | 38.6 | 0.48 | 20.0 |
| 30 | 20 | 75.3 | 62.5 | 0.83 | 17.5 | 74.8 | 62.1 | 0.83 | 17.6 | 73.7 | 61.9 | 0.84 | 17.9 | 72.6 | 61.7 | 0.85 | 18.4 | 71.0 | 61.1 | 0.86 | 19.0 |
| | 21 | 77.8 | 59.1 | 0.76 | 17.7 | 77.2 | 58.7 | 0.76 | 17.8 | 76.0 | 58.5 | 0.77 | 18.1 | 75.0 | 57.8 | 0.77 | 18.6 | 73.3 | 57.2 | 0.78 | 19.2 |
| | 22 | 80.4 | 55.5 | 0.69 | 17.8 | 79.6 | 54.9 | 0.69 | 17.9 | 78.8 | 55.2 | 0.70 | 18.3 | 77.4 | 54.2 | 0.70 | 18.8 | 75.6 | 53.7 | 0.71 | 19.5 |
| | 23 | 83.0 | 51.5 | 0.62 | 18.0 | 82.4 | 51.1 | 0.62 | 18.1 | 81.2 | 51.2 | 0.63 | 18.5 | 79.8 | 50.3 | 0.63 | 19.0 | 78.0 | 49.9 | 0.64 | 19.7 |
| | 24 | 85.6 | 47.1 | 0.55 | 18.1 | 84.8 | 47.5 | 0.56 | 18.3 | 83.6 | 46.8 | 0.56 | 18.7 | 82.2 | 46.9 | 0.57 | 19.2 | 80.4 | 45.8 | 0.57 | 20.0 |

Note1.* Q:COOLING CAPACITY SHC:SENSIBLE HEAT CAPACITY T/I:TOTAL INPUT

# Heating Capacity
## (Nominal Air Flow): PRH-20YA$_1$, PRH-20YA$_1$-L

| OPERATION RANGE | PRH-20YA$_1$-L | | | | | |
|---|---|---|---|---|---|---|
| | | | | PRH-20YA$_1$ | | |
| | OUTDOOR WB°C | | | | | |
| INDOOR | -10.0 | | -5.0 | | 0.0 | |
| DB°C | Q kW | T/I kW | Q kW | T/I kW | Q kW | T/I kW |
| 15 | 41.2 | 14.3 | 46.9 | 15.4 | 53.5 | 16.7 |
| 16 | 40.9 | 14.3 | 46.7 | 15.5 | 53.3 | 16.8 |
| 17 | 40.6 | 14.4 | 46.5 | 15.6 | 53.1 | 16.9 |
| 18 | 40.4 | 14.5 | 46.3 | 15.7 | 52.8 | 17.0 |
| 19 | 40.2 | 14.6 | 46.1 | 15.8 | 52.6 | 17.1 |
| 20 | 40.0 | 14.7 | 45.9 | 15.9 | 52.4 | 17.2 |
| 21 | 39.8 | 14.7 | 45.7 | 16.0 | 52.2 | 17.3 |
| 22 | 39.6 | 14.8 | 45.5 | 16.1 | 52.0 | 17.4 |
| 23 | 39.4 | 14.9 | 45.3 | 16.2 | 51.8 | 17.6 |
| 24 | 39.2 | 15.0 | 45.1 | 16.3 | 51.6 | 17.7 |
| 25 | 39.1 | 15.0 | 44.9 | 16.3 | 51.4 | 17.8 |
| 26 | 38.9 | 15.1 | 44.7 | 16.4 | 51.2 | 17.9 |
| 27 | 38.6 | 15.2 | 44.4 | 16.5 | 50.9 | 18.0 |

| OPERATION RANGE | PRH-20YA$_1$-L | | | | | |
|---|---|---|---|---|---|---|
| | PRH-20YA$_1$ | | | | | |
| | OUTDOOR WB°C | | | | | |
| INDOOR | 5.0 | | 10.0 | | 15.0 | |
| DB°C | Q kW | T/I kW | Q kW | T/I kW | Q kW | T/I kW |
| 15 | 60.9 | 18.1 | 69.4 | 19.8 | 78.8 | 21.7 |
| 16 | 60.6 | 18.3 | 69.1 | 20.0 | 78.5 | 21.9 |
| 17 | 60.4 | 18.4 | 68.8 | 20.2 | 78.2 | 22.1 |
| 18 | 60.2 | 18.6 | 68.5 | 20.3 | 77.9 | 22.3 |
| 19 | 60.0 | 18.7 | 68.3 | 20.5 | 77.6 | 22.5 |
| 20 | 59.8 | 18.8 | 68.0 | 20.6 | 77.3 | 22.7 |
| 21 | 59.6 | 19.0 | 67.8 | 20.8 | 77.0 | 22.9 |
| 22 | 59.4 | 19.1 | 67.6 | 21.0 | 76.6 | 23.1 |
| 23 | 59.2 | 19.2 | 67.3 | 21.2 | 76.3 | 23.3 |
| 24 | 59.0 | 19.4 | 67.0 | 21.4 | 76.0 | 23.6 |
| 25 | 58.7 | 19.5 | 66.7 | 21.5 | 75.6 | 23.8 |
| 26 | 58.4 | 19.7 | 66.4 | 21.7 | 75.3 | 24.1 |
| 27 | 58.1 | 19.8 | 66.1 | 21.9 | 75.0 | 24.3 |

* Q:HEATING CAPACITY T/I:TOTAL INPUT

# Factor for Various Air Flow

| PR-20YC$_1$ PRH-20YA$_1$ PRH-20YA$_1$-L | AIR VOLUME | CMM | 170 | 180 | 190 | 200 | 210 | 220 |
|---|---|---|---|---|---|---|---|---|
| | | L/S | 2,830 | 3,000 | 3,160 | 3,330 | 3,500 | 3,670 |
| COOLING | CAPACITY | | 0.980 | 0.990 | 1.0 | 1.008 | 1.017 | 1.025 |
| | TOTAL INPUT | | 0.990 | 0.995 | 1.0 | 1.003 | 1.007 | 1.010 |

# Factor for Various Air Flow

| PRH-20YA$_1$ PRH-20YA$_1$-L | AIR VOLUME | CMM | 170 | 180 | 190 | 200 | 210 | 220 |
|---|---|---|---|---|---|---|---|---|
| | | L/S | 2,830 | 3,000 | 3,160 | 3,330 | 3,500 | 3,670 |
| HEATING | CAPACITY | | 0.990 | 0.995 | 1.0 | 1.003 | 1.007 | 1.010 |
| | TOTAL INPUT | | 1.025 | 1.013 | 1.0 | 0.993 | 0.987 | 0.980 |

## Operation range

### PR-YC1

**Cooling**

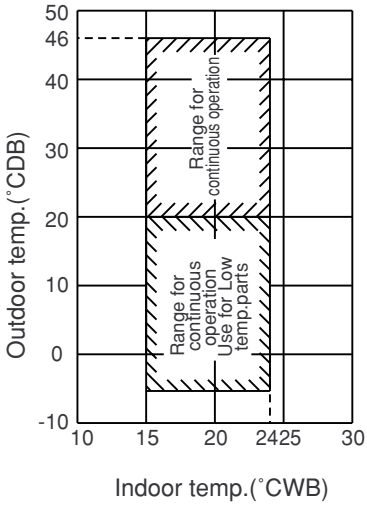


### PRH-YA1

**Cooling**

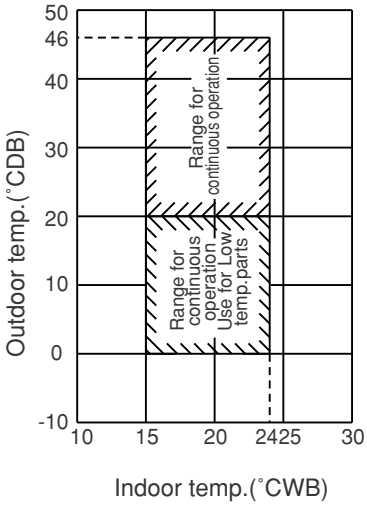


**Heating**

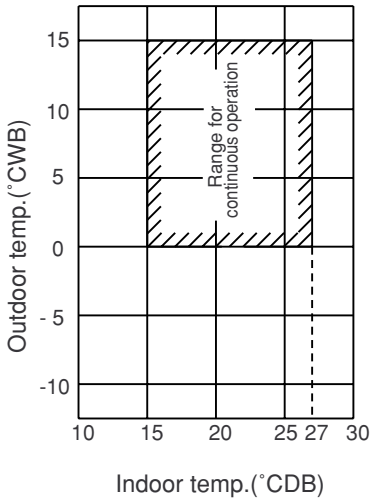


### PRH-YA1-L

**Cooling**

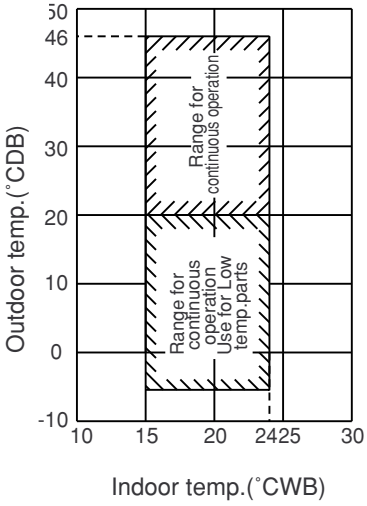


**Heating**

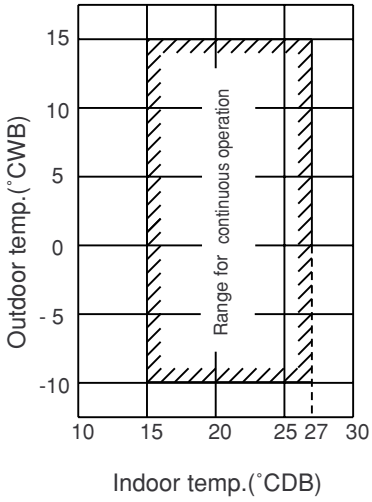

# FAN PERFORMANCE

## PR-5YC1
## PRH-5YA1
## PRH-5YA1-L

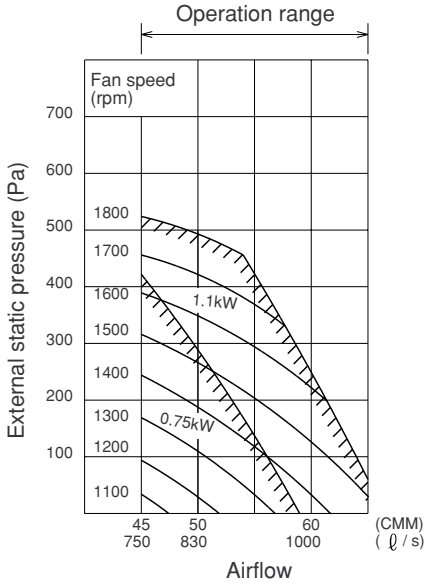


Airflow

| | CMM | | 45 | 50 | 55 | 60 |
|---|---|---|---|---|---|---|
| | L/S | | 750 | 830 | 920 | 1000 |
| 100 | FAN SPEED | rpm | 1230 | 1320 | 1450 | 1450 |
| | PULLEYSIZE | mm | 139.7 | 127 | 139.7 | 139.7 |
| | (MOTOR SIDE) | inch | 5.5 | 5 | 5.5 | 5.5 |
| | PULLEYSIZE | mm | 165.1 | 139.7 | 139.7 | 139.7 |
| | (FAN SIDE) | inch | 6.5 | 5.5 | 5.5 | 5.5 |
| | BELT SIZE | inch | B39 | B36 | B37 | B39 |
| | MOTOR | kw | 0.75 | 0.75 | 0.75 | 1.1 |
| 200 | FAN SPEED | rpm | 1330 | 1450 | 1580 | 1600 |
| | PULLEYSIZE | mm | 139.7 | 139.7 | 152.4 | 139.7 |
| | (MOTOR SIDE) | inch | 5.5 | 5.5 | 6 | 5.5 |
| | PULLEYSIZE | mm | 152.4 | 139.7 | 139.7 | 127 |
| | (FAN SIDE) | inch | 6 | 5.5 | 5.5 | 5 |
| | BELT SIZE | inch | B38 | B37 | B40 | B39 |
| | MOTOR | kw | 0.75 | 0.75 | 1.1 | 1.1 |
| 300 | FAN SPEED | rpm | 1450 | 1580 | 1610 | - |
| | PULLEYSIZE | mm | 139.7 | 152.4 | 127 | - |
| | (MOTOR SIDE) | inch | 5.5 | 6 | 5 | - |
| | PULLEYSIZE | mm | 139.7 | 139.7 | 114.3 | - |
| | (FAN SIDE) | inch | 5.5 | 5.5 | 4.5 | - |
| | BELT SIZE | inch | B37 | B40 | B37 | - |
| | MOTOR | kw | 0.75 | 1.1 | 1.1 | - |
| 400 | FAN SPEED | rpm | 1610 | - | - | - |
| | PULLEYSIZE | mm | 127 | - | - | - |
| | (MOTOR SIDE) | inch | 5.0 | - | - | - |
| | PULLEYSIZE | mm | 114.3 | - | - | - |
| | (FAN SIDE) | inch | 4.5 | - | - | - |
| | BELT SIZE | inch | B35 | - | - | - |
| | MOTOR | kw | 0.75 | - | - | - |

※ Std.

## PR-8YC1
## PRH-8YA1
## PRH-8YA1-L

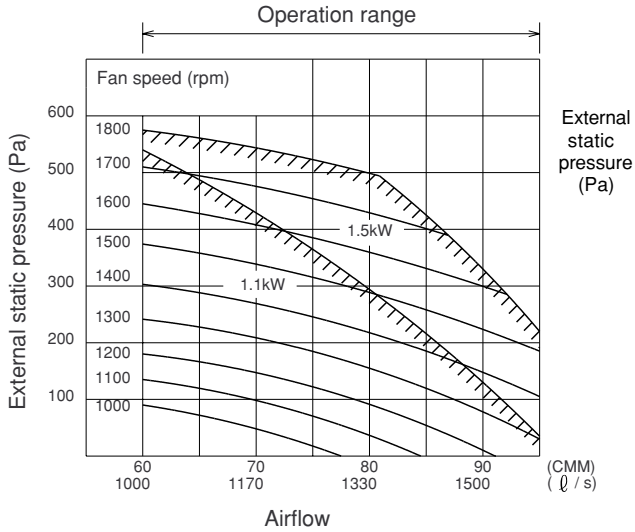


Airflow

| | CMM | | 60 | 70 | 80 | 90 | 95 |
|---|---|---|---|---|---|---|---|
| | L/S | | 1000 | 1170 | 1330 | 1500 | 1580 |
| 100 | FAN SPEED | rpm | 1000 | 1090 | 1310 | 1310 | 1450 |
| | PULLEYSIZE | mm | 114.3 | 114.3 | 114.3 | 114.3 | 127 |
| | (MOTOR SIDE) | inch | 4.5 | 4.5 | 4.5 | 4.5 | 5.0 |
| | PULLEYSIZE | mm | 165.1 | 152.4 | 127 | 127 | 127 |
| | (FAN SIDE) | inch | 6.5 | 6.0 | 5.0 | 5.0 | 5.0 |
| | BELT SIZE | inch | B39 | B39 | B37 | B37 | B35 |
| | MOTOR | kw | 1.1 | 1.1 | 1.1 | 1.5 | 1.5 |
| 200 | FAN SPEED | rpm | 1230 | 1320 | 1450 | 1450 | 1580 |
| | PULLEYSIZE | mm | 139.7 | 127 | 127 | 127 | 152.4 |
| | (MOTOR SIDE) | inch | 5.5 | 5.0 | 5.0 | 5.0 | 6.0 |
| | PULLEYSIZE | mm | 165.1 | 139.7 | 127 | 127 | 139.7 |
| | (FAN SIDE) | inch | 6.5 | 5.5 | 5.0 | 5.0 | 5.5 |
| | BELT SIZE | inch | B41 | B39 | B38 | B35 | B37 |
| | MOTOR | kw | 1.1 | 1.1 | 1.1 | 1.5 | 1.5 |
| 300 | FAN SPEED | rpm | 1450 | 1450 | 1580 | 1600 | - |
| | PULLEYSIZE | mm | 127 | 127 | 152.4 | 139.7 | - |
| | (MOTOR SIDE) | inch | 5.0 | 5.0 | 6 | 5.5 | - |
| | PULLEYSIZE | mm | 127 | 127 | 139.7 | 127 | - |
| | (FAN SIDE) | inch | 5.0 | 5.0 | 5.5 | 5.0 | - |
| | BELT SIZE | inch | B38 | B38 | B37 | B35 | - |
| | MOTOR | kw | 1.1 | 1.1 | 1.5 | 1.5 | - |
| 400 | FANSPEED | rpm | 1580 | 1600 | 1690 | - | - |
| | PULLEY SIZE | mm | 152.4 | 139.7 | 177.8 | - | - |
| | (MOTOR SIDE) | inch | 6.0 | 5.5 | 7.0 | - | - |
| | PULLEYSIZE | mm | 139.7 | 127 | 152.4 | - | - |
| | (FAN SIDE) | inch | 5.5 | 5.0 | 6.0 | - | - |
| | BELT SIZE | inch | B40 | B39 | B39 | - | - |
| | MOTOR | kw | 1.1 | 1.1 | 1.5 | - | - |
| 500 | FAN SPEED | rpm | 1740 | 1740 | - | - | - |
| | PULLEYSIZE | mm | 152.4 | 152.4 | - | - | - |
| | (MOTOR SIDE) | inch | 6.0 | 6.0 | - | - | - |
| | PULLEYSIZE | mm | 127 | 127 | - | - | - |
| | (FAN SIDE) | inch | 5.0 | 5.0 | - | - | - |
| | BELT SIZE | inch | B39 | B36 | - | - | - |
| | MOTOR | kw | 1.1 | 1.5 | - | - | - |

※ Std.

# PR-10YC1
# PRH-10YA1
# PRH-10YA1-L

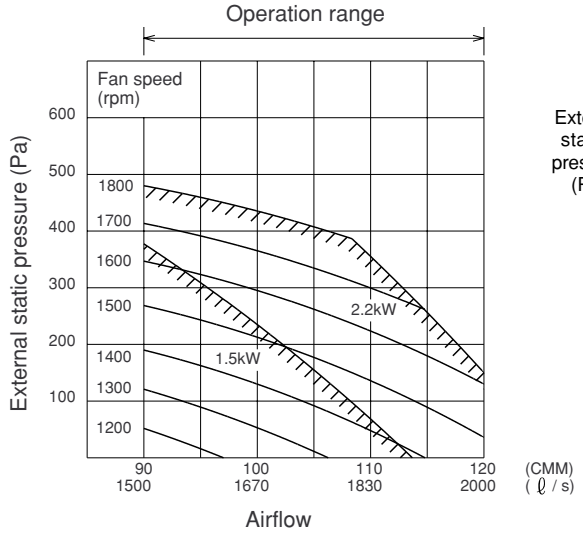


Airflow

| External static pressure (Pa) | | | CMM | 90 | 100 | 110 | 120 |
|---|---|---|---|---|---|---|---|
| | | | L/S | 1500 | 1660 | 1830 | 2000 |
| 100 | FAN SPEED | rpm | | 1320 | 1450 | 1450 | 1550 |
| | PULLEYSIZE (MOTOR SIDE) | mm | | 127 | 139.7 | 139.7 | 190.5 |
| | | inch | | 5.0 | 5.5 | 5.5 | 7.5 |
| | PULLEYSIZE (FAN SIDE) | mm | | 139.7 | 139.7 | 139.7 | 177.8 |
| | | inch | | 5.5 | 5.5 | 5.5 | 7.0 |
| | BELT SIZE | inch | | B35 | B36 | B33 | B39 |
| | MOTOR | kw | | 1.5 | 1.5 | 2.2 | 2.2 |
| 200 | FAN SPEED | rpm | | 1450 | 1450 | 1600 | - |
| | PULLEYSIZE (MOTOR SIDE) | mm | | 139.7 | 139.7 | 139.7 | - |
| | | inch | | 5.5 | 5.5 | 5.5 | - |
| | PULLEYSIZE (FAN SIDE) | mm | | 139.7 | 139.7 | 127 | - |
| | | inch | | 5.5 | 5.5 | 5.0 | - |
| | BELT SIZE | inch | | B36 | B36 | B33 | - |
| | MOTOR | kw | | 1.5 | 1.5 | 2.2 | - |
| 300 | FAN SPEED | rpm | | 1580 | 1600 | 1740 | - |
| | PULLEYSIZE (MOTOR SIDE) | mm | | 152.4 | 139.7 | 152.4 | - |
| | | inch | | 6 | 5.5 | 6.0 | - |
| | PULLEYSIZE (FAN SIDE) | mm | | 139.7 | 127 | 127 | - |
| | | inch | | 5.5 | 5.0 | 5.0 | - |
| | BELT SIZE | inch | | B37 | B33 | B34 | - |
| | MOTOR | kw | | 1.5 | 2.2 | 2.2 | - |
| 400 | FAN SPEED | rpm | | 1710 | 1740 | - | - |
| | PULLEYSIZE (MOTOR SIDE) | mm | | 165.1 | 152.4 | - | - |
| | | inch | | 6.5 | 6.0 | - | - |
| | PULLEYSIZE (FAN SIDE) | mm | | 139.7 | 127 | - | - |
| | | inch | | 5.5 | 5.0 | - | - |
| | BELT SIZE | inch | | B35 | B34 | - | - |
| | MOTOR | kw | | 2.2 | 2.2 | - | - |

※ Std.

# PR-15YC1
# PRH-15YA1
# PRH-15YA1-L

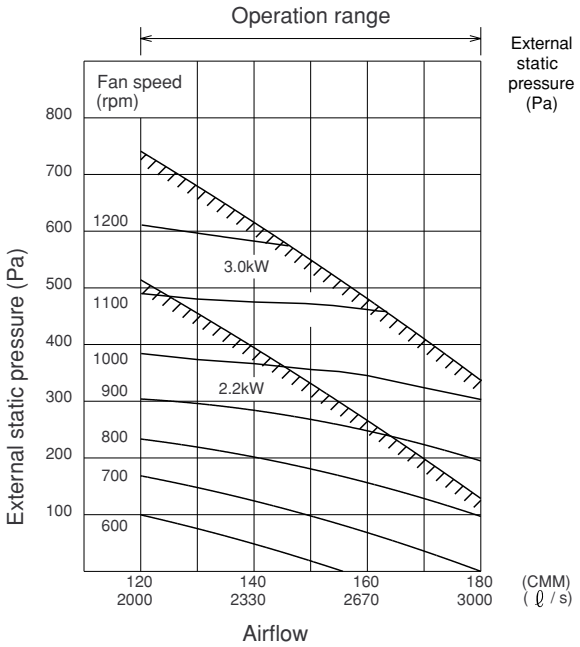


Airflow

| External static pressure (Pa) | | | CMM | 120 | 130 | 140 | 150 | 160 | 170 | 180 |
|---|---|---|---|---|---|---|---|---|---|---|
| | | | L/S | 2000 | 2170 | 2330 | 2500 | 2670 | 2830 | 3000 |
| 100 | FAN SPEED | rpm | | 640 | 640 | 690 | 730 | 730 | 760 | 810 |
| | PULLEY SIZE (MOTOR SIDE) | mm | | 101.6 | 101.6 | 114.3 | 127 | 127 | 127 | 127 |
| | | inch | | 4.0 | 4.0 | 4.5 | 5.0 | 5.0 | 5.0 | 5.0 |
| | PULLEYSIZE (FAN SIDE) | mm | | 228.6 | 228.6 | 241.3 | 254 | 254 | 241.3 | 228.6 |
| | | inch | | 9.0 | 9.0 | 9.5 | 10.0 | 10.0 | 9.5 | 9.0 |
| | BELT SIZE | inch | | B37×2 | B37×2 | B39×2 | B41×2 | B41×2 | B40×2 | B39×2 |
| | MOTOR | kw | | 2.2 | 2.2 | 2.2 | 2.2 | 2.2 | 2.2 | 2.2 |
| 200 | FAN SPEED | rpm | | 760 | 810 | 810 | 850 | 890 | 890 | 910 |
| | PULLEYSIZE (MOTOR SIDE) | mm | | 127 | 127 | 127 | 127 | 139.7 | 139.7 | 127 |
| | | inch | | 5.0 | 5.0 | 5.0 | 5.0 | 5.5 | 5.5 | 5.0 |
| | PULLEYSIZE (FAN SIDE) | mm | | 241.3 | 228.6 | 228.6 | 215.9 | 228.6 | 228.6 | 203.2 |
| | | inch | | 9.5 | 9.0 | 9.0 | 8.5 | 9.0 | 9.0 | 8.0 |
| | BELT SIZE | inch | | B40×2 | B39×2 | B39×2 | B38×2 | B39×2 | B39×2 | B37×2 |
| | MOTOR | kw | | 2.2 | 2.2 | 2.2 | 2.2 | 2.2 | 2.2 | 3.0 |
| 300 | FAN SPEED | rpm | | 910 | 910 | 910 | 970 | 1000 | 970 | 1040 |
| | PULLEYSIZE (MOTOR SIDE) | mm | | 127 | 127 | 127 | 127 | 139.7 | 127 | 127 |
| | | inch | | 5.0 | 5.0 | 5.0 | 5.0 | 5.5 | 5.0 | 5.0 |
| | PULLEYSIZE (FAN SIDE) | mm | | 203.2 | 203.2 | 203.2 | 190.5 | 203.2 | 190.5 | 177.8 |
| | | inch | | 8.0 | 8.0 | 8.0 | 7.5 | 8.0 | 7.5 | 7.0 |
| | BELT SIZE | inch | | B37×2 | B37×2 | B37×2 | B36×2 | B37×2 | B36×2 | B35×2 |
| | MOTOR | kw | | 2.2 | 2.2 | 2.2 | 2.2 | 3.0 | 3.0 | 3.0 |
| 400 | FAN SPEED | rpm | | 1040 | 1040 | 1040 | 1040 | 1040 | 1040 | - |
| | PULLEYSIZE (MOTOR SIDE) | mm | | 127 | 127 | 127 | 127 | 127 | 127 | - |
| | | inch | | 5.0 | 5.0 | 5.0 | 5.0 | 5.0 | 5.0 | - |
| | PULLEYSIZE (FAN SIDE) | mm | | 177.8 | 177.8 | 177.8 | 177.8 | 177.8 | 177.8 | - |
| | | inch | | 7.0 | 7.0 | 7.0 | 7.0 | 7.0 | 7.0 | - |
| | BELT SIZE | inch | | B35×2 | B35×2 | B35×2 | B35×2 | B35×2 | B35×2 | - |
| | MOTOR | kw | | 2.2 | 2.2 | 3.0 | 3.0 | 3.0 | 3.0 | - |
| 500 | FAN SPEED | rpm | | 1120 | 1140 | 1120 | 1120 | - | - | - |
| | PULLEYSIZE (MOTOR SIDE) | mm | | 127 | 139.7 | 127 | 127 | - | - | - |
| | | inch | | 5.0 | 5.5 | 5.0 | 5.0 | - | - | - |
| | PULLEYSIZE (FAN SIDE) | mm | | 165.1 | 177.8 | 165.1 | 165.1 | - | - | - |
| | | inch | | 6.5 | 7.0 | 6.5 | 6.5 | - | - | - |
| | BELT SIZE | inch | | B34×2 | B36×2 | B34×2 | B34×2 | - | - | - |
| | MOTOR | kw | | 2.2 | 3.0 | 3.0 | 3.0 | - | - | - |
| 600 | FAN SPEED | rpm | | 1210 | 1230 | 1230 | - | - | - | - |
| | PULLEYSIZE (MOTOR SIDE) | mm | | 127 | 139.7 | 139.7 | - | - | - | - |
| | | inch | | 5.0 | 5.5 | 5.5 | - | - | - | - |
| | PULLEYSIZE (FAN SIDE) | mm | | 152.4 | 165.1 | 165.1 | - | - | - | - |
| | | inch | | 6.0 | 6.5 | 6.5 | - | - | - | - |
| | BELT SIZE | inch | | B33×2 | B35×2 | B35×2 | - | - | - | - |
| | MOTOR | kw | | 3 | 3 | 3 | - | - | - | - |

※ Std.

# PR-20YC1
# PRH-20YA1
# PRH-20YA1-L

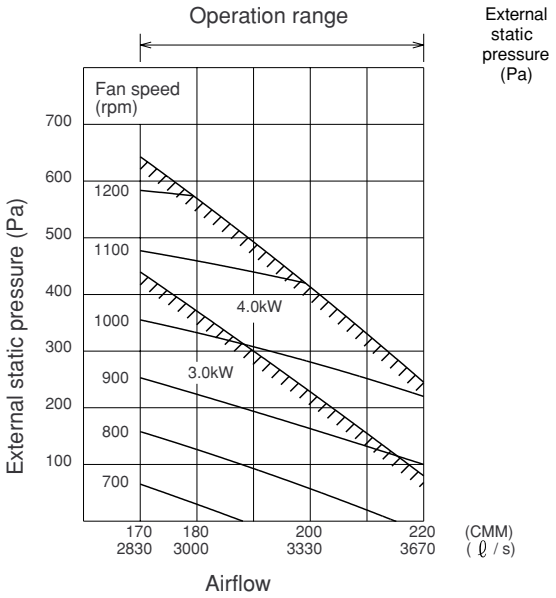


Airflow

| External static pressure (Pa) | CMM | | 170 | 180 | 190 | 200 | 210 | 220 |
|---|---|---|---|---|---|---|---|---|
| | L/S | | 2830 | 3000 | 3170 | 3330 | 3500 | 3670 |
| 100 | FAN SPEED | rpm | 730 | 810 | 810 | 840 | 910 | 940 |
| | PULLEY SIZE (MOTOR SIDE) | mm | 127 | 127 | 127 | 139.7 | 127 | 139.7 |
| | | inch | 5.0 | 5.0 | 5.0 | 5.5 | 5.0 | 5.5 |
| | PULLEY SIZE (FAN SIDE) | mm | 254 | 228.6 | 228.6 | 241.3 | 203.2 | 215.9 |
| | | inch | 10.0 | 9.0 | 9.0 | 9.5 | 8.0 | 8.5 |
| | BELT SIZE | inch | B43×2 | B41×2 | B41×2 | B42×2 | B39×2 | B41×2 |
| | MOTOR | kw | 3.0 | 3.0 | 3.0 | 3.0 | 3.0 | 4.0 |
| 200 | FAN SPEED | rpm | 850 | 910 | 910 | 910 | 1000 | 970 |
| | PULLEY SIZE (MOTOR SIDE) | mm | 127 | 127 | 127 | 127 | 139.7 | 127 |
| | | inch | 5.0 | 5.0 | 5.0 | 5.0 | 5.5 | 5.0 |
| | PULLEY SIZE (FAN SIDE) | mm | 215.9 | 203.2 | 203.2 | 203.2 | 203.2 | 190.5 |
| | | inch | 8.5 | 8.0 | 8.0 | 8.0 | 8.0 | 7.5 |
| | BELT SIZE | inch | B40×2 | B39×2 | B39×2 | B39×2 | B40×2 | B38×2 |
| | MOTOR | kw | 3.0 | 3.0 | 3.0 | 3.0 | 4.0 | 4.0 |
| 300 | FAN SPEED | rpm | 940 | 1000 | 1040 | 1040 | 1040 | - |
| | PULLEY SIZE (MOTOR SIDE) | mm | 139.7 | 139.7 | 127 | 127 | 127 | - |
| | | inch | 5.5 | 5.5 | 5.0 | 5.0 | 5.0 | - |
| | PULLEYSIZE (FAN SIDE) | mm | 215.9 | 203.2 | 177.8 | 177.8 | 177.8 | - |
| | | inch | 8.5 | 8.0 | 7.0 | 7.0 | 7.0 | - |
| | BELT SIZE | inch | B41×2 | B40×2 | B37×2 | B37×2 | B37×2 | - |
| | MOTOR | kw | 3.0 | 3.0 | 4.0 | 4.0 | 4.0 | - |
| 400 | FAN SPEED | rpm | 1040 | 1040 | 1060 | 1120 | - | - |
| | PULLEY SIZE (MOTOR SIDE) | mm | 127 | 127 | 139.7 | 127 | - | - |
| | | inch | 5.0 | 5.0 | 5.5 | 5.0 | - | - |
| | PULLEY SIZE (FAN SIDE) | mm | 177.8 | 177.8 | 190.5 | 165.1 | - | - |
| | | inch | 7.0 | 7 | 7.5 | 6.5 | - | - |
| | BELT SIZE | inch | B37×2 | B37×2 | B39×2 | B36×2 | - | - |
| | MOTOR | kw | 3.0 | 4.0 | 4.0 | 4.0 | - | - |
| 500 | FAN SPEED | rpm | 1140 | 1120 | - | - | - | - |
| | PULLEY SIZE (MOTOR SIDE) | mm | 139.7 | 127 | - | - | - | - |
| | | inch | 5.5 | 5.0 | - | - | - | - |
| | PULLEY SIZE (FAN SIDE) | mm | 177.8 | 165.1 | - | - | - | - |
| | | inch | 7.0 | 6.5 | - | - | - | - |
| | BELT SIZE | inch | B38×2 | B36×2 | - | - | - | - |
| | MOTOR | kw | 4 | 4 | - | - | - | - |
| 600 | FAN SPEED | rpm | 1230 | - | - | - | - | - |
| | PULLEY SIZE (MOTOR SIDE) | mm | 139.7 | - | - | - | - | - |
| | | inch | 5.5 | - | - | - | - | - |
| | PULLEY SIZE (FAN SIDE) | mm | 165.1 | - | - | - | - | - |
| | | inch | 6.5 | - | - | - | - | - |
| | BELT SIZE | inch | B37×2 | - | - | - | - | - |
| | MOTOR | kw | 4.0 | - | - | - | - | - |

※ Std.

## Pulley outside dimensions are shown below: (Unit : mm)

(1) Shape of belt groove

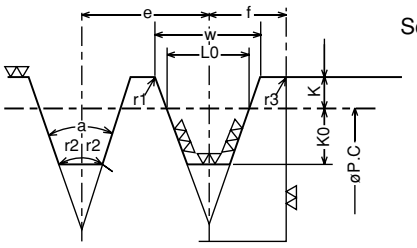


Sectional plan of V-belt

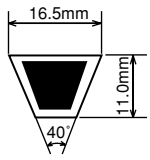


B type

| Shape of V-belt | Norminal Dia. øP.C | a (°) | W | LO | K | KO | e | f | r1 | r2 | r3 | V-belt thickness (Reference) |
|---|---|---|---|---|---|---|---|---|---|---|---|---|
| B | Over 125 Under 160 | 34 | 15.86 | 12.2 | 5.5 | 9.5 | 19.0 | 12.5 | 0.2~0.5 | 0.5~1.0 | 1~2 | 11 |
| | Over 160 Under 200 | 36 | 16.07 | | | | | | | | | |
| | Over 200 | 38 | 16.29 | | | | | | | | | |

(2) Shape of motor pulley boss (Unit : mm)

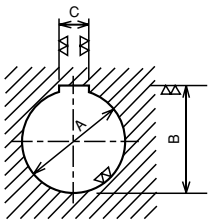


| MOTOR CAPACITY (kW) | A | B | C |
|---|---|---|---|
| 0.75 | $\phi 19^{+0.028}_{+0.007}$ | $21.8^{+0.1}_{0}$ | $6^{+0.015}_{-0.015}$ |
| 1.1 | $\phi 24^{+0.028}_{+0.007}$ | $20.0^{0}_{-0.2}$ | $8^{+0.073}_{-0.040}$ |
| 1.5 | $\phi 24^{+0.028}_{+0.007}$ | $27.0^{+0.128}_{+0.007}$ | $8^{+0.018}_{-0.018}$ |
| 2.2, 3.0 | $\phi 28^{+0.028}_{+0.007}$ | $23.9^{0}_{-0.2}$ | $8^{+0.073}_{+0.040}$ |
| 4.0 | $\phi 28^{+0.028}_{+0.007}$ | $31.0^{+0.128}_{+0.007}$ | $8^{+0.018}_{-0.018}$ |
| 5.5 | $\phi 38^{+0.028}_{+0.007}$ | $41.0^{+0.009}$ | $10^{+0.018}_{-0.018}$ |

# NC CURVES

**PR-5YC$_1$**
**PRH-5YA$_1$**
**PRH-5YA$_1$-L**

50Hz

| CONDITION | A scale | 63 Hz | 125 Hz | 250 Hz | 500 Hz | 1000 Hz | 2000 Hz | 4000 Hz | 8000 Hz |
|---|---|---|---|---|---|---|---|---|---|
| COOLING & HEATING | 62db | 67 | 63 | 62 | 61 | 57 | 50 | 45 | 43 |

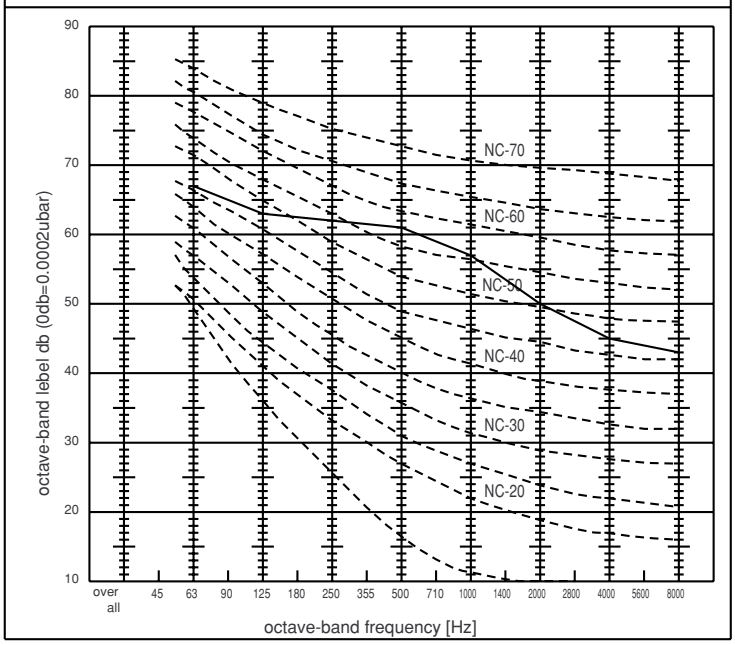


Note: The measuring point is 1m from the comp. service panel.

**PR-8YC$_1$**
**PRH-8YA$_1$**
**PRH-8YA$_1$-L**

50Hz

| CONDITION | A scale | 63 Hz | 125 Hz | 250 Hz | 500 Hz | 1000 Hz | 2000 Hz | 4000 Hz | 8000 Hz |
|---|---|---|---|---|---|---|---|---|---|
| COOLING & HEATING | 64db | 70 | 67 | 62 | 60 | 58 | 56 | 52 | 50 |

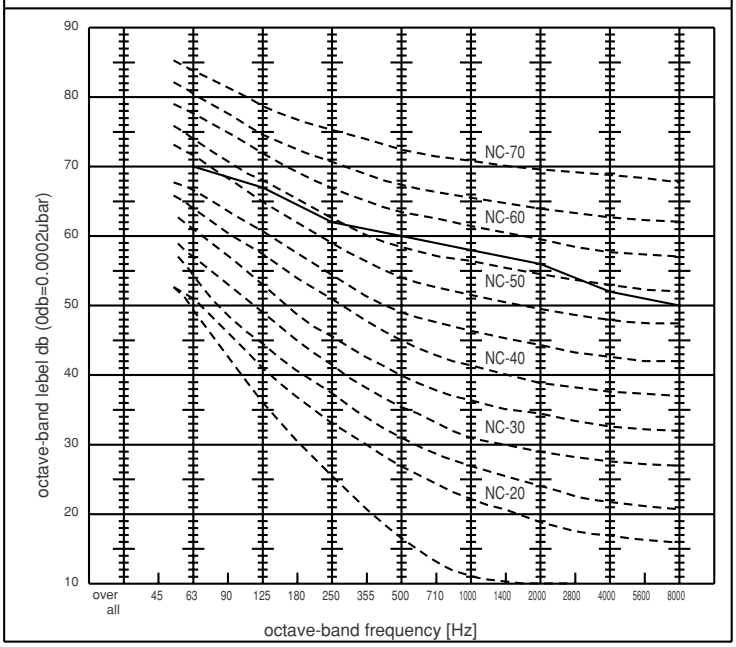


Note: The measuring point is 1m from the comp. service panel.

**PR-10YC1**
**PRH-10YA1**
**PRH-10YA1-L**

50Hz

| CONDITION | A scale | 63 Hz | 125 Hz | 250 Hz | 500 Hz | 1000 Hz | 2000 Hz | 4000 Hz | 8000 Hz |
|---|---|---|---|---|---|---|---|---|---|
| COOLING & HEATING | 64db | 71 | 69 | 63 | 61 | 59 | 57 | 49 | 44 |

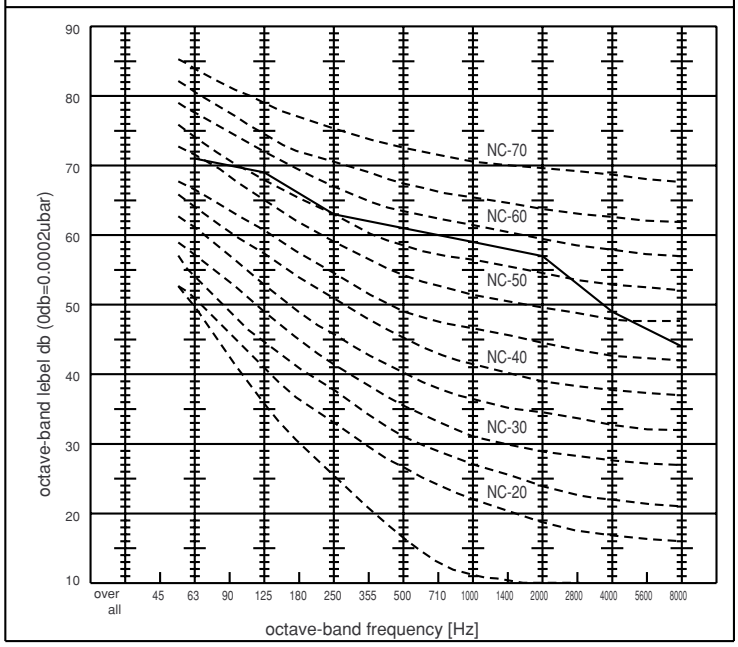


Note: The measuring point is 1m from the comp. service panel.

**PR-15YC1**
**PRH-15YA1**
**PRH-15YA1-L**

50Hz

| CONDITION | A scale | 63 Hz | 125 Hz | 250 Hz | 500 Hz | 1000 Hz | 2000 Hz | 4000 Hz | 8000 Hz |
|---|---|---|---|---|---|---|---|---|---|
| COOLING & HEATING | 68db | 76 | 76 | 68 | 65 | 62 | 59 | 51 | 48 |

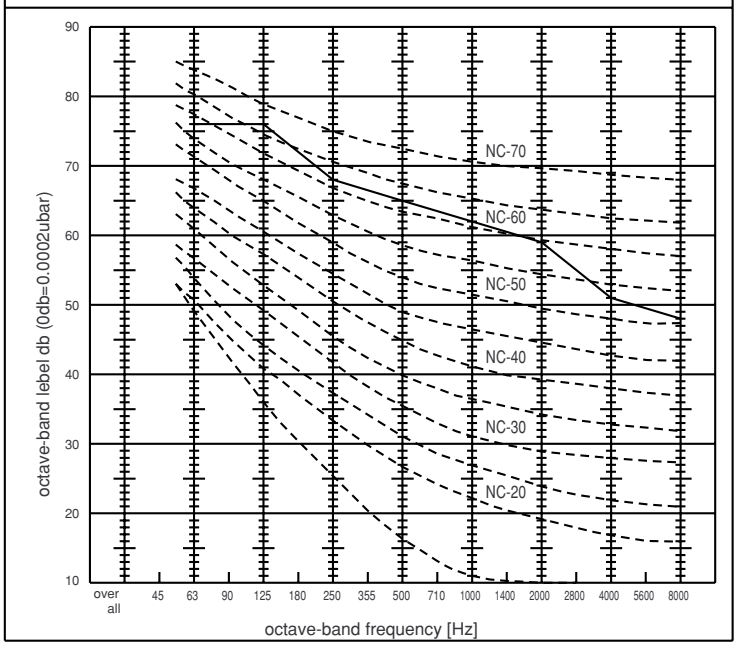


Note: The measuring point is 1m from the comp. service panel.

**PR-20YC1**
**PRH-20YA1**
**PRH-20YA1-L**

50Hz

| CONDITION | A scale | 63 Hz | 125 Hz | 250 Hz | 500 Hz | 1000 Hz | 2000 Hz | 4000 Hz | 8000 Hz |
|---|---|---|---|---|---|---|---|---|---|
| COOLING & HEATING | 68db | 73.5 | 77 | 70 | 65 | 60 | 58 | 51 | 48 |

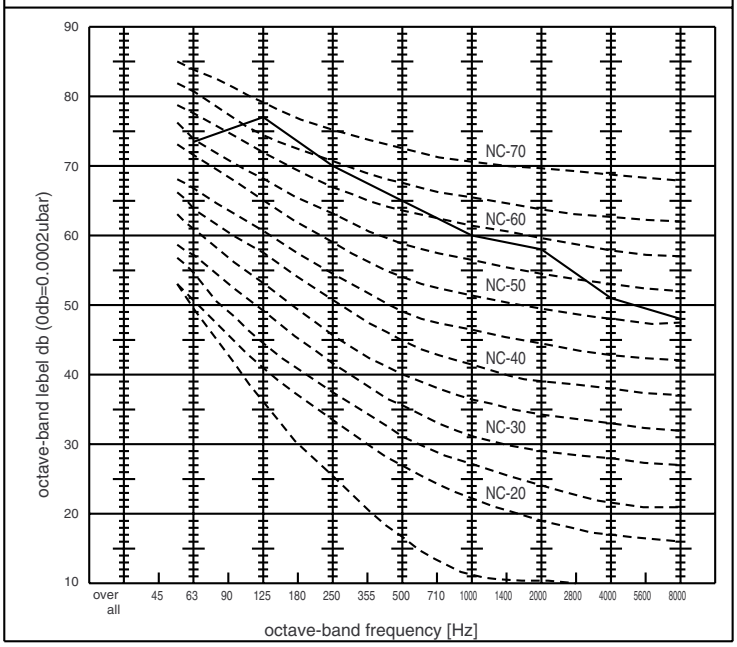


Note: The measuring point is 1m from the comp. service panel.

# OUTLINE DIMENSIONS

**PR-5YC1**
**PRH-5YA1**
**PRH-5YA1-L**

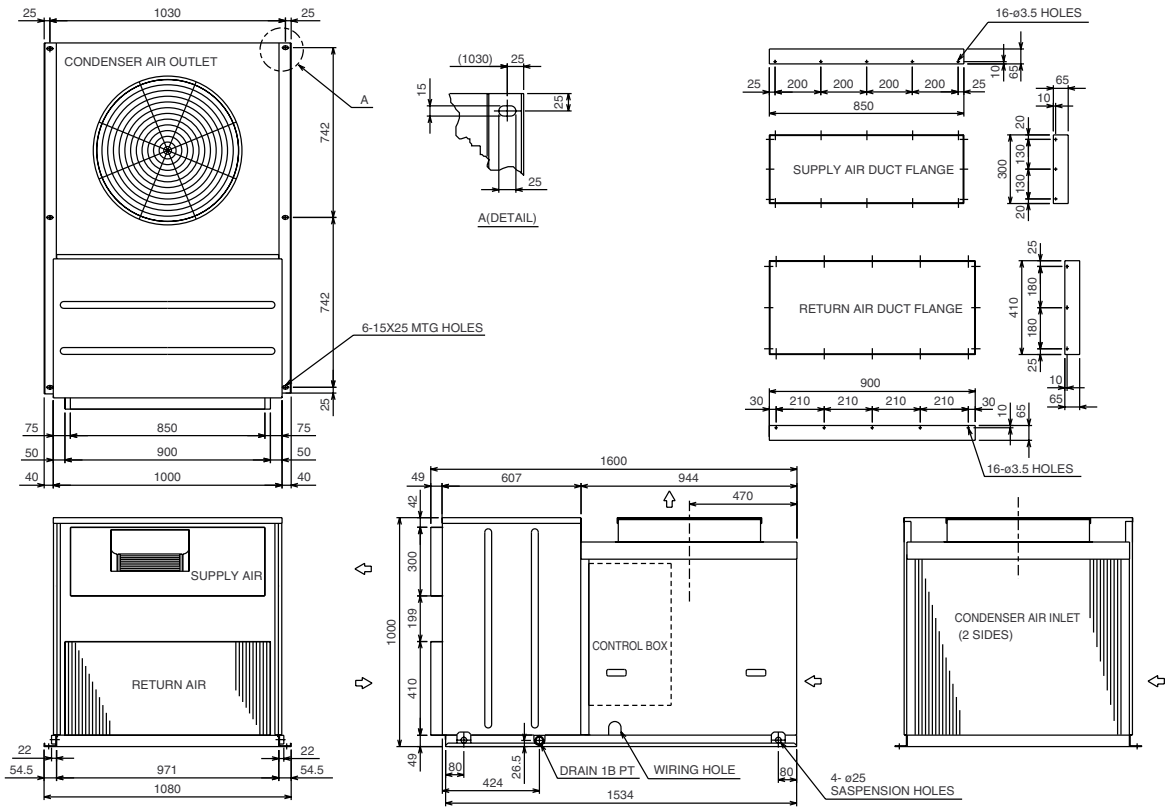

# PR-8,10YC1
# PRH-8, 10YA1
# PRH-8, 10YA1-L

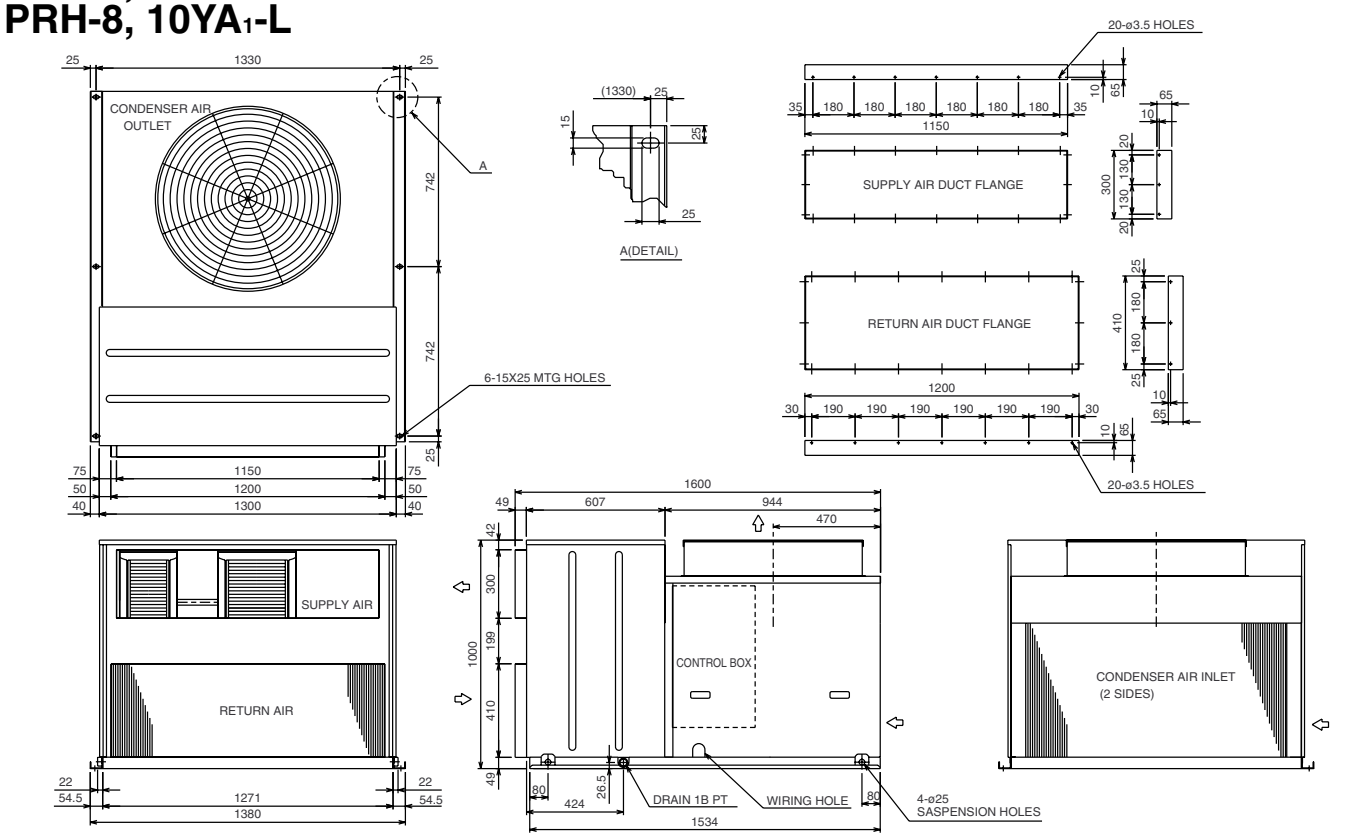


# PR-15,20YC1
# PRH-15, 20YA1
# PRH-15, 20YA1-L

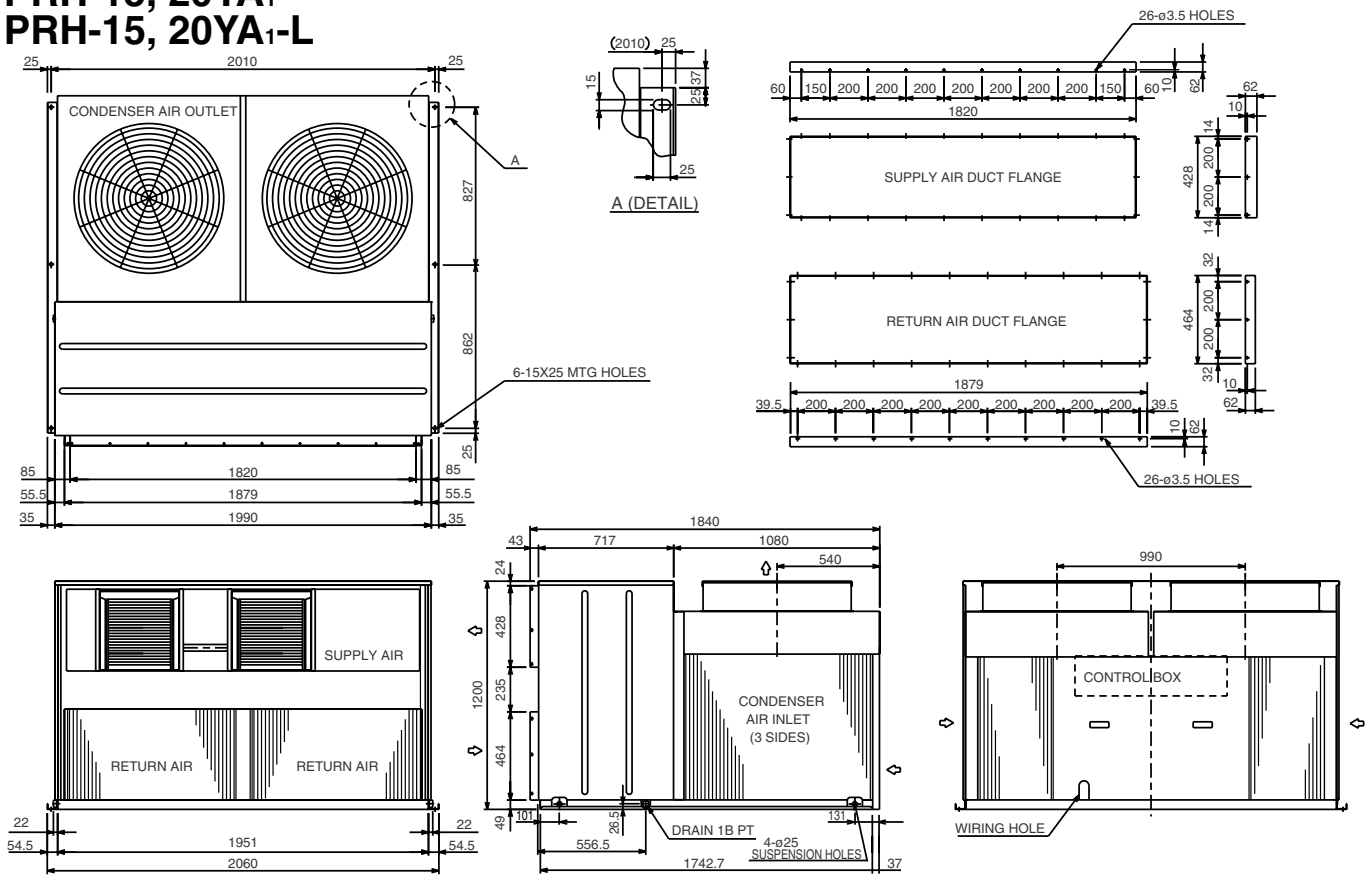

# WIRING DIAGRAMS

## PR-5, 8, 10YC1 (STANDARD)

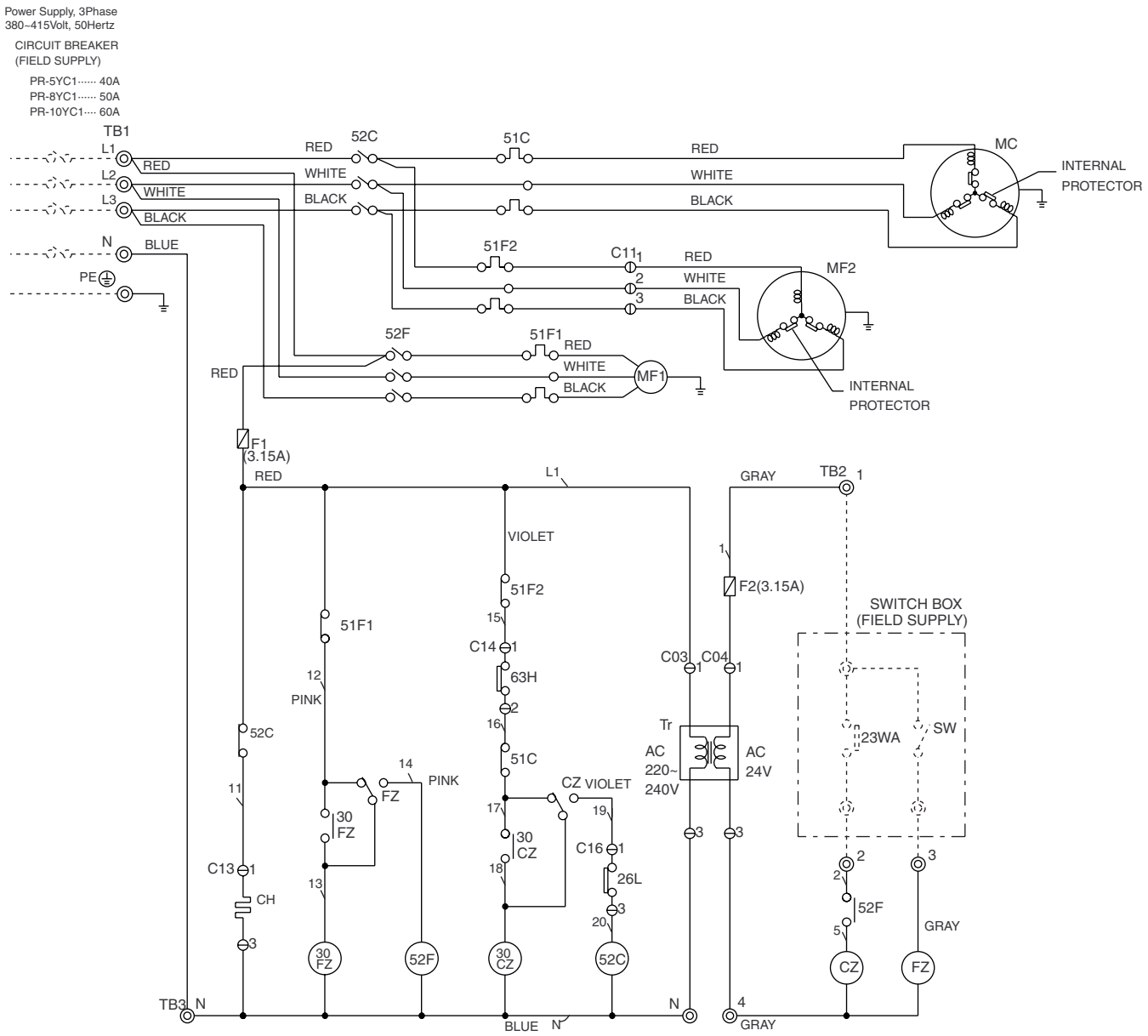


Caution
To protect each Fan motor and Compressor from abnormal current, Over current relays <51C>, <51F1,2> are installed. Therefore, do not change factory set value of Over current relays.

Note:
1.The dotted lines show field wiring.
2.The figure in the parentheses show field supply parts.
3.Color of earth wire is yellow and green twisting.
4.Specification subject to change without notice.

Controller connection.

| Symbol | No. | Function | PAC-204RC (Option) terminal No. |
|---|---|---|---|
| TB2 | 1 | Power (Active) | 24VAC(L) |
| | 2 | Cooling operation | COMP1 |
| | 3 | Fan operation | FAN HI |
| | 4 | Power (Neutral) | 24VAC(N) |

| Symbol | Name |
|---|---|
| MC | Compressor motor |
| MF1 | Fan motor (indoor) |
| MF2 | Fan motor (outdoor) |
| 52C | Contactor (compressor) |
| 52F | Contactor (fan I/D) |
| TB1~3 | Terminal block |
| F1, F2 | Fuse (3.15A) |
| Tr | Transformer |
| 51C | Over current relay (compressor) |
| 51F1, 2 | Over current relay (fanI/D,O/D) |
| 63H | High-pressure switch |
| FZ | Auxiliary relay (fan) |
| CZ | Auxiliary relay (compressor) |
| 30CZ, 30FZ | Auxiliary relay (check) |
| <SW> | Switch (on) |
| <23WA> | Thermostat (room temp.) |
| CH | Crankcase heater |
| C03, 04,11 13,14,16 | Connector |
| 26L | Thermostat (freeze protection) |

# PR-15, 20YC1 (STANDARD)

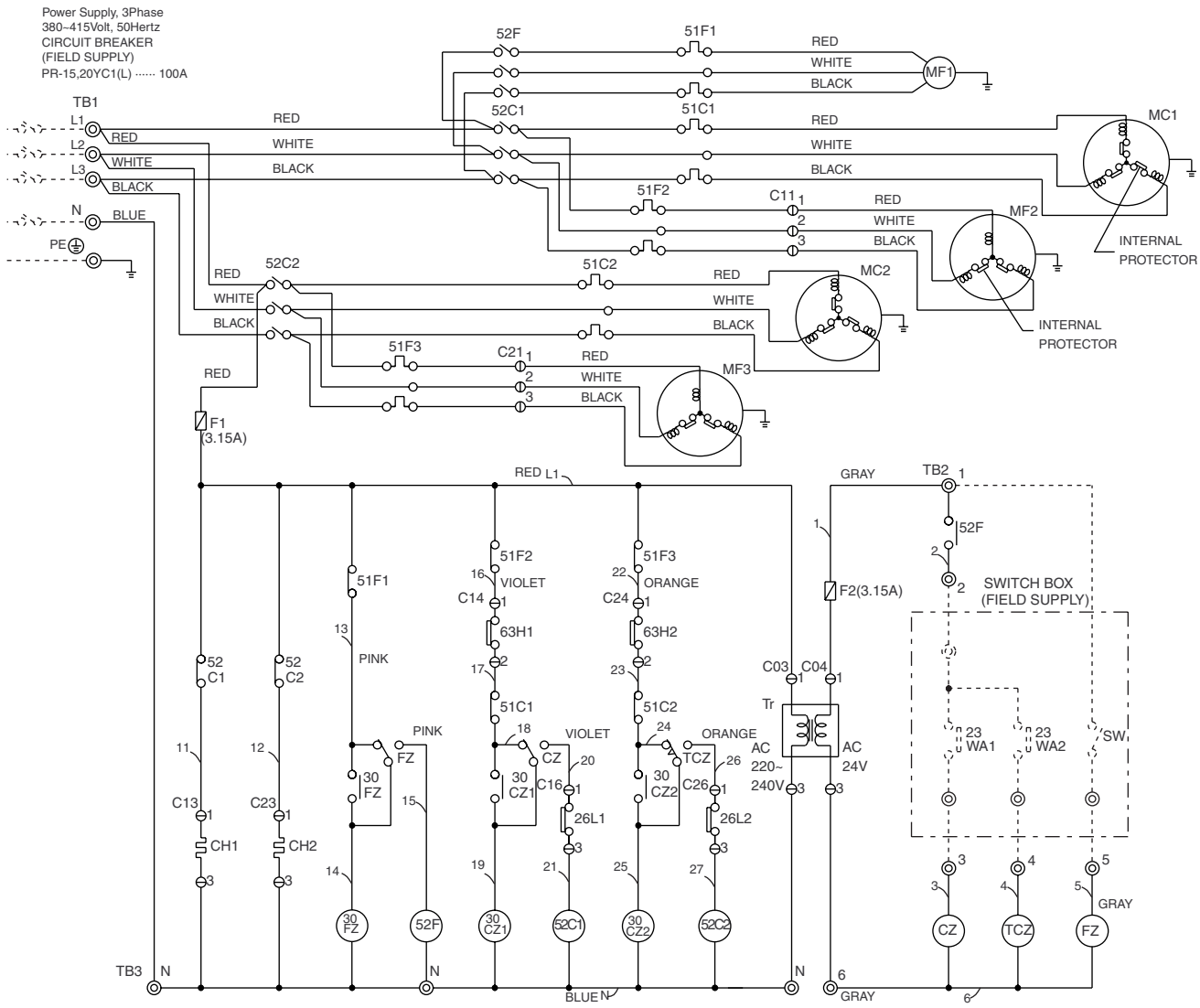


Caution

To protect each Fan motor and Compressor from abnormal current, Over current relays <51C1, 2>, <51F1~3> are installed. Therefore, do not change factory set value of Over current relays.

Note:

1.The dotted lines show field wiring.
2.The figure in the parentheses show field supply parts.
3.Color of earth wire is yellow and green twisting.
4.Specification subject to change without notice.

Controller connection.

| Symbol | No. | Function | PAC-204RC (Option) terminal no. |
|---|---|---|---|
| TB2 | 1 | Power (Active) | 24VAC(L) |
| | 3 | Cooling operation | COMP1 |
| | 4 | Cooling operation | COMP2 |
| | 5 | Fan operation | FAN HI |
| | 6 | Power (Neutral) | 24VAC(N) |

| Symbol | Name |
|---|---|
| MC1, 2 | Compressor motor |
| MF1 | Fan motor (indoor) |
| MF2, 3 | Fan motor (outdoor) |
| 52C1, 2 | Contactor (compressor) |
| 52F | Contactor (fan I/D) |
| TB1~3 | Terminal block |
| F1, F2 | Fuse (3.15A) |
| Tr | Transformer |
| 51C1, 2 | Over current relay (compressor) |
| 51F1~3 | Over current relay (fanI/D,O/D) |
| 63H1, 2 | High-pressure switch |
| FZ | Auxiliary relay (fan) |
| CZ | Auxiliary relay (compressor) |
| 30CZ1, 2 | Auxiliary relay (check) |
| 30FZ | Auxiliary relay (check) |
| TCZ | Auxiliary relay (check) |
| <SW> | Switch (on) |
| <23WA1,2> | Thermostat (room temp.) |
| CH1, 2 | Crankcase heater |
| C03, 04,11 13,14,16,21, 23, 24, 26 | Connector |
| 26L1, 2 | Thermostat (freeze protection) |

# PR-5, 8, 10YC1
# (SPECIAL ORDER : LOW TEMPERATURE)

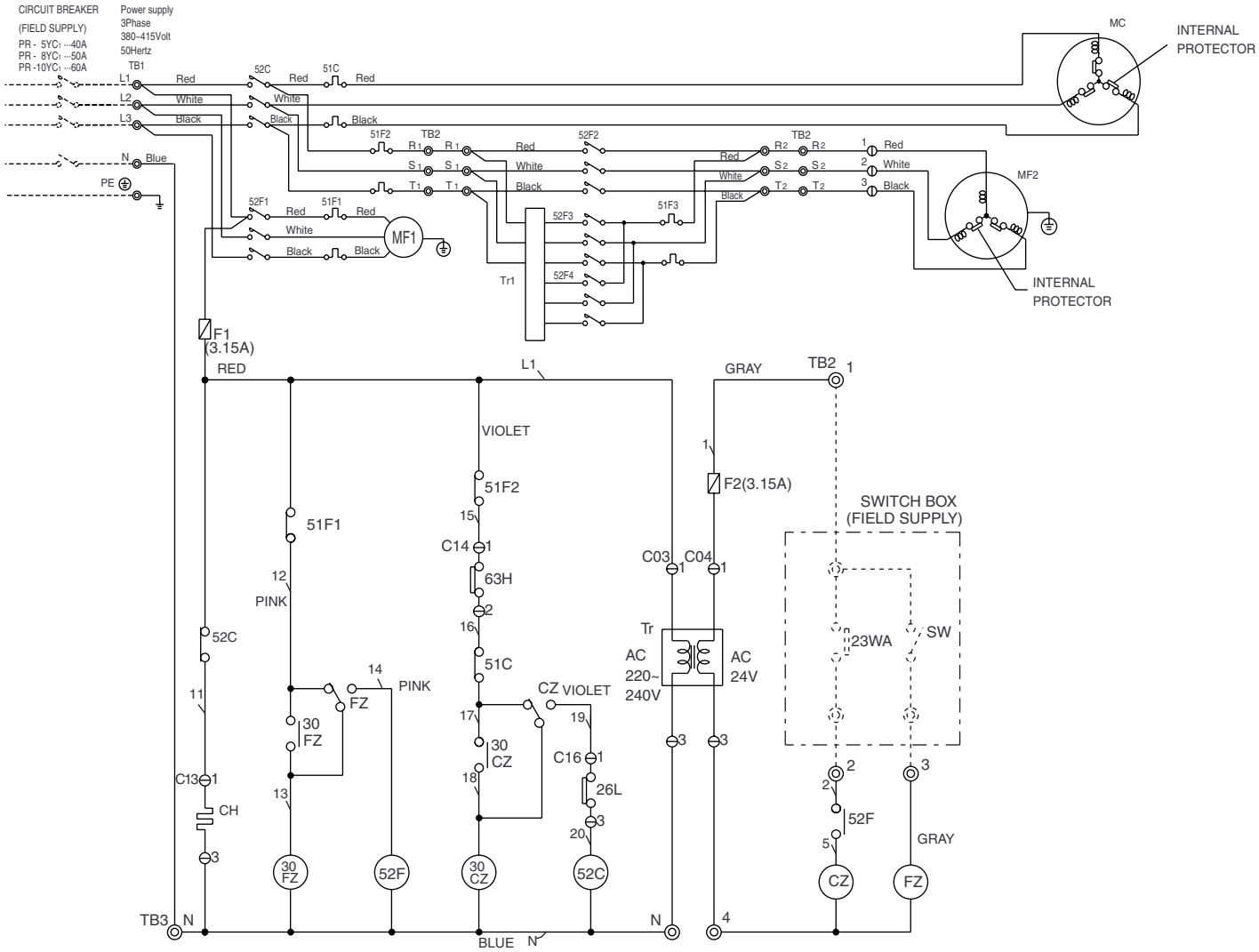


Caution

To protect each Fan motor and Compressor from abnormal current, Over current relays <51C>, <51F1,2,3> are installed. Therefore, do not change factory set value of Over current relays.

Note:

1.The dotted lines show field wiring.
2.The figure in the parentheses show field supply parts.
3.Color of earth wire is yellow and green twisting.
4.Specification subject to change without notice.

Controller connection.

| Symbol | No. | Function | PAC-204RC (Option) terminal No. |
|---|---|---|---|
| TB2 | 1 | Power (Active) | 24VAC(L) |
| | 2 | Cooling operation | COMP1 |
| | 3 | Fan operation | FAN HI |
| | 4 | Power (Neutral) | 24VAC(N) |

| Symbol | Name |
|---|---|
| MC | Compressor motor |
| MF1 | Fan motor (indoor) |
| MF2 | Fan motor (outdoor) |
| 52C | Contactor (compressor) |
| 52F1,2,3,4 | Contactor (fan I/D, O/D) |
| TB1~3 | Terminal block |
| F1, F2 | Fuse (3.15A) |
| Tr,Tr1 | Transformer |
| 51C | Over current relay (compressor) |
| 51F1, 2, 3 | Over current relay (fan I/D, O/D) |
| 63H | High-pressure switch |
| FZ | Auxiliary relay (fan) |
| CZ | Auxiliary relay (compressor) |
| 30CZ, 30FZ | Auxiliary relay (check) |
| <SW> | Switch (on) |
| <23WA> | Thermostat (room temp.) |
| CH | Crankcase heater |
| C03, 04,11 13,14,16 | Connector |
| 26L | Thermostat (freeze protection) |

# PR-15, 20YC1
# (SPECIAL ORDER : LOW TEMPERATURE)

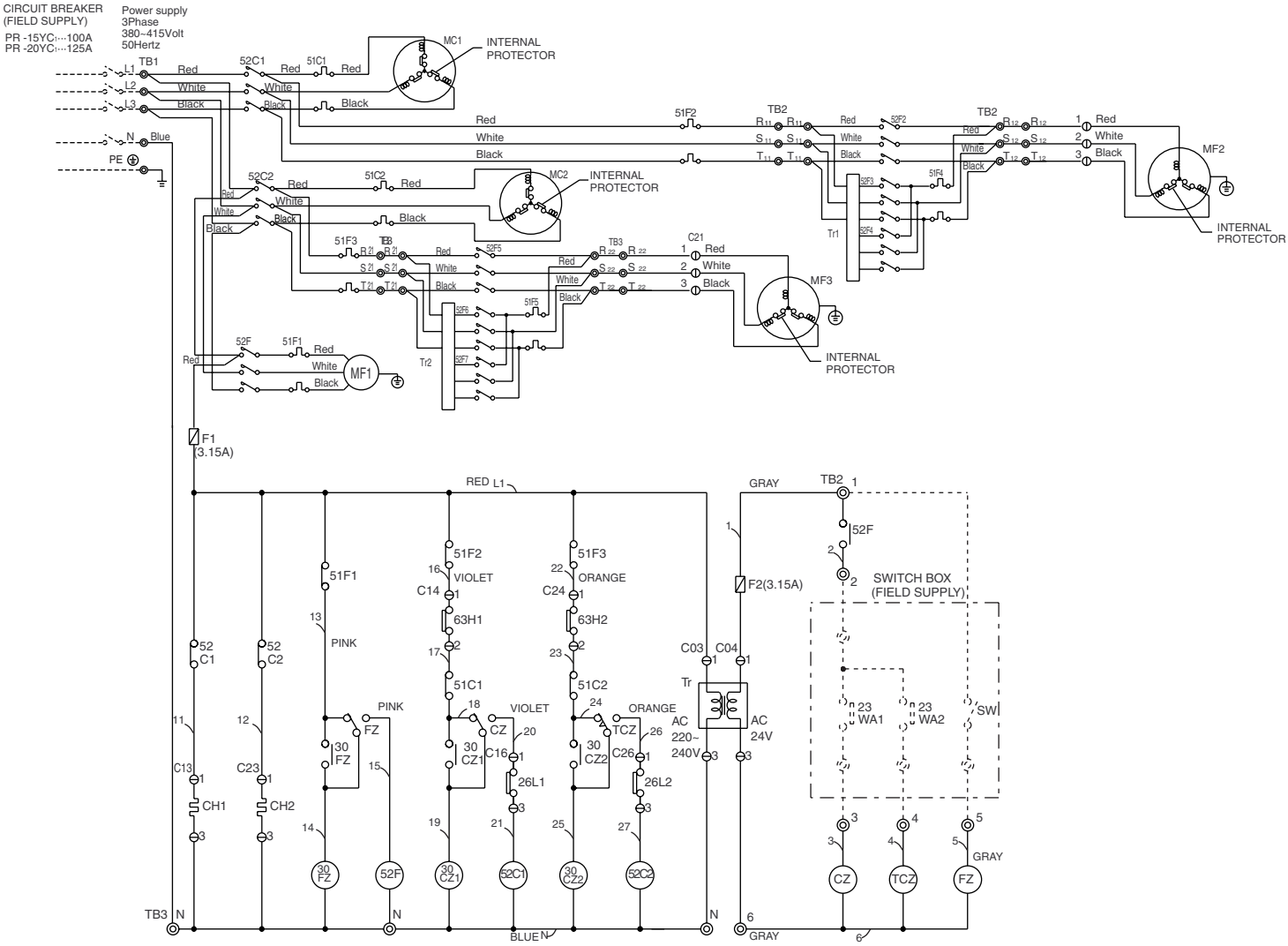


Caution
To protect each Fan motor and Compressor from abnormal current, Over current relays <51C1, 2>, <51F1~3> are installed. Therefore, do not change factory set value of Over current relays.

Note:
1.The dotted lines show field wiring.
2.The figure in the parentheses show field supply parts.
3.Color of earth wire is yellow and green twisting.
4.Specification subject to change without notice.

Controller connection.

| Symbol | No. | Function | PAC-204RC (Option) terminal no. |
|---|---|---|---|
| TB2 | 1 | Power (Active) | 24VAC(L) |
| | 3 | Cooling operation | COMP1 |
| | 4 | Cooling operation | COMP2 |
| | 5 | Fan operation | FAN HI |
| | 6 | Power (Neutral) | 24VAC(N) |

| Symbol | Name |
|---|---|
| MC1, 2 | Compressor motor |
| MF1 | Fan motor (indoor) |
| MF2, 3 | Fan motor (outdoor) |
| 52C1, 2 | Contactor (compressor) |
| 52F | Contactor (fan I/D) |
| 52F2~7 | Contactor (fan O/D) |
| TB1~3 | Terminal block |
| F1, F2 | Fuse (3.15A) |
| Tr | Transformer |
| 51C1, 2 | Over current relay (compressor) |
| 51F1~3 | Over current relay (fanI/D,O/D) |
| 63H1, 2 | High-pressure switch |
| FZ | Auxiliary relay (fan) |
| CZ | Auxiliary relay (compressor) |
| 30CZ1, 2 | Auxiliary relay (check) |
| 30FZ | Auxiliary relay (check) |
| TCZ | Auxiliary relay (check) |
| <SW> | Switch (on) |
| <23WA1,2> | Thermostat (room temp.) |
| CH1, 2 | Crankcase heater |
| C03, 04,11 13,14,16,21, 23, 24, 26 | Connector |
| 26L1, 2 | Thermostat (freeze protection) |

# PRH-5, 8, 10YA1
# PRH-5, 8, 10YA1-L (STANDARD)

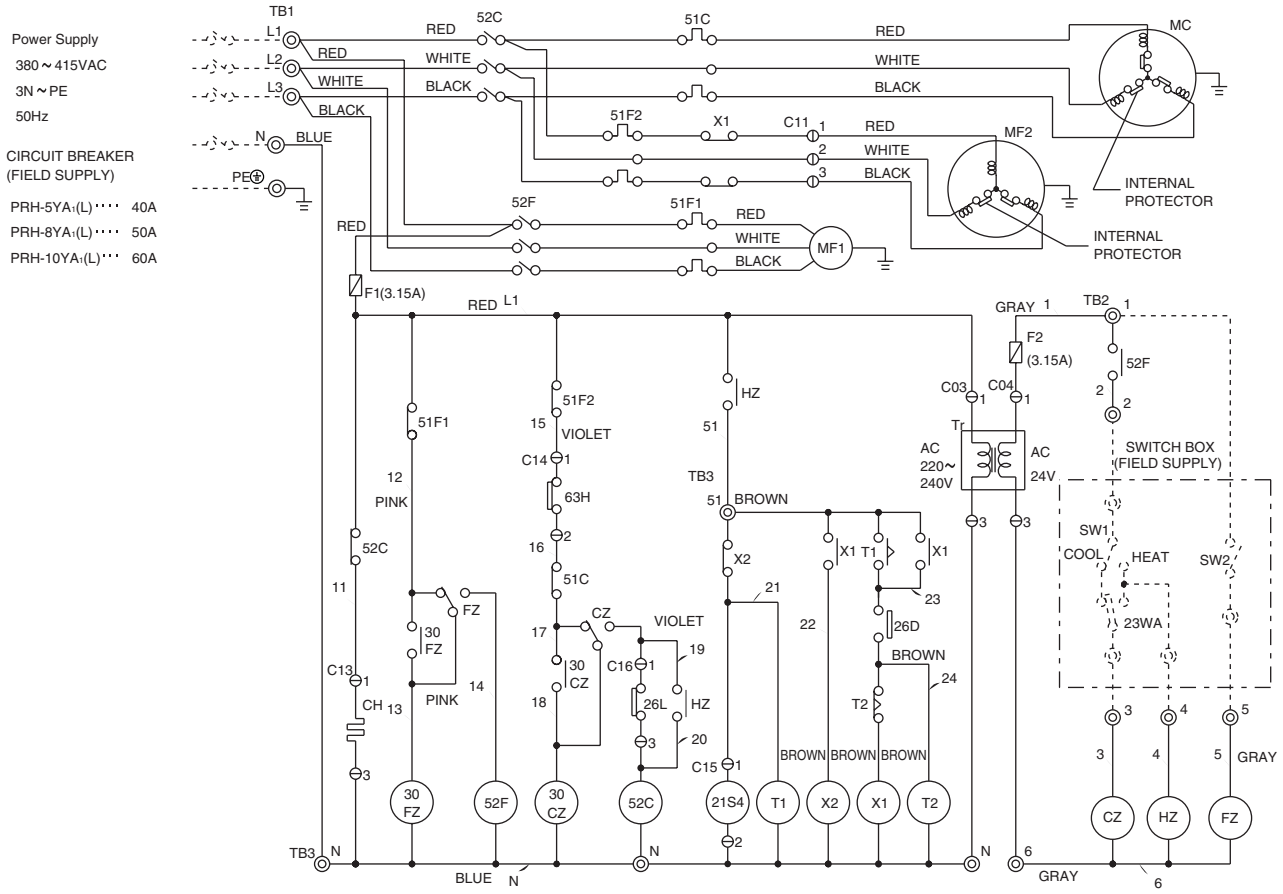


Note:

1.The dotted lines show field wiring.
2.The figure in the parenthesis show field supply parts.
3.Color of earth wire is yellow and green twisting.
4.Specification subject to change without notice.

Caution

1.To protect each fan motors and compressor from abnormal current, Over current relays <51C>, <51F1,2> are installed. Therefore, Do not change factory set value of over current relays.

2.Do not change factory set value of all timers.

Controller connection.

| Symbol | No. | Function | PAC-204RC terminal no. |
|---|---|---|---|
| TB2 | 1 | Power (Active) | 24VAC(L) |
| | 3 | Cooling or Heating operation | COMP1 |
| | 4 | Reversing valve for Heating operation | 4WV |
| | 5 | Fan operation | FAN HI |
| | 6 | Power (Neutral) | 24VAC(N) |

| Symbol | Name |
|---|---|
| MC | Compressor motor |
| MF1 | Fan motor (in door) |
| MF2 | Fan motor (out door) |
| 52C | Contactor (compressor) |
| 52F | Contactor (fan I/D) |
| TB1~3 | Terminal block |
| CH | Crankcase heater |
| F1,2 | Fuse |
| Tr | Transformer |
| 51C | Over current relay(compressor) |
| 51F1, 2 | Over current relay (fan I/D,O/D) |
| 63H | High-pressure switch |
| 26L | Thermostat(freeze protection) |
| 26D | Thermostat (defrost) |
| T1·2 | Timer (defrost) |
| 21S4 | 4-Way valve |
| FZ | Auxiliary relay (fan) |
| CZ | Auxiliary relay (compressor) |
| HZ | Auxiliary relay (4-Way valve) |
| 30FZ·30CZ | Auxiliary relay (check) |
| X1 | Contactor (fan O/D) |
| X2 | Auxiliary relay (defrost) |
| <SW1> | Switch (operation mode) |
| <SW2> | Switch (on-off) |
| <23WA> | Thermostat (room temp.) |

# PRH-15, 20YA1
# PRH-15, 20YA1-L (STANDARD)

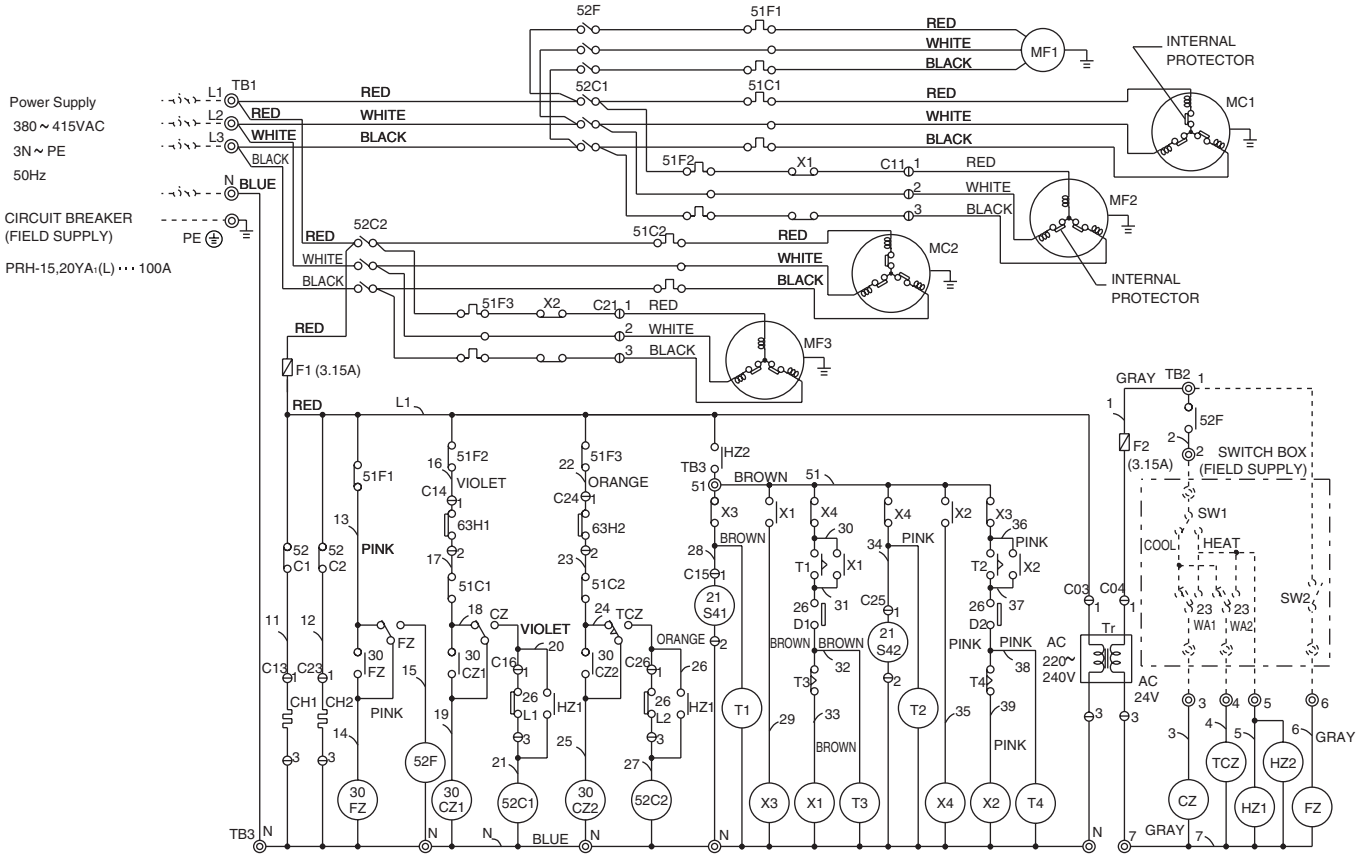


Note:
1.The dotted lines show field wiring.
2.The figure in the parenthesis show field supply parts.
3.Color of earth wire is yellow and green twisting.
4.Specification subject to change without notice.

Caution
1.To protect each fan motors and compressor from abnormal current, Over current relays <51C>, <51F1,2,3> are installed. Therefore, Do not change factory set value of over current relays.
2.Do not change factory set value of all timers.

Controller connection.

| Symbol | No. | Function | PAC-204RC terminal no. |
|---|---|---|---|
| TB2 | 1 | Power (Active) | 24VAC(L) |
| | 3 | Cooling or Heating operation | COMP1 |
| | 4 | Reversing valve for Heating operation | 4WV |
| | 5 | Fan operation | FAN HI |
| | 6 | Power (Neutral) | 24VAC(N) |

| Symbol | Name |
|---|---|
| MC1·2 | Compressor motor |
| MF1 | Fan motor (in door) |
| MF2·3 | Fan motor (out door) |
| 52C1·2 | Contactor (compressor) |
| 52F | Contactor (fan I/D) |
| TB1~3 | Terminal block |
| CH1·2 | Crankcase heater |
| F1,2 | Fuse |
| Tr | Transformer |
| 51C1·2 | Over current relay (compressor) |
| 51F1~3 | Over current relay (fan I/D,O/D) |
| 63H1·2 | High-pressure switch |
| 26L1·2 | Thermostat (freeze protection) |
| 26D1,2 | Thermostat (defrost) |
| T1~4 | Timer (defrost) |
| TCZ | Timer |
| 21S41·42 | 4-Way valve |
| FZ | Auxiliary relay (fan) |
| CZ | Auxiliary relay (compressor) |
| HZ1,2 | Auxiliary relay (4-Way valve) |
| 30FZ,30CZ1·2 | Auxiliary relay (check) |
| X3·4 | Auxiliary relay (defrost) |
| X1·2 | Contactor (fan O/D) |
| <SW1> | Switch (operation mode) |
| <SW2> | Switch (on-off) |
| <23WA> | Thermostat (room temp.) |

# PRH-5, 8, 10YA1
# PRH-5, 8, 10YA1-L
# (SPECIAL ORDER : LOW TEMPERATURE)

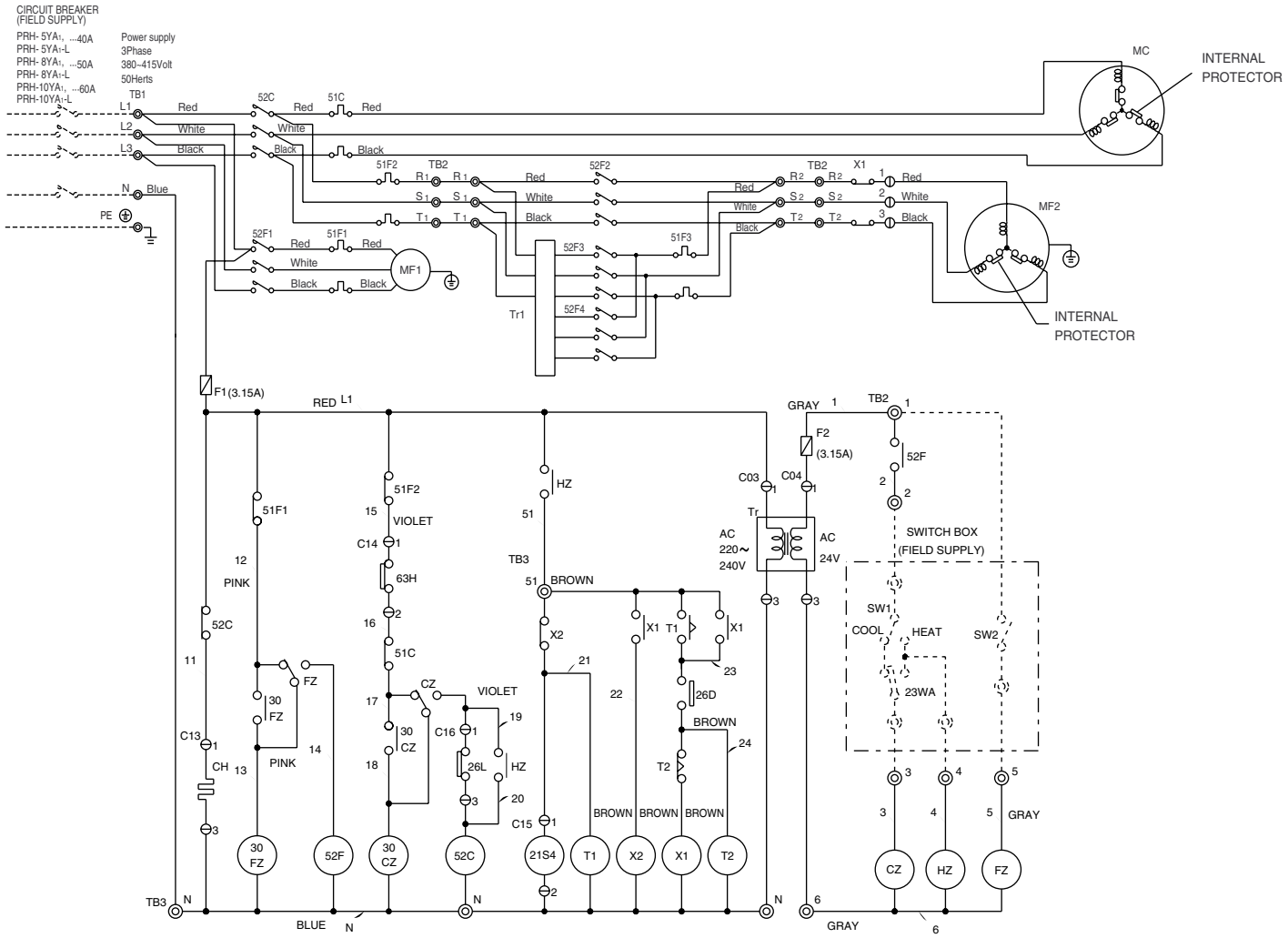


Note:

1.The dotted lines show field wiring.
2.The figure in the parenthesis show field supply parts.
3.Color of earth wire is yellow and green twisting.
4.Specification subject to change without notice.

Caution

1.To protect each fan motors and compressor from abnormal current, Over current relays <51C>, <51F1,2> are installed. Therefore, Do not change factory set value of over current relays.

2.Do not change factory set value of all timers.

Controller connection.

| Symbol | No. | Function | PAC-204RC terminal no. |
|---|---|---|---|
| TB2 | 1 | Power (Active) | 24VAC(L) |
| | 3 | Cooling or Heating operation | COMP1 |
| | 4 | Reversing valve for Heating operation | 4WV |
| | 5 | Fan operation | FAN HI |
| | 6 | Power (Neutral) | 24VAC(N) |

| Symbol | Name |
|---|---|
| MC | Compressor motor |
| MF1 | Fan motor (in door) |
| MF2 | Fan motor (out door) |
| 52C | Contactor (compressor) |
| 52F1,2,3,4 | Contactor (fan I/D) |
| TB1~3 | Terminal block |
| CH | Crankcase heater |
| F1,2 | Fuse |
| Tr,Tr1 | Transformer |
| 51C | Over current relay(compressor) |
| 51F1,2,3 | Over current relay (fan I/D,O/D) |
| 63H | High-pressure switch |
| 26L | Thermostat(freeze protection) |
| 26D | Thermostat (defrost) |
| T1·2 | Timer (defrost) |
| 21S4 | 4-Way valve |
| FZ | Auxiliary relay (fan) |
| CZ | Auxiliary relay (compressor) |
| HZ | Auxiliary relay (4-Way valve) |
| 30FZ·30CZ | Auxiliary relay (check) |
| X1 | Contactor (fan O/D) |
| X2 | Auxiliary relay (defrost) |
| <SW1> | Switch (operation mode) |
| <SW2> | Switch (on-off) |
| <23WA> | Thermostat (room temp.) |

# PRH-15, 20YA1
# PRH-15, 20YA1-L
# (SPECIAL ORDER : LOW TEMPERATURE)

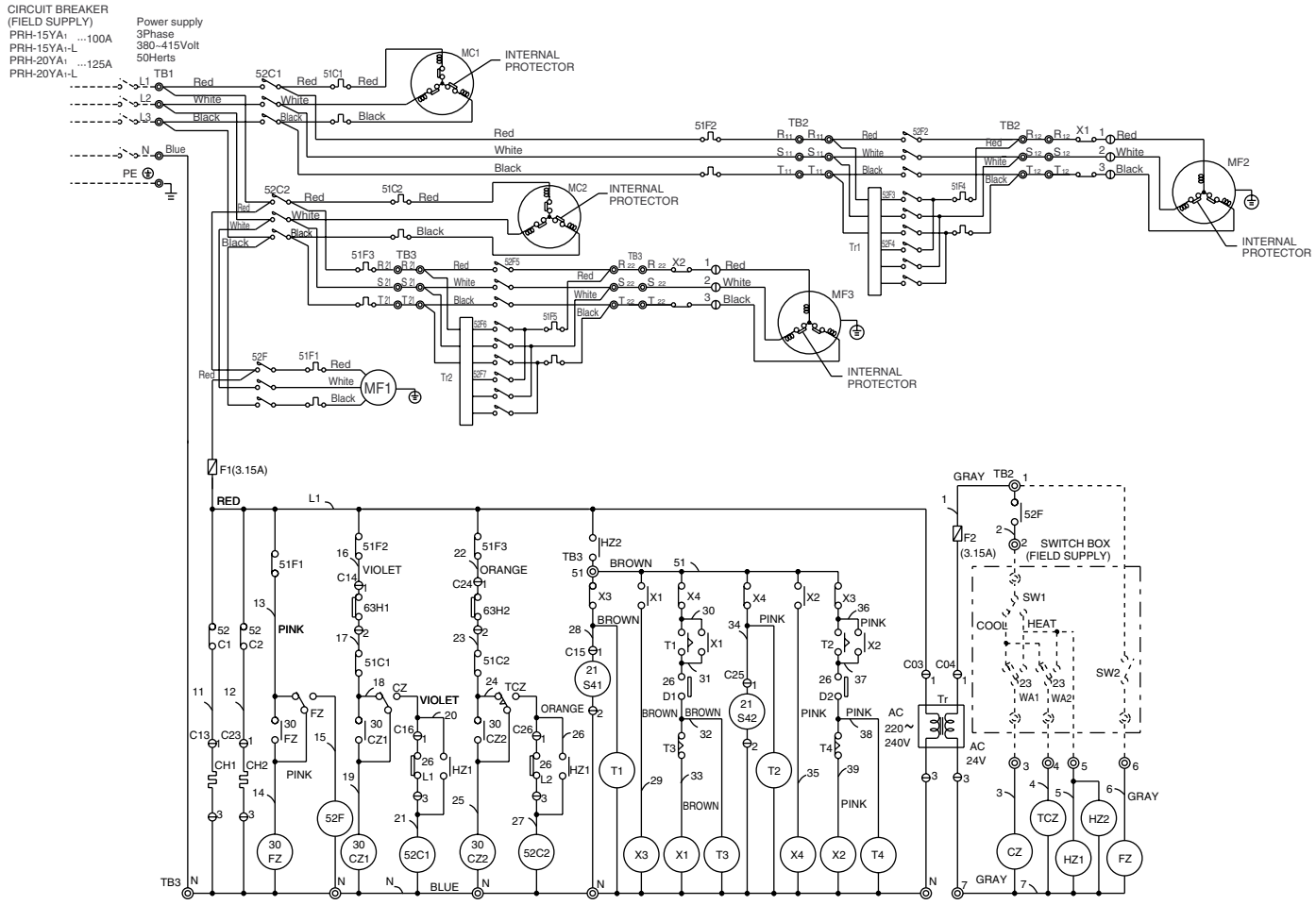


Note:
1.The dotted lines show field wiring.
2.The figure in the parenthesis show field supply parts.
3.Color of earth wire is yellow and green twisting.
4.Specification subject to change without notice.

Caution
1.To protect each fan motors and compressor from abnormal current, Over current relays <51C>, <51F1,2,3> are installed. Therefore, Do not change factory set value of over current relays.
2.Do not change factory set value of all timers.

Controller connection.

| Symbol | No. | Function | PAC-204RC terminal no. |
|---|---|---|---|
| TB2 | 1 | Power (Active) | 24VAC(L) |
| | 3 | Cooling or Heating operation | COMP1 |
| | 4 | Reversing valve for Heating operation | 4WV |
| | 5 | Fan operation | FAN HI |
| | 6 | Power (Neutral) | 24VAC(N) |

| Symbol | Name |
|---|---|
| MC1·2 | Compressor motor |
| MF1 | Fan motor (in door) |
| MF2·3 | Fan motor (out door) |
| 52C1·2 | Contactor (compressor) |
| 52F | Contactor (fan I/D) |
| 52F2~7 | Contactor (fan O/D) |
| TB1~3 | Terminal block |
| CH1·2 | Crankcase heater |
| F1,2 | Fuse |
| Tr | Transformer |
| 51C1·2 | Over current relay (compressor) |
| 51F1~5 | Over current relay (fan I/D,O/D) |
| 63H1·2 | High-pressure switch |
| 26L1·2 | Thermostat (freeze protection) |
| 26D1,2 | Thermostat (defrost) |
| T1~4 | Timer (defrost) |
| TCZ | Timer |
| 21S41·42 | 4-Way valve |
| FZ | Auxiliary relay (fan) |
| CZ | Auxiliary relay (compressor) |
| HZ1,2 | Auxiliary relay (4-Way valve) |
| 30FZ,30CZ1·2 | Auxiliary relay (check) |
| X3·4 | Auxiliary relay (defrost) |
| X1·2 | Contactor (fan O/D) |
| <SW1> | Switch (operation mode) |
| <SW2> | Switch (on-off) |
| <23WA> | Thermostat (room temp.) |

# ELECTRICAL OPERATION FLOW CHARTS

## PR-5, 8, 10YC1

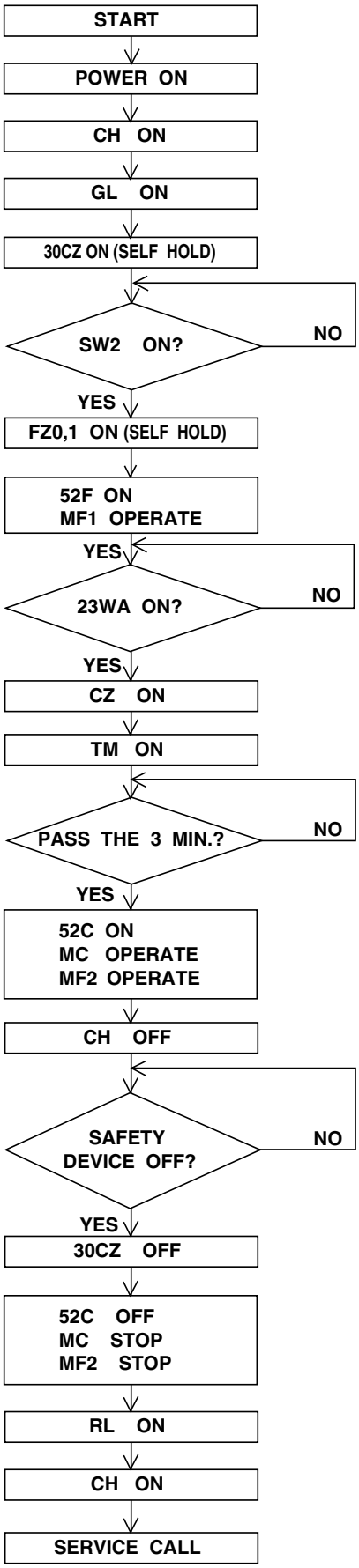

# PRH-5, 8, 10YA1
# PRH-5, 8, 10YA1-L

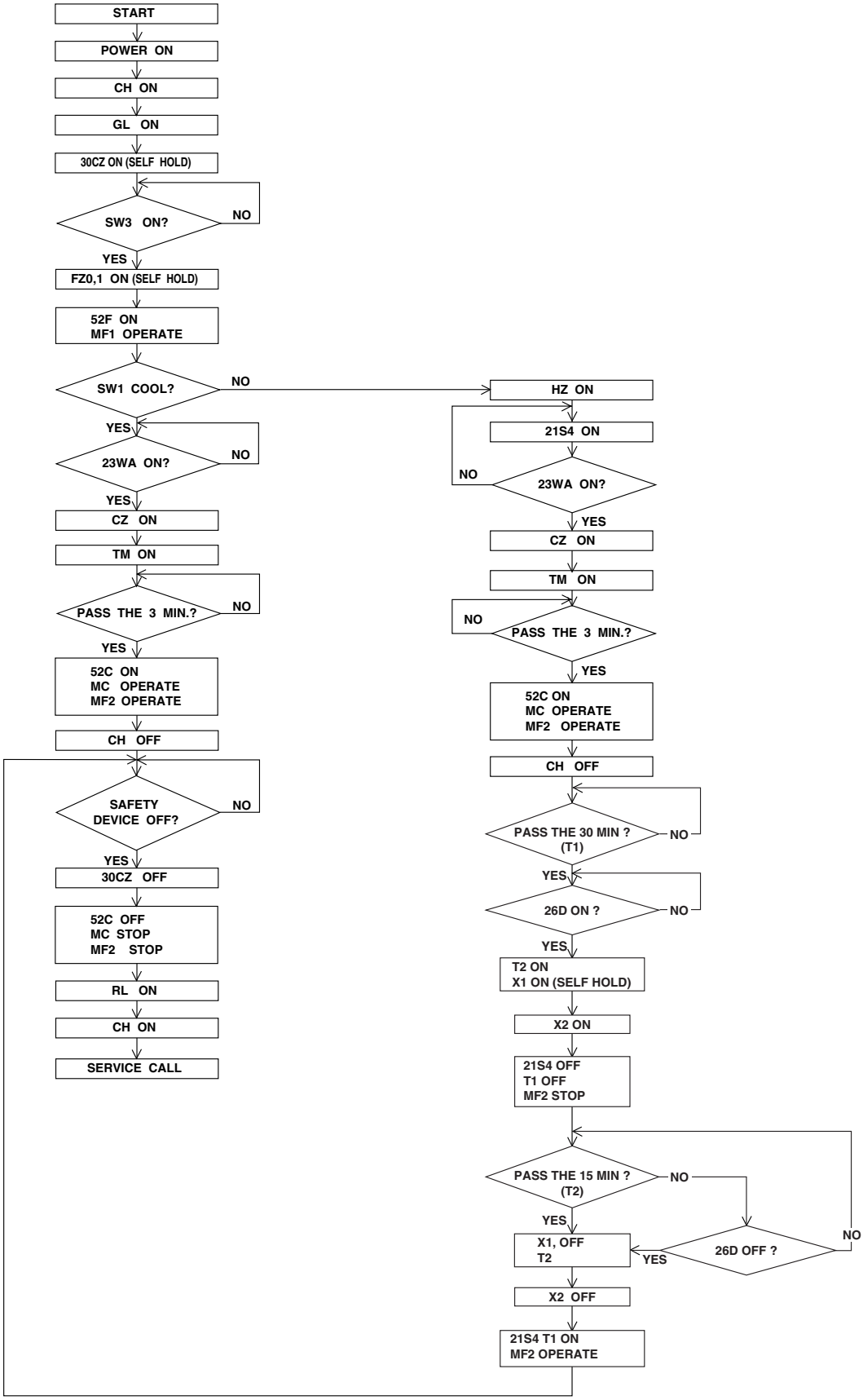

# PR-15, 20YC1

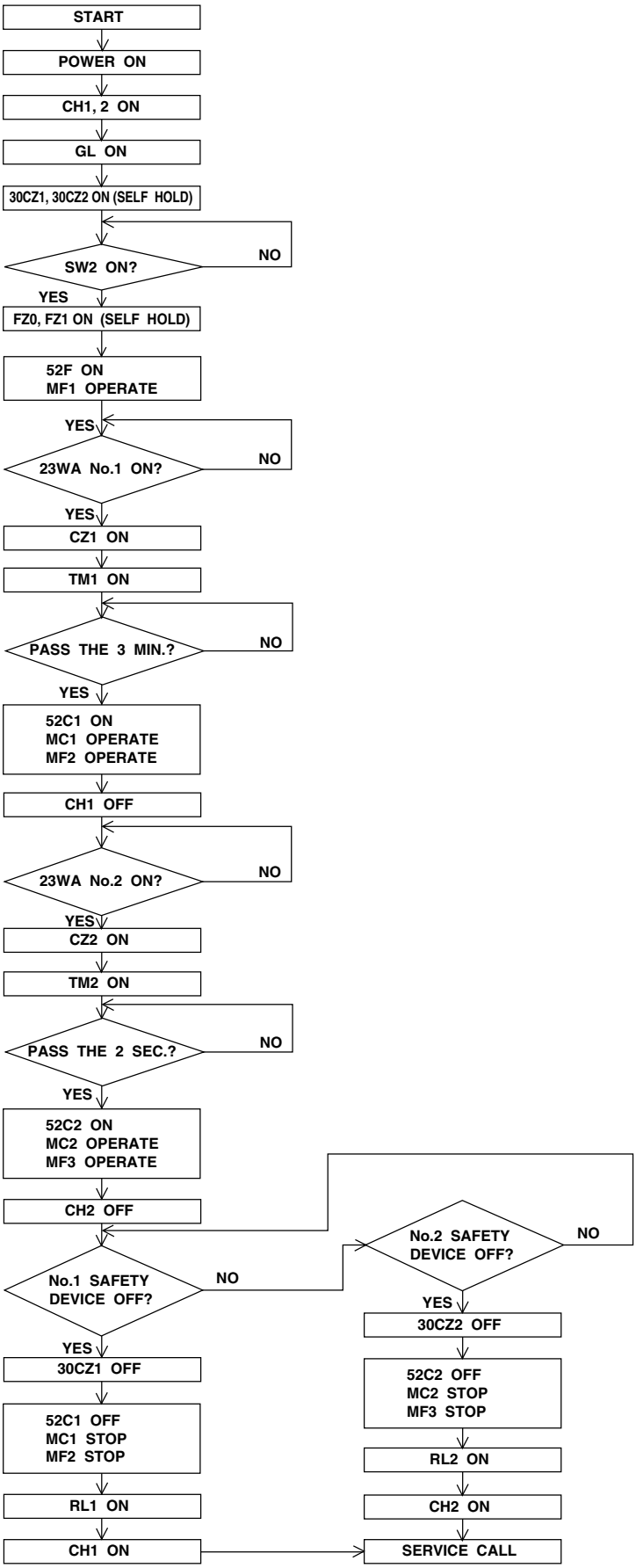
START
POWER ON
CH1, 2 ON
GL ON
30CZ1, 30CZ2 ON (SELF HOLD)
SW2 ON?
NO
YES
FZ0, FZ1 ON (SELF HOLD)
52F ON
MF1 OPERATE
YES
23WA No.1 ON?
NO
YES
CZ1 ON
TM1 ON
PASS THE 3 MIN.?
NO
YES
52C1 ON
MC1 OPERATE
MF2 OPERATE
CH1 OFF
23WA No.2 ON?
NO
YES
CZ2 ON
TM2 ON
PASS THE 2 SEC.?
NO
YES
52C2 ON
MC2 OPERATE
MF3 OPERATE
CH2 OFF
No.2 SAFETY DEVICE OFF?
NO
No.1 SAFETY DEVICE OFF?
NO
YES
30CZ2 OFF
YES
30CZ1 OFF
52C2 OFF
MC2 STOP
MF3 STOP
52C1 OFF
MC1 STOP
MF2 STOP
RL2 ON
RL1 ON
CH2 ON
CH1 ON
SERVICE CALL

# PRH-15, 20YA1
# PRH-15, 20YA1-L

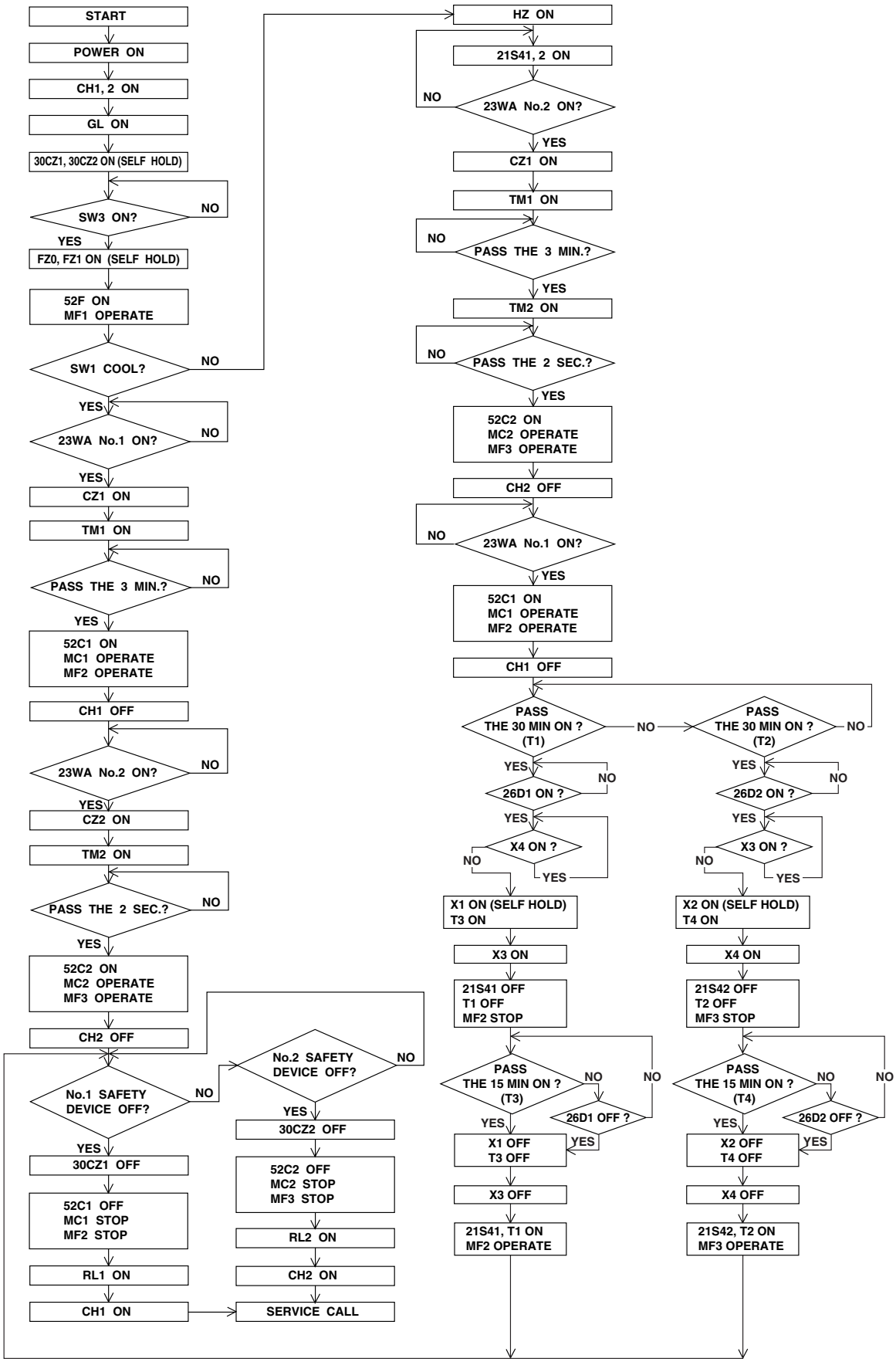

# REFRIGERANT SCHEMATICS

## PR-5YC1

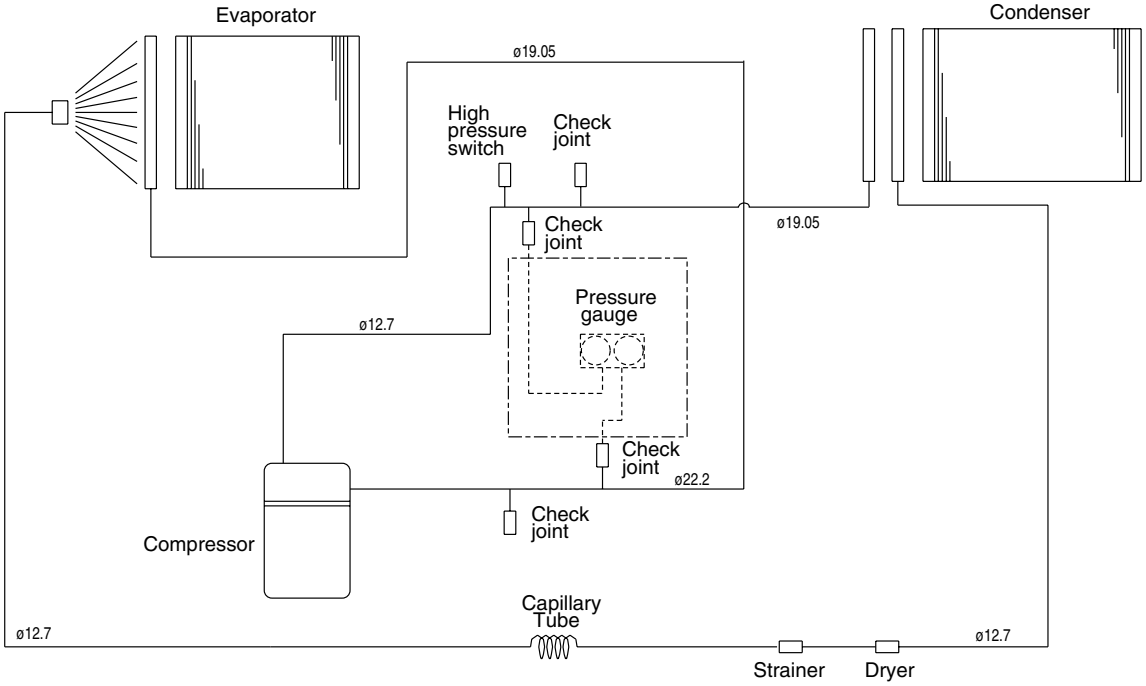


: OPTION

**Notes:** This schematics shows one refrigerant cycle.
PR-15,20YC1 or PRH-15,20YA1 or PRH-15,20YA1-L is composed of two refrigerant cycles.

## PR-8, 10, 15, 20YC1

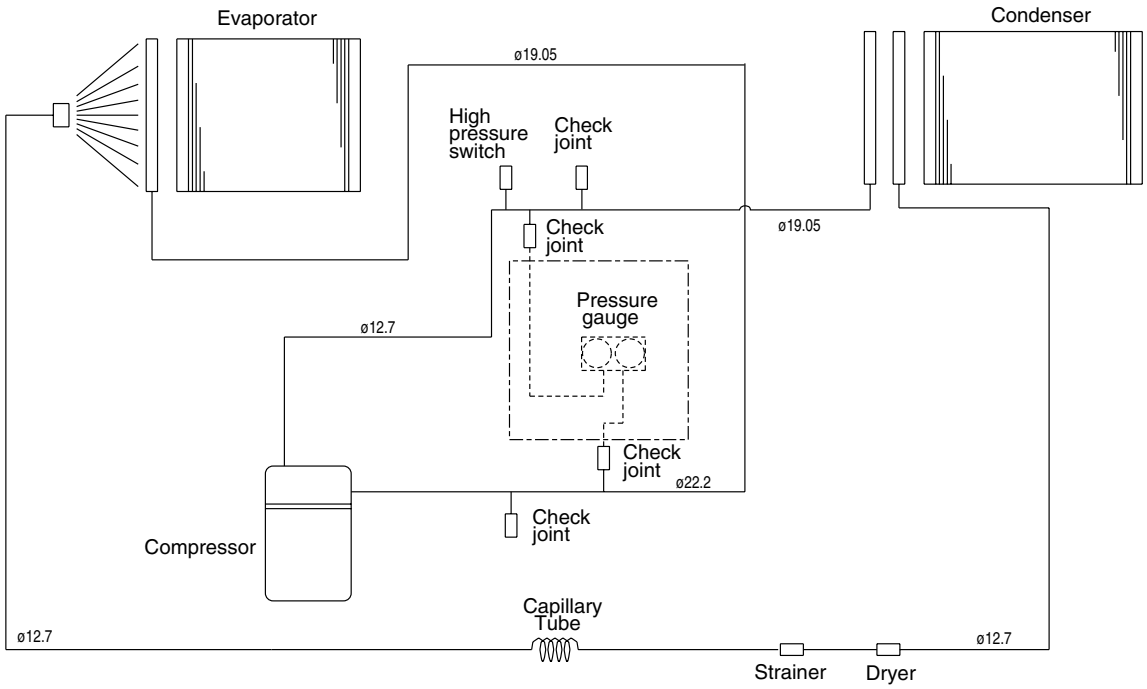


: OPTION

## PRH-5YA$_1$

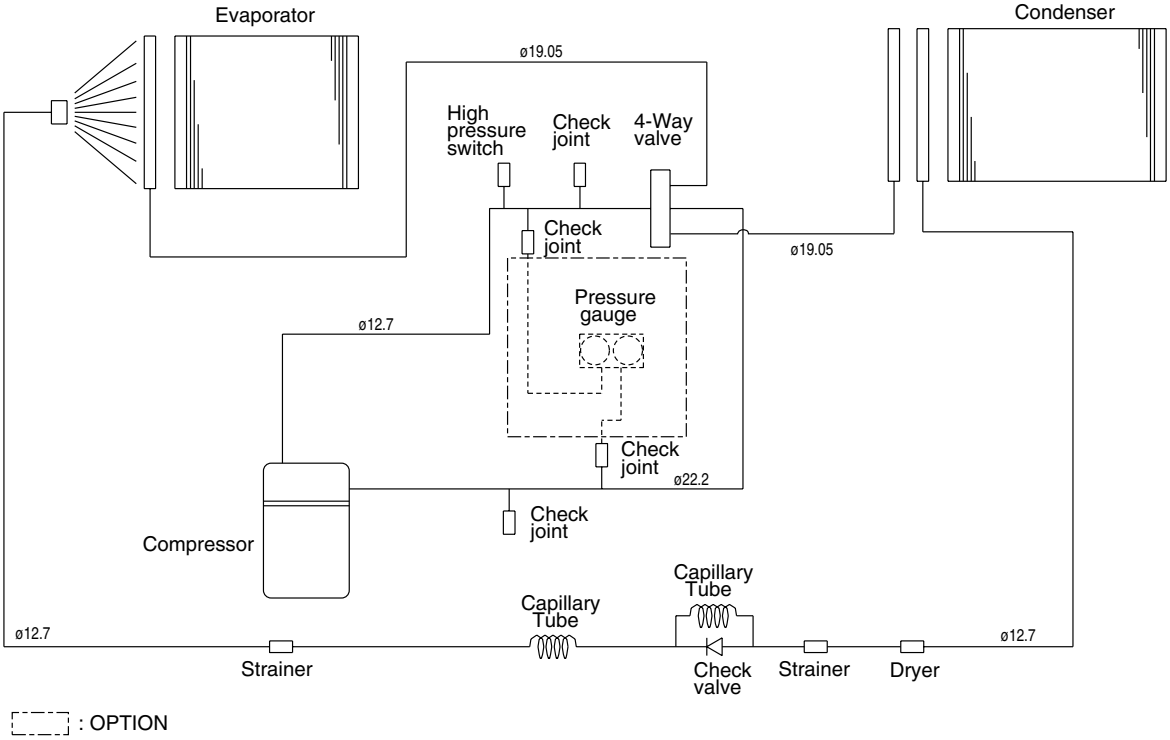


**Notes:** This schematics shows one refrigerant cycle.
PR-15,20YC$_1$ or PRH-15,20YA$_1$ or PRH-15,20YA$_1$-L
is composed of two refrigerant cycles.

## PRH-8, 10, 15, 20YA$_1$

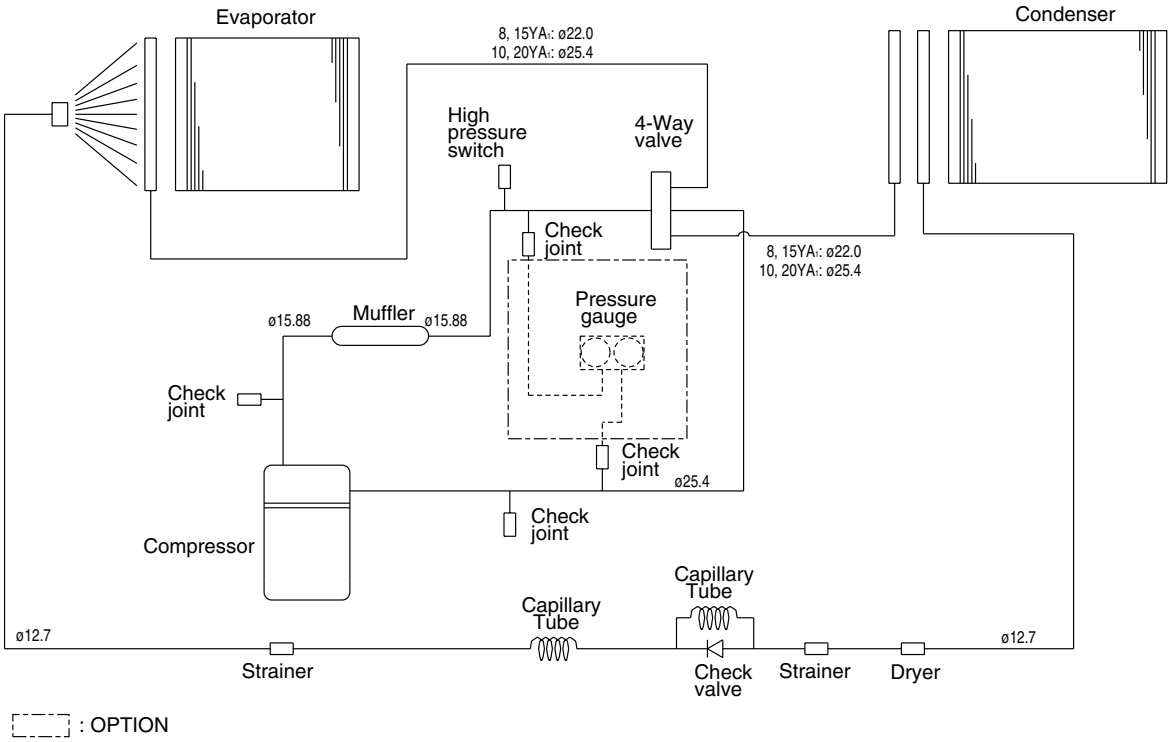

## PRH-5YA$_1$-L

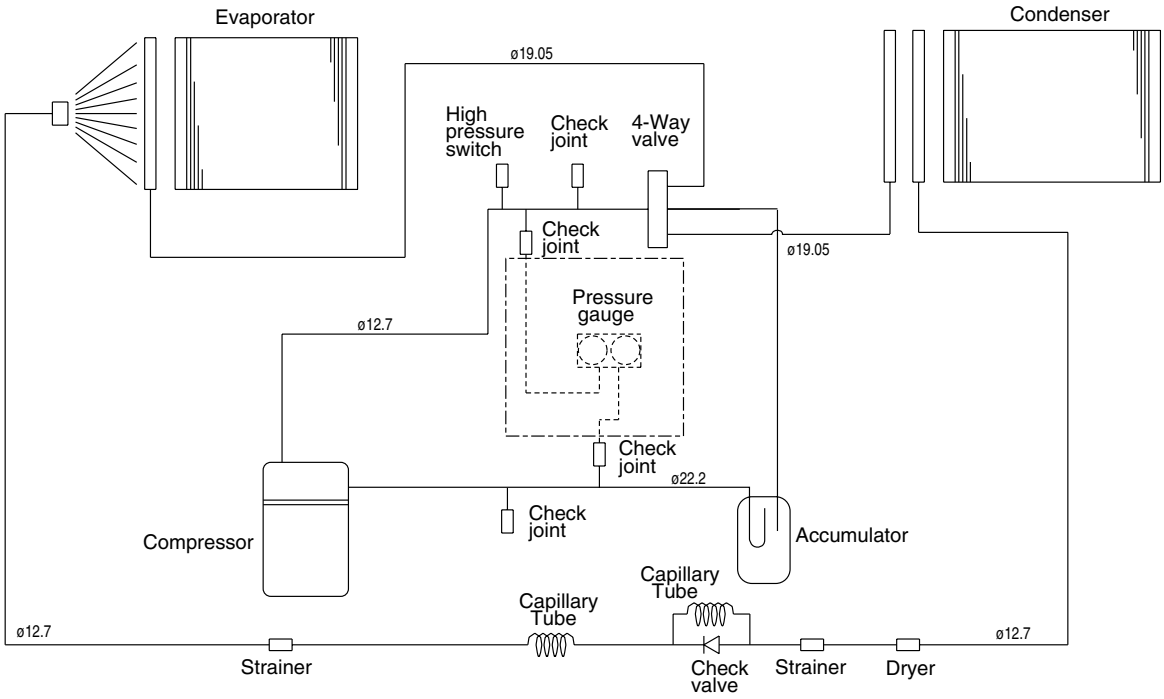


: OPTION

**Notes:** This schematics shows one refrigerant cycle.
PR-15,20YC$_1$ or PRH-15,20YA$_1$ or PRH-15,20YA$_1$-L
is composed of two refrigerant cycles.

## PRH-8, 10,15,20YA$_1$-L

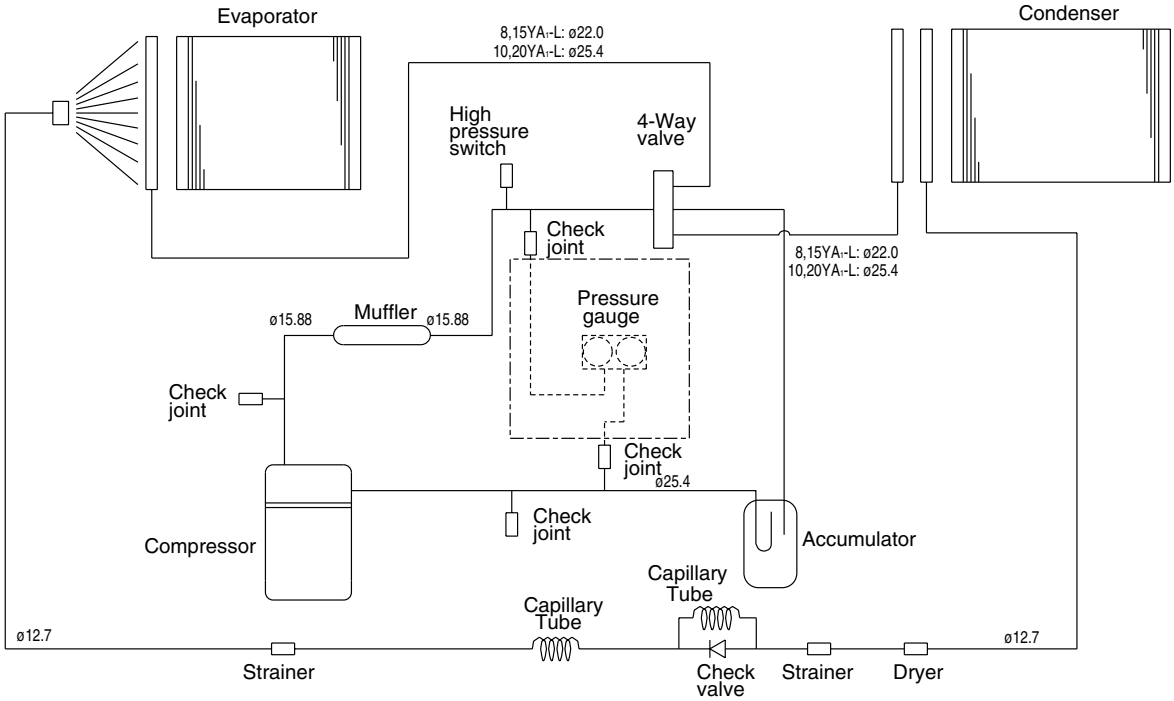


: OPTION

# SAFETY & CONTROL DEVICES

| ITEM | NO. | PR-5YC1<br>PRH-5YA1<br>PRH-5YA1-L | PR-8YC1<br>PRH-8YA1<br>PRH-8YA1-L | PR-10YC1<br>PRH-10YA1<br>PRH-10YA1-L |
|---|---|---|---|---|
| COMPRESSOR OVER CURRENT RELAY | 51C | 26.0A | 27.5A | 31.0A |
| COMPRESSOR INTERNAL THERMOSTAT | - | 110˚C OFF | 120˚C OFF | 130˚C OFF |
| HIGH PRESSURE SWITCH | 63H | 2.94MPa OFF | | |
| FREEZE PROTECTOR | 26L | -2˚C ON | | |
| FROST PROTECTOR (ONLY PRH-YA1,PRH-YA1-L) | 26D | 2˚C ON, 15˚C OFF | | |
| INDOOR FAN MOTOR OVER CURRENT RELAY | 51F1 | 2.3A | 3.2A | 3.6A |
| OUTDOOR FAN MOTOR OVER CURRENT RELAY | 51F2 | 2.0A | | |
| OUTDOOR FAN MOTOR INTERNAL THERMOSTAT | - | 150˚C OFF | | |
| FUSE (CONTROL CIRCUIT) | F | 3.15A | | |
| FUSE (OPERATION CIRCUIT) | F | 3.15A | | |
| OUTDOOR FAN MOTOR OVER CURRENT RELAY<br>(USE THE OPTIONAL PARTS : LOW AMBIENT PARTS) | 51F3 | 2.0A | | |

| ITEM | NO. | PR-15YC1<br>PRH-15YA1<br>PRH-15YA1-L | PR-20YC1<br>PRH-20YA1<br>PRH-20YA1-L |
|---|---|---|---|
| COMPRESSOR OVER CURRENT RELAY | 51C1,2 | 27.5A | 31.0A |
| COMPRESSOR INTERNAL THERMOSTAT | - | 120˚C OFF | 130˚C OFF |
| HIGH PRESSURE SWITCH | 63H1,2 | 2.94MPa OFF | |
| FREEZE PROTECTOR | 26L1,2 | -2˚C ON | |
| FROST PROTECTOR (ONLY PRH-YA1,PRH-YA1-L) | 26D1,2 | 2˚C ON, 15˚C OFF | |
| INDOOR FAN MOTOR OVER CURRENT RELAY | 51F1 | 5.0A | 6.6A |
| OUTDOOR FAN MOTOR OVER CURRENT RELAY | 51F2,3 | 2.0A | |
| OUTDOOR FAN MOTOR INTERNAL THERMOSTAT | - | 150˚C OFF | |
| FUSE (CONTROL CIRCUIT) | F | 3.15A | |
| FUSE (OPERATION CIRCUIT) | F | 3.15A | |
| OUTDOOR FAN MOTOR OVER CURRENT RELAY<br>(USE THE OPTIONAL PARTS : LOW AMBIENT PARTS) | 51F4,5 | 2.0A | |

# ACCESSORY AVAILABILITY

| DESCRIPTION | MODEL NAME | PARTS CODE | | | | | | | | |
|---|---|---|---|---|---|---|---|---|---|---|
| | | PR-5YC1 | PRH-5YA1 | PRH-5YA1-L | PR-8YC1 | PRH-8YA1 | PRH-8YA1-L | PR-10YC1 | PRH-10YA1 | PRH-10YA1-L |
| Low temperature cooling | PR- YC1 | ○ PAC-201LC | - | - | ○ PAC-202LC | - | - | ○ PAC-203LC | - | - |
| | PRH- YA1 | - | ○ PAC-201LC | - | - | ○ PAC-202LC | - | - | ○ PAC-203LC | - |
| | PRH- YA1-L | - | - | ○ PAC-201LC | - | - | ○ PAC-202LC | - | - | ○ PAC-203LC |
| Pressure gauge | PR- YC1 | ○ PAC001PG | - | - | ○ PAC002PG | - | - | ○ PAC003PG | - | - |
| | PRH- YA1 | - | □ PAC001PG | - | - | □ PAC002PG | - | - | □ PAC003PG | - |
| | PRH- YA1-L | - | - | ○ PAC001PG | - | - | ○ PAC002PG | - | - | ○ PAC003PG |
| Fin guard | PR- YC1 | □ PAC101FG | - | - | □ PAC102FG | - | - | □ PAC103FG | - | - |
| | PRH- YA1 | - | □ PAC101FG | - | - | □ PAC102FG | - | - | □ PAC103FG | - |
| | PRH- YA1-L | - | - | □ PAC101FG | - | - | □ PAC102FG | - | - | □ PAC103FG |
| LCD remote controller | - | PAC-204RC | | | | | | | | |

| DESCRIPTION | MODEL NAME | PARTS CODE | | | | | |
|---|---|---|---|---|---|---|---|
| | | PR-15YC1 | PRH-15YA1 | PRH-15YA1-L | PR-20YC1 | PRH-20YA1 | PRH-20YA1-L |
| Low temperature cooling | PR- YC1 | ○ PAC-201LCX2(PCS) | - | - | ○ PAC-201LCX2(PCS) | - | - |
| | PRH- YA1 | - | ○ PAC-201LCX2(PCS) | - | - | ○ PAC-201LCX2(PCS) | - |
| | PRH- YA1-L | - | - | ○ PAC-201LCX2(PCS) | - | - | ○ PAC-201LCX2(PCS) |
| Pressure gauge | PR- YC1 | ○ PAC001PGX2(PCS) | - | - | ○ PAC001PGX2(PCS) | - | - |
| | PRH- YA1 | - | □ PAC001PGX2(PCS) | - | - | □ PAC001PGX2(PCS) | - |
| | PRH- YA1-L | - | - | □ PAC001PGX2(PCS) | - | - | □ PAC001PGX2(PCS) |
| Fin guard | PR- YC1 | □ PAC104FG | - | - | □ PAC105FG | - | - |
| | PRH- YA1 | - | □ PAC104FG | - | - | □ PAC105FG | - |
| | PRH- YA1-L | - | - | □ PAC104FG | - | - | □ PAC105FG |
| LCD remote controller | - | PAC-204RC | | | | | |

○ :Factory install

□ :Field install

# PHYSICAL DATA

| [PRODUCT] | | ROOFTOP AIR-COOLED HEATPUMP PACKAGED AIR CONDITIONERS | | | | |
|---|---|---|---|---|---|---|
| Product type | | PR,PRH,PRH-L SERIES | | | | |
| Product number : Cooling type | | PR-5YC1 | PR-8YC1 | PR-10YC1 | PR-15YC1 | PR-20YC1 |
| Product number : Heat pump | | PRH-5YA1 | PRH-8YA1 | PRH-10YA1 | PRH-15YA1 | PRH-20YA1 |
| Product number : Heat pump | | PRH-5YA1-L | PRH-8YA1-L | PRH-10YA1-L | PRH-15YA1-L | PRH-20YA1-L |
| Capacity | kw | 17.6 | 28.1 | 35.2 | 52.8 | 70.3 |
| Cooling capacity (AS1861) | kW | 16.3 | 23.8 | 29.7 | 46.3 | 60.8 |
| Sensible Cooling capacity (AS1861) | kW | 13 | 19.7 | 25.3 | 38.4 | 50.2 |
| Cooling power consumption (Input) | kW | 5.4 | 8.3 | 11.4 | 16.8 | 22.7 |
| ByPass Factor | | 0.19 | 0.24 | 0.18 | 0.18 | 0.11 |
| Heating capacity (AS1861) (Only PRH-YA1,PRH-YA1-L) | kW | 15.1 | 23 | 32 | 45.5 | 61.2 |
| Heating power consumption (Only PRH-YA1,PRH-YA1-L) | kW | 4.6 | 7 | 9.6 | 14.4 | 19.3 |
| **[ELECTRICAL]** | | | | | | |
| Design voltage | Volts | 415 | | | | |
| Cycles | Hz | 50 | | | | |
| Phases | | 3 | | | | |
| Power supply | Volts | 415 | | | | |
| Control voltage | Volts | 240/24 | | | | |
| Maximum voltage | Volts | 415 | | | | |
| Minimum voltage | Volts | 380 | | | | |
| Approx. starting current | Amps | 62 | 87 | 100 | 115 | 135 |
| Unit current (Nominal voltage and AS1861 maximum conditions) | Amps | 12.8 | 20.6 | 25.7 | 37.9 | 50.9 |
| Fan motor hp | HP | 1.0 | 1.5 | 2 | 3 | 4 |
| Fan motor current | Amps | 2.26 | 2.90 | 3.28 | 4.72 | 6.06 |
| Fan motor speed | rpm | 1,400 | 1,410 | | 1,420 | |
| **[COMPRESSOR]** | | | | | | |
| Make | | COPELAND | | | | |
| Model | | CRNQ-0500-TFD | QR90K1-TFD | QR12M1-TFD | QR90K1-TFD | QR12M1-TFD |
| Type | | HERMETIC LINE START (RECIPROCATING) | | | | |
| Quantity | | 1 | 1 | 1 | 2 | 2 |
| Nominal motor hp | HP | 5 | 7.5 | 10 | 2×7.5 | 2×10 |
| Locked rotor current | Amps | 59.5 | 83.4 | 95.2 | 83.4 | 95.2 |
| Normal run current (AS1861) | Amps | 7.65 | 11.7 | 15.62 | 2×11.74 | 2×15.22 |
| Swept volume | cc/rev | 101.92 | 177.45 | 221.8 | 2×177.45 | 2×221.8 |
| Bore | mm | 49.78 | 55.58 | | | |
| Stroke | mm | 26.19 | 18.29 | 22.86 | 18.29 | 22.86 |
| Speed | rpm | 2,900 | | | | |
| Number of cylinders | | 2 | 4 | | | |
| Oil charge | ml | 2,070 | 3,250 | | 2×3,250 | |
| Type of oil | | Calumet R015 or Witco 3GS | | | | |
| Crankcase heater | watts | 40 | 70 | | 2×70 | |
| **[REFRIGERATIONSYSTEM]** | | | | | | |
| Refrigerant | | R22 | | | | |
| Refrigerant charge per circuit | kg | 3.6 | 4.6 | 5.8 | 2×4.6 | 2×5.8 |
| Number of refrigerant controls | | 1 | 1 | 1 | 2 | 2 |
| Refrigerant control | | Capillary tube | | | | |
| Reverse cycle valve (Only PRH-YA,PRH-YA-L) | | 4-Way valve | | | | |
| Defrost system (Only PRH-YA,PRH-YA-L) | | Reverse cycle defrost | | | | |
| **[EVAPORATOR]** | | | | | | |
| Quantity | | 1 | 1 | 1 | 2 | 2 |
| Face area | sq.m | 0.53 | 0.69 | | 2×0.65 | |
| Rows deep | | 3 | 3 | 4 | 3 | 4 |
| Rows high | | 26 | 26 | 26 | 30 | 30 |
| Finned length | mm | 800 | 1,046 | | 2×850 | |
| Face velocity | m/s | 1.7 | 2.0 | 2.4 | 2.2 | 2.4 |
| Fins per meter | | 512 | 512 | 512 | 473 | 512 |
| Fin material thickness | mm | 0.12 | | | | |
| Fin material | | Aluminium | | | | |
| Fins pitch | mm | 1.95 | 1.95 | 1.95 | 2.11 | 1.95 |
| Tube diameter | mm | 9.52 | | | | |
| Gauge of copper tube | mm | 0.35 | | | | |
| Number of circuits | | 10 | 13 | 17 | 11 | 15 |

| [PRODUCT] | | ROOFTOP PACKAGE AIR COOLED HEATPUMP AND COOLING ONLY UNITS | | | | |
|---|---|---|---|---|---|---|
| Product type | | PRH SERIES | | | | |
| Product number : Heat pump | | PRH-5YA1 | PRH-8YA1 | PRH-10YA1 | PRH-15YA1 | PRH-20YA1 |
| **[INDOORAIR CIRCUIT]** | | | | | | |
| Number of blowers | | 1 | 2 | 2 | 2 | 2 |
| Diameter of blowers | mm | 253 | | | 384.5 | |
| Width of blowers | mm | 182 | | | 374 | |
| Blower drive | | Belt drive | | | | |
| Fan motor output | kW | 0.75 | 1.1 | 1.5 | 2.2 | 3.0 |
| Normal fan motor run current | A | 2.26 | 2.90 | 3.28 | 4.72 | 6.06 |
| Air quantity | L/s | 900 | 1,400 | 1,660 | 2,800 | 3,160 |
| External static pressure | Pa | 100 | | | 200 | |
| Supply air dimensions (h × w) | mm × mm | 300 × 850 | 300 × 1,150 | | 428 × 1,820 | |
| Return air dimensions (h × w) | mm × mm | 410 × 900 | 410 × 1,200 | | 464 × 1,879 | |
| **[CONDENSER]** | | | | | | |
| Quantity | | 1 | 1 | 1 | 2 | 2 |
| Facearea | sq.m | 1.3 | 1.12 | 1.46 | 2 × 1.07 | 2 × 1.32 |
| Rows deep | | 3 | 3 | 3 | 3 | 3 |
| Rowshigh | | 30 | 23 | 30 | 30 | 37 |
| Finnedlength | mm | 1,700 | 1,920 | | 2 × 1,400 | |
| Face velocity | m/s | 1.2 | 2.8 | 2.1 | 2.9 | 2.3 |
| Fins per meter | | 473 | 473 | 473 | 473 | 473 |
| Fin material thickness | mm | 0.12 | | | | |
| Fin material | | Aluminium | | | | |
| Fins pitch | mm | 2.11 | 2.11 | 2.11 | 2.11 | 2.11 |
| Tube diameter | mm | 9.52 | | | | |
| Gauge of copper tube | mm | 0.35 | | | | |
| Number of circuits | | 11 | 11 | 15 | 11 | 14 |
| **[OUTDOOR AIR CIRCUIT]** | | | | | | |
| Number of fans | | 1 | 1 | 1 | 2 | 2 |
| Diameter of fans | mm | 600 | 800 | | | |
| Pitch of fans | mm | - | - | - | 990 | |
| Fan drive | | Direct drive | | | | |
| Fan motor output | kw | 0.15 | 0.35 | 0.35 | 2 × 0.35 | 2 × 0.35 |
| Quantity | | 1 | 1 | 1 | 2 | 2 |
| Normal fan motor run current | Amps | 0.6 | 1.3 | 1.3 | 2 ×1.3 | 2 × 1.3 |
| Fan motor speed | rpm | 650 | 645 | | | |
| Air quantity | L/s | 1,583 | 3,083 | | 2 × 3,083 | |
| **[ENCLOSURE AND FRAME]** | | | | | | |
| height | mm | 1,000 | | | 1,200 | |
| Dimension width | mm | 1,000 | 1,300 | | 1,990 | |
| depth | mm | 1,600 | | | 1,840 | |
| Color | | Munsell 5Y8/1 | | | | |
| Panel thickness | mm | 1.2 | | | | |
| Condensate drain size | mm | 25.4 | | | | |
| Weight | kg | 299 | 393 | 413 | 698 | 729 |
| Sound power level | dbA | 73 | 75 | 75 | 79 | 79 |
| Sound pressure level | dbA | 62 | 64 | 64 | 68 | 68 |

# INSTALLATION

All series of air conditioners are designed for outdoor installations and are to be placed on a slab or rooftop, however if the air conditioner is to be installed in a plant room application, please contact your equipment supplier prior to installation.
Access for both service and installation must be provided to the compressors, control wiring and fans as shown below.

## 1. Clearances

(1) Care must be taken to prevent recirculation of the condenser air. To stabilize compressor condensing pressures it is recommended that wherever possible the condenser air inlet side be faced away from prevailing winds.
(2) For rooftop installation, the type of mounting base depends on the roof construction. A built-up roof may not support the weight of the unit and so it may be necessary to support the unit by adding structural members below it.
(3) The units are equipped with hoisting plates for rigging and hoisting of the unit. The hoisting plates are located in the base of the unit. When hoisting the unit with a crane, spreader bars must be used to prevent damage to side panels by the supporting cables.

**PR-5~10YC1**
**PRH-5~10YA1**
**PRH-5~10YA1-L**

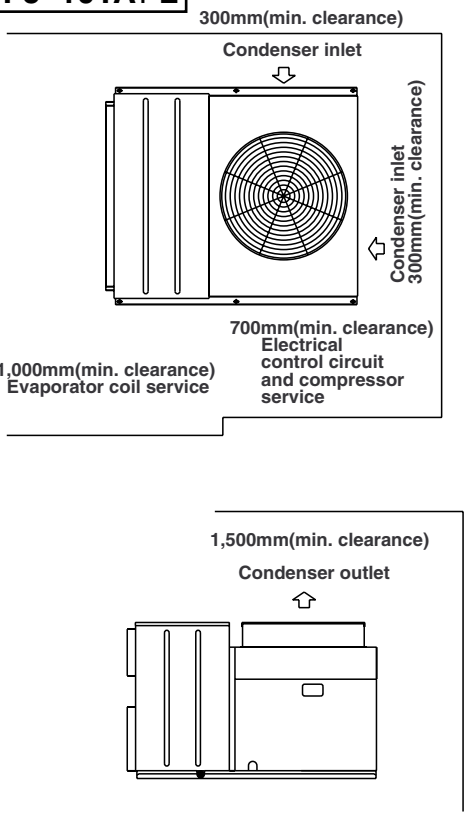


**PR-15,20YC1**
**PRH-15,20YA1**
**PRH-15,20YA1-L**

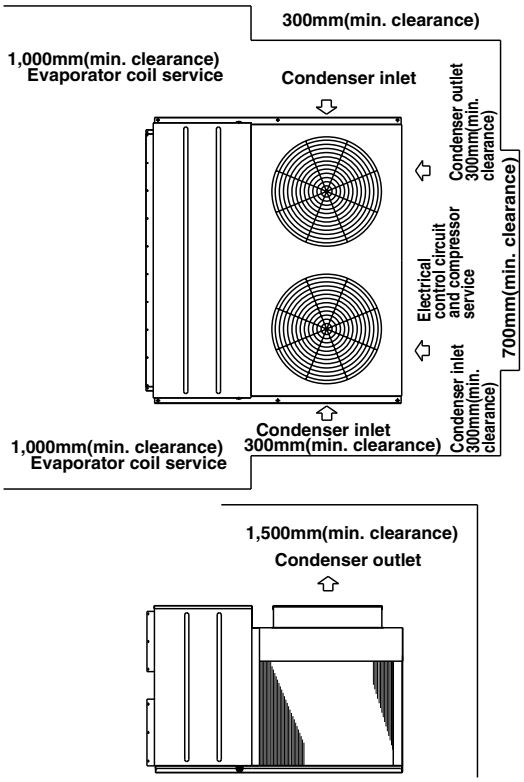


## 2. Installation of the unit

(1) The figure shows the use of the roof curb available for mounting these units.
(2) The curb should be sealed and fixed to the roof by weather stripping. A suggested means of sealing the unit and roof curb is shown below.

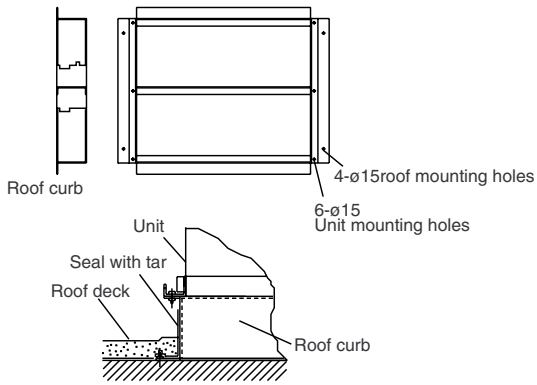

## 3. Duct construction

(1) All series units are equipped with horizontal supply and return air openings. Duct connection to the unit should be made with duct flanges and secured directly to the air openings with flexible duct connectors to avoid normal noise transmission.
(2) For vertical air supply, a field supply plenum should be used.
The figure below shows the recommended method for duct connection.
(3) To prevent air leakage, all duct seams should be taped. Ducts run in air spaces that are not air-conditioned must be insulated and provided with a vapor barrier. Ducts exposed to the outside must be weatherproofed. For quiet operation, we recommend that the insulation on the supply duct be placed inside, lining the duct.
(4) Where ducts from the outside enter a building, the duct openings in the building should be sealed with weather stripping to prevent rain, duct, sand,etc. from entering the building.
(5) Correctly sized filters must be fitted and there is no provision within the unit, however the filters may be installed in the return air.

Duct connection with a vertical air plenum

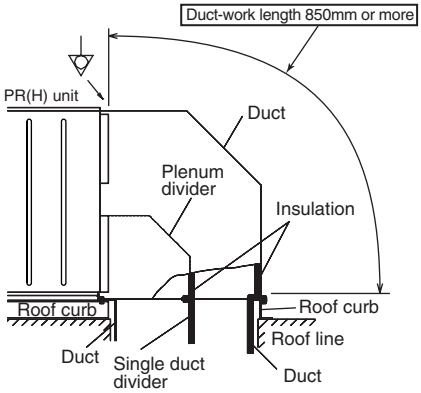


## 4. Lifting method

When the unit is to be lifted and moved, attach ropes to the suspension plates (4 pcs) provided on the top of the unit.
When the unit is lifted, it is center of gravity tends to shift the unit one side and so balance, such as that in the figure below, should be attained.
The angles at which the ropes suspend the unit should be at least 60˚ at the compressor end and at least 45˚ at the condenser end.
Care should be taken to avoid contact with the main unit while carrying.
<u>It is necessary to protect the unit with the blanket so that the ropes should not injure the unit.</u>

Hook as directly aligned over the center of gravity as possible.

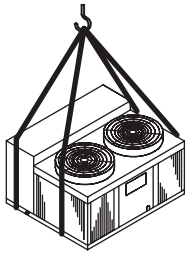

## 5. Refrigerant charge

An additional charge is unnecessary.
The table below shows the amount of the charge when the factory is shipped.

| | PR-5<br>PRH-5 | PR-8<br>PRH-8 | PR-10<br>PRH-10 | PR-15<br>PRH-15 | PR-20<br>PRH-20 |
|---|---|---|---|---|---|
| Refrigerant charge per circuit (kg) | 3.6 | 4.6 | 5.8 | 2x4.6 | 2x5.8 |

## 6. Drain piping

(1) A 1 FPT condensate drain fitting is provided. The drain pipe can be connected at the right or left side. Under standard specifications, it is connected at the left side and the right side is covered.
(2) The drain pipe must be provided with a trap on the outside of the unit and also installed at an incline for proper drainage, as shown below.
(3) To prevent condensate formation and leakage, provide the drain pipe with insulation to safeguard against sweating.
(4) Upon completion of the piping work, check that there is no leakage and that the water drains off properly.

The drain piping should have a drain trap.

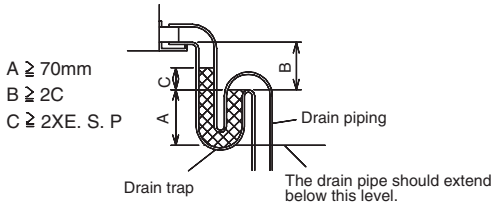


Note: ESP = External Static Pressure
Drain trap for condensate

# 7. Electric wiring

Construct the earth connection
All electrical work must be carried out by a suitable qualified electrical trades-person and in accordance with local supply authority requirements and associated regulators. The range of working voltage is within ±10% voltage of power supply.
The unit is to be wired directly from an electrical distribution board either by a circuit breaker (preferred) or HRC fuse.

Fix power source wiring to control box by using buffer bushing for sensible force. (PG connection or the like)
Connect control wiring to control terminal block through the knockout hole of control box using ordinary bushing.

NOTE: Earth wiring must be connected.

Arrangement such as terminal block in control box.

Control module of unit (PR-5,8,10)

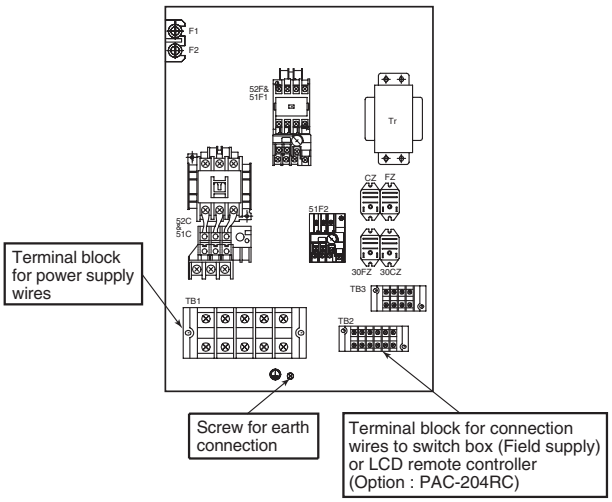


Control module of unit (PR-15, 20)

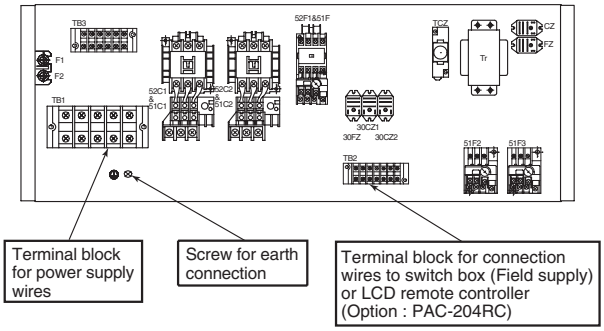


Control module of unit (PRH-5, 8, 10)

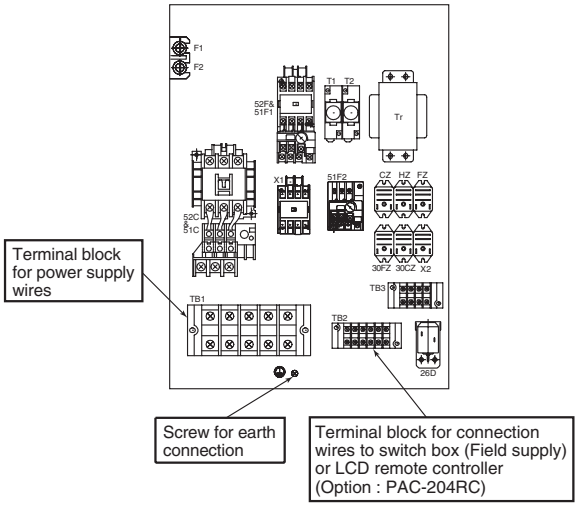


Control module of unit (PRH-15, 20)

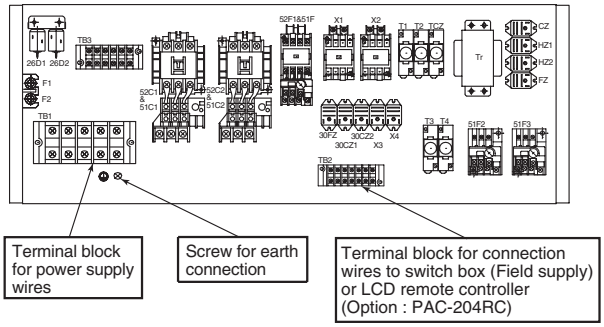


Method for connecting electric wire

Please do the wiring after consulting the electric power company of jurisdiction beforehand in the instruction.

(1) The entire wiring diagram of unit.

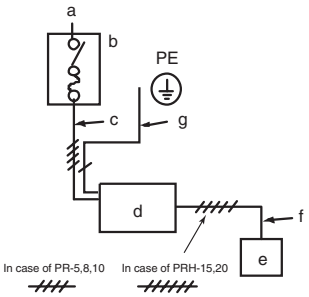


| | |
|---|---|
| a. | Power supply |
| b. | Main switch/fuse (field supply) |
| c. | Power supply wiring for unit |
| d. | unit |
| e. | LCD remote controller (Option: PAC-204RC) |
| f. | Connection wiring for unit / remote controller (no polarity) |
| g. | Earth |

(2) Electrical wiring

Remove the panel on the right side (PRH-5~10, PR-5~10) or the rear side (PRH-15, 20, PR-15, 20) of the unit and connect the units power supply wiring to the proper terminals in the control box, as shown below.

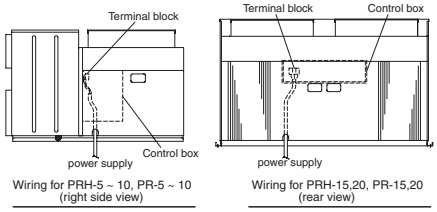

(3) LCD remote controller (OPTION:PAC-204RC)

(3)-1. Outline and inside drawing

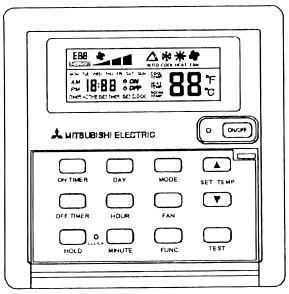


Outline (Key cover open)

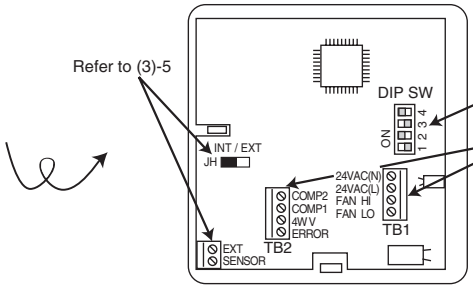


Controller board

(3)-2. Installation

(1) Decide where you want to install the LCD remote controller (switch box).
In deciding, please observe the following precautions:

Do not install the LCD remote controller in locations, which are:

- Exposed to direct sunlight.
- Susceptible to humidity and moisture.
- Near a source of heat.
- Near machines emitting high-frequency waves. (High-frequency welders, etc.)

1) Procure the following parts locally :
Switch box for two units
Connecting wire (Length : below 20m size : 0.3mm ~ 0.75mm)
Lock nut, bushing

(2) Install the lower case on the switch box.

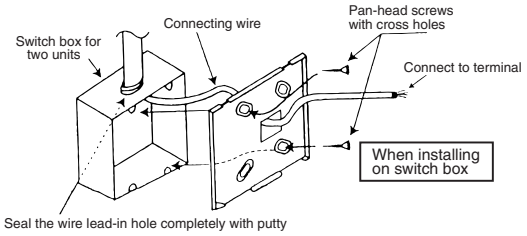


**Caution :**
- Over-tightening the screws can cause deformation and / or cracks on the lower case.
- Install the LCD remote controller on a wall with flat surface. Installation on an uneven surface can cause cracks on the LCD and other failure.

Snap the upper case into place.
Hook the two upper claws into their slots, and shut the lower part as shown in the right diagram.

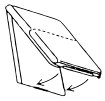

**Caution :**
- Press the case until it snaps shut.
- To use, remove the protective sheet on the operation section.

To remove the upper case, insert a screwdriver (-) into one of the slots and slide it in the direction of the arrow shown in the diagram on the right.

**Caution :**
- Do not turn the screwdriver while it is inserted into the slot.
- Doing so can result in damage to the slot.

(3)-3. Wiring

(1) Connect the wires on the basis of the following wiring diagram.

(2) Connecting work is different each models.

**Caution :**
- This controller is damaged if mistook the connection.

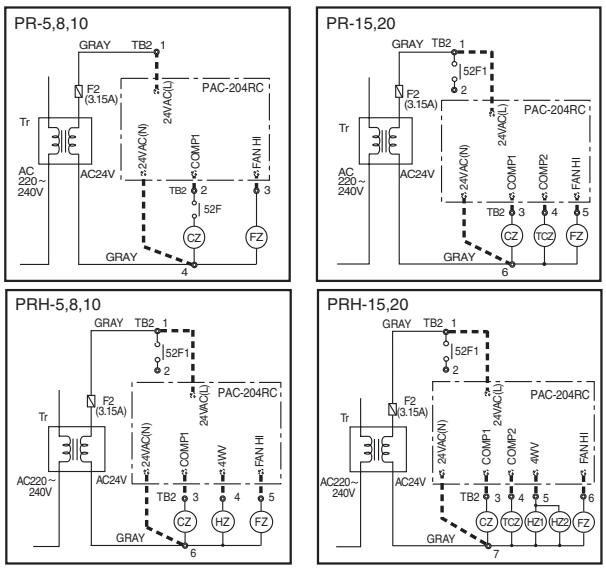

(3)-4. Setting DIP switch

Set the DIP switches on the basis of the below table.

| | | DIP Switch 1 | | DIP Switch 2 | | DIP Switch 3 | | DIP Switch 4 | |
|---|---|---|---|---|---|---|---|---|---|
| | | ON | OFF | ON | OFF | ON | OFF | ON | OFF |
| | Factory pre setting | | ○ | ○ | | | ○ | ○ | |
| | PR setting | | ○ (Not change) | ○ (Not change) | | | ○ (Not change) | ○ (Not change) | |
| | PRH setting | ○ (Change) | | ○ (Not change) | | | ○ (Not change) | ○ (Not change) | |
| FUNCTION | Mode select | Heat pump | Cooling only | | | | | | |
| FUNCTION | Fan speed Hi / Lo (*1) | | | Do not change DIP switch 2. | | | | | |
| FUNCTION | Auto change over function (*2) | | | | | Available | Not Available | | |
| FUNCTION | Auto start at Power failure (*3) | | | | | | | Not Available | Automatically |

Note: *1: This function can not use at above models, because the fan speed of these models is constant.
*2: If need this function, please consult your local MITSUBISHI ELECTRIC SALES office for application advice on this function.
*3: This function can change by customer self.
If this function use, The unit will auto start at power supply come back after power failure.

(3)-5. How to connect the external sensor (PAC-SE40TSA) to LCD remote controller.

This controller is set for using internal sensor.
If you need the external sensor, please consult your dealer and purchase option external sensor. (PAC-SE40TSA)
And please change below method.

1. Remove the cover of LCD remote controller.
2. Connect the wire of external sensor to terminal as below.
3. Replace the shunt jumper from “INT” side to “EXT” side as below.
4. Check above connection. (Refer to PAC-SE40TSA Installation manual.)
5. Attach the cover of LCD remote controller.

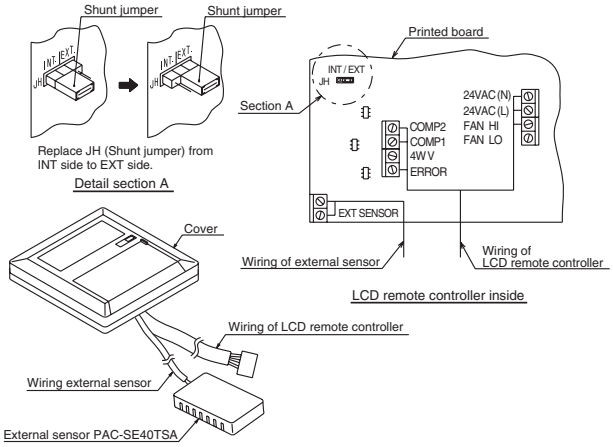


(4) Switch box (Field supply)

In case of using switch box (field supply), please wires as shown in the below.
Remove the panel on the right side (PR(H)-5,8,10) or the rear side (PR(H)-15,20) of the unit and connect the units power supply wiring to the proper terminals in the control box.
Connect the wires on the basis of the following wiring diagram.
If mistook the connection, the controller is damaged.

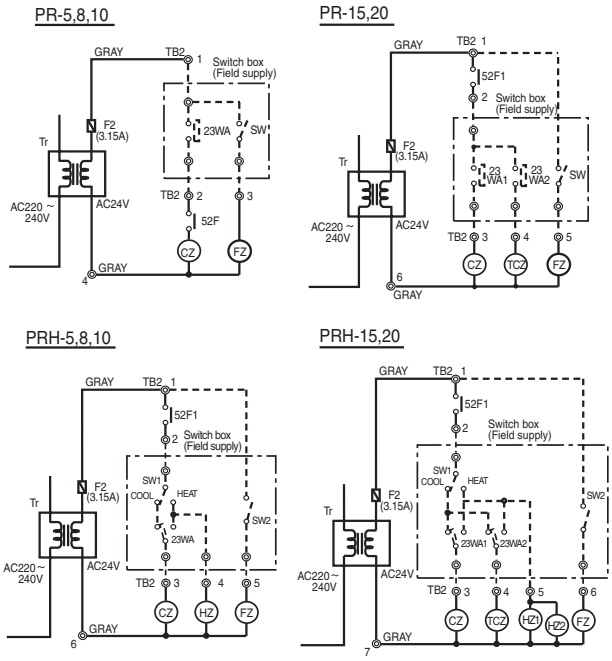


(5) Wiring example (For metal piping)

| | Power cable | Breaker capacity | Over current protection switch | Earth cable | Control cable |
|---|---|---|---|---|---|
| PR(H) - 5 | 5.5mm$^2$ | 40A | 40A | 5.5mm$^2$over | Cable or wire of 2.0mm (220/240 VDC) |
| PR(H) - 8 | 5.5mm$^2$ | 50A | 50A | 5.5mm$^2$over | |
| PR(H) - 10 | 8mm$^2$ | 60A | 60A | 8 mm$^2$over | |
| PR(H) - 15 | 22mm$^2$ | 100A | 100A | 22mm$^2$over | |
| PR(H) - 20 | 22mm$^2$ | 100A | 100A | 22mm$^2$over | |

The grounding wire must be of the same diameter as the power cable wires. Table above is an example.
The selection of other capacities should be determined in accordance with the relevant standards.

TN-NET SYSTEM (For European models only)

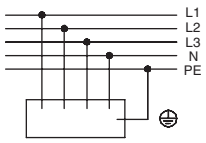

(6) Selecting earth leakage breaker (NV)

To select NF or NV instead of a combination of Class B fuse switch use the following.
In the case of Class B fuse rated 15A.

| | Fuse (class B) | Earth leakage breaker (with over-load protection) | | |
|---|---|---|---|---|
| PR(H) - 5 | 40A | NV30-CA | 40A | 30mA 0.1s or less |
| PR(H) - 8 | 50A | NV50-CA | 50A | 100mA 0.1s or less |
| PR(H) - 10 | 60A | NV60-CA | 60A | 100mA 0.1s or less |
| PR(H) - 15 | 100A | NV100-CP | 100A | 100mA 0.1s or less |
| PR(H) - 20 | 100A | NV100-CP | 100A | 100mA 0.1s or less |

NV is a product of MITSUBISHI ELECTRIC.
Table above is an example. The selection of other capacities should be determined in accordance with the relevant standards.

> Note:
> All electrical wiring must be comply with local electrical authority regulations.

# 8. The putting condition of the belt

(1) Set the parallel angle of the fan and the motor pulley as shown in the table and figure 1 below.
(2) Set the tension of the per one belt when the flexion load is within the range as shown in the figure 1 below at the proper flexion. (A=4.5mm)
(3) Adjust the suitable tension after the belt sit properly across the pulley (after more 24-28 hours working).
When the new belt is used, adjust the suitable tension about the 1.3 times of the maximum value of the flexion load.
(4) Readjust the belt every 2,000 hours after the first adjustment.
Exchange the belt when the belt's surroundings length has expanded by 2% including the first expansion of the belt. (about 1%)
(about 8,000 hours converted working time)

table

| pulley \ parallel angle | K (″) | note |
|---|---|---|
| pulley | 10 or less | gap of 3mm every 1m |

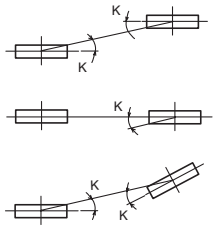


Figure 1 Parallel degree of pulley

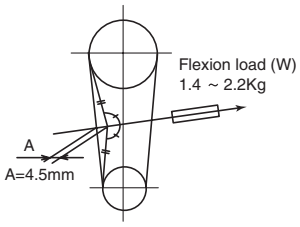


Figure 2 Belt tension

# 9. Before starting the trial run

After having installed the unit, check that:

(1) The unit is fixed securely.
(2) The unit is installed properly.
(3) The drain pipe is provided with a drain trap.
(4) The electrical wiring has been connected correctly and the terminal screws have been properly tightened.
(5) The duct work has been performed correctly.
(6) Before turning the unit on, measure the resistance between the terminals of the electrical parts and ground with a 500V megger and check that the value is at least 1.0M ohm.
If the measured value is below 1.0M ohm, do not operate the unit.
(7) Turn universal power supply at least 6 hours before getting test run in order to current to crank heater.
If current-carrying hours are too short, it may result in a malfunction of compressor.
(8) Check that the fans are rotating in the proper direction.
(9) Check to see whether there are refrigerant leakage, and slack power or transmission cable.
(10) Check the operation of high-pressure switch.
If the two lead wires of the outdoor unit fan motor are disconnected from the contactor and cooling is performed, the high-pressure switch should operate and stop the unit after 5 to 10 minutes.

Perform trial operation after completion above items.

# INSTRUCTIONS FOR USE

## 1. CHECK POINTS FOR OPERATION

**Check the following points before you operate your air conditioner.**

(1) Check that there is nothing blocking the flow of air from the air outlet into the air inlet.

### Indoor Unit

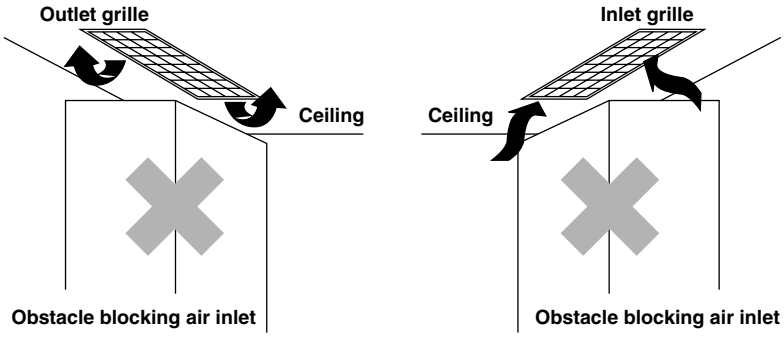


### Outdoor Unit

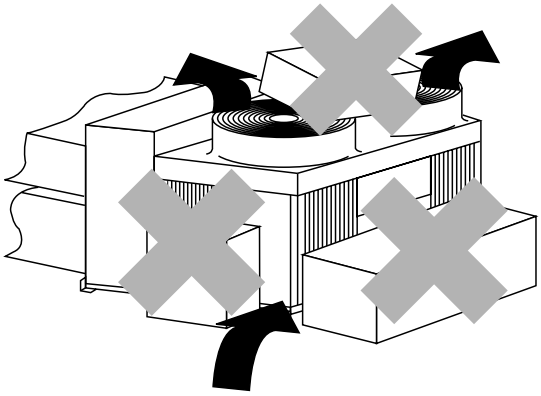

Obstacle blocking air inlet

(2) Make sure the air conditioner is properly grounded by checking the ground terminal.

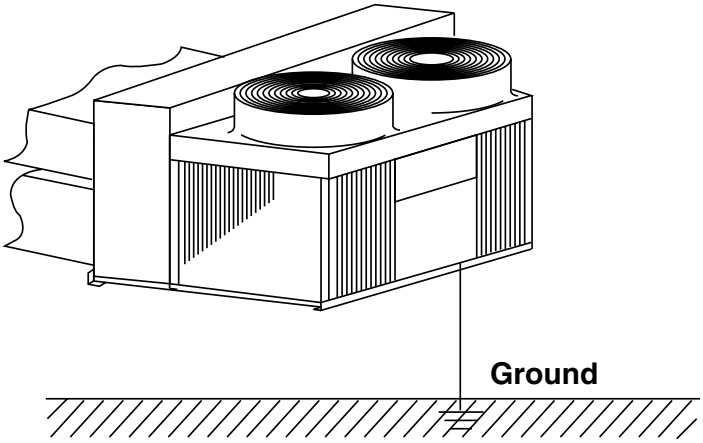

## 2. Caution before using

- For safety, confirm that the earth terminal has been connected to the earth wire correctly.
- Never block or cover the unit's intakes or outlets. It will reduce the unit's efficiency.
- To start the unit again after once stopped, be sure to turn the start switch on after 3 minutes elapsed.
  Repeating stopping and starting within 3 minutes gives improper force to the machine which can cause to trip the fuse or power source switch.
- Turn on the main power switch more than 6 hours before starting operation.
  Do not turn the main power switch OFF during seasons of heavy use, doing so can result in failure.

## 3. Sectional names and functions

PR-5
PR-8
PR-10
PRH-5
PRH-8
PRH-10

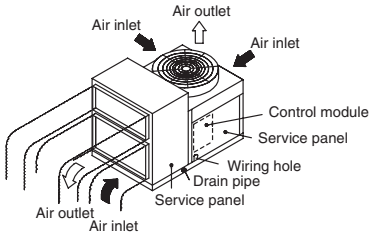


PR-15
PR-20
PRH-15
PRH-20

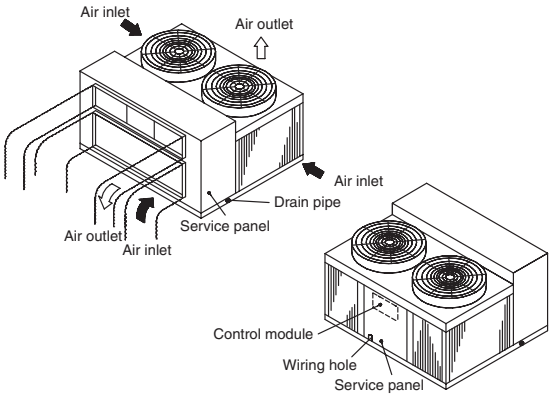


## 4. How to conduct maintenance service

For superior performance and lasting durability, please do not forget to conduct proper and regular maintenance.

**⚠ Warning**

1. Do not wash the unit with water.
   If washed with water, electrical shock may be caused.
2. Ahead of the maintenance.
   For safety, turn the power source off before service work.

### *4.1 Cleaning the Air Filter (Field supply)*

Clean the air filter about once a week with a neutral cleanser and leave it to dry in a shady location.
Clean more regularly if the air filter gets very dirty.
If the filter gets blocked, air will not be sucked in properly, and the cooling effect will deteriorate.
Failure to clean the air filter may result in equipment breakdown or malfunctions.

1. Removing the air filter.
   The air filter is mounted at the inlet. (in front of the air-return port.)
2. The air filter is cleaned with the cleaner or washed

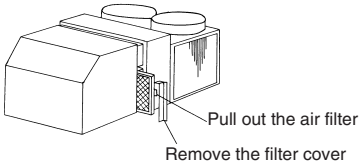


   in clear water.
   When the filter is dirty, please wash it with lukewarm water and some neutral detergent is recommended.
   Please do not use a hot water of 50°C or more.
   (It transforms occasionally.)
   It is necessary to avoid massage washing and squeeze strongly.
   It must rinse enough and the detergent must not remain.
3. When the filter is washed in clear water, it is often dried in the shade.
   Please do not dry it to direct sunshine and a direct fire.
4. The air filter is installed as before.

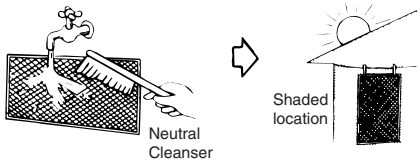


### *4.2 Cleaning of panel*

Clean dirt of panel as follows.
Use a household neutral cleanser such as for dishes or vegetables.
Moisten a soft cloth with the cleanser, then wipe lightly.
Next, wipe three or four times with another soft cloth moisten with water.
Finally, wipe off all the remaining cleanser with a soft cloth.
Moisten a soft cloth with the alcohol, then wipe off lightly.
Isopropyl alcohol is sold at stores as reagents in small quantities.

**Note:**
Alcohol is highly combustible.
Take extreme care when handling.
Also, do not use paint or adhesive thinner.

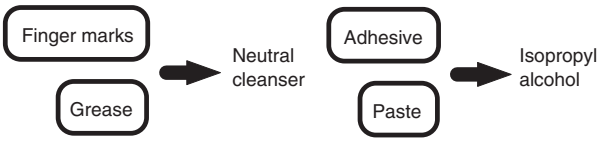


### *4.3 Cleaning the outdoor Heat Exchanger*

If you use your air conditioner for prolonged periods, the outdoor heat exchanger will become dirty, impairing its function and reducing air conditioners performance.
Consult your equipment supplier or air conditioning contractor on how to clean the heat exchanger.

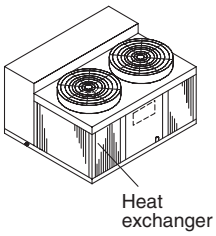


### *4.4 When beginning to use air conditioner again*

Please turn on the power supply after confirming an following check is done and abnormality is not found.
Please do the following work.

It is confirmed that air inlet and outlet are not blocked.
It is confirmed that the earth connection line does not come off.
The earth connection line is installed surely in the unit.
It is confirmed that there are neither lifting, blocking, no bending about the drain-hose.

1. It is confirmed to keep the controller OFF.
2. The power supply switch is turned on.

Keep the power switch ON for more than 6 hours before starting operation.
Do not turn the power supply OFF during seasons of heavy use, doing so can result in failure.

### *4.5 When the air conditioner is not to be used for long time*

If the air conditioner is not to be used for a long time due to a seasonal change, etc.
Please do the following work.

1. The power supply switch is turned off.
   If the power supply is kept on, several watts or several tends of watts will be wasted.
   Also, the accumulation of dust, etc., can result in fire.
2. Filter, eliminator and drain pan are cleaned.
   Pay attention to throw dust in the drain.
3. Run it for 4-5 hours with the air blowing until the inside is completely dry.
   Failing to do so can result the growth of unhygienic, unhealthy mold in scattered areas throughout the room.

### *4.6 In case of failure*

1. Never remodel the air conditioner.
   Consult your dealer for any repair service.
   Improper repair work can result in water leakage, electric shock, fire, etc.
2. If the poser breaker is frequently activated, get in touch with your dealer.
   Leaving the unit as it is under such conditions can result in fire or failure.
3. If the refrigeration gas blows out or leaks, stop the operation of the air conditioner.
4. Thoroughly ventilate the room, and contact your dealer.
   Leaving the unit as it is can result in accidents due to oxygen deficiency.

## 5. Transferring work and construction

### *5.1 Transfer of installation*

1. When removing and reinstalling the air conditioner when you enlarge your home, remodel, or move, consult with your dealer in advance to ascertain the cost of the professional engineering work required for transferring the installation.
2. Please do not mix the one other than a specified refrigerant when you add the refrigerant (R-22) at the installation and the transferring.
3. When moving or reinstalling the air conditioner, consult with your dealer.
   Defective installation can result in electric shock, fire, etc.

## 5.2 Place for installation

Please do not use the unit in the following places.

1. Place where a lot of oil (The machine oil is contained), moistures, and dust exist.
2. Place where a lot of salinities such as beach districts exists.
3. Place where sulfur gas, volatile gas, and corroded gas are filled.
4. Place where acid solution is frequently used.
5. Place where special spray is frequently used.
6. Hot spring zone.
7. Never machine (high cycle welding machine etc.) generating high cycle.
8. Place where ventilation entrance of unit is closed by snowfall.
9. The unit must be installed on stable, level surface.

The main body might corrode when the unit is used in such a place, the refrigerant leak, the performance of the unit decrease remarkably, and it cause the damage of parts of the unit.

## 5.3 Regarding electric work

1. The electrical work must be undertaken by a person who is qualified as an electric engineer according to the (technical standard respecting electrical installation), (internal wiring rules), the installation and operation manual with the absolute use of exclusive circuits. The range of working voltage is within ±10% voltage of power supply.
2. Please install a special power supply in the power supply.
3. Please install the earth connection for the electric shock prevention.
4. Never connect the grounding wire to a gas pipe, water pipe, arrester, or telephone grounding wires.
   For details, consult with your dealer.
5. In some types of installation sites, the installation of an earth leakage breaker is mandatory. For details, consult with your dealer.
6. The breaker and the fuse must use the one of correct capacity.

## 5.4 Consideration of the noise

1. Take sufficient measures against noise when installing the air conditioners at hospitals or communication-related businesses.
2. If the air conditioner is used in any of the above-mentioned environments, frequent operational failure can be excepted.
   It is advisable to avoid these type of installation sites.
   For further details, consult with your dealer.
3. Choose a place where cool or warm air and noise from the outdoor air outlet of the air conditioner do not inconvenience the neighbors.
4. If any obstruction is placed near the air outlet of the unit, decreased performance and increased noise can result.
   Do not place any obstruction near the air outlet.
5. If the air conditioner produces any abnormal sound, consult with your dealer.

## 5.5 Disposing of the unit

When you need to dispose of the unit, consult your dealer.
If pipes are removed incorrectly, refrigerant (fluorocarbon gas) may blow out and come into contact with your skin, causing injury.
Releasing refrigerant into the atmosphere also damages the environments.

## 5.6 Maintenance and inspection

1. If the air conditioner is used throughout several seasons, the insides can get dirty, reducing the performance.
2. Depending upon the conditions of usage, foul odours can be generated and drainage can deteriorate due to dust and dirt, etc.

# HOW TO OPERATE (LCD remote controller OPTION:PAC-204RC)

If you use the LCD remote controller, you can operate below method.
Please consult operate method with dealer, if you use field supply control parts.

Display section

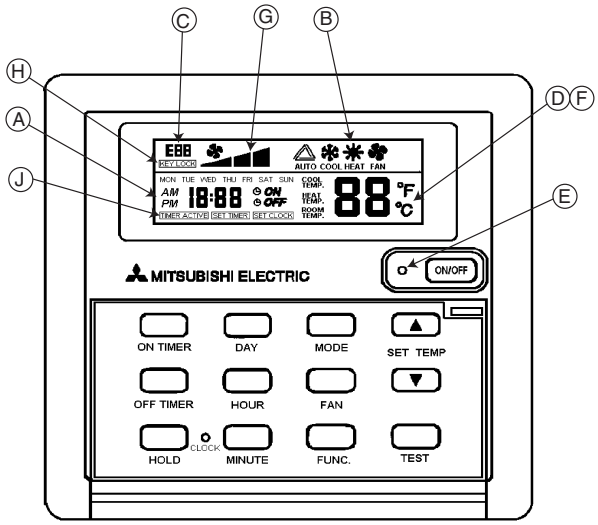


For purposes of explanation, all the displays on this page are shown in their lit condition. This configuration does not occur in the actual unit.

Before starting operation

* Make sure that the power supply is turned ON before use.
  (Keep the power supply turned ON at all times when the air conditioner is in use. Use of the unit without power can result in compressor failure.)

### ⚠ Warning:

Check and confirm the power circuit before use. For the contents, refer to the previously described chapter [Crucial points to be observed for safety].

Ⓐ [Current/start/ending time] Display

Ⓑ Operation mode
Displays the status of operation.

Ⓒ [Checking] Display
This displays indication when some abnormality occurs in the unit.

Ⓓ [Set temperature] Display
Displays the set temperature.

Ⓔ [Operation] Lamp
Lights up during operation, goes off during stop.

Ⓕ [Room temperature] Display
Displays the temperature of the air sucked in during operation.

Ⓖ [Fan] Display
This displays indication fan operation.

Ⓗ [Key lock] Display
This display indication during key lock function active.

Ⓙ [Timer Hold / Resume setting] Display

## 1. ON / OFF

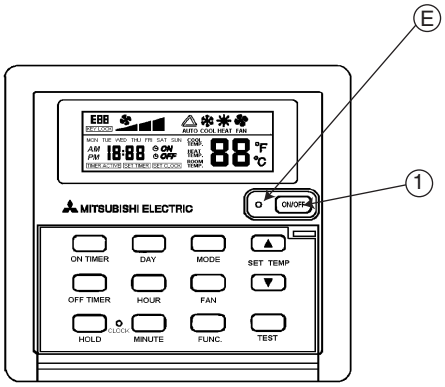


Ⓔ Operation lamp

Start operation
Press the [ON/OFF] button ①.
Operation lamp lights up and operation starts.

Stop operation
Press the [ON/OFF] button ① again.
Operation lamp goes off and operation stops.

* Once the buttons have been set, pressing of the [ON/OFF] button only can repeat the same operation thereafter.
* During operation, the operation lamp above the [ON/OFF] button lights up.

### ⚠ Caution:

Even if the operation button is pressed immediately after the operation is once stopped, operation is not restarted for about 3 minutes.
This function protects the machine. It automatically starts operation after the lapse of approximately 3 minutes.

## 2. Selecting operation

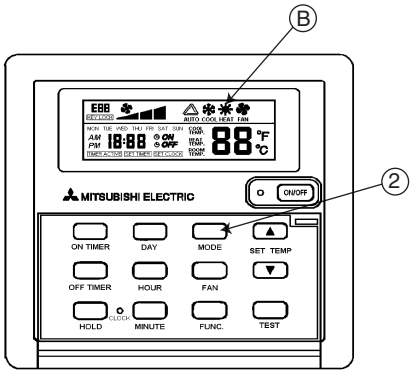


Ⓑ Operation mode display

When selecting operation
Press the [MODE] button ②.
Consecutive press of the [MODE] button switches the operation over to “FAN”, “COOL”, “HEAT” and “AUTO”.
For the contents of operation, check the display.

For fan
Press the [MODE] button ② and bring up the “FAN” display.
* The fan operation functions to circulate the air in the room.
* The temperature of the room cannot be set by fan operation.

### ⚠ Caution:
Never expose your body directly to cool air for a long time.
Excessive exposure to cool air is bad for your health, and should therefore be avoided.

For cooling
Press the [MODE] button ② and bring up the “COOL” display.

For heating
Press the [MODE] button ② and bring up the “HEAT” display.

### ⚠ Caution:
* When the air conditioner is used together with burners, thoroughly ventilate the area. Insufficient ventilation can result in accidents due to oxygen deficiency.
* Never place a burner at a place where it is exposed to the airflow from the air conditioner. Doing so can result in imperfect combustion of the burner.

For Auto change over*
Press the [MODE] button ② and bring up the “AUTO” display.
* This function is special order. Please consult your local Mitsubishi Electric Sales office for application advice on this function.
Because this function need low ambient cooling parts as option.
Indoor temperature can be set within the following range.

**Indoor temperature setting range : 17 ~ 30 °C**

## 3. Room temperature adjustment

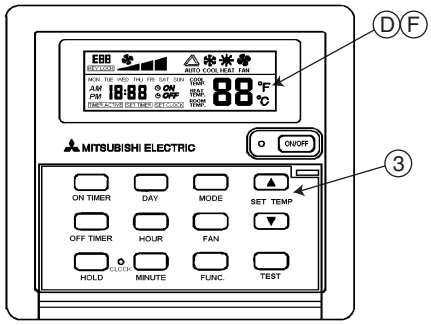


Ⓓ Set temperature display and Ⓕ room temperature display

To change room temperature
Press the [SET TEMP] button ③ and set the room temperature of your choice.
Press △ or ▽ button once changes the setting by 1 °C.
If the pressing is continued, the setting continues to change by 1 °C.
* Indoor temperature can be set within the following range.
  Cooling 19 ~ 30 °C
  Heating 17 ~ 28 °C
* It is impossible to set the room temperature by the air-blow operation.

Press △ and ▽ button together, the unit of temperature change “C” (degree-centigrade) and “F”. (degree-Fahrenheit)

# 4. Time setting

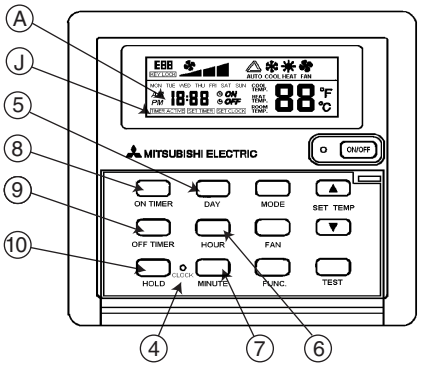


Ⓐ Current time display
Ⓙ Timer Hold/Resume display

Clock setting

Press the [CLOCK] key ④ one time will activate set clock mode.
Press the [CLOCK] key ④ again will disable set clock mode.
Under set clock mode, the real time clock and present day setting can be changed by pressing [DAY] button ⑤, [HOUR] button ⑥ or [MINUTE] button ⑦.

### ⚠ Caution:

[CLOCK] key ④ is not allowed to be pushed with the thing of sharp tip.

7-Days timer setting

There are two buttons for timer. One is [ON TIMER] ⑧, another is [OFF TIMER] ⑨ .
Press the button one time will activate set timer mode.
Press the same button again will disable set timer mode.
Under set timer mode, the 7-days timer setting can be changed by pressing [DAY] button ⑤, [HOUR] button ⑥ or [MINUTE] button ⑦.

Day setting

During set clock mode or set timer mode, press the [DAY] button ⑤ will change the day setting.

Hour setting

During set clock mode or set timer mode, press the [HOUR] button ⑥ will change the hour setting.

Minute setting

During set clock mode or set timer mode, press the [MINUTE] button ⑦ will change the minute setting.

Timer Hold / Resume setting

If 7-days timer is set, then the word “Timer Active” is displaye.
To clear all the timers setting, press and hold the [HOLD] button ⑩ until the word “Timer Active” is not displayed Ⓙ.
To resume the timer setting after timers have been held, press and hold the [HOLD] button ⑩ until the word “Timer Active” is displayed.

# 5. Other function

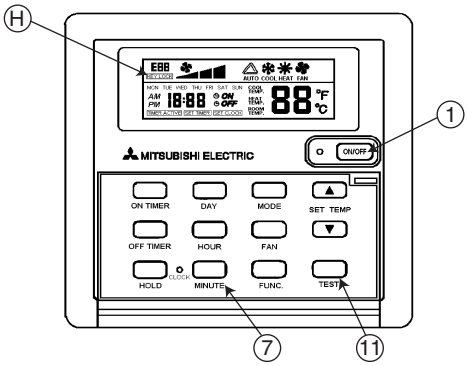


Key lock

Press the [MINUTE] button ⑦ three times consecutively, the word “KEY LOCK” will displayed Ⓗ.
At this time, only [ON-OFF] button ① is valid.
This function purpose is protect from mischief of child etc.

To cancel the key lock function, Please press [MINUTE] button ⑦ three times consecutively again.

Test run

Press the [TEST] button ⑪ two times consecutively.
The unit will run and finished automatically after two hours.

# 6. Troubleshooting

Before you ask for repair service, check the following points:

| State of Machine | LCD remote controller | Cause | Troubleshooting |
|---|---|---|---|
| It does not run. | "ON-OFF "display is not lit up.<br>No display appears even when the [ON/OFF] button is pressed. | Power failure. | Press the [ON/OFF] button after power restoration. |
| | | The power supply is turned OFF. | Turn the power supply ON. |
| | | The fuse in the power supply is gone. | Replace fuse. |
| | | The earth leakage breaker is gone. | Put in the earth leakage breaker. |
| | | The wiring phase of power supply is mistaken. | Modify the wiring phase of power supply. |
| Air flows out but it does not cool or heat enough. | The liquid crystal display shows that it is in the state of operation. | Improper temperature adjustment. | After checking the set temperature and inlet temperature on the liquid crystal display, refer to [To change room temperature] on page 6, and operate the adjustment button. |
| | | The filter is filled with dust and dirt. | Clean up the filter. |
| | | There are some obstacles at the air inlet and outlet of the units. | Remove. |
| | | Windows and doors are open. | Close. |
| | | Insufficient refrigerant charge. | Contact with your installing contractor. |
| Cool or warm air does not come out. | The liquid crystal display shows that it is in operation. | The restart-preventing circuit is in operation for 3 minutes. | Wait for a while.<br>(To protect the compressor, a 3-minute restart-preventing circuit is built into the unit.<br>Therefore, there are occasions sometimes when the compressor does not start running immediately.<br>There are cases when it does not run for as long as 3 minutes.) |
| Can not change to Heat mode.<br>(PRH only) | Can not change to Heat mode when press the "MODE" key. | DIP switch 1 is not correct. | Change the DIP switch off to on.<br>(Refer to Instruction manual for Installation.) |
| On heating, cool air comes out. (PRH only) | | Indoor unit operation shift to defrost. | Wait for a while.<br>(Heating operation starts after ending defrosting operation.) |
| Fan runs but compressor do not run. | | The set temperature of thermostat is excessively high for cooling.<br>excessively low for heating. (PRH only) | For temperature control,<br>decrease the set temperature at cooling.<br>increase the set temperature at heating. (PRH only) |
| | | The room temperature is excessively low for cooling.<br>excessively high for heating. (PRH only) | Can not be operated as it is out of temperature control range. |
| Fan runs but stops immediately. | | Air outlet and inlet are blocked. | Remove blocking matter. |
| Water or steam is discharged from the unit. | | At cooling, water which places to cooling piping and piping connection part drops.<br>When heating, water which places to the heat exchanger drops. (PRH only) | It is not a breakdown.<br>Please contact and consult your dealer. |
| | | The drain pipe is clogged due to dust, therefore the drain water overflow. | |
| On heating, the air flow stops although a set temperature is not reached. (PRH only) | | Frost adheres to the outdoor coil when the temperature on the outside is low and humidity is high. This frost is melted. | It is not a breakdown.<br>Please use as it is. |

LCD remote controller error display (Special order)

| Indicate | Cause | Troubleshooting |
|---|---|---|
| E01 | Room temperature sensor open. | Automatically reset to restoration error. |
| E02 | Room temperature sensor short. | Automatically reset to restoration error. |
| E03 | Error input from Indoor unit or Outdoor unit. | Push the On-Off switch. (OFF to ON) |

# SPECIFICATION GUIDELINES

Please supply and install a one piece, air to air reverse cycle air conditioning system.

The system shall be completely assembled, tested and have a complete refrigeration charge ready for installation and operation from the factory.

The system shall operate at outdoor ambient temperatures as high as 46˚C.

The system shall have a total cooling capacity of _____kW or greater with an indoor air quantity of _____L/s at _____˚C db and _____˚C wb entering indoor coil temperature with a _____˚C temperature entering the outdoor coil.

The system shall have a sensible heat capacity of _____kW or greater with a room db temperature of _____˚C.

The total heating capacity (without electric element heaters) shall be _____kW or greater at _____˚C db, _____˚C wb outdoor air conditions, with _____˚C of indoor air entering indoor coil at _____˚C db. One _____ kW electric heater element (accessory) shall be furnished.

The compressors shall be a welded high efficiency hermetic type with internal vibration isolation and be equipped with a crankcase heater.

Compressors shall be protected by a factory installed anti-cycle device and provide a 3 minute delay before compressor can restart.

Coils shall be of non-ferrous construction with mechanically bonded aluminium plate fins. Outdoor coils shall be made, of 9.52mm OD, 0.35mm thick seamless copper tubes mechanically bonded to 0.12mm thick aluminium plate fins.

Coils with multiple stage refrigeration systems shall consist of independent circuits. Face area of the coil shall not be less than _____ $M^2$. The coil shall be factory pressure and leak tested at 3,233 kPa pressure. The indoor coil face area shall be not less than _____ $M^2$.

Multi-wing propeller type fans shall be fitted at the condenser and shall be dynamically balanced, to ensure smooth airflow and shall discharge vertically and be direct driven by a weatherproof three phase squirrel cage _____kW induction motor.

The system shall be factory wired and all electrical wiring must comply with the Local wiring code. (Controls and control wiring shall be supplied by the contractor.) Compressors and fan motors shall have both internal and current sensitive overload devices.

An automatic defrost control shall be included to accomplish defrosting (only if required) every _____minutes for a period of _____minutes.

A low voltage transformer (24V) shall be factory installed in the unit for an external control circuit.

High pressure switch (pre-set) shall be factory installed.

The enclosure shall be a single, enclosed, weatherproof casing constructed of phosphatised, zinc coated steel with acrylic resin primer and ivory white baked enamel finish.

The unit shall be provided with hoisting plates for rigging and hoisting the unit. The hoisting plates shall be located in the base of the unit.

The unit shall have a 25mm OD male drain connection provided. The drain pipe shall be accessible from either the left or right side of the unit. A blanking cap shall be provided to cap the drain outlet not being used.

The duct (field supply) shall be fully insulated with fiber glass insulation to prevent sweating and to minimize sound.

Each unit shall have a drain pan of 1mm thick steel coated with epoxy resin enamel.

The enclosure shall have openings provided for power connections. Access for both service and installation shall be provided to compressors, control wiring, filters, electric heaters (when fitted) and fans.

Side panels and top panels shall be removable for easy service access.

The unit maximum dimensions shall be : height: _____mm, width: _____mm and depth: _____mm.

Due to continuous product development, these guidelines are subject to change.

# MEMO

# DATA BOOK PR, PRH

MITSUBISHI ELECTRIC CORPORATION
HEAD OFFICE DENKI BLDG., MARUNOUCHI,TOKYO 100,TELEX J24532 CABLE MELCO TOKYO

Issuued in September 2001 MEE01K075
Printed in Japan.

New publication effective Sep. 2001.
Specifications subject to change without notice.