MITSUBISHI ELECTRIC

FLOW TEMP. CONTROLLER (Cased)
PAC-IF021B-E

INSTALLATION MANUAL

FOR INSTALLER

For safe and correct use, read this manual thoroughly before installing the FTC unit.

English

OPERATION MANUAL

FOR USER

For safe and correct use, read this operation manual thoroughly before operating the air-conditioner unit.

Contents

"FTC" is the abbreviation of "Flow Temperature Controller", which is described as "FTC" in this manual.

1.Safety precautions

- **Before installing the FTC unit, make sure you read all the "Safety precautions".**
- **Please report to your supply authority or obtain their consent before connecting this equipment to the power supply system.**

⚠ **Warning:**
Precautions that must be observed to prevent injuries or death.

⚠ **Caution:**
Precautions that must be observed to prevent damages to the unit.

After installation, perform the test run to ensure normal operation. Then explain your customer the "Safety Precautions," use, and maintenance of the unit based on the information in the Operation Manual provided by local application manufacture. Both the Installation Manual and the Operation Manual must be given to the user. These manuals must always be kept by the actual users.
⏚ :Indicates a part which must be grounded.

⚠ **Warning:**
Carefully read the labels attached to the unit.

⚠ **Warning:**
- **The unit must not be installed by the user. Ask an installer or an authorized technician to install the unit. If the unit is installed improperly, electric shock, or fire may be caused.**
- **For installation work, follow the instructions in the Installation Manual and use tools and pipe components specifically made for use with refrigerant specified in the outdoor unit installation manual.**
- **The unit must be installed according to the instructions in order to minimize the risk of damages by earthquakes, typhoons, or strong winds. Improperly installed unit may fall down and cause damages or injuries.**
- **The unit must be securely installed on a structure that can sustain its weight. If the unit is mounted on an unstable structure, it may fall down and cause damages or injuries.**
- **All electric work must be performed by a qualified technician according to local regulations and the instructions given in this manual. The unit must be powered by dedicated power lines and the correct voltage and circuit breakers must be used. Power lines with insufficient capacity or incorrect electrical work may result in electric shock or fire.**
- **Only the specified cables can be used for wiring. Connections must be made securely without tension on the terminals. If cables are connected or installed improperly, It may result in overheating or fire.**
- **Terminal block cover panel of the unit must be firmly fixed. If the cover panel is mounted improperly, dust and moisture may enter the unit, and it may cause electric shock or fire.**
- **Make sure to use accessories authorized by Mitsubishi Electric and ask an installer or an authorized technician to install them. If accessories are improperly installed, it may cause electric shock, or fire.**
- **Do not remodel the unit. Consult an installer for repairs. If alterations or repairs are not performed correctly, it may cause electric shock or fire.**
- **The user should never attempt to repair the unit or transfer it to another location. If the unit is installed improperly, it may cause electric shock or fire. If the FTC unit needs to be repaired or moved, ask an installer or an authorized technician.**

1.1. Before installation (Environment)

⚠ **Caution:**
- **Do not install the FTC unit in outdoor location as it is designed for indoor installation only. Otherwise electric shock or breakdown may be caused by water drop, wind or dust.**
- **Do not use the unit in an unusual environment. If the FTC unit is installed or exposed to steam, volatile oil (including machine oil), or sulfuric gas, or exposed to briny air, the internal parts can be damaged.**
- **Do not install the unit where combustible gases may leak, be produced, flow, or accumulate. If combustible gas accumulates around the unit, it may cause fire or explosion.**
- **When installing the unit in a hospital or in a building where communications equipment are installed, you may need to take measure to noise and electronic interference. Inverters, home appliances, high-frequency medical equipment, and radio communications equipment can cause the FTC unit to malfunction or to breakdown. At the same time, the noise and electric interference from the FTC unit may disturb the proper operation of medical equipment, and communications equipment.**

1.2. Before installation or relocation

⚠ **Caution:**
- **Be fully careful when moving the units. Do not hold the packaging bands. Wear protective gloves to unpack and to move it, in order to avoid your hands be injured by parts.**
- **Be sure to safely dispose of the packaging materials. Packaging materials, such as nails and other metal or wooden parts may cause injuries.**
- **Do not wash the FTC unit. You may receive an electric shock.**

1.3. Before electric work

⚠ **Caution:**
- **Be sure to install a circuit breaker. If it is not installed, there may be a risk to get an electric shock.**
- **For the power lines, use standard cables of sufficient capacity. Otherwise, it may cause a short circuit, overheating, or fire.**
- **When installing the power lines, do not apply tension to the cables. The cables may be cut or overheated resulting in a fire.**
- **Make sure to ground the unit. Do not connect the ground wire to gas or water pipes, lightning rods, or telephone grounding lines. If the unit is not properly grounded, there may be a risk to get an electric shock.**
- **Make sure to use circuit breakers (ground fault interrupter, isolating switch (+B fuse), and molded case circuit breaker) with the specified capacity. If the circuit breaker capacity is larger than the specified capacity, breakdown or fire may result.**

1.4. Before starting the test run

⚠ **Caution:**
- **Turn on the main power switch of the outdoor unit more than 12 hours before starting operation. Starting operation immediately after turning on the power switch can severely damage the internal parts. Keep the main power switch turned on during the operation period.**
- **Before starting operation, check that all protective parts are correctly installed. Make sure not to get injured by touching high voltage parts.**
- **Do not touch any switch with wet hands. There may be a risk to get an electric shock.**
- **After stopping operation, make sure to wait at least 5 minutes before turning off the main power. Otherwise, it may cause breakdown.**

2. Installing the FTC unit

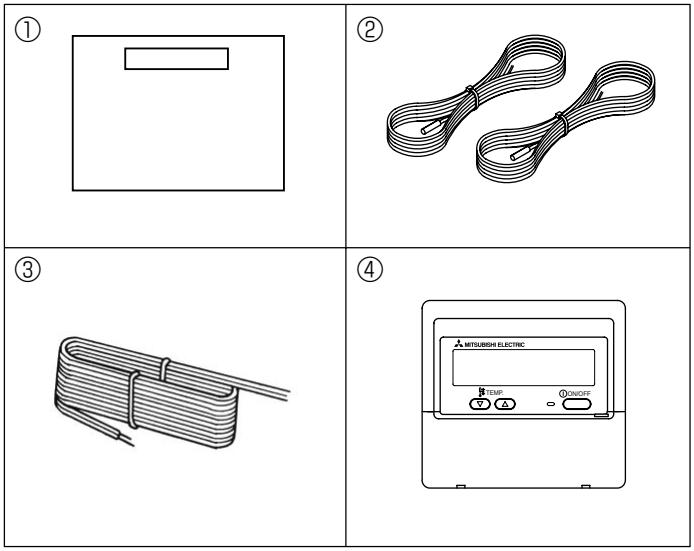

Fig. 2-1

2.1. Check the parts (Fig. 2-1)

The FTC unit should be supplied with the following parts.

	Part Name	Q'ty
①	FTC unit	1
②	Thermistor	2
③	Remote controller cable(5m)	1
④	Remote controller	1

2.2. Choosing the FTC unit installation location

- Do not install the FTC unit in outdoor location as it is designed for indoor installation only. (It is not waterproof against raindrop.)
- Avoid locations where the unit is exposed to direct sunlight or other sources of heat.
- Select a location where easy wiring access to the power source is available.
- Avoid locations where combustible gases may leak, be produced, flow, or accumulate.
- Select a level location that can bear the weight and vibration of the unit.
- Avoid locations where the unit is exposed to oil, steam, or sulfuric gas.
- Do not install in location that is hot or humid for long periods of time.

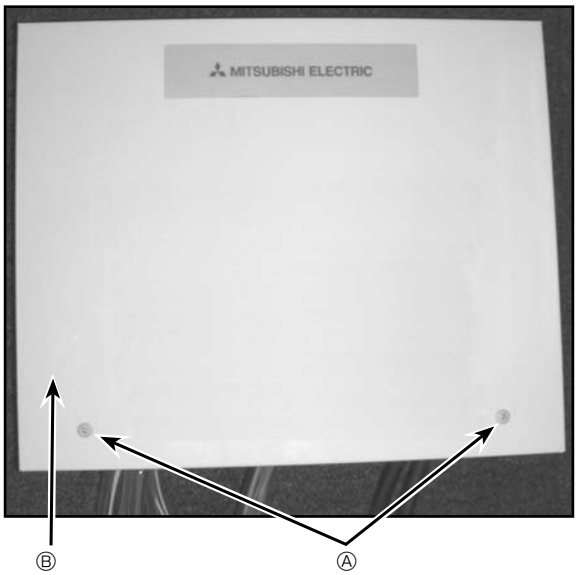

Photo.2-1

2.3. Installing the FTC unit (Fig. 2-2, Photo.2-1)

1. Remove 2 screws from FTC unit and remove the cover.
2. Install the 4 screws (locally supplied) in 4 holes.
   Ⓐ Screw Ⓑ Cover
   Ⓒ Hole for installation

Unit:mm

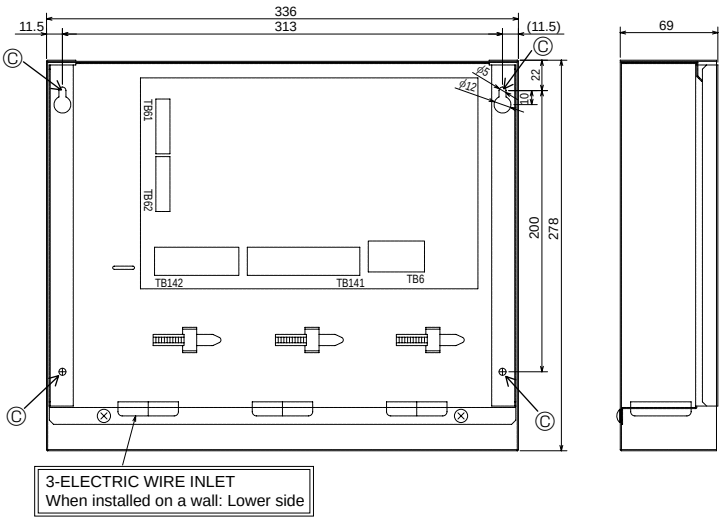

Fig.2-2

3. System

To start, check your system type by following the flow chart below.(FTC can be used for 3 types of systems.)

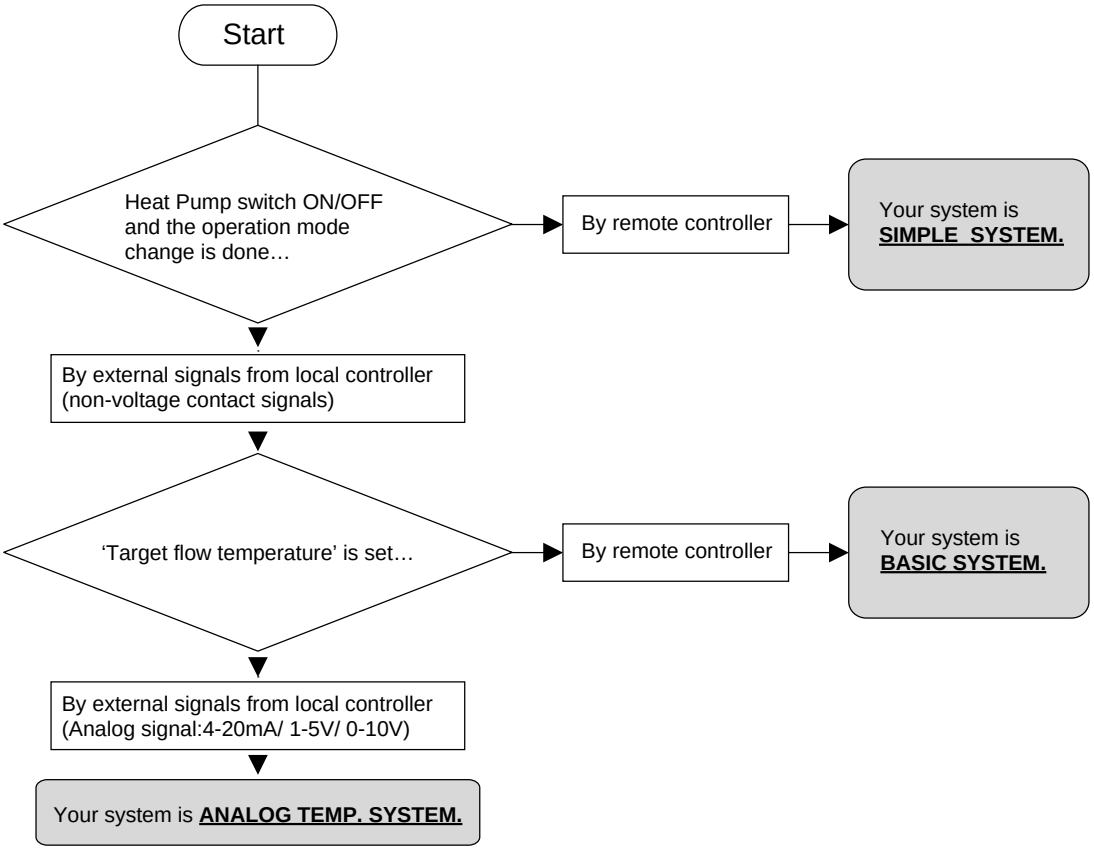

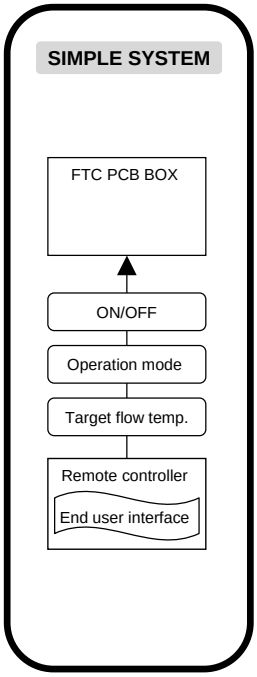

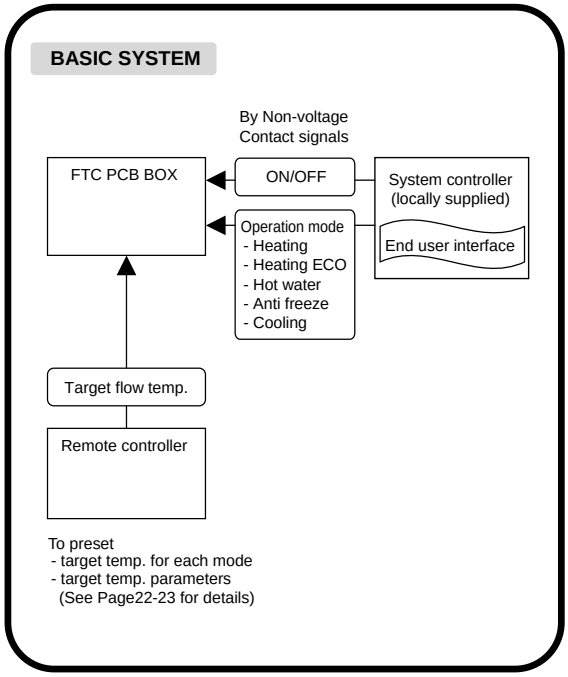

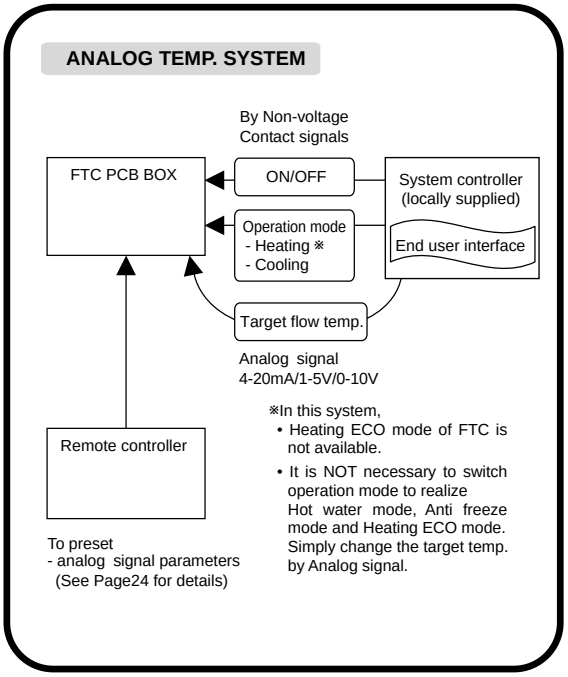

3. System

Refer to the relevant sections for details according to your system type.

System	Outdoor unit	System diagram	Power supplies	Thermistor (TH1, TH2)	Switch setting	External input	External output
BASIC	SPLIT type	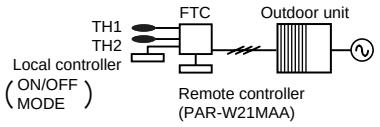	4.1 4.1.1	4.2.1 4.2.2	4.4	4.5.1	4.6
		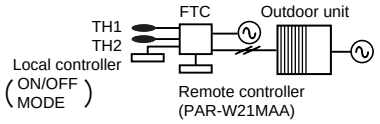	4.1 4.1.2	4.2.1 4.2.2	4.4	4.5.1	4.6
	PACKAGED type	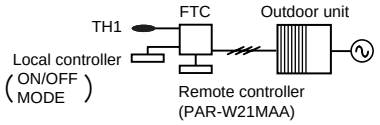	4.1 4.1.1	4.2.1	4.4	4.5.1	4.6
		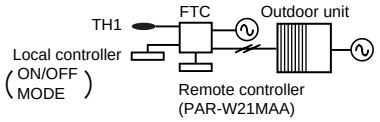	4.1 4.1.2	4.2.1	4.4	4.5.1	4.6
ANALOG TEMP.	SPLIT type	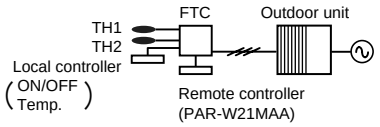	4.1 4.1.1	4.2.1 4.2.2	4.4	4.5.1 4.5.2	4.6
		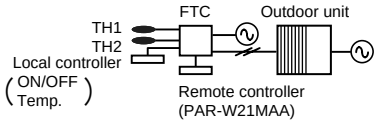	4.1 4.1.2	4.2.1 4.2.2	4.4	4.5.1 4.5.2	4.6
	PACKAGED type	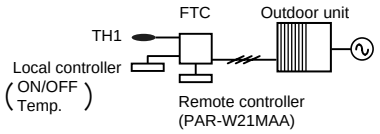	4.1 4.1.1	4.2.1	4.4	4.5.1 4.5.2	4.6
		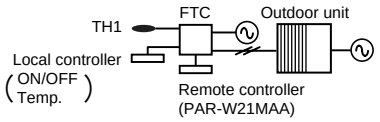	4.1 4.1.2	4.2.1	4.4	4.5.1 4.5.2	4.6
SIMPLE	SPLIT type	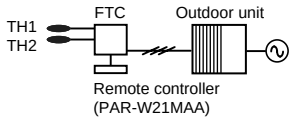	4.1 4.1.1	4.2.1 4.2.2	4.4	—	4.6
		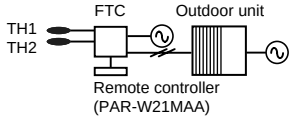	4.1 4.1.2	4.2.1 4.2.2	4.4	—	4.6
	PACKAGED type	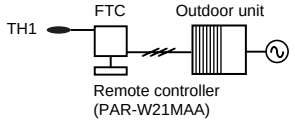	4.1 4.1.1	4.2.1	4.4	—	4.6
		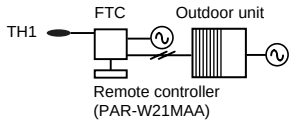	4.1 4.1.2	4.2.1	4.4	—	4.6

SPLIT type : the standard outdoor unit without a plate HEX(Refrigetant-water HEX) inside
PACKAGED type : the Air to Water outdoor unit with a plate HEX(Refrigetant-water HEX) inside

4. Electrical work

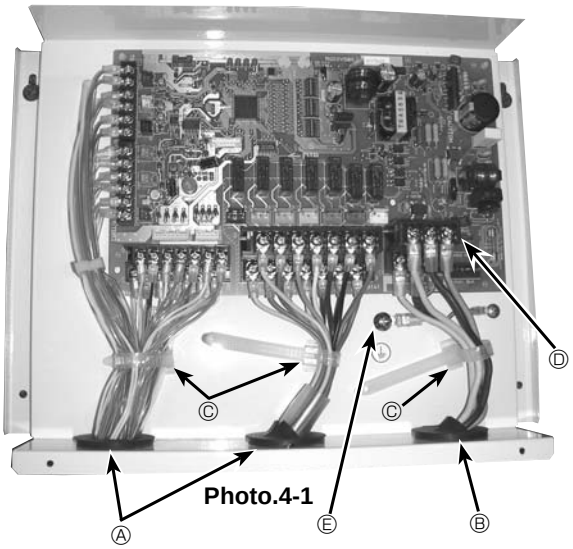

Photo.4-1

4.1. FTC (Photo. 4-1)

1. Remove the cover.
2. Wire the power cable and control cable separately through the respective wiring inlets given in the photo.

• Make sure to put screws tightly.

Ⓐ Inlet for control cable
Ⓑ Inlet for power
Ⓒ Clamp
Ⓓ FTC / Outdoor unit connecting terminals
Ⓔ Earth terminal

4.1.1. FTC unit power supplied from outdoor unit

The following connection patterns are available.
The outdoor unit must be powered properly.(Details are shown in its installation manual.)

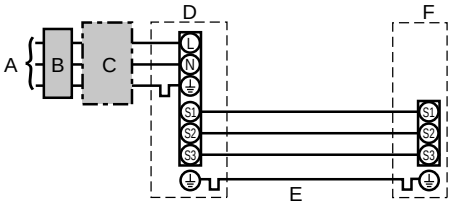

A Outdoor unit power supply
B Earth leakage breaker
C Wiring circuit breaker or isolating switch
D Outdoor unit
E FTC unit/outdoor unit connecting cables
F FTC unit

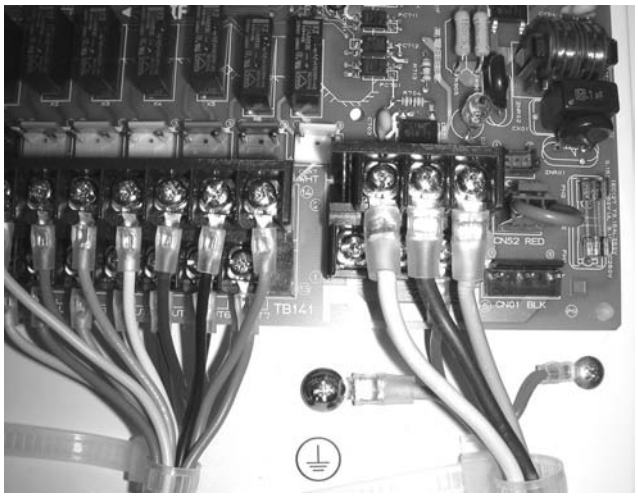

Photo.4-2

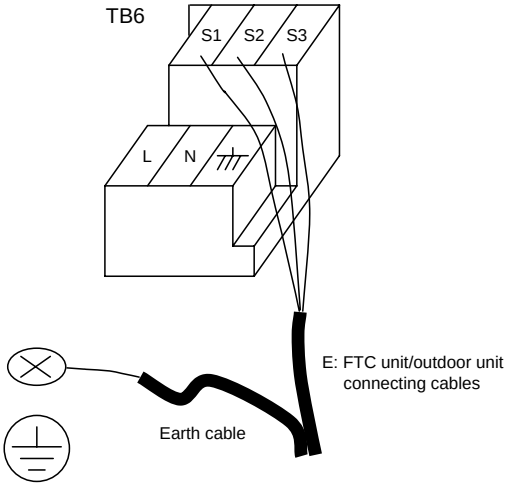

FTC unit model			PAC-IF021B-E
Wiring Wire No. × size (mm²)	FTC unit-Outdoor unit	*1	3× 1.5 (polar)
	FTC unit-Outdoor unit earth	*1	1 × Min.1.5
Circuit rating	FTC unit-Outdoor unit S1-S2	*2	AC 230 V
	FTC unit-Outdoor unit S2-S3	*2	DC24 V

*1. Max. 80 m
*2. The figures are NOT always against the ground.
S3 terminal has DC 24 V against S2 terminal. However between S3 and S1, these terminals are not electrically insulated by the transformer or other device.

Notes: 1. Wiring size must comply with the applicable local and national codes.
2. Power supply cables and FTC unit/outdoor unit connecting cables shall not be lighter than polychloroprene sheathed flexible cable. (Design 60245 IEC 57)
3. Install an earth wire longer than other cables.

4.1.2. Separate FTC unit/outdoor unit power supplies

The following connection patterns are available.
The outdoor unit power must be powered properly(Details are shown in its installation manual).

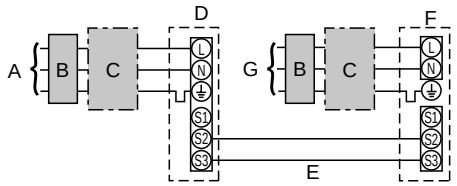

A Outdoor unit power supply
B Earth leakage breaker
C Wiring circuit breaker or isolating switch
D Outdoor unit
E FTC unit/outdoor unit connecting cables
F FTC unit
G FTC unit power supply

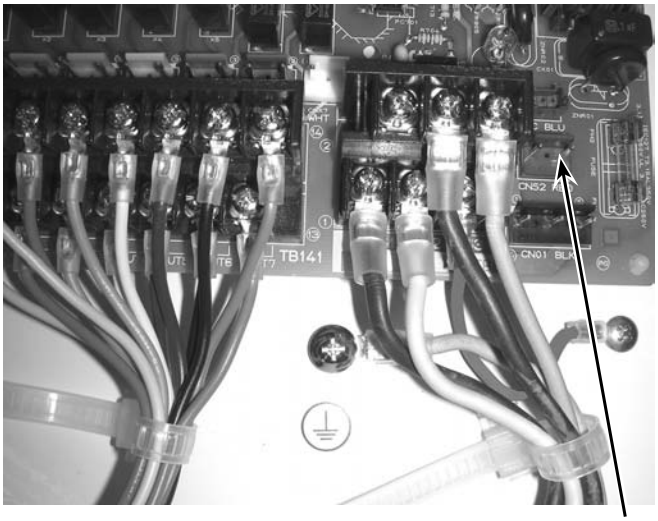

Photo.4-3

If the FTC and outdoor units have separate power supplies, refer to the table below.

	Separate power supply specifications
FTC unit controller connector (CNS2) connection change	Disconnected
Outdoor unit DIP switch settings (when using separate FTC unit/outdoor unit power supplies only)	ON: 3 OFF: 1, 2 (SW8) Set the SW8-3 to ON.

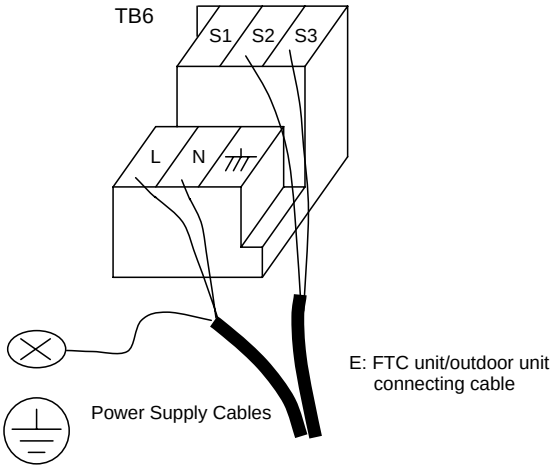

FTC unit model			PAC-IF021B-E
FTC unit power supply			~/N (Single Phase), 50 Hz, 230 V
FTC unit input capacity Main switch (Breaker)		*1	16 A
Wiring Wire No. × size (mm²)	FTC unit power supply & earth		3 × Min. 1.5
	FTC unit-Outdoor unit	*2	2 × Min. 0.3
	FTC unit-Outdoor unit earth		–
Circuit rating	FTC unit L-N	*3	AC 230 V
	FTC unit-Outdoor unit S1-S2	*3	–
	FTC unit-Outdoor unit S2-S3	*3	DC24 V

*1. A breaker with at least 3.0mm contact separation in each pole shall be provided. Use earth leakage breaker (NV).
*2. Max. 120 m
*3. The figures are NOT always against the ground.

Notes: 1. Wiring size must comply with the applicable local and national code.
2. Power supply cables and FTC unit/outdoor unit connecting cables shall not be lighter than polychloroprene sheathed flexible cable. (Design 60245 IEC 57)
3. Install an earth wire longer than other cables.

4.2. Connecting thermistor cable

Connect the thermistor ② for the FTC controller.

4.2.1. Connecting the actual flow water temp. thermistor (TH1)

Connect the thermistor for the actual flow water temp. to 1 and 2 on the terminal block (TB61) on the FTC controller.

When the thermistor cables are too long, cut them at the appropriate length.
Do not bind them in the FTC unit.

<Thermistor position>
Put TH1 on **water** piping (water **outlet** side).
Note: Be sure to attach the TH1 where it detects Flow temp.(Water oulet side) correctly.

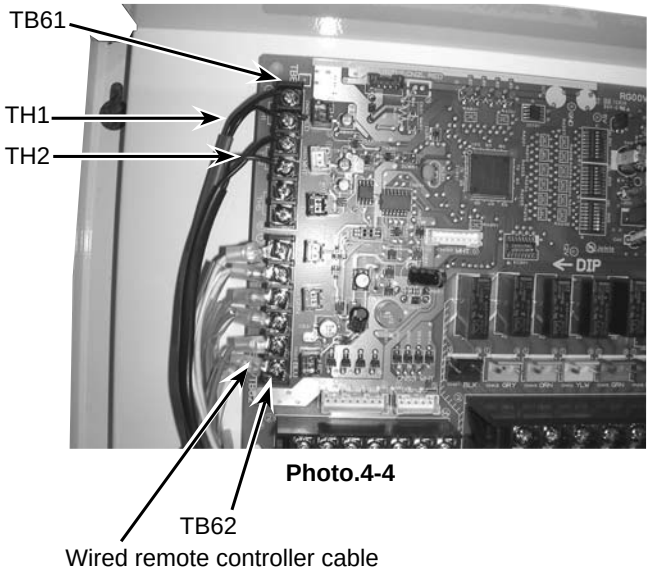

Photo.4-4

4.2.2. Connecting the pipe temp. thermistor (TH2)

Connect the thermistor for the refrigerant pipe temp. to 3 and 4 on the terminal block (TB61) on the FTC (PCB).

For packaged Outdoor unit : It is not necessary to connect TH2.
For split Outdoor unit : Connect TH2.

When the thermistor cables supplied with FTC are too long, cut them to the appropriate length.
Do not bind them in the FTC unit.

<Thermistor position>
Put the TH2 on **refrigerant** piping (**Liquid** side).
It is better to protect the thermistor with heat insulating materials not to be affected by the ambient temperature.
Note: Be sure to attach the TH2 where it detects Refrigerant piping temp. (Liquid side) correctly.

Caution:
Do not route the thermistor cables together with power cables.
The sensor part of the thermistor should be installed where user must not touch.
(It is separated by the supplementary insulation from where user may touch.)

<Thermistor position and necessity>

Outdoor unit	TH1	TH2	TH5
PACKAGED type	O	X	X
SPLIT type	O	O	X

O: Necessary. Connect the thermistor.

X: Not necessary. The thermistor is not needed to connect.

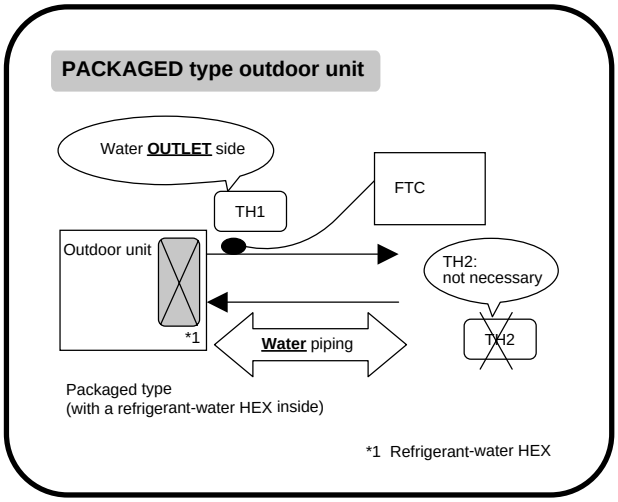

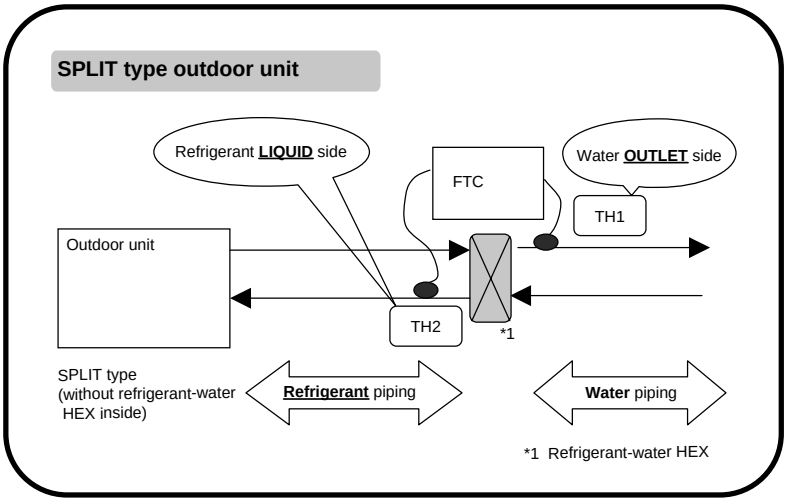

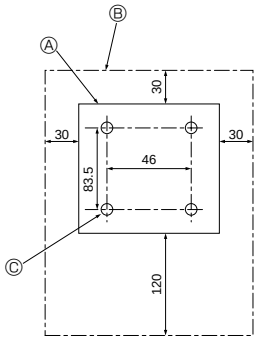

Fig. 4-1

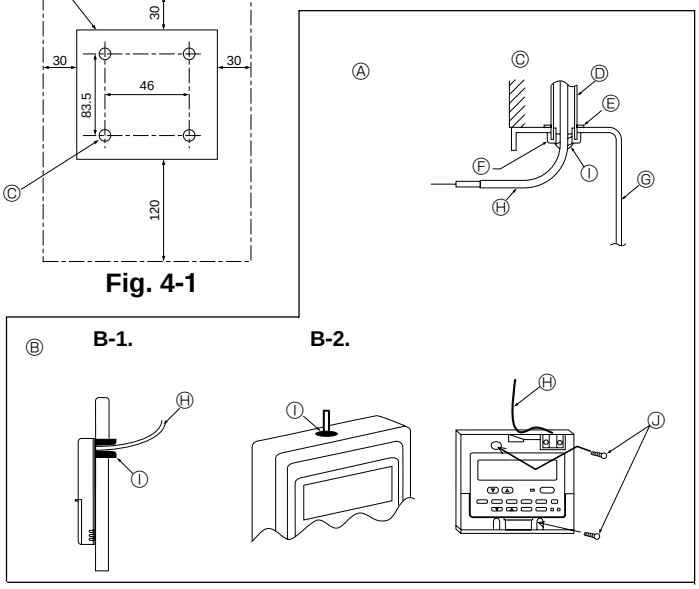

Fig. 4-2

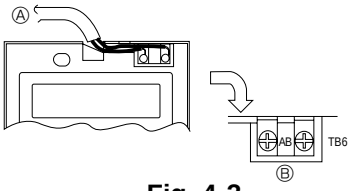

Fig. 4-3

4.3. Connecting the wired remote controller

4.3.1. Connecting the wired remote controller cable to FTC

Connect the wired remote controller cable to 5 and 6 on the terminal block (TB62) on the FTC controller.(Photo. 4-4)

Wiring wire No.×size(mm^2) : 2×0.3(Non-polar)

The 5m wire is attached as an accessory. Max. 500 m

Wiring size must comply with the applicable local and national codes.

Circuit rating: DC12V

Circuit rating is NOT always against the ground.

4.3.2. For wired remote controller

1) Installing procedures

(1) Select an installing position for the remote controller. (Fig. 4-1)

► **Procure the following parts locally:**

2 piece switch box
Thin copper conduit tube
Lock nuts and bushings

[Fig.4-1]

Ⓐ Remote controller profile
Ⓑ Required clearances surrounding the remote controller
Ⓒ Installation pitch

(2) Seal the service entrance for the remote controller cable with putty to prevent possible invasion of dew drops, water, cockroaches or insects. (Fig. 4-2)

Ⓐ For installation in the switch box

Ⓑ For direct installation on the wall, select one of the followings:

- Prepare a hole through the wall to pass the remote controller cable (in order to take out the remote controller cable from the back), then seal the hole with putty.
- Take out the remote controller cable through the cut-out upper case, then seal the cut-out notch with putty.

B-1. To lead the remote controller cable from the back of the controller

B-2. To take out the remote controller cable through the upper portion

[Fig.4-2]

Ⓒ Wall	Ⓖ Switch box
Ⓓ Conduit	Ⓗ Remote controller cable
Ⓔ Lock nut	Ⓘ Seal with putty
Ⓕ Bushing	Ⓙ Wood screw

2) Connecting procedures (Fig. 4-3)

① Connect the remote controller cable to the terminal block.

Ⓐ To TB62 No.5 and 6 on the FTC unit
Ⓑ TB6 (No polarity)

4.4. Switch setting of FTC

Set the dip switch on the FTC (PCB) according to the following table.

System	ON/OFF Input	Change mode Input	Change TEMP. Input	Outdoor unit *4	SW1-1	SW1-2	SW1-5	SW1-6	SW6-1	SW6-2
BASIC	External input (non-voltage contact)	External input (non-voltage contact)	DIP switch on PCB SW2-1~8, SW3-1~3	SPLIT type	ON	OFF	OFF	ON	OFF	OFF
				PACKAGED type	ON	OFF	ON	ON	OFF	OFF
	External input (non-voltage contact)	External input (non-voltage contact)	Wired remote controller	SPLIT type	ON	OFF	OFF	OFF	OFF	OFF
				PACKAGED type	ON	OFF	ON	OFF	OFF	OFF
ANALOG TEMP.	External input or 4-20mA *1	External input (non-voltage contact)	4-20mA	SPLIT type	OFF	ON	OFF	OFF	ON	ON
				PACKAGED type	OFF	ON	ON	OFF	ON	ON
	External input or 1-5V *2	External input (non-voltage contact)	1-5V	SPLIT type	OFF	ON	OFF	OFF	OFF	ON
				PACKAGED type	OFF	ON	ON	OFF	OFF	ON
	External input	External input (non-voltage contact)	0-10V	SPLIT type	ON	ON	OFF	OFF	OFF	OFF
				PACKAGED type	ON	ON	ON	OFF	OFF	OFF
BASIC and SIMPLE	External input and *3 Wired remote controller	External input and *3 Wired remote controller	DIP switch on PCB SW2-1~8, SW3-1~3	SPLIT type	OFF	OFF	OFF	ON	OFF	OFF
				PACKAGED type	OFF	OFF	ON	ON	OFF	OFF
	External input and *3 Wired remote controller	External input and *3 Wired remote controller	Wired remote controller	SPLIT type	OFF	OFF	OFF	OFF	OFF	OFF
				PACKAGED type	OFF	OFF	ON	OFF	OFF	OFF
SIMPLE	Wired remote controller	Wired remote controller	Wired remote controller	SPLIT type	OFF	OFF	OFF	OFF	OFF	OFF
				PACKAGED type	OFF	OFF	ON	OFF	OFF	OFF

*1: 4-20mA····OFF: 0~2mA
*2: 1-5V····OFF: 0~0.5V
*3: The command from the external input is prior to the one from the wired remote controller.
*4: SPLIT type : the standard outdoor unit without a plate HEX(refrigerant-water) inside.
PACKAGED type : the Air to Water outdoor unit with a plate of HEX(refrigerant-water) inside

OTHER SWITCH SETTING

SW1-3 Prohibition of Cooling mode
SW1-3=OFF : Operation mode Heating/HeatingECO/HotWater/Anti-freeze/Cooling
SW1-3=ON : Operation mode Heating/HeatingECO/HotWater/Anti-freeze

SW1-4 SW3-4,5,8 Not in use. Set to OFF. (Initial setting)
SW3-7 Not in use. Set to ON. (Initial setting)

SW3-6 Logic of Forced Comp. OFF external signal(TB142 5-6)

SW3-6	TB142 No.5-6 input	Item
OFF	OFF(open)	Normal
	ON(short)	Forced Comp. OFF
ON	OFF(open)	Forced Comp. OFF
	ON(short)	Normal

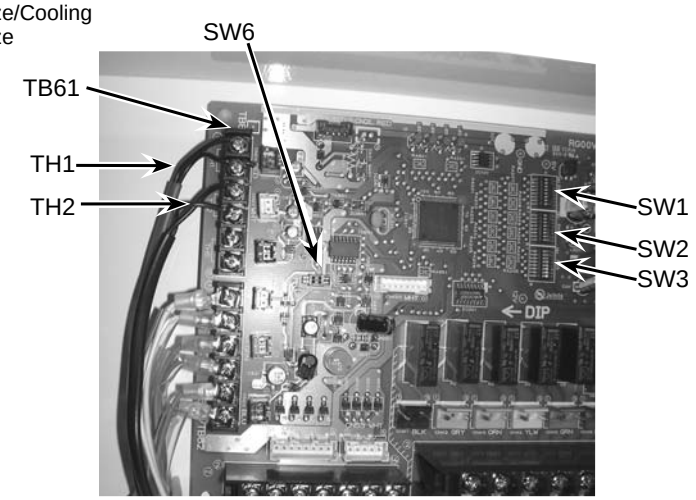

Photo.4-5

SW1-6,7,8 Set temperature range
SW1-6=OFF Set temperature range with wired remote controller
SW1-6=ON Set temperature table with DIP switch of FTC

SW1-6	SW1-7	SW1-8	Temperature range with wired remote controller			Temperature table SW2-1~8, SW3-1~3
			Heating/HeatingECO/Hot Water	Anti-Freeze	Cooling	
OFF	OFF	OFF	Upper 55 ˚C / lower 20 ˚C	Upper 45 ˚C / lower 5 ˚C	Upper 25 ˚C / lower 5 ˚C	—
OFF	ON	OFF	Upper 60 ˚C / lower 20 ˚C *1	Upper 45 ˚C / lower 5 ˚C	Upper 25 ˚C / lower 5 ˚C	—
OFF	OFF	ON	Upper 50 ˚C / lower 20 ˚C	Upper 45 ˚C / lower 5 ˚C	Upper 25 ˚C / lower 5 ˚C	—
OFF	ON	ON	—	—	—	—
ON	OFF	OFF	—	—	—	Table①
ON	ON	OFF	—	—	—	Table②
ON	OFF	ON	—	—	—	—
ON	ON	ON	—	—	—	—

*1.Don't use this setting when you use the standard outdoor unit without a plate HEX(Refrigerant-water) inside.

SW2-1~8 SW3-1~3 Fixed set temperature with DIP switch of FTC (Available when SW1-6 is ON)
SW2-1~3 Fixed set temperature for Heating mode (Table①~② depends on SW1-7,8.)

SW2-1	SW2-2	SW2-3	Table①	Table②
OFF	OFF	OFF	25 ºC	25 ºC
ON	OFF	OFF	30 ºC	30 ºC
OFF	ON	OFF	35 ºC	35 ºC
ON	ON	OFF	40 ºC	40 ºC
OFF	OFF	ON	45 ºC	45 ºC
ON	OFF	ON	50 ºC	50 ºC
OFF	ON	ON	55 ºC	55 ºC
ON	ON	ON	60 ºC *1	60 ºC *1

The selectable temperature range for Heating mode depends on outdoor unit type.
*1 Do not use this setting when you use the standard outdoor unit without a plate HEX(refrigerant-water) inside.

SW2-4~6 Fixed set temperature for Hot Water mode (Table①~② depends on SW1-7,8.)

SW2-4	SW2-5	SW2-6	Table①	Table②
OFF	OFF	OFF	46 ºC	25 ºC
ON	OFF	OFF	48 ºC	30 ºC
OFF	ON	OFF	50 ºC	35 ºC
ON	ON	OFF	52 ºC	40 ºC
OFF	OFF	ON	54 ºC	45 ºC
ON	OFF	ON	56 ºC	50 ºC
OFF	ON	ON	58 ºC	55 ºC
ON	ON	ON	60 ºC *1	60 ºC *1

The selectable temperature range for Hot Water mode depends on outdoor unit type.
*1 Do not use this setting when you use the standard outdoor unit without a plate HEX(refrigerant-water) inside.

SW2-7,8 Fixed set temperature for Anti-freeze mode (Table①~② depends on SW1-7,8.)

SW2-7	SW2-8	Table①	Table②
OFF	OFF	5 ºC	5 ºC
ON	OFF	10 ºC	10 ºC
OFF	ON	15 ºC	15 ºC
ON	ON	20 ºC	20 ºC

SW3-1~3 Fixed set temperature for Cooling mode(Table①~② depends on SW1-7,8.)

SW3-1	SW3-2	SW3-3	Table①	Table②
OFF	OFF	OFF	7 ºC	7 ºC
ON	OFF	OFF	10 ºC	10 ºC
OFF	ON	OFF	12 ºC	12 ºC
ON	ON	OFF	15 ºC	15 ºC
OFF	OFF	ON	18 ºC	18 ºC
ON	OFF	ON	20 ºC	20 ºC
OFF	ON	ON	22 ºC	22 ºC
ON	ON	ON	25 ºC	25 ºC

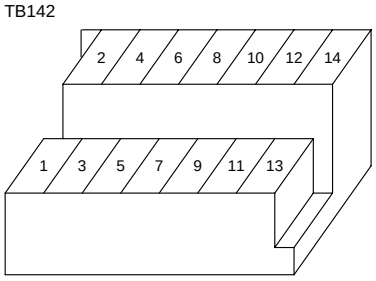

4.5. Connecting external input

FTC can be operated by following external input.

4.5.1 EXTERNAL INPUT (Contact signal)

TB142		OFF	ON	Remark
1-2	(IN1)	—	—	Not in use
3-4	(IN2)	—	—	Not in use
5-6	(IN3)	Normal	Forced Comp. OFF	SW3-6=OFF
		Forced Comp. OFF	Normal	SW3-6=ON
7-8	(IN4)	OFF	Cooling	
10-11	(COM-IN5)	OFF	Heating	
10-12	(COM-IN6)	OFF	Heating ECO *1	
10-13	(COM-IN7)	OFF	Hot Water	
10-14	(COM-IN8)	OFF	Anti-Freeze	

*1 Heating ECO mode sets the set temperature depending on the outdoor temperature.

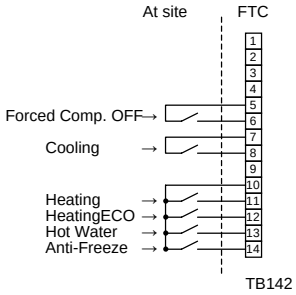

4.5.2 EXTERNAL INPUT (analog signal) 4-20mA / 1-5V / 0-10V

Connect the transmission cables to No. 3 and 4 on the terminal block (TB62).
No. 3 on the terminal block(TB62) : Plus side
No. 4 on the terminal block(TB62) : Minus side (Reference side)

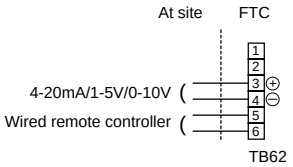

Switch setting

Input	Outdoor unit	SW1-1	SW1-2	SW1-5	SW1-6	SW6-1	SW6-2
4-20mA	SPLIT type	OFF	ON	OFF	OFF	ON	ON
	PACKAGED type	OFF	ON	ON	OFF	ON	ON
1-5V	SPLIT type	OFF	ON	OFF	OFF	OFF	ON
	PACKAGED type	OFF	ON	ON	OFF	OFF	ON
0-10V	SPLIT type	ON	ON	OFF	OFF	OFF	OFF
	PACKAGED type	ON	ON	ON	OFF	OFF	OFF

4-20mA / 1-5V / 0-10V setting

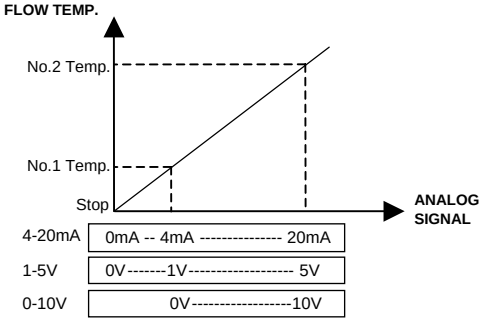

Refer to the section 8 for details about No1, 2 Temp.
The selectable set temperature range depends on SW1-7, 8.

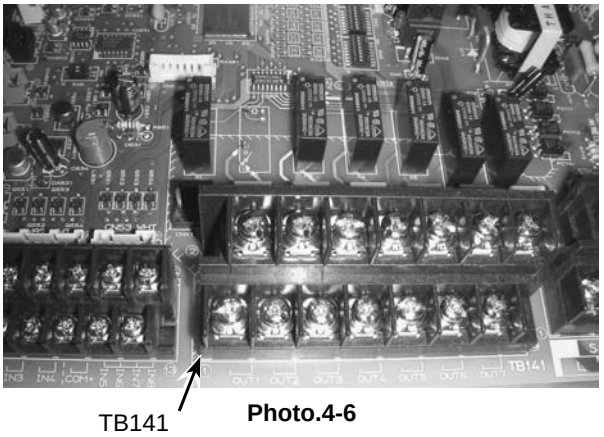

TB141 **Photo.4-6**

Caution:

The external input signals are separated by basic insulation from power supply for the unit.
The external input signals should be separated by supplementary insulation from where user may touch in case that it is installed where user may touch.
Connect the terminals by using the ring terminals and also insulate the cables of adjoining terminals when wiring to terminal block.

4.6. Connecting external output (Photo. 4-6)

TB141			Item	OFF	ON
1-2	(OUT1)	X1	Operation Output	OFF	ON
3-4	(OUT2)	X2	Error Output	Normal	Error
5-6	(OUT3)	X3	Comp. Output	OFF	ON
7-8	(OUT4)	X4	Defrost Output	OFF	ON
9-10	(OUT5)	X5	Mode(Cooling) Output	OFF	ON
11-12	(OUT6)	X6	Mode(Heating/HeatingECO/Hot Water/ Anti-Freeze) Output	OFF	ON
13-14	(OUT7)	X7	—	—	—

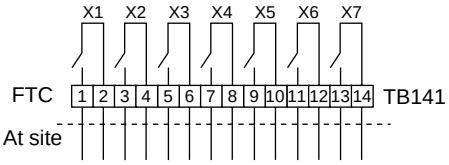

Note :

External output signals are separated by basic insulation from other circuit of interface.
Caution :
When 2 or more external outputs are used, the power supply on the output side should be the same.

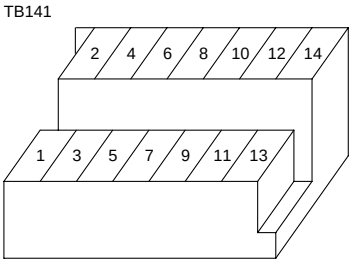

4.7. Wiring specification of External output / External input

Locally supplied parts

Item	Name	Model and specifications
External output function	External output signal wire	Use sheathed vinyl coated cord or cable. Max. 50m Wire type : CV, CVS or equivalent Wire size : Stranded wire 0.5mm^2 to 1.25mm^2 Solid wire: ϕ0.65mm to ϕ1.2mm
	Display lamp, etc.	Non-voltage Contact AC220-240V (DC30V), 1A or less *Connect the surge absorber according to the load at site.
External input function	External input signal wire	Use sheathed vinyl coated cord or cable. Max. 10m Wire type : CV, CVS or equivalent Wire size : Stranded wire 0.5mm^2 to 1.25mm^2 Solid wire : ϕ0.65mm to ϕ1.2mm
	Switch	Non-voltage "a" contact signals Remote switch : minimum applicable load DC 12V, 1mA

5. Before test run

5.1. Check

After completing installation and the wiring and piping of the local application and outdoor units, check for refrigerant leakage, looseness in the power supply or control wiring, wrong polarity, and no disconnection of one phase in the supply.
Use a 500-volt megohmmeter to check that the resistance between the power supply terminals and ground is at least 1.0MΩ.

Warning:
Do not use the system if the insulation resistance is less than 1.0MΩ.
Caution:
Do not carry out this test on the control wiring (low voltage circuit) terminals.

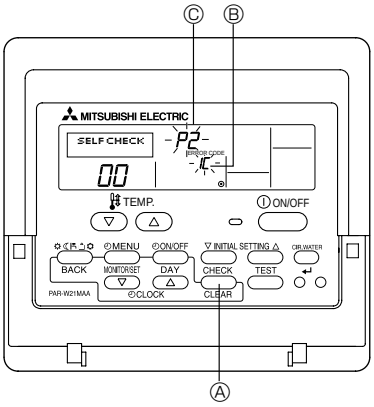

5.2. Self-check

①Turn on the power.
②Press [CHECK] button twice.
③Press [CHECK] button twice to finish self-check.

Ⓐ CHECK button Ⓑ IC : FTC unit OC : Outdoor unit Ⓒ Check code

Check code	Symptom
P1	Flow water (TH1) sensor error
P2	Refrigerant liquid Pipe (TH2) sensor error
P6	Freezing/Overheating protection operation
Fb	FTC unit control system error (memory error, etc.)
E0~E5	Signal transmission failure between remote controller and FTC.
E6~EF	Signal transmission failure between outdoor unit and FTC.
– – – –	No trouble generated in the past.
FFFF	No corresponding unit
U*, F*	Outdoor unit failure. Refer to the outdoor unit wiring diagram.

For description of each LED(LED1~5) provided on the FTC, refer to the following table.

LED 1 (Power for microcomputer)	Indicates whether control power is supplied. Make sure that this LED is always lit.
LED 2 (Power for remote controller)	Indicates whether power is supplied to the remote cotroller. This LED lights only in the case of the FTC unit which is connected to the outdoor unit refrigerant address “0“.
LED 3(Communication between FTC and outdoor unit)	Indicates state of communication between the FTC and outdoor unit. Make sure that this LED is always blinking.
LED 4	—
LED 5	—

6. Remote controller operation

Note (Marking for WEEE)

This symbol mark is for EU countries only.
This symbol mark is according to the directive 2002/96/EC Article 10 Information for users and Annex IV.
Your MITSUBISHI ELECTRIC product is designed and manufactured with high quality materials and components which can be recycled and re-used.
This symbol means that electrical and electronic equipment, at their end-of-life, should be disposed of separately from your household waste.
Please, dispose of this equipment at your local community waste collection/recycling centre.
In the European Union there are separate collection systems for used electrical and electronic product.
Please, help us to conserve the environment we live in!

6.1 Safety precautions

- ► **Before installing the unit, make sure you read all the “Safety Precautions”.**
- ► **The “Safety Precautions” provide very important points regarding safety. Make sure you follow them.**
- ► **Please report to or take consent by the supply authority before connection to the system.**

Symbols used in the text
⚠ **Warning:**
Describes precautions that should be observed to prevent danger of injury or death to the user.
⚠ **Caution:**
Describes precautions that should be observed to prevent damage to the unit.

Symbols used in the illustrations
⏚ : Indicates a part which must be grounded.

⚠ **Warning:**
- **For appliances not accessible to the general public.**
- **The unit must not be installed by the user. Ask the dealer or an authorized company to install the unit. If the unit is installed improperly, water leakage, electric shock or fire may result.**
- **Do not stand on, or place any items on the unit.**
- **Do not splash water over the unit and do not touch the unit with wet hands. An electric shock may result.**
- **Do not spray combustible gas close to the unit. Fire may result.**
- **Do not place a gas heater or any other open-flame appliance where it will be exposed to the air discharged from the unit. Incomplete combustion may result.**
- **Do not remove the front panel or the fan guard from the outdoor unit when it is running.**
- **When you notice exceptionally abnormal noise or vibration, stop operation, turn off the power switch, and contact your dealer.**
- **Never insert fingers, sticks etc. into the intakes or outlets.**
- **If you detect odd smells, stop using the unit, turn off the power switch and consult your dealer. Otherwise, a breakdown, electric shock or fire may result.**
- **This air conditioner is NOT intended for use by children or infirm persons without supervision.**
- **Young children must be supervised to ensure that they do not play with the air conditioner.**
- **If the refrigeration gas blows out or leaks, stop the operation of the air conditioner, thoroughly ventilate the room, and contact your dealer.**
- **Do not install in location that is hot or humid for long periods of time.**

⚠ **Caution:**
- **Do not use any sharp object to push the buttons, as this may damage the remote controller.**
- **Never block or cover the indoor or outdoor unit’s intakes or outlets.**

Disposing of the unit
When you need to dispose of the unit, consult your dealer.

6.2 Parts name

■ **Wired Remote-Controller**

Display Section

For purposes of this explanation, all parts of the display are shown. During actual operation, only the relevant items will be displayed.

Day-of-Week
Shows the current day of the week.

Time/Timer Display
Shows the current time, unless the simple or Auto Off timer is set.
If the simple or Auto Off timer is set, shows the time remaining.

ON/OFF indicator
Indicates if timer is set ON/OFF.

"Locked" indicator
Indicates that remote controller buttons have been locked.

Identifies the current operation
Shows the operating mode, etc.
* Multi language display is supported.

Timer indicators
The indicator comes on if the corresponding timer is set.

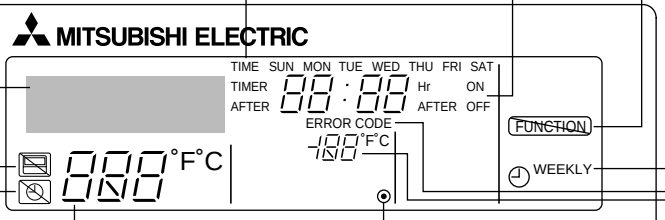

Error indicator
Comes on when error occurs.

"Centrally Controlled" indicator
Indicates that operation of the remote controller has been prohibited by a master controller.

Temperature indicator
Shows the current water temperature.

(Power On indicator)
Indicates that the power is on.

"Timer is Off" indicator
Indicates that the timer is off.

Temperature Setting
Shows the target temperature.

Operation Section

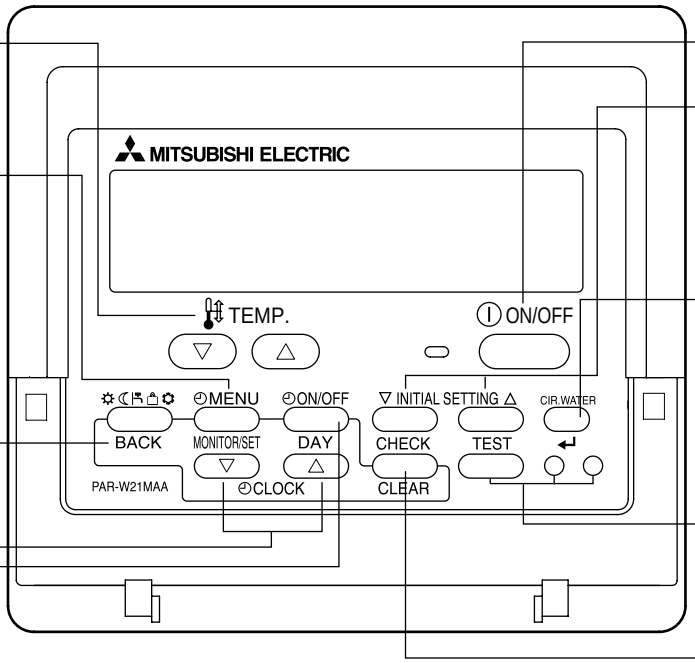

Set Temperature buttons
- Down
- Up

Timer Menu button (Monitor/Set button)

Mode button (Return button)

Set Time buttons
- Back
- Ahead

Timer On/Off button (Set Day button)

ON/OFF button

Setting change button

CIR. WATER ↵ button (<Enter> button)

Not available

TEST run function is not available with this FTC unit.

Self check(Clear) button

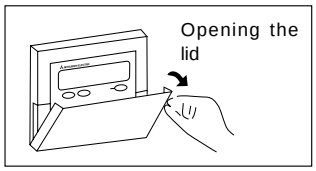

Note:
- "PLEASE WAIT" message
  This message is displayed for approximately 3 minutes when power is supplied to the FTC unit or when the unit is recovering from a power failure.
- "NOT AVAILABLE" message
  This message is displayed if a button is pressed to operate a function that the FTC unit does not have, or a function that is not available due to the setting.

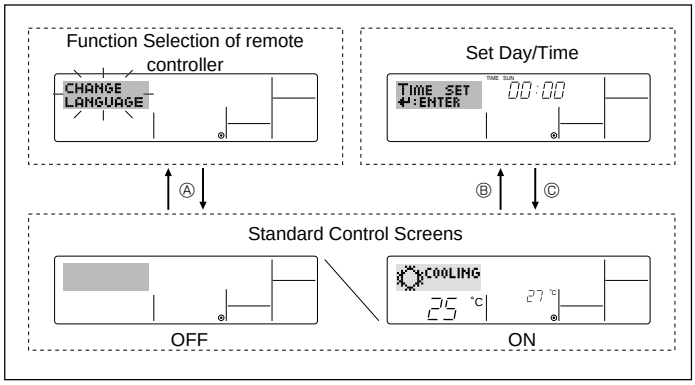

<Screen configuration>

For details on setting the language for the remote controller display, refer to 6.6. Function Selection.

The initial language setting is English.

- Function Selection of remote controller: Set the functions and ranges available to the remote controller (timer functions, operating restrictions, etc.)
- Set Day/Time: Set the current day of the week or time.
- Standard Control Screens: View and set the air conditioning system's operating status

<How to change the screen>

Ⓐ : Hold down both the Mode button ② and the Timer On/Off button ⑨ for 2 seconds.

Ⓑ : Press either of the Set Time buttons (▽ or △) ⑪.

Ⓒ : Press the Mode button ②.

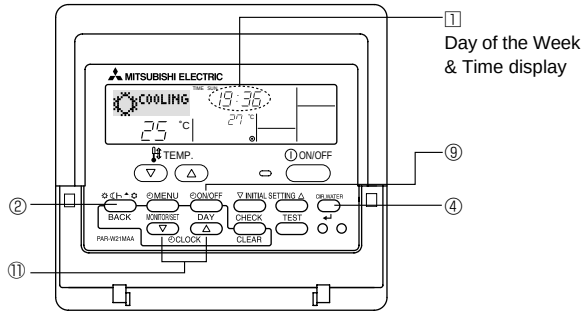

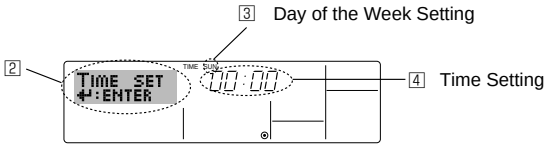

6.3 Setting the day of the week and time

1. Press the ▽ or △ Set Time button ⑪ to show display 2.
2. Press the Timer On/Off (Set Day) button ⑨ to set the day.
   * Each press advances the day shown at 3 :
     Sun → Mon → ... → Fri → Sat.
3. Press the appropriate Set Time button ⑪ as necessary to set the time.
   * As you hold the button down, the time (at 4) will increment first in one-minute intervals, then in ten-minute intervals, and then in 1-hour intervals.
4. After making the appropriate settings at Steps 2 and 3, press the ↵ button ④ to lock in the values.

Note:

The day and time will not appear if clock use has been disabled at Function Selection of remote controller.

6.4 Operation

Available items are different depending on your system.
(Refer to section 3.)

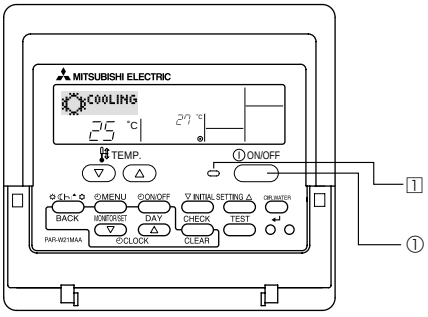

6.4.1 Switching

<To Start Operation>

■ Press the ON/OFF button ①.

- The ON lamp 1 and the display area come on.

Note:

When the unit restarts, the previous settings are recalled as follows.

	Remote controller setting
Mode	Last operation mode
Temperature setting	Last set temperature

<To Stop Operation>

■ Press the ON/OFF button ① again.

- The ON lamp 1 and the display area go dark.

Note:

Even if you press the ON/OFF button to restart the system while turning down the operation, the outdoor unit will not start for about 3 minutes.

This is to prevent the internal components from being damaged.

6.4.2. Mode select

Press operation mode (☼☾♨⌂✿) button② and select operation mode .

- ☼ Heating mode (Space heating)
- ☾ Heating ECO mode (Space heating with weather compensation *1)
- ♨ Hot water mode (Sanitary hot water)
- ⌂ Anti freeze mode (Heating to prevent water pipe from freezing)
- ✿ Cooling mode (Space cooling)

*1 Target flow temp. varies according to the outdoor temperature.(Refer to 7. for setting.)

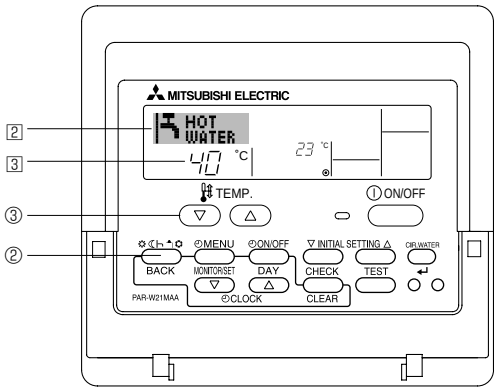

6.4.3. Temperature setting

► To decrease the target temperature:

Press (▼) button ③ to set the desired temperature.
The selected temperature is displayed 3.

► To increase the target temperature:

Press (▲) button ③ to set the desired temperature.
The selected temperature is displayed 3.

Note: Heating ECO mode sets the set temperature depending on the outdoor temperature.

6.5. Other Functions

6.5.1. Locking the Remote Controller Buttons (Operation function limit)

■ If you wish, you can lock the remote controller buttons. You can use the Function Selection of remote controller to select which type of lock to use.
(For information about the lock type, refer to 6.6, item[2].)
Specifically, you can use either of the following 2 lock types.

① Lock All Buttons:
Locks all of the buttons on the remote controller.
② Lock All Except ON/OFF:
Locks all buttons other than the ON/OFF button.

Note:
The "Locked" indicator appears on the screen to indicate that buttons are currently locked.

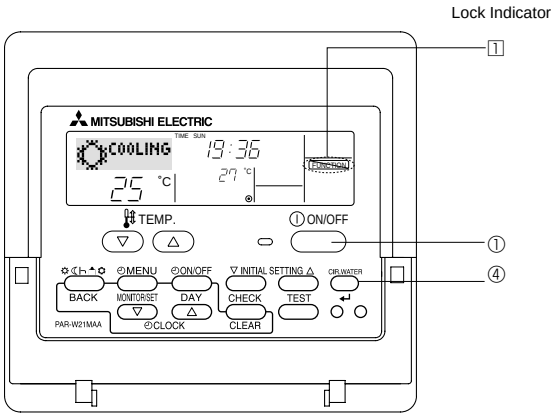

<How to Lock the Buttons>

1. While holding down the CIR. WATER button ④, press and hold down the ON/OFF button ① for 2 seconds. The "Locked" indication appears on the screen (at 1), indicating that the lock is now engaged.
   * If locking has been disabled in Function Selection of remote controller, the screen will display the "Not Available" message when you press the buttons as described above.

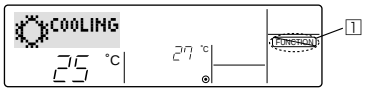

- If you press a locked button, the "Locked" indication (at 1) will blink on the display.

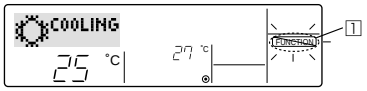

<How to Unlock the Buttons>

1. While holding down the CIR. WATER button ④, press and hold down the ON/ OFF button ① for 2 seconds—so that the "Locked" indication disappears from the screen (at 1).

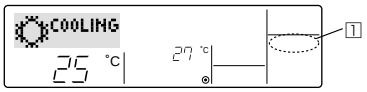

6.5.2. Error Codes indication

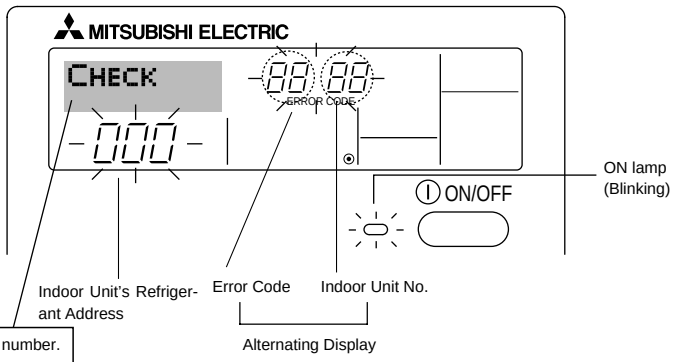

If you have entered contact number to be called in the event of a problem, the screen displays this number.
(You can set this up under Function Selection of remote controller. For information, refer to 6.6.)

- If the ON lamp and error code are both blinking: This means that the air conditioner is out of order and operation has been stopped (and cannot resume). Take note of the indicated unit number and error code, then switch off the power to the air conditioner and call your dealer or servicer.

When the Check button is pressed:

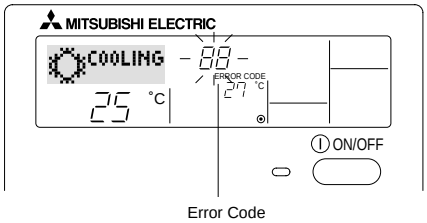

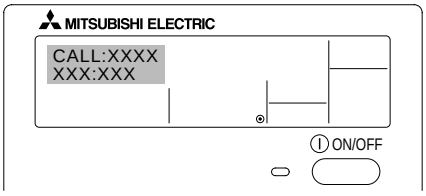

- If only the error code is blinking (while the ON lamp remains lit): Operation is continuing, but there may be a problem with the system. In this case, you should note down the error code and then call your dealer or servicer for advice.

* If you have entered contact number to be called in the event of a problem, push the Check button to display it on the screen. (You can set this up under Function Selection of remote controller. For information, refer to 6.6.)

6.6. Function Selection

Various remote controller functions are selectable in the remote controller function selection mode. Change setting when needed.

Item 1	Item 2	Item 3
1. Change language (“CHANGE LANGUAGE”)	Language setting to display	• Some European languages are selectable.
2. Function limit (“FUNCTION SELECTION”)	(1) Operation function limit setting (operation lock) (“LOCKING FUNCTION”)	• To invalidate some functions.
	(2) Use of operation mode setting (“SELECT MODE”)	• Setting the use or non-use of operation mode
	(3) Temperature range limit setting (“LIMIT TEMP FUNCTION”)	• Setting the temperature adjustable range (maximum, minimum)
3. Mode selection (“MODE SELECTION”)	(1) Remote controller main/sub setting (“CONTROLLER MAIN/SUB”)	• Selecting main or sub remote controller * When 2 remote controllers are connected to 1 group, 1 controller must be set to sub.
	(2) Use of clock setting (“CLOCK”)	• To select the use or non-use of clock function
	(3) Timer function setting (“TIMER MODE”)	• To select the timer type
	(4) Contact number setting in case of fault (“CALL.”)	• Contact number display in case of error • To select the telephone number
	(5) Temperature offset setting(“TEMP OFFSET FUNCTION”)	• To select the use or non-use of the water temperature offset funstion
4. Display change (“DISP MODE SETTING”)	(1) Temperature display °C/°F setting (“TEMP MODE °C/°F”)	• To select the temperature unit (°C or °F) to display
	(2) Water temperature display setting(“WATER TEMP. DISP. SELECT”)	• To select the use or non-use of the display of “actual flow water temperature”

[Function selection flow chart]
Setting language(English)

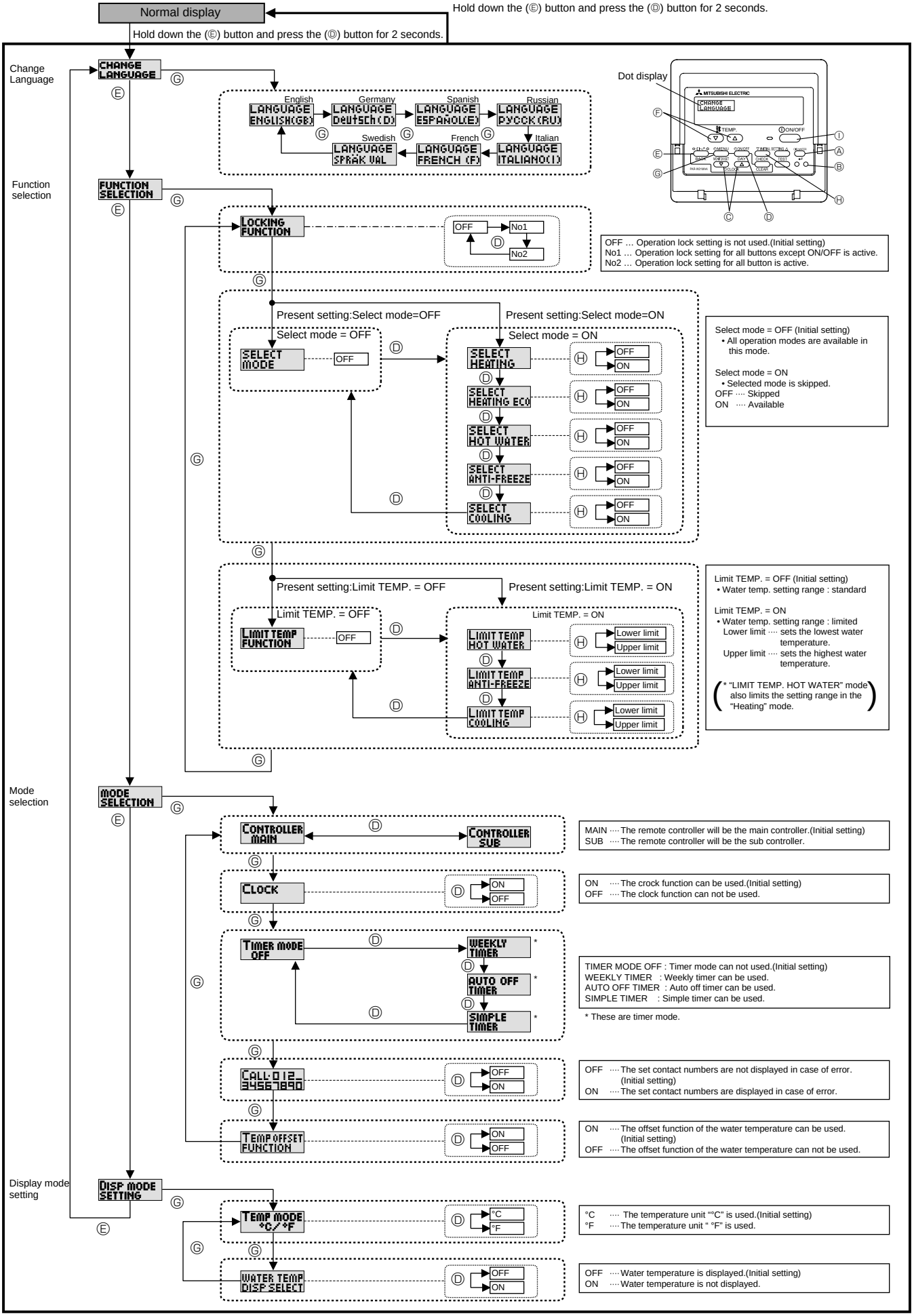

[Detailed setting]

[4]-1 CHANGE LANGUAGE setting

The language that appears on the dot display can be selected.

- Press the [◴ MENU] button Ⓖ to change the language.
  ① English (GB), ② German (D), ③ Spanish (E), ④ Russian (RU), ⑤ Italian (I), ⑥ French (F), ⑦ Swedish (SW)

Refer to the dot display table.

[4]-2 Function selection setting

(1) Operation function limit setting (operation lock)

- To switch the setting, press the [◴ ON/OFF] button Ⓓ.
  ① no1: Operation lock setting is made on all buttons other than the [⏻ ON/OFF] button ①.
  ② no2: Operation lock setting is made on all buttons.
  ③ OFF (Initial setting value): Operation lock setting is not made.

* To make the operation lock setting valid on the normal screen, it is necessary to press buttons (Press and hold down the [CIR. WATER] Ⓐ and [⏻ ON/OFF] buttons ① at the same time for 2 seconds.) on the normal screen after the above setting is made.

(2) Use of operation mode setting

When the remote controller is connected to the unit that has the operation mode, the following settings can be made.

- To switch the setting, press the [◴ ON/OFF] button Ⓓ.

① SELECT HEATING
ON····· HEATING mode can be selected.
OFF···· HEATING mode is skipped.

② SELECT HEATING ECO
ON····· HEATING ECO mode can be selected.
OFF···· HEATING ECO mode is skipped.

③ SELECT HOT WATER
ON····· HOT WATER mode can be selected.
OFF···· HOT WATER mode is skipped.

④ SELECT ANTI-FREEZE
ON····· ANTI-FREEZE mode can be selected.
OFF···· ANTI-FREEZE mode is skipped.

⑤ SELECT COOLING
ON····· COOLING mode can be selected.
OFF···· COOLING mode is skipped.

⑥ SELECT MODE OFF(Initial setting value)
The all operation mode is displayed when the mode is selected.

(3) Temperature range limit setting

After this setting is made, the temperature can be changed within the set range.

- To switch the setting, press the [◴ ON/OFF] button Ⓓ.
  ①LIMIT TEMP HOT WATER MODE:
  The temperature range can be changed on hot water / heating mode.
  ② LIMIT TEMP ANTI-FREEZE MODE:
  The temperature range can be changed on anti-freeze mode.
  ③LIMIT TEMP COOLING MODE:
  The temperature range can be changed on cooling mode.
  ④OFF (initial setting): The temperature range limit is not active.
  * When the setting other than OFF is made, the temperature range limit setting on heating, hot water, anti-freeze, and cooling mode is made at the same time. However, the range cannot be limited when the set temperature range has not changed.
- To increase or decrease the temperature, press the [TEMP. (▽) or (△)] button Ⓕ.
- To switch the upper limit setting and the lower limit setting, press the [▽ INITIAL SETTING] button Ⓗ. The selected setting will blink and the temperature can be set.

[4]-3 Mode selection setting

(1) Remote controller main/sub setting

- To switch the setting, press the [◴ ON/OFF] button Ⓓ.
  ① Main: The controller will be the main controller.
  ② Sub: The controller will be the sub controller.

(2) Use of clock setting

- To switch the setting, press the [◴ ON/OFF] button Ⓓ.
  ① ON: The clock function can be used.
  ② OFF: The clock function cannot be used.

(3) Timer function setting

- To switch the setting, press the [◴ ON/OFF] button Ⓓ (Choose one of the followings.).
  ① WEEKLY TIMER:
  The weekly timer can be used.
  ② AUTO OFF TIMER:
  The auto off timer can be used.
  ③ SIMPLE TIMER:
  The simple timer can be used.
  ④ TIMER MODE OFF(Initial setting):
  The timer mode cannot be used.

* When the use of clock setting is OFF, the “WEEKLY TIMER” cannot be used.

(4) Contact number setting for error situation

- To switch the setting, press the [◴ ON/OFF] button Ⓓ.
  ① CALL OFF:
  The set contact numbers are not displayed in case of error.
  ② CALL **** *** ****:
  The set contact numbers are displayed in case of error.
  CALL_:
  The contact number can be set when the display is as shown above.
- Setting the contact numbers
  To set the contact numbers, follow the following procedures. Move the blinking cursor to set numbers. Press the [TEMP. (▽) and (△)] button Ⓕ to move the cursor to the right (left). Press the [◴ CLOCK (▽) and (△)] button Ⓒ to set the numbers.

(5) Use of water temperature offset function

- To switch the setting, press the [◴ ON/OFF] button Ⓓ.
  ① ON: The water temperature offset function can be used.
  ② OFF: The water temperature offset function cannot be used.

* Refer to page 23 for details of offset function.

[4]-4 Display change setting

(1) Temperature display °C/°F setting

- To switch the setting, press the [◴ ON/OFF] button Ⓓ.
  ① °C: The temperature unit °C is used.
  ② °F: The temperature unit °F is used.

(2) Water temperature display setting

- To switch the setting, press the [◴ ON/OFF] button Ⓓ.
  ① ON: Water temperature is displayed.
  ② OFF: Water temperature is not displayed.

[Dot display table]

Selecting language		English	German	Spanish	Russian	Italian	French	Swedish
Waiting for start-up		PLEASE WAIT	←	←	←	←	←	←
Operation mode	Heating	HEATING	HEIZEN	CALOR	НАГРЕВ	RISCALD.	CHAUD	VÄRME DRIFT
	Heating ECO	HEATING ECO	HEIZEN ECO	CALOR ECO	НАГРЕВ ЭКОНОМ	RISCALD. ECO	CHAUFF-AGE ECO	VÄRME ECO
	Hot water	HOT WATER	BRAUCH-H2O	AGUA CALIENTE	ГОРЯЧАЯ ВОДА	ACQUA C. SANIT.	EAU CHAUDE	VARM VATTEN
	Anti-freeze	ANTI-FREEZE	FROST SCHUTZ	ANTI-CONGEL.	АНТИ-ФРИЗ	ANTI GELO	ANTI GIVRE	FRYS SKYDD
	Cooling	COOLING	KÜHLEN	FRIO	ОХЛАЖ-ДЕНИЕ	RAFFRED.	FROID	KYL DRIFT
	Stand by (Hot adjust)	STAND BY	STAND BY	CALENTANDO	ОБОГРЕВ: ПАУЗА	STAND BY	PRE CHAUFFAGE	STAND BY
	Defrost	DEFROST	Abtauen	DESCONGE-LACIÓN	ОТТАИВАНИЕ	SBRINA MENTO	DEGIVRAGE	AVFROST
Not use button		NOT AVAILABLE	nicht Verfügbar	NO DISPONIBLE	НЕ ДОСТУПНО	NON DISPONIBILE	NON DISPONIBLE	FINNS EJ
Check (Error)		CHECK	Prüfen	COMPROBAR	ПРОВЕРКА	CHECK	CONTROLE	PLEASE WAIT
Test run		TEST RUN	Testbetrieb	TEST FUNCIO NAMIENTO	ТЕСТОВЫЙ ЗАПУСК	TEST RUN	TEST	CHANGE LANGUAGE
Self check		SELF CHECK	Selbst-diagnose	AUTO REVISIÓN	САМОДИАГ-НОСТИКА	SELF CHECK	AUTO CONTROLE	LANGUAGE SPRÅK VAL
Change language		CHANGE LANGUAGE	←	←	←	←	←	←
Language selection		LANGUAGE ENGLISH(GB)	LANGUAGE Deutsch(D)	LANGUAGE ESPAÑOL(E)	LANGUAGE РУССК(RU)	LANGUAGE ITALIANO(I)	LANGUAGE FRENCH (F)	LANGUAGE SPRÅK VAL
Display change		DISP MODE SETTING	Anzeige Betriebsart	MOSTRAR MODO	НАСТРОЙКА ИНД.РЕЖИМА	IMPOSTAZIONE MODO DISPLAY	AFFICHAGE SOUS MENU	DISPLAY LÄGE VAL
Temperature display °C/°F setting		TEMP MODE °C/°F	Wechsel °C/°F	TEMP.GRADOS °C/°F	ЕДИН.ТЕМПЕР. °C/°F	TEMPERATURA °C/°F	TEMPERATURE °C/°F	VAL AV TEMP MODE °C/°F
Water temperature display setting		WATER TEMP DISP SELECT	H2O-TEMP. DISP WAHL	VISUALIZAR TEMP. AGUA	ИНДИКАЦИЯ t° ВОДЫ	VISUALIZZA TEMP.ACQUA	AFFICHAGE TEMP EAU	VATTEN TEMP DISPLAYVAL
Function selection		FUNCTION SELECTION	Funktion auswahlen	SELECCIÓN DE FUNCIONES	ВЫБОР ФУНКЦИИ	SELEZIONE FUNZIONI	SELECTION FONCTIONS	DRIFT VAL
Operation function limit setting		LOCKING FUNCTION	Sperr-Funktion	FUNCIÓN BLOQUEADA	ФУНКЦИЯ БЛОКИРОВКИ	BLOCCO FUNZIONI	BLOCAGE FONCTIONS	DRIFT LÅS

Selecting language		English	German	Spanish	Russian	Italian	French	Swedish
Mode skip setting		SELECT MODE	AUSWAHL BETRIEBSART	ELEGIR MODO	Удалить режим	PROIBIZIONE MODO	SELECTION MODE INACTIF	DRIFTVAL MODE
Mode skip	Heating	SELECT HEATING	AUSWAHL HEIZEN	ELEGIR MODO CALOR	Удалить: нагрев	PROIBIZIONE RISCALD.	CHAUFFAGE INACTIF	VAL VÄRMEDRIFT
	Heating ECO	SELECT HEATING ECO	AUSWAHL HEIZEN-ECO	ELEGIR CALOR ECO	Удалить: нагрев экон	PROIBIZIONE RISCALD.ECO	CHAUFFAGE ECO INACTIF	VAL VÄRME ECO
	Hot water	SELECT HOT WATER	AUSWAHL BRAUCH-H2O	ELEGIR AGUA CALIEN.	Удалить: горяч. вода	PROIBIZIONE ACQUA SAN.	EAU CHAUDE INACTIVE	VAL VARMVATTEN
	Anti-freeze	SELECT ANTI-FREEZE	AUSWAHL FROSTSCHUTZ	ELEGIR ANTICONGEL.	Удалить: антифриз	PROIBIZIONE ANTIGELO	ANTI GIVRE INACTIF	VAL FRYSSKYDD
	Cooling	SELECT COOLING	AUSWAHL KÜHLEN	ELEGIR MODO FRIO	Удалить: охлаждение	PROIBIZIONE RAFFREDD.	FROID INACTIF	VAL KYLDRIFT
Temperature range limit setting		LIMIT TEMP FUNCTION	Limit Temp Funktion	LÍMIT TEMP CONSIGNA	Ограничение уст.температ	LIMITAZIONE TEMPERATURA	LIMITATION TEMPERATURE	MIN MAX TEMP VAL
Temperature range limit setting mode	Hot water	LIMIT TEMP HOT WATER	LIMIT TEMP BRAUCH-H2O	TEMP LIMITE AGUA CALIEN.	Огранич. t°: горяч. вода	LIMITE TEMP. ACQUA SAN.	LIMITE TEMP EAU CHAUDE	MAXTEMP VARMVATTEN
	Anti-freeze	LIMIT TEMP ANTI-FREEZE	LIMIT TEMP FROSTSCHUTZ	TEMP LIMITE ANTICONGEL.	Огранич. t°: антифриз	LIMITE TEMP. ANTIGELO	LIMITE TEMP ANTI GIVRE	MINTEMP FRYSSKYDD
	Cooling	LIMIT TEMP COOLING	LIMIT TEMP KÜHLEN	TEMP LIMITE MODO FRIO	Огранич. t°: охлаждение	LIMITE TEMP. RAFFREDD.	LIMITE TEMP EN FROID	MINTEMP KYLDRIFT
Mode selection		MODE SELECTION	Betriebsart wahlen	SELECCIÓN DE MODO	Выбор режима	SELEZIONE MODO	SELECTION DU MODE	LÄGE VAL
Remote controller setting MAIN		CONTROLLER MAIN	Haupt controller	CONTROL PRINCIPAL	Основной пульт	CONTROLLO MAIN	TELCOMMANDE MAITRE	MASTER STYR
Remote controller setting SUB		CONTROLLER SUB	Neben controller	CONTROL SECUNDARIO	Дополнитель-ный пульт	CONTROLLO SUB	TELCOMMANDE ESCLAVE	SLAV STYR
Use of clock setting		CLOCK	Uhr	RELOJ	Часы	OROLOGIO	AFFICHAGE HORLOGE	KLOCKA
Setting the day of the week and time		TIME SET ↵:ENTER	Uhr stellen ↵:einstellen	CONFIG RELOJ ↵:CONFIG	Часы: уст. ↵:ввод	OROLOGIO ↵:ENTER	HORLOGE ↵:ENTRER	TIME SET ↵:ENTER
Contact number setting		CALL·012_ 34567890	CALL·012_ 34567890	CALL·012_ 34567890	CALL·012_ 34567890	CALL·012_ 34567890	CALL·012_ 34567890	RING:344_ 455565
Temperature off set function		TEMP OFFSET FUNCTION	SET △T FUNKTION	AJUSTE TEMP DIFERENCIAL	Погрешность измерения	IMPOSTA OFFSET	REGLAGE DELTA T EAU	TEMP DIFFERENS
Temperature off set function (Heating)		TEMP OFFSET HEATING	SET △T HEIZEN	DIFERENCIAL MODO CALOR	Погрешность нагрев	OFFSET ACQUA RISCALD.	EN MODE CHAUD	TEMP DIFFE-RENS VÄRME
Temperature off set function (Cooling)		TEMP OFFSET COOLING	SET △T KÜHLEN	DIFERENCIAL MODO FRIO	Погрешность охлаждение	OFFSET ACQUA RAFFREDD.	EN MODE FROID	TEMP DIFFE-RENS KYLA
Timer set		TIMER SET ↵:ENTER	Zeitschaltuhr ↵:einstellen	TEMPORIZA-DOR↵:CONFIG	Таймер: уст. ↵:ввод	TIMER ↵:ENTER	PROG HORAIRE ↵:ENTRER	TIMER SET ↵:ENTER
Timer monitor		TIMER MONITOR	Uhrzeit Anzeige	VISUALIZAR TEMPORIZAD.	Просмотр таймера	VISUALIZ TIMER	AFFICHAGE PROG HORAIRE	TIMER MONITOR
Timer mode off		TIMER MODE OFF	Zeitschaltuhr AUS	TEMPORIZA-DOR APAGADO	Таймер выкл.	TIMER OFF	PROG HORAIRE INACTIF	TIMER LÄGE AV
Timer function setting		WEEKLY TIMER	Wochenzeit Schalt Uhr	TEMPORIZA-DOR SEMANAL	Недельный таймер	TIMER SETTIMANALE	PROG HEBDO MADAIRE	VECOK TIMER
Simple timer		SIMPLE TIMER	Einfache Zeitfunktion	TEMPORIZA-DOR SIMPLE	Простой таймер	TIMER SEMPLIFICATO	PROG HORAIRE SIMPLIFIE	ENKEL TIMER

[Dot display table]

Selecting language		English	German	Spanish	Russian	Italian	French	Swedish
Auto off timer		AUTO OFF TIMER	Auto Zeit funktion aus	APAGADO AUTOMÁTICO	Автоотключ. по таймеру	AUTO OFF TIMER	PROG HORAIRE ARRET AUTO	AUTO TIMER AV
Function selection		FUNCTION SELECTION	Funktion auswahlen	SELECCIÓN DE FUNCIONES	Выбор функции	SELEZIONE FUNZIONI	SELECTION FONCTIONS	LÄGE VAL
Check (Error)		CHECK	Prüfen	COMPROBAR	Проверка	CHECK	CONTROLE	CHECK
Test run		TEST RUN	Testbetrieb	TEST FUNCIO NAMIENTO	Тестовый запуск	TEST RUN	TEST	TEST LÄGE
Self check		SELF CHECK	Selbst-diagnose	AUTO REVISIÓN	Самодиаг-ностика	SELF CHECK	AUTO CONTROLE	SJÄLV CHECK
Colective setting		COLLECTIVELY SETTING	COLLECTIVELY SETTING	COLLECTIVELY SETTING	COLLECTIVELY SETTING	COLLECTIVELY SETTING	COLLECTIVELY SETTING	KOLEKTIV VAL
Water temperature (Initial setting)	Heating	WATER TEMP HEATING	SOLLWERT HEIZEN	TEMP. AGUA MODO CALOR	t° воды: нагрев	TEMP.ACQUA RISCALD.	TEMP EAU CHAUFFAGE	BÖRVÄRDE VÄRMEDRIFT
	Heating ECO	WATER TEMP HEATING ECO	SOLLWERT HEIZEN-ECO	TEMP. AGUA CALOR ECO	t° воды: нагрев эко	TEMP.ACQUA RISCALD.ECO	TEMP EAU CHAUDE ECO	BÖRVÄRDE VÄRME ECO
	Hot water	WATER TEMP HOT WATER	SOLLWERT BRAUCH-H2O	TEMP. AGUA AGUA CALIEN.	t° воды: горяч. вода	TEMP.ACQUA SANITARIA	REGLAGE TEMP EAU CHAUDE	BÖRVÄRDE VÄRMVATTEN
	Anti-freeze	WATER TEMP ANTI-FREEZE	SOLLWERT FROSTSCHUTZ	TEMP. AGUA ANTICONGEL.	t° воды: антифриз	TEMP.ACQUA ANTIGELO	TEMP ANTI GIVRE	BÖRVÄRDE FRYSSKYDD
	Cooling	WATER TEMP COOLING	SOLLWERT KÄLT-H2O	TEMP. AGUA MODO FRIO	t° воды: охлаждение	TEMP.ACQUA RAFFREDD.	TEMP EAU EN FROID	BÖRVÄRDE KYLDRIFT
Option setting(Heating)		AD INPUT HEATING	AD-EINGANG HEIZEN	ENTRADA AD MODO CALOR	Диапазон t нагрев	INPUT TEMP. RISCALD.	SIGNAL ENTREE EN CHAUD	KONFIGURE VÄRMEDRIFT
Option setting(Cooling)		AD INPUT COOLING	AD-EINGANG KÜHLEN	ENTRADA AD MODO FRIO	Диапазон t охлаждение	INPUT TEMP. RAFFREDD.	SIGNAL ENTREE EN FROID	KONFIGURE KYLDRIFT
Water circuit check		Check Water circuit	PRÜFE H2O-KREIS	COMPROBAR CIRCUIT. AGUA	Проверьте контур воды	VERIFICARE CIRC.ACQUA	CONTROLE FILTRE A EAU	VATTENFILTER CHECK
Waiting for response		LOADING...	LADE...	CARGANDO	Загрузка настроек...	LOADING...	CHARGEMENT	BEKRÄFTAR
Waiting for setting		SETTING	EINSTELLUNG	AJUSTES	Отправка настроек	SETTING...	REGLAGE	KONFIGURE
Not dealt with		NOT AVAIL	NOT AVAIL	NOT AVAIL	NOT AVAIL	NOT AVAIL	NOT AVAIL	NOT AVAIL
Maintenance		MAINTENANCE	MAINTENANCE	MAINTENANCE	MAINTENANCE	MAINTENANCE	MAINTENANCE	MAINTENANCE

7. Initial setting by remote controller

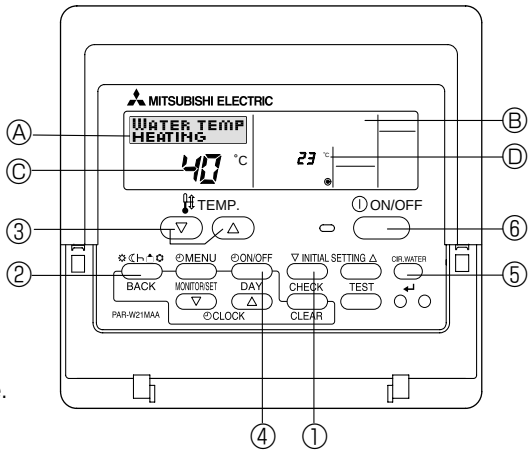

(1) Press the (INITIAL SETTING▽) button ① for 3 seconds to activate the initial setting mode.

(2) [DISPLAY Ⓐ]

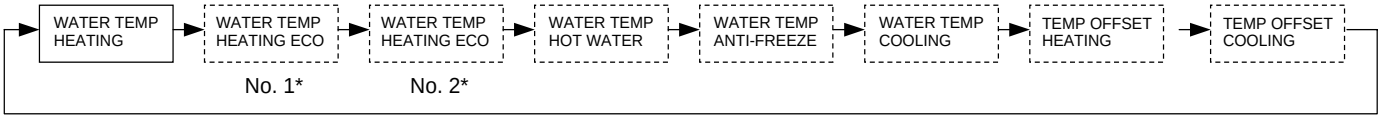

* No.1 or No.2 is indicated in display Ⓑ.

Press (MODE) button ② to switch to the next parameter setting.

<Target temperature in heating mode>

WATER TEMP HEATING

Set target flow water temperature in Heating mode with [TEMP] buttons (▽ and △) ③.

<Parameters for Heating ECO mode>

Set following 4 parameters in HEATING ECO mode with [TEMP] buttons (▽ and △) ③.
HEATING ECO mode= Weather compensation mode
Target flow water temperature varies according to the outdoor temperature.

WATER TEMP HEATING ECO

No.1 Display Ⓒ shows target flow temperature.
Display Ⓓ shows outdoor temperature.

WATER TEMP HEATING ECO

No. 2 Display Ⓒ shows target flow temperature.
Display Ⓓ shows outdoor temperature.

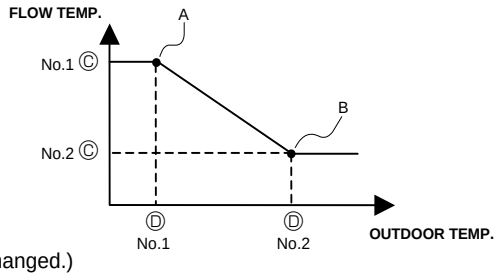

Press (◴ ON/OFF) button ④ to switch Ⓒ ⇄ Ⓓ alternately. (The blinking figure can be changed.)

Note:
· Heating ECO mode sets the set temperature depending on the outdoor temperature.
· The parameters except the above 4 parameters cannot be set. (The characteristic is linear between the point A and B.)
· When the "EXTERNAL INPUT(analog signal)" is used, the "HEATING ECO MODE" is invalid.

<Target temperature in HOT WATER mode>

WATER TEMP HOT WATER

Set target flow water temperature in HOT WATER mode with [TEMP] buttons (▽ and △) ③.

<Target temperature in ANTI-FREEZE mode>

WATER TEMP ANTI-FREEZE

Set target flow water temperature in ANTI-FREEZE mode with [TEMP] buttons (▽ and △) ③.

<Target temperature in COOLING mode>

WATER TEMP COOLING

Set target flow water temperature in COOLING mode with [TEMP] buttons (▽ and △) ③.

<Temperature OFFSET setting>

This setting is to adjust the difference between the actual flow water temperature at the refrigerant-water heat exchanger outlet and the temperature sensed by TH1 which tends to be lower due to heat leakage from water piping.

HEATING mode

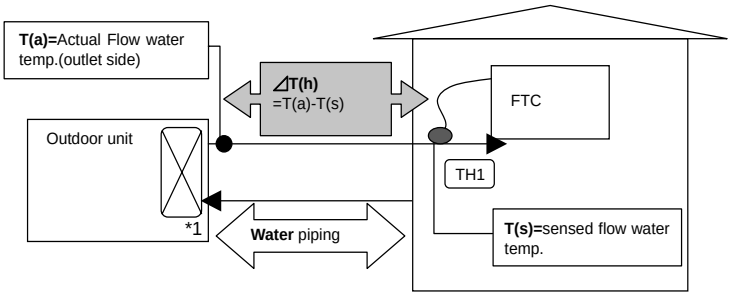

COOLING mode

*1 Refrigerant-water HEX

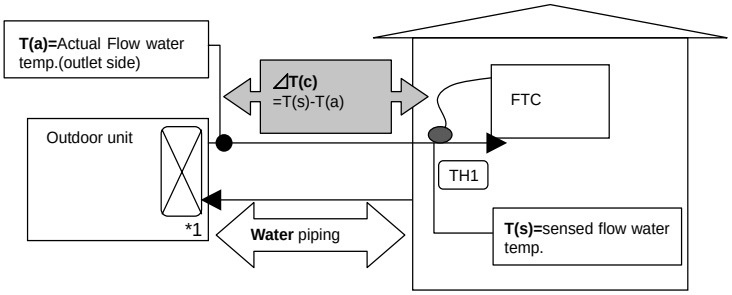

TEMP OFFSET HEATING — Set OFFSET temperature ⊿T(h) in HEATING mode with [TEMP] buttons (▽ and △) ③.

TEMP OFFSET COOLING — Set OFFSET temperature ⊿ T(c) in COOLING mode with [TEMP] buttons (▽ and △) ③.

♦ In order to let the PCB memorize the changed parameters
Make sure to press the CIR.WATER button ⑤ before quitting the INITIAL SETTING mode.
If you press the ON/OFF button ⑥ in INITIAL SETTING mode before pressing the CIR.WATER button ⑤, you can exit from this mode without any change.

8. Definition of analog signal by remote controller(Required only for ANALOG TEMP. system)

Set following 2 parameters to assign the target temperature value to analog signal figures.

(1) Press (INITIAL SETTING) button ① for 3 seconds to activate this setting mode.

(2) [DISPLAY Ⓐ]

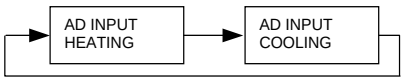

Press (MODE) button ② to switch to the next parameter setting.

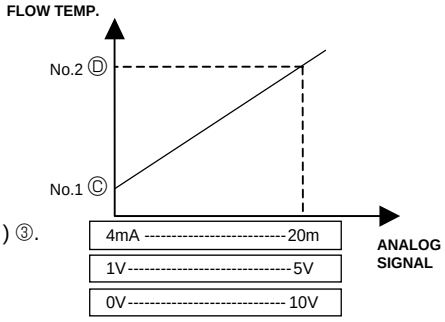

AD INPUT HEATING — Set flow temp. for No.1 and No.2 with [TEMP] buttons (▽ and △) ③.

AD INPUT COOLING — Set flow temp. for No.1 and No.2 with [TEMP] buttons (▽ and △) ③.

Press (ON/OFF) button ④ to switch Ⓒ ⇄ Ⓓ alternately. (The blinking figure can be changed.)

♦ In order to let FTC memorize set parameters
Make sure to press (CIR.WATER) button ⑤ before exit from ANALOG SIGNAL ADJUST mode.
If you press (ON/OFF) button ⑥ before pressing (CIR.WATER) button ⑤ in ADJUST mode, you can exit from this mode without making any change.

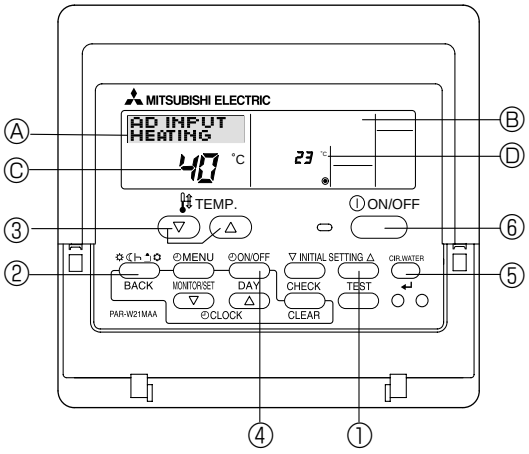

9. Troubleshooting

Water does not heat or cool well.	■ Clean the filter of water piping. (Flow is reduced when the filter is dirty or clogged.) ■ Check the temperature adjustment and adjust the set temperature. ■ Make sure that there is plenty of space around the outdoor unit.
Water or vapor is emitted from the outdoor unit.	■ During cooling mode, water may form and drip from the cool pipes and joints. ■ During heating mode, water may form and drip from the heat exchanger of outdoor unit. ■ During defrosting mode, water on the heat exchanger of outdoor unit evaporates and water vapor may be emitted.
The operation indicator does not appear in the remote controller display.	■ Turn on the power switch. "◉" will appear in the remote controller display.
"⊠" appears in the remote controller display.	■ During external signal control, "⊠" appears in the remote controller display and FTC operation cannot be started or stopped using the remote controller.
When restarting the outdoor unit soon after stopping it, it does not operate even though the ON/OFF button is pressed.	■ Wait approximately 3 minutes. (Operation has stopped to protect the outdoor unit.)
FTC operates without the ON/OFF button being pressed.	■ Is the on timer set? Press the ON/OFF button to stop operation. ■ Is the FTC connected to a external signal? Consult the concerned people who control the FTC. ■ Does "⊠" appear in the remote controller display? Consult the concerned people who control the FTC. ■ Has the auto recovery feature from power failures been set? Press the ON/OFF button to stop operation.
FTC stops without the ON/OFF button being pressed.	■ Is the off timer set? Press the ON/OFF button to restart operation. ■ Is the air conditioner connected to a central remote controller? Consult the concerned people who control the FTC. ■ Does "⊠" appear in the remote controller display? Consult the concerned people who control the FTC.
Remote controller timer operation cannot be set.	■ Are timer settings invalid? If the timer can be set, (WEEKLY) , (SIMPLE) , or (AUTO OFF) appears in the remote controller display.
"PLEASE WAIT" appears in the remote controller display.	■ The initial settings are being performed. Wait approximately 3 minutes. ■ If the remote controller is not only for FTC, change it.
An error code appears in the remote controller display.	■ The protection devices have operated to protect the FTC and outdoor unit. ■ Do not attempt to repair this equipment by yourself. Turn off the power switch immediately and consult your dealer. Be sure to provide the dealer with the model name and information that appeared in the remote controller display.

Guide to plan local applications

* This FTC is to connect Mr. Slim inverter outdoor unit of MITSUBISHI ELECTRIC to local applications. Be sure to check the following when planning local applications.
* MITSUBISHI ELECTRIC does not take any responsibility on the local system design.

Heat exchanger

(1) Withstanding pressure

Designed pressure of outdoor unit is 4.15 MPa. Following must be satisfied for burst pressure of connecting application.
Burst pressure : More than 12.45 MPa (3 times more than designed pressure)

(2) Performance

Secure the heat exchanger capacity which meets the following conditions. If the conditions are not met, it may result in malfunction caused by the protection operation or the outdoor unit may be turned off due to the operation of protection system.

1. Evaporate temperature is more than 4℃ in max. frequency operation under ※1the cooling rated conditions.
2. In case of hot water supply, condense temperature is less than 58℃ in max. frequency operation with the outside temperature 7℃D.B./6℃W.B.

※1. Outdoor: 35℃D.B./24℃W.B.

(3) Heat exchanger internal capacity

Heat exchanger internal capacity must be within the capacity range shown below. If the heat exchanger below the minimum capacity is connected, it may result in the back flow of liquid or the failure of the compressor.
If the heat exchanger above the maximum capacity is connected, it may result in the deficiency in performance due to lack of refrigerant or overheating of the compressor.
Minimum capacity : 10 × Model capacity [㎤] / Maximum capacity : 30 × Model capacity [㎤]
e.g. When connecting to PUHZ-HRP*100* VHA
Minimum capacity : 10 × *100* =1000 ㎤
Maximum capacity : 30 × *100* =3000 ㎤

Model capacity	35	50	60	71	100	125	140	200	250
Maximum capacity [㎤]	1050	1500	1800	2130	3000	3750	4200	6000	7500
Minimum capacity [㎤]	350	500	600	710	1000	1250	1400	2000	2500

(4) Contamination maintenance

1. Wash the inside of heat exchanger to keep it clean. Be sure to rince not to leave flux. Do not use chlorine detergent when washing.
2. Be sure that the amount of contamination per unit cubic content of heat transfer pipe is less than the following amount.
   Example) In case of ϕ9.52mm
   Residual water : 0.6㎎/m, Residual oil : 0.5㎎/m, Solid foreign object : 1.8㎎/m

Thermistor position

Refer to 4.2.

Note

· Install the hydraulic filter at the water intake.
· Use the inlet water of higher than 5 ˚C and lower than 55 ˚C.
· The water in a system should be clean and with pH value of 6.5-8.0.
· The followings are the maximum values;
  Calcium : 100mg/L
  Chlorine : 100mg/L
  Iron/manganese : 0.5mg/L
· Refrigerant pipe diameter from outdoor unit to refrigerant-water HEX (Only for SPLIT type)
  Use the pipe with same diameter size as the refrigerant pipe connection diameter of outdoor unit.(Refer to outdoor unit installation manual.)
· Make sure to perform the frozen prevention measure for water pipe system.
  The “5-6(IN3)” terminal on TB142 is for “Forced Comp. OFF” function as the EXTERNAL INPUT(Contact signal).
  To input the abnormal signal of water pump or the abnormal lowering of water flow amount with non-voltage contact signal makes the outdoor unit stop forcibly. For details, refer to 4.5.1.
· The water velocity in pipes should be kept within certain limits of material to avoid erosion,corrosion and excessive noise generation.
  Be aware, and take care of , that local velocities in small pipes, bends and similar obstructions can exceed the values above.
  e.g.) Copper : 1.5m/s

⚠ Warning

· Use clean enough water which meets water quality standards. The deterioration of water quality may result in the system breakdown or the water leakage.
· Never use anything other than water as a medium. It may cause a fire or an explosion.
· Do not use heated or cooled water that is produced by the air to water heat pump directly for drinking or cooking. There is a risk to damage your health. There is also a risk that installing the water heat exchanger may corrode if the necessary water quality for air to water heat pump system cannot be maintained. If you wish to use the heated or cooled water from the heated pump for these purposes, take measure such as to the second heat exchanger within the water piping system.

This product is designed and intended for use in the residential, commercial and light-industrial environment.

The product at hand is based on the following EU regulations:

- Low Voltage Directive 2006/95/EC
- Electromagnetic Compatibility Directive 2004/108/EC

Please be sure to put the contact address/telephone number on this manual before handing it to the customer.

MITSUBISHI ELECTRIC CORPORATION
HEAD OFFICE: TOKYO BLDG., 2-7-3, MARUNOUCHI, CHIYODA-KU, TOKYO 100-8310, JAPAN

RG79D405H01

Printed in JAPAN