MITSUBISHI ELECTRIC

Air Handling Unit Controller

CE

PAC-AH10A-G

GB

FOR INSTALLER

INSTALLATION MANUAL

For safe and correct use, please read this installation manual thoroughly before installing the controller.

2

[Fig. 2.0.1]

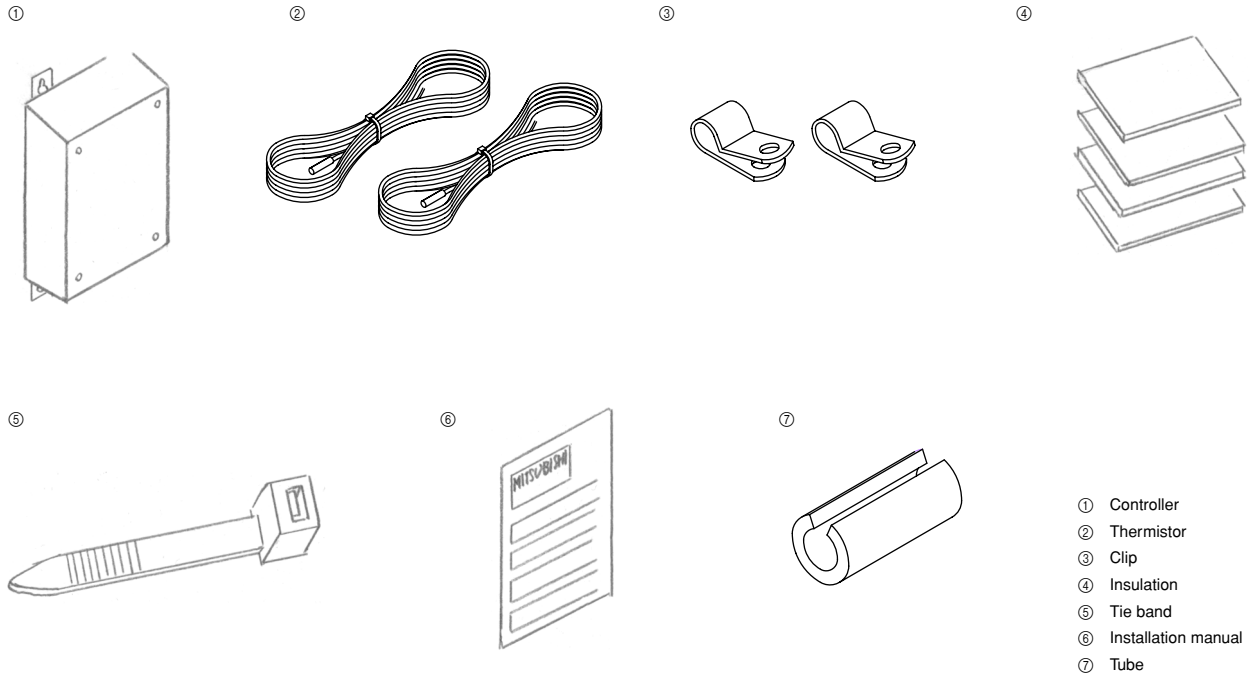

① Controller
② Thermistor
③ Clip
④ Insulation
⑤ Tie band
⑥ Installation manual
⑦ Tube

3

[Fig. 3.0.1]

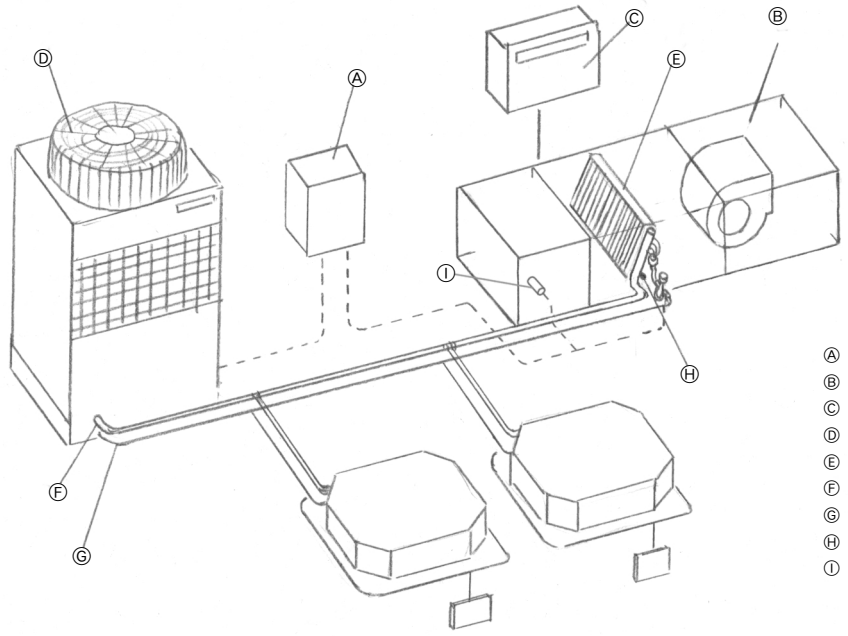

Ⓐ Air handling unit controller (PAC-AH10A-G)
Ⓑ Air handling unit (field supply)
Ⓒ Controller (field supply)
Ⓓ Outdoor unit
Ⓔ Evaporator (field supply)
Ⓕ Gas pipe
Ⓖ Liquid pipe
Ⓗ Thermistor (liquid pipe)
Ⓘ Thermistor (inlet air)

4

[Fig. 4.2.1]

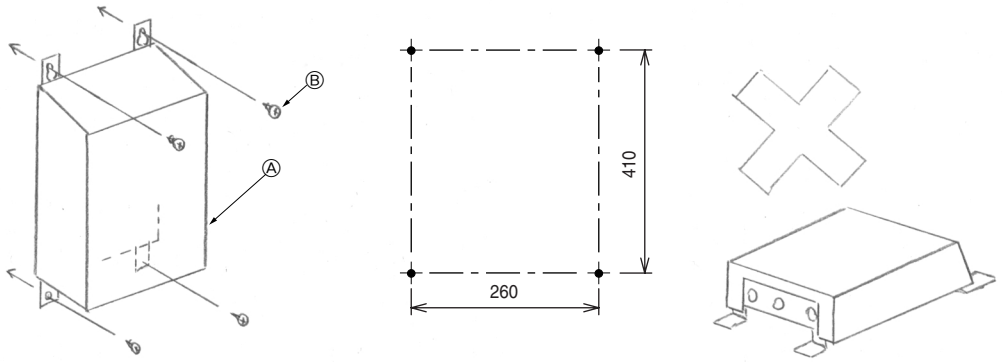

Ⓐ Controller
Ⓑ Screw (field supply)

6

[Fig. 6.2.1.1]

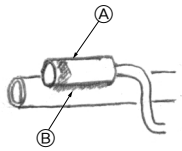

Ⓐ Most sensitive point of the thermistor
Ⓑ Maximize the contact

[Fig. 6.2.1.2]

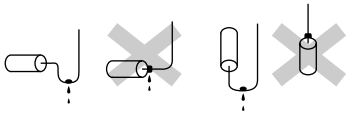

[Fig. 6.2.1.3]

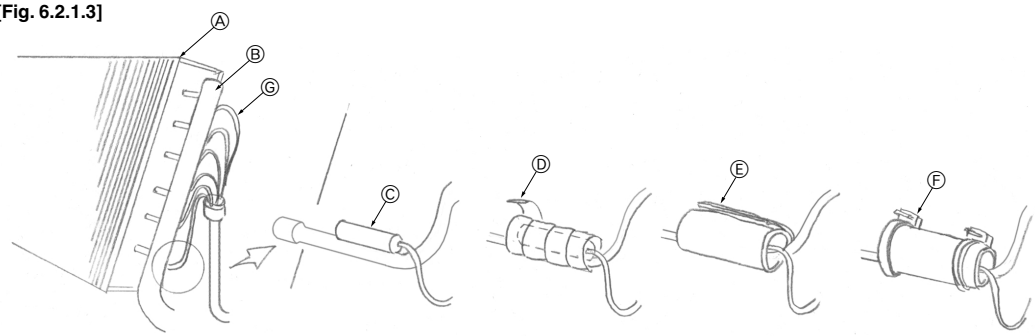

Ⓐ Evaporator (field supply)
Ⓑ Gas pipe
Ⓒ Thermistor (liquid pipe)
Ⓓ Aluminum tape (field supply)
Ⓔ Insulation
Ⓕ Tie band
Ⓖ Capillary tube

[Fig. 6.2.2]

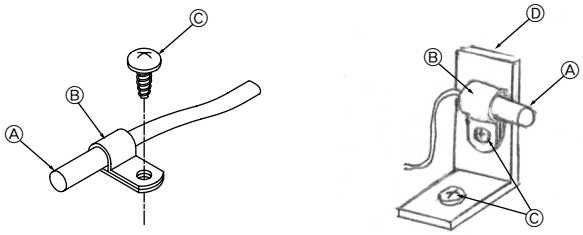

Ⓐ Thermistor (inlet air)
Ⓑ Clip
Ⓒ Screw (field supply)
Ⓓ Plate (field supply)

7

[Fig. 7.0.1]

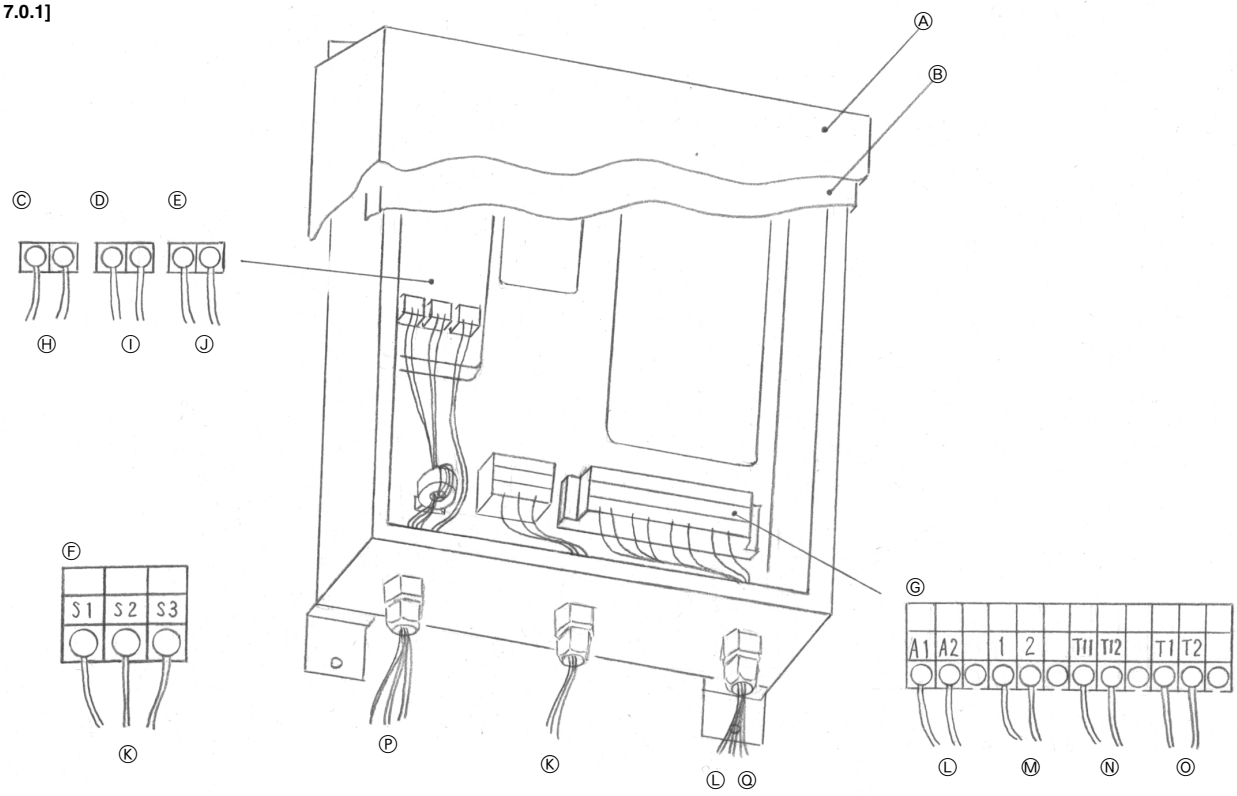

Ⓐ Outer cover
Ⓑ Inner cover
Ⓒ Terminal block TB1
Ⓓ Terminal block TB2
Ⓔ Terminal block TB3
Ⓕ Terminal block TB4
Ⓖ Terminal block TBX
Ⓗ Operation output
Ⓘ Error output
Ⓙ Distant ON/OFF signal (Pulse)
Ⓚ Transmission
Ⓛ Distant ON/OFF signal (Level)
Ⓜ To remote controller
Ⓝ Thermistor (liquid pipe)
Ⓞ Thermistor (inlet air)
Ⓟ Distant signal
Ⓠ Thermistor · Remote controller

7

7.1

[Fig. 7.1.1]

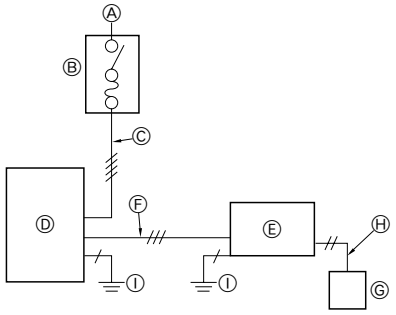

Ⓐ Power supply
Ⓑ Main switch/fuse (purchased locally)
Ⓒ Power supply wiring for outdoor unit
Ⓓ Outdoor unit
Ⓔ AHU controller
Ⓕ Connection wiring for AHU controller/outdoor units (polarity)
Ⓖ Remote controller
Ⓗ Connection wiring for AHU controller/remote controller (no polarity)
Ⓘ Grounding

[Fig. 7.1.2]

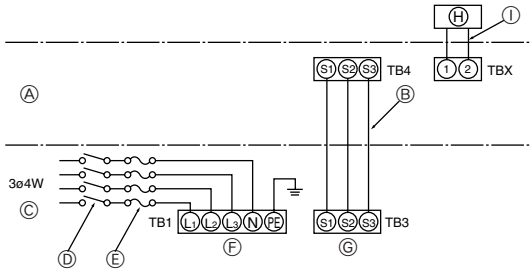

Ⓐ AHU controller
Ⓑ Control cable wiring
Ⓒ Outdoor unit
Ⓓ Breaker (15 A)
Ⓔ Fuse (15 A)
Ⓕ Power cable terminal bed
Ⓖ Control cable terminal bed
Ⓗ Remote controller
Ⓘ Remote controller cable wiring

7.4

[Fig. 7.4.1]

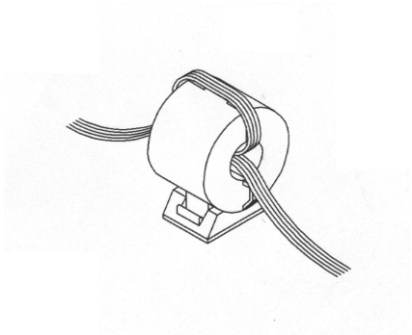

[Fig. 7.4.2]

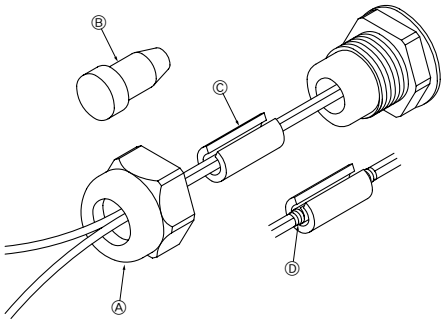

Ⓐ Bunch of wires
Ⓑ Plug
Ⓒ Tube
Ⓓ Insulation tape

8

[Fig. 8.1.1]

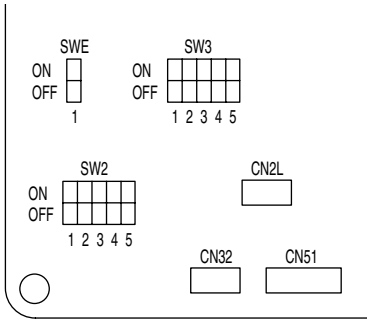

9

[Fig. 9.0.1]

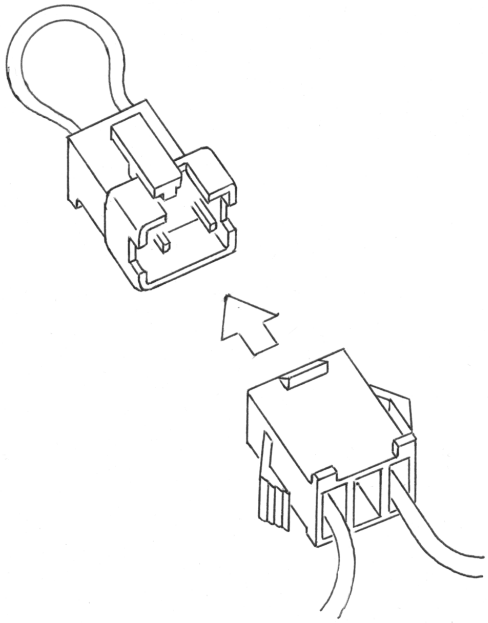

Contents

1. Safety precautions 5
   1.1. Before installation and electric work 5
   1.2. Precautions for devices that use R407C refrigerant 5
   1.3. Before getting installed 6
   1.4. Before getting installed (moved) - electrical work 6
   1.5. Before starting the test run 6
2. Accessories 6
3. System component 6
   3.1. Selection of the evaporator (air handling unit) 6
4. Selecting an installation site and installing the controller 7
   4.1. Combining indoor units with outdoor units 7
   4.2. Installing the controller 7
5. Refrigerant pipe specifications 7
6. Connecting refrigerant pipes 7
   6.1. Refrigerant piping work 7
   6.2. Thermistor setting work 7
7. Electrical wiring 8
   7.1. Connecting control cables 8
   7.2. Connecting remote controller cables 8
   7.3. Connecting thermistor cables 8
   7.4. Connecting distant signal line 9
8. Setting switches 9
   8.1. Setting unit size 9
   8.2. Cooling only 9
9. Initial setting and test run 9

1. Safety precautions

1.1. Before installation and electric work

- ▶ **Before installing the unit, make sure you read all the "Safety precautions".**
- ▶ **The "Safety precautions" provide very important points regarding safety. Make sure you follow them.**

Symbols used in the text

⚠ Warning:
Describes precautions that should be observed to prevent danger of injury or death to the user.

⚠ Caution:
Describes precautions that should be observed to prevent damage to the unit.

Symbols used in the illustrations

⃠ : Indicates an action that must be avoided.

❗ : Indicates that important instructions must be followed.

⏚ : Indicates a part which must be grounded.

: Indicates that caution should be taken with rotating parts. (This symbol is displayed on the main unit label.) <Color: yellow>

: Beware of electric shock (This symbol is displayed on the main unit label.) <Color: yellow>

⚠ Warning:
Carefully read the labels affixed to the main unit.

⚠ Warning:

- **Ask the dealer or an authorized technician to install the controller.**
  - Improper installation by the user may result in water leakage, electric shock, or fire.
- **Use the specified cables for wiring. Make the connections securely so that the outside force of the cable is not applied to the terminals.**
  - Inadequate connection and fastening may generate heat and cause a fire.
- **Prepare for typhoons and other strong winds and earthquakes and install the unit at the specified place.**
  - Improper installation may cause the unit to topple and result in injury.
- **Never repair the unit. If the controller must be repaired, consult the dealer.**
  - If the unit is repaired improperly, electric shock, or fire may result.
- **When handling this product, always wear protective equipment. EG: Gloves, full arm protection namely boiler suit, and safety glasses.**
  - Improper handling may result in injury.
- **If refrigerant gas leaks during installation work, ventilate the room.**
  - If the refrigerant gas comes into contact with a flame, poisonous gases will be released.
- **Install the controller according to this Installation Manual.**
  - If the unit is installed improperly, electric shock, or fire may result.
- **Have all electric work done by a licensed electrician according to "Electric Facility Engineering Standard" and "Interior Wire Regulations"and the instructions given in this manual and always use a special circuit.**
  - If the power source capacity is inadequate or electric work is performed improperly, electric shock and fire may result.
- **Keep the electric parts away from water (washing water etc.).**
  - It might result in electric shock, catching fire or smoke.
- **Securely install the outdoor unit terminal cover (panel).**
  - If the terminal cover (panel) is not installed properly, dust or water may enter the outdoor unit and fire or electric shock may result.
- **When installing and moving the air handling unit to another site, do not charge the it with a refrigerant different from the refrigerant specified on the unit.**
  - If a different refrigerant or air is mixed with the original refrigerant, the refrigerant cycle may malfunction and the unit may be damaged.
- **If the air handling unit is installed in a small room, measures must be taken to prevent the refrigerant concentration from exceeding the safety limit even if the refrigerant should leak.**
  - Consult the dealer regarding the appropriate measures to prevent the safety limit from being exceeded. Should the refrigerant leak and cause the safety limit to be exceeded, hazards due to lack of oxygen in the room could result.
- **When moving and reinstalling the air handling unit, consult the dealer or an authorized technician.**
  - If the controller is installed improperly, electric shock, or fire may result.
- **After completing installation work, make sure that refrigerant gas is not leaking.**
  - If the refrigerant gas leaks and is exposed to a fan heater, stove, oven, or other heat source, it may generate noxious gases.
- **Do not reconstruct or change the settings of the protection devices.**
  - If the pressure switch, thermal switch, or other protection device is shorted and operated forcibly, or parts other than those specified by Mitsubishi Electric are used, fire or explosion may result.
- **To dispose of this product, consult your dealer.**
- **Do not use a leak detection additive.**

1.2. Precautions for devices that use R407C refrigerant

⚠ Caution:

- **Do not use the existing refrigerant piping.**
  - The old refrigerant and refrigerator oil in the existing piping contains a large amount of chlorine which may cause the refrigerator oil of the new unit to deteriorate.
- **Use refrigerant piping made of C1220 (Cu-DHP) phosphorus deoxidized copper as specified in the JIS H3300 "Copper and copper alloy seamless pipes and tubes". In addition, be sure that the inner and outer surfaces of the pipes are clean and free of hazardous sulphur, oxides, dust/dirt, shaving particles, oils, moisture, or any other contaminant.**
  - Contaminants on the inside of the refrigerant piping may cause the refrigerant residual oil to deteriorate.
- **Store the piping to be used during installation indoors and keep both ends of the piping sealed until just before brazing. (Store elbows and other joints in a plastic bag.)**
  - If dust, dirt, or water enters the refrigerant cycle, deterioration of the oil and compressor trouble may result.
- **Use ester oil, ether oil or alkylbenzene (small amount) as the refrigerator oil to coat flares and flange connections.**
  - The refrigerator oil will degrade if it is mixed with a large amount of mineral oil.
- **Use liquid refrigerant to fill the system.**
  - If gas refrigerant is used to seal the system, the composition of the refrigerant in the cylinder will change and performance may drop.
- **Do not use a refrigerant other than R407C.**
  - If another refrigerant (R22, etc.) is used, the chlorine in the refrigerant may cause the refrigerator oil to deteriorate.
- **Use a vacuum pump with a reverse flow check valve.**
  - The vacuum pump oil may flow back into the refrigerant cycle and cause the refrigerator oil to deteriorate.
- **Do not use the following tools that are used with conventional refrigerants.**
  (Gauge manifold, charge hose, gas leak detector, reverse flow check valve, refrigerant charge base, vacuum gauge, refrigerant recovery equipment.)
  - If the conventional refrigerant and refrigerator oil are mixed in the R407C, the refrigerant may deteriorated.

GB

- If water is mixed in the R407C, the refrigerator oil may deteriorate.
- Since R407C does not contain any chlorine, gas leak detectors for conventional refrigerants will not react to it.

- **Do not use a charging cylinder.**
  - Using a charging cylinder may cause the refrigerant to deteriorate.
- **Be especially careful when managing the tools.**
  - If dust, dirt, or water gets in the refrigerant cycle, the refrigerant may deteriorate.

1.3. Before getting installed

⚠ Caution:

- **Do not install the unit where combustible gas may leak.**
  - If the gas leaks and accumulates around the unit, an explosion may result.
- **Do not use the air conditioner where food, pets, plants, precision instruments, or artwork are kept.**
  - The quality of the food, etc. may deteriorate.
- **Do not use the air conditioner in special environments.**
  - Oil, steam, sulfuric smoke, etc. can significantly reduce the performance of the air conditioner or damage its parts.
- **When installing the unit in a hospital, communication station, or similar place, provide sufficient protection against noise.**
  - The inverter equipment, private power generator, high-frequency medical equipment, or radio communication equipment may cause the air conditioner to operate erroneously, or fail to operate. On the other hand, the air conditioner may affect such equipment by creating noise that disturbs medical treatment or image broadcasting.
- **Do not install the unit on a structure that may cause leakage.**
  - When the room humidity exceeds 80 % or when the drain pipe is clogged, condensation may drip from the indoor unit. Perform collective drainage work together with the outdoor unit, as required.

1.4. Before getting installed (moved) - electrical work

⚠ Caution:

- **Ground the unit.**
  - Do not connect the ground wire to gas or water pipes, lightning rods, or telephone ground lines. Improper grounding may result in electric shock.
- **Install the power cable so that tension is not applied to the cable.**
  - Tension may cause the cable to break and generate heat and cause a fire.
- **Install an leak circuit breaker, as required.**
  - If an leak circuit breaker is not installed, electric shock may result.
- **Use power line cables of sufficient current carrying capacity and rating.**
  - Cables that are too small may leak, generate heat, and cause a fire.
- **Use only a circuit breaker and fuse of the specified capacity.**
  - A fuse or circuit breaker of a larger capacity or a steel or copper wire may result in a general unit failure or fire.
- **Do not wash the air conditioner units.**
  - Washing them may cause an electric shock.
- **Be careful that the installation base is not damaged by long use.**
  - If the damage is left uncorrected, the unit may fall and cause personal injury or property damage.
- **Be very careful about product transportation.**
  - Only one person should not carry the product if it weighs more than 20 kg.
  - Some products use PP bands for packaging. Do not use any PP bands for a means of transportation. It is dangerous.
  - Do not touch the heat exchanger fins. Doing so may cut your fingers.
  - When transporting the outdoor unit, suspend it at the specified positions on the unit base. Also support the outdoor unit at four points so that it cannot slip sideways.
- **Safely dispose of the packing materials.**
  - Packing materials, such as nails and other metal or wooden parts, may cause stabs or other injuries.
  - Tear apart and throw away plastic packaging bags so that children will not play with them. If children play with a plastic bag which was not torn apart, they face the risk of suffocation.

1.5. Before starting the test run

⚠ Caution:

- **Turn on the power at least 12 hours before starting operation.**
  - Starting operation immediately after turning on the main power switch can result in severe damage to internal parts. Keep the power switch turned on during the operational season.
- **Do not touch the switches with wet fingers.**
  - Touching a switch with wet fingers can cause electric shock.
- **Do not touch the refrigerant pipes during and immediately after operation.**
  - During and immediately after operation, the refrigerant pipes are may be hot and may be cold, depending on the condition of the refrigerant flowing through the refrigerant piping, compressor, and other refrigerant cycle parts. Your hands may suffer burns or frostbite if you touch the refrigerant pipes.
- **Do not operate the air conditioner with the panels and guards removed.**
  - Rotating, hot, or high-voltage parts can cause injuries.
- **Do not turn off the power immediately after stopping operation.**
  - Always wait at least five minutes before turning off the power. Otherwise, water leakage and trouble may occur.

2. Accessories

The unit is provided with the following accessories:

[Fig. 2.0.1] (P. 2)

No.	Accessories	Quantity
①	Controller	1
②	Thermistor	2
③	Clip (1 spare)	2
④	Insulation (2 spares)	4
⑤	Tie band (2 spares)	6
⑥	Installation manual	1
⑦	Tube	3

3. System component

[Fig. 3.0.1] (P. 2)

Ⓐ Air handling unit controller (PAC-AH10A-G)
Ⓑ Air handling unit (field supply)
Ⓒ Controller (field supply)
Ⓓ Outdoor unit
Ⓔ Evaporator (field supply)
Ⓕ Gas pipe
Ⓖ Liquid pipe
Ⓗ Thermistor (liquid pipe)
Ⓘ Thermistor (inlet air)

3.1. Selection of the evaporator (air handling unit)

3.1.1 Compressive strength

The design pressure of this system is 3.3MPa. The compressive strength of the evaporator and of other pipes must exceed 9.9MPa (=3.3 × 3).

3.1.2 Contamination control

Control the contamination to keep proper quality of the models using HFC refrigerant.

3.1.3 Specifications of the evaporator

Select the evaporator (field supply) according to the table below.

⚠ Caution:

If not, malfunction of the outdoor unit may be caused.

Type	Unit size (Air handling unit)	Allowed evaporator capacity	Allowed evaporator volume	Standard evaporator path number*
PAC-AH10A-G	P8	15.5 ~ 25.0 kW	3000 ~ 5700 cm³	10 ~ 12
	P10	19.5 ~ 30.0 kW	3750 ~ 7100 cm³	10 ~ 12

Saturated refrigerant temperature at exit of evaporator = 7.5 °C, SH=5K, liquid temperature = 48 °C, air = 27 °CDB/19 °CWB

* When the diameter of the heat exchanger tube is ø9.52.

⚠ Caution:

The evaporator must be used within the following temperature range.
Inlet air temperature range of the air handling unit: 15-24˚CWB (cooling only).

GB

4. Selecting an installation site and installing the controller

- Avoid locations in direct sunlight.
- Avoid locations exposed to stream or oil vapour.
- Avoid locations where combustible gas may leak, settle or be generated.
- Avoid installation near machines emitting high-frequency waves.
- Avoid places where acidic solutions are frequently handled.
- Avoid places where sulphur-based or other sprays are frequently used.

4.1. Combining indoor units with outdoor units

For combining indoor units with outdoor units, refer to the outdoor unit installation manual.

4.2. Installing the controller

[Fig. 4.2.1] (P.2)

Ⓐ Controller Ⓑ Screw (field supply)

When mounting the controller, use 4 supplied controller mounting screws, and mount it vertically.

⚠ Warning:

Do not mount the horizontally laid controller.

5. Refrigerant pipe specifications

To avoid dew drops, provide sufficient antisweating and insulating work to the refrigerant and drain pipes.
When using commercially available refrigerant pipes, be sure to wind commercially available insulating material (with a heat-resisting temperature of more than 100 °C and thickness given below) onto both liquid and gas pipes.
Be also sure to wind commercially available insulating material (with a form polyethylene's specific gravity of 0.03 and thickness given below) onto all pipes which pass through rooms.

① Select the thickness of insulating material by pipe size.

Pipe size	Insulating material's thickness
6.4 mm to 25.4 mm	More than 10 mm
28.6 mm to 38.1 mm	More than 15 mm

② If the unit is used on the highest story of a building and under conditions of high temperature and humidity, it is necessary to use pipe size and insulating material's thickness more than those given in the table above.

③ If there are customer's specifications, simply follow them.

GB

6. Connecting refrigerant pipes

6.1. Refrigerant piping work

This piping work must be done in accordance with the installation manuals for outdoor unit.

- For constraints on pipe length and allowable difference of elevation, refer to the outdoor unit manual.

Cautions On Refrigerant Piping

- ▶ **Be sure to use non-oxidative brazing for brazing to ensure that no foreign matter or moisture enter into the pipe.**
- ▶ **Be sure to apply refrigerating machine oil over the flare connection seating surface and tighten the connection using a double spanner.**
- ▶ **Provide a metal brace to support the refrigerant pipe so that no load is imparted to the indoor unit end pipe. This metal brace should be provided 50 cm away from the indoor unit's flare connection.**

⚠ Warning:

When installing and moving the unit, do not charge it with refrigerant other than the refrigerant specified on the unit.

- Mixing of a different refrigerant, air, etc. may cause the refrigerant cycle to malfunction and result in severe damage.

⚠ Caution:

- **Use refrigerant piping made of C1220 (Cu-DHP) phosphorus deoxidized copper as specified in the JIS H3300 "Copper and copper alloy seamless pipes and tubes". In addition, be sure that the inner and outer surfaces of the pipes are clean and free of hazardous sulphur, oxides, dust/dirt, shaving particles, oils, moisture, or any other contaminant.**
- **Never use existing refrigerant piping.**
  - The large amount of chlorine in conventional refrigerant and refrigerator oil in the existing piping will cause the new refrigerant to deteriorate.
- **Store the piping to be used during installation indoors and keep both ends of the piping sealed until just before brazing.**
  - If dust, dirt, or water gets into the refrigerant cycle, the oil will deteriorate and the compressor may fail.
- **Use Suniso 4GS or 3GS (small amount) refrigerator oil to coat the flare and flange connection part. (For models using R22)**
- **Use ester oil, ether oil or alkylbenzene (small amount) as the refrigerator oil to coat flares and flange connections. (For models using R410A or R407C)**
  - The refrigerant used in the unit is highly hygroscopic and mixes with water and will degrade the refrigerator oil.

6.2. Thermistor setting work

6.2.1 Thermistor for liquid pipe

⚠ Caution:

The evaporator and the thermistor must touch each other. The top of the most sensitive part of the thermistor must touch the evaporator.

[Fig. 6.2.1.1] (P.3)

Ⓐ Most sensitive point of the thermistor
Ⓑ Maximize the contact

⚠ Caution:

Put the thermistor wire slightly down to avoid water accumulation on top of the thermistor.

[Fig. 6.2.1.2] (P.3)

Turn the lead wire of the thermistor downward, and wind the aluminium tape (field supply) around the pipe to fix the thermistor.
Wind the insulation material over it.
Tighten the top and bottom of the insulation material using the supplied tie band.
Fold the lead wire of the thermistor, and fix it with the insulation material using the tie band.

[Fig. 6.2.1.3] (P.3)

Ⓐ Evaporator (field supply) Ⓑ Gas pipe
Ⓒ Thermistor (liquid pipe) Ⓓ Aluminum tape (field supply)
Ⓔ Insulation Ⓕ Tie band
Ⓖ Capillary tube

6.2.2 Thermistor for inlet air

Attach the thermistor where the inlet air temperature of the air handling unit can be detected.

[Fig. 6.2.2] (P.3)

Ⓐ Thermistor (inlet air) Ⓑ Clip
Ⓒ Screw (field supply) Ⓓ Plate (field supply)

7. Electrical wiring

Precautions on electrical wiring

⚠ Warning:

Electrical work should be done by qualified electrical engineers in accordance with "Engineering Standards For Electrical Installation" and supplied installation manuals. Special circuits should also be used. If the power circuit lacks capacity or has an installation failure, it may cause a risk of electric shock or fire.

1. Be sure to take power from the special branch circuit.
2. Be sure to install an earth leakage breaker to the power.
3. Install the unit to prevent that any of the control circuit cables (remote controller, transmission cables) is brought in direct contact with the power cable outside the unit.
4. Ensure that there is no slack on all wire connections.
5. Some cables (power, remote controller, transmission cables) above the ceiling may be bitten by mouses. Use as many metal pipes as possible to insert the cables into them for protection.
6. Never connect the power cable to leads for the transmission cables. Otherwise the cables would be broken.
7. Be sure to connect control cables to the indoor unit, remote controller, and the outdoor unit.
8. Put the unit to the ground on the outdoor unit side.
9. Be sure to connect between the control cable terminal block of the outdoor unit and that of the indoor unit. (Cables have polarity, so make sure that they are connected according to the terminal numbers.)

In case of A-control wiring there is high voltage potential on the S3 terminal caused by electrical circuit design that has no electrical insulation between power line and communication signal line. Therefore, please turn off the main power supply when servicing. And do not touch the S1, S2, S3 terminals when the power is energized. If isolator should be used between indoor unit and outdoor unit, please use 3-potes type.

⚠ Caution:

Be sure to put the unit to the ground on the outdoor unit side. Do not connect the earth cable to any gas pipe, water pipe, lightening rod, or telephone earth cable. Incomplete grounding may cause a risk of electric shock.

Connecting wiring

[Fig. 7.0.1] (P.3)

- Ⓐ Outer cover
- Ⓑ Inner cover
- Ⓒ Terminal block TB1
- Ⓓ Terminal block TB2
- Ⓔ Terminal block TB3
- Ⓕ Terminal block TB4
- Ⓖ Terminal block TBX
- Ⓗ Operation output
- Ⓘ Error output
- Ⓙ Distant ON/OFF signal (Pulse)
- Ⓚ Transmission
- Ⓛ Distant ON/OFF signal (Level)
- Ⓜ To remote controller
- Ⓝ Thermistor (liquid pipe)
- Ⓞ Thermistor (inlet air)
- Ⓟ Distant signal
- Ⓠ Thermistor · Remote controller

7.1. Connecting control cables

Control cable size: cable or wire of 0.8 mm² or thicker (12VDC)

[Fig. 7.1.1] (P. 4)

- Ⓐ Power supply
- Ⓑ Main switch/fuse (purchased locally)
- Ⓒ Power supply wiring for outdoor unit
- Ⓓ Power supply wiring for indoor unit
- Ⓔ Outdoor unit
- Ⓕ AHU controller
- Ⓖ Connection wiring for AHU controller/outdoor units (polarity)
- Ⓗ Remote controller
- Ⓘ Connection wiring for AHU controller/remote controller (no polarity)
- Ⓙ Grounding

[Fig. 7.1.2] (P. 4)

- Ⓐ AHU controller
- Ⓑ Control cable wiring
- Ⓒ Outdoor unit
- Ⓓ Breaker (15 A)
- Ⓔ Fuse (15 A)
- Ⓕ Power cable terminal bed
- Ⓖ Control cable terminal bed
- Ⓗ Remote controller
- Ⓘ Remote controller cable wiring

[Selecting non-fuse breaker (NF) or earth leakage breaker (NV)]
To select NF or NV instead of a combination of Class B fuse with switch, use the following:

- In the case of Class B fuse rated 15 A or 20 A,
  NF model name (MITSUBISHI): NF30-CS (15 A) (20 A)
  NV model name (MITSUBISHI): NV30-CA (15 A) (20 A)

Use an earth leakage breaker with a sensitivity of less than 30 mA 0.1 s.

- The connection wiring between the outdoor unit and AHU controller can be extended up to a maximum of 50 m, and the total extension including the crossover wiring between rooms is a maximum of 80 m.

⚠ Caution:

Do not use anything other than the correct capacity breaker and fuse. Using fuse, wire or copper wire with too large capacity may cause a risk of malfunction or fire.

7.2. Connecting remote controller cables

(Remote controller is optionally available.)

- Install a remote controller following the manual supplied with the remote controller.
- Connect the "1" and "2" on AHU controller TBX to a MA remote controller. (Non-polarized 2-wire)
- Connect the remote controller's transmission cable within 10 m using a 0.75 mm² core cable. If the distance is more than 10 m, use a 1.25 mm² junction cable.
- DC 9 to 13 V between 1 and 2 (MA remote controller)

Note:
Ensure that the wiring is not pinched when fitting the terminal box cover. Pinching the wiring may cut it.

⚠ Caution:

Install wiring so that it is not tight and under tension. Wiring under tension may break, or overheat and burn.

- Fix power source wiring to control box by using buffer bushing for tensile force. (PG connection or the like.) Connect transmission wiring to transmission terminal block through the knockout hole of control box using ordinary bushing.
- After wiring is complete, make sure again that there is no slack on the connections, and attach the cover onto the control box in the reverse order removal.

⚠ Caution:

Wire the power supply so that no tension is imparted. Otherwise disconnection, heating or fire result.

7.3. Connecting thermistor cables

Pull the end of the wire through the bunch of wires (Thermistor) at the bottom of the controller.
Connect the thermistor for the inlet air to T1 and T2 on the terminal block, the thermistor on the liquid pipe to T11 and T12.
When the lead wire is too long, cut it to the appropriate length. Do not bind it in the box.
Take proper measures not to miswire. E.g. Attach a label before the cutting part, so that it is obvious whether the wire is for inlet air or for liquid pipe.

⚠ Caution:

Do not route the thermistor cables together with power cables.

GB

7.4. Connecting distant signal line

Pull the wires for operation command, for operation signal and for error signal through the bunch of wires (Distant signal) at the bottom of the controller.
Connect each wire to operation command (level maneuvering): A1 and A2, to operation signal: TB1 and to error signal: TB2.

Item	Connection circuit (on-site circuit)
Operation command	A1, A2, SW1, Maximum 10 m SW1: Minimum applicable load DC12 V, 1 mA
	A1, A2, X, Maximum 10 m Relay power source, X, SW2 X: Minimum applicable load DC12 V, 1 mA
Operation signal	TB1, L1 L1: Operation display lamp Display power source: DC30 V, 1 A AC100 V/200 V, 1 A
Error signal	TB2, L2 L2: Error display lamp Display power source: DC30 V, 1 A AC100 V/200 V, 1 A

Notes:

- **Lead the wire for operation signal and error signal through the ferrite core inside the controller, and wrap the wire once around the core as shown in the figure, and connect the wire.**
  [Fig. 7.4.1] (P. 4)
- **After connecting each wire to the terminal, tighten each nut tightly through which the wire runs.**
- **Check that the bunch of wires do not come off even if they are pulled strongly.**

⚠ Caution:

- **After the wiring work is completed, mount the inner cover first and then the outer cover.**
- **Tighten the screws tightly. (If not, drop of water may enter, leading to malfunction.)**
- **Operation signal cables and Error signal cables and Operation command cables must be routed in a distance of at least 20 cm from all other cables.**
- **When Operation signal, Error signal and Distant signal are taken out, remove the plug inside the bunch of wires.**
- **Wind the supplied tube around the wire according to the size and number of the wire.**
- **If the wire comes off the tightly tightened bunch of wires, wind the insulation tape around the wire to make the wire thicker.**
  [Fig. 7.4.2] (P. 4)
  - Ⓐ Bunch of wires
  - Ⓑ Plug
  - Ⓒ Tube
  - Ⓓ Insulation tape

GB

8. Setting switches

8.1. Setting unit size

Set the unit size according to the evaporator type (field supply).
Set the dip switch (SW2) on the control board in accordance with the chart below.

Type	Unit size (Air handling unit)	Allowed evaporator capacity	Setting switches (SW2)*
PAC-AH10A-G	P8	15.5 ~ 25.0 kW	1 2 3 4 5 ON OFF
	P10	19.5 ~ 30.0 kW	1 2 3 4 5 ON OFF

* ■ indicates ON/OFF state.
[Fig. 8.1.1] (P. 4)

8.2. Cooling only

The dip switch (SW5-3) on the control board of the outdoor unit must be set to ON, and must be used only in the cooling mode.

⚠ Caution:

Using the switch in the heating mode may cause malfunction.

9. Initial setting and test run

After the installation work, which was performed in accordance with the outdoor unit installation manual, and after the AHU refrigerant piping work, drain piping work, electrical wiring work, AHU controller wiring work, and switch setting, turn on the main power at least 12 hours before starting operation in accordance with the outdoor unit installation manual.

- Test run

① Start the fan of AHU.
② Close the contact A1/A2 (close: ON, open: OFF)
③ Check that cool air blows.
④ Open the contact A1/A2.
⑤ Stop the fan of AHU.

When the remote controller is used, remove the switch connector inside the controller.
[Fig. 9.0.1] (P. 4)

Notes:
After 16-minute or more cooling operation, and when 1 °C or less of the thermistor detection temperature for liquid pipe is detected for 3 minutes in a row, the compressor valve will be stopped to prevent freezing. The operation will be normal when either of the following conditions is met.

- **When 3 minutes have passed after 10 °C or more of the thermistor detection temperature for liquid pipe is detected.**
- **When 6 minutes have passed after the compressor was stopped to prevent freezing.**

This product is designed and intended for use in the residential, commercial and light-industrial environment.

The product at hand is based on the following EU regulations:

- Low Voltage Directive 73/23/EEC
- Electromagnetic Compatibility Directive 89/336/EEC

Please be sure to put the contact address/telephone number on this manual before handing it to the customer.

MITSUBISHI ELECTRIC CORPORATION
HEAD OFFICE: MITSUBISHI DENKI BLDG., 2-2-3, MARUNOUCHI, CHIYODA-KU, TOKYO 100-8310, JAPAN

WT04536X01

Printed in Japan