MITSUBISHI ELECTRIC

CITY MULTI

Air-Conditioners
INDOOR UNIT

CE

PEFY-P15,P20,P25,P32,P40,P50,P63 VMS1-E
PEFY-P15,P20,P25,P32,P40,P50,P63 VMS1L-E

GB

OPERATION MANUAL
For safe and correct use, please read this operation manual thoroughly before operating the air-conditioner unit.

D

BEDIENUNGSHANDBUCH
Zum sicheren und einwandfreien Gebrauch der Klimaanlage dieses Bedienungshandbuch vor Inbetriebnahme gründlich durchlesen.

F

MANUEL D'UTILISATION
Pour une utilisation correcte sans risques, veuillez lire le manuel d'utilisation en entier avant de vous servir du climatiseur.

E

MANUAL DE INSTRUCCIONES
Lea este manual de instrucciones hasta el final antes de poner en marcha la unidad de aire acondicionado para garantizar un uso seguro y correcto.

I

ISTRUZIONI DI FUNZIONAMENTO
Leggere attentamente questi istruzioni di funzionamento prima di avviare l'unità, per un uso corretto e sicuro della stessa.

NL

BEDIENINGSHANDLEIDING
Voor een veilig en juist gebruik moet u deze bedieningshandleiding grondig doorlezen voordat u de airconditioner gebruikt.

P

MANUAL DE OPERAÇÃO
Para segurança e utilização correctas, leia atentamente o manual de operação antes de pôr a funcionar a unidade de ar condicionado.

GR

ΕΓΧΕΙΡΙΔΙΟ ΟΔΗΓΙΩΝ ΧΡΗΣΕΩΣ
Για ασφάλεια και σωστή χρήση, παρακαλείστε διαβάσετε προσεχτικά αυτό το εγχειρίδιο χρήσεως πριν θέσετε σε λειτουργία τη μονάδα κλιματισμού.

RU

РУКОВОДСТВО ПО ЭКСПЛУАТАЦИИ
Для обеспечения правильного и безопасного использования следует ознакомиться с инструкциями, указанными в данном руководстве по эксплуатации, тщательным образом до того, как приступать к использованию кондиционера.

TR

IŞLETME ELKİTABI
Emniyetli ve doğru biçimde nasıl kullanılacağını öğrenmek için lütfen klima cihazını işletmeden önce bu elkitabını dikkatle okuyunuz.

中

操作手册
为了确保安全和正确使用，请在使用空调器之前仔细阅读本操作手册。

CZ

NÁVOD K OBSLUZE
Přečtěte si důkladně tento návod k obsluze před použitím klimatizační jednotky. Budete ji pak moci využívat bezpečně a správně.

SV

NÁVOD NA POUŽITIE
Skôr, než začnete používať klimatizačnú jednotku, prečítajte si dôkladne návod na použitie, aby ste jednotku používali bezpečne a správne.

HG

HASZNÁLATI KÉZIKÖNYV
A megfelelő és biztonságos használat érdekében, kérjük, hogy figyelmesen olvassa el a használati kézikönyvben leírtakat a légkondicionáló berendezés üzembe helyezése előtt.

PO

INSTRUKCJA OBSŁUGI
Przed rozpoczęciem użytkowania klimatyzatora dokładnie przeczytaj niniejszą instrukcję, w celu uzyskania informacji na temat bezpiecznego i prawidłowego korzystania z urządzenia.

SL

UPORABNIŠKI PRIROČNIK
Za varno in pravilno uporabo pred uporabo klimatske naprave pazljivo preberite ta uporabniški priročnik.

(GB) Remote controller-Button
(D) Fernbedienungs-Taste
(F) Touche Commande à distance

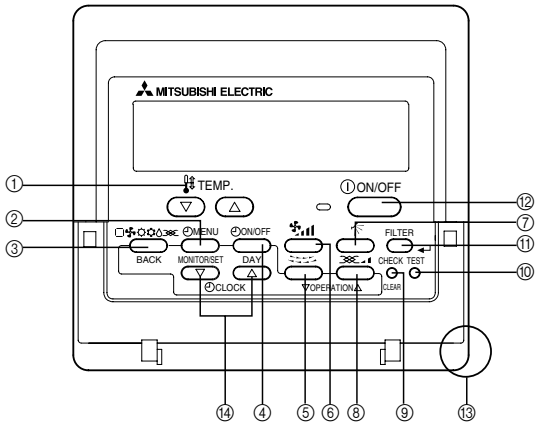

① [Set Temperature] Button
② [Timer Menu] Button
[Monitor/Set] Button
③ [Mode] Button
[Back] Button
④ [Timer On/Off] Button
[Set Day] Button
⑤ [Louver] Button
[Operation] Button
⑥ [Fan Speed] Button
⑦ [Vane Control] Button
⑧ [Ventilation] Button
[Operation] Button
⑨ [Check/Clear] Button
⑩ [Test Run] Button
⑪ [Filter] Button
[↵] Button
⑫ [ON/OFF] Button
⑬ Position of built-in room temperature sensor
⑭ [Set Time] Button

- Never expose the remote controller to direct sunlight. Doing so can result in the erroneous measurement of room temperature.
- Never place any obstacle around the lower right-hand section of the remote controller. Doing so can result in the erroneous measurement of room temperature.

① [Set Temperature]-Taste
② [Timer Menu]-Taste
[Monitor/Set]-Taste
③ [Mode]-Taste
[Back]-Taste
④ [Timer On/Off]-Taste
[Set Day]-Taste
⑤ [Louver]-Taste
[Operation]-Taste
⑥ [Fan Speed]-Taste
⑦ [Vane Control]-Taste
⑧ [Ventilation]-Taste
[Operation]-Taste
⑨ [Check/Clear]-Taste
⑩ [Test Run]-Taste
⑪ [Filter]-Taste
[↵]-Taste
⑫ [ON/OFF]-Taste
⑬ Position des eingebauten Raumtemperatursensors
⑭ [Zeiteinstell]-Tasten

- Die Fernbedienung nicht direkter Sonneneinstrahlung aussetzen. Die Raumtemperatur wird sonst nicht korrekt gemessen.
- Den rechten unteren Teil der Fernbedienung nicht blockieren. Die Raumtemperatur wird sonst nicht korrekt gemessen.

① Touche [Set Temperature] (Réglage de la température)
② Touche [Timer Menu] (Menu de la minuterie)
Touche [Monitor/Set] (Contrôle/réglage)
③ Touche [Mode]
Touche [Back] (Retour en arrière)
④ Touche [Timer On/Off] (Minuterie Marche/Arrêt)
Touche [Set Day] (Réglage du jour)
⑤ Touche [Louver] (Louvre)
Touche [Operation] (Fonctionnement)
⑥ Touche [Fan Speed] (Vitesse du ventilateur)
⑦ Touche [Vane Control] (Commande des ailettes)
⑧ Touche [Ventilation]
Touche [Operation] (Fonctionnement)
⑨ Touche [Check/Clear] (Contrôler/effacer)
⑩ Touche [Test Run] (Essai de fonctionnement)
⑪ Touche [Filter] (Filtre)
Touche [↵]
⑫ Touche [ON/OFF] (Marche/arrêt)
⑬ Position du capteur de température de la pièce intégré
⑭ Touche de [réglage de l'heure]

- Ne jamais laisser la commande à distance en plein soleil sinon les données de température ambiante risquent d'être erronées.
- Ne jamais placer d'obstacle devant la partie inférieure droite de la commande à distance sinon la lecture des températures ne sera pas correcte.

(E) Controlador remoto-Botón
(I) Bottone dell'unità del comando a distanza
(NL) Knop afstandbediening
(P) Botão do controlo remoto

① Botón [Ajuste de la temperatura]
② Ajuste [Menú de temporizador]
Botón [Monitor/ajuste]
③ Botón [Modo]
Botón [Atrás]
④ Botón [Conexión/desconexión de temporizador]
Botón [Ajuste del día]
⑤ Botón [Rejilla]
Botón [Funcionamiento]
⑥ Botón [Velocidad de ventilador]
⑦ Botón [Control de los deflectores]
⑧ Botón [Ventilación]
Botón [Funcionamiento]
⑨ Botón [Comprobar/Borrar]
⑩ Botón [Prueba de funcionamiento]
⑪ Botón [Filtro]
Botón [↵]
⑫ Botón [ON/OFF]
⑬ Posición del sensor de temperatura ambiente incorporado
⑭ Botón [Ajuste de la hora]

- Nunca exponga el mando a distancia a la luz directa del sol. Si lo hace, se producirá una lectura errónea de la temperatura de la habitación.
- Nunca ponga ningún obstáculo alrededor de la sección inferior derecha del mando a distancia. Si lo hace, se producirá una lectura errónea de la temperatura de la habitación.

① Pulsante [Impostazione temperatura]
② Pulsante [Menu timer]
Pulsante [Monitor/Impostazione]
③ Pulsante [Modalità]
Pulsante [Indietro]
④ Pulsante [Timer Attivato/Non attivato]
Pulsante [Impostazione giorno]
⑤ Pulsante [Deflettore]
Pulsante [Funzionamento]
⑥ Pulsante [Velocità di ventilazione]
⑦ Pulsante [Comando lamelle]
⑧ Pulsante [Ventilazione]
Pulsante [Funzionamento]
⑨ Pulsante [Controlla/Cancella]
⑩ Pulsante [Prova di funzionamento]
⑪ Pulsante [Filtro]
Pulsante [↵]
⑫ Pulsante [ACCENSIONE/SPEGNIMENTO]
⑬ Posizione del sensore temperatura ambiente incorporato
⑭ Pulsante [Imposta ora]

- Non esporre mai il comando a distanza alla luce diretta del sole, in quanto questo può alterare la corretta rilevazione della temperatura ambiente.
- Non porre alcun ostacolo attorno alla sezione inferiore destra del comando a distanza, in quanto questo può alterare la corretta rilevazione della temperatura ambiente.

① [Temperatuur instellen]-knop
② [Timermenu]-knop
[Monitor/Instellen]-knop
③ [Modus]-knop
[Terug]-knop
④ [Timer Aan/Uit]-knop
[Datum instellen]-knop
⑤ [Jaloezie]-knop
[Werking]-knop
⑥ [Ventilatorsnelheid]-knop
⑦ [Ventilatorblad regelen]-knop
⑧ [Ventilatie]-knop
[Werking]-knop
⑨ [Invoeren/Wissen]-knop
⑩ [Proefdraaien]-knop
⑪ [Filter]-knop
[↵]-knop
⑫ [ON/OFF (AAN/UIT)]-knop
⑬ Positie van ingebouwde kamertemperatuursensor
⑭ [Tijd instellen]-knop

- Laat de afstandsbediening nooit in direct zonlicht liggen. Als u dit toch doet kan het zijn dat de kamertemperatuur onjuist gemeten wordt.
- Zet of hang nooit iets in de buurt van het gedeelte rechtsonder op de afstandsbediening. Als u dit toch doet kan het zijn dat de kamertemperatuur onjuist gemeten wordt.

① Botão [Set Temperature]
② Botão [Timer Menu]
Botão [Monitor/Set]
③ Botão [Mode]
Botão [Back]
④ Botão [Timer On/Off]
Botão [Set Day]
⑤ Botão [Louver]
Botão [Operation]
⑥ Botão [Fan Speed]
⑦ Botão [Vane Control]
⑧ Botão [Ventilation]
Botão [Operation]
⑨ Botão [Check/Clear]
⑩ Botão [Test Run]
⑪ Botão [Filter]
Botão [↵]
⑫ Botão [ON/OFF]
⑬ Posição do sensor da temperatura ambiente incorporado
⑭ Botão [Set Time]

- Nunca exponha o controlo remoto à luz directa do sol, porque pode dar-lhe valores de temperatura da peça anormais.
- Nunca coloque nenhum obstáculo em volta da secção inferior direita do controlo remoto, pois isso pode dar-lhe valores de temperatura da peça anormais.

(GR) Τηλεχειριστήριο-Κουμπί
(RU) Кнопка контроллера ДУ
(TR) Uzaktan kumanda ünitesi - Düğme
(中) 遥控器-按钮

① Κουμπι [Set Temperature]
② Κουμπι [Timer Menu]
Κουμπι [Monitor/Set]
③ Κουμπι [Mode]
Κουμπι [Back]
④ Κουμπι [Timer On/Off]
Κουμπι [Set Day]
⑤ Κουμπι [Louver]
Κουμπι [Operation]
⑥ Κουμπι [Fan Speed]
⑦ Κουμπι [Vane Control]
⑧ Κουμπι [Ventilation]
Κουμπι [Operation]
⑨ Κουμπι [Check/Clear]
⑩ Κουμπι [Test Run]
⑪ Κουμπι [Filter]
Κουμπι [↵]
⑫ Κουμπι [ON/OFF]
⑬ Θέση του ενσωματωμένου θερμομέτρου δωματίου
⑭ Κουμπί [Ρύθμισης ώρας]

- Μην εκτίθετε ποτέ το χειριστήριο εξ αποστάσεως στο ηλιακό φώς. Αυτό μπορεί να έχει σαν αποτέλεσμα λανθασμένες μετρήσεις της θερμοκρασίας δωματίου.
- Μην τοποθετείτε ποτέ εμπόδια γύρω από το κάτω δεξιό τμήμα το χειριστηρίου εξ αποστάσεως. Αυτό μπορεί να έχει σαν αποτέλεσμα λανθασμένες μετρήσεις της θερμοκρασίας δωματίου.

① Кнопка [Установить температуру]
② Кнопка [Меню реле времени]
Кнопка [Монитор/Установка]
③ Кнопка [Режим]
Кнопка [Назад]
④ Кнопка [Реле времени Вкл./Выкл.]
Кнопка [Установить дату]
⑤ Кнопка [Вентиляционная решетка]
Кнопка [Режим эксплуатации]
⑥ Кнопка [Скорость вентилятора]
⑦ Кнопка [Контроль лопасти]
⑧ Кнопка [Вентиляция]
Кнопка [Режим работы]
⑨ Кнопка [Проверка/Очистка]
⑩ Кнопка [Тестовыи прогон]
⑪ Кнопка [Фильтр]
Кнопка [↵]
⑫ Кнопка [ВКЛ./ВЫКЛ.]
⑬ Позиция встроенного датчика температуры помещения
⑭ Кнопка [Настройка времени]

- Никогда не подвергайте пульт дистанционного управления воздействию прямых солнечных лучей. Это может привести к неправильным замерениям температуры в помещении.
- Никогда не помещайте какое-либо препятствие перед нижней правой секцией пульта дистанционного управления. Это может привести к неправильному замерению температуры в помещении.

① [Sıcaklık Ayarı] Düğmesi
② [Oda Sıcaklığı Ayarı] Düğmesi
[Saat Ayarı] Düğmesi
③ [Program Seçme] Düğmesi
[Geri] Düğmesi
④ [Saatli/Sürekli Çalışma] Düğmesi
[Gün Ayarı] Düğmesi
⑤ [Pancur] Düğmesi
[Program] Düğmesi
⑥ [Vantilatör Hızı Ayarlama] Düğmesi
⑦ [Hava Akımını Aşağı/Yukarı Yönlendirme] Düğmesi
⑧ [Havalandırma] Düğmesi
[Program] Düğmesi
⑨ [Kontrol/Entegre] Düğmesi
⑩ [Deneme Çalışması] Düğmesi
⑪ [Filtre] Düğmesi
[↵] Düğmesi
⑫ [Açma/Kapama] Düğmesi
⑬ Entegre oda sıcaklığı sensörü konumu
⑭ [Saat Ayarı] Düğmesi

- Uzaktan kumanda ünitesini güneş ışığına maruz bırakmayın. Aksi taktirde oda sıcaklığının yanlış ölçülmesine neden olabilirsiniz.
- Uzaktan kumanda ünitesinin sağ alt köşesinin önünü hiçbir şekilde kapatmayın. Aksi taktirde oda sıcaklığının yanlış ölçülmesine neden olabilirsiniz.

① [设置温度]按钮
② [定时器菜单]按钮
[监视器/设置]按钮
③ [模式]按钮
[返回]按钮
④ [定时器开/关]按钮
[设置日期]按钮
⑤ [风向]按钮
[运行]按钮
⑥ [风扇速度]按钮
⑦ [叶片控制]按钮
⑧ [通风]按钮
[运行]按钮
⑨ [校验/清除]按钮
⑩ [试运转]按钮
⑪ [滤网]按钮
[↵]按钮
⑫ [开/关]按钮
⑬ 内置室温传感器位置
⑭ [设置时间]按钮

- 切勿将遥控器暴露在直射阳光下，否则可能会引起室温测量误差。
- 切勿在遥控器右下方放置任可障碍物，否则可能会引起室温测量误差。

(CZ) Tlačítka dálkového ovládání
(SV) Tlačidlá diaľkového ovládača
(HG) Távirányító - Nyomógomb
(PO) Przyciski pilota

① Tlačítko [nastavení teploty]
② Tlačítko [nabídka časovače]
Tlačítko [monitor/nastavení]
③ Tlačítko [režim]
Tlačítko [zpět]
④ Tlačítko [zapnutí/vypnutí časovače]
Tlačítko [nastavení dne]
⑤ Tlačítko [žaluziový větrák]
Tlačítko [režim provozu]
⑥ Tlačítko [rychlost větráku]
⑦ Tlačítko [ovládání lamel]
⑧ Tlačítko [větrání]
Tlačítko [režim provozu]
⑨ Tlačítko [kontrola/vymazat]
⑩ Tlačítko [zkušební provoz]
⑪ Tlačítko [filtr]
Tlačítko [↵]
⑫ Tlačítko [ON/OFF]
Tlačítko [nastavení teploty]
⑬ Umístění zabudovaného snímače pokojové teploty
⑭ Tlačítko [Nastavení času]

- Nikdy dálkové ovládání nevystavujte přímému slunečnímu svitu. Mohlo by to způsobit chybné naměření pokojové teploty.
- Neumisťujte kolem pravé spodní části dálkového ovládání žádné překážky. Mohlo by to způsobit chybné naměření pokojové teploty.

① Tlačidlo [Nastavenie teploty v miestnosti]
② Tlačidlo [Voľba časovača]
Tlačidlo [Nastavenie monitora]
③ Tlačidlo [Voľba činnosti]
Tlačidlo [Späť]
④ Tlačidlo [Časovač zap./vyp.]
Tlačidlo [Nastaviť deň]
⑤ Tlačidlo [Žalúziový vetrák]
Tlačidlo [Ventilácia]
⑥ Tlačidlo [Rýchlosť ventilátora]
⑦ Tlačidlo [Smer prúdu vzduchu]
⑧ Tlačidlo [Ventilácia]
Tlačidlo [Ventilácia]
⑨ Tlačidlo [Kontrolovať/Vymazať]
⑩ Tlačidlo [Testovací chod]
⑪ Tlačidlo [Filter]
Tlačidlo [↵]
⑫ Tlačidlo [ON/OFF]
⑬ Poloha zabudovaného snímača izbovej teploty
⑭ Tlačidlo [Nastavenie času]

- Diaľkový ovládač nikdy nevystavujte priamemu slnečnému žiareniu. V opačnom prípade bude chybne nameraná teplota v miestnosti.
- Okolo pravej spodnej časti diaľkového ovládača nikdy nestavajte žiadne prekážky. V opačnom prípade bude chybne nameraná teplota v miestnosti.

① [Set Temperature] gomb
② [Timer Menu] gomb
[Monitor/Set] gomb
③ [Mode] gomb
[Back] gomb
④ [Timer On/Off] gomb
[Set Day] gomb
⑤ [Louver] gomb
[Operation] gomb
⑥ [Fan Speed] gomb
⑦ [Vane Control] gomb
⑧ [Ventilation] gomb
[Operation] gomb
⑨ [Check/Clear] gomb
⑩ [Test Run] gomb
⑪ [Filter] gomb
[↵] gomb
⑫ [ON/OFF] gomb
⑬ A beépített hőmérsékletérzékelő helye
⑭ [Idő beállítása] gomb

- A távirányítót ne tegye ki közvetlen napfénynek, mert az a helyiség hőmérsékletének hibás mérését eredményezheti.
- Ne helyezzen akadályt a távirányító jobboldali alsó részének környékére, mert az a helyiség hőmérsékletének hibás mérését eredményezheti.

① Przycisk [Ustawianie temperatury]
② Przycisk [Menu programatora]
Przycisk [Monitor/ustawianie]
③ Przycisk [Tryb]
Przycisk [Wstecz]
④ Przycisk [Wł./Wył. programator]
Przycisk [Ustawianie dnia]
⑤ Przycisk [Żaluzje]
Przycisk [Praca]
⑥ Przycisk [Prędkość wentylatora]
⑦ Przycisk [Sterowanie łopatkami]
⑧ Przycisk [Wentylacja]
Przycisk [Praca]
⑨ Przycisk [Sprawdzanie/kasowanie]
⑩ Przycisk [Bieg próbny]
⑪ Przycisk [Filtr]
Przycisk [↵]
⑫ Przycisk [WŁ./WYŁ.]
⑬ Położenie wbudowanego czujnika temperatury pomieszczenia
⑭ Przycisk [Ustawianie zegara]

- Nie wystawiaj pilota na bezpośrednie działanie promieni słonecznych. Może to spowodować nieprawidłowy pomiar temperatury pomieszczenia.
- Nie zasłaniaj dolnej części pilota po prawej stronie. Może to spowodować nieprawidłowy pomiar temperatury pomieszczenia.

① Gumb [Nastavitev temperature]
② Gumb [Meni časovnika]
Gumb [nadzor/nastavitev]
③ Gumb [Način]
Gumb [Nazaj]
④ Gumb [Vklop/izklop časovnika]
Gumb [Nastavitev dneva]
⑤ Gumb [Usmerjevalnik]
Gumb [Delovanje]
⑥ Gumb [Hitrost ventilatorja]
⑦ Gumb [Vpihovanje]
⑧ Gumb [Prezračevanje]
Gumb [Delovanje]
⑨ Gumb [Preveri/briši]
⑩ Gumb [Preskusno delovanje]
⑪ Gumb [Filter]
Gumb [↵]
⑫ Gumb [VKLOP/IZKLOP]
⑬ Položaj vgrajenega tipala temperature prostora
⑭ Gumb [Nastavitev časa]

- Daljinskega upravljalnika nikoli ne izpostavite neposredni sončni svetlobi. V tem primeru lahko pride do nepravilne meritve temperature prostora.
- Okoli spodnjega desnega predela daljinskega upravljalnika nikoli ne pustite nobene ovire. V tem primeru lahko pride do nepravilne meritve temperature prostora.

(GB) Remote controller-Display
(D) Fernbedienung-Anzeige
(F) Affichage Commande à distance

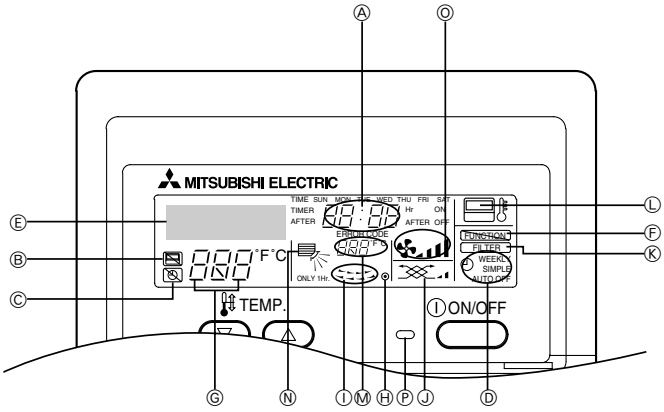

Ⓐ Current time/Timer time
Ⓑ Centralized control indicator
Ⓒ Timer OFF indicator
Ⓓ Timer mode indicator
Ⓔ Operation mode display: COOL, DRY, AUTO, FAN, HEAT
Ⓕ Function mode indicator
Ⓖ Preset temperature
Ⓗ Power indicator
Ⓘ Louver
Ⓙ Ventilation
Ⓚ Filter sign
Ⓛ Sensor position
Ⓜ Room temperature
Ⓝ Vane setting
Ⓞ Fan speed
Ⓟ Operation lamp

Ⓐ Aktuelle Uhrzeit/Timer-Zeit
Ⓑ Anzeige für Zentralsteuerung
Ⓒ Timer-OFF-Anzeige
Ⓓ Anzeige des Timer-Modus
Ⓔ Betriebsartenanzeige: COOL, DRY, AUTO, FAN, HEAT
Ⓕ Anzeige des Funktionsmodus
Ⓖ Voreingestellte Temperatur
Ⓗ Netzanzeige
Ⓘ Luftklappe
Ⓙ Ventilation
Ⓚ Filtersymbol
Ⓛ Sensorposition
Ⓜ Raumtemperatur
Ⓝ Flügeleinstellung
Ⓞ Ventilatorgeschwindigkeit
Ⓟ Betriebsanzeige

Ⓐ Heure réelle/heure de la minuterie
Ⓑ Témoin de commande à distance centralisée
Ⓒ Témoin de minuterie OFF
Ⓓ Témoin de mode de minuterie
Ⓔ Affichage du mode de fonctionnement: COOL, DRY, AUTO, FAN, HEAT (REFROIDISSEMENT, DESHUMIDIFICATION, AUTO, VENTILATEUR, CHAUFFAGE)
Ⓕ Témoin de mode de fonctionnement
Ⓖ Température prédéfinie
Ⓗ Témoin d'alimentation
Ⓘ Louvre
Ⓙ Ventilation
Ⓚ Signe du filtre
Ⓛ Position du capteur
Ⓜ Température de la pièce
Ⓝ Réglage des ailettes
Ⓞ Vitesse du ventilateur
Ⓟ Témoin de fonctionnement

(E) Controlador remoto-Indicador
(I) Display dell'unità del comando a distanza
(NL) Display afstandbediening
(P) Visualização do controlo remoto

Ⓐ Hora actual/hora del temporizador
Ⓑ Indicador de control centralizado
Ⓒ Indicador de desconexión del temporizador
Ⓓ Indicador de modo del temporizador
Ⓔ Pantalla de modo de funcionamiento: REFRIGERACIÓN, DESHUMIDIFICACIÓN, MODO AUTOMÁTICO, VENTILADOR, CALEFACCIÓN
Ⓕ Indicador de modo de función
Ⓖ Temperatura prefijada
Ⓗ Indicador de encendido
Ⓘ Rejilla
Ⓙ Ventilación
Ⓚ Señalización de filtro
Ⓛ Posición de sensor
Ⓜ Temperatura de la habitación
Ⓝ Ajuste de deflectores
Ⓞ Velocidad del ventilador
Ⓟ Lámpara de funcionamiento

Ⓐ Ora corrente/Timer
Ⓑ Indicatore comando centralizzato
Ⓒ Indicatore Timer non attivato
Ⓓ Indicatore modalità Timer
Ⓔ Visualizzazione modalità di funzionamento: COOL, DRY, AUTO, FAN, HEAT
Ⓕ Indicatore modalità funzione
Ⓖ Preimpostazione temperatura
Ⓗ Indicatore alimentazione
Ⓘ Deflettore
Ⓙ Ventilazione
Ⓚ Simbolo del filtro
Ⓛ Posizione del sensore
Ⓜ Temperatura ambiente
Ⓝ Impostazione lamelle
Ⓞ Velocità di ventilazione
Ⓟ Spia di funzionamento

Ⓐ Huidige tijd/Timertijd
Ⓑ Indicatielampje voor centraal regelen
Ⓒ Indicatielampje timer UIT
Ⓓ Indicatielampje timermodus
Ⓔ Werkingsstand: KOELEN, DROGEN, AUTO, VENTILATOR, VERWARMEN
Ⓕ Indicatielampje functiemodus
Ⓖ Vooraf ingestelde temperatuur
Ⓗ Voedingsindicatielampje
Ⓘ Jaloezie
Ⓙ Ventilatie
Ⓚ Filterteken
Ⓛ Plaats van sensor
Ⓜ Kamertemperatuur
Ⓝ Instelling ventilatorblad
Ⓞ Ventilatorsnelheid
Ⓟ Bedrijfslamp

Ⓐ Hora actual/Hora do temporizador
Ⓑ Indicador de controlo centralizado
Ⓒ Indicador de temporizador OFF
Ⓓ Indicador de modo do temporizador
Ⓔ Visor do modo de funcionamento: REFRIGERAÇÃO, DESUMIDIFICAÇÃO, AUTO, VENTOINHA, AQUECIMENTO
Ⓕ Indicador do modo de funcionamento
Ⓖ Temperatura predefinida
Ⓗ Indicador de corrente
Ⓘ Aba
Ⓙ Ventilação
Ⓚ Sinal do filtro
Ⓛ Posição do sensor
Ⓜ Temperatura ambiente
Ⓝ Regulação da palheta
Ⓞ Velocidade da ventoinha
Ⓟ Lâmpada de funcionamento

(GR) Τηλεχειριστήριο-Επίδειξη

Ⓐ Τρεχουσα ωρα/Ωρα χρονοδιακοπτη
Ⓑ Ενδειξη κεντρικου ελεγχου
Ⓒ Ενδειξη χρονοδιακοπτη OFF
Ⓓ Ενδειξη λειτουργιας χρονοδιακοπτη
Ⓔ Ενδειξη τροπου λειτουργιας: COOL, DRY, AUTO, FAN, HEAT
Ⓕ Ενδειξη τροπου λειτουργιας
Ⓖ Προκαθορισμενη θερμοκρασια
Ⓗ Ενδειξη λειτουργιας
Ⓘ Γριλλιες
Ⓙ Εξαερισμος
Ⓚ Σημα φιλτρου
Ⓛ Θεση αισθητηρα
Ⓜ Θερμοκρασια δωματιου
Ⓝ Ρυθμιση πτερυγιου
Ⓞ Κατάσταση ελέγχου σφαλμάτων
Ⓟ Φωτακι λειτουργιας

(RU) Дисплей контроллера ДУ

Ⓐ Текущее время/таймер
Ⓑ Индикатор централизованного контроля
Ⓒ Индикатор реле времени в положении ВЫКЛ.
Ⓓ Индикатор режима реле времени
Ⓔ Дисплеи режима эксплуатации: COOL (ОХЛАЖДЕНИЕ), DRY (СУШКА), AUTO (АВТО), FAN (ВЕНТИЛЯТОР), HEAT (ОБОГРЕВ)
Ⓕ Индикатор режима функционирования
Ⓖ Предварительно заданная температура
Ⓗ Индикатор мощности
Ⓘ Заслонка
Ⓙ Вентиляция
Ⓚ Символ фильтра
Ⓛ Позиция датчика
Ⓜ Температура в помещении
Ⓝ Установка лопасти
Ⓞ Скорость вентилятора
Ⓟ Рабочая лампа

(TR) Uzaktan kumanda ünitesi-Göstergesi

Ⓐ Mevcut saat/Zamanlayıcı
Ⓑ Merkezi kontrol altında
Ⓒ Zamanlayıcı KAPALI
Ⓓ Zamanlayıcı modu
Ⓔ Programlama modu: SOĞUTMA, KURUTMA, OTOMATİK, FAN, ISITMA
Ⓕ Fonksiyon ayarlama modu
Ⓖ İstenilen sıcaklık
Ⓗ Elektrik AÇIK
Ⓘ Pancur
Ⓙ Havalandırma
Ⓚ Filtre işareti
Ⓛ Sensör konumu
Ⓜ Oda sıcaklığı
Ⓝ Hava akımı
Ⓞ Vantilatör hızı
Ⓟ Çalışma ışığı

(中) 遥控器-显示部分

Ⓐ 当前时间/定时器时间
Ⓑ 中央控制指示器
Ⓒ 定时器关闭指示器
Ⓓ 定时器模式指示器
Ⓔ 运行模式显示：COOL（冷气）、DRY（除湿）、AUTO（自动）、FAN（风扇）、HEAT（暖气）
Ⓕ 功能模式指示器
Ⓖ 预设温度
Ⓗ 电源指示器
Ⓘ 风向
Ⓙ 通风
Ⓚ 滤网标记
Ⓛ 传感器位置
Ⓜ 室温
Ⓝ 叶片设置
Ⓞ 风扇转速
Ⓟ 运行指示灯

(CZ) Displej dálkového ovládání

Ⓐ Aktuální čas/čas časovače
Ⓑ Indikátor centrálního ovládání
Ⓒ Indikátor vypnutého časovače
Ⓓ Indikátor režimu časovače
Ⓔ Zobrazení provozního režimu: CHLADIT, VYSOUŠET, AUTO, VĚTRÁK, VYHŘÍVAT
Ⓕ Indikátor funkčního režimu
Ⓖ Přednastavená teplota
Ⓗ Indikátor napájení
Ⓘ Žaluziový větrák
Ⓙ Větrání
Ⓚ Značka filtru
Ⓛ Poloha snímače
Ⓜ Pokojová teplota
Ⓝ Nastavení lamel
Ⓞ Rychlost větráku
Ⓟ Kontrolka provozu

(SV) Displej diaľkového ovládača

Ⓐ Aktuálny čas/časovač
Ⓑ Centrálne ovládanie
Ⓒ Časovač vyp.
Ⓓ Režim časovača
Ⓔ Zobrazenie režimu ventilácie: CHLADENIE, SUCHÝ, AUTOMATICKÝ, VENTILÁTOR, OHRIEVANIE
Ⓕ Režim nastavenia funkcie
Ⓖ Nastavenie teploty
Ⓗ Indikátor napájania
Ⓘ Žalúziový vetrák
Ⓙ Ventilácia
Ⓚ Znak filtra
Ⓛ Poloha snímača
Ⓜ Teplota v miestnosti
Ⓝ Nastavenie prúdu vzduchu
Ⓞ Rýchlosť ventilátora
Ⓟ Kontrolka ventilácie

(HG) Távirányító - Kijelző

Ⓐ Pontos idő/Időzítő
Ⓑ Központi vezérlés
Ⓒ Időzítő KI jelző
Ⓓ Időzítő üzemmód kijelző
Ⓔ Üzemmód kijelzo: HŰTÉS, SZÁRÍTÁS, AUTOMATA, VENTILÁTOR, FŰTÉS
Ⓕ Funkciókijelző
Ⓖ Hőmérséklet beállítása
Ⓗ Bekapcsolási állapotjelző
Ⓘ Szellőzőzsalu
Ⓙ Szellőztetés
Ⓚ Szűrő jelzés
Ⓛ Érzékelő pozíciója
Ⓜ Helyiséghőmérséklet
Ⓝ Forgólapát beállítása
Ⓞ Ventilátorsebesség
Ⓟ Üzemi lámpa

(PO) Wyświetlacz pilota

Ⓐ Aktualny czas/czas programatora
Ⓑ Wskaźnik sterowania centralnego
Ⓒ Wskaźnik programator WYŁ.
Ⓓ Wskaźnik trybu programatora
Ⓔ Wyświetlacz trybu pracy: COOL (CHŁODZENIE), DRY (OSUSZANIE), AUTO (AUTOMATYCZNY), FAN (WENTYLATOR), HEAT (NAGRZEWANIE)
Ⓕ Wskaźnik trybu funkcji
Ⓖ Ustawiona temperatura
Ⓗ Wskaźnik zasilania
Ⓘ Żaluzje
Ⓙ Wentylacja
Ⓚ Wskaźnik filtra
Ⓛ Położenie czujnika
Ⓜ Temperatura pomieszczenia
Ⓝ Ustawienie łopatek
Ⓞ Prędkość wentylatora
Ⓟ Lampka pracy

V primeru vstopne odprtine spodaj

Ⓐ Trenutni čas/časovnik
Ⓑ Prikaz centralnega upravljanja
Ⓒ Prikaz časovnik IZKLOP
Ⓓ Prikaz načina časovnika
Ⓔ Prikaz načina delovanja: HLAJENJE, SUŠENJE, SAMODEJNO, PREZRAČEVANJE, OGREVANJE
Ⓕ Kazalnik funkcijskega načina
Ⓖ Nastavljena temperatura
Ⓗ Prikaz vklopa
Ⓘ Usmerjevalnik
Ⓙ Prezračevanje
Ⓚ Oznaka filtra
Ⓛ Položaj tipala
Ⓜ Temperatura prostora
Ⓝ Nastavitev vpihovanja
Ⓞ Hitrost ventilatorja
Ⓟ Kontrolna lučka delovanja

[Fig. A]

<PEFY-P-VMS1(L)-E>

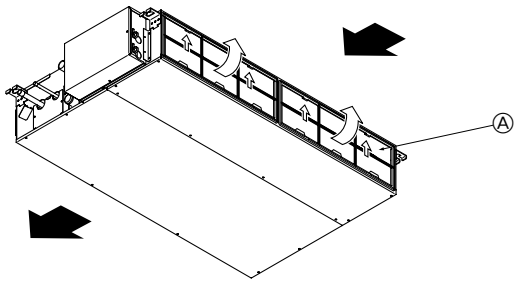

Ⓐ: Filter	➡ : Air Flow
Filter	Luftstrom
Filtre	Flux d'air
Filtro	Flujo de aire
Filtro	Flusso d'aria
Filter	Luchtstroom
Filtro	Fluxo de Ar
Φίλτρο	Ροή αέρα
Фильтр	Воздушный поток
Filtre	Hava Akımı
滤网	气流
Filtr	Proudění vzduchu
Filter	Prúd vzduchu
Szűrő	Levegőáramlás
Filtr	Strumień powietrza
Filter	Tok zraka

Contents

1. Safety precautions 9
   1.1. Installation 9
   1.2. During operation 9
   1.3. Disposing of the unit 10
2. Names and functions of various parts 10
3. How to operate 10
   3.1. ON/OFF 10
   3.2. Selecting operation 10
   3.3. Room temperature adjustment 11
   3.4. Fan speed adjustment 11
   3.5. Ventilation 11
   3.6. Others 11
4. The smart way to use 12
5. Caring for the machine 12
6. Troubleshooting 13
7. Installation, transferring works, and checking 14
8. Specifications 14

1. Safety precautions

- **Before operating the unit, make sure you read all the "Safety precautions".**
- **"Safety precautions" lists important points about safety. Please be sure to follow them.**

Symbols used in the text

⚠ Warning:
Describes precautions that should be observed to avoid the risk of injury or death to the user.

⚠ Caution:
Describes precautions that should be observed to prevent damage to the unit.

Symbols used in the illustrations

⃠ : Indicates an action that must be avoided.

❗ : Indicates that important instructions must be followed.

⏚ : Indicates a part which must be grounded.

⚠ : Indicates that caution should be taken with rotating parts. (This symbol is displayed on the main unit label.) <Color: yellow>

⚠ : Beware of electric shock. (This symbol is displayed on the main unit label.) <Color: yellow>

⚠ Warning:
Carefully read the labels affixed to the main unit.

1.1. Installation

- **After you have read this manual, keep it and the Installation Manual in a safe place for easy reference whenever a question arises. If the unit is going to be operated by another person, make sure that this manual is given to him or her.**

⚠ Warning:
- **The unit should not be installed by the user. Ask the dealer or an authorized company to install the unit. If the unit is installed improperly, water leakage, electric shock or fire may result.**
- **Use only accessories authorized by Mitsubishi Electric and ask your dealer or an authorized company to install them. If accessories are installed improperly, water leakage, electric shock or fire may result.**
- **The Installation Manual details the suggested installation method. Any structural alteration necessary for installation must comply with local building code requirements.**
- **Never repair the unit or transfer it to another site by yourself. If repair is performed improperly, water leakage, electric shock or fire may result. If you need to have the unit repaired or moved, consult your dealer.**
- **Keep the electric parts away from water (washing water) etc.**
- **It might result in electric shock, catching fire or smoke.**
  Note1: When washing the Heat Exchanger and Drain Pan, ensure the Control Box, Motor and LEV remain dry, using a water proof covering.
  Note2: Never drain the washing water for the Drain Pan and the Heat Exchanger using the Drain Pump. Drain separately.
- **The appliance is not intended for use by young children or infirm persons without supervision.**
- **Young children should be supervised to ensure that they do not play with the appliance.**
- **Do not use a leak detection additive.**

1) Outdoor unit

⚠ Warning:
- **The outdoor unit must be installed on a stable, level surface, in a place where there is no accumulation of snow, leaves or rubbish.**
- **Do not stand on, or place any items on the unit. You may fall down or the item may fall, causing injury.**

⚠ Caution:
The outdoor unit should be installed in a location where air and noise emitted by the unit will not disturb the neighbours.

2) Indoor unit

⚠ Warning:
The indoor unit should be securely installed. If the unit is loosely mounted, it may fall, causing injury.

3) Remote controller

⚠ Warning:
The remote controller should be installed in such a way that children cannot play with it.

4) Drain hose

⚠ Caution:
Make sure that the drain hose is installed so that drainage can go ahead smoothly. Incorrect installation may result in water leakage, causing damage to furniture.

5) Power line, fuse or circuit breaker

⚠ Warning:
- **Make sure that the unit is powered by a dedicated supply. Other appliances connected to the same supply could cause an overload.**
- **Make sure that there is a main power switch.**
- **Be sure to adhere to the unit's voltage and fuse or circuit breaker ratings. Never use a piece of wire or a fuse with a higher rating than the one specified.**

6) Grounding

⚠ Caution:
- **The unit must be properly grounded. Never connect the grounding wire to a gas pipe, water pipe, lightning conductor or telephone grounding wire. If the unit is not grounded properly, electric shock may result.**
- **Check frequently that the ground wire from the outdoor unit is properly connected to both the unit's ground terminal and the grounding electrode.**

1.2. During operation

⚠ Caution:
- **Do not use any sharp object to push the buttons, as this may damage the remote controller.**
- **Do not twist or tug on the remote controller cord as this may damage the remote controller and cause malfunction.**
- **Never remove the upper case of the remote controller. It is dangerous to remove the upper case of the remote controller and touch the printed circuit boards inside. Doing so can result in fire and failure.**
- **Never wipe the remote controller with benzene, thinner, chemical rags, etc. Doing so can result in discoloration and failure. To remove heavy stains, soak a cloth in neutral detergent mixed with water, wring it out thoroughly, wipe the stains off, and wipe again with a dry cloth.**
- **Never block or cover the indoor or outdoor unit's intakes or outlets. Tall items of furniture underneath the indoor unit, or bulky items such as large boxes placed close to the outdoor unit will reduce the unit's efficiency.**

⚠ Warning:
- **Do not splash water over the unit and do not touch the unit with wet hands. An electric shock may result.**
- **Do not spray combustible gas close to the unit. Fire may result.**
- **Do not place a gas heater or any other open-flame appliance where it will be exposed to the air discharged from the unit. Incomplete combustion may result.**

GB

⚠ **Warning:**

- **Do not remove the front panel or the fan guard from the outdoor unit when it is running. You could be injured if you touch rotating, hot or high-voltage parts.**
- **Never insert fingers, sticks etc. into the intakes or outlets, otherwise injury may result, since the fan inside the unit rotates at high speed. Exercise particular care when children are present.**
- **If you detect odd smells, stop using the unit, turn off the power switch and consult your dealer. Otherwise, a breakdown, electric shock or fire may result.**
- **When you notice exceptionally abnormal noise or vibration, stop operation, turn off the power switch, and contact your dealer.**
- **Do not over-cool. The most suitable inside temperature is one that is within 5 °C of the outside temperature.**
- **Do not leave handicapped people or infants sitting or standing in the path of the airflow from the air-conditioner. This could cause health problems.**

⚠ **Caution:**

- **Do not direct the airflow at plants or caged pets.**
- **Ventilate the room frequently. If the unit is operated continuously in a closed room for a long period of time, the air will become stale.**

GB

In case of failure

⚠ **Warning:**

- **Never remodel the air conditioner. Consult your dealer for any repair or service. Improper repair work can result in water leakage, electric shock, fire, etc.**
- **If the remote controller displays an error indication, the air conditioner does not run, or there is any abnormality, stop operation and contact your dealer. Leaving the unit as it is under such conditions can result in fire or failure.**
- **If the power breaker is frequently activated, get in touch with your dealer. Leaving it as it is can result in fire or failure.**
- **If the refrigeration gas blows out or leaks, stop the operation of the air conditioner, thoroughly ventilate the room, and contact your dealer. Leaving the unit as it is can result in accidents due to oxygen deficiency.**

When the air conditioner is not to be used for a long time

- **If the air conditioner is not to be used for a long time due to a seasonal change, etc., run it for 4 - 5 hours with the air blowing until the inside is completely dry. Failing to do so can result in the growth of unhygienic, unhealthy mold in scattered areas throughout the room.**
- **When it is not to be used for an extended time, keep the [power supply] turned OFF.**
  If the power supply is kept on, several watts or several tens of watts will be wasted. Also, the accumulation of dust, etc., can result in fire.
- **Keep the power switched ON for more than 12 hours before starting operation. Do not turn the power supply OFF during seasons of heavy use. Doing so can result in failure.**

1.3. Disposing of the unit

⚠ **Warning:**

When you need to dispose of the unit, consult your dealer. If pipes are removed incorrectly, refrigerant (fluorocarbon gas) may blow out and come into contact with your skin, causing injury. Releasing refrigerant into the atmosphere also damages the environment.

2. Names and functions of various parts

Attachment and detachment of filter

[Fig. A] (P.8)

⚠ **Caution:**

- **In removing the filter, precautions must be taken to protect your eyes from dust. Also, if you have to climb up on a stool to do the job, be careful not to fall.**
- **Turn off the power supply when the filter is changed.**

3. How to operate

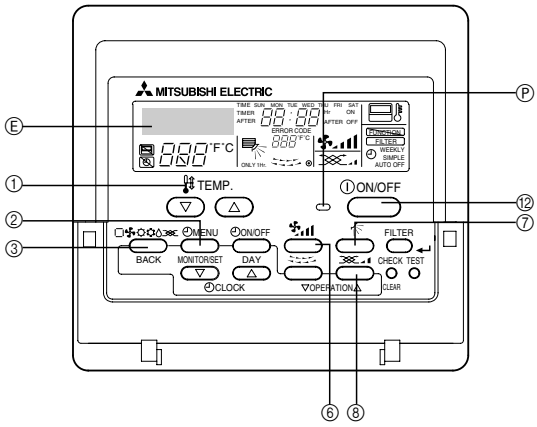

Before starting operation

- Start running after the "PLEASE WAIT" display has disappeared. The "PLEASE WAIT" display briefly appears on the room temperature display (max. 3 minutes) when the power is turned on and after a power failure. This does not indicate any failure of the air-conditioner.
- The choice of indoor unit operation mode is limited by the operation status of the outdoor unit to which a given indoor unit is connected. If an outdoor unit and some of the indoor units that are connected to the outdoor units are already operating in the cooling mode, for example, only the cooling mode is available for the rest of the units in the same group. If a different mode is requested, the symbol that corresponds to the requested mode will blink, notifying the user that the mode is currently unavailable. The same is true for the dry and heating mode. This restriction, however, does not apply to the models that support a simultaneous cooling/heating function.
- The outdoor units stop when all the indoor units connected to the counterpart outdoor units stop.
- During heating operation, even if the indoor unit is set to operation while the outdoor unit is in defrosting operation, operation starts after the defrosting operation of the outdoor unit has ended.

3.1. ON/OFF

Start an operation

1. **Press the ⑫ [ON/OFF] button**
   Ⓟ Operation lamp lights up and operation starts.

Stop an operation

1. **Press the ⑫ [ON/OFF] button again**
   Operation lamp goes off and operation stops.

- Once the Buttons have been set, pressing of the [ON/OFF] Button only can repeat the same operation thereafter.
- During operation, the operation lamp above the [ON/OFF] button lights up.

⚠ **Caution:**

Even if the [ON/OFF] Button is pressed immediately after the operation is once stopped, operation is not restarted for about 3 minutes. This function protects the machine. It automatically starts operation after the lapse of approximately 3 minutes.

3.2. Selecting operation

When selecting operation

1. **Press the ③ [Mode (Back)] Button**
   Consecutive press of the selecting operation Button switches the operation over to Ⓔ "COOL", "DRY", "FAN", ("AUTO"), and ("HEAT"). For the contents of operation, check the display.

For cooling

Press the ③ [Mode (Back)] Button and bring up the "COOL" display.

For dry

Press the ③ [Mode (Back)] Button and bring up the "DRY" display.

- The indoor fan turns to the low-speed operation, disabling the change of fan speed.
- Dry operation cannot be carried out at room temperature of less than 18 °C.

For fan

Press the ③ [Mode (Back)] Button and bring up the "FAN" display.

- The fan operation functions to circulate the air in the room.
- The temperature of the room cannot be set by fan operation.

⚠ Caution:

Never expose your body directly to cool air for a long time. Excessive exposure to cool air is bad for your health, and should therefore be avoided.

Dry operation

The dry is a microcomputer-controlled dehumidifying operation which controls excessive air-cooling according to the room temperature of your choice. (Not usable for heating.)

1. Until reaching room temperature of your choice
   The compressor and indoor fan function is linked motion according to the change of the room temperature and automatically repeat ON/OFF.
2. When reaching room temperature of your choice
   Both the compressor and indoor fan stop.
   When stop continues for 10 minutes, the compressor and indoor fan are operated for 3 minutes to keep the humidity low.

For heating

Press the ③ [Mode (Back)] Button to bring up the "HEAT" display.

Regarding displays during heating operation "DEFROST"

Displayed only during the defrosting operation.

"STAND BY"

Displayed from the start of heating operation until the moment warm air blows out.

⚠ Caution:

- **When the air-conditioner is used together with burners, thoroughly ventilate the area. Insufficient ventilation can result in accidents due to oxygen deficiency.**
- **Never place a burner at a place where it is exposed to the airflow from the air-conditioner.**
  Doing so can result in imperfect combustion of the burner.
- **The microcomputer functions in the following cases: ***
- **Air does not blow out when heating starts. ***
  - To prevent any cool air from escaping, the indoor fan is gradually switched in sequence from faint airflow/weak airflow/set airflow according to the temperature rise of the blown out air. Wait a moment until the airflow comes out naturally.
- **The fan is not moving at the set speed. ***
  - In some models, the system switches over to faint airflow when the temperature of the room reaches the set temperature. In other cases, it stops to prevent any cool air from escaping during the defrosting operation.
- **Air flows out even if operation is stopped. ***
  - Approximately 1 minute after the stop of operation, the indoor fan sometimes rotates to eliminate extra heat generated by the electric heater, etc. The fan speed comes to low or high.

3.3. Room temperature adjustment

To change room temperature

Press the ① [Set Temperature] Button and set the room temperature of your choice.

Pressing △ or ▽ once changes the setting by 1 °C.
If the pressing is continued, the setting continues to change by 1 °C.

- Indoor temperature can be set within the following range.
  Cooling/dry :19 °C - 30 °C
  Heating :17 °C - 28 °C
- Temperature cannot be set for the fan mode.

* The range of room temperature display is 8 °C - 39 °C. Outside this range, the display flashes either 8 °C - 39 °C to inform you if the room temperature is lower or higher than the displayed temperature.

3.4. Fan speed adjustment

To change fan speed

Every time you press the ⑥ [Fan Speed] button once, it switches from the low-speed to high-speed settings successively.

In the electronics dry operation, the indoor fan automatically turns to low-speed operation. Switching of fan speed is impossible. (Only the display on the remote controller changes.)

* Every time the fan speed adjustment button is pressed once, the fan speed is changed.

[PEFY-P-VMS series]

Fan speed : 3 stages

Display: (Low)→ (Mid)→ (High)→ (AUTO*)

* This setting can be adjusted only with MA remote controller.

3.5. Ventilation

- The ventilation unit (OA processing unit or LOSSNAY) automatically goes into operation when the indoor unit that is interlocked with it goes into operation.
- If the ⑧ [Ventilation] button is pressed while the indoor unit is stopped, only the ventilator goes into operation.
- Press the ⑧ [Ventilation] button to change the fan speed.
- Depending on the models, the indoor unit fan goes into operation while the unit is in the ventilation mode.

3.6. Others

	: Displayed when control is executed by a separately sold centralized control unit, etc.
STAND BY DEFROST	: Displayed from the start of heating operation until the moment warm air blows out.
CHECK	: This displays indication when some abnormality occurs in the unit.
NOT AVAILABLE	: When a Button is pressed for any function which the indoor unit cannot perform, this display flashes concurrently with the display of that function.
	: In the system in which the [Sensor] display is indicated as the "remote controller", room temperature measurement is performed by the room temperature sensor built into the remote controller.
FILTER	: Displayed when it is time to clean the filter. Press the ⑪ [Filter (↵)] Button twice, then the display is disappeared.

GB

4. The smart way to use

Even minimal steps to care for your air conditioner can help make its use far more effective in terms of air-conditioning effect, electricity charges, etc.

Set the right room temperature

- In cooling operation, a temperature difference of about 5 °C between indoors and outdoors is optimum.
- If the room temperature is raised by 1 °C during air-cooling operation, about 10 % electric power can be saved.
- Excessive cooling is bad for health. It also results in the waste of electric power.

Clean the filter thoroughly

- If the screen of the air filter becomes clogged, the airflow and air-conditioning effect can be significantly reduced.
  Further, if the condition is left unattended, failure can result. It is particularly important to clean the filter at the beginning of the cooling and heating seasons. (When profuse dust and dirt have accumulated, clean the filter thoroughly.)

Prevent intrusion of heat during air-cooling

- To prevent the intrusion of heat during cooling operation, provide a curtain or a blind on the window to block out direct sunlight. Also, do not open the entrance or exit except in cases of dire necessity.

Carry out ventilation sometimes

- Since the air periodically gets dirty in a room that is kept closed for a long time, ventilation is sometimes necessary. When gas appliances are used together with the air conditioner, special precautions must be taken. If the “LOSSNAY” ventilation unit developed by our company is used, you can perform ventilation with less waste. For details on this unit, consult with your dealer.

GB

5. Caring for the machine

Always have filter maintenance performed by a service person.
Before care-taking, turn the power supply OFF.

⚠ Caution:

- **Before you start cleaning, stop operation and turn OFF the power supply. Remember that the fan is rotating inside at high speed, posing a serious risk of injury.**
- **Indoor units are equipped with filters to remove the dust of sucked-in air. Clean the filters using the methods shown in the following sketches. (The standard filter should normally be cleaned once a week, and the long-life filter at the beginning of each season.)**
- **The life of the filter depends on where the unit is installed and how it is operated.**

How to clean

- Clear dust away lightly or clean it up with a vacuum cleaner. In the case of severe staining, wash the filter in lukewarm water mixed with dissolved neutral detergent or water, and then rinse off the detergent completely. After washing, dry it and fix it back into place.

⚠ Caution:

- **Do not dry the filter by exposing it to direct sunlight or warming it using fire, etc. Doing so can result in the deformation of the filter.**
- **Washing it in hot water (more than 50 °C) can also result in deformation.**

⚠ Caution:

Never pour water or flammable sprays onto the air conditioner. Cleaning using these methods can result in the failure of the air conditioner, electric shock, or fire.

6. Troubleshooting

Before you ask for repair service, check the following points:

State of Machine	Remote Controller	Cause	Troubleshooting
It does not run.	"◉" display is not lit up. No display appears even when the [ON/OFF] button is pressed.	Power failure	Press the [ON/OFF] button after power restoration.
		The power supply is turned OFF.	Turn the power supply ON.
		The fuse in the power supply is gone.	Replace fuse.
		The earth leakage breaker is gone.	Put in the earth leakage breaker.
Air flows out but it does not cool enough or heat enough.	The liquid crystal display shows that it is in the state of operation.	Improper temperature adjustment	After checking the set temperature and inlet temperature on the liquid crystal display, refer to [Room temperature adjustment], and operate the adjustment button.
		The filter is filled with dust and dirt.	Clean up the filter. (Refer to [Caring for the machine].)
		There are some obstacles at the air inlet and outlet of the indoor and outdoor units.	Remove.
		Windows and doors are open.	Close.
Cool air or warm air does not come out.	The liquid crystal display shows that it is in operation.	The restart-preventing circuit is in operation for 3 minutes.	Wait for a while. (To protect the compressor, a 3-minute restart-preventing circuit is built into the indoor unit. Therefore, there are occasions sometimes when the compressor does not start running immediately. There are cases when it does not run for as long as 3 minutes.)
		Indoor unit operation was restarted during the heating and defrosting operation.	Wait for a while. (Heating operation starts after ending defrosting operation.)
It runs briefly, but soon stops.	The "check" and check code flashes on the liquid crystal display.	There are some obstacles at the air inlet and outlet of the indoor and outdoor units.	Rerun after removal
		The filter is filled with dust and dirt.	Rerun after cleaning the filter. (Refer to [Caring for the machine].)
The sound of the exhaust and rotation of the motor can still be heard after stop of running.	All lights are out except the powered display of "◉".	When other indoor units are engaged in cooling operation, the machine stops after running a drain-up mechanism for 3 minutes when air-cooling operation is stopped.	Wait for 3 minutes.
The sound of the exhaust and the rotation of the motor can be heard intermittently after stop of running.	All lights are out except the powered display of "◉".	When other indoor units are engaged in cooling operation, drained water is brought in. If the drain water is collected, the drain-up mechanism initiates a draining operation.	It soon stops. (If the noise occurs more than 2-3 times in an hour, ask for repair service.)
Warm air comes out intermittently when the thermostat is OFF or during fan operation.	The liquid crystal display shows that it is in the state of operation.	When other indoor units are engaged in heating operation, the control valves are opened and closed from time to time to maintain the stability of the system.	It soon stops. (If the room temperature rises uncomfortably high in a small room, stop operation.)

- If operation stops due to a power failure, the [restart-preventing circuit at power failure] operates and disables unit operation even after power restoration. In this case, press the [ON/OFF] button again and start operation.

If malfunctions persist after you have checked the above, turn the power supply OFF and contact your dealer with information about the product name, the nature of the malfunction, etc. If the display of "[check]" and (4 digit) check code flashes, tell the dealer contents of the display (check code). Never attempt to repair by yourself.

The following symptoms are not air conditioner failures:

- The air blown out from the air conditioner can sometimes give off odors. This is due to cigarette smoke contained in the air of the room, the smell of cosmetics, the walls, furniture, etc., absorbed in the air conditioner.
- A hissing noise can be heard immediately after the air conditioner is started or stopped. This is the sound of the refrigeration flowing inside the air conditioner. This is normal.
- The air conditioner sometimes snaps or clicks at the beginning or end of cooling/heating operation. This is the sound of friction on the front panel and other sections due to expansion and contraction caused by temperature change. This is normal.

7. Installation, transferring works, and checking

Regarding place for installation

Consult with your dealer for details on installation and transferring the installation.

⚠ Caution:

Never install the air conditioner where there is a risk of leakage of flammable gas.
If gas leaks and accumulates around the unit, fire can result.

Never install the air conditioner at the following place:

- where there is a lot of machine oil
- near the ocean and beach areas where there is salt air.
- where humidity is high
- where there are hot springs nearby
- where there is sulphurous gas
- where there is a high-frequency processing machinery (a high-frequency welder, etc.)
- where acid solution is frequently used
- where special sprays are frequently used
- Install the indoor unit horizontally. Otherwise, water leakage can result.
- Take sufficient measures against noise when installing the air conditioners at hospitals or communication-related businesses.

If the air conditioner is used in any of the above-mentioned environments, frequent operational failure can be expected. It is advisable to avoid these types of installation sites.
For further details, consult with your dealer.

Regarding electrical work

⚠ Caution:

- **The electrical work must be undertaken by a person who is qualified as an electrical engineer according to the [technical standard respecting electrical installation], [internal wiring rules], and the installation instruction manual with the absolute use of exclusive circuits. The use of other products with the power source can result in burnt-out beakers and fuses.**
- **Never connect the grounding wire to a gas pipe, water pipe, arrester, or telephone grounding wire. For details, consult with your dealer.**
- **In some types of installation sites, the installation of an earth leakage breaker is mandatory. For details, consult with your dealer.**

Regarding transfer of installation

- When removing and reinstalling the air conditioner when you enlarge your home, remodel, or move, consult with your dealer in advance to ascertain the cost of the professional engineering work required for transferring the installation.

⚠ Caution:

When moving or reinstalling the air conditioner, consult with your dealer. Defective installation can result in electric shock, fire, etc.

Regarding noise

- In installing work, choose a place that can fully bear the weight of the air conditioner, and where noise and vibration can be reduced.
- Choose a place where cool or warm air and noise from the outdoor air outlet of the air conditioner does not inconvenience the neighbors.
- If any alien object is placed near the outdoor air outlet of the air conditioner, decreased performance and increased noise can result. Avoid placing any obstacles adjacent to the air outlet.
- If the air conditioner produces any abnormal sound, consult with your dealer.

Maintenance and inspection

- If the air conditioner is used throughout several seasons, the insides can get dirty, reducing the performance.

  Depending upon the conditions of usage, foul odors can be generated and drainage can deteriorate due to dust and dirt, etc.

8. Specifications

PEFY-P-VMS1(L)-E series

Item / Model			P15VMS1(L)-E	P20VMS1(L)-E	P25VMS1(L)-E	P32VMS1(L)-E	P40VMS1(L)-E	P50VMS1(L)-E	P63VMS1(L)-E
Power source			~220-240V 50/60Hz						
Cooling capacity*1/Heating capacity*1		kW	1.7/1.9	2.2/2.5	2.8/3.2	3.6/4.0	4.5/5.0	5.6/6.3	7.1/8.0
Dimension	Height	mm	200	200	200	200	200	200	200
	Width	mm	700	700	700	700	900	900	1,100
	Depth	mm	700	700	700	700	700	700	700
Net weight		kg	19 (18)	19 (18)	19 (18)	20 (19)	24 (23)	24 (23)	28 (27)
Fan	Airflow rate (Low-Middle-High)	m^3/min	5-6-7	5.5-6.5-8	5.5-7-9	6-8-10	8-9.5-11	9.5-11-13	12-14-16.5
	External static pressure*3	Pa	5/15/35/50	5/15/35/50	5/15/35/50	5/15/35/50	5/15/35/50	5/15/35/50	5/15/35/50
Noise level (Low-Middle-High)*3 *4		dB(A)	22-24-28	23-25-29	23-26-30	23-27-32	28-30-33	30-32-35	30-33-36
Filter			Standard filter						

Notes: * Operation temperature of indoor unit.
Cooling mode: 15 °C WB - 24 °C WB
Heating mode: 15 °C DB - 27 °C DB
*1 Cooling/Heating capacity indicates the maximum value at operation under the following condition.
Cooling: Indoor: 27 °C DB/19 °C WB Outdoor: 35 °C DB
Heating: Indoor: 20 °C DB Outdoor: 7 °C DB/6 °C WB
*2 The figure in ( ) indicates VMS1L.
*3 The external static pressure is set to 15 Pa at factory shipment.
*4 The operating noise is the data that was obtained in an anechoic room.

This product is designed and intended for use in the residential, commercial and light-industrial environment.

The product at hand is based on the following EU regulations:

- Low Voltage Directive 2006/95/EC
- Electromagnetic Compatibility Directive 2004/108/EC

Please be sure to put the contact address/telephone number on this manual before handing it to the customer.

MITSUBISHI ELECTRIC CORPORATION
HEAD OFFICE: TOKYO BLDG., 2-7-3, MARUNOUCHI, CHIYODA-KU, TOKYO 100-8310, JAPAN

KB79H131H03