Changes for the Better

SERVICE PARTS LIST FOR MITSUBISHI ELECTRIC PACKAGED AIR-CONDITIONERS

Series : PURY-RP•YJM-A(-BS)

For use with the R410A

June 2010

BWE10070

INDEX
PURY-RP200YJM-A PURY-RP200YJM-A-BS PURY-RP250YJM-A PURY-RP250YJM-A-BS PURY-RP300YJM-A PURY-RP300YJM-A-BS

Part information update day : 2010/06/18

MITSUBISHI ELECTRIC

EXTERNAL PARTS & BLOWER PARTS

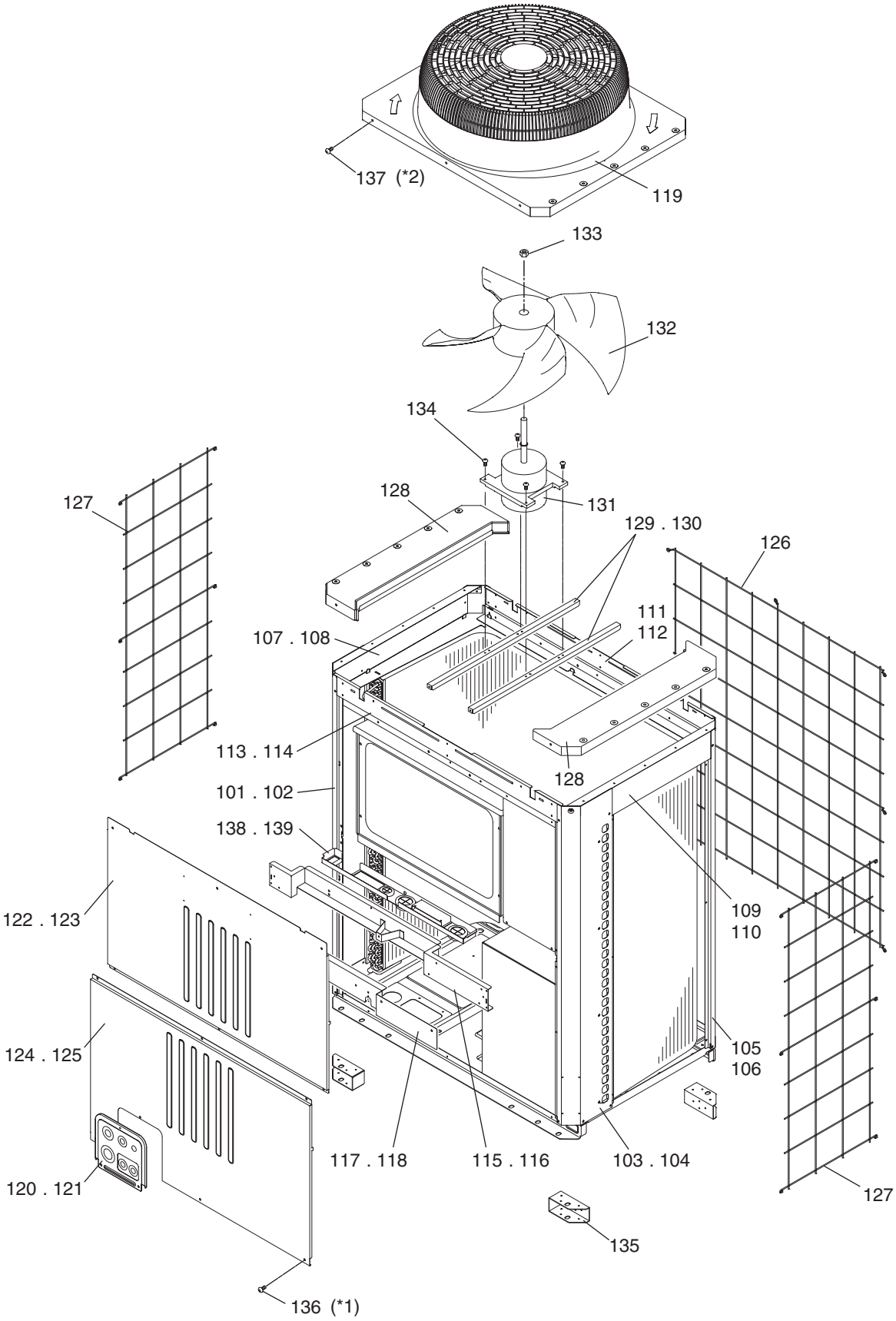

*1: Each unit requires 100 H screws (Part No. 136).
*2: Each unit requires 54 WFT screws (Part No. 137).

EXTERNAL PARTS & BLOWER PARTS

No.	Part No.	G : RoHS Apply Only W : RoHS Apply by Running Change	Part Name	Spec.	PURY-RP200YJM-A	PURY-RP200YJM-A-BS	PURY-RP250YJM-A	PURY-RP250YJM-A-BS	PURY-RP300YJM-A	PURY-RP300YJM-A-BS	Dwg. No.	Notes for the models	Revision info.
101	R11 019 626	G	Pillar LF		1		1		1		KB02A011G07		
102	R11 020 626	G	Pillar LF	BS		1		1		1	KB02A011G08		
103	R11 014 626	G	Pillar RF		1		1		1		KB02A012G07		
104	R11 015 626	G	Pillar RF	BS		1		1		1	KB02A012G08		
105	R63 002 627	G	Pillar B		2		2		2		KB02A013G07		
106	R63 003 627	G	Pillar B	BS		2		2		2	KB02A013G08		
107	R63 038 162	G	Frame assy L		1		1		1		KB00C163G09		
108	R63 040 162	G	Frame assy L	BS		1		1		1	KB00C163G10		
109	R63 039 162	G	Frame assy R		1		1		1		KB00C164G09		
110	R63 041 162	G	Frame assy R	BS		1		1		1	KB00C164G10		
111	R63 019 111	G	Frame assy B	18	1		1		1		KB00C464G03		
112	R63 020 111	G	Frame assy B	18 BS		1		1		1	KB00C464G04		
113	R63 021 111	G	Frame F	18HP	1		1		1		KB02B093H03		
114	R63 022 111	G	Frame FB	18HP BS		1		1		1	KB02B093G04		
115	R61 031 162	G	Frame assy MU	18	1		1		1		KB00T829G01		
116	R61 033 162	G	Frame assy MU	18 BS		1		1		1	KB00T829G03		
117	R61 006 162	G	Frame assy MB	18	1		1		1		KB00L186G01		
118	R61 008 162	G	Frame assy MB	18 BS		1		1		1	KB00L186G07		
119	R63 4H6 118	G	Fan guard		1	1	1	1	1	1	KB25A008G02		
120	R61 088 690	G	Piping cover	R2	1		1		1		KB02L001G05		
121	R61 089 690	G	Piping cover	R2 BS		1		1		1	KB02L001G06		
122	R61 051 651	G	Panel FU	18HP	1		1		1		KB02B402H01		
123	R63 7H8 651	G	Panel FU	18HP BS		1		1		1	KB02B402G02		
124	R61 005 652	G	Panel FB	18HP YHM-A	1		1		1		KB02B403H02		
125	R61 006 652	G	Panel FB	18HP YHM BS		1		1		1	KB02B403G03		
126	R61 003 118	G	Fin guard B	18HP	1	1	1	1	1	1	KB07T209G01		
127	R61 007 611	G	Fin guard LR		2	2	2	2	2	2	KB07C043G03		
128	R63 7H6 118	G	Fan guard cover		2	2	2	2	2	2	KB25B086G01		
129	R63 4H6 140	G	Base fan		2		2		2		KB02D050H01		
130	R63 4H7 140	G	Base fan	BS		2		2		2	KB02D050G01		
131	R61 122 220	G	Motor	YC920IA	1	1	1	1	1	1	P780109X02		
132	R63 4H6 300	G	Fan		1	1	1	1	1	1	KB25A009H02		
133	R63 4H6 122	G	Box nut	M12 CH	1	1	1	1	1	1	P552000X01		
134	R63 014 087	G	PT Screw	6×10	4	4	4	4	4	4	P516047X01		
135	R61 016 130	G	Attachment leg		4	4	4	4	4	4	KB02T248G01		
136	R63 007 087	G	H Screw	5×14 KNURLED (30 pcs)	4	4	4	4	4	4	KB00H418G14	*1	
137	R63 006 087	G	WFT Screw	5×12 (30 pcs)	2	2	2	2	2	2	KB00H418G01	*2	
138	R61 001 261	G	Snow guard assy		1		1		1		KB00M950G11		
139	R63 T01 261	G	Snow guard assy	BS		1		1		1	KB00M950G10		

FUNCTIONAL PARTS

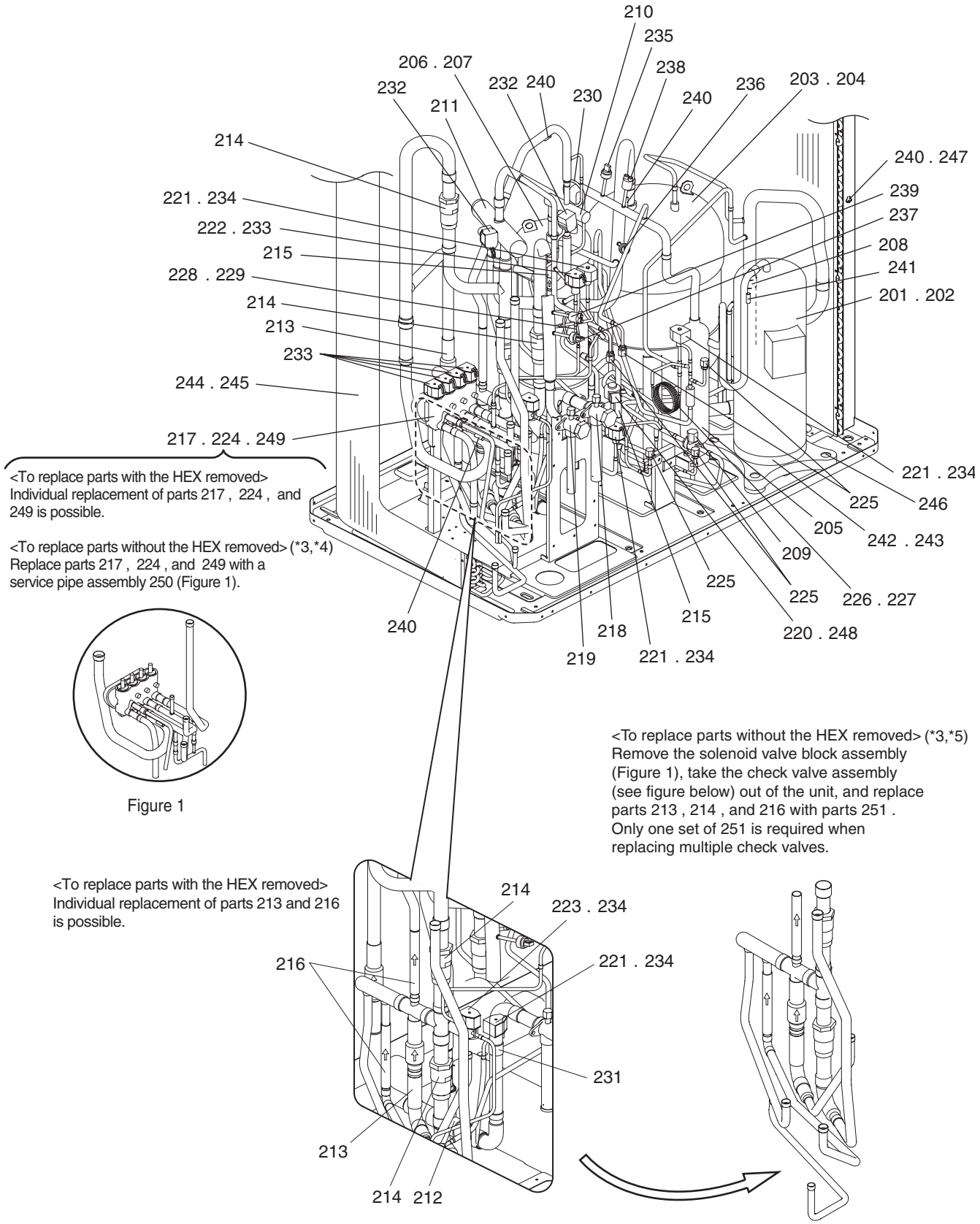

*3: Refer to the replacement instructions provided with parts 250 and 251 for details.
*4: A solenoid valve block assy, a connecting pipe, and a sheet of replacement instructions are included with Solenoid valve block service parts kit (No. 250).
*5: A connecting pipe and a sheet of replacement instructions are included with Service parts with instructions (No. 251).

FUNCTIONAL PARTS

No.	Part No.	G : RoHS Apply Only W : RoHS Apply by Running Change	Part Name	Spec.	PURY-RP200YJM-A	PURY-RP200YJM-A-BS	PURY-RP250YJM-A	PURY-RP250YJM-A-BS	PURY-RP300YJM-A	PURY-RP300YJM-A-BS	Dwg. No.	Notes for the models	Revision info.
201	R69 068 478	G	Scroll compressor	ENB52FC-YE	1	1					EP10107B08		
202	R69 070 478	G	Scroll compressor	HNB78FC-YE			1	1	1	1	EP10109B08		
203	R61 065 484	G	Accumulator assy		1		1		1		KB54J613G01		
204	R61 066 484	G	Accumulator assy	BS		1		1		1	KB54J613G02		
205	R61 018 487	G	Oil separator assy		1	1	1	1	1	1	KB00T550G01		
206	R61 011 530	G	Oil tank		1		1		1		KB54J612G01	(RECOVERY)	
207	R61 012 530	G	Oil tank	BS		1		1		1	KB54J612G02	(RECOVERY)	
208	R61 084 494	G	Pipe assy		1	1	1	1	1	1	KB00C787G01	(SUCTION)	
209	R61 001 420	G	Three way valve	SBV-A3YGME-2	1	1	1	1	1	1	P633125X01	<BV3>	
210	R61 004 235	G	Two way valve	MHV-1104	1	1	1	1	1	1	P637048X01	<SV6>	
211	R63 Y05 154	G	Four way valve	STF-07	1	1	1	1	1	1	P633119X01	<21S4a>	
212	R63 S84 418	G	Check valve block assy		1	1	1	1	1	1	W902879G02	<CV2a>	
213	R61 001 418	G	Check valve	BVC-1810	2	2	2	2	2	2	P639170X01	<CV3a,CV9a>	
214	R61 002 418	G	Check valve		4	4	4	4	4	4	P639175X01	<CV4a,CV5a,CV7a,CV8a>	
215	R63 984 904	G	Check valve	BCV-804DY	2	2	2	2	2	2	P639163X01	<CV11a,CV12a>	
216	R63 R43 418	G	Check valve	BCV-1005DYQ82	2	2	2	2	2	2	P639165X01	<CV6a,CV10a>	
217	R61 030 232	G	Valve block assy		1	1	1	1	1	1	KB00L126G02	<4SV>	
218	R61 002 540	G	Valve	VSAMH8SSCM-A	1	1	1	1	1	1	P636343X01	<BV1>	
219	R61 006 538	G	Valve	VSAMH6SSCM-LA1	1	1	1	1	1	1	P636352X01	<BV2>	
220	R63 4H6 401	G	Linear expansion valve	CAM35-S	1	1	1	1	1	1	P632444X01	<SLEV>	
221	R63 P90 232	G	Solenoid valve	VPV-152D	4	4	4	4	4	4	P631277X01	<SV1a,SV5c,SV2,SV8>	
222	R63 Y07 232	G	Solenoid valve	ATS-A	1	1	1	1	1	1	P631291X01	<SV9>	
223	R63 027 232	G	Solenoid valve	VPV-L	1	1	1	1	1	1	P631296X01	<SV5b>	
224	R63 6A7 235	G	Solenoid valve	ACS METAL	4	4	4	4	4	4	P631310X01	<SV4a,SV4b,SV4c,SV4d>	
225	R63 R34 413	G	Check joint L	R410A	5	5	5	5	5	5	P666004X02	<(HP)CJ1,(LP)CJ2,CJ3,CJ4,CJ5>	
226	R61 015 425	G	Capillary tube assy		1	1					KB49P478G01	<CP1>	
227	R61 016 425	G	Capillary tube assy				1	1	1	1	KB49P479G01	<CP1>	
228	R61 006 425	G	Capillary tube assy		1	1					KB49H698G01	<CP2>	
229	R61 008 425	G	Capillary tube assy				1	1	1	1	KB49H700G01	<CP2>	
230	R61 013 425	G	Capillary tube assy		1	1	1	1	1	1	KB49K872G01	<CP3>	
231	R61 008 454	G	Strainer	25.4D	1	1	1	1	1	1	KB48K250G01	<ST1>	
232	R63 Y16 243	G	Solenoid coil	STF DV	2	2	2	2	2	2	P472024X01	<21S4a,SV6>	
233	R63 Y18 243	G	Solenoid coil		5	5	5	5	5	5	P472012X01	<SV4a,SV4b,SV4c,SV4d,SV9>	
234	R61 006 243	G	Solenoid coil	VPV Y	5	5	5	5	5	5	P472046X01	<SV1a,SV2,SV5c,SV5b,SV8>	
235	R61 006 288	G	Pressure sensor	HP D173	1	1	1	1	1	1	KB00H904G09	<63HS1>	
236	R61 007 288	G	Pressure sensor	LP D173	1	1	1	1	1	1	KB00H904G10	<63LS>	
237	R63 008 288	G	Pressure sensor	HP D184	1	1	1	1	1	1	KB00F899G06	<63HS2>	
238	R63 Y11 208	G	Pressure switch	ACB1UB28W	1	1	1	1	1	1	P426320X01	<63H1>	
239	R61 003 208	G	Pressure switch	3.6OFF	1	1	1	1	1	1	P426330X01	<63H2>	
240	R61 060 200	G	Thermistor		4	4	4	4	4	4	P418065X01	<TH3,TH5,TH6,TH7>	
241	R63 911 202	G	Thermistor		1	1	1	1	1	1	P425416X02	<TH4>	
242	R61 003 237	G	Belt heater	240V 35W	1	1					P497067X01	<CH11>	
243	R63 Y07 237	G	Belt heater	240V 45W			1	1	1	1	P493781X02	<CH11>	
244	R61 414 480	G	Heat exchanger	3L	1		1		1		KB01T300G03		
245	R61 416 480	G	Heat exchanger	3L BS		1		1		1	KB01T300G04		

FUNCTIONAL PARTS

No.	Part No.	G : RoHS Apply Only W : RoHS Apply by Running Change	Part Name	Spec.	PURY-RP200YJM-A	PURY-RP200YJM-A-BS	PURY-RP250YJM-A	PURY-RP250YJM-A-BS	PURY-RP300YJM-A	PURY-RP300YJM-A-BS	Dwg. No.	Notes for the models	Revision info.
246	R63 852 860	G	Rubber mount	For compressor	4	4	4	4	4	4	W897574H01		
247	R61 001 310	G	Sensor holder		1	1	1	1	1	1	KB25B471G02		
248	R63 4H7 402	G	Linear expansion valve coil	CAM	1	1	1	1	1	1	P472058X02	<SLEV>	
249	R63 6A7 245	G	SV tightening element		1	1	1	1	1	1	W909209G01		
250	R61 003 151	G	SV block servise parts kit		1	1	1	1	1	1	KB00H903G05	*4	
251	R61 005 151	G	Service parts	(with instructions)	1	1	1	1	1	1	KB00H903G06	<CV4a,CV6a,CV8a,CV9a,CV10a> *5	

CONTROL BOX PARTS

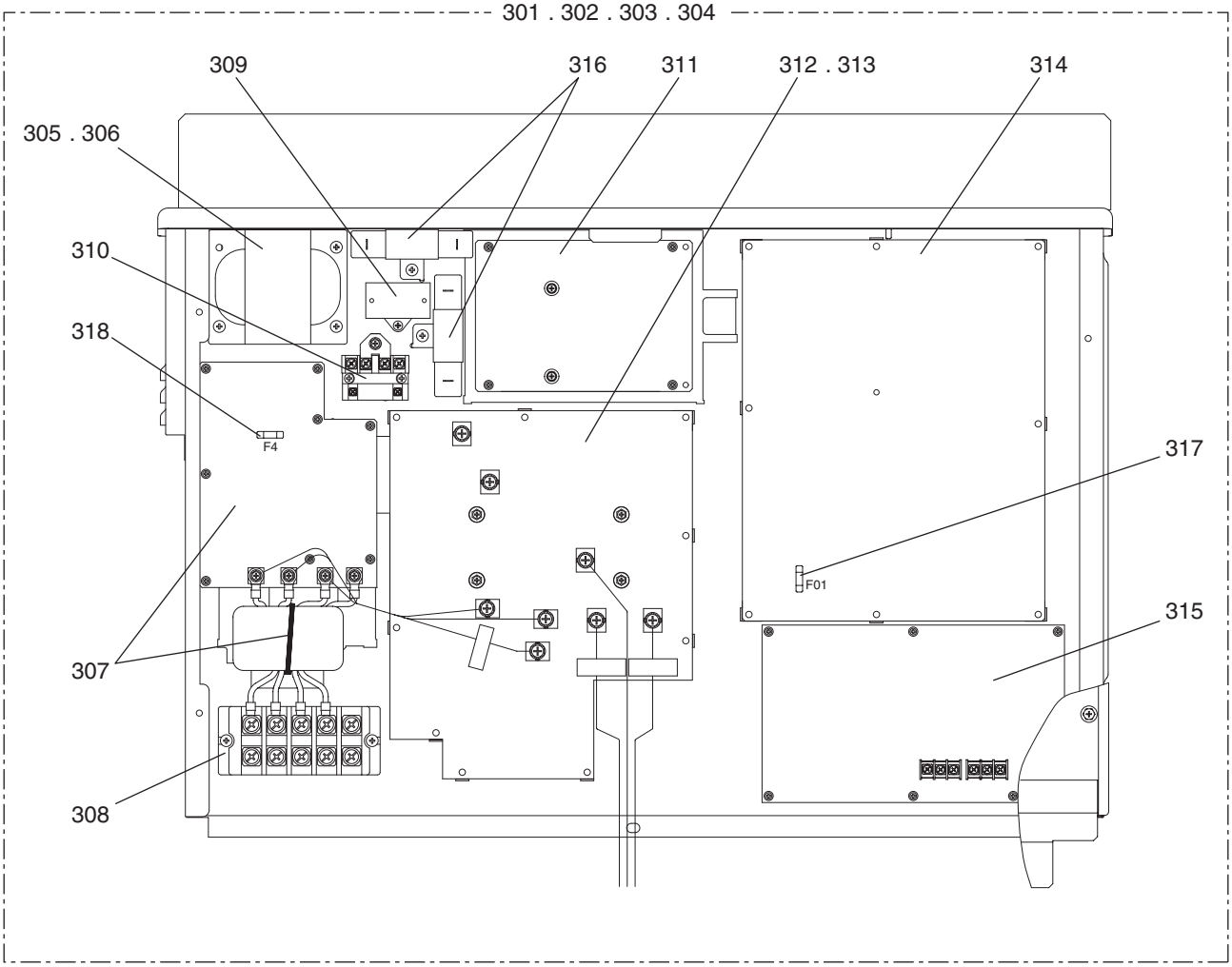

PURY-RP200YJM-A(-BS)
PURY-RP250YJM-A(-BS)
PURY-RP300YJM-A(-BS)

CONTROL BOX PARTS

No.	Part No.	G : RoHS Apply Only W : RoHS Apply by Running Change	Part Name	Spec.	PURY-RP200YJM-A	PURY-RP200YJM-A-BS	PURY-RP250YJM-A	PURY-RP250YJM-A-BS	PURY-RP300YJM-A	PURY-RP300YJM-A-BS	Dwg. No.	Notes for the models	Revision info.
301	R61 320 305	G	Control box	R-RP20YJM	1						KE80C411G29		
302	R61 321 305	G	Control box	R-RP20 BS		1					KE80C411G30		
303	R61 322 305	G	Control box	R-RP25YJM			1		1		KE80C411G31		
304	R61 323 305	G	Control box	R-RP25 BS				1		1	KE80C411G32		
305	R61 010 259	G	Reactor		1	1					P715439X02	<DCL>	
306	R61 011 259	G	Reactor				1	1	1	1	P715440X02	<DCL>	
307	R61 015 293	G	Noise filter		1	1	1	1	1	1	KE80C155G05	<Noise Filter,L>	
308	R61 007 246	G	Terminal block		1	1	1	1	1	1	S436005H12	<TB1>	
309	R61 001 255	G	Capacitor assy		1	1	1	1	1	1	KE00D263G01	<C100>	
310	R61 003 216	G	Relay		1	1	1	1	1	1	P421295X01	<72C>	
311	R61 037 280	G	FAN board		1	1	1	1	1	1	W652171G07		
312	R61 154 280	G	INV board		1	1					KE80C154G09		
313	R61 155 280	G	INV board				1	1	1	1	KE80C154G10		
314	R61 055 281	G	Control board		1	1	1	1	1	1	KE80C153G63		
315	R61 012 281	G	M-NET board		1	1	1	1	1	1	KE80C055G03		
316	R61 001 234	G	Resistor		2	2	2	2	2	2	P411151X01	<R1,R5>	
317	R63 992 964	G	Fuse	3.15A AC250V T	1	1	1	1	1	1	S423001H29		
318	R63 993 964	G	Fuse	6.3A AC250V T	1	1	1	1	1	1	S423001H30		

MITSUBISHI ELECTRIC CORPORATION
HEAD OFFICE: TOKYO BLDG., 2-7-3, MARUNOUCHI, CHIYODA-KU, TOKYO 100-8310, JAPAN

BWE10070 (20100630)