Changes for the Better

SERVICE PARTS LIST FOR MITSUBISHI ELECTRIC PACKAGED AIR-CONDITIONERS

Series PUHY-P-YMF-B

For use with the R407C

REVISED
Jul. 2003

INDEX

P U H Y - P 2 0 0 Y M F - B

P U H Y - P 2 5 0 Y M F - B

MITSUBISHI ELECTRIC

Please change the old catalogs (issued Jul. 2002, No.WP-S-066C) to this new catalog.
Content of revision : The models are added.

PUHY-P200YMF-B
PUHY-P250YMF-B

EXTERNAL PARTS

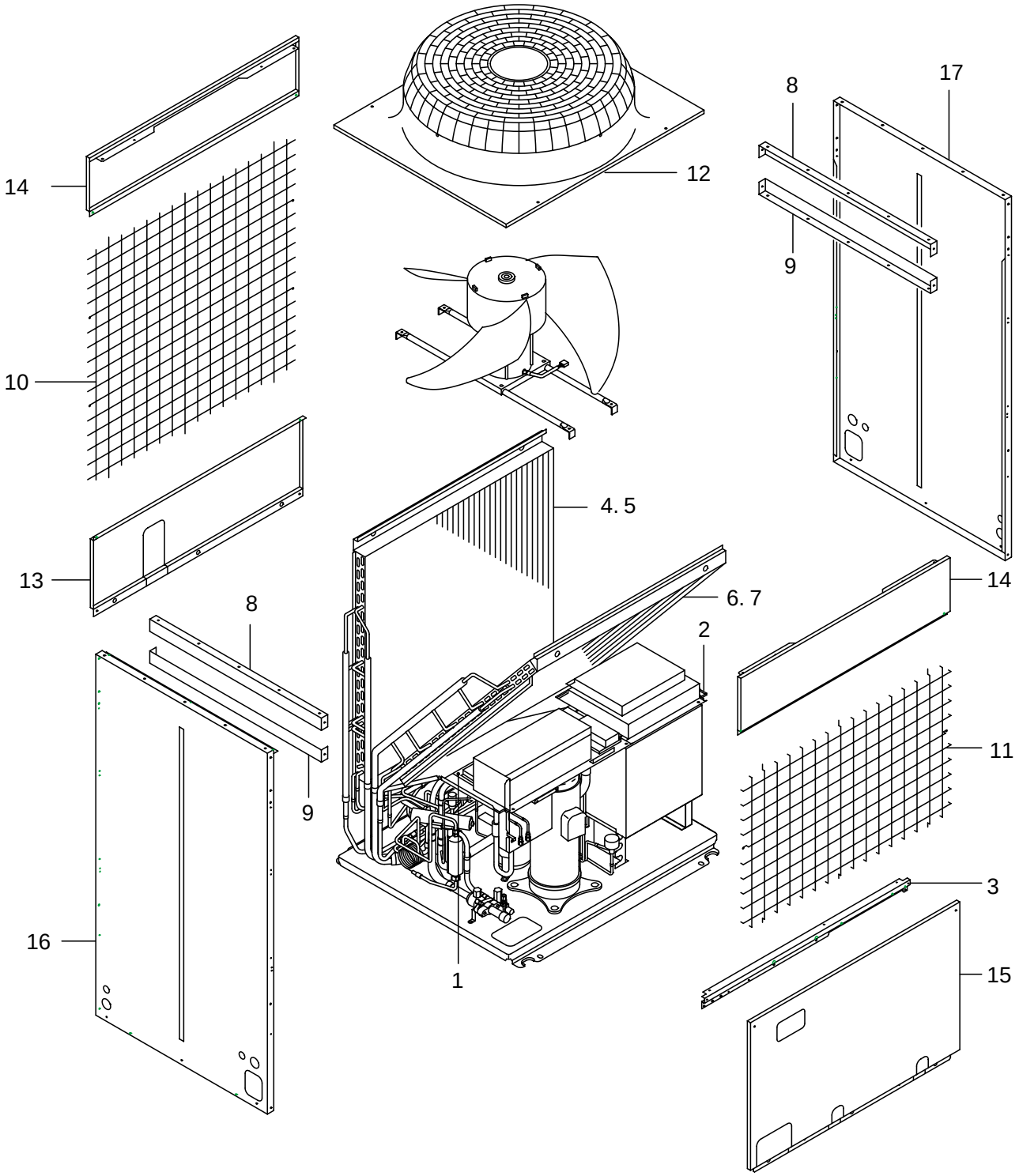

PUHY-P200YMF-B
PUHY-P250YMF-B

EXTERNAL PARTS

No.	Part No.	Part Name	Spec.	-P200YMF-B	-P250YMF-B					Dwg. No.	Price
1	R61 Y03 629	Partition board L ass'y		1	1					W627831G03	
2	R61 Y04 629	Partition board R ass'y		1	1					W627829G05	
3	R61 Y04 659	Front panel		1	1					W627844H02	
4	R61 Y44 480	Heat exchanger B		1						W867011G10	
5	R61 Y46 480	Heat exchanger B			1					W123188G06	
6	R61 H13 409	Heat exchanger F		1						W125262G03	
7	R61 Y45 480	Heat exchanger F			1					W123187G06	
8	R61 A42 669	Reinforcement		2	2					W856128H06	
9	R61 A45 669	Reinforcement ass'y		2	2					W857427G05	
10	R61 A42 638	Guard B ass'y		1	1					W265789G01	
11	R61 E66 611	Guard F ass'y		1	1					W265788G01	
12	R61 A52 118	Fan guard	With the Drum	1	1					W123195G01	
13	R61 M43 677	Panel B ass'y		1	1					W857426G21	
14	R61 L78 653	Panel FU		2	2					W633746H06	
15	R61 Y13 652	Panel F ass'y		1	1					W857425G26	
16	R61 Y10 652	Panel S ass'y(L)		1	1					W625856G18	
17	R61 Y11 652	Panel S ass'y(R)		1	1					W625856G17	

PUHY-P200YMF-B
PUHY-P250YMF-B

FUNCTIONAL PARTS

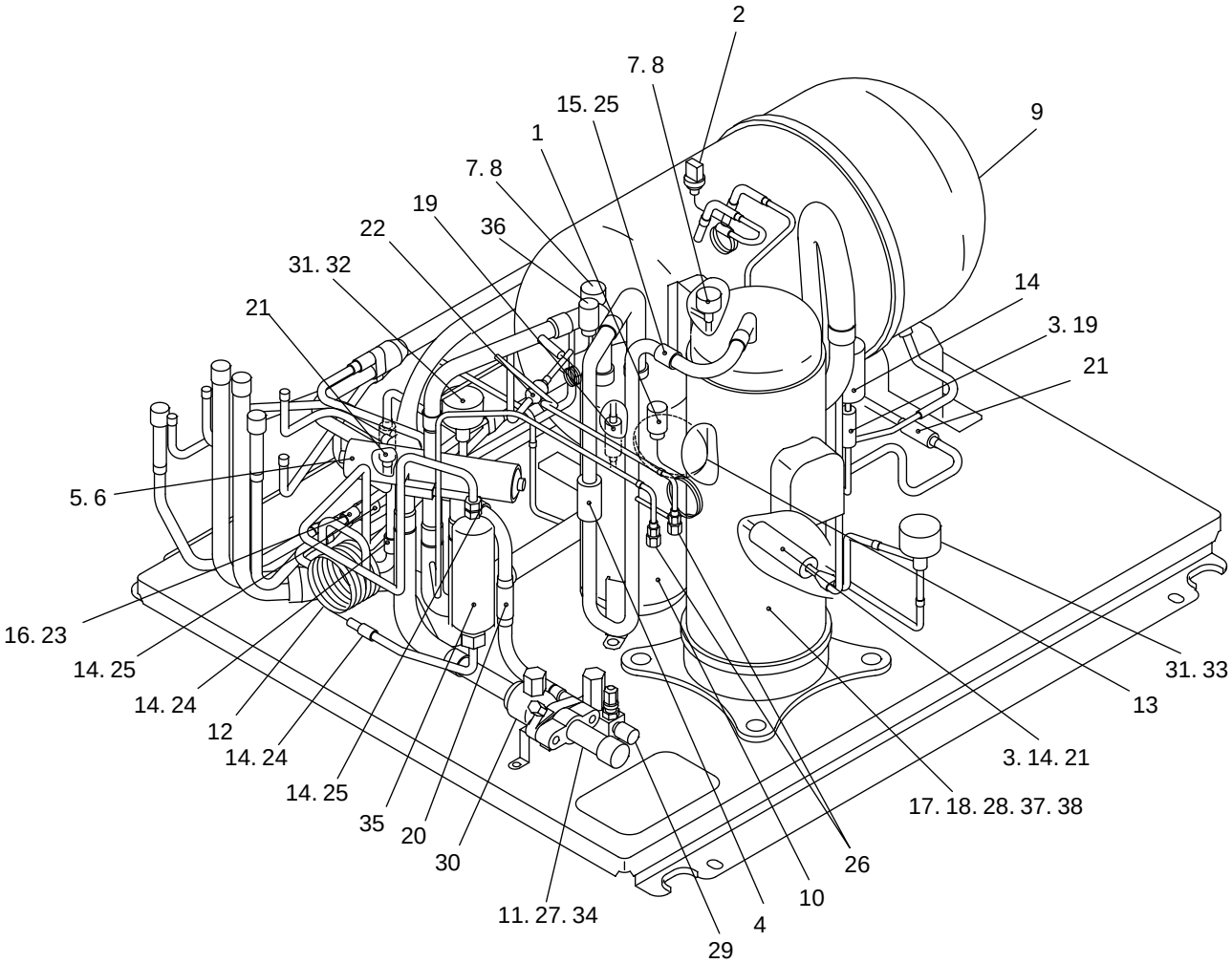

PUHY-P200YMF-B
PUHY-P250YMF-B

FUNCTIONAL PARTS

No.	Part No.	Part Name	Spec.	-P200YMF-B	-P250YMF-B					Dwg. No.	Price
1	R61 Y06 208	Pressure switch	<63H>	1	1					P426258X02	
2	R61 G35 288	Pressure sensor	<63LS>	1	1					P419129X01	
3	R61 Y01 237	Liquid level detecting heater	<CH2,3>	1	1					P493553X02	
4	R61 F14 418	Check valve		1	1					P639130X01	
5	R61 Y02 154	Four way valve	with a coil	1	1					W893224G01	
6	R61 Y10 242	Four way valve coil	<21S4>	1	1					W893225G01	
7	R61 435 232	Solenoid valve	NEV-202DXF	2	2					P631807X02	
8	R61 Y04 243	Solenoid valve coil	NEV,<SV1,2>	2	2					P631205X01	
9	R61 Y03 110	Accumulator ass'y		1	1					W266549G02	
10	R61 Y05 487	Oil separator ass'y		1	1					W266571G01	
11	R61 E90 494	Pipe ass'y		1						W619465G04	
12	R61 F14 426	Capillary tube processing		2	2					W864252G01	
13	R61 F14 425	Capillary tube ass'y		1	1					W864233G01	
14	R61 670 202	Thermistor	NTH3A14	7	7					P425496X01	
15	R61 671 202	Thermistor	<TH1>	1	1					P425439X01	
16	R61 F14 200	Thermistor	<TH2>	1	1					P425565X01	
17	R61 375 200	Thermistor	<TH10>	1	1					P425438X01	
18	R69 963 478	Scroll compressor	HEV92FA1-YB,<MC>	1	1					EP10013G08	
19	R61 155 454	Strainer	6.35D	2	2					W882822G01	
20	R61 Y02 454	Strainer		1	1					W858399G02	
21	R61 A42 454	Strainer	9.52D	3	3					W882823G01	
22	R61 376 454	Strainer		1	1					P643206X01	
23	R61 A42 287	Sensor cover	EVA,6.35D	1	1					P227170X01	
24	R61 A45 287	Sensor cover	EVA,12.7D	2	2					P227171X01	
25	R61 A43 287	Sensor cover	EVA,16D	2	2					P227172X01	
26	R61 F14 413	Check joint		2	2					P639131X01	
27	R61 F14 514	Packing	T/# 1991-NF	1	1					P321009X01	
28	R61 Y08 262	Belt heater	240V 45W,<CH1>	1	1					P493642X02	
29	R61 F14 410	Ball valve	1/2	1	1					P636220X01	
30	R61 F14 411	Ball valve	1frange	1	1					P636219X02	
31	R61 G48 401	Linear expansion valve		2	2					P632342X01	
32	R61 A45 401	Linear expansion valve coil	LEV1	1	1					P632299X01	
33	R61 A45 402	Linear expansion valve coil	SLEV	1	1					P632298X01	
34	R61 E91 494	Pipe ass'y			1					W619465G05	
35	R61 M43 405	Dryer	9.52X12.7	1	1					W894128G02	
36	R61 331 288	Pressure sensor	<63HS>	1	1					P419110X01	
37	R61 Y01 850	Insulator		1	1					W628447H02	
38	R61 Y02 850	Insulator		1	1					W861746H02	

No. : For use with R407C

PUHY-P200YMF-B
PUHY-P250YMF-B

NOISE FILTER PARTS

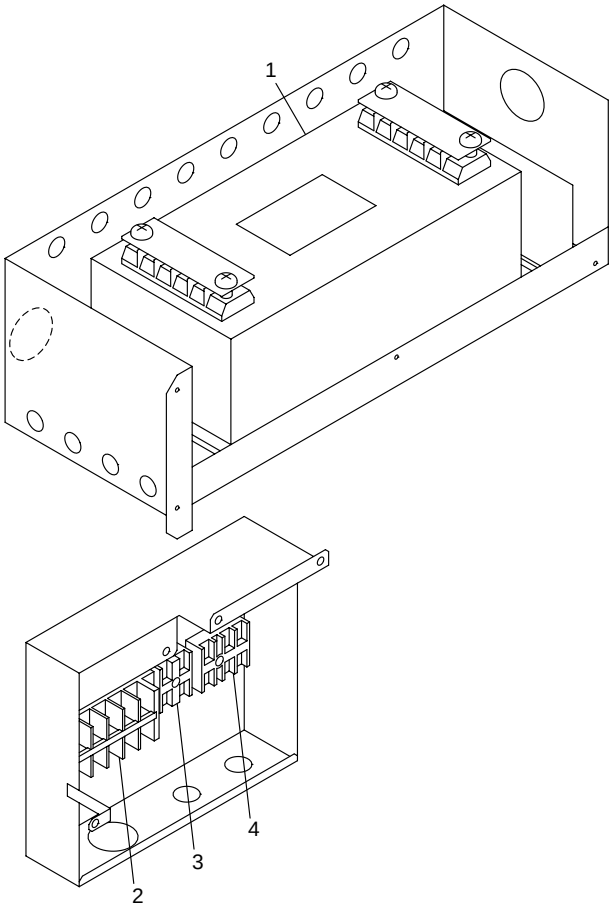

No.	Part No.	Part Name	Spec.	-P200YMF-B	-P250YMF-B					Dwg. No.	Price
1	R61 Y05 293	NF	VF4030C-MX2	1	1					W638330G01	
2	R61 Y02 246	Terminal bed for LVD		1	1					P436135X01	
3	R61 435 246	Terminal bed		1	1					A73S950H02	
4	R61 336 247	Terminal bed		1	1					P436113X02	

PUHY-P200YMF-B
PUHY-P250YMF-B

BLOWER PARTS

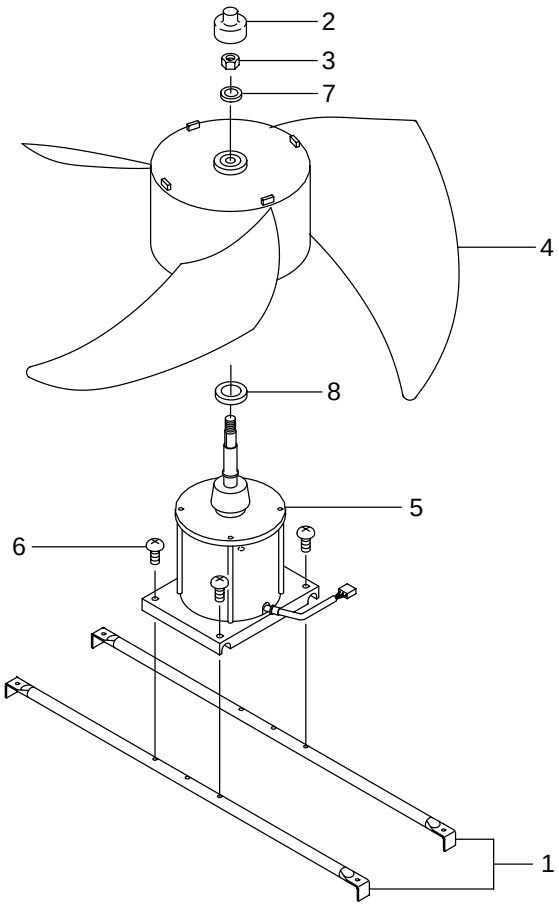

No.	Part No.	Part Name	Spec.	-P200YMF-B	-P250YMF-B					Dwg. No.	Price
1	R61 A42 140	Fan stand		2	2					W856127G05	
2	R61 A69 086	Cap		1	1					P221056X01	
3	R61 A42 122	Nut 16		1	1					P541016X01	
4	R61 E66 115	Propeller fan	750D	1	1					W872619G01	
5	R61 Y84 220	Motor	NFS-3508J1<MF>	1	1					P714535X03	
6	R61 E90 087	Screw	6X14	4	4					P521020X01	
7	R61 A42 136	Washer	17X32	1	1					P562006X01	
8	R61 A45 136	Washer	20.5X40	1	1					P562007X01	

PUHY-P200YMF-B
PUHY-P250YMF-B

CONTROL BOX PARTS

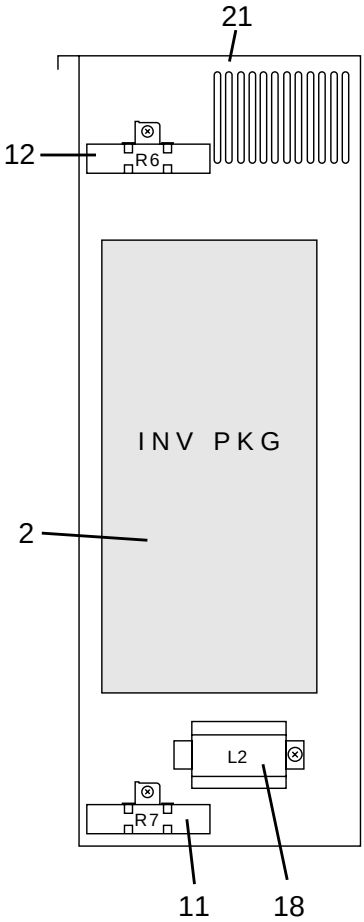

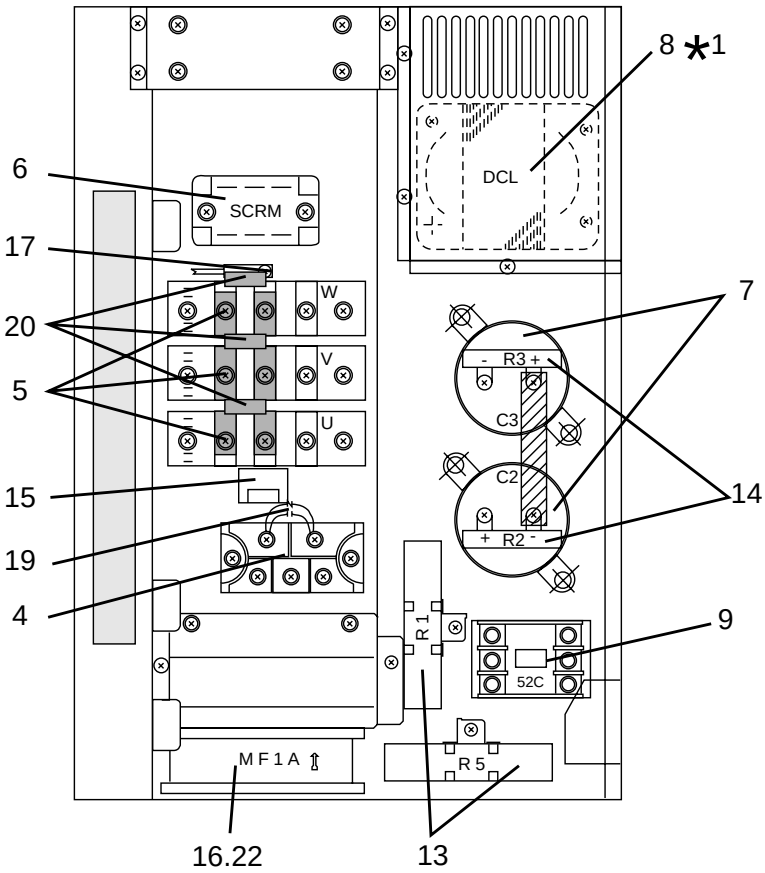

*1: It may be needed to process the hole for attaching parts into the metal plate of Control box.

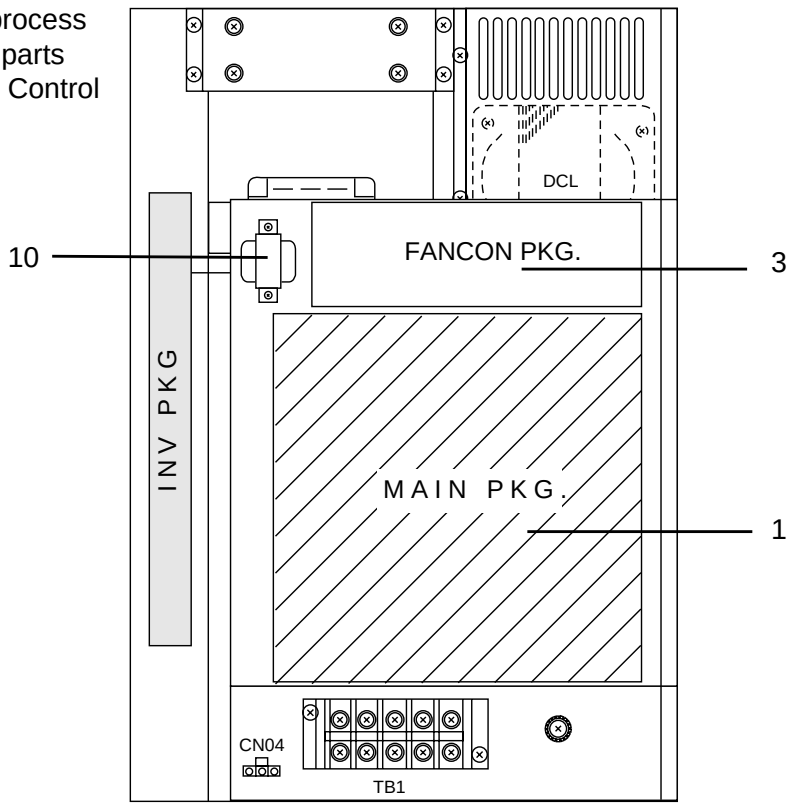

PUHY-P200YMF-B
PUHY-P250YMF-B

CONTROL BOX PARTS

No.	Part No.	Part Name	Spec.	-P200YMF-B	-P250YMF-B					Dwg. No.	Price
1	R61 Y52 280	Main board	PYMFB	1	1					W266235G05	
2	R61 Y32 280	INV board		1	1					P718386X01	
3	R61 Y47 280	Fan controller board		1	1					W629556G01	
4	R61 Y10 320	Diode	6RI75G-160	1	1					W876941G04	
5	R61 Y13 320	Transistor	2DI75M-120	3	3					W848413G08	
6	R61 Y07 320	Silicon controlled rectifiers	PFB15AA120	1	1					S414032H01	
7	R61 Y18 252	Condenser	400WV,4700μF<C2,3>	2	2					P412265X01	
*1 8	R61 Y01 259	Reactor	1.92mH/34A<DCL>	1	1					P419149X01	
9	R61 Y19 225	Magnet contactor	S-N18,AC230V<52C>	1	1					S427017H31	
10	R61 Y14 260	Transformer	240V/40V <T1>	1	1					P715302X01	
11	R61 670 234	Resistor	30W,22Ω <R7>	1	1					P411113X01	
12	R61 E69 234	Resistor	40W,110Ω <R6>	1	1					P411131X01	
13	R61 Y05 234	Resistor	40W,5kΩ <R1,5>	2	2					P411133X01	
14	R61 Y02 234	Resistor	10W,33kΩ,pitch=32<R2,3>	2	2					P411126X01	
15	R61 A42 289	DCCT	HC-TN131V42XP12F	1	1					P419079X02	
16	R61 Y02 300	Fan	109S025UL<MF1>	1	1					P712360X01	
17	R61 F14 201	Thermistor	181-503-97151	1	1					P414095X01	
18	R61 Y02 244	Choke coil	1A,30mH	1	1					P419121X01	
19	R61 L85 252	ZNR+C		1	1					W886345G01	
20	R61 Y11 252	Condenser	<C14,15,16>	3	3					W889943G01	
21	R61 Y01 305	Control box		1	1					W266239G02	
22	R61 Y03 300	Fan cord		1	1					W889948G01	

MITSUBISHI ELECTRIC CORPORATION
HEAD OFFICE: MITSUBISHI DENKI BLDG. , 2-2-3, MARUNOUCHI, CHIYODA-KU, TOKYO 100-8310, JAPAN

BWE0363Z(20030731)