Changes for the Better

SERVICE PARTS LIST FOR MITSUBISHI ELECTRIC PACKAGED AIR-CONDITIONERS

Series PUHY

REVISED
Sep. 2004

INDEX

PUHY-200YMA
PUHY-250YMA

MITSUBISHI ELECTRIC

Please change the old catalogs (issued Aug. 2003, No.BWE0355Z) to this new catalog.
Content of revision : Some parts are changed.

PUHY-200YMA
PUHY-250YMA

EXTERNAL PARTS

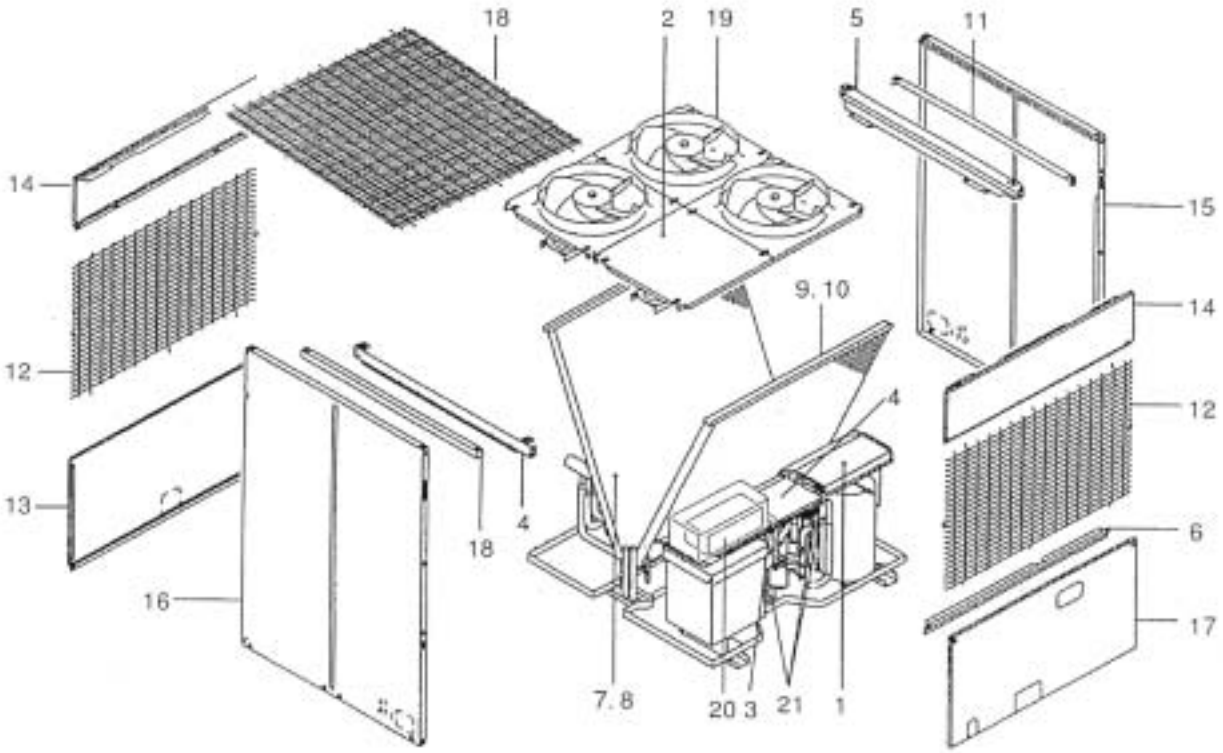

PUHY-200YMA
PUHY-250YMA

EXTERNAL PARTS

No.	Part No.	Part Name	Spec.	-200YMA	-250YMA					Dwg. No.	Price
1	R61 849 667	Compressor cover		1	1					W398256G01	
2	R61 907 499	Block board U ass'y		1						W814351G01	
3	R61 Y01 629	Partition board ass'y 1		1	1					W620431G01	
4	R61 Y02 629	Partition board ass'y 2		1	1					W856966G01	
5	R61 849 668	Support frame		2	2					W374342G01	
6	R61 352 659	Front panel		1	1					W374346H13	
7	R61 Y06 480	Heat exchanger B		1						W118383G08	
8	R61 184 481	Heat exchanger B			1					W118387G08	
9	R61 Y07 480	Heat exchanger F		1						W118384G14	
10	R61 A41 408	Heat exchanger F			1					P734412X01	
11	R61 849 669	Reinforcement SU		2	2					W374350G01	
12	R61 562 611	Guard ass'y		2	2					W255022G01	
13	R61 595 677	Panel B		1	1					W374352G02	
14	R61 562 677	Panel FU		2	2					W240974G03	
15	R61 595 661	Panel SR		1	1					W241003G04	
16	R61 595 662	Panel SL		1	1					W240970G06	
17	R61 696 652	Panel F ass'y		1	1					W825221G01	
18	R61 562 118	Fan guard ass'y		1	1					W255023G01	
19	R12 801 118	Bell mouth ass'y		3	4					W814320G02	
20	R61 Y02 293	NF	HF4030C-MX	1	1					P419089X01	
21	R61 Y01 015	Troidal ferrite cramp		6	6					P419042X01	

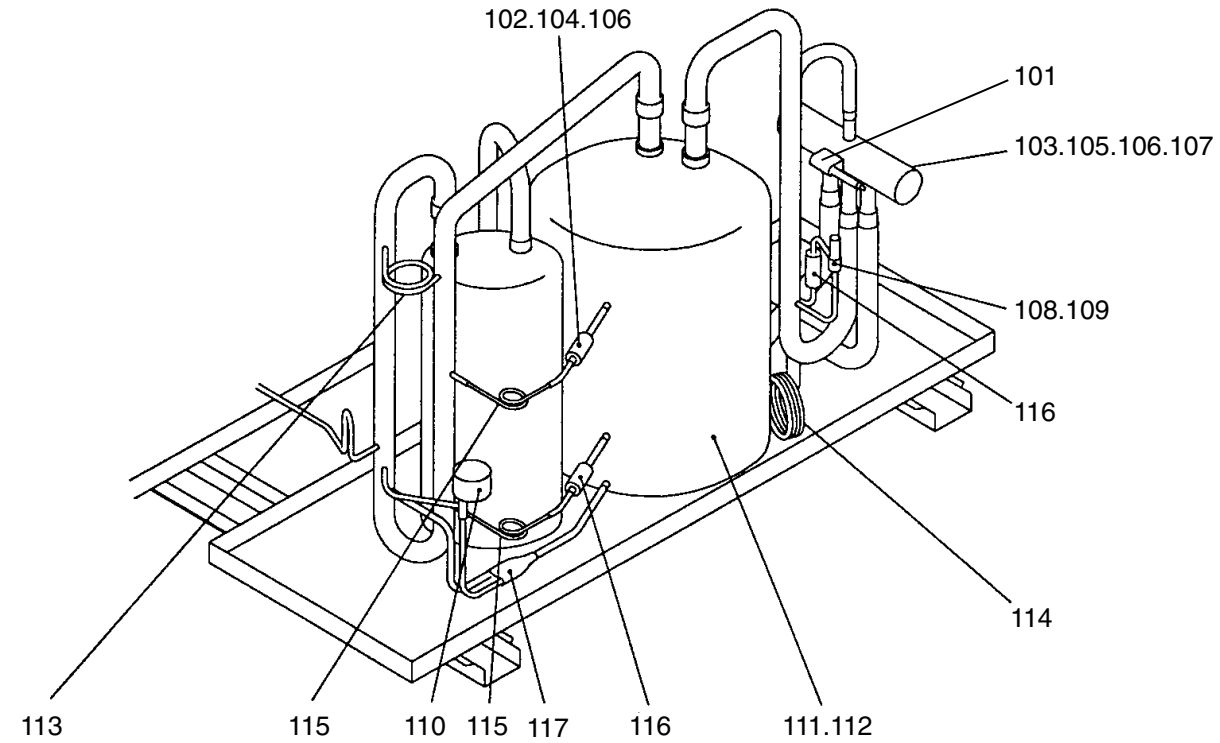
102.104.106
101
103.105.106.107
108.109
116
114
113
115
110
115
117
116
111.112

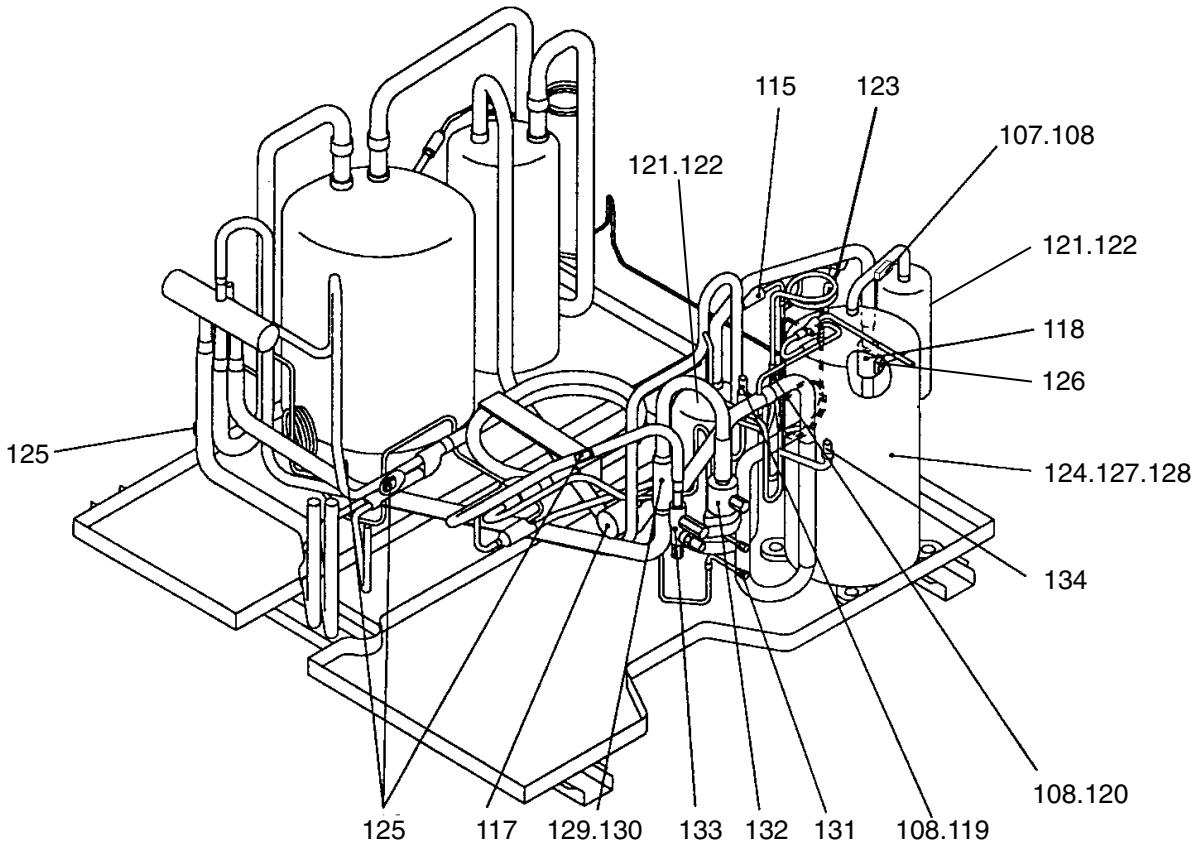
115
123
107.108
121.122
121.122
118
126
125
124.127.128
134
108.120
125
117
129.130
133
132
131
108.119

PUHY-200YMA
PUHY-250YMA

FUNCTIONAL PARTS

No.	Part No.	Part Name	Spec.	-200YMA	-250YMA					Dwg. No.	Price
101	R61 Y01 237	Liquid level detecting heater ass'y		1	1					P493553X02	
102	R61 315 403	Four way valve		1						P633057X01	
103	R61 Y01 403	Four way valve			1					P633077X01	
104	R61 Y03 242	Four way valve coil		1						P633078X01	
105	R61 Y06 242	Four way valve coil			1					P633097X01	
106	R61 376 086	Cap		2	2					P221053X01	
107	R61 A33 232	Solenoid valve	NEV-202DXF	2	2					P631191X01	
108	R61 Y04 243	Solenoid valve coil		4	4					P631205X01	
109	R61 375 401	Expansion valve	EDM-402	1	1					P632290X01	
110	R61 A38 484	Accumulator ass'y	Equipped with socket.	1						W247238G17	
111	R61 A39 484	Accumulator ass'y	Equipped with socket.		1					W247238G18	
112	R61 970 425	Capillary tube		1	1					W825207H01	
113	R61 376 428	Capillary tube processing	0.8Dx2.4Dx2000	1	1					W849312G01	
114	R61 971 425	Capillary tube processing	1.0Dx3Dx200	2	2					W846301G01	
115	R61 155 454	Strainer		4	4					P643209X01	
116	R61 596 454	Strainer		1	1					W817243H01	
117	R61 375 402	Linear expansion valve	EDM-402	1	1					P632291X01	
118	R61 436 418	Check valve	EGV-S55A	1	1					P639808X01	
119	R61 435 232	Solenoid valve	NEV-202DXF	1	1					P631807X02	
120	R61 670 232	Solenoid valve	NEVL-202DXF	1	1					P631148X01	
121	R61 799 487	Oil separator		1						P643101X06	
122	R61 800 487	Oil separator			1					P643103X05	
123	R61 A32 425	Capillary tube processing	1Dx3Dx1000	1	1					W849327G01	
124	R61 Y01 236	Crankcase heater	220V 62W	1	1					P493552X01	
125	R61 670 202	Thermistor	NTH3A14	7	7					P425496X01	
126	R61 375 200	Thermistor (Discharge)	Wire length 1700	1	1					P425438X01	
127	R69 959 478	Scroll compressor	ZHY083FAB-Y1	1						RF11521G12	
128	R69 961 478	Scroll compressor	ZHY117FAB-Y1		1					RF11525G18	
129	R60 272 405	Strainer	For ø22.2	1						R48K373G84	
130	R61 694 454	Strainer	For ø25.4		1					W826648G01	
131	R61 800 413	Charging plug		2	2					A50U666H04	
132	R61 411 410	Ball valve	1flange	1	1					S636001H02	
133	R61 694 410	Ball valve	1/2	1	1					P636175X01	
134	R61 331 288	Pressure sensor	YSKBA30L024	1	1					P419110X01	

CONTROL BOX PARTS

PUHY-200YMA

★1: It may be needed to process the hole for attaching parts into the metal plate of Control box.

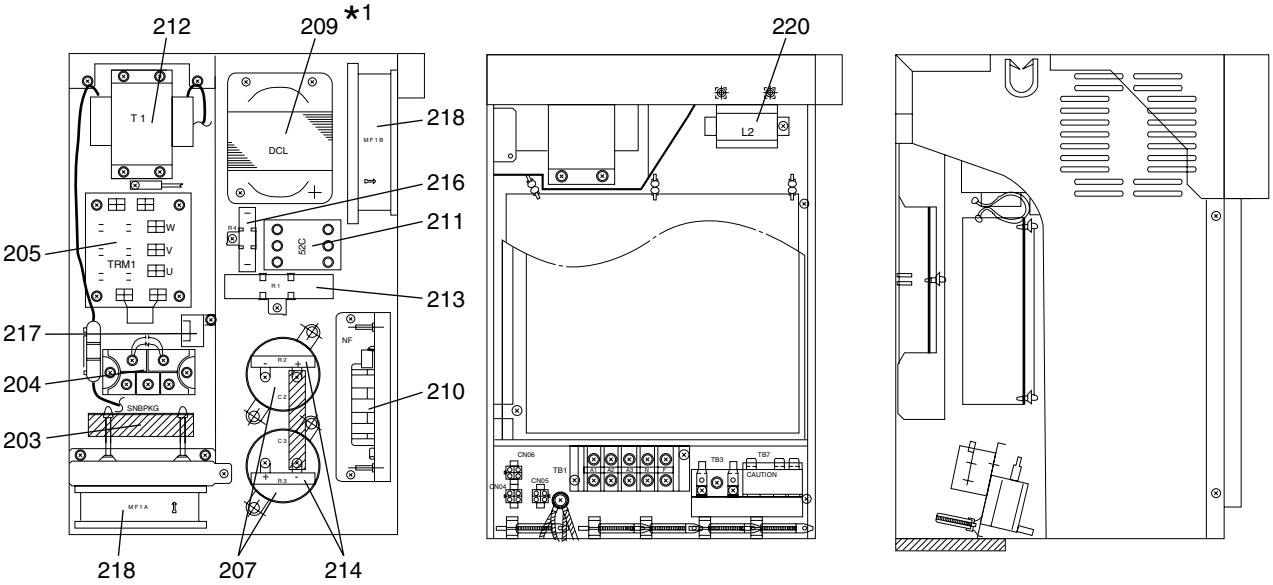

PUHY-250YMA

★1: It may be needed to process the hole for attaching parts into the metal plate of Control box.

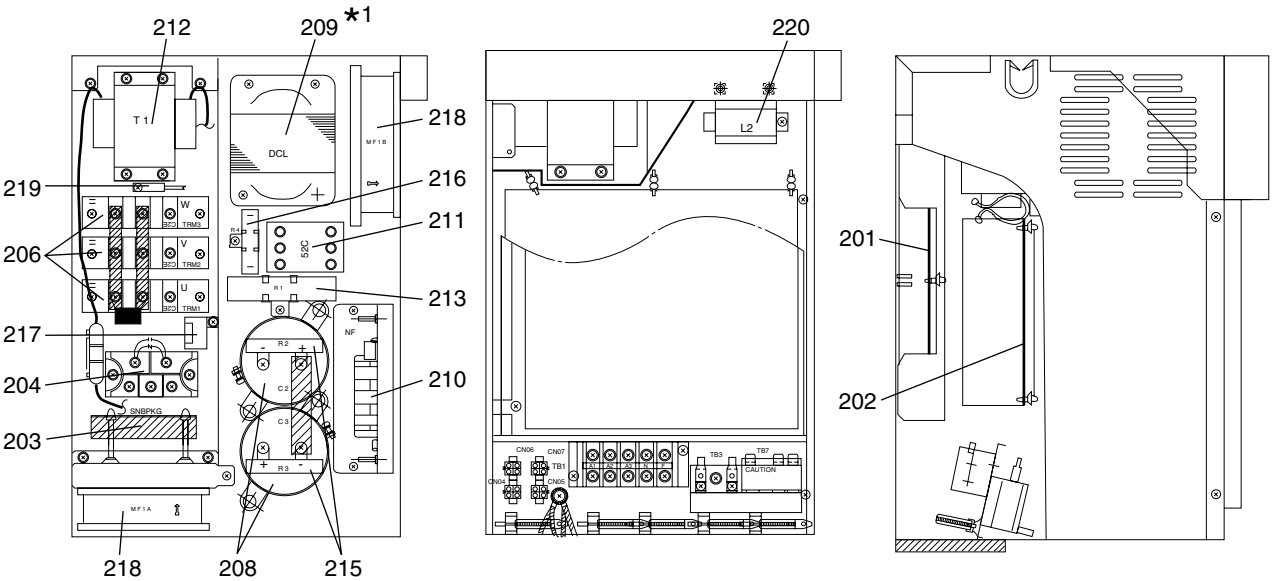

This page was revised in September,2004.

PUHY-200YMA
PUHY-250YMA

CONTROL BOX PARTS

No.	Part No.	Part Name	Spec.	-200YMA	-250YMA					Dwg. No.	Price
201	R61 Y02 281	Controller board		1	1					P718205X06	
202	R61 Y02 282	B/A board		1	1					P718210X01	
203	R61 A32 281	Arrest board		1	1					P718175X01	
204	R61 Y11 320	Diode		1	1					W876941G05	
205	R61 Y14 320	Transistor		1						W848413G09	
206	R61 Y13 320	Transistor			3					W848413G08	
207	R61 Y04 252	Condenser	400WV 2200μF	2						P412167X01	
208	R61 Y02 252	Condenser	400WV 3300μF		2					P412168X01	
209	R61 Y04 259	Reactor	1.92mH	1	1					P715381X01	
210	R61 Y01 293	Noise filter		1	1					P716034X01	
211	R61 Y01 225	Magnet contactor		1	1					P427135X01	
212	R61 A32 260	Transformer	240V/210V	1	1					P715244X01	
213	R61 Y01 234	Resistor	30W 47Ω	1	1					P411123X01	
214	R61 Y04 234	Resistor	10W 33kΩ	2						P411124X01	
215	R61 Y02 234	Resistor	10W 33kΩ		2					P411126X01	
216	R61 Y03 234	Resistor	20W 180kΩ	1	1					P411125X01	
217	R61 670 261	DC-CT		1	1					P419031X01	
218	R61 Y02 114	Fan		2	2					P712181X01	
219	R61 375 200	Thermistor		1	1					P425438X01	
220	R61 399 244	Choke coil	1A 30mH	1	1					P419072X01	

This page was revised in September,2004.

PUHY-200YMA
PUHY-250YMA

BLOWER PARTS

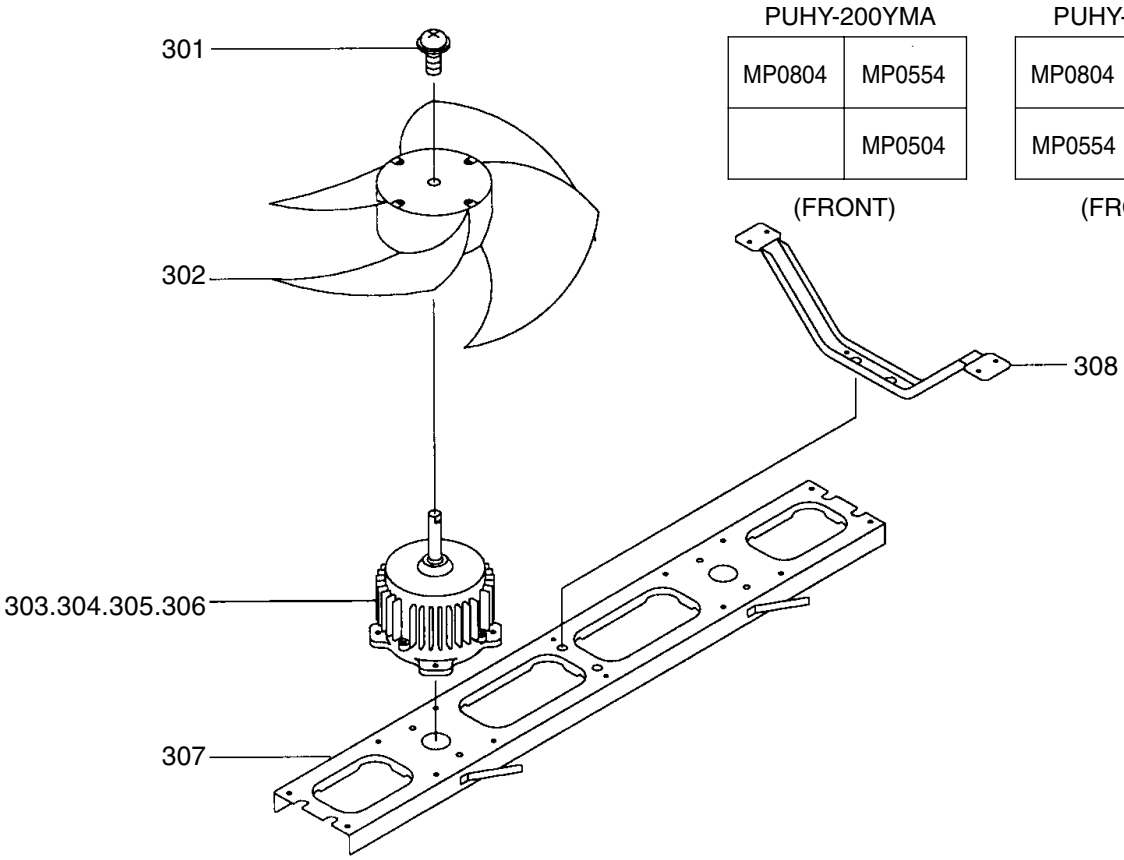

No.	Part No.	Part Name	Spec.	-200YMA	-250YMA					Dwg. No.	Price
301	R61 Y01 122	Fan set screw		3	4					P517000X01	
302	R11 942 942	Propeller fan	400D	3	4					W122507G02	
303	R61 Y04 221	Motor	MP0804	1	1					P714036X01	
304	R61 Y05 221	Motor	MP0554	1	2					P714038X01	
305	R61 Y07 221	Motor	MP0504	1						P714039X01	
306	R61 Y06 221	Motor	MP0654		1					P714037X01	
307	R61 849 130	Motor support		2	2					W240972G01	
308	R61 562 130	Support leg		2	2					W374343H01	

MITSUBISHI ELECTRIC CORPORATION
HEAD OFFICE: MITSUBISHI DENKI BLDG. , 2-2-3, MARUNOUCHI, CHIYODA-KU, TOKYO 100-8310, JAPAN

BWE0355Z(20040930)