SERVICE PARTS LIST FOR MITSUBISHI ELECTRIC PACKAGED AIR-CONDITIONERS

Series PUHY-YMF-B(-BS)
PUHY-YMF-C(-BS, -BF, -BFA)

REVISED
Mar. 2003

INDEX

PUHY-400YMF-B
PUHY-500YMF-B
PUHY-400YMF-B-BS
PUHY-500YMF-B-BS
PUHY-400YMF-C
PUHY-500YMF-C
PUHY-400YMF-C-BS
PUHY-500YMF-C-BS
PUHY-400YMF-C-BF
PUHY-500YMF-C-BF
PUHY-400YMF-C-BFA
PUHY-500YMF-C-BFA

MITSUBISHI ELECTRIC

Please change the old catalogs (issued Apr. 2002, No.WP-S-112D) to this new catalog.
Content of revision : The models are added and some of parts are changed.

PUHY-400YMF-B(-BS)
PUHY-500YMF-B(-BS)
PUHY-400YMF-C(-BS,-BF,-BFA)
PUHY-500YMF-C(-BS,-BF,-BFA)

EXTERNAL PARTS

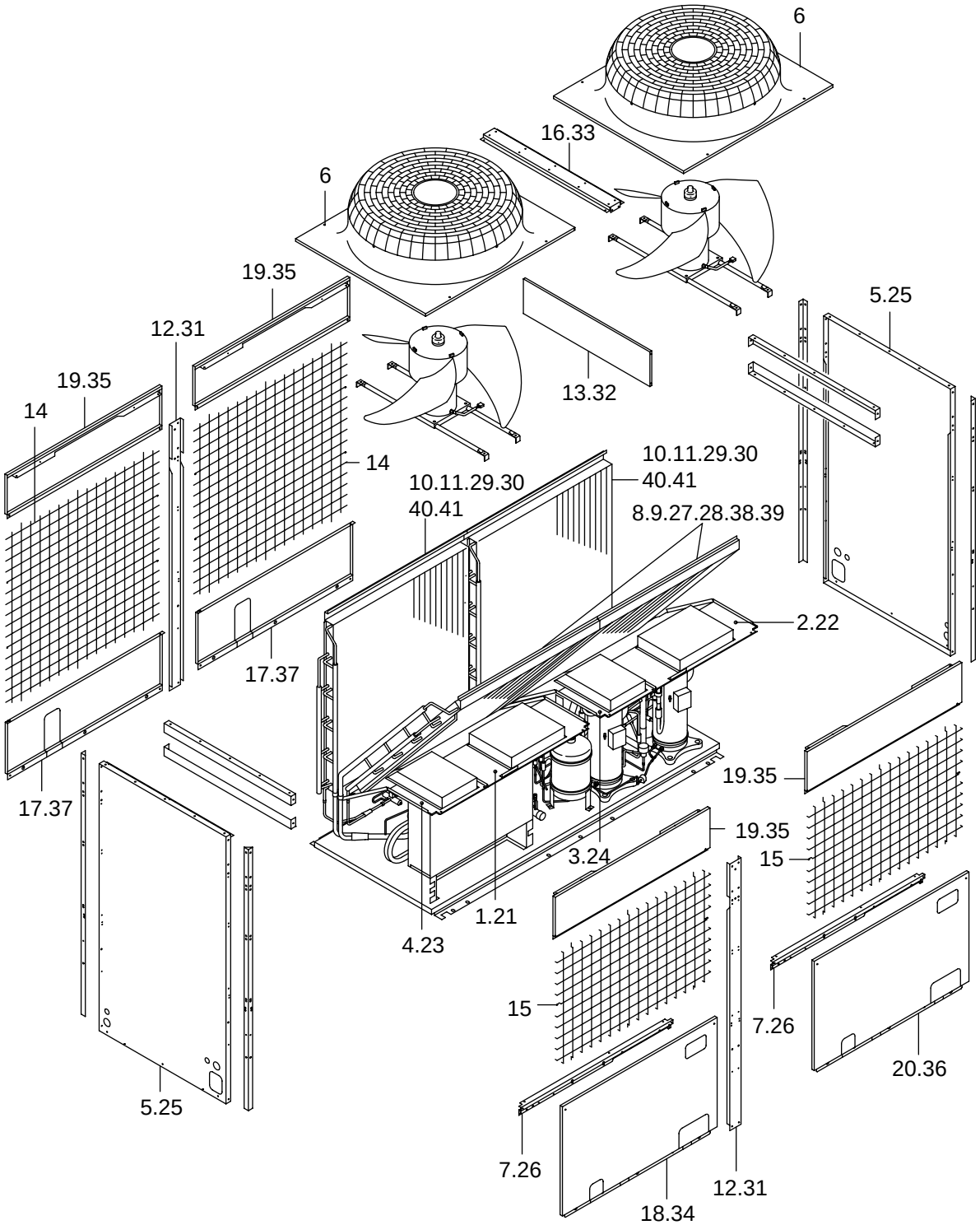

PUHY-400YMF-B(-BS)
PUHY-500YMF-B(-BS)

EXTERNAL PARTS

No.	Part No.	Part Name	Spec.	-400YMF-B	-500YMF-B	-400YMF-B-BS	-500YMF-B-BS			Dwg. No.	Price
1	R61 E66 667	Partition board R ass'y	(L)	1	1					W624525G15	
2	R61 E66 668	Partition board R ass'y	(R)	1	1					W624525G16	
3	R61 E66 657	Partition board L ass'y	(R)	1	1					W624526G22	
4	R61 E66 658	Partition board L ass'y	(L)	1	1					W624526G20	
5	R61 N78 661	Nut 16		2	2					W272421H01	
6	R61 A52 118	Fan guard	With the Drum	2	2	2	2			W123195G01	
7	R61 A42 659	Front panel		2	2					W615888H18	
8	R61 Y85 480	Heat exchanger ass'y F	400YMF-B	2						W265757G22	
9	R61 Y50 480	Heat exchanger ass'y F	500YMF-B		2					W265759G31	
10	R61 Y47 480	Heat exchanger ass'y B	400YMF-B	2						W265760G20	
11	R61 Y48 480	Heat exchanger ass'y B	500YMF-B		2					W265761G30	
12	R61 E66 627	Stay M		2	2					W623717G07	
13	R61 E66 674	Reinforcement M		1	1					W861182H01	
14	R61 A42 638	Guard B ass'y		2	2	2	2			W265789G01	
15	R61 E66 611	Guard F ass'y		2	2	2	2			W265788G01	
16	R61 E66 125	Beam M		1	1					W623718G01	
17	R61 M43 677	Panel B ass'y		2	2					W857426G21	
18	R61 Y15 652	Panel F		1	1					W623719H09	
19	R61 L78 653	Panel FU		4	4					W633746H06	
20	R61 M54 652	Panel F ass'y		1	1					W862323G07	
21	R61 E67 667	Partition board R ass'y	(L)			1	1			W624525G11	
22	R61 E67 668	Partition board R ass'y	(R)			1	1			W624525G14	
23	R61 E67 658	Partition board L ass'y	(L)			1	1			W624526G14	
24	R61 E67 657	Partition board L ass'y	(R)			1	1			W624526G19	
25	R61 N78 662	Panel S				2	2			W272421G02	
26	R61 A43 659	Front panel				2	2			W615888G09	
27	R61 G48 481	Heat exchanger ass'y F	400YMF-B-BS			2				W265757G26	
28	R61 G50 481	Heat exchanger ass'y F	500YMF-B-BS				2			W265759G37	
29	R61 G48 480	Heat exchanger ass'y B	400YMF-B-BS			2				W265760G23	
30	R61 G50 480	Heat exchanger ass'y B	500YMF-B-BS				2			W265761G35	
31	R61 E67 627	Stay M				2	2			W623717G08	
32	R61 E68 674	Reinforcement M				1	1			W861182G02	
33	R61 E67 125	Beam M				1	1			W623718G03	
34	R61 Y19 652	Panel F				1	1			W623719G12	
35	R61 N78 653	Panel FU				4	4			W633746G06	
36	R61 M55 652	Panel F ass'y				1	1			W862323G09	
37	R61 M44 677	Panel B ass'y				2	2			W857426G28	

PUHY-400YMF-C(-BS,-BF,-BFA) EXTERNAL PARTS
PUHY-500YMF-C(-BS,-BF,-BFA)

No.	Part No.	Part Name	Spec.	-400YMF-C	-500YMF-C	-400YMF-C-BS	-500YMF-C-BS	-400YMF-C-BF	-500YMF-C-BF	-400YMF-C-BFA	-500YMF-C-BFA			Dwg. No.	Price
1	R61 E66 667	Partition board R ass'y	(L)	1	1			1	1	1	1			W624525G15	
2	R61 E66 668	Partition board R ass'y	(R)	1	1			1	1	1	1			W624525G16	
3	R61 E66 657	Partition board L ass'y	(R)	1	1			1	1	1	1			W624526G22	
4	R61 E66 658	Partition board L ass'y	(L)	1	1			1	1	1	1			W624526G20	
5	R61 N78 661	Nut 16		2	2			2	2	2	2			W272421H01	
6	R61 A52 118	Fan guard	With the Drum	2	2	2	2	2	2	2	2			W123195G01	
7	R61 A42 659	Front panel		2	2			2	2	2	2			W615888H18	
8	R61 Y85 480	Heat exchanger ass'y F	400YMF-C	2										W265757G22	
9	R61 Y50 480	Heat exchanger ass'y F	500YMF-C		2									W265759G31	
10	R61 Y47 480	Heat exchanger ass'y B	400YMF-C	2										W265760G20	
11	R61 Y48 480	Heat exchanger ass'y B	500YMF-C		2									W265761G30	
12	R61 E66 627	Stay M		2	2			2	2	2	2			W623717G07	
13	R61 E66 674	Reinforcement M		1	1			1	1	1	1			W861182H01	
14	R61 A42 638	Guard B ass'y		2	2	2	2	2	2	2	2			W265789G01	
15	R61 E66 611	Guard F ass'y		2	2	2	2	2	2	2	2			W265788G01	
16	R61 E66 125	Beam M		1	1			1	1	1	1			W623718G01	
17	R61 M43 677	Panel B ass'y		2	2			2	2	2	2			W857426G21	
18	R61 Y15 652	Panel F		1	1			1	1	1	1			W623719H09	
19	R61 L78 653	Panel FU		4	4			4	4	4	4			W633746H06	
20	R61 M54 652	Panel F ass'y		1	1			1	1	1	1			W862323G07	
21	R61 E67 667	Partition board R ass'y	(L)			1	1							W624525G11	
22	R61 E67 668	Partition board R ass'y	(R)			1	1							W624525G14	
23	R61 E67 658	Partition board L ass'y	(L)			1	1							W624526G14	
24	R61 E67 657	Partition board L ass'y	(R)			1	1							W624526G19	
25	R61 N78 662	Panel S				2	2							W272421G02	
26	R61 A43 659	Front panel				2	2							W615888G09	
27	R61 G48 481	Heat exchanger ass'y F	400YMF-C-BS			2								W265757G26	
28	R61 G50 481	Heat exchanger ass'y F	500YMF-C-BS				2							W265759G37	
29	R61 G48 480	Heat exchanger ass'y B	400YMF-C-BS			2								W265760G23	
30	R61 G50 480	Heat exchanger ass'y B	500YMF-C-BS				2							W265761G35	
31	R61 E67 627	Stay M				2	2							W623717G08	
32	R61 E68 674	Reinforcement M				1	1							W861182G02	
33	R61 E67 125	Beam M				1	1							W623718G03	
34	R61 Y19 652	Panel F				1	1							W623719G12	
35	R61 N78 653	Panel FU				4	4							W633746G06	
36	R61 M55 652	Panel F ass'y				1	1							W862323G09	
37	R61 M44 677	Panel B ass'y				2	2							W857426G28	
38	R61 Y75 480	Heat exchanger ass'y F	400YMF-C-BF(A)					2		2				W265757G27	
39	R61 Y76 480	Heat exchanger ass'y F	500YMF-C-BF(A)						2		2			W265759G38	
40	R61 Y77 480	Heat exchanger ass'y B	400YMF-C-BF(A)					2		2				W265760G24	
41	R61 Y78 480	Heat exchanger ass'y B	500YMF-C-BF(A)						2		2			W265761G36	

PUHY-400YMF-B(-BS)
PUHY-500YMF-B(-BS)

FUNCTIONAL PARTS

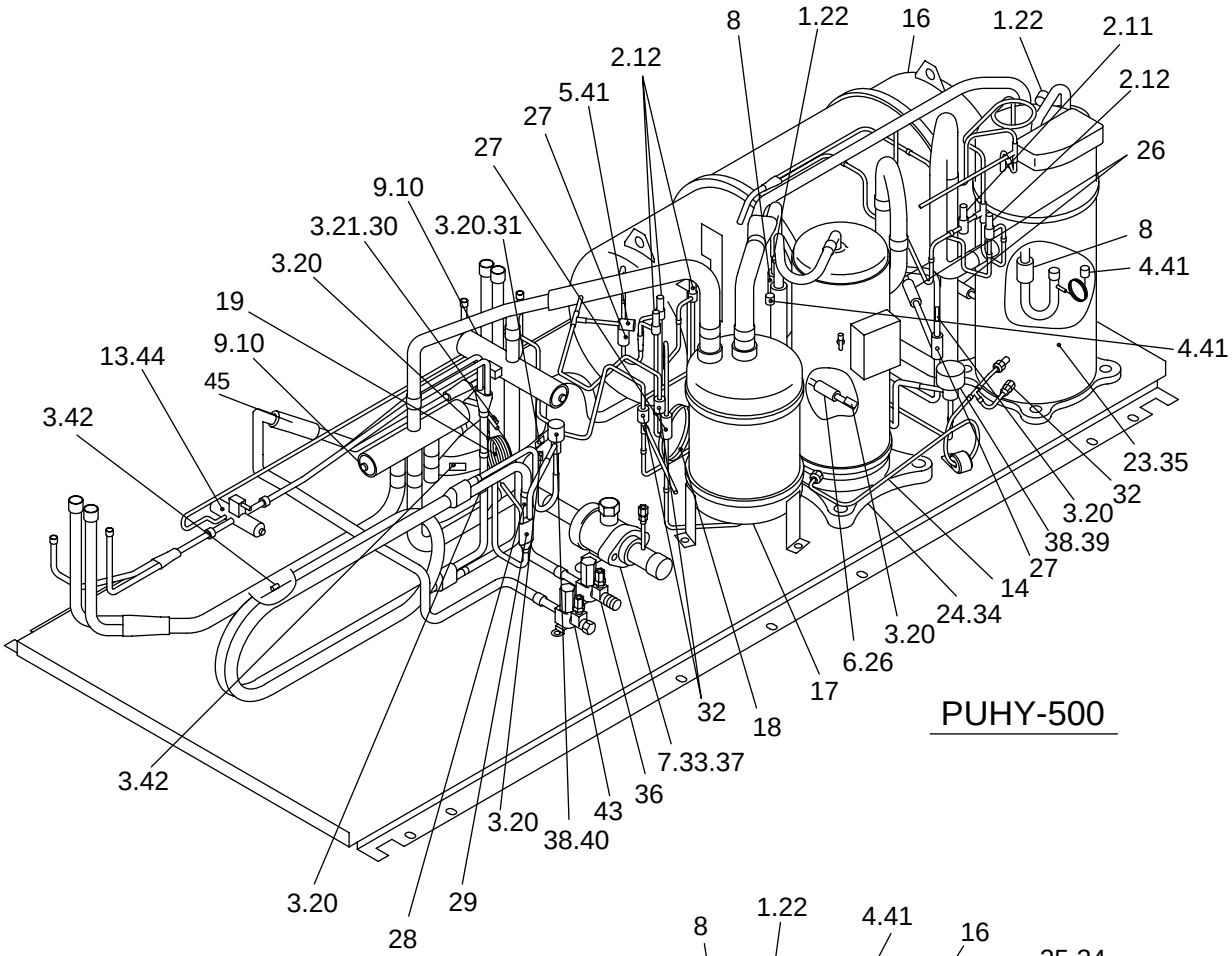

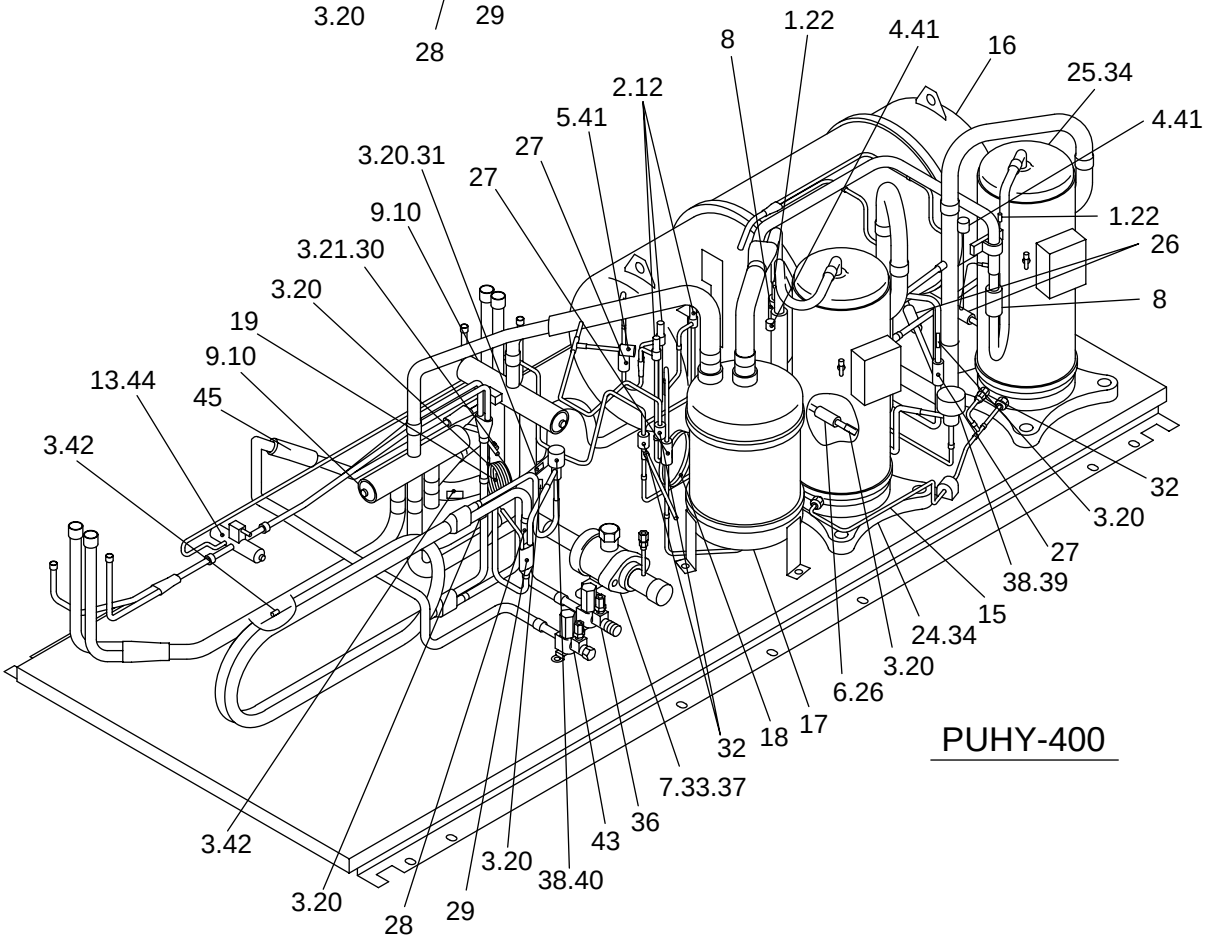

PUHY-400YMF-B(-BS)
PUHY-500YMF-B(-BS)

FUNCTIONAL PARTS

No.	Part No.	Part Name	Spec.	-400YMF-B	-500YMF-B	-400YMF-B-BS	-500YMF-B-BS			Dwg. No.	Price
1	R11 347 865	L.TH spring		2	2	2	2			U38D120H03	
2	R61 Y04 243	Solenoid valve coil	NEV 400<SV1,4,6> 500<SV1,2,3,4,6>	3	5	3	5			P631205X01	
3	R13 658 276	TH spring		9	9	9	9			C38D815H01	
4	R61 Y08 208	Pressure switch ass'y	<63H1,2>	2	2	2	2			W872429G02	
5	R61 331 288	Nut 16	<63HS>	1	1	1	1			P419110X01	
6	R61 Y04 237	Liquid level detecting heater ass'y	<CH2,3>	1	1	1	1			W872422G01	
7	R61 Y03 494	Pipe ass'y		1	1	1	1			W883580G05	
8	R61 436 418	Check valve		2	2	2	2			P639808X01	
9	R61 Y02 154	Four way valve	With a coil	2	2	2	2			W893224G01	
10	R61 Y10 242	Four way valve coil	<21S4a,21S4b>	2	2	2	2			W893225G01	
11	R61 670 232	Solenoid valve	NEV-L202DXF <SV2>		1		1			P631148X01	
12	R61 435 232	Solenoid valve	NEV-202DXF 400<SV1,4,6> 500<SV1,2,3,4,6>	3	4	3	4			P631807X02	
13	R61 E66 421	Two way valve	VR40101	1	1	1	1			P631214X02	
14	R61 G78 485	Equalizer ass'y			1		1			W633751G01	
15	R61 G74 485	Equalizer ass'y		1		1				W633750G01	
16	R61 Y12 484	Accumulator		1	1	1	1			W265797G08	
17	R61 Y03 487	Oil separator		1	1	1	1			W266568G02	
18	R61 F62 425	Capillary tube ass'y	<1.6x3.2-700>	1	1	1	1			W861175G02	
19	R61 E66 426	Capillary tube ass'y	<0.8x2.4-2000>	1	1	1	1			W861128G02	
20	R61 670 202	Thermistor	NTH3A14 <TH3~9>	7	7	7	7			P425496X01	
21	R61 F14 200	Thermistor	<TH2>	1	1	1	1			P425565X01	
22	R61 911 202	Thermistor	<TH11,12>	2	2	2	2			P425416X02	
23	R69 950 478	Scroll compressor	ZHC165YDA-J <MC2>		1		1			EP10028G04	
24	R69 951 478	Scroll compressor	HHV92FAA-YJ <MC1>	1	1	1	1			RF15144G07	
25	R69 946 478	Scroll compressor	HH101YAA-J <MC2>	1		1				EP10004G02	
26	R61 A42 454	Strainer		3	3	3	3			W882823G01	
27	R61 155 454	Strainer		3	3	3	3			W882822G01	
28	R61 Y02 454	Strainer		1	1	1	1			W858399G02	
29	R61 375 454	Strainer		1	1	1	1			W817243H06	
30	R61 A42 287	Sensor cover	EVA(6.35D)	1	1	1	1			P227170X01	
31	R61 A45 287	Sensor cover	EVA(12.7D)	1	1	1	1			P227171X01	
32	R61 800 413	Charging plug		3	3	3	3			A50U666H04	
33	R61 K50 514	Packing		1	1	1	1			W881519H01	
34	R61 Y07 237	Belt heater	240V45W <CH11,12>	2	1	2	1			P493781X01	
35	R61 Y08 237	Belt heater	240V56W <CH12>		1		1			P493782X01	
36	R61 670 410	Ball valve	5/8	1	1	1	1			P636169X01	
37	R61 K10 410	Ball valve	1Flange 10/8	1	1	1	1			P636255X01	
38	R61 G48 401	Linear expansion valve	DKV-18D124	2	2	2	2			P632342X01	
39	R61 E66 401	Linear expansion valve coil	<SLEV>	1	1	1	1			P632312X01	
40	R61 A45 401	Linear expansion valve coil	<LEV1>	1	1	1	1			P632299X01	
41	R61 E66 779	Rod holder	3771	3	3	3	3			S452002H09	
42	R61 800 202	Thermistor	NTH3A23-3 <TH10a, b>	2	2	2	2			P425494X01	
43	R61 694 410	Ball valve	1/2	1	1	1	1			P636175X01	
44	R61 Y07 242	Four way valve coil	<SV5b>	1	1	1	1			P633106X01	
45	R61 631 418	Check valve		1	1	1	1			S639001H03	

PUHY-400YMF-C(-BS,-BF,-BFA)
PUHY-500YMF-C(-BS,-BF,-BFA)

FUNCTIONAL PARTS

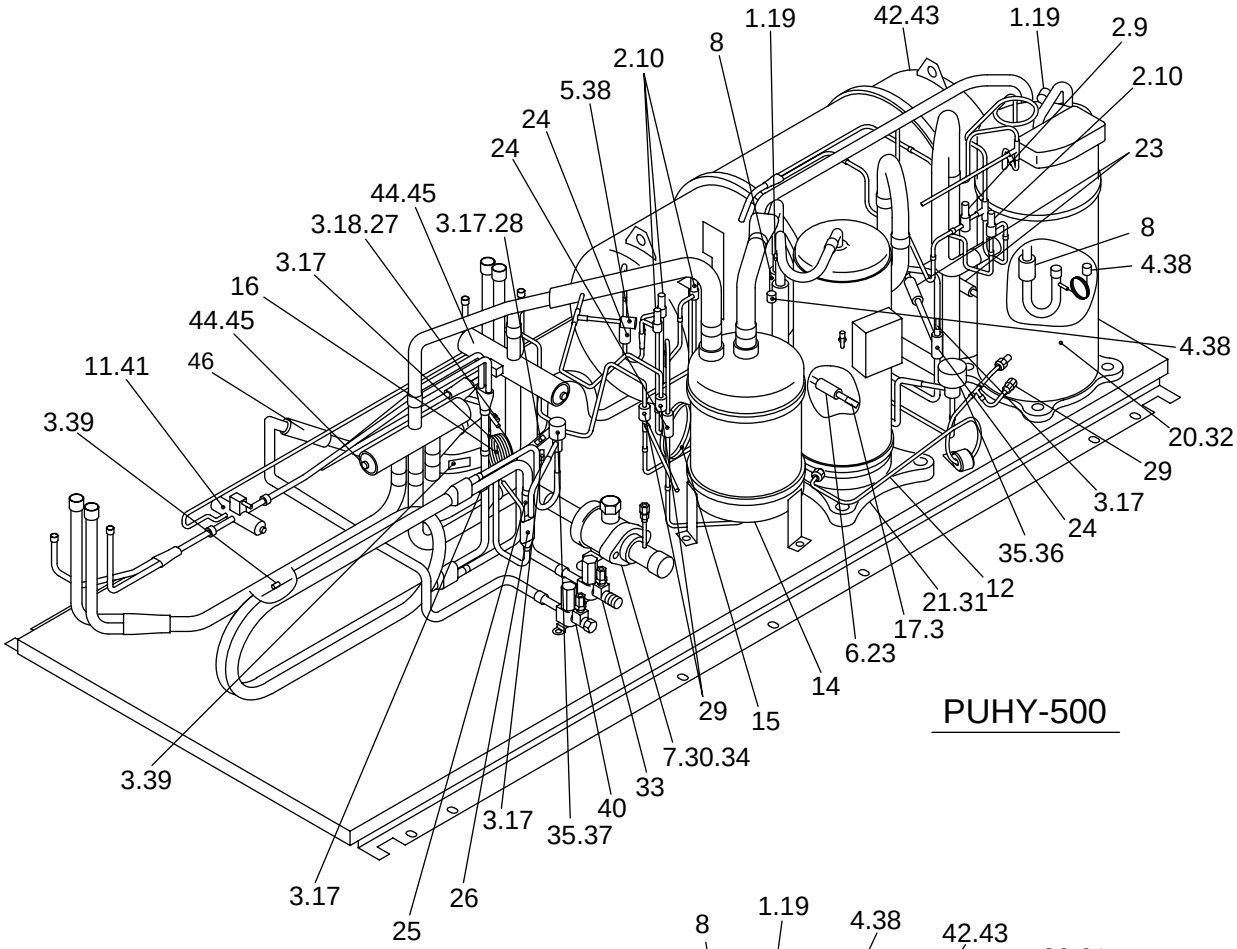

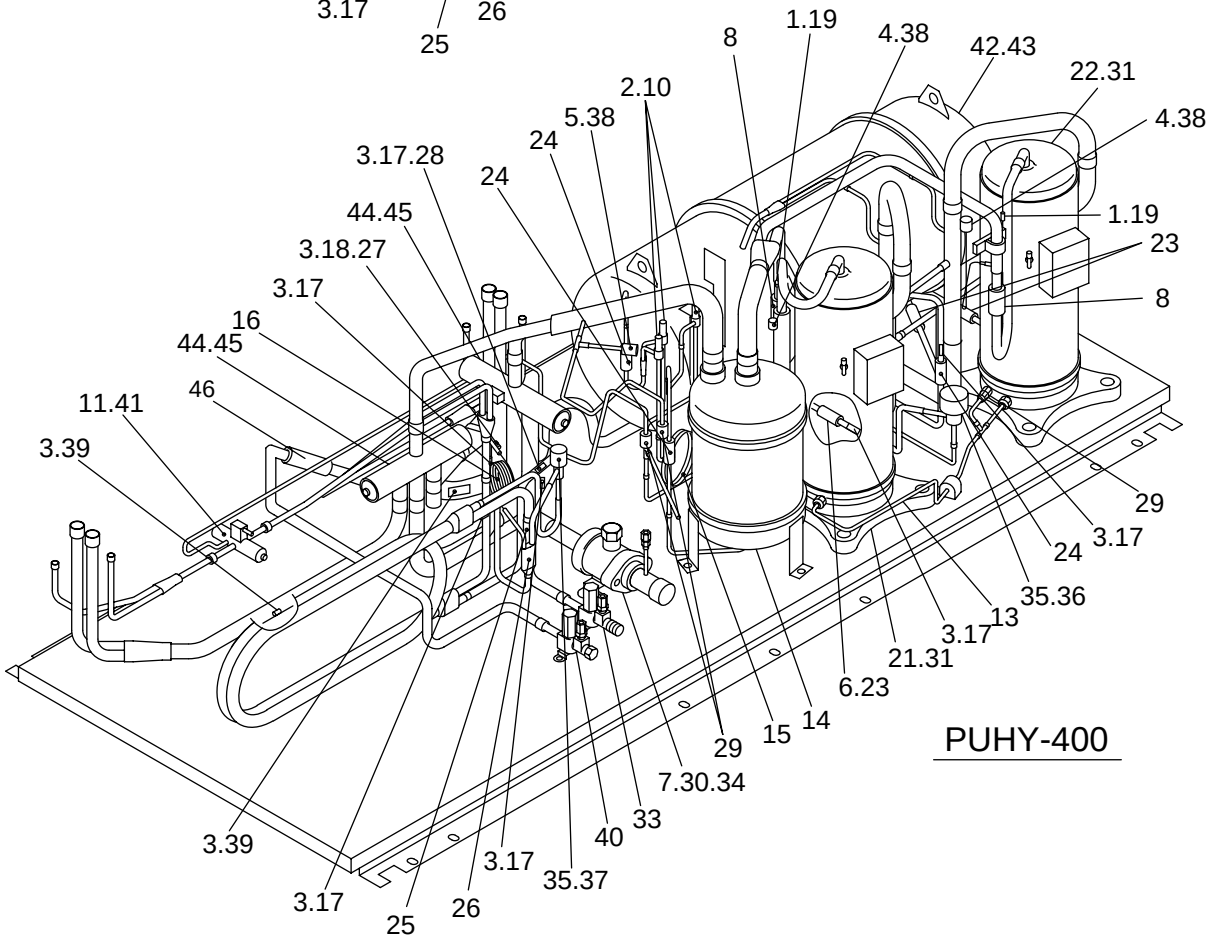

PUHY-400YMF-C(-BS,-BF,-BFA) FUNCTIONAL PARTS
PUHY-500YMF-C(-BS,-BF,-BFA)

No.	Part No.	Part Name	Spec.	-400YMF-C	-500YMF-C	-400YMF-C-BS	-500YMF-C-BS	-400YMF-C-BF	-500YMF-C-BF	-400YMF-C-BFA	-500YMF-C-BFA			Dwg. No.	Price
1	R11 347 865	L.TH spring		2	2	2	2	2	2	2	2			U38D120H03	
2	R61 Y04 243	Solenoid valve coil	NEV 400<SV1,4,6> 500<SV1,2,3,4,6>	3	5	3	5	3	5	3	5			P631205X01	
3	R13 658 276	TH spring		9	9	9	9	9	9	9	9			C38D815H01	
4	R61 Y08 208	Pressure switch ass'y	<63H1,2>	2	2	2	2	2	2	2	2			W872429G02	
5	R61 331 288	Nut 16	<63HS>	1	1	1	1	1	1	1	1			P419110X01	
6	R61 Y04 237	Liquid level detecting heater ass'y	<CH2,3>	1	1	1	1	1	1	1	1			W872422G01	
7	R61 Y03 494	Pipe ass'y		1	1	1	1	1	1	1	1			W883580G05	
8	R61 436 418	Check valve		2	2	2	2	2	2	2	2			P639808X01	
9	R61 670 232	Solenoid valve	NEV-L202DXF<SV2>		1		1		1		1			P631148X01	
10	R61 435 232	Solenoid valve	NEV-202DXF 400<SV1,4,6> 500<SV1,3,4,6>	3	4	3	4	3	4	3	4			P631807X02	
11	R61 E66 421	Two way valve	VR40101	1	1	1	1	1	1	1	1			P631214X02	
12	R61 G78 485	Equalizer ass'y			1		1		1		1			W633751G01	
13	R61 G74 485	Equalizer ass'y		1		1		1		1				W633750G01	
14	R61 Y03 487	Oil separator		1	1	1	1	1	1	1	1			W266568G02	
15	R61 F62 425	Capillary tube ass'y	<1.6X3.2-700>	1	1	1	1	1	1	1	1			W861175G02	
16	R61 E66 426	Capillary tube ass'y	<0.8X2.4-2000>	1	1	1	1	1	1	1	1			W861128G02	
17	R61 670 202	Thermistor	NTH3A14<TH3~9>	7	7	7	7	7	7	7	7			P425496X01	
18	R61 F14 200	Thermistor	<TH2>	1	1	1	1	1	1	1	1			P425565X01	
19	R61 911 202	Thermistor	<TH11,12>	2	2	2	2	2	2	2	2			P425416X02	
20	R69 950 478	Scroll compressor	ZHC165YDA-J<MC2>		1		1		1		1			EP10028G04	
21	R69 951 478	Scroll compressor	HHV92FAA-YJ<MC1>	1	1	1	1	1	1	1	1			RF15144G07	
22	R69 946 478	Scroll compressor	HH101YAA-J<MC2>	1		1		1		1				EP10004G02	
23	R61 A42 454	Strainer		3	3	3	3	3	3	3	3			W882823G01	
24	R61 155 454	Strainer		3	3	3	3	3	3	3	3			W882822G01	
25	R61 Y02 454	Strainer		1	1	1	1	1	1	1	1			W858399G02	
26	R61 375 454	Strainer		1	1	1	1	1	1	1	1			W817243H06	
27	R61 A42 287	Sensor cover	EVA(6.35D)	1	1	1	1	1	1	1	1			P227170X01	
28	R61 A45 287	Sensor cover	EVA(12.7D)	1	1	1	1	1	1	1	1			P227171X01	
29	R61 800 413	Charging plug		3	3	3	3	3	3	3	3			A50U666H04	
30	R61 K50 514	Packing		1	1	1	1	1	1	1	1			W881519H01	
31	R61 Y07 237	Belt heater	240V45W<CH11,12>	2	1	2	1	2	1	2	1			P493781X01	
32	R61 Y08 237	Belt heater	240V56W<CH12>		1		1		1		1			P493782X01	
33	R61 670 410	Ball valve	5/8	1	1	1	1	1	1	1	1			P636169X01	
34	R61 K10 410	Ball valve	1Flange 10/8	1	1	1	1	1	1	1	1			P636255X01	
35	R61 G48 401	Linear expansion valve	DKV-18D124	2	2	2	2	2	2	2	2			P632342X01	
36	R61 E66 401	Linear expansion valve coil	<SLEV>	1	1	1	1	1	1	1	1			P632312X01	
37	R61 A45 401	Linear expansion valve coil	<LEV1>	1	1	1	1	1	1	1	1			P632299X01	
38	R61 E66 779	Rod holder	3771	3	3	3	3	3	3	3	3			S452002H09	
39	R61 800 202	Thermistor	NTH3A23-3<TH10a,b>	2	2	2	2	2	2	2	2			P425494X01	
40	R61 694 410	Ball valve	1/2	1	1	1	1	1	1	1	1			P636175X01	
41	R61 Y07 242	Four way valve coil	<SV5b>	1	1	1	1	1	1	1	1			P633106X01	
42	R61 Y35 484	Accumulator		1	1	1	1			1	1			W271344G08	
43	R61 Y29 484	Accumulator						1	1					W650658G03	
44	R61 E37 154	Four way valve		2	2	2	2	2	2	2	2			P633101X01	
45	R61 Y03 242	Four way valve coil	<21S4a,21S4b>	2	2	2	2	2	2	2	2			P633078X01	
46	R61 631 418	Check valve		1	1	1	1	1	1	1	1			S639001H03	

PUHY-400YMF-B(-BS)
PUHY-500YMF-B(-BS)

CONTROL BOX PARTS

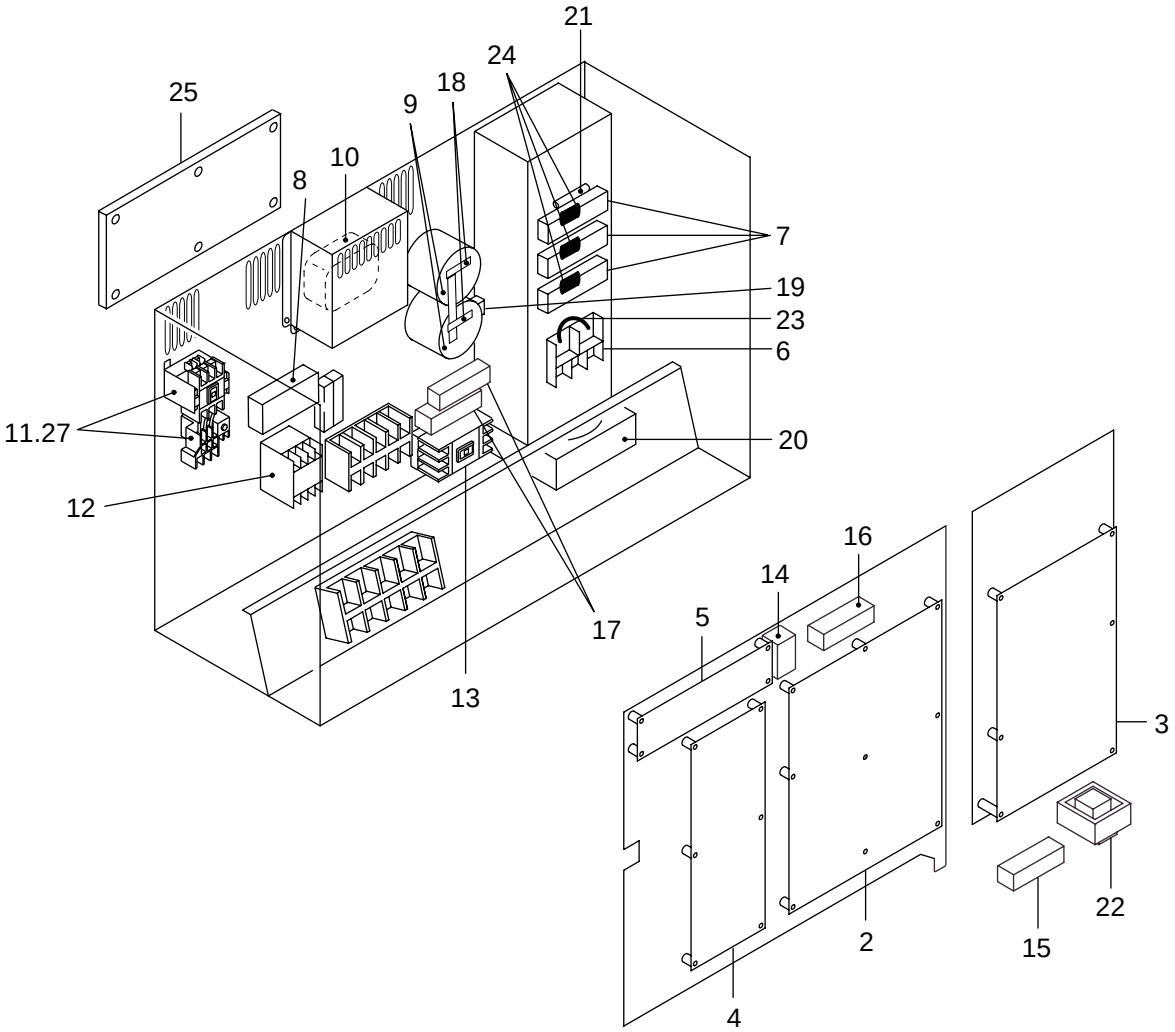

※1:It may be needed to process the hole for attaching parts into the metal plate of Control box.

PUHY-400YMF-B(-BS)
PUHY-500YMF-B(-BS)

CONTROL BOX PARTS

	No.	Part No.	Part Name	Spec.	-400YMF-B	-500YMF-B	-400YMF-B-BS	-400YMF-B-BS			Dwg. No.	Price
	1	R61 Y14 321	Inverter 500YMFB	Control box ass'y		1		1			W126750G02	
	2	R61 Y59 280	Main board	(P) superY	1	1	1	1			W266235G06	
	3	R61 Y51 280	INV board		1	1	1	1			W629573G01	
	4	R61 Y47 280	FANCON board		1	1	1	1			W629556G01	
	5	R61 Y60 280	Nut 16		1	1	1	1			W629574G02	
	6	R61 Y05 320	Diode	6R175G-160	1	1	1	1			P414109X01	
	7	R61 Y13 320	Transistor	2D175M-120	3	3	3	3			W848413G08	
	8	R61 Y07 320	Thyristor	PFB15AA120	1	1	1	1			S414032H01	
	9	R61 Y17 252	Condenser	400WV 3300uF	2	2	2	2			P412248X01	
※1	10	R61 Y01 259	Reactor	1.92mH/34A	1	1	1	1			P419149X01	
	11	R61 Y31 225	Magnetic starter	PAK-35JT-F(AC240V 27A)		1		1			S427021H63	
	12	R61 Y29 225	Magnet contactor	PAK-11J	1	1	1	1			S427020H15	
	13	R61 Y19 225	Magnet contactor	S-N18 AC230V	1	1	1	1			S427017H31	
	14	R61 Y14 260	Transformer	240V/40V	1	1	1	1			P715302X01	
	15	R61 670 234	Resistor	30W 22Ω	1	1	1	1			P411113X01	
	16	R61 E69 234	Resistor	40W 110Ω	1	1	1	1			P411131X01	
	17	R61 Y05 234	Resistor	40W 5kΩ	2	2	2	2			P411133X01	
	18	R61 Y02 234	Resistor	10W 33kΩ pitch=32	2	2	2	2			P411126X01	
	19	R61 A42 289	DCCT	HC-TN131V42XP12F	1	1	1	1			P419079X02	
	20	R61 Y02 300	Fan	109S025UL	1	1	1	1			P712360X01	
	21	R61 M54 201	Thermistor	181-503-97146	1	1	1	1			P414102X01	
	22	R61 Y02 244	Choke coil	1A 30mH	1	1	1	1			P419121X01	
	23	R61 L85 252	ZNR+C		1	1	1	1			W886345G01	
	24	R61 Y11 252	Condenser		3	3	3	3			W889943G01	
	25	R61 Y05 293	Noise filter	VF4030C-MX2	1	1	1	1			W638330G01	
	26	R61 Y15 321	Inverter 400YMFB	Control box ass'y	1		1				W126750G01	
	27	R61 Y30 225	Magnetic starter	PAK-35JT-F(AC240V 17.5A)	1		1				S427021H62	

PUHY-400YMF-C(-BS,-BF,-BFA)
PUHY-500YMF-C(-BS,-BF,-BFA)

CONTROL BOX PARTS

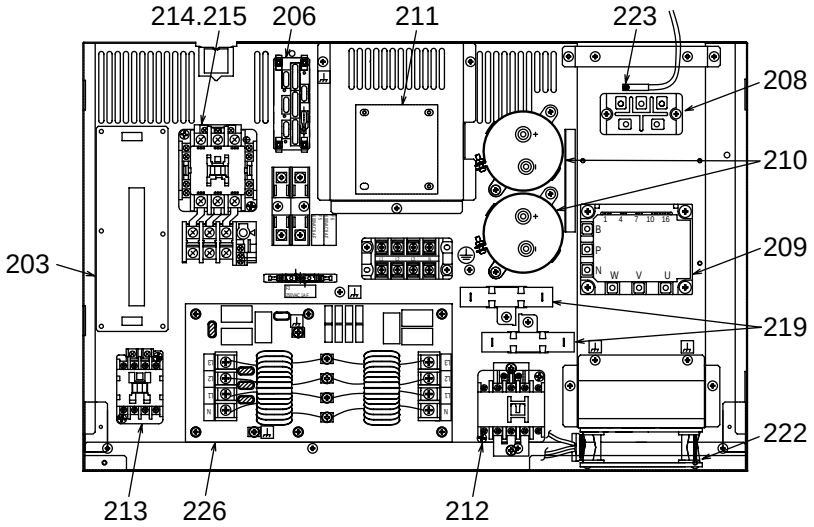

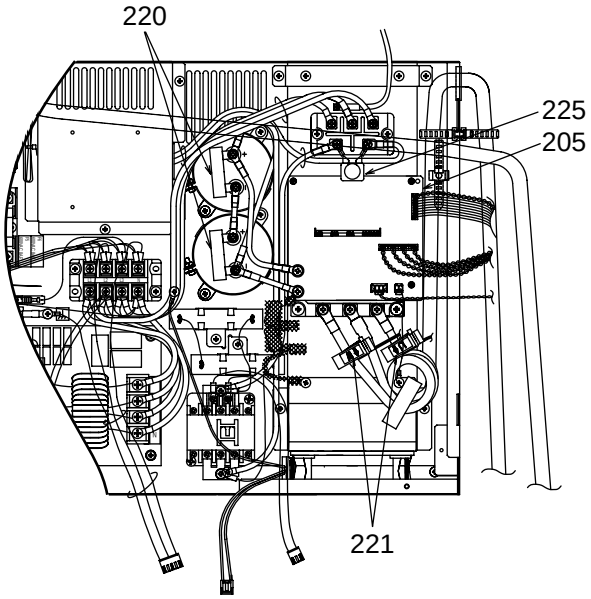

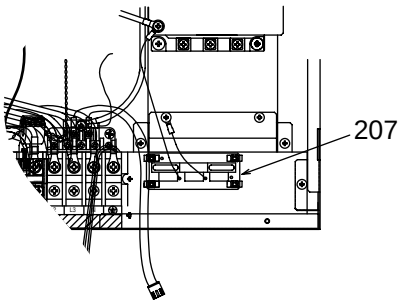

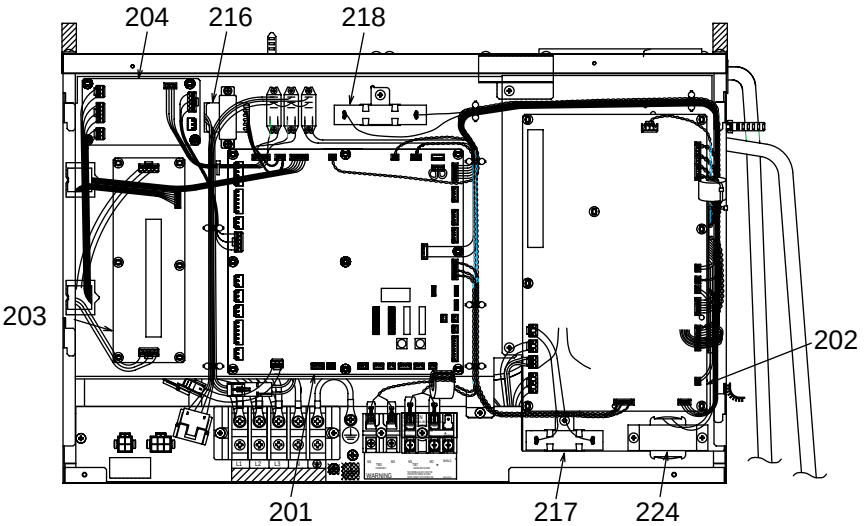

PUHY-400YMF-C(-BS,-BF,-BFA)
PUHY-500YMF-C(-BS,-BF,-BFA)

CONTROL BOX PARTS

No.	Part No.	Part Name	Spec.	-400YMF-C	-500YMF-C	-400YMF-C-BS	-500YMF-C-BS	-400YMF-C-BF	-500YMF-C-BF	-400YMF-C-BFA	-500YMF-C-BFA			Dwg. No.	Price
201	R61 Y98 280	Main board		1	1	1	1	1	1	1	1			W266235G28	
202	R61 Y67 280	INV board		1	1	1	1	1	1	1	1			W639915G01	
203	R61 Y01 251	Fan controller board		2	2	2	2	2	2	2	2			W639913G02	
204	R61 Y60 280	Ralay board		1	1	1	1	1	1	1	1			W629574G02	
205	R61 Y66 280	Nut 16		1	1	1	1	1	1	1	1			W639914G01	
206	R61 Y20 281	SNB board		1	1	1	1	1	1	1	1			W629557G03	
207	R61 Y85 280	Y-C board		1	1	1	1	1	1	1	1			W629557G04	
208	R61 Y09 320	Diode	DF60LB160	1	1	1	1	1	1	1	1			S414032H06	
209	R61 Y03 249	IPM	6MBP50RA120	1	1	1	1	1	1	1	1			W848413G04	
210	R61 Y18 252	Capacitor	40WV,4700uF<2,3>	2	2	2	2	2	2	2	2			P412265X01	
211	R61 Y01 259	Reactor	1.92mH/34A<DCL>	1	1	1	1	1	1	1	1			P419149X01	
212	R61 Y28 225	Magnet contactor	PAK-21J	1	1	1	1	1	1	1	1			S427020H12	
213	R61 Y29 225	Magnet contactor	PAK-11J	1	1	1	1	1	1	1	1			S427020H15	
214	R61 Y30 225	Magnetic starter	PAK-35JT-F 240V 17.5A	1		1		1		1				S427021H62	
215	R61 Y31 225	Magnetic starter	PAK-35JT-F 240V 27A		1		1		1		1			S427021H63	
216	R61 Y14 260	Transformer	240V/40V<T1>	1	1	1	1	1	1	1	1			P715302X01	
217	R61 670 234	Resistor	30W,22Ω<R7>	1	1	1	1	1	1	1	1			P411113X01	
218	R61 E69 234	Resistor	40W,110Ω<R6>	1	1	1	1	1	1	1	1			P411131X01	
219	R61 Y05 234	Resistor	40W,5kΩ<R1,5>	2	2	2	2	2	2	2	2			P411133X01	
220	R61 Y02 234	Resistor	10W.33kΩ,pitch=32<R2,3>	2	2	2	2	2	2	2	2			P411126X01	
221	R61 Y05 249	ACCT	DJ-6	1	1	1	1	1	1	1	1			P419169X01	
222	R61 Y15 118	Fan	109S25UL	1	1	1	1	1	1	1	1			W639916G01	
223	R61 M54 201	Thermistor	181-503-97146	1	1	1	1	1	1	1	1			P414102X01	
224	R61 399 244	Choke coil	1A,30mH	1	1	1	1	1	1	1	1			P419072X01	
225	R61 Y20 252	ZNR+C		1	1	1	1	1	1	1	1			W893546G01	
226	R61 Y09 293	NF VF4030C-MX2		1	1	1	1	1	1	1	1			W893513G01	

PUHY-400YMF-B(-BS)
PUHY-500YMF-B(-BS)

BLOWER PARTS

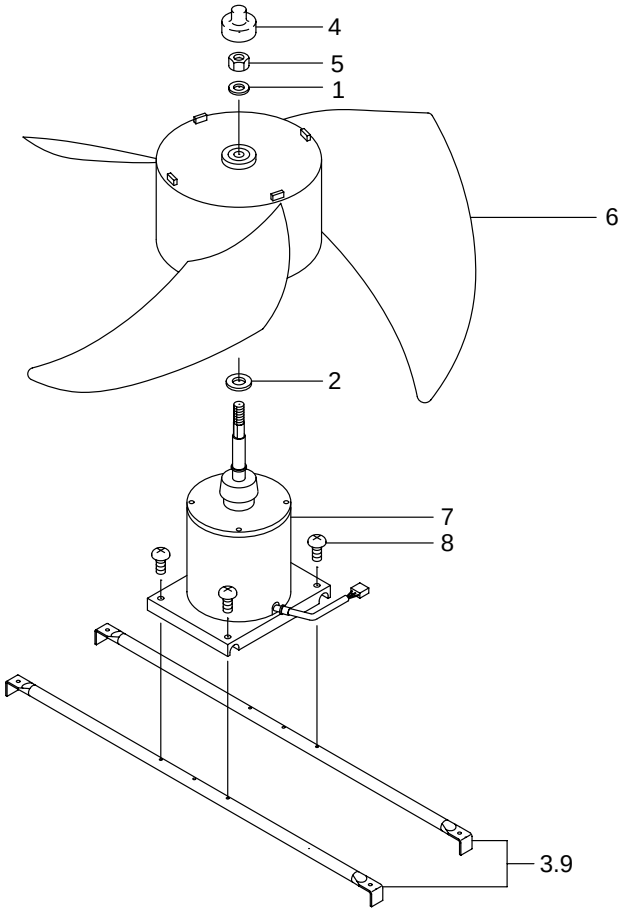

No.	Part No.	Part Name	Spec.	-400YMF-B	-500YMF-B	-400YMF-B-BS	-500YMF-B-BS			Dwg. No.	Price
1	R61 A42 136	Washer	17x32	2	2	2	2			P562006X01	
2	R61 A45 136	Washer	20.5x40	2	2	2	2			P562007X01	
3	R61 A42 140	Fan stand		4	4					W856127G05	
4	R61 A69 086	Cap		2	2	2	2			P221056X01	
5	R61 A42 122	Nut 16		2	2	2	2			P541016X01	
6	R61 E66 115	Propeller fan	750D	2	2	2	2			W872619G01	
7	R61 Y84 220	Motor	<MF2,3>	2	2	2	2			P714535X03	
8	R61 E90 087	Screw	6x14	8	8	8	8			P521020X01	
9	R61 A43 140	Fan stand				4	4			W856127G06	

PUHY-400YMF-C(-BS,-BF,-BFA)
PUHY-500YMF-C(-BS,-BF,-BFA)

BLOWER PARTS

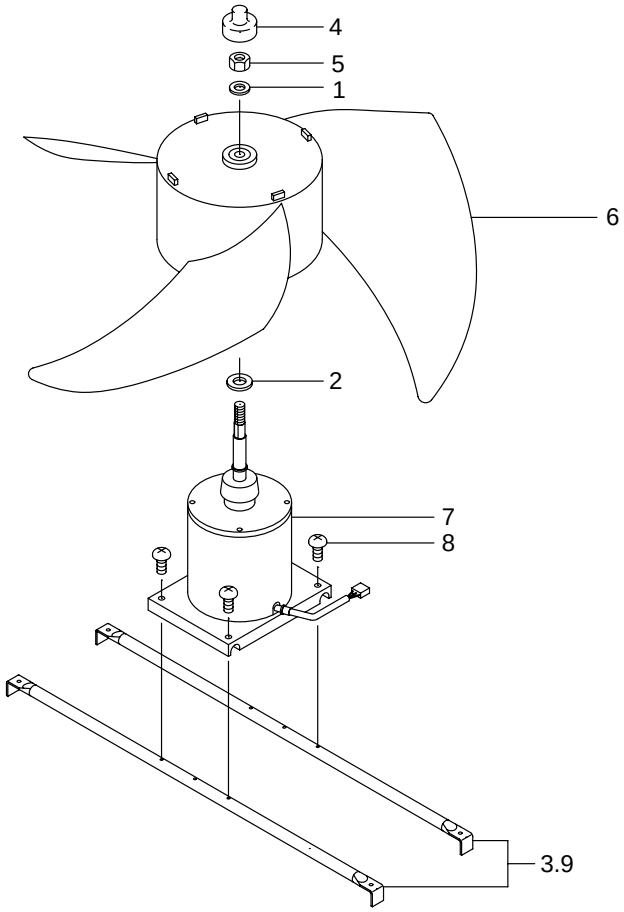

No.	Part No.	Part Name	Spec.	-400YMF-C	-500YMF-C-	-400YMF-C-BS	-500YMF-C-BS	-400YMF-C-BF	-500YMF-C-BF	-400YMF-C-BFA	-500YMF-C-BFA			Dwg. No.	Price
1	R61 A42 136	Washer	17x2	2	2	2	2	2	2	2	2			P562006X01	
2	R61 A45 136	Washer	20.5x40	2	2	2	2	2	2	2	2			P562007X01	
3	R61 A42 140	Fan stand		4	4			4	4	4	4			W856127G05	
4	R61 A69 086	Cap		2	2	2	2	2	2	2	2			P221056X01	
5	R61 A42 122	Nut 16		2	2	2	2	2	2	2	2			P541016X01	
6	R61 E66 115	Propeller fan		2	2	2	2	2	2	2	2			W872619G01	
7	R61 Y33 221	Motor	750D	2	2	2	2	2	2	2	2			P714762X01	
8	R61 E90 087	Screw	<MF2,3>	8	8	8	8	8	8	8	8			P521020X01	
9	R61 A43 140	Fan stand	6x14			4	4							W856127G06	

MITSUBISHI ELECTRIC CORPORATION
HEAD OFFICE: MITSUBISHI DENKI BLDG. , 2-2-3, MARUNOUCHI, CHIYODA-KU, TOKYO 100-8310, JAPAN

BWE0307Z(20030331)