CITY MULTI™

LOSSNAY

LGH-RX4-E

LGH-RX4-E	V-A
1. DIMENSIONS	V-A-2
2. PERFORMANCES	V-A-3
3. SPECIFICATIONS	V-A-4
4. SAMPLE INSTALLATIONS	V-A-7
5. ELECTRICAL INSTALLATIONS	V-A-8
6. WIRING DIAGRAMS	V-A-9

LOSSNAY is a perfect combination of heat recovery and ventilation, which is a leading edge product in the ventilation and air-conditioning field.

The LOSSNAY core is a special preserved paper made cross-flow and plate-fin structure, which is referable below.

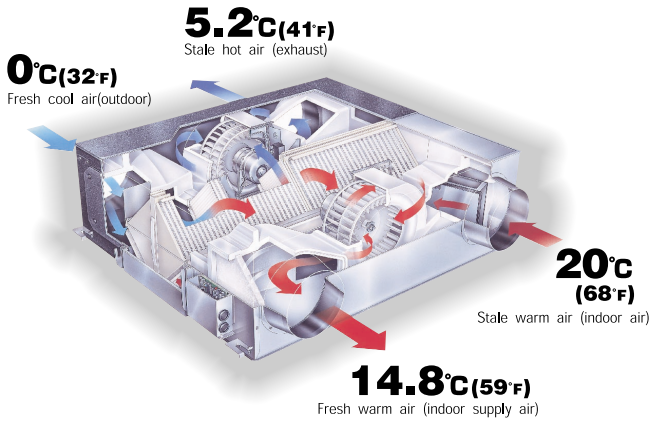

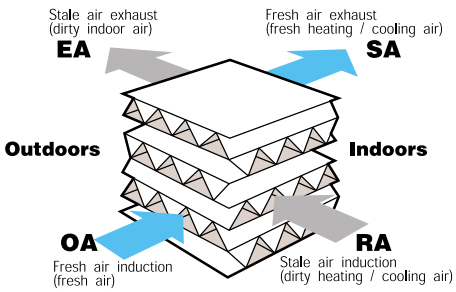

CITY MULTI™ can combine LOSSNAY into the air conditioning system, performing the best solution to ventilation and air-conditioning.

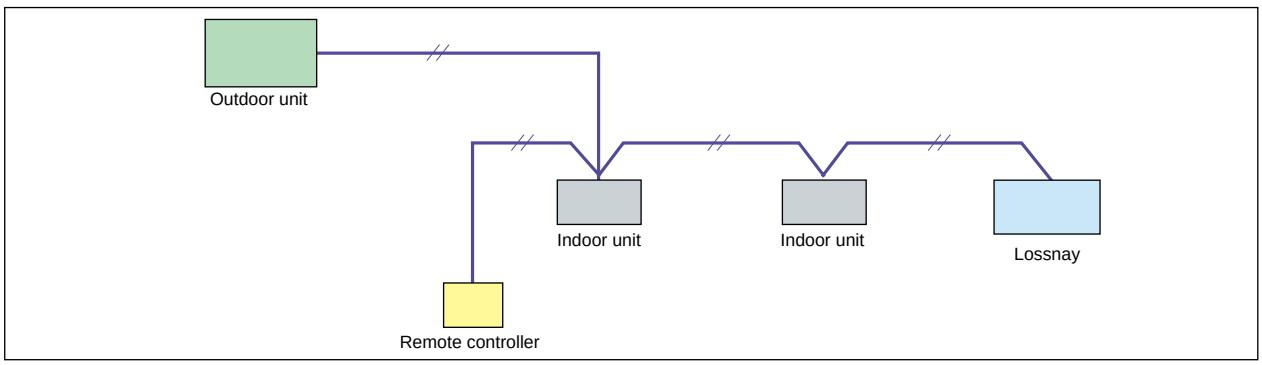

Line up of LOSSNAY units

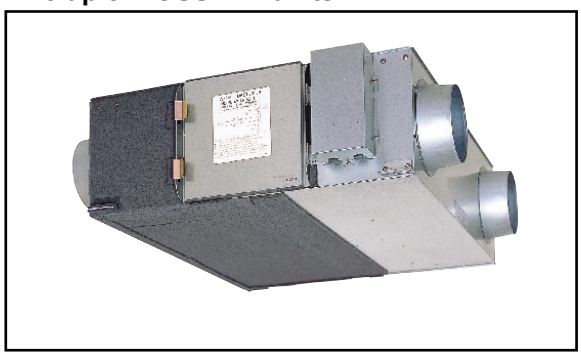

LGH-15RX4-E	150m³/h	1-phase 220-240V, 50/60Hz
LGH-25RX4-E	250m³/h	1-phase 220-240V, 50/60Hz
LGH-35RX4-E	350m³/h	1-phase 220-240V, 50/60Hz
LGH-50RX4-E	500m³/h	1-phase 220-240V, 50/60Hz
LGH-65RX4-E	650m³/h	1-phase 220-240V, 50/60Hz
LGH-80RX4-E	800m³/h	1-phase 220-240V, 50/60Hz
LGH-100RX4-E	1000m³/h	1-phase 220-240V, 50/60Hz
LGH-150RX4-E	1500m³/h	1-phase 220-240V, 50/60Hz
LGH-200RX4-E	2000m³/h	1-phase 220-240V, 50/60Hz

1. DIMENSIONS

LGH-15,25,35,50,65,80,100RX4-E

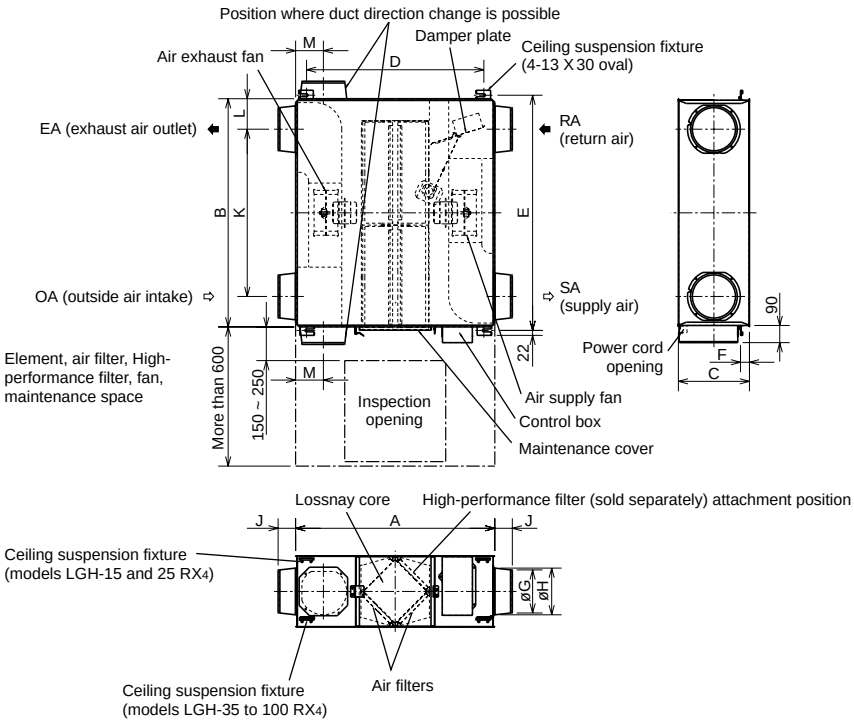

Accessory parts

- Mounting screws x18
- Duct connecting flanges x4
  (double flanges at SA and EA sides)
- Protective cover x1
  <For installing upside down>
- Slim-Lossnay connection cable
  (gray: two wires) x1

Unit (mm)

Model	Dimensions			Ceiling suspension fixture pitch			Nominal diameter	Duct connecting flange			Duct pitch			Weight (kg)
	A	B	C	D	E	F		G	H	J	K	L	M	
LGH-15 RX4	780	610	275	700	641	10*	ø100	97.5	110	54	450	80	119	17
LGH-25 RX4	780	735	275	700	765	10*	ø150	142	160	63	530	102.5	102	21
LGH-35 RX4	888	874	317	790	906	36	ø150	142	160	63	650	112	124	30
LGH-50 RX4	888	1016	317	790	1048	36	ø200	192	208	79	745	135.5	124	33
LGH-65 RX4	908	954	388	810	985	37	ø200	192	208	79	690	132	124	46
LGH-80 RX4	1164	1004	398	1030	1036	10	ø250	242	258	79	690	157	149	61
LGH-100 RX4	1164	1231	398	1030	1263	10	ø250	242	258	79	920	155.5	149	69

* Shows the distance from the ceiling.

LGH-150,200RX4-E

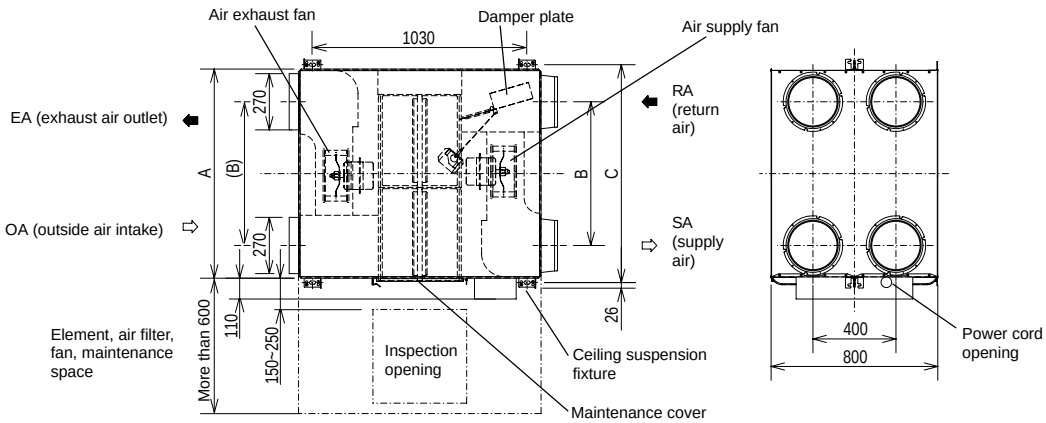

Accessory parts

- Duct connecting flanges x4
- Mounting screws x16
- Slim-Lossnay connection cable
  (gray: two wires) x1

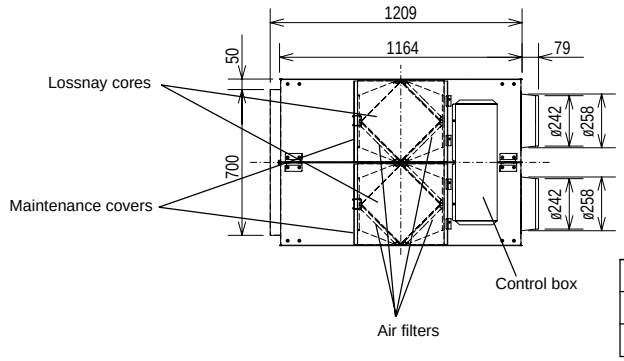

Unit (mm)

Model	A	B	C	Weight (kg)
LGH-150 RX4	1004	690	1046	124
LGH-200 RX4	1231	920	1273	140

2. PERFORMANCES

LGH-15RX4-E

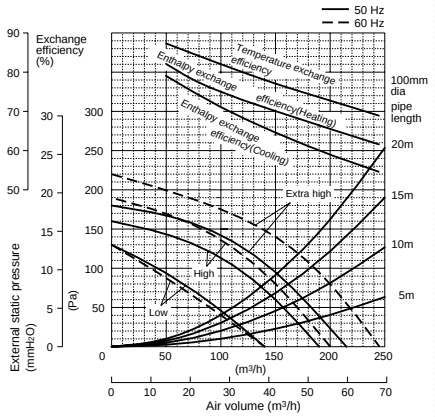

LGH-25RX4-E

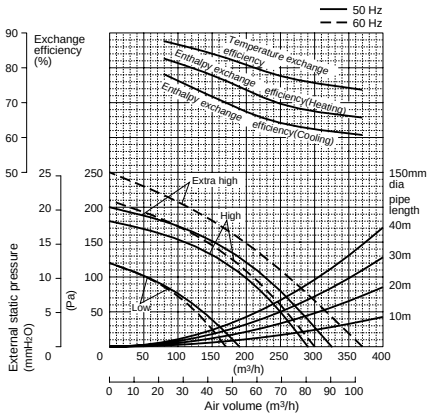

LGH-35RX4-E

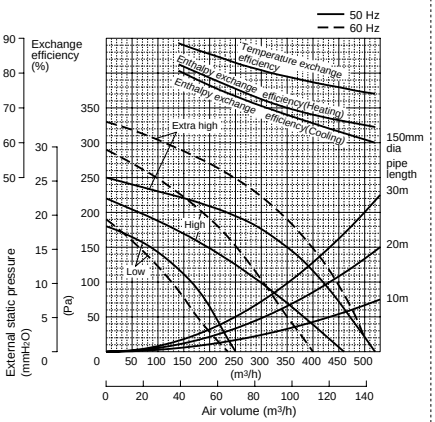

LGH-50RX4-E

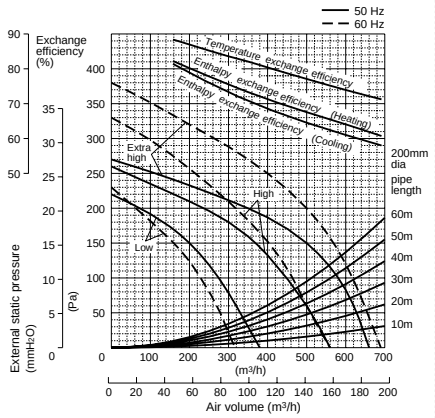

LGH-65RX4-E

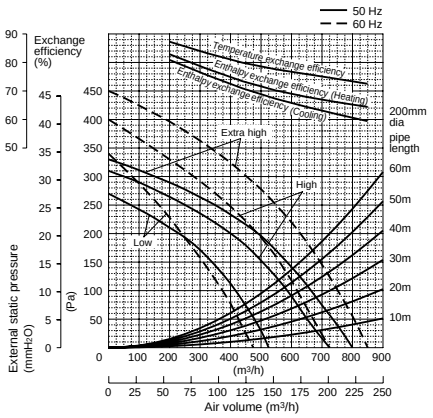

LGH-80RX4-E

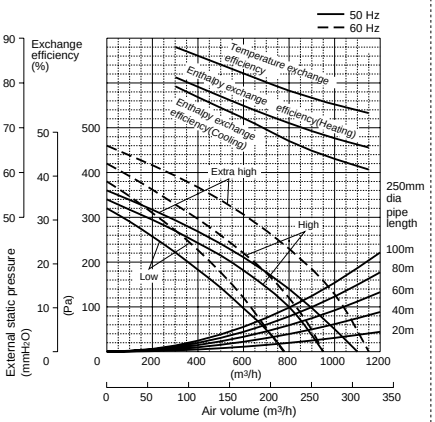

LGH-100RX4-E

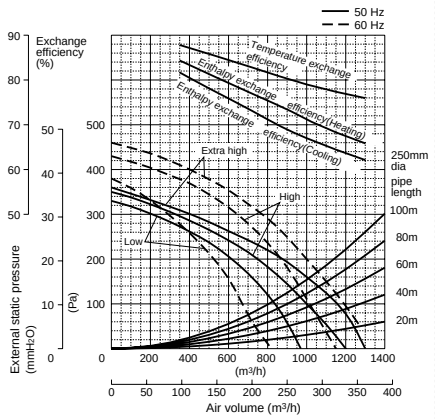

LGH-150RX4-E

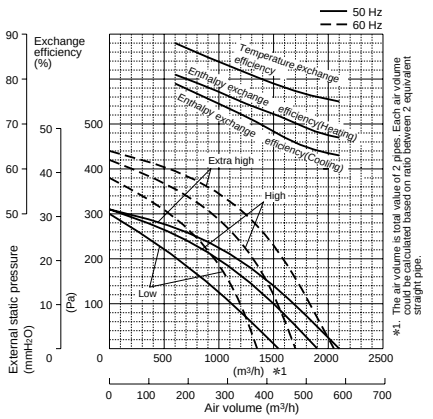

LGH-200RX4-E

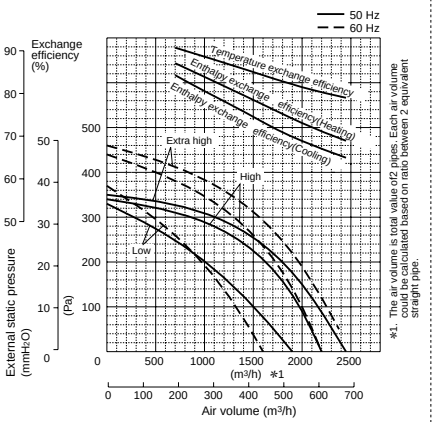

3. SPECIFICATIONS

LGH-15RX4-E

Model			LGH-15RX4-E					
Power source			1-phase 220-240V ~50/60Hz					
Ventilation mode			Lossnay ventilation			Bypass ventilation		
Fan speed			Extra High	High	Low	Extra High	High	Low
Current		(A)	0.42-0.45/0.49-0.51	0.29-0.31/0.33-0.35	0.21-0.22/0.23-0.24	0.42-0.45/0.49-0.52	0.30-0.31/0.33-0.35	0.21-0.22/0.23-0.24
Power consumption		(W)	92-107/107-122	63-73/72-84	45-51/49-57	92-107/107-123	64-73/72-84	45-51/49-57
Air volume		(m^3/h)	150	150	110/100	150	150	110/100
		(L/s)	42	42	31/28	42	42	31/28
External static pressure		(Pa)	95/140	60/80	35/40	95/140	60/80	35/40
		(mmH_2O)	9.7/14.3	6.1/8.2	3.6/4.1	9.7/14.3	6.1/8.2	3.6/4.1
Temperature recovery efficiency		(%)	77	77	81/82	-	-	-
Enthalpy recovery efficiency	Heating	(%)	70	70	74/75	-	-	-
	Cooling	(%)	64.5	64.5	70/71	-	-	-
Noise	*1	(dB)	26-27/28-29	24-25/25-26	22-23/22-23	26-27/28-29	24-25/25.5-26.5	22-23/22-23
Weight			17kg					
Starting current			Under 0.7/0.7A or less					

LGH-25RX4-E

Model			LGH-25RX4-E					
Power source			1-phase 220-240V ~50/60Hz					
Ventilation mode			Lossnay ventilation			Bypass ventilation		
Fan speed			Extra High	High	Low	Extra High	High	Low
Current		(A)	0.47-0.49/0.55-0.58	0.39-0.40/0.45-0.47	0.24-0.25/0.26-0.27	0.47-0.49/0.55-0.58	0.39-0.40/0.45-0.47	0.24-0.25/0.26-0.27
Power consumption		(W)	103-117/121-139	85-96/98-112	52-59/56-64	103-117/121-139	85-96/98-112	52-59/56-64
Air volume		(m^3/h)	250	250	165/150	250	250	165/150
		(L/s)	69	69	46/42	69	69	46/42
External static pressure		(Pa)	80/110	50/60	25/25	80/110	50/60	25/25
		(mmH_2O)	8.2/11.2	5.1/6.1	2.5/2.5	8.2/11.2	5.1/6.1	2.5/2.5
Temperature recovery efficiency		(%)	78	78	83.5/84.5	-	-	-
Enthalpy recovery efficiency	Heating	(%)	70	70	77/78	-	-	-
	Cooling	(%)	65	65	71/72	-	-	-
Noise	*1	(dB)	26.5-27.5/28.5-29.5	25-26/25.5-26.5	22-23/22-23	27-28/29-30	25.5-26.5/26-27	22-23/22-23
Weight			21kg					
Starting current			Under 0.8/0.8A or less					

LGH-35RX4-E

Model			LGH-35RX4-E					
Power source			1-phase 220-240V ~50/60Hz					
Ventilation mode			Lossnay ventilation			Bypass ventilation		
Fan speed			Extra High	High	Low	Extra High	High	Low
Current		(A)	0.78-0.79/0.99-0.99	0.71-0.71/0.83-0.87	0.46-0.48/0.46-0.50	0.81-0.82/1.00-1.00	0.72-0.73/0.83-0.86	0.46-0.49/0.46-0.50
Power consumption		(W)	169-187/215-236	154-167/180-207	97-110/97-117	176-192/217-236	156-172/180-206	97-111/97-117
Air volume		(m^3/h)	350	350	230/210	350	350	230/210
		(L/s)	97	97	64/58	97	97	64/58
External static pressure		(Pa)	150/190	70/50	25/20	150/190	70/50	25/20
		(mmH_2O)	15.3/19.4	7.1/5.1	2.5/2.0	15.3/19.4	7.1/5.1	2.5/2.0
Temperature recovery efficiency		(%)	79	79	84/85	-	-	-
Enthalpy recovery efficiency	Heating	(%)	70	70	77/78	-	-	-
	Cooling	(%)	68	68	74.5/76	-	-	-
Noise	*1	(dB)	31-32/32-33	28-30/27-29	23-24/21-22	31.5-32.5/33-34	28-30/28-30	23-24/21-22
Weight			30kg					
Starting current			Under 1.7/1.7A or less					

LGH-50RX4-E

Model			LGH-50RX4-E					
Power source			1-phase 220-240V ~50/60Hz					
Ventilation mode			Lossnay ventilation			Bypass ventilation		
Fan speed			Extra High	High	Low	Extra High	High	Low
Current		(A)	0.94-0.95/1.21-1.27	0.89-0.90/1.05-1.10	0.57-0.60/0.60-0.63	0.95-0.96/1.22-1.25	0.90-0.93/1.05-1.09	0.58-0.60/0.60-0.63
Power consumption		(W)	204-225/262-291	193-214/231-262	123-142/130-151	206-228/263-288	196-221/228-261	125-142/130-151
Air volume		(m^3/h)	500	500	350/300	500	500	350/300
		(L/s)	139	139	97/83	139	139	97/83
External static pressure		(Pa)	150/200	60/60	30/20	150/200	60/60	30/20
		(mmH_2O)	15.3/20.4	6.1/6.1	3.1/2.0	15.3/20.4	6.1/6.1	3.1/2.0
Temperature recovery efficiency		(%)	77	77	82/83.5	-	-	-
Enthalpy recovery efficiency	Heating	(%)	67.5	67.5	73.5/75.5	-	-	-
	Cooling	(%)	64.5	64.5	71.5/73.5	-	-	-
Noise	*1	(dB)	33-34/33-35.5	29.5-31.5/28.5-31	23.5-24.5/23-24	34-35.5/34.5-36	31-33/30-32	24.5-25.5/23-24
Weight			33kg					
Starting current			Under 1.9/1.8A or less					

*1 Measured at 1.5m under the center of panel.

3. SPECIFICATIONS

LGH-65RX4-E

Model			LGH-65RX4-E					
Power source			1-phase 220-240V ~50/60Hz					
Ventilation mode			Lossnay ventilation			Bypass ventilation		
Fan speed			Extra High	High	Low	Extra High	High	Low
Current		(A)	1.40-1.40/1.80-1.80	1.30-1.30/1.50-1.60	0.85-0.90/0.90-1.00	1.40-1.40/1.80-1.80	1.30-1.30/1.50-1.60	0.85-0.90/0.90-1.00
Power consumption		(W)	295-325/380-430	270-300/320-370	185-210/195-230	300-330/380-430	275-305/325-375	185-210/195-230
Air volume		(m^3/h)	650	650	500/440	650	650	500/440
		(L/s)	181	181	139/122	181	181	139/122
External static pressure		(Pa)	110/185	50/70	30/35	110/185	50/70	30/35
		(mmH_2O)	11.2/18.9	5.1/7.1	3.1/3.6	11.2/18.9	5.1/7.1	3.1/3.6
Temperature recovery efficiency		(%)	76	76	79/80	-	-	-
Enthalpy recovery efficiency	Heating	(%)	68	68	71.5/73.5	-	-	-
	Cooling	(%)	64.5	64.5	69/71	-	-	-
Noise	*1	(dB)	34.5-35/35.5-36	32.5-33/32.5-33	27-28/27-28	35.5-36/36.5-37	33.5-34/33.5-34	27.5-28.5/27.5-28.5
Weight			46kg					
Starting current			Under 2.8/2.6A or less					

LGH-80RX4-E

Model			LGH-80RX4-E					
Power source			1-phase 220-240V ~50/60Hz					
Ventilation mode			Lossnay ventilation			Bypass ventilation		
Fan speed			Extra High	High	Low	Extra High	High	Low
Current		(A)	1.70-1.70/2.10-2.20	1.60-1.60/1.90-2.00	1.40-1.40/1.50-1.60	1.70-1.70/2.10-2.10	1.60-1.60/1.90-2.00	1.40-1.40/1.50-1.60
Power consumption		(W)	365-385/455-510	340-370/405-465	290-315/315-375	350-380/455-500	335-360/410-460	290-315/325-375
Air volume		(m^3/h)	800	800	670/660	800	800	670/660
		(L/s)	222	222	186/183	222	222	186/183
External static pressure		(Pa)	140/230	100/120	70/80	140/230	100/120	70/80
		(mmH_2O)	14.3/23.5	10.2/12.2	7.1/8.2	14.3/23.5	10.2/12.2	7.1/8.2
Temperature recovery efficiency		(%)	78	78	80.5/81	-	-	-
Enthalpy recovery efficiency	Heating	(%)	71	71	73.5/74	-	-	-
	Cooling	(%)	67	67	70.5/71	-	-	-
Noise	*1	(dB)	33.5-34.5/35-36	32-33/31-32.5	30-31/29-30.5	34.5-35.5/36-37	33-34/32-33.5	30.5-31.5/29.5-31
Weight			61kg					
Starting current			Under 3.6/3.3A or less					

LGH-100RX4-E

Model			LGH-100RX4-E					
Power source			1-phase 220-240V ~50/60Hz					
Ventilation mode			Lossnay ventilation			Bypass ventilation		
Fan speed			Extra High	High	Low	Extra High	High	Low
Current		(A)	2.10-2.10/2.80-2.90	2.00-2.00/2.60-2.70	1.70-1.70/2.00-2.10	2.10-2.10/2.80-2.90	2.00-2.00/2.60-2.70	1.70-1.70/2.00-2.10
Power consumption		(W)	455-490/615-680	440-475/565-635	365-400/420-485	455-590/615-680	440-475/565-635	365-400/425-490
Air volume		(m^3/h)	1000	1000	870/720	1000	1000	870/720
		(L/s)	278	278	242/200	278	278	242/200
External static pressure		(Pa)	160/200	100/110	80/60	160/200	100/110	80/60
		(mmH_2O)	16.3/20.4	10.2/11.2	8.2/6.1	16.3/20.4	10.2/11.2	8.2/6.1
Temperature recovery efficiency		(%)	79	79	81/83	-	-	-
Enthalpy recovery efficiency	Heating	(%)	71	71	74/77	-	-	-
	Cooling	(%)	67	67	69.5/73.5	-	-	-
Noise	*1	(dB)	36-37/36-38	34-35/34-36	31.5-32.5/30-32	37-38/37.5-39.5	35-36.5/35-37.5	33-34/31-33
Weight			69kg					
Starting current			Under 5.4/4.9A or less					

LGH-150RX4-E

Model			LGH-150RX4-E					
Power source			1-phase 220-240V ~50/60Hz					
Ventilation mode			Lossnay ventilation			Bypass ventilation		
Fan speed			Extra High	High	Low	Extra High	High	Low
Current		(A)	3.30-3.30/4.20-4.40	3.10-3.10/3.80-3.90	2.70-2.70/3.00-3.10	3.20-3.20/4.20-4.30	3.00-3.00/3.70-3.90	2.60-2.60/3.00-3.10
Power consumption		(W)	720-770/920-1020	670-730/820-935	575-625/650-740	700-755/910-1010	655-710/810-925	565-615/645-740
Air volume		(m^3/h)	1500	1500	1250/1230	1500	1500	1250/1230
		(L/s)	417	417	347/342	417	417	347/342
External static pressure		(Pa)	140/230	100/120	70/80	140/230	100/120	70/80
		(mmH_2O)	14.3/23.5	10.2/12.2	7.1/8.2	14.3/23.5	10.2/12.2	7.1/8.2
Temperature recovery efficiency		(%)	79	79	81.5/81.5	-	-	-
Enthalpy recovery efficiency	Heating	(%)	72	72	74.5/74.5	-	-	-
	Cooling	(%)	68	68	72/72	-	-	-
Noise	*1	(dB)	36.5-37.5/37-38	35.5-36.5/35-36	32.5-33.5/33-34	39-40/39-41	37.5-38.5/36.5-38.5	34.5-36.5/33-35
Weight			124kg					
Starting current			Under 7.2/6.6A or less					

*1 Measured at 1.5m under the center of panel.

3. SPECIFICATIONS

LGH-200RX4-E

Model			LGH-200RX4-E					
Power source			1-phase 220-240V ~50/60Hz					
Ventilation mode			Lossnay ventilation			Bypass ventilation		
Fan speed			Extra High	High	Low	Extra High	High	Low
Current		(A)	4.30-4.30/5.80-5.90	4.20-4.20/5.30-5.40.	3.50-3.50/4.00-4.10	4.30-4.30/5.80-5.90	4.20-4.20/5.30-5.50	3.50-3.50/4.00-4.20
Power consumption		(W)	945-1010/1265-1410	910-980/1155-1295	755-820/860-980	940-1010/1260-1405	915-985/1160-1300	755-825/860-990
Air volume		(m^3/h)	2000	2000	1650/1440	2000	2000	1650/1440
		(L/s)	556	556	458/400	556	556	458/400
External static pressure		(Pa)	150/190	90/100	65/60	150/190	90/100	65/60
		(mmH_2O)	15.3/19.4	9.2/10.2	6.6/6.1	15.3/19.4	9.2/10.2	6.6/6.1
Temperature recovery efficiency		(%)	79	79	81.5/83	-	-	-
Enthalpy recovery efficiency	Heating	(%)	71	71	75/77	-	-	-
	Cooling	(%)	67	67	71/73.5	-	-	-
Noise	*1	(dB)	39-40/38.5-40.5	37-38/36.5-38.5	35-36/34-35	39.5-41/39.5-42	38-39.5/37.5-40	36-37/34.5-36
Weight			140kg					
Starting current			Under 10.8/9.8A or less					

*1 Measured at 1.5m under the center of panel.

4. SAMPLE INSTALLATIONS

LGH-15,25,35,50,65,80,100RX4-E

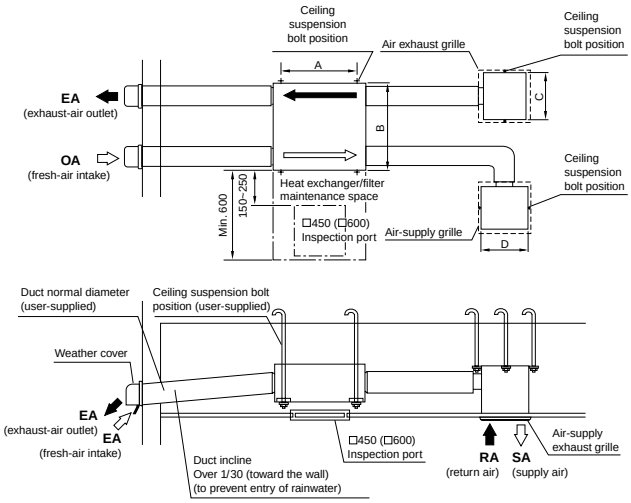

- An inspection port (□450 or □600) must be installed on the filter and Lossnay Core removing side.
- Provide heat insulation to prevent moisture condensation along the two outside ducts (fresh-air intake and exhaust-air outlet).
- Ceiling installation hardware can be attached to the top of the unit. (models LGH-35 to 100RX4-E)
- Do not use vent caps or round hoods in places directly exposed to rain.

(Unit: mm)

	A	B	C	D
LGH-15RX4-E	700	641	334	334
LGH-25RX4-E	700	765	334	334
LGH-35RX4-E	790	906	334	334
LGH-50RX4-E	790	1,048	414	414
LGH-65RX4-E	810	985	414	414
LGH-80RX4-E	1,030	1,036	414	414
LGH-100RX4-E	1,030	1,263	414	414

LGH-150,200RX4-E

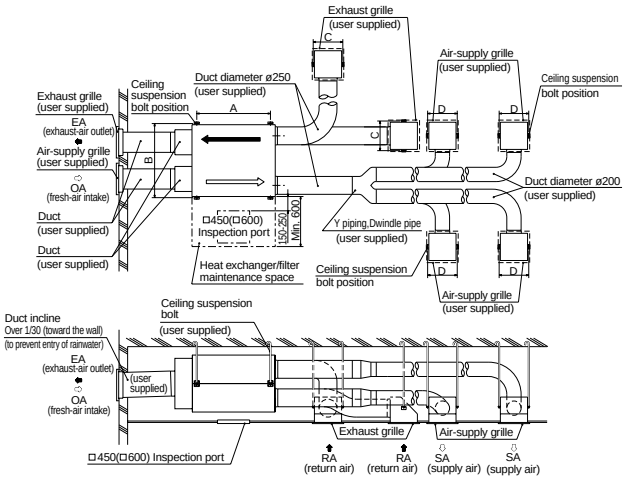

- An inspection port (□450 or □600) must be installed on the filter and Lossnay Core removing side.
- Provide heat insulation to prevent moisture condensation along the two outside ducts (fresh-air intake and exhaust-air outlet).
- Where rain falls directly on the machinery, use the weather cover to prevent entry of rainwater.

(Unit: mm)

	A	B	C	D
LGH-150RX4-E	1,030	1,046	414	414
LGH-200RX4-E	1,030	1,273	414	414

Installation conditions:
- Ambient conditions: Temperature -10°C to +40°C, relative humidity less than 80%. When condensation is expected to form, heat up the outside air using a duct heater, etc.
- Outside air intake conditions: Temperature -15°C to +40°C, relative humidity less than 80%.

5. ELECTRICAL INSTALLATIONS

With this product, the wiring installation method will vary according to the design of the system. Perform electrical installation for each of the required sections.
* Always use double insulated PVC cable for the transmission lines.

LGH-15,25,35,50,65,80,100RX4-E

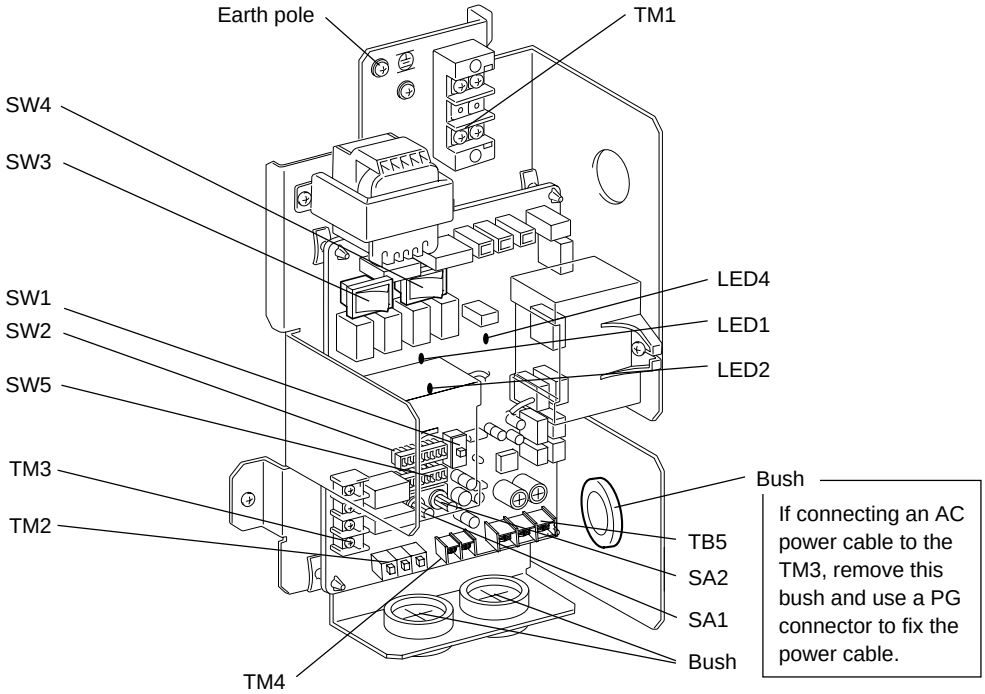

LGH-150,200RX4-E

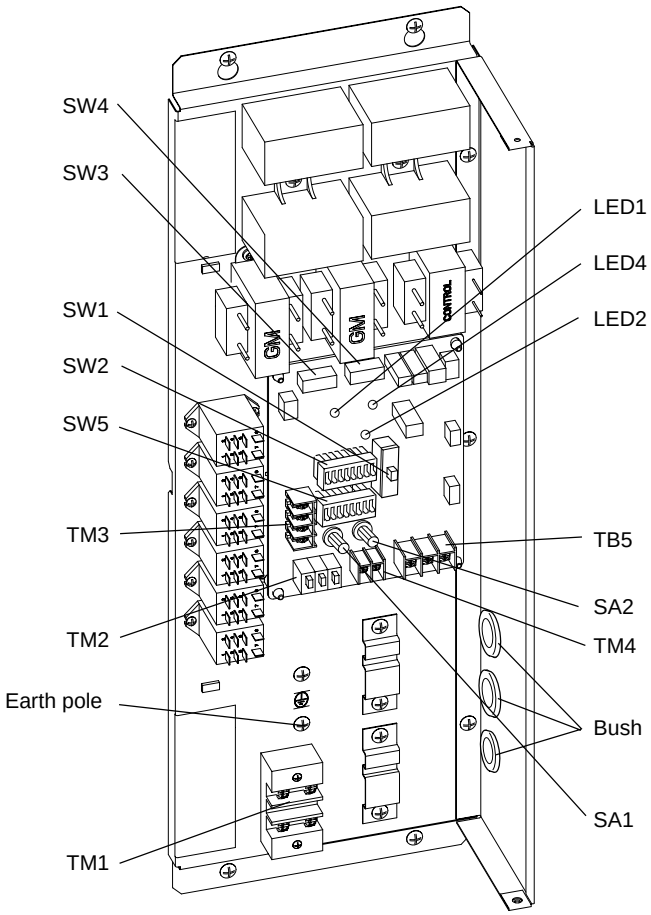

6. WIRING DIAGRAMS

LGH-15,25,35,50,65,80,100RX4-E

Drw. : IU-WIRING51

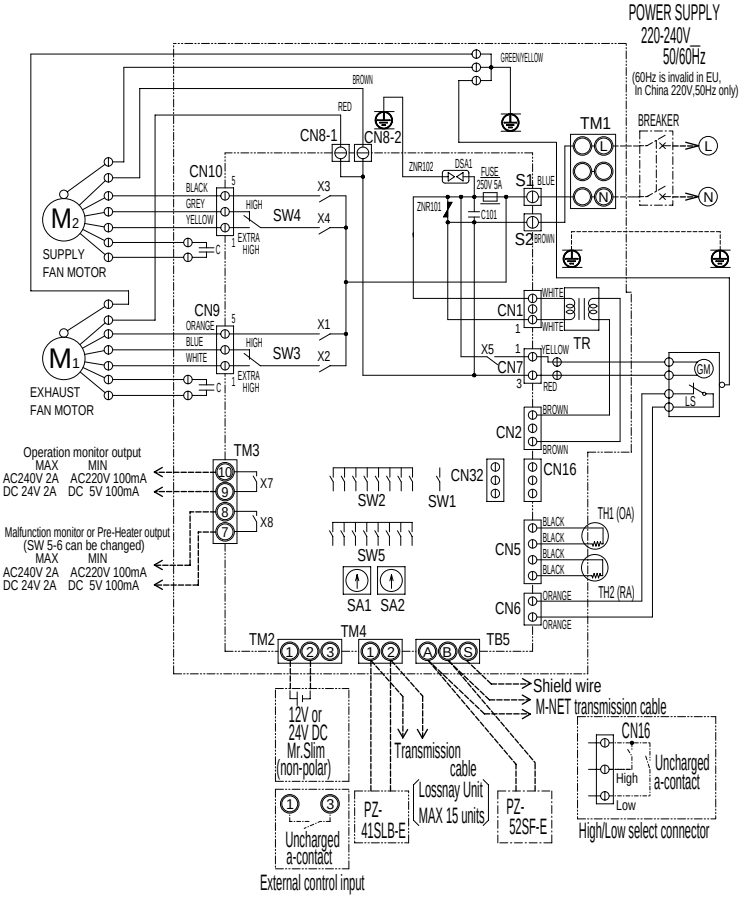

- Connect the wires shown as dotted lines.
- Be sure to connect the grounding wire.
- Breaker should be provided by the customer.
- Always use an all pole disconnection for the main switch (breaker) for the power connection.
- Always use double insulated PVC cable for the transmission lines.

LGH-150,200RX4-E

Drw. : IU-WIRING52

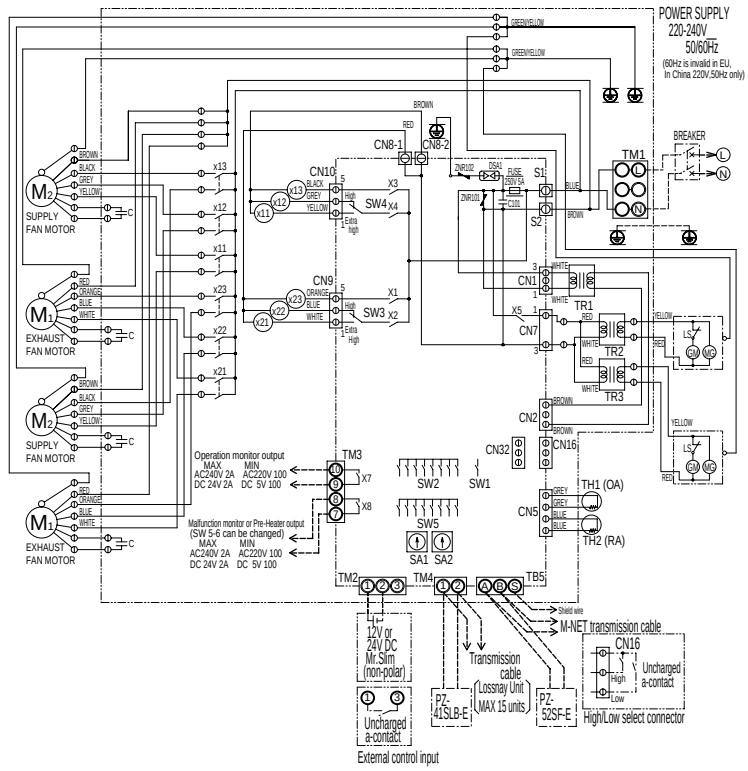

- PZ-41SLB-E and PZ-52SF-E cannot be used simultaneously.

Symbol explanation

M1:	Motor for exhaust fan
M2:	Motor for supply fan
C:	Capacitor
GM:	Motor for Bypass movement
LS:	Microswitch
TH1:	Thermistor for outside air
TH2:	Thermistor for return air
SW1:	Switch (Main/Sub change)
SW2, 5:	Switch (Function selection)
SW3:	High/E. High select switch (Exhaust fan)
SW4:	High/E. High select switch (Supply fan)
TM1:	Terminal block (Power supply)
TM2:	Terminal block (Transmission cable and external control input)
TM3:	Terminal block (Monitor output)
TB5:	Terminal block (M-NET Transmission cable)
S1, S2:	Connector (Power supply)
TR:	Control circuit transformer
X7:	Relay contact (for operation monitor output)
X8:	Relay contact (for malfunction monitor output)
CN1:	Connector (Transformer primary)
CN2:	Connector (Transformer secondary)
CN5:	Connector (Thermistor)
CN6:	Connector (Microswitch)
CN7:	Connector (Motor for bypass operation)
CN8-1:	Tab connector (Fan motor)
CN8-2:	Tab connector (Fan motor)
CN9:	Connector (Fan motor)
CN10:	Connector (Fan motor)
CN16:	Connector (High/Low switch)
CN32:	Connector (Remote control selection)
SA1:	Address setting rotary switch (10 digit)
SA2:	Address setting rotary switch (1 digit)
LED1:	Inspection indicator lamp
LED2:	Inspection indicator lamp
LED4:	Power supply indicator lamp
MARK	◎ : Indicates terminal block ⊕ : Connector ⊡ : Board insertion connector or fastening connector of control board